Lumber design values are in accordance with ANSI/TPI 1 section 6.3
These truss designs rely on lumber values established by others.

RE: 4374769 - MARTIN - SPEC HSE

MiTek, Inc.
16023 Swingley Ridge Rd.
Chesterfield, MO 63017
314.434.1200

Site Information:

Customer Info: BEN MARTIN Project Name: Spec House Model: Custom
Lot/Block: 3 Subdivision: Mayfair
Address: TBD, TBD
City: Columbia Cty State: FL

Name Address and License # of Structural Engineer of Record, If there is one, for the building.

Name: License #:
Address:
City: State:

General Truss Engineering Criteria & Design Loads (Individual Truss Design Drawings Show Special Loading Conditions):

Design Code: FBC2023/TPI2014 Design Program: MiTek 20/20 8.8
Wind Code: ASCE 7-22 Wind Speed: 130 mph
Roof Load: 37.0 psf Floor Load: N/A psf

This package includes 12 individual, Truss Design Drawings and 0 Additional Drawings.
With my seal affixed to this sheet, I hereby certify that I am the Truss Design Engineer and this index sheet conforms to 61G15-31.003, section 5 of the Florida Board of Professional Engineers Rules.

No.	Seal#	Truss Name	Date
1	T35780184	CJ01	12/11/24
2	T35780185	CJ03	12/11/24
3	T35780186	CJ05	12/11/24
4	T35780187	EJ01	12/11/24
5	T35780188	HJ10	12/11/24
6	T35780189	T01	12/11/24
7	T35780190	T02	12/11/24
8	T35780191	T03	12/11/24
9	T35780192	T04	12/11/24
10	T35780193	T05	12/11/24
11	T35780194	T06	12/11/24
12	T35780195	T06G	12/11/24

Columbia County Building Department
Plans Reviewed for Code Compliance
State of Florida

This item has been digitally signed and sealed by ORegan, Philip, PE on the date adj
Printed copies of this document are not considered signed and sealed and the signat... copies

The truss drawing(s) referenced above have been prepared by MiTek USA, Inc. under my direct supervision based on the parameters provided by Builders FirstSource-Lake City, FL.

Truss Design Engineer's Name: ORegan, Philip
My license renewal date for the state of Florida is February 28, 2025.

IMPORTANT NOTE: The seal on these truss component designs is a certification that the engineer named is licensed in the jurisdiction(s) identified and that the designs comply with ANSI/TPI 1. These designs are based upon parameters shown (e.g., loads, supports, dimensions, shapes and design codes), which were given to MiTek or TRENCO. Any project specific information included is for MiTek's or TRENCO's customers file reference purpose only, and was not taken into account in the preparation of these designs. MiTek or TRENCO has not independently verified the applicability of the design parameters or the designs for any particular building. Before use, the building designer should verify applicability of design parameters and properly incorporate these designs into the overall building design per ANSI/TPI 1, Chapter 2.

PHILIP J. O'REGAN
LICENSE
No 58126
STATE OF FLORIDA
PROFESSIONAL ENGINEER

Philip J. O'Regan PE No.58126
MiTek Inc. DBA MiTek USA FL Cert 6634
16023 Swingley Ridge Rd. Chesterfield, MO 63017
Date:

December 11,2024

ORegan, Philip

Job	Truss	Truss Type	Qty	Ply	MARTIN - SPEC HSE
4374769	CJ01	Jack-Open	8	1	T35780184 Job Reference (optional)

Builders FirstSource (Lake City,FL), Lake City, FL - 32055, 8.830 s Nov 8 2024 MiTek Industries, Inc. Tue Dec 10 12:37:33 2024 Page 1
ID:5x40uGjGkkUdz32erCZYBuz1VUH-q69Y0idg_WIiYrg6EkzIlvD3NuSb_PxdqxPbJAyAMoG

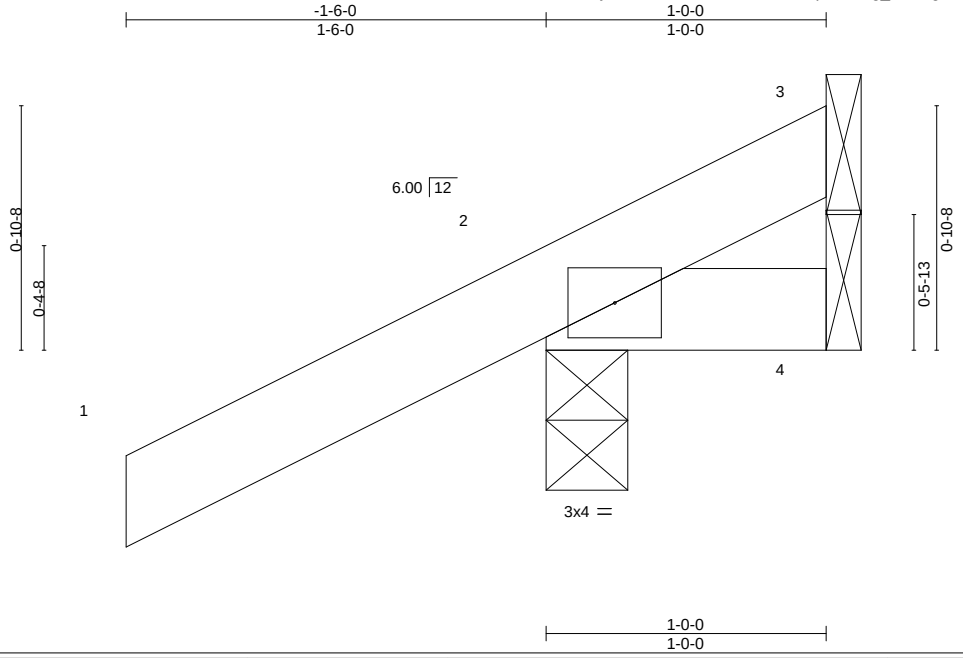

LOADING (psf)		SPACING- 2-0-0		CSI.		DEFL. in (loc) l/defl L/d		PLATES GRIP
TCLL	20.0	Plate Grip DOL	1.25	TC	0.16	Vert(LL) 0.00 7 >999 240		MT20 244/190
TCDL	7.0	Lumber DOL	1.25	BC	0.04	Vert(CT) 0.00 7 >999 180		
BCLL	0.0 *	Rep Stress Incr	YES	WB	0.00	Horz(CT) 0.00 2 n/a n/a		
BCDL	10.0	Code FBC2023/TPI2014		Matrix-MP				Weight: 6 lb FT = 20%

LUMBER-
TOP CHORD 2x4 SP No.2
BOT CHORD 2x4 SP No.2

BRACING-
TOP CHORD Structural wood sheathing directly applied or 1-0-0 oc purlins.
BOT CHORD Rigid ceiling directly applied or 10-0-0 oc bracing.

REACTIONS. (size) 3=Mechanical, 2=0-3-8, 4=Mechanical
Max Horz 2=44(LC 12)
Max Uplift 3=-6(LC 1), 2=-79(LC 12), 4=-19(LC 1)
Max Grav 3=9(LC 8), 2=179(LC 1), 4=20(LC 16)

FORCES. (lb) - Max. Comp./Max. Ten. - All forces 250 (lb) or less except when shown.

NOTES-
1) Wind: ASCE 7-22; Vult=130mph (3-second gust) Vasd=101mph; TCDL=4.2psf; BCDL=3.0psf; h=20ft; Cat. II; Exp B; Encl., GCpi=0.18; MWFRS (envelope) gable end zone and C-C Zone3 zone;C-C for members and forces & MWFRS for reactions shown; Lumber DOL=1.60 plate grip DOL=1.60
2) Building Designer / Project engineer responsible for verifying applied roof live load shown covers rain loading requirements specific to the use of this truss component.
3) This truss has been designed for a 10.0 psf bottom chord live load nonconcurrent with any other live loads.
4) * This truss has been designed for a live load of 20.0psf on the bottom chord in all areas where a rectangle 3-6-0 tall by 2-0-0 wide will fit between the bottom chord and any other members.
5) Refer to girder(s) for truss to truss connections.
6) Provide mechanical connection (by others) of truss to bearing plate capable of withstanding 100 lb uplift at joint(s) 3, 2, 4.

This item has been digitally signed and sealed by ORegan, Philip, PE on the date indicated here. Printed copies of this document are not considered signed and sealed and the signature must be verified on any electronic copies.

Philip J. O'Regan PE No.58126
MiTek Inc. DBA MiTek USA FL Cert 6634
16023 Swingley Ridge Rd. Chesterfield, MO 63017
Date:

December 11,2024

WARNING - Verify design parameters and READ NOTES ON THIS AND INCLUDED MITEK REFERENCE PAGE MII-7473 rev. 1/2/2023 BEFORE USE.
Design valid for use only with MiTek® connectors. This design is based only upon parameters shown, and is for an individual building component, not a truss system. Before use, the building designer must verify the applicability of design parameters and properly incorporate this design into the overall building design. Bracing indicated is to prevent buckling of individual truss web and/or chord members only. Additional temporary and permanent bracing is always required for stability and to prevent collapse with possible personal injury and property damage. For general guidance regarding the fabrication, storage, delivery, erection and bracing of trusses and truss systems, see **ANSI/TPI1 Quality Criteria and DSB-22** available from Truss Plate Institute (www.tpinst.org) and **BCSI Building Component Safety Information** available from the Structural Building Component Association (www.sbcscomponents.com)

MiTek®
16023 Swingley Ridge Rd.
Chesterfield, MO 63017
314.434.1200 / MiTek-US.com

Job	Truss	Truss Type	Qty	Ply	MARTIN - SPEC HSE
4374769	CJ03	Jack-Open	8	1	T35780185 Job Reference (optional)

Builders FirstSource (Lake City,FL), Lake City, FL - 32055, 8.830 s Nov 8 2024 MiTek Industries, Inc. Tue Dec 10 12:37:34 2024 Page 1
ID:5x40uGjGkkUdz32erCZYBuz1VUH-lJjwD2eIlpRZA_FloRUXH7mE7ImKjsBn3b98rcyAMoF

Scale = 1:13.3

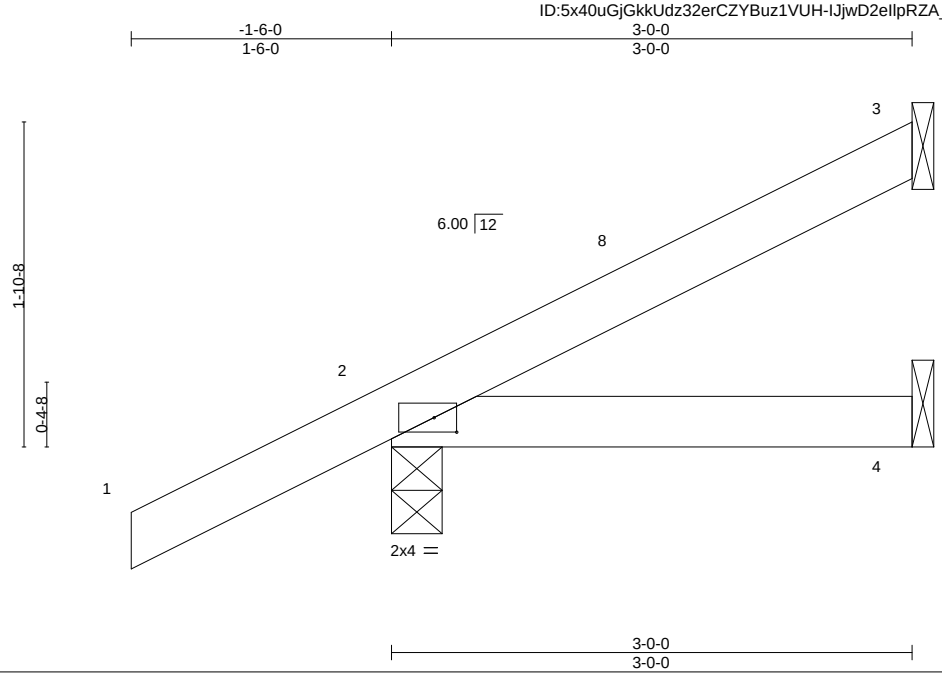

Plate Offsets (X,Y)-- [2:0-1-9,0-1-0]

LOADING (psf)		SPACING- 2-0-0		CSI.		DEFL. in (loc) l/defl L/d					PLATES	GRIP
TCLL	20.0	Plate Grip DOL	1.25	TC	0.16	Vert(LL)	-0.00	4-7	>999	240	MT20	244/190
TCDL	7.0	Lumber DOL	1.25	BC	0.07	Vert(CT)	-0.01	4-7	>999	180		
BCLL	0.0 *	Rep Stress Incr	YES	WB	0.00	Horz(CT)	0.00	3	n/a	n/a		
BCDL	10.0	Code FBC2023/TPI2014		Matrix-MP							Weight: 12 lb	FT = 20%

LUMBER-
TOP CHORD 2x4 SP No.2
BOT CHORD 2x4 SP No.2

BRACING-
TOP CHORD Structural wood sheathing directly applied or 3-0-0 oc purlins.
BOT CHORD Rigid ceiling directly applied or 10-0-0 oc bracing.

REACTIONS. (size) 3=Mechanical, 2=0-3-8, 4=Mechanical
Max Horz 2=82(LC 12)
Max Uplift 3=-41(LC 12), 2=-69(LC 12)
Max Grav 3=60(LC 1), 2=210(LC 1), 4=50(LC 3)

FORCES. (lb) - Max. Comp./Max. Ten. - All forces 250 (lb) or less except when shown.

NOTES-
1) Wind: ASCE 7-22; Vult=130mph (3-second gust) Vasd=101mph; TCDL=4.2psf; BCDL=3.0psf; h=20ft; Cat. II; Exp B; Encl., GCpi=0.18; MWFRS (envelope) gable end zone and C-C Zone3 -1-6-0 to 1-6-0, Zone1 1-6-0 to 2-11-4 zone;C-C for members and forces & MWFRS for reactions shown; Lumber DOL=1.60 plate grip DOL=1.60
2) Building Designer / Project engineer responsible for verifying applied roof live load shown covers rain loading requirements specific to the use of this truss component.
3) This truss has been designed for a 10.0 psf bottom chord live load nonconcurrent with any other live loads.
4) * This truss has been designed for a live load of 20.0psf on the bottom chord in all areas where a rectangle 3-6-0 tall by 2-0-0 wide will fit between the bottom chord and any other members.
5) Refer to girder(s) for truss to truss connections.
6) Provide mechanical connection (by others) of truss to bearing plate capable of withstanding 100 lb uplift at joint(s) 3, 2.

This item has been digitally signed and sealed by ORegan, Philip, PE on the date indicated here. Printed copies of this document are not considered signed and sealed and the signature must be verified on any electronic copies.

Philip J. O'Regan PE No.58126
MiTek Inc. DBA MiTek USA FL Cert 6634
16023 Swingley Ridge Rd. Chesterfield, MO 63017
Date:

December 11,2024

WARNING - Verify design parameters and READ NOTES ON THIS AND INCLUDED MITEK REFERENCE PAGE MII-7473 rev. 1/2/2023 BEFORE USE.
Design valid for use only with MiTek® connectors. This design is based only upon parameters shown, and is for an individual building component, not a truss system. Before use, the building designer must verify the applicability of design parameters and properly incorporate this design into the overall building design. Bracing indicated is to prevent buckling of individual truss web and/or chord members only. Additional temporary and permanent bracing is always required for stability and to prevent collapse with possible personal injury and property damage. For general guidance regarding the fabrication, storage, delivery, erection and bracing of trusses and truss systems, see **ANSI/TPI1 Quality Criteria and DSB-22** available from Truss Plate Institute (www.tpinst.org) and **BCSI Building Component Safety Information** available from the Structural Building Component Association (www.sbcscomponents.com)

MiTek®
16023 Swingley Ridge Rd.
Chesterfield, MO 63017
314.434.1200 / MiTek-US.com

Job	Truss	Truss Type	Qty	Ply	MARTIN - SPEC HSE
4374769	CJ05	Jack-Open	8	1	T35780186 Job Reference (optional)

Builders FirstSource (Lake City,FL), Lake City, FL - 32055, 8.830 s Nov 8 2024 MiTek Industries, Inc. Tue Dec 10 12:37:34 2024 Page 1
ID:5x40uGjGkkUdz32erCZYBuz1VUH-IJjwD2eIlpRZA_FIoRUXH7mCKIkijsBn3b98rcyAMoF

Scale = 1:18.2

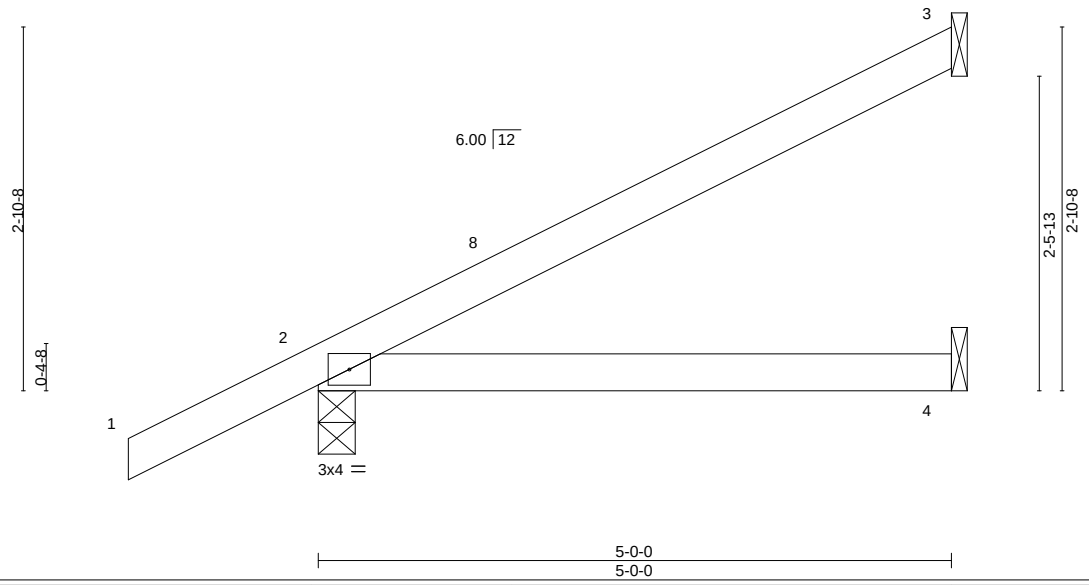

LOADING (psf)		SPACING- 2-0-0		CSI.		DEFL.	in	(loc)	l/defl	L/d	PLATES	GRIP
TCLL	20.0	Plate Grip DOL	1.25	TC	0.28	Vert(LL)	0.03	4-7	>999	240	MT20	244/190
TCDL	7.0	Lumber DOL	1.25	BC	0.24	Vert(CT)	-0.05	4-7	>999	180		
BCLL	0.0 *	Rep Stress Incr	YES	WB	0.00	Horz(CT)	0.00	3	n/a	n/a		
BCDL	10.0	Code FBC2023/TPI2014		Matrix-MP							Weight: 18 lb	FT = 20%

LUMBER-
TOP CHORD 2x4 SP No.2
BOT CHORD 2x4 SP No.2

BRACING-
TOP CHORD Structural wood sheathing directly applied or 5-0-0 oc purlins.
BOT CHORD Rigid ceiling directly applied or 10-0-0 oc bracing.

REACTIONS. (size) 3=Mechanical, 2=0-3-8, 4=Mechanical
Max Horz 2=120(LC 12)
Max Uplift 3=-77(LC 12), 2=-79(LC 12), 4=-1(LC 12)
Max Grav 3=113(LC 1), 2=276(LC 1), 4=88(LC 3)

FORCES. (lb) - Max. Comp./Max. Ten. - All forces 250 (lb) or less except when shown.

NOTES-
1) Wind: ASCE 7-22; Vult=130mph (3-second gust) Vasd=101mph; TCDL=4.2psf; BCDL=3.0psf; h=20ft; Cat. II; Exp B; Encl., GCpi=0.18; MWFRS (envelope) gable end zone and C-C Zone3 -1-6-0 to 1-6-0, Zone1 1-6-0 to 4-11-4 zone;C-C for members and forces & MWFRS for reactions shown; Lumber DOL=1.60 plate grip DOL=1.60
2) Building Designer / Project engineer responsible for verifying applied roof live load shown covers rain loading requirements specific to the use of this truss component.
3) This truss has been designed for a 10.0 psf bottom chord live load nonconcurrent with any other live loads.
4) * This truss has been designed for a live load of 20.0psf on the bottom chord in all areas where a rectangle 3-6-0 tall by 2-0-0 wide will fit between the bottom chord and any other members.
5) Refer to girder(s) for truss to truss connections.
6) Provide mechanical connection (by others) of truss to bearing plate capable of withstanding 100 lb uplift at joint(s) 3, 2, 4.

This item has been digitally signed and sealed by ORegan, Philip, PE on the date indicated here. Printed copies of this document are not considered signed and sealed and the signature must be verified on any electronic copies.

Philip J. O'Regan PE No.58126
MiTek Inc. DBA MiTek USA FL Cert 6634
16023 Swingley Ridge Rd. Chesterfield, MO 63017
Date:

December 11,2024

WARNING - Verify design parameters and READ NOTES ON THIS AND INCLUDED MITEK REFERENCE PAGE MII-7473 rev. 1/2/2023 BEFORE USE.
Design valid for use only with MiTek® connectors. This design is based only upon parameters shown, and is for an individual building component, not a truss system. Before use, the building designer must verify the applicability of design parameters and properly incorporate this design into the overall building design. Bracing indicated is to prevent buckling of individual truss web and/or chord members only. Additional temporary and permanent bracing is always required for stability and to prevent collapse with possible personal injury and property damage. For general guidance regarding the fabrication, storage, delivery, erection and bracing of trusses and truss systems, see **ANSI/TPI1 Quality Criteria and DSB-22** available from Truss Plate Institute (www.tpinst.org) and **BCSI Building Component Safety Information** available from the Structural Building Component Association (www.sbcscomponents.com)

MiTek®
16023 Swingley Ridge Rd.
Chesterfield, MO 63017
314.434.1200 / MiTek-US.com

Job	Truss	Truss Type	Qty	Ply	MARTIN - SPEC HSE
4374769	EJ01	Jack-Partial	18	1	T35780187 Job Reference (optional)

Builders FirstSource (Lake City,FL), Lake City, FL - 32055, 8.830 s Nov 8 2024 MiTek Industries, Inc. Tue Dec 10 12:37:34 2024 Page 1
ID:5x40uGjGkkUdz32erCZYBuz1VUH-IJjwD2eIlpRZA_FIoRUXH7m7uIfNjsBn3b98rcyAMoF

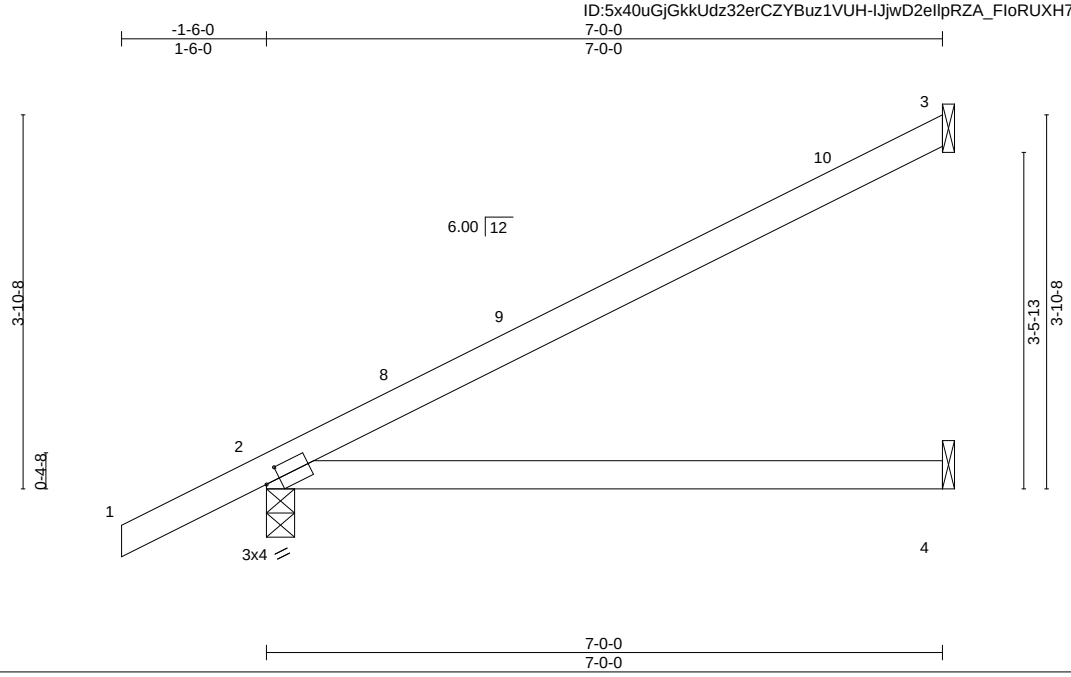

Plate Offsets (X,Y)-- [2:0-1-13,0-1-8]

LOADING (psf)		SPACING- 2-0-0		CSI.		DEFL. in (loc) l/defl L/d		PLATES	GRIP
TCLL	20.0	Plate Grip DOL	1.25	TC	0.63	Vert(LL) 0.11 4-7 >741 240		MT20	244/190
TCDL	7.0	Lumber DOL	1.25	BC	0.51	Vert(CT) -0.22 4-7 >385 180			
BCLL	0.0 *	Rep Stress Incr	YES	WB	0.00	Horz(CT) 0.01 2 n/a n/a			
BCDL	10.0	Code FBC2023/TPI2014		Matrix-MS				Weight: 25 lb	FT = 20%

LUMBER-
TOP CHORD 2x4 SP No.2
BOT CHORD 2x4 SP No.2

BRACING-
TOP CHORD Structural wood sheathing directly applied or 6-0-0 oc purlins.
BOT CHORD Rigid ceiling directly applied or 10-0-0 oc bracing.

REACTIONS. (size) 3=Mechanical, 2=0-3-8, 4=Mechanical
Max Horz 2=153(LC 12)
Max Uplift 3=-99(LC 12), 2=-93(LC 12), 4=-1(LC 12)
Max Grav 3=164(LC 1), 2=346(LC 1), 4=126(LC 3)

FORCES. (lb) - Max. Comp./Max. Ten. - All forces 250 (lb) or less except when shown.

NOTES-
1) Wind: ASCE 7-22; Vult=130mph (3-second gust) Vasd=101mph; TCDL=4.2psf; BCDL=3.0psf; h=20ft; Cat. II; Exp B; Encl., GCpi=0.18; MWFRS (envelope) gable end zone and C-C Zone3 -1-6-0 to 1-6-0, Zone1 1-6-0 to 6-11-4 zone;C-C for members and forces & MWFRS for reactions shown; Lumber DOL=1.60 plate grip DOL=1.60
2) Building Designer / Project engineer responsible for verifying applied roof live load shown covers rain loading requirements specific to the use of this truss component.
3) This truss has been designed for a 10.0 psf bottom chord live load nonconcurrent with any other live loads.
4) * This truss has been designed for a live load of 20.0psf on the bottom chord in all areas where a rectangle 3-6-0 tall by 2-0-0 wide will fit between the bottom chord and any other members.
5) Refer to girder(s) for truss to truss connections.
6) Provide mechanical connection (by others) of truss to bearing plate capable of withstanding 100 lb uplift at joint(s) 3, 2, 4.

This item has been digitally signed and sealed by ORegan, Philip, PE on the date indicated here. Printed copies of this document are not considered signed and sealed and the signature must be verified on any electronic copies.

Philip J. O'Regan PE No.58126
MiTek Inc. DBA MiTek USA FL Cert 6634
16023 Swingley Ridge Rd. Chesterfield, MO 63017
Date:

December 11,2024

WARNING - Verify design parameters and READ NOTES ON THIS AND INCLUDED MITEK REFERENCE PAGE MII-7473 rev. 1/2/2023 BEFORE USE.
Design valid for use only with MiTek® connectors. This design is based only upon parameters shown, and is for an individual building component, not a truss system. Before use, the building designer must verify the applicability of design parameters and properly incorporate this design into the overall building design. Bracing indicated is to prevent buckling of individual truss web and/or chord members only. Additional temporary and permanent bracing is always required for stability and to prevent collapse with possible personal injury and property damage. For general guidance regarding the fabrication, storage, delivery, erection and bracing of trusses and truss systems, see **ANSI/TPI1 Quality Criteria and DSB-22** available from Truss Plate Institute (www.tpinst.org) and **BCSI Building Component Safety Information** available from the Structural Building Component Association (www.sbcscomponents.com)

MiTek®
16023 Swingley Ridge Rd.
Chesterfield, MO 63017
314.434.1200 / MiTek-US.com

Job	Truss	Truss Type	Qty	Ply	MARTIN - SPEC HSE
4374769	HJ10	Diagonal Hip Girder	4	1	T35780188 Job Reference (optional)

Builders FirstSource (Lake City,FL), Lake City, FL - 32055, 8.830 s Nov 8 2024 MiTek Industries, Inc. Tue Dec 10 12:37:35 2024 Page 1
ID:5x40uGjGkkUdz32erCZYBuz1VUH-mVHIQOewW7ZPo8qVM8?mqKIILi_0SDawIFuhO2yAMoE

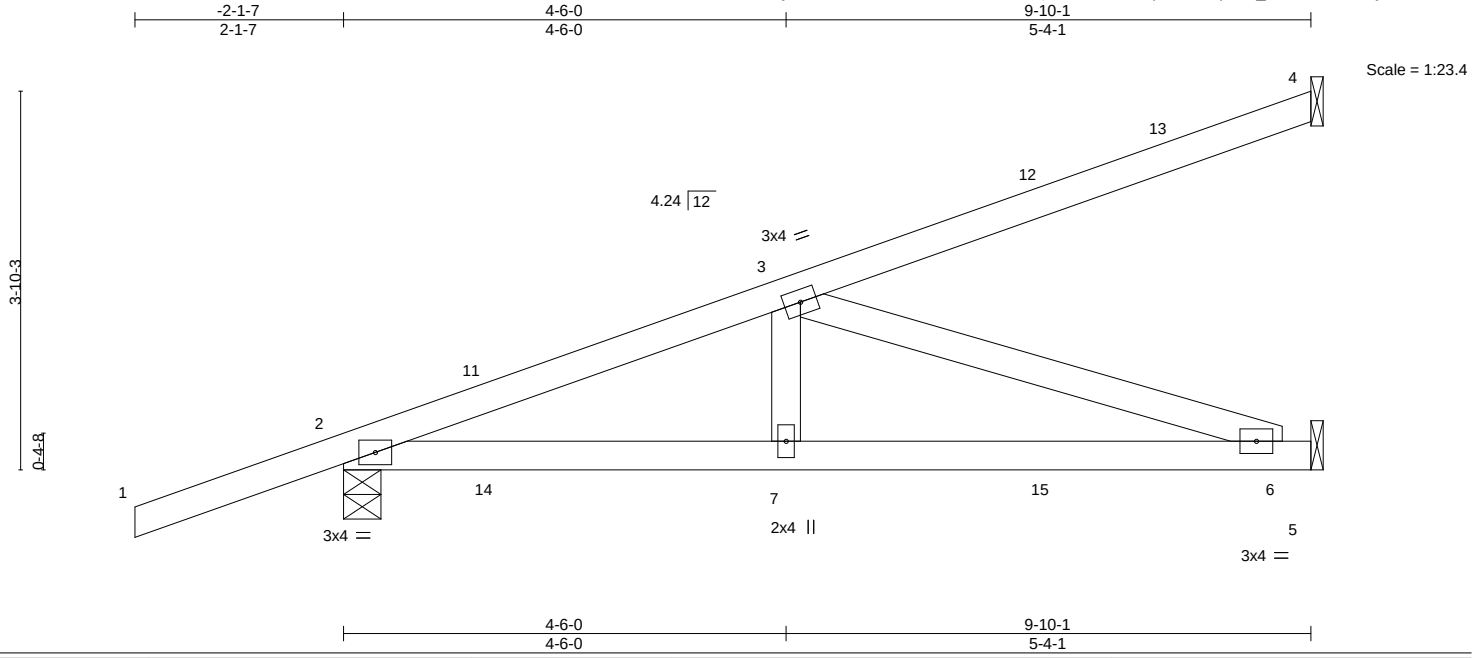

LOADING (psf)		SPACING- 2-0-0		CSI.		DEFL. in (loc) l/defl L/d		PLATES GRIP
TCLL	20.0	Plate Grip DOL	1.25	TC	0.58	Vert(LL) -0.05 6-7 >999 240		MT20 244/190
TCDL	7.0	Lumber DOL	1.25	BC	0.62	Vert(CT) -0.12 6-7 >992 180		
BCLL	0.0 *	Rep Stress Incr	NO	WB	0.44	Horz(CT) 0.01 5 n/a n/a		
BCDL	10.0	Code FBC2023/TPI2014		Matrix-MS				Weight: 43 lb FT = 20%

LUMBER-
TOP CHORD 2x4 SP No.2
BOT CHORD 2x4 SP No.2
WEBS 2x4 SP No.3

BRACING-
TOP CHORD Structural wood sheathing directly applied or 6-0-0 oc purlins.
BOT CHORD Rigid ceiling directly applied or 10-0-0 oc bracing.

REACTIONS. (size) 4=Mechanical, 2=0-4-9, 5=Mechanical
Max Horz 2=167(LC 4)
Max Uplift 4=-93(LC 4), 2=-174(LC 4), 5=-85(LC 8)
Max Grav 4=149(LC 1), 2=527(LC 1), 5=299(LC 1)

FORCES. (lb) - Max. Comp./Max. Ten. - All forces 250 (lb) or less except when shown.
TOP CHORD 2-3=-799/236
BOT CHORD 2-7=-278/729, 6-7=-278/729
WEBS 3-7=0/281, 3-6=-767/293

NOTES-
1) Wind: ASCE 7-22; Vult=130mph (3-second gust) Vasd=101mph; TCDL=4.2psf; BCDL=3.0psf; h=20ft; Cat. II; Exp B; Encl., GCpi=0.18; MWFRS (envelope) gable end zone; Lumber DOL=1.60 plate grip DOL=1.60
2) Building Designer / Project engineer responsible for verifying applied roof live load shown covers rain loading requirements specific to the use of this truss component.
3) This truss has been designed for a 10.0 psf bottom chord live load nonconcurrent with any other live loads.
4) * This truss has been designed for a live load of 20.0psf on the bottom chord in all areas where a rectangle 3-6-0 tall by 2-0-0 wide will fit between the bottom chord and any other members.
5) Refer to girder(s) for truss to truss connections.
6) Provide mechanical connection (by others) of truss to bearing plate capable of withstanding 100 lb uplift at joint(s) 4, 5 except (jt=lb) 2=174.
7) Hanger(s) or other connection device(s) shall be provided sufficient to support concentrated load(s) 69 lb down and 63 lb up at 1-6-1, 69 lb down and 63 lb up at 1-6-1, 23 lb down and 46 lb up at 4-4-0, 23 lb down and 46 lb up at 4-4-0, and 45 lb down and 87 lb up at 7-1-15, and 45 lb down and 87 lb up at 7-1-15 on top chord, and 20 lb down and 39 lb up at 1-6-1, 20 lb down and 39 lb up at 1-6-1, 23 lb down at 4-4-0, 23 lb down at 4-4-0, and 41 lb down and 16 lb up at 7-1-15, and 41 lb down and 16 lb up at 7-1-15 on bottom chord. The design/selection of such connection device(s) is the responsibility of others.
8) In the LOAD CASE(S) section, loads applied to the face of the truss are noted as front (F) or back (B).

LOAD CASE(S) Standard
1) Dead + Roof Live (balanced): Lumber Increase=1.25, Plate Increase=1.25
Uniform Loads (plf)
Vert: 1-4=-54, 5-8=-20
Concentrated Loads (lb)
Vert: 7=-6(F=-3, B=-3) 12=-73(F=-36, B=-36) 15=-59(F=-29, B=-29)

This item has been digitally signed and sealed by ORegan, Philip, PE on the date indicated here. Printed copies of this document are not considered signed and sealed and the signature must be verified on any electronic copies.

Philip J. O'Regan PE No.58126
MiTek Inc. DBA MiTek USA FL Cert 6634
16023 Swingley Ridge Rd. Chesterfield, MO 63017
Date:

December 11,2024

WARNING - Verify design parameters and READ NOTES ON THIS AND INCLUDED MITEK REFERENCE PAGE MII-7473 rev. 1/2/2023 BEFORE USE.
Design valid for use only with MiTek® connectors. This design is based only upon parameters shown, and is for an individual building component, not a truss system. Before use, the building designer must verify the applicability of design parameters and properly incorporate this design into the overall building design. Bracing indicated is to prevent buckling of individual truss web and/or chord members only. Additional temporary and permanent bracing is always required for stability and to prevent collapse with possible personal injury and property damage. For general guidance regarding the fabrication, storage, delivery, erection and bracing of trusses and truss systems, see **ANSI/TPI1 Quality Criteria and DSB-22** available from Truss Plate Institute (www.tpinst.org) and **BCSI Building Component Safety Information** available from the Structural Building Component Association (www.sbcscomponents.com)

MiTek®
16023 Swingley Ridge Rd.
Chesterfield, MO 63017
314.434.1200 / MiTek-US.com

Job	Truss	Truss Type	Qty	Ply	MARTIN - SPEC HSE
4374769	T01	Hip Girder	2	1	T35780189 Job Reference (optional)

Builders FirstSource (Lake City,FL), Lake City, FL - 32055, 8.830 s Nov 8 2024 MiTek Industries, Inc. Tue Dec 10 12:37:36 2024 Page 1

ID:5x40uGjGkkUdz32erCZYBuz1VUH-EhrgekfYHRhGPIPhwsW?NYrOI5OwBXX4WveFwVyAMoD

-1-6-0	3-11-15	7-0-0	12-0-5	16-5-10	21-6-0	24-6-1	28-6-0	30-0-0
1-6-0	3-11-15	3-0-1	5-0-5	4-5-5	5-0-5	3-0-1	3-11-15	1-6-0

Scale = 1:51.3

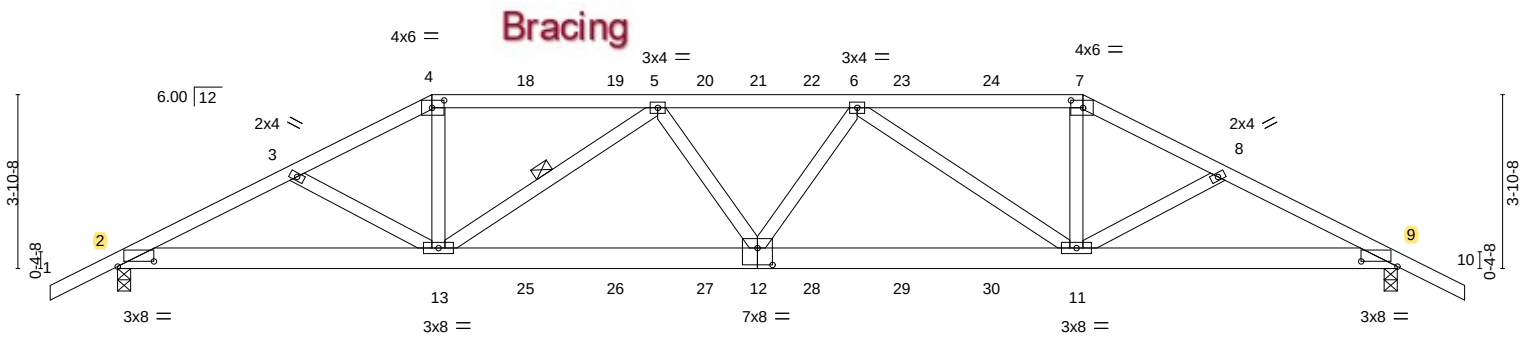

7-0-0	14-3-0	21-6-0	28-6-0
7-0-0	7-3-0	7-3-0	7-0-0

Plate Offsets (X,Y)-- [2:0-9-11,0-1-6], [4:0-3-4,0-2-0], [7:0-3-4,0-2-0], [9:0-9-11,0-1-6], [12:0-4-0,0-4-8]

LOADING (psf)		**SPACING-** 2-0-0		**CSI.**		**DEFL.**	in	(loc)	l/defl	L/d	**PLATES**	**GRIP**
TCLL	20.0	Plate Grip DOL	1.25	TC	0.95	Vert(LL)	0.24	12	>999	240	MT20	244/190
TCDL	7.0	Lumber DOL	1.25	BC	0.38	Vert(CT)	-0.43	11-12	>787	180		
BCLL	0.0 *	Rep Stress Incr	NO	WB	0.97	Horz(CT)	0.09	9	n/a	n/a		
BCDL	10.0	Code FBC2023/TPI2014		Matrix-MS							Weight: 165 lb	FT = 20%

LUMBER-

TOP CHORD 2x4 SP No.2
BOT CHORD 2x6 SP 2400F 2.0E or 2x6 SP M 26
WEBS 2x4 SP No.3

BRACING-

TOP CHORD Structural wood sheathing directly applied.
BOT CHORD Rigid ceiling directly applied or 7-5-6 oc bracing.
WEBS 1 Row at midpt 5-13

REACTIONS. (size) 2=0-3-8, 9=0-3-8
Max Horz 2=-71(LC 30)
Max Uplift 2=-803(LC 8), 9=-823(LC 9)
Max Grav 2=2207(LC 1), 9=2244(LC 1)

FORCES. (lb) - Max. Comp./Max. Ten. - All forces 250 (lb) or less except when shown.
TOP CHORD 2-3=-4382/1605, 3-4=-4222/1555, 4-5=-3815/1438, 5-6=-5120/1886, 6-7=-3887/1475, 7-8=-4304/1597, 8-9=-4464/1648
BOT CHORD 2-13=-1429/3879, 12-13=-1810/4967, 11-12=-1810/4990, 9-11=-1397/3952
WEBS 4-13=-461/1480, 5-13=-1468/646, 5-12=-54/416, 6-12=-18/398, 6-11=-1396/592, 7-11=-431/1444

NOTES-

1) Unbalanced roof live loads have been considered for this design.
2) Wind: ASCE 7-22; Vult=130mph (3-second gust) Vasd=101mph; TCDL=4.2psf; BCDL=3.0psf; h=20ft; Cat. II; Exp B; Encl., GCpi=0.18; MWFRS (envelope) gable end zone; Lumber DOL=1.60 plate grip DOL=1.60
3) Building Designer / Project engineer responsible for verifying applied roof live load shown covers rain loading requirements specific to the use of this truss component.
4) Provide adequate drainage to prevent water ponding.
5) This truss has been designed for a 10.0 psf bottom chord live load nonconcurrent with any other live loads.
6) * This truss has been designed for a live load of 20.0psf on the bottom chord in all areas where a rectangle 3-6-0 tall by 2-0-0 wide will fit between the bottom chord and any other members.
7) Provide mechanical connection (by others) of truss to bearing plate capable of withstanding 100 lb uplift at joint(s) except (jt=lb) 2=803, 9=823.
8) Hanger(s) or other connection device(s) shall be provided sufficient to support concentrated load(s) 128 lb down and 102 lb up at 7-0-0, 110 lb down and 102 lb up at 9-0-12, 110 lb down and 102 lb up at 11-0-12, 110 lb down and 102 lb up at 13-0-12, 110 lb down and 94 lb up at 14-3-0, 110 lb down and 102 lb up at 15-5-4, 110 lb down and 102 lb up at 17-5-4, and 110 lb down and 102 lb up at 19-5-4, and 230 lb down and 200 lb up at 21-6-0 on top chord, and 335 lb down and 135 lb up at 7-0-0, 86 lb down and 21 lb up at 9-0-12, 86 lb down and 21 lb up at 11-0-12, 86 lb down and 21 lb up at 13-0-12, 86 lb down and 21 lb up at 14-3-0, 86 lb down and 21 lb up at 15-5-4, 86 lb down and 21 lb up at 17-5-4, and 86 lb down and 21 lb up at 19-5-4, and 335 lb down and 135 lb up at 21-5-4 on bottom chord. The design/selection of such connection device(s) is the responsibility of others.
9) In the LOAD CASE(S) section, loads applied to the face of the truss are noted as front (F) or back (B).

LOAD CASE(S) Standard

This item has been digitally signed and sealed by ORegan, Philip, PE on the date indicated here. Printed copies of this document are not considered signed and sealed and the signature must be verified on any electronic copies.

Philip J. O'Regan PE No.58126
MiTek Inc. DBA MiTek USA FL Cert 6634
16023 Swingley Ridge Rd. Chesterfield, MO 63017
Date:

December 11,2024

Continued on page 2

WARNING - Verify design parameters and READ NOTES ON THIS AND INCLUDED MITEK REFERENCE PAGE MII-7473 rev. 1/2/2023 BEFORE USE.
Design valid for use only with MiTek® connectors. This design is based only upon parameters shown, and is for an individual building component, not a truss system. Before use, the building designer must verify the applicability of design parameters and properly incorporate this design into the overall building design. Bracing indicated is to prevent buckling of individual truss web and/or chord members only. Additional temporary and permanent bracing is always required for stability and to prevent collapse with possible personal injury and property damage. For general guidance regarding the fabrication, storage, delivery, erection and bracing of trusses and truss systems, see **ANSI/TPI1 Quality Criteria and DSB-22** available from Truss Plate Institute (www.tpinst.org) and **BCSI Building Component Safety Information** available from the Structural Building Component Association (www.sbcscomponents.com)

MiTek®
16023 Swingley Ridge Rd.
Chesterfield, MO 63017
314.434.1200 / MiTek-US.com

LOAD CASE(S) Standard

1) Dead + Roof Live (balanced): Lumber Increase=1.25, Plate Increase=1.25
   Uniform Loads (plf)
   Vert: 1-4=-54, 4-7=-54, 7-10=-54, 2-9=-20
   Concentrated Loads (lb)
   Vert: 4=-110(B) 7=-182(B) 12=-64(B) 13=-335(B) 11=-335(B) 18=-110(B) 19=-110(B) 20=-110(B) 21=-110(B) 22=-110(B) 23=-110(B) 24=-110(B) 25=-64(B) 26=-64(B) 27=-64(B) 28=-64(B) 29=-64(B) 30=-64(B)

WARNING - Verify design parameters and READ NOTES ON THIS AND INCLUDED MITEK REFERENCE PAGE MII-7473 rev. 1/2/2023 BEFORE USE.

Design valid for use only with MiTek® connectors. This design is based only upon parameters shown, and is for an individual building component, not a truss system. Before use, the building designer must verify the applicability of design parameters and properly incorporate this design into the overall building design. Bracing indicated is to prevent buckling of individual truss web and/or chord members only. Additional temporary and permanent bracing is always required for stability and to prevent collapse with possible personal injury and property damage. For general guidance regarding the fabrication, storage, delivery, erection and bracing of trusses and truss systems, see **ANSI/TPI1 Quality Criteria and DSB-22** available from Truss Plate Institute (www.tpinst.org) and **BCSI Building Component Safety Information** available from the Structural Building Component Association (www.sbcscomponents.com)

MiTek®
16023 Swingley Ridge Rd.
Chesterfield, MO 63017
314.434.1200 / MiTek-US.com

Job	Truss	Truss Type	Qty	Ply	MARTIN - SPEC HSE
4374769	T02	Hip	2	1	T35780190 Job Reference (optional)

Builders FirstSource (Lake City,FL), Lake City, FL - 32055, 8.830 s Nov 8 2024 MiTek Industries, Inc. Tue Dec 10 12:37:37 2024 Page 1

ID:5x40uGjGkkUdz32erCZYBuz1VUH-itP2r3gA2kp71S_tTZ1EvlOizVeLw8oDlZNoSxyAMoC

-1-6-0	4-9-8	9-0-0	14-3-0	19-6-0	23-8-8	28-6-0	30-0-0
1-6-0	4-9-8	4-2-8	5-3-0	5-3-0	4-2-8	4-9-8	1-6-0

Scale = 1:51.3

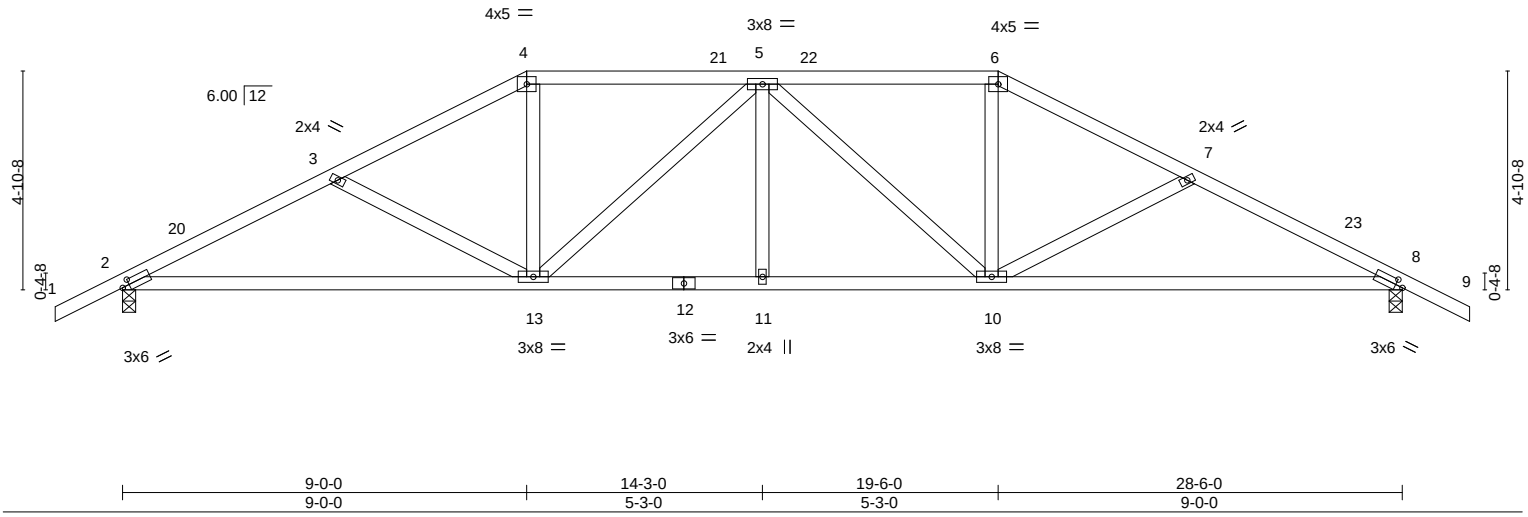

Plate Offsets (X,Y)-- [2:0-1-15,0-1-8], [8:0-1-15,0-1-8]

LOADING (psf)		SPACING- 2-0-0		CSI.		DEFL.	in	(loc)	l/defl	L/d	PLATES	GRIP
TCLL	20.0	Plate Grip DOL	1.25	TC	0.38	Vert(LL)	-0.15	10-19	>999	240	MT20	244/190
TCDL	7.0	Lumber DOL	1.25	BC	0.75	Vert(CT)	-0.32	10-19	>999	180		
BCLL	0.0 *	Rep Stress Incr	YES	WB	0.33	Horz(CT)	0.07	8	n/a	n/a		
BCDL	10.0	Code FBC2023/TPI2014		Matrix-MS							Weight: 146 lb	FT = 20%

LUMBER-

TOP CHORD 2x4 SP No.2
BOT CHORD 2x4 SP No.2
WEBS 2x4 SP No.3

BRACING-

TOP CHORD Structural wood sheathing directly applied or 4-0-14 oc purlins.
BOT CHORD Rigid ceiling directly applied or 8-6-12 oc bracing.

REACTIONS. (size) 2=0-3-8, 8=0-3-8
Max Horz 2=88(LC 16)
Max Uplift 2=-317(LC 12), 8=-317(LC 13)
Max Grav 2=1136(LC 1), 8=1136(LC 1)

FORCES. (lb) - Max. Comp./Max. Ten. - All forces 250 (lb) or less except when shown.
TOP CHORD 2-3=-1920/523, 3-4=-1660/429, 4-5=-1447/418, 5-6=-1447/418, 6-7=-1660/429, 7-8=-1920/523
BOT CHORD 2-13=-473/1691, 11-13=-335/1659, 10-11=-335/1659, 8-10=-386/1691
WEBS 3-13=-296/190, 4-13=-91/490, 5-13=-374/158, 5-10=-374/158, 6-10=-91/490, 7-10=-296/191

NOTES-

1) Unbalanced roof live loads have been considered for this design.
2) Wind: ASCE 7-22; Vult=130mph (3-second gust) Vasd=101mph; TCDL=4.2psf; BCDL=3.0psf; h=20ft; Cat. II; Exp B; Encl., GCpi=0.18; MWFRS (envelope) gable end zone and C-C Zone3 -1-6-0 to 1-6-0, Zone1 1-6-0 to 9-0-0, Zone2 9-0-0 to 13-2-15, Zone1 13-2-15 to 19-6-0, Zone2 19-6-0 to 23-10-7, Zone1 23-10-7 to 30-0-0 zone;C-C for members and forces & MWFRS for reactions shown; Lumber DOL=1.60 plate grip DOL=1.60
3) Building Designer / Project engineer responsible for verifying applied roof live load shown covers rain loading requirements specific to the use of this truss component.
4) Provide adequate drainage to prevent water ponding.
5) This truss has been designed for a 10.0 psf bottom chord live load nonconcurrent with any other live loads.
6) * This truss has been designed for a live load of 20.0psf on the bottom chord in all areas where a rectangle 3-6-0 tall by 2-0-0 wide will fit between the bottom chord and any other members.
7) Provide mechanical connection (by others) of truss to bearing plate capable of withstanding 100 lb uplift at joint(s) except (jt=lb) 2=317, 8=317.

This item has been digitally signed and sealed by ORegan, Philip, PE on the date indicated here. Printed copies of this document are not considered signed and sealed and the signature must be verified on any electronic copies.

Philip J. O'Regan PE No.58126
MiTek Inc. DBA MiTek USA FL Cert 6634
16023 Swingley Ridge Rd. Chesterfield, MO 63017
Date:

December 11,2024

WARNING - Verify design parameters and READ NOTES ON THIS AND INCLUDED MITEK REFERENCE PAGE MII-7473 rev. 1/2/2023 BEFORE USE.

Design valid for use only with MiTek® connectors. This design is based only upon parameters shown, and is for an individual building component, not a truss system. Before use, the building designer must verify the applicability of design parameters and properly incorporate this design into the overall building design. Bracing indicated is to prevent buckling of individual truss web and/or chord members only. Additional temporary and permanent bracing is always required for stability and to prevent collapse with possible personal injury and property damage. For general guidance regarding the fabrication, storage, delivery, erection and bracing of trusses and truss systems, see **ANSI/TPI1 Quality Criteria and DSB-22** available from Truss Plate Institute (www.tpinst.org) and **BCSI Building Component Safety Information** available from the Structural Building Component Association (www.sbcscomponents.com)

MiTek®
16023 Swingley Ridge Rd.
Chesterfield, MO 63017
314.434.1200 / MiTek-US.com

Job	Truss	Truss Type	Qty	Ply	MARTIN - SPEC HSE
4374769	T03	Hip	2	1	T35780191 Job Reference (optional)

Builders FirstSource (Lake City,FL), Lake City, FL - 32055, 8.830 s Nov 8 2024 MiTek Industries, Inc. Tue Dec 10 12:37:37 2024 Page 1
ID:5x40uGjGkkUdz32erCZYBuz1VUH-itP2r3gA2kp71S_tTZ1EvlOeaViQw8lDlZNoSxyAMoC

-1-6-0	5-7-15	11-0-0	17-6-0	22-10-1	28-6-0	30-0-0
1-6-0	5-7-15	5-4-1	6-6-0	5-4-1	5-7-15	1-6-0

Scale = 1:51.3

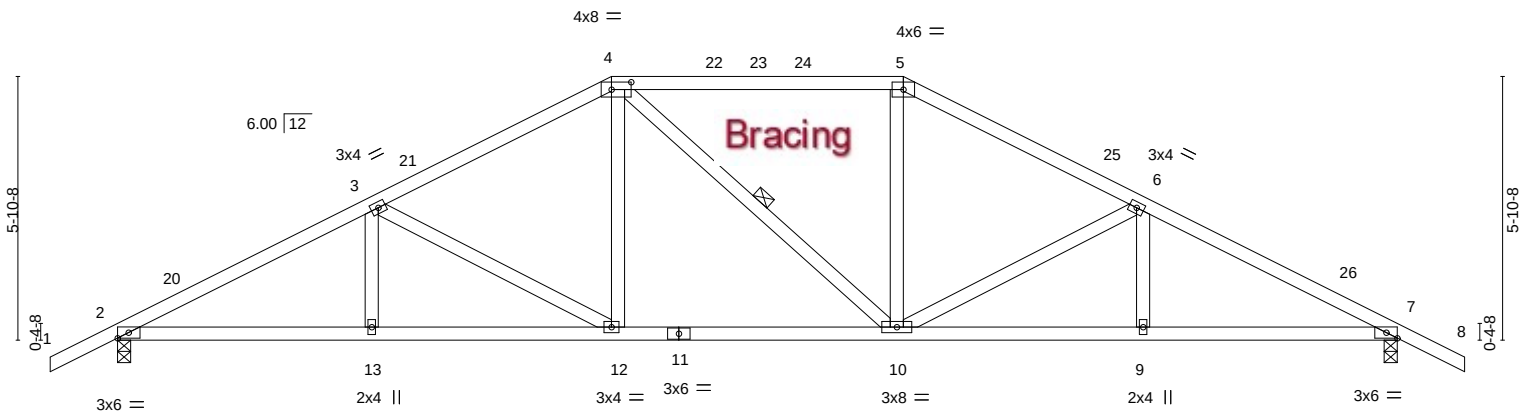

5-7-15	11-0-0	17-6-0	22-10-1	28-6-0
5-7-15	5-4-1	6-6-0	5-4-1	5-7-15

Plate Offsets (X,Y)-- [4:0-5-4,0-2-0], [7:0-2-15,Edge]

LOADING (psf)		**SPACING-** 2-0-0	**CSI.**		**DEFL.** in (loc) l/defl L/d	**PLATES**	**GRIP**
TCLL	20.0	Plate Grip DOL 1.25	TC	0.60	Vert(LL) -0.08 12 >999 240	MT20	244/190
TCDL	7.0	Lumber DOL 1.25	BC	0.49	Vert(CT) -0.18 10-12 >999 180		
BCLL	0.0 *	Rep Stress Incr YES	WB	0.33	Horz(CT) 0.07 7 n/a n/a		
BCDL	10.0	Code FBC2023/TPI2014	Matrix-MS			Weight: 147 lb	FT = 20%

LUMBER-
TOP CHORD 2x4 SP No.2
BOT CHORD 2x4 SP No.2
WEBS 2x4 SP No.3

BRACING-
TOP CHORD Structural wood sheathing directly applied or 3-11-0 oc purlins.
BOT CHORD Rigid ceiling directly applied or 8-8-9 oc bracing.
WEBS 1 Row at midpt 4-10

REACTIONS. (size) 2=0-3-8, 7=0-3-8
Max Horz 2=105(LC 12)
Max Uplift 2=-314(LC 12), 7=-314(LC 13)
Max Grav 2=1136(LC 1), 7=1136(LC 1)

FORCES. (lb) - Max. Comp./Max. Ten. - All forces 250 (lb) or less except when shown.
TOP CHORD 2-3=-1943/491, 3-4=-1507/392, 4-5=-1296/390, 5-6=-1508/392, 6-7=-1943/491
BOT CHORD 2-13=-454/1686, 12-13=-454/1686, 10-12=-258/1296, 9-10=-350/1686, 7-9=-350/1686
WEBS 3-12=-455/224, 4-12=-68/394, 5-10=-59/395, 6-10=-454/225

NOTES-
1) Unbalanced roof live loads have been considered for this design.
2) Wind: ASCE 7-22; Vult=130mph (3-second gust) Vasd=101mph; TCDL=4.2psf; BCDL=3.0psf; h=20ft; Cat. II; Exp B; Encl., GCpi=0.18; MWFRS (envelope) gable end zone and C-C Zone3 -1-6-0 to 1-6-0, Zone1 1-6-0 to 11-0-0, Zone2 11-0-0 to 15-2-15, Zone1 15-2-15 to 17-6-0, Zone2 17-6-0 to 21-8-15, Zone1 21-8-15 to 30-0-0 zone;C-C for members and forces & MWFRS for reactions shown; Lumber DOL=1.60 plate grip DOL=1.60
3) Building Designer / Project engineer responsible for verifying applied roof live load shown covers rain loading requirements specific to the use of this truss component.
4) Provide adequate drainage to prevent water ponding.
5) This truss has been designed for a 10.0 psf bottom chord live load nonconcurrent with any other live loads.
6) * This truss has been designed for a live load of 20.0psf on the bottom chord in all areas where a rectangle 3-6-0 tall by 2-0-0 wide will fit between the bottom chord and any other members.
7) Provide mechanical connection (by others) of truss to bearing plate capable of withstanding 100 lb uplift at joint(s) except (jt=lb) 2=314, 7=314.

This item has been digitally signed and sealed by ORegan, Philip, PE on the date indicated here. Printed copies of this document are not considered signed and sealed and the signature must be verified on any electronic copies.

Philip J. O'Regan PE No.58126
MiTek Inc. DBA MiTek USA FL Cert 6634
16023 Swingley Ridge Rd. Chesterfield, MO 63017
Date:

December 11,2024

WARNING - Verify design parameters and READ NOTES ON THIS AND INCLUDED MITEK REFERENCE PAGE MII-7473 rev. 1/2/2023 BEFORE USE.
Design valid for use only with MiTek® connectors. This design is based only upon parameters shown, and is for an individual building component, not a truss system. Before use, the building designer must verify the applicability of design parameters and properly incorporate this design into the overall building design. Bracing indicated is to prevent buckling of individual truss web and/or chord members only. Additional temporary and permanent bracing is always required for stability and to prevent collapse with possible personal injury and property damage. For general guidance regarding the fabrication, storage, delivery, erection and bracing of trusses and truss systems, see **ANSI/TPI1 Quality Criteria and DSB-22** available from Truss Plate Institute (www.tpinst.org) and **BCSI Building Component Safety Information** available from the Structural Building Component Association (www.sbcscomponents.com)

MiTek®
16023 Swingley Ridge Rd.
Chesterfield, MO 63017
314.434.1200 / MiTek-US.com

Job	Truss	Truss Type	Qty	Ply	MARTIN - SPEC HSE
4374769	T04	Hip	2	1	T35780192 Job Reference (optional)

Builders FirstSource (Lake City,FL), Lake City, FL - 32055, 8.830 s Nov 8 2024 MiTek Industries, Inc. Tue Dec 10 12:37:38 2024 Page 1
ID:5x40uGjGkkUdz32erCZYBuz1VUH-A4zR3Phop2x_fcZ41HZTSzwrbv08fXxN_D7M?NyAMoB

-1-6-0	6-10-2	13-0-0	15-6-0	21-7-14	28-6-0
1-6-0	6-10-2	6-1-14	2-6-0	6-1-14	6-10-2

Scale = 1:50.9

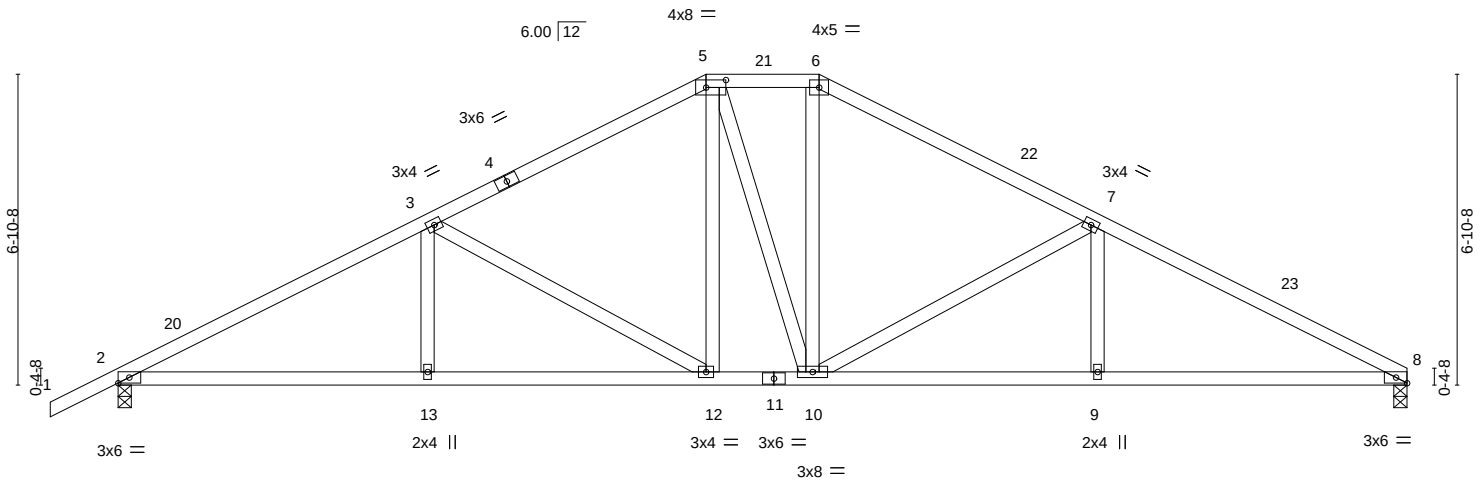

6-10-2	13-0-0	15-6-0	21-7-14	28-6-0
6-10-2	6-1-14	2-6-0	6-1-14	6-10-2

Plate Offsets (X,Y)-- [5:0-5-4,0-2-0], [8:0-2-15,Edge]

LOADING (psf)		**SPACING-** 2-0-0	**CSI.**		**DEFL.**	in	(loc)	l/defl	L/d	**PLATES**	**GRIP**
TCLL	20.0	Plate Grip DOL 1.25	TC	0.45	Vert(LL)	-0.08	12	>999	240	MT20	244/190
TCDL	7.0	Lumber DOL 1.25	BC	0.59	Vert(CT)	-0.18	12-13	>999	180		
BCLL	0.0 *	Rep Stress Incr YES	WB	0.59	Horz(CT)	0.07	8	n/a	n/a		
BCDL	10.0	Code FBC2023/TPI2014	Matrix-MS							Weight: 151 lb	FT = 20%

LUMBER-
TOP CHORD 2x4 SP No.2
BOT CHORD 2x4 SP No.2
WEBS 2x4 SP No.3

BRACING-
TOP CHORD Structural wood sheathing directly applied or 3-9-4 oc purlins.
BOT CHORD Rigid ceiling directly applied or 8-7-8 oc bracing.

REACTIONS. (size) 8=0-3-8, 2=0-3-8
Max Horz 2=134(LC 16)
Max Uplift 8=-272(LC 13), 2=-311(LC 12)
Max Grav 8=1052(LC 1), 2=1138(LC 1)

FORCES. (lb) - Max. Comp./Max. Ten. - All forces 250 (lb) or less except when shown.
TOP CHORD 2-3=-1907/469, 3-5=-1356/349, 5-6=-1145/356, 6-7=-1358/352, 7-8=-1919/479
BOT CHORD 2-13=-452/1645, 12-13=-452/1645, 10-12=-213/1143, 9-10=-353/1658, 8-9=-353/1658
WEBS 3-13=0/283, 3-12=-587/275, 5-12=-104/363, 6-10=-103/366, 7-10=-600/285, 7-9=0/283

NOTES-
1) Unbalanced roof live loads have been considered for this design.
2) Wind: ASCE 7-22; Vult=130mph (3-second gust) Vasd=101mph; TCDL=4.2psf; BCDL=3.0psf; h=20ft; Cat. II; Exp B; Encl., GCpi=0.18; MWFRS (envelope) gable end zone and C-C Zone3 -1-6-0 to 1-6-0, Zone1 1-6-0 to 13-0-0, Zone3 13-0-0 to 15-6-0, Zone2 15-6-0 to 19-8-15, Zone1 19-8-15 to 28-6-0 zone;C-C for members and forces & MWFRS for reactions shown; Lumber DOL=1.60 plate grip DOL=1.60
3) Building Designer / Project engineer responsible for verifying applied roof live load shown covers rain loading requirements specific to the use of this truss component.
4) Provide adequate drainage to prevent water ponding.
5) This truss has been designed for a 10.0 psf bottom chord live load nonconcurrent with any other live loads.
6) * This truss has been designed for a live load of 20.0psf on the bottom chord in all areas where a rectangle 3-6-0 tall by 2-0-0 wide will fit between the bottom chord and any other members.
7) Provide mechanical connection (by others) of truss to bearing plate capable of withstanding 100 lb uplift at joint(s) except (jt=lb) 8=272, 2=311.

This item has been digitally signed and sealed by ORegan, Philip, PE on the date indicated here. Printed copies of this document are not considered signed and sealed and the signature must be verified on any electronic copies.

Philip J. O'Regan PE No.58126
MiTek Inc. DBA MiTek USA FL Cert 6634
16023 Swingley Ridge Rd. Chesterfield, MO 63017
Date:

December 11,2024

WARNING - Verify design parameters and READ NOTES ON THIS AND INCLUDED MITEK REFERENCE PAGE MII-7473 rev. 1/2/2023 BEFORE USE.
Design valid for use only with MiTek® connectors. This design is based only upon parameters shown, and is for an individual building component, not a truss system. Before use, the building designer must verify the applicability of design parameters and properly incorporate this design into the overall building design. Bracing indicated is to prevent buckling of individual truss web and/or chord members only. Additional temporary and permanent bracing is always required for stability and to prevent collapse with possible personal injury and property damage. For general guidance regarding the fabrication, storage, delivery, erection and bracing of trusses and truss systems, see **ANSI/TPI1 Quality Criteria and DSB-22** available from Truss Plate Institute (www.tpinst.org) and **BCSI Building Component Safety Information** available from the Structural Building Component Association (www.sbcscomponents.com)

MiTek®
16023 Swingley Ridge Rd.
Chesterfield, MO 63017
314.434.1200 / MiTek-US.com

Job	Truss	Truss Type	Qty	Ply	MARTIN - SPEC HSE
4374769	T05	Common	9	1	T35780193 Job Reference (optional)

Builders FirstSource (Lake City,FL), Lake City, FL - 32055, 8.830 s Nov 8 2024 MiTek Industries, Inc. Tue Dec 10 12:37:38 2024 Page 1
ID:5x40uGjGkkUdz32erCZYBuz1VUH-A4zR3Phop2x_fcZ41HZTSzwpQvwqfcbN_D7M?NyAMoB

-1-6-0 | 7-2-0 | 14-3-0 | 21-4-0 | 28-6-0
1-6-0 | 7-2-0 | 7-1-0 | 7-1-0 | 7-2-0

Scale = 1:49.6

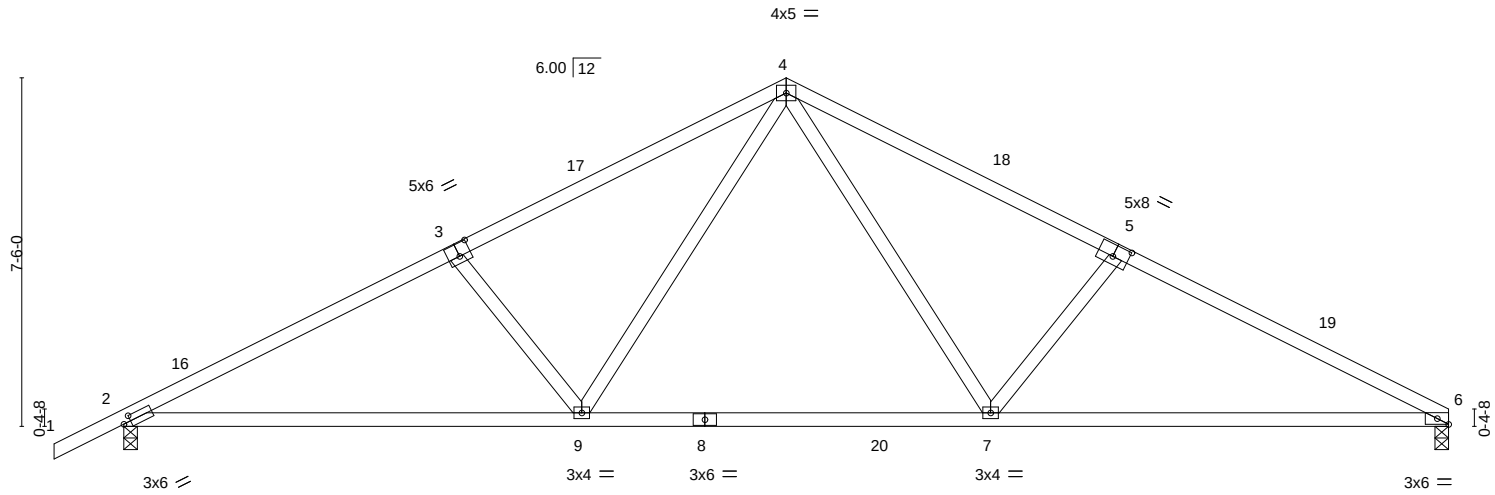

9-10-4 | 18-7-12 | 28-6-0
9-10-4 | 8-9-9 | 9-10-4

Plate Offsets (X,Y)-- [2:0-1-15,0-1-8], [3:0-3-0,0-3-4], [5:0-4-0,0-3-0], [6:0-2-15,Edge]

LOADING (psf)		SPACING- 2-0-0		CSI.		DEFL.	in	(loc)	l/defl	L/d	PLATES	GRIP
TCLL	20.0	Plate Grip DOL	1.25	TC	0.59	Vert(LL)	-0.21	9-12	>999	240	MT20	244/190
TCDL	7.0	Lumber DOL	1.25	BC	0.99	Vert(CT)	-0.44	9-12	>771	180		
BCLL	0.0 *	Rep Stress Incr	YES	WB	0.29	Horz(CT)	0.06	6	n/a	n/a		
BCDL	10.0	Code FBC2023/TPI2014		Matrix-MS							Weight: 130 lb	FT = 20%

LUMBER-
TOP CHORD 2x4 SP No.2
BOT CHORD 2x4 SP No.2 *Except*
6-8: 2x4 SP No.1
WEBS 2x4 SP No.3

BRACING-
TOP CHORD Structural wood sheathing directly applied or 3-4-9 oc purlins.
BOT CHORD Rigid ceiling directly applied or 2-2-0 oc bracing.

REACTIONS. (size) 2=0-3-8, 6=0-3-8
Max Horz 2=144(LC 16)
Max Uplift 2=-309(LC 12), 6=-270(LC 13)
Max Grav 2=1221(LC 2), 6=1152(LC 2)

FORCES. (lb) - Max. Comp./Max. Ten. - All forces 250 (lb) or less except when shown.
TOP CHORD 2-3=-1984/470, 3-4=-1808/448, 4-5=-1817/454, 5-6=-1993/477
BOT CHORD 2-9=-460/1745, 7-9=-186/1158, 6-7=-349/1754
WEBS 4-7=-213/769, 5-7=-409/283, 4-9=-206/755, 3-9=-405/280

NOTES-
1) Unbalanced roof live loads have been considered for this design.
2) Wind: ASCE 7-22; Vult=130mph (3-second gust) Vasd=101mph; TCDL=4.2psf; BCDL=3.0psf; h=20ft; Cat. II; Exp B; Encl., GCpi=0.18; MWFRS (envelope) gable end zone and C-C Zone3 -1-6-0 to 1-6-0, Zone1 1-6-0 to 14-3-0, Zone2 14-3-0 to 18-5-15, Zone1 18-5-15 to 28-6-0 zone;C-C for members and forces & MWFRS for reactions shown; Lumber DOL=1.60 plate grip DOL=1.60
3) Building Designer / Project engineer responsible for verifying applied roof live load shown covers rain loading requirements specific to the use of this truss component.
4) This truss has been designed for a 10.0 psf bottom chord live load nonconcurrent with any other live loads.
5) * This truss has been designed for a live load of 20.0psf on the bottom chord in all areas where a rectangle 3-6-0 tall by 2-0-0 wide will fit between the bottom chord and any other members, with BCDL = 10.0psf.
6) Provide mechanical connection (by others) of truss to bearing plate capable of withstanding 100 lb uplift at joint(s) except (jt=lb) 2=309, 6=270.

This item has been digitally signed and sealed by ORegan, Philip, PE on the date indicated here. Printed copies of this document are not considered signed and sealed and the signature must be verified on any electronic copies.

Philip J. O'Regan PE No.58126
MiTek Inc. DBA MiTek USA FL Cert 6634
16023 Swingley Ridge Rd. Chesterfield, MO 63017
Date:

December 11,2024

WARNING - Verify design parameters and READ NOTES ON THIS AND INCLUDED MITEK REFERENCE PAGE MII-7473 rev. 1/2/2023 BEFORE USE.
Design valid for use only with MiTek® connectors. This design is based only upon parameters shown, and is for an individual building component, not a truss system. Before use, the building designer must verify the applicability of design parameters and properly incorporate this design into the overall building design. Bracing indicated is to prevent buckling of individual truss web and/or chord members only. Additional temporary and permanent bracing is always required for stability and to prevent collapse with possible personal injury and property damage. For general guidance regarding the fabrication, storage, delivery, erection and bracing of trusses and truss systems, see **ANSI/TPI1 Quality Criteria and DSB-22** available from Truss Plate Institute (www.tpinst.org) and **BCSI Building Component Safety Information** available from the Structural Building Component Association (www.sbcscomponents.com)

MiTek®
16023 Swingley Ridge Rd.
Chesterfield, MO 63017
314.434.1200 / MiTek-US.com

Job	Truss	Truss Type	Qty	Ply	MARTIN - SPEC HSE
4374769	T06	Common	3	1	T35780194 Job Reference (optional)

Builders FirstSource (Lake City,FL), Lake City, FL - 32055, 8.830 s Nov 8 2024 MiTek Industries, Inc. Tue Dec 10 12:37:39 2024 Page 1
ID:5x40uGjGkkUdz32erCZYBuz1VUH-fGWpGlhRaM3rGm7Gb_4i_AT2_JKDO5RWDtsvXqyAMoA

-1-6-0	4-7-5	9-0-0	13-4-11	18-0-0	19-6-0
1-6-0	4-7-5	4-4-11	4-4-11	4-7-5	1-6-0

Scale = 1:33.9

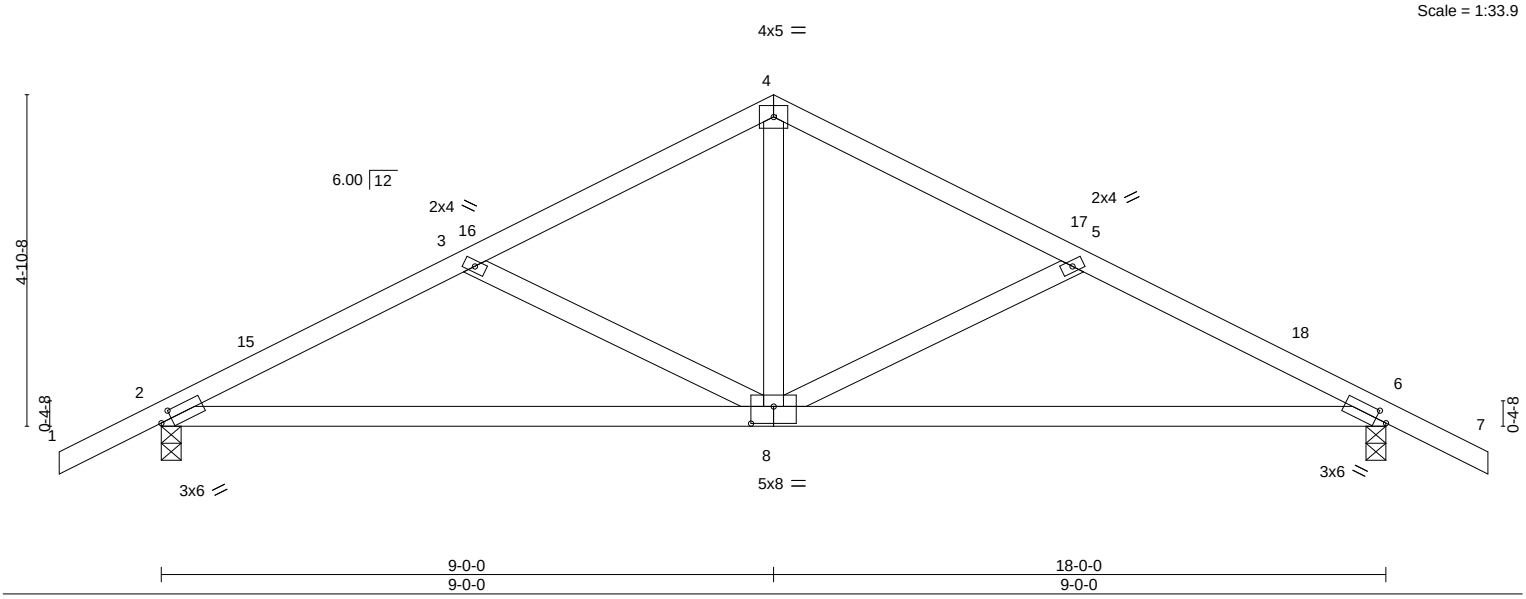

Plate Offsets (X,Y)-- [2:0-1-15,0-1-8], [6:0-1-15,0-1-8], [8:0-4-0,0-3-0]

LOADING (psf)		SPACING- 2-0-0		CSI.		DEFL.	in	(loc)	l/defl	L/d	PLATES	GRIP
TCLL	20.0	Plate Grip DOL	1.25	TC	0.35	Vert(LL)	0.11	8-11	>999	240	MT20	244/190
TCDL	7.0	Lumber DOL	1.25	BC	0.73	Vert(CT)	-0.22	8-11	>994	180		
BCLL	0.0 *	Rep Stress Incr	YES	WB	0.19	Horz(CT)	0.02	6	n/a	n/a		
BCDL	10.0	Code FBC2023/TPI2014		Matrix-MS							Weight: 83 lb	FT = 20%

LUMBER-
TOP CHORD 2x4 SP No.2
BOT CHORD 2x4 SP No.2
WEBS 2x4 SP No.3

BRACING-
TOP CHORD Structural wood sheathing directly applied or 5-5-5 oc purlins.
BOT CHORD Rigid ceiling directly applied or 8-3-12 oc bracing.

REACTIONS. (size) 2=0-3-8, 6=0-3-8
Max Horz 2=88(LC 16)
Max Uplift 2=-228(LC 9), 6=-228(LC 8)
Max Grav 2=747(LC 1), 6=747(LC 1)

FORCES. (lb) - Max. Comp./Max. Ten. - All forces 250 (lb) or less except when shown.
TOP CHORD 2-3=-1096/592, 3-4=-827/491, 4-5=-827/491, 5-6=-1096/591
BOT CHORD 2-8=-457/959, 6-8=-478/959
WEBS 4-8=-325/503, 5-8=-319/208, 3-8=-319/208

NOTES-
1) Unbalanced roof live loads have been considered for this design.
2) Wind: ASCE 7-22; Vult=130mph (3-second gust) Vasd=101mph; TCDL=4.2psf; BCDL=3.0psf; h=20ft; Cat. II; Exp B; Encl., GCpi=0.18; MWFRS (envelope) gable end zone and C-C Zone3 -1-6-0 to 1-6-0, Zone1 1-6-0 to 9-0-0, Zone2 9-0-0 to 13-2-15, Zone1 13-2-15 to 19-6-0 zone; porch left and right exposed;C-C for members and forces & MWFRS for reactions shown; Lumber DOL=1.60 plate grip DOL=1.60
3) Building Designer / Project engineer responsible for verifying applied roof live load shown covers rain loading requirements specific to the use of this truss component.
4) This truss has been designed for a 10.0 psf bottom chord live load nonconcurrent with any other live loads.
5) * This truss has been designed for a live load of 20.0psf on the bottom chord in all areas where a rectangle 3-6-0 tall by 2-0-0 wide will fit between the bottom chord and any other members.
6) Provide mechanical connection (by others) of truss to bearing plate capable of withstanding 100 lb uplift at joint(s) except (jt=lb) 2=228, 6=228.

This item has been digitally signed and sealed by ORegan, Philip, PE on the date indicated here. Printed copies of this document are not considered signed and sealed and the signature must be verified on any electronic copies.

Philip J. O'Regan PE No.58126
MiTek Inc. DBA MiTek USA FL Cert 6634
16023 Swingley Ridge Rd. Chesterfield, MO 63017
Date:

December 11,2024

WARNING - Verify design parameters and READ NOTES ON THIS AND INCLUDED MITEK REFERENCE PAGE MII-7473 rev. 1/2/2023 BEFORE USE.
Design valid for use only with MiTek® connectors. This design is based only upon parameters shown, and is for an individual building component, not a truss system. Before use, the building designer must verify the applicability of design parameters and properly incorporate this design into the overall building design. Bracing indicated is to prevent buckling of individual truss web and/or chord members only. Additional temporary and permanent bracing is always required for stability and to prevent collapse with possible personal injury and property damage. For general guidance regarding the fabrication, storage, delivery, erection and bracing of trusses and truss systems, see **ANSI/TPI1 Quality Criteria and DSB-22** available from Truss Plate Institute (www.tpinst.org) and **BCSI Building Component Safety Information** available from the Structural Building Component Association (www.sbcscomponents.com)

MiTek®
16023 Swingley Ridge Rd.
Chesterfield, MO 63017
314.434.1200 / MiTek-US.com

Job	Truss	Truss Type	Qty	Ply	MARTIN - SPEC HSE
4374769	T06G	GABLE	1	1	T35780195 Job Reference (optional)

Builders FirstSource (Lake City,FL), Lake City, FL - 32055, 8.830 s Nov 8 2024 MiTek Industries, Inc. Tue Dec 10 12:37:40 2024 Page 1
ID:5x40uGjGkkUdz32erCZYBuz1VUH-7S4BU5i3LfBiuviS9ibxXO0BLjgR7XYfRXcS3GyAMo9

-1-6-0	4-7-5	9-0-0	13-4-11	18-0-0	19-6-0
1-6-0	4-7-5	4-4-11	4-4-11	4-7-5	1-6-0

Scale = 1:34.8

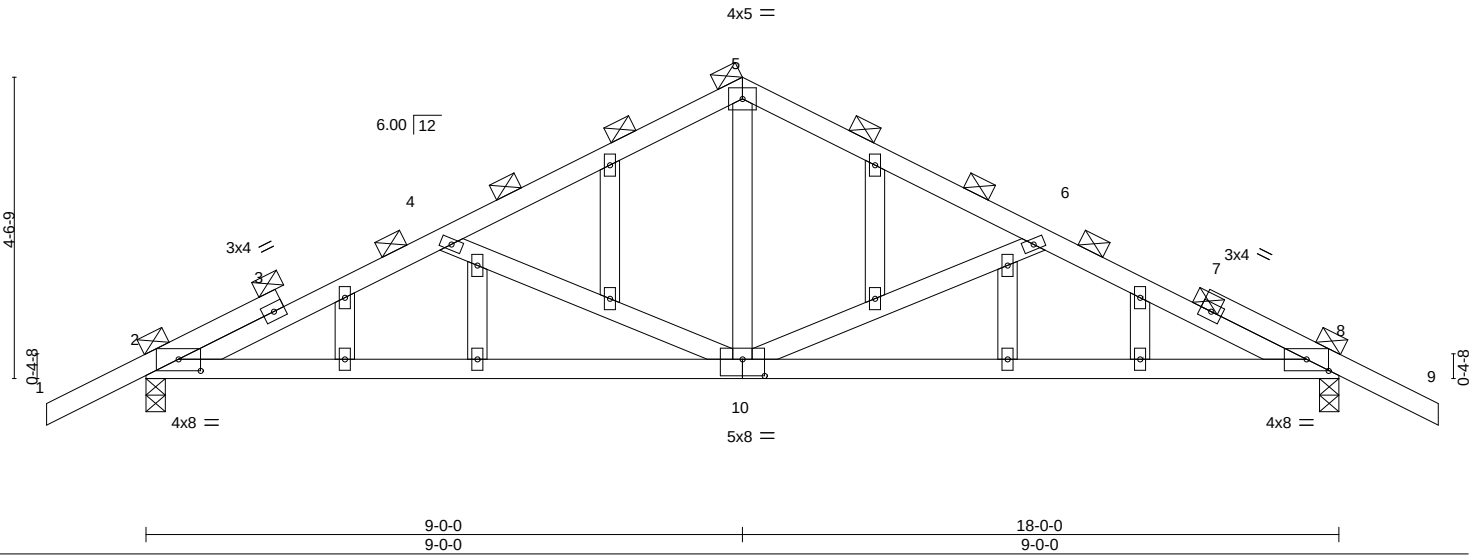

Plate Offsets (X,Y)-- [2:0-4-0,0-2-1], [8:0-4-0,0-2-1], [10:0-4-0,0-3-0]

LOADING (psf)		SPACING- 2-0-0		CSI.		DEFL.	in	(loc)	l/defl	L/d	PLATES	GRIP
TCLL	20.0	Plate Grip DOL	1.25	TC	0.50	Vert(LL)	0.10	10-25	>999	240	MT20	244/190
TCDL	7.0	Lumber DOL	1.25	BC	0.66	Vert(CT)	-0.19	10-25	>999	180		
BCLL	0.0 *	Rep Stress Incr	YES	WB	0.20	Horz(CT)	0.02	8	n/a	n/a		
BCDL	10.0	Code FBC2023/TPI2014		Matrix-MS							Weight: 101 lb	FT = 20%

LUMBER-
TOP CHORD 2x4 SP No.2
BOT CHORD 2x4 SP No.2
WEBS 2x4 SP No.3
OTHERS 2x4 SP No.3

BRACING-
TOP CHORD 2-0-0 oc purlins (4-7-1 max.).
BOT CHORD Rigid ceiling directly applied or 7-0-1 oc bracing.

REACTIONS. (size) 2=0-3-8, 8=0-3-8
Max Horz 2=82(LC 12)
Max Uplift 2=-227(LC 9), 8=-227(LC 8)
Max Grav 2=744(LC 1), 8=744(LC 1)

FORCES. (lb) - Max. Comp./Max. Ten. - All forces 250 (lb) or less except when shown.
TOP CHORD 2-4=-1179/807, 4-5=-856/612, 5-6=-856/612, 6-8=-1179/807
BOT CHORD 2-10=-667/1077, 8-10=-677/1077
WEBS 4-10=-399/329, 5-10=-403/525, 6-10=-399/329

NOTES-
1) Unbalanced roof live loads have been considered for this design.
2) Wind: ASCE 7-22; Vult=130mph (3-second gust) Vasd=101mph; TCDL=4.2psf; BCDL=3.0psf; h=20ft; Cat. II; Exp B; Encl., GCpi=0.18; MWFRS (envelope) gable end zone and C-C Zone3 zone; porch left and right exposed;C-C for members and forces & MWFRS for reactions shown; Lumber DOL=1.60 plate grip DOL=1.60
3) Truss designed for wind loads in the plane of the truss only. For studs exposed to wind (normal to the face), see Standard Industry Gable End Details as applicable, or consult qualified building designer as per ANSI/TPI 1.
4) Building Designer / Project engineer responsible for verifying applied roof live load shown covers rain loading requirements specific to the use of this truss component.
5) All plates are 2x4 MT20 unless otherwise indicated.
6) Gable studs spaced at 2-0-0 oc.
7) This truss has been designed for a 10.0 psf bottom chord live load nonconcurrent with any other live loads.
8) * This truss has been designed for a live load of 20.0psf on the bottom chord in all areas where a rectangle 3-6-0 tall by 2-0-0 wide will fit between the bottom chord and any other members.
9) Provide mechanical connection (by others) of truss to bearing plate capable of withstanding 100 lb uplift at joint(s) except (jt=lb) 2=227, 8=227.
10) Graphical purlin representation does not depict the size or the orientation of the purlin along the top and/or bottom chord.

This item has been digitally signed and sealed by ORegan, Philip, PE on the date indicated here. Printed copies of this document are not considered signed and sealed and the signature must be verified on any electronic copies.

Philip J. O'Regan PE No.58126
MiTek Inc. DBA MiTek USA FL Cert 6634
16023 Swingley Ridge Rd. Chesterfield, MO 63017
Date:

December 11,2024

WARNING - Verify design parameters and READ NOTES ON THIS AND INCLUDED MITEK REFERENCE PAGE MII-7473 rev. 1/2/2023 BEFORE USE.
Design valid for use only with MiTek® connectors. This design is based only upon parameters shown, and is for an individual building component, not a truss system. Before use, the building designer must verify the applicability of design parameters and properly incorporate this design into the overall building design. Bracing indicated is to prevent buckling of individual truss web and/or chord members only. Additional temporary and permanent bracing is always required for stability and to prevent collapse with possible personal injury and property damage. For general guidance regarding the fabrication, storage, delivery, erection and bracing of trusses and truss systems, see **ANSI/TPI1 Quality Criteria and DSB-22** available from Truss Plate Institute (www.tpinst.org) and **BCSI Building Component Safety Information** available from the Structural Building Component Association (www.sbcscomponents.com)

MiTek®
16023 Swingley Ridge Rd.
Chesterfield, MO 63017
314.434.1200 / MiTek-US.com

Symbols

PLATE LOCATION AND ORIENTATION

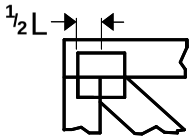

Center plate on joint unless x, y offsets are indicated. Dimensions are in ft-in-sixteenths. Apply plates to both sides of truss and fully embed teeth.

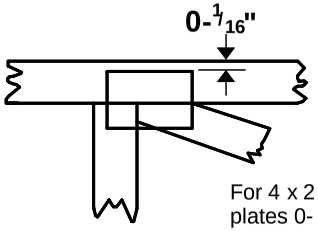

For 4 x 2 orientation, locate plates 0- 1/16" from outside edge of truss.

This symbol indicates the required direction of slots in connector plates.

* Plate location details available in MiTek software or upon request.

PLATE SIZE

4 x 4

The first dimension is the plate width measured perpendicular to slots. Second dimension is the length parallel to slots.

LATERAL BRACING LOCATION

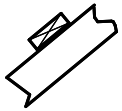

Indicated by symbol shown and/or by text in the bracing section of the output. Use T or I bracing if indicated.

BEARING

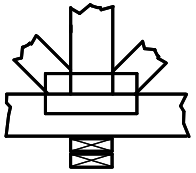

Indicates location where bearings (supports) occur. Icons vary but reaction section indicates joint number/letter where bearings occur. Min size shown is for crushing only.

Industry Standards:

ANSI/TPI1: National Design Specification for Metal Plate Connected Wood Truss Construction.
DSB-22: Design Standard for Bracing.
BCSI: Building Component Safety Information, Guide to Good Practice for Handling, Installing, Restraining & Bracing of Metal Plate Connected Wood Trusses.

Numbering System

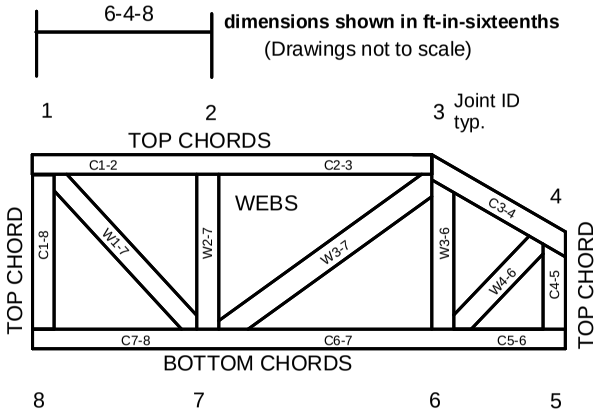

JOINTS ARE GENERALLY NUMBERED/LETTERED CLOCKWISE AROUND THE TRUSS STARTING AT THE JOINT FARTHEST TO THE LEFT.

CHORDS AND WEBS ARE IDENTIFIED BY END JOINT NUMBERS/LETTERS.

Product Code Approvals

ICC-ES Reports:

ESR-1988, ESR-2362, ESR-2685, ESR-3282
ESR-4722, ESL-1388

Design General Notes

Trusses are designed for wind loads in the plane of the truss unless otherwise shown.

Lumber design values are in accordance with ANSI/TPI 1 section 6.3 These truss designs rely on lumber values established by others.

© 2023 MiTek® All Rights Reserved

MiTek®

General Safety Notes

Failure to Follow Could Cause Property Damage or Personal Injury

1. Additional stability bracing for truss system, e.g. diagonal or X-bracing, is always required. See BCSI.
2. Truss bracing must be designed by an engineer. For wide truss spacing, individual lateral braces themselves may require bracing, or alternative Tor I bracing should be considered.
3. Never exceed the design loading shown and never stack materials on inadequately braced trusses.
4. Provide copies of this truss design to the building designer, erection supervisor, property owner and all other interested parties.
5. Cut members to bear tightly against each other.
6. Place plates on each face of truss at each joint and embed fully. Knots and wane at joint locations are regulated by ANSI/TPI 1.
7. Design assumes trusses will be suitably protected from the environment in accord with ANSI/TPI 1.
8. Unless otherwise noted, moisture content of lumber shall not exceed 19% at time of fabrication.
9. Unless expressly noted, this design is not applicable for use with fire retardant, preservative treated, or green lumber.
10. Camber is a non-structural consideration and is the responsibility of truss fabricator. General practice is to camber for dead load deflection.
11. Plate type, size, orientation and location dimensions indicated are minimum plating requirements.
12. Lumber used shall be of the species and size, and in all respects, equal to or better than that specified.
13. Top chords must be sheathed or purlins provided at spacing indicated on design.
14. Bottom chords require lateral bracing at 10 ft. spacing, or less, if no ceiling is installed, unless otherwise noted.
15. Connections not shown are the responsibility of others.
16. Do not cut or alter truss member or plate without prior approval of an engineer.
17. Install and load vertically unless indicated otherwise.
18. Use of green or treated lumber may pose unacceptable environmental, health or performance risks. Consult with project engineer before use.
19. Review all portions of this design (front, back, words and pictures) before use. Reviewing pictures alone is not sufficient.
20. Design assumes manufacture in accordance with ANSI/TPI 1 Quality Criteria.
21. The design does not take into account any dynamic or other loads other than those expressly stated.