ITW Building Components Group, Inc.

1950 Marley Drive Haines City, FL 33844
Florida Engineering Certificate of Authorization Number 0 278
Florida Certificate of Product Approval # FL1999
Page 1 of 1 Document ID 1UVI487-Z0519091900

WILLIAM H. KRICK
LICENSE
No. 70861
STATE OF
FLORIDA
PROFESSIONAL ENGINEER
04/19/2013

Truss Fabricator	Anderson Truss Company
Job Identification	13-097--BRYAN ZECHER Mowry Residence -- SW Dusk Glen Rd. Lake City, FL 32024
Truss Count	62
Model Code	Florida Building Code 2010
Truss Criteria	FBC2010Res/TPI-2007(STD)
Engineering Software	Alpine Software,Version 12.03.
Structural Engineer of Record	The identity of the structural EOR did not exist as of
Address	the seal date per section 61G15-31.003(5a) of the FAC
Minimum Design Loads	Roof - 37.0 PSF @ 1.25 Duration
	Floor - N/A
	Wind - 120 MPH ASCE 7-10 -Closed

Notes

1. Determination as to the suitability of these truss components for the structure is the responsibility of the building designer/engineer of record, as defined in ANSI/TPI 1
2. The drawing date shown on this index sheet must match the date shown on the individual truss component drawing.
3. As shown on attached drawings; the drawing number is preceded by: HCUSR487

William H Krick
-Truss Design Engineer-

1950 Marley Drive
Haines City, FL 33844

Details: BRCLBSUB-PB140-12015EC1-GBLLETIN-GABRST10-12030EC1-CNNAILSP-

#	Ref Description	Drawing#	Date
1	40048--B 24' Common	13109001	04/19/13
2	40049--BM 9'8" Mono	13109002	04/19/13
3	40050--BM1 9'8" Mono	13109003	04/19/13
4	40051-C 41'4"8 Special	13109004	04/19/13
5	40052-C1 41'4"8 Specia	13109005	04/19/13
6	40053-C2 41'4"8 Specia	13109006	04/19/13
7	40054-C3 41'4"8 Specia	13109007	04/19/13
8	40055-C4 40' Stepdown	13109008	04/19/13
9	40056-C5 40' Stepdown	13109009	04/19/13
10	40057-C6 36' Stepdown	13109010	04/19/13
11	40058-C7 40' Stepdown	13109011	04/19/13
12	40059--CJ1 1' Jack	13109012	04/19/13
13	40060--CJ3 3' Jack	13109013	04/19/13
14	40061--CJ5 5' Jack	13109014	04/19/13
15	40062--CJ5B 5' Jack	13109015	04/19/13
16	40063--CJ5T 5' Jack	13109016	04/19/13
17	40064-CPB 8'7"14 Commo	13109017	04/19/13
18	40065-CPB1 8'7"14 Step	13109018	04/19/13
19	40066--D 10'4" Common	13109060	04/19/13
20	40067--D1 10'4" Common	13109019	04/19/13
21	40068--D2 10'4" Common	13109020	04/19/13
22	40069--D3 10'4" Common	13109021	04/19/13
23	40070--D4 10'4" Common	13109022	04/19/13
24	40071--D5 10'4" Common	13109023	04/19/13
25	40072--D6 10'4" Common	13109024	04/19/13
26	40073--DDG 10'4" Gable	13109025	04/19/13
27	40074--EJ7 7' End Jack	13109061	04/19/13
28	40075-EJ7B 7' End Jack	13109026	04/19/13
29	40076-EJ7G 7' End Jack	13109027	04/19/13
30	40077-EJ7T 7' End Jack	13109062	04/19/13
31	40078-EJ7T1 7' End Jac	13109028	04/19/13
32	40079-EJ7X 7' End Jack	13109029	04/19/13
33	40080--F 9'4" Common	13109030	04/19/13
34	40081--F1 9'4" Common	13109031	04/19/13
35	40082--FDG 9'4" Gable	13109032	04/19/13
36	40083--G 3' Common	13109033	04/19/13
37	40084--G1 4' Common	13109034	04/19/13
38	40085--G1GE 4' Gable	13109035	04/19/13
39	40086--GGE 3' Gable	13109036	04/19/13
40	40087-H11A 28' Stepdow	13109037	04/19/13
41	40088-H11B 24' Stepdow	13109038	04/19/13
42	40089-H11C 42'8"5 Mono	13109039	04/19/13
43	40090-H11CS 40' Stepdo	13109040	04/19/13
44	40091-H13C 42'8"5 Mono	13109041	04/19/13
45	40092-H13CS 40' Stepdo	13109042	04/19/13
46	40093-H15C 41'4"8 Step	13109043	04/19/13
47	40094-H15CS 40' Stepdo	13109044	04/19/13
48	40095-H17C 41'4"8 Step	13109045	04/19/13
49	40096-H17CT 40' Stepdo	13109046	04/19/13
50	40097-H19C 41'4"8 Spec	13109047	04/19/13
51	40098-H19CT 40' Stepdo	13109048	04/19/13
52	40099-H7A 28' Stepdown	13109049	04/19/13
53	40100-H7B 24' Stepdown	13109050	04/19/13
54	40101-H7BG 24' Stepdow	13109051	04/19/13
55	40102-H7C 46'6"5 Flat	13109052	04/19/13
56	40103-H7CS 28' Stepdow	13109053	04/19/13
57	40104-H9A 28' Stepdown	13109054	04/19/13
58	40105-H9B 24' Stepdown	13109055	04/19/13
59	40106--H9C 46'6"5 Flat	13109056	04/19/13
60	40107-H9CS 28' Stepdow	13109057	04/19/13
61	40108-HJ7 9'10"13 Hip	13109058	04/19/13
62	40109-HJ7T 9'10"13 Hip	13109059	04/19/13

ALPIN

COLUMBIA COUNTY BUILDING DEPARTMENT
Received for
FILE COPY
Code Compliance
PLANS EXAMINER

(13-097--BRYAN ZECHER Mowry Residence -- SW Dusk Glen Rd Lake City, FL 32024 - B 24' Common)

THIS DWG PREPARED FROM COMPUTER INPUT (LOADS & DIMENSIONS) SUBMITTED BY TRUSS MFR

Top chord 2x4 SP_#1_12A
Bot chord 2x4 SP_#1_12A
Webs 2x4 SP_#3__12A

Lumber grades designated with "12A" use design values approved 1/5/2012 by ALSC

Truss passed check for 20 psf additional bottom chord live load in areas with 42"-high x 24"-wide clearance

MWFRS loads based on trusses located at least 15 00 ft from roof edge

120 mph wind, 15 00 ft mean hgt, ASCE 7-10, CLOSED bldg, not located within 9 00 ft from roof edge, RISK CAT II, EXP B, wind TC DL=3 5 psf, wind BC DL=5 0 psf GCpi(+/-)=0 18

Wind loads and reactions based on MWFRS with additional C&C member design

Bottom chord checked for 10 00 psf non-concurrent live load

Deflection meets L/240 live and L/180 total load Creep increase factor for dead load is 1 50

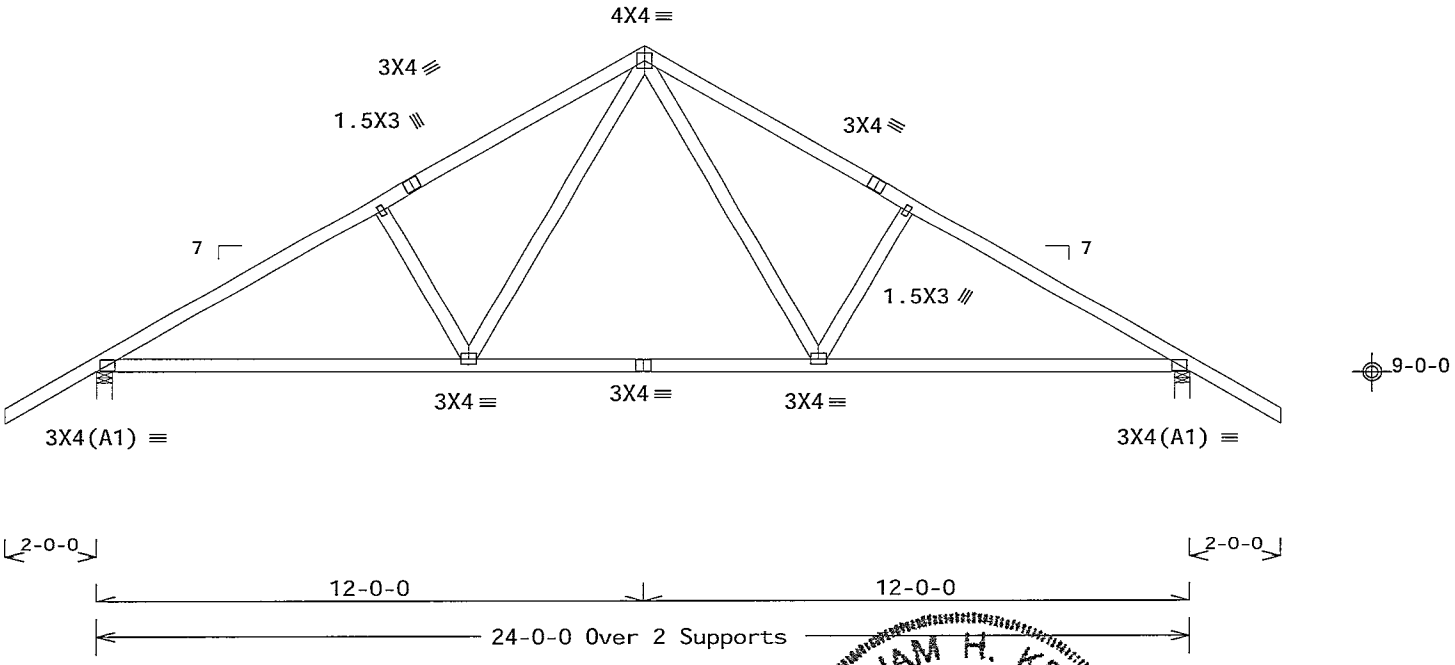

R=1104 U=0 W=4 (4 min)
RL=138/-138

R=1105 U=0 W=4" (4" min)

Design Crit FBC2010Res/TPI-2007(STD)
FT/RT=10%(0%)/0(0)

PLT TYP Wave

12.03 04 0326 14 QTY 2 FL/-/3/-/-/R/- Scale = 25"/Ft.

WILLIAM H. KRICK LICENSE No. 70861 STATE OF FLORIDA PROFESSIONAL ENGINEER

04/19/2013

ALPINE
ITW Building Components Group Inc.
Haines City, FL 33844
FL COA #0 278

WARNING READ AND FOLLOW ALL NOTES ON THIS SHEET!
IMPORTANT FURNISH THIS DESIGN TO ALL CONTRACTORS INCLUDING INSTALLERS

Trusses requ re extreme care n fabricating handling shipping installing and brac ng Refer to and follow the latest ed t on of BCSI (Bu ldng Component Safety Informat on by TPI and WTCA) for safety practices pr or to performing these functions Installers shall prov de temporary brac ng per BCSI Unless noted otherw se top chord shall have properly attached structural sheathing and bottom chord shall have a properly attached r g d ceiling Locations shown for permanent lateral restra nt of webs shall have bracing installed per BCSI sect ons B3 B7 or B10 as applicable

ITW Bu ldng Components Group Inc (ITWBCG) shall not be respons ble for any dev ation from th s design any failure to build the truss in conformance with ANSI/TPI 1 or for handling sh pping installation or bracing of trusses Apply plates to each face of truss and pos t on as shown above and on the Jo nt Data is unless noted otherwise Refer to drawings 160A-Z for standard plate pos t ons A seal on this draw ng or cover page l sting this drawing indicates acceptance of professional eng neering respons b l ty solely for the des gn shown The suitab l ty and use of this design for any structure s the respons b lity of the Build ng Designer per ANSI/TPI 1 Sec 2 For more informat on see Th s job s general notes page ITW-BCG www itwbcg com TPI www tpinst org WTCA www sbc ndustry com ICC www ccsafe org

TC LL	20 0 PSF	REF	R487-- 40048
TC DL	7 0 PSF	DATE	04/19/13
BC DL	10.0 PSF	DRW	HCUSR487 13109001
BC LL	0 0 PSF	HC-ENG	WHK/WHK
TOT LD	37.0 PSF	SEQN-	10757
DUR FAC	1 25		
SPACING	24.0"	JREF-	1UV1487_Z05

Top chord 2x4 SP_#1_12A
Bot chord 2x4 SP_#1_12A
Webs 2x4 SP_#3__12A

Lumber grades designated with 12A use design values approved 1/5/2012 by ALSC

(H1) = (J) Hanger not calculated (2)2x4 SP_#1_12A supporting member

Deflection meets L/240 live and L/180 total load Creep increase factor for dead load is 1 50

120 mph wind, 15 00 ft mean hgt, ASCE 7-10, CLOSED bldg, not located within 9 00 ft from roof edge, RISK CAT II, EXP B wind TC DL=3 5 psf, wind BC DL=5 0 psf GCpi(+/-)=0 18

Wind loads and reactions based on MWFRS with additional C&C member design

Right end vertical not exposed to wind pressure

Bottom chord checked for 10 00 psf non-concurrent live load

MWFRS loads based on trusses located at least 15 00 ft from roof edge

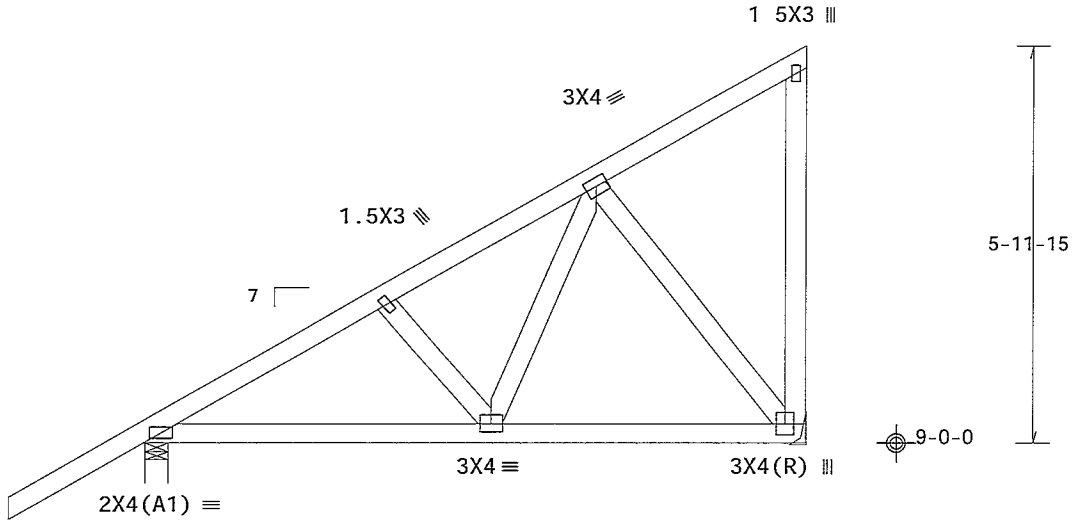

2-0-0

9-8-0 Over 2 Supports

R=510 U=0 W=4' (4' min)
RL=75/-43

Design Crit FBC2010Res/TPI-2007(STD)
FT/RT=10%(0%)/0(0)

PLT TYP Wave

12 03.04 0326 14 QTY 3

FL/-/3/-/-/R/-

Scale =.375"/Ft

WILLIAM H. KRICK LICENSE No. 70861 STATE OF FLORIDA PROFESSIONAL ENGINEER
04/19/2013

ALPINE
ITW Building Components Group Inc.
Haines City, FL 33844
FL COA #0 278

WARNING READ AND FOLLOW ALL NOTES ON THIS SHEET
IMPORTANT FURNISH THIS DESIGN TO ALL CONTRACTORS INCLUDING INSTALLERS

Trusses require extreme care in fabr cat ng handl ng shipp ng nstalling and bracing Refer to and follow the latest edition of BCSI (Bu ld ng Component Safety Information by TPI and WTCA) for safety prac ces pr or to performing these funct ons Installers shall provide temporary bracing per BCSI. Unless noted otherwise top chord shall have properly attached structural sheathing and bottom chord shall have a properly attached rigid ce l ng Locations shown for permanent lateral restraint of webs shall have brac ng nstalled per BCSI sections B3 B7 or B10 as applicable

ITW Building Components Group Inc (ITWBCG) shall not be responsible for any deviat on from th s design, any failure to bu ld the truss n conformance w th ANSI/TPI 1 or for handl ng shipp ng nstallat on and bracing of trusses Apply plates to each face of truss and pos t on as shown above and on the Joint Details unless noted otherw se Refer to draw ngs 160A-Z for standard plate pos tions A seal on this drawing or cover page l st ng th s drawing nd cates acceptance of profess onal engineer ng responsibility solely for the design shown The suitabil ty and use of th s des gn for any structure is the responsibil ty of the Bu ld ng Des gner per ANSI/TPI 1 Sec 2 For more nformation see This job s general notes page ITW-BCG www twbcg com TPI www tp nst org WTCA www sbc ndustry com ICC www icesafe org

TC LL	20 0 PSF	REF	R487-- 40049
TC DL	7.0 PSF	DATE	04/19/13
BC DL	10.0 PSF	DRW	HCUSR487 13109002
BC LL	0 0 PSF	HC-ENG	WHK/WHK
TOT LD	37.0 PSF	SEQN-	10758
DUR.FAC	1 25		
SPACING	24 0"	JREF-	1UV1487_Z05

THIS DWG PREPARED FROM COMPUTER INPUT (LOADS & DIMENSIONS) SUBMITTED BY TRUSS MFR

(13-097--BRYAN ZECHER Mowry Residence -- SW Dusk Glen Rd Lake City, FL 32024 - BM1 9'8' Mono)

Top chord 2x4 SP_#1_12A
Bot chord 2x4 SP_#1_12A
Webs 2x4 SP_#3__12A

Lumber grades designated with "12A" use design values approved 1/5/2012 by ALSC

Bottom chord checked for 10 00 psf non-concurrent live load

Deflection meets L/240 live and L/180 total load Creep increase factor for dead load is 1 50

120 mph wind, 15 00 ft mean hgt, ASCE 7-10, CLOSED bldg, not located within 9 00 ft from roof edge, RISK CAT II, EXP B, wind TC DL=3 5 psf, wind BC DL=5 0 psf GCpi(+/-)=0 18

Wind loads and reactions based on MWFRS with additional C&C member design

Right end vertical not exposed to wind pressure

MWFRS loads based on trusses located at least 30 00 ft from roof edge

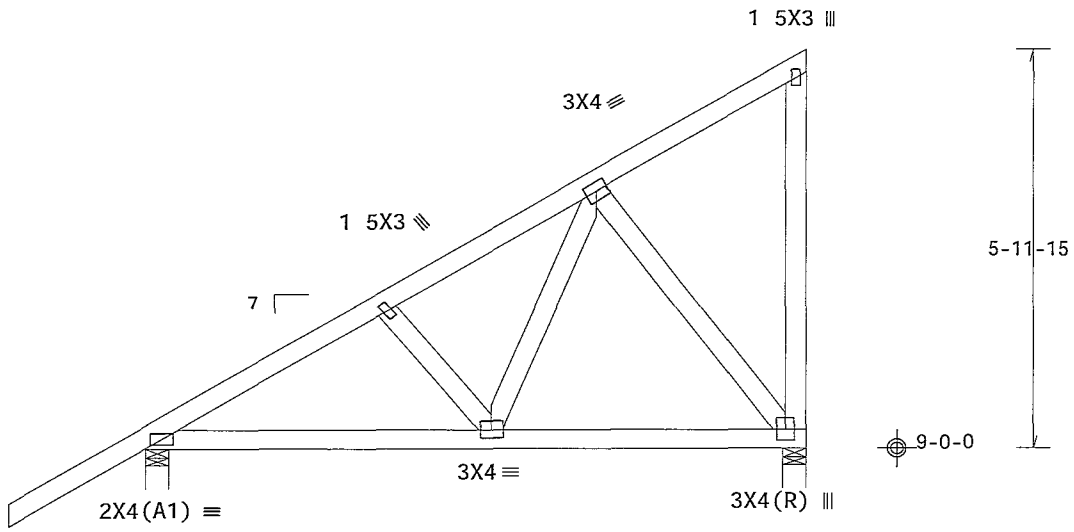

2-0-0

9-8-0 Over 2 Supports

R=510 U=0 W=4" (4" min)
RL=75/-43

Design Crit FBC2010Res/TPI-2007(STD)
FT/RT=10%(0%)/0(0)

PLT TYP. Wave

12 03 04 0326.14 QTY 2

FL/-/3/-/-/R/- Scale =.375"/Ft

TC LL	20 0 PSF	REF	R487-- 40050
TC DL	7 0 PSF	DATE	04/19/13
BC DL	10.0 PSF	DRW	HCUSR487 13109003
BC LL	0 0 PSF	HC-ENG	WHK/WHK
TOT.LD	37 0 PSF	SEQN-	10759
DUR FAC.	1 25		
SPACING	24 0"	JREF-	1UV1487_Z05

WILLIAM H. KRUCK LICENSE No. 70861 STATE OF FLORIDA PROFESSIONAL ENGINEER 04/19/2013

ALPINE
ITW Building Components Group Inc.
Haines City, FL 33844
FL COA #0 278

WARNING READ AND FOLLOW ALL NOTES ON THIS SHEET!
IMPORTANT FURNISH THIS DESIGN TO ALL CONTRACTORS INCLUDING INSTALLERS

Trusses requ re extreme care n fabr cating handling sh pp ng install ng and brac ng Refer to and follow the latest edition of BCSI (Bu ld ng Component Safety Information by TPI and WTCA) for safety pract ces prior to perform ng these funct ons Installers shall provide temporary brac ng per BCSI Unless noted otherwise top chord shall have properly attached structural sheath ng and bottom chord shall have a properly attached rigid ce l ng Locat ons shown for permanent lateral restraint of webs shall have brac ng nstalled per BCSI sections B3 B7 or B10 as appl cable

ITW Building Components Group Inc (ITWBCG) shall not be responsible for any deviat on from this design, any fa lure to build the truss in conformance w th ANSI/TPI 1 or for handl ng sh pping installation or bracing of trusses Apply plates to each face of truss and posit on as shown above and on the Joint Deta ls unless noted otherwise Refer to draw ngs 160A-Z for standard plate pos tions A seal on this draw ng or cover page listing this draw ng indicates acceptance of professional engineering respons bil ty solely for the design shown The suitability and use of this design for any structure s the respons bility of the Build ng Designer per ANSI/TPI 1 Sec 2 For more informat on see Th s job s general notes page ITW BCG www itwbcg com TPI www tpinst org WTCA www sbcindustry com ICC www ccsafe org

(13-097--BRYAN ZECHER Mowry Residence -- SW Dusk Glen Rd Lake City, FL 32024 - C 41'4'8 Special)

THIS DWG PREPARED FROM COMPUTER INPUT (LOADS & DIMENSIONS) SUBMITTED BY TRUSS MFR

Top chord 2x4 SP_#1_12A
Bot chord 2x4 SP_#1_12A
Webs 2x4 SP_#3__12A

Lumber grades designated with "12A' use design values approved 1/5/2012 by ALSC

Left end vertical not exposed to wind pressure

(a) Continuous lateral bracing equally spaced on member

Bottom chord checked for 10 00 psf non-concurrent live load

MWFRS loads based on trusses located at least 15 00 ft from roof edge

120 mph wind, 15 00 ft mean hgt, ASCE 7-10, CLOSED bldg, not located within 13 00 ft from roof edge, RISK CAT II, EXP B, wind TC DL=3 5 psf, wind BC DL=5 0 psf GCpi(+/-)=0 18

Wind loads and reactions based on MWFRS with additional C&C member design

Left cantilever is exposed to wind

In lieu of structural panels use purlins to brace all flat TC @ 24" OC

Deflection meets L/240 live and L/180 total load Creep increase factor for dead load is 1 50

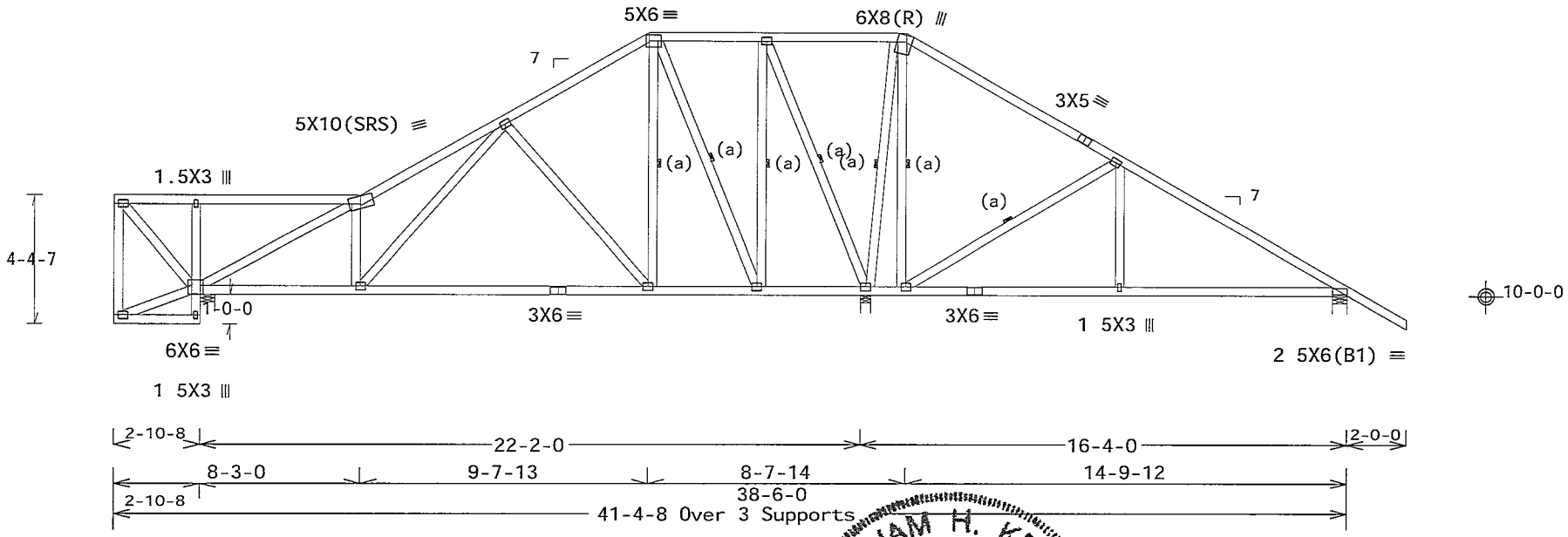

R=947 U=23 W=6" (6' min)
RL=126/-135

R=612 U=13 W=6" (6" min)

Note: All Plates Are 3X4 Except As Shown.

Design Crit: FBC2010Res/TPI-2007(STD)

PLT TYP. Wave FT/RT=10%(0%)/0(0) 12.03.04.0326.14 QTY 1 FL/-/3/-/-/R/- Scale =.1875"/Ft

WILLIAM H. KRICK LICENSE No. 70861 STATE OF FLORIDA PROFESSIONAL ENGINEER

04/19/2013

ALPINE
ITW Building Components Group Inc.
Haines City, FL 33844
FL COA #0 278

WARNING READ AND FOLLOW ALL NOTES ON THIS SHEET!
IMPORTANT FURNISH THIS DESIGN TO ALL CONTRACTORS INCLUDING INSTALLERS

Trusses require extreme care n fabricating handling sh pping install ng and brac ng Refer to and follow the latest edit on of BCSI (Bu ld ng Component Safety Information by TPI and WTCA) for safety pract ces prior to perform ng these functions Installers shall prov de temporary brac ng per BCSI Unless noted otherwise top chord shall have properly attached structural sheath ng and bottom chord shall have a properly attached rig d ce l ng Locations shown for permanent lateral restraint of webs shall have bracing nstalled per BCSI sections B3 B7 or B10 as applicable

ITW Build ng Components Group Inc (ITWBCG) shall not be responsible for any deviat on from th s design any failure to build the truss in conformance with ANSI/TPI 1 or for handling shipp ng nstallat on bracing of trusses Apply plates to each face of truss and position as shown above and on the Joint Details unless noted otherwise Refer to draw ngs 160A-Z for standard plate pos tions A seal on th s drawing or cover page list ng this drawing indicates acceptance of profess onal engineering respons bility solely for the des gn shown The su tability and use of this design for any structure is the responsibility of the Bu ld ng Des gner per ANSI/TPI 1 Sec 2 For more information see This job s general notes page ITW BCG www twbcg com TPI www tpinst org WTCA www sbc ndustry com ICC www iccsafe org

TC LL	20.0 PSF	REF	R487-- 40051
TC DL	7 0 PSF	DATE	04/19/13
BC DL	10.0 PSF	DRW	HCUSR487 13109004
BC LL	0.0 PSF	HC-ENG	WHK/WHK
TOT LD.	37.0 PSF	SEQN-	10760
DUR.FAC.	1.25		
SPACING	24.0"	JREF-	1UVI487_Z05

(13-097--BRYAN ZECHER Mowry Residence -- SW Dusk Glen Rd Lake City, FL 32024 - C1 41'4'8 Special)

Top chord 2x4 SP_#1_12A
Bot chord 2x4 SP_#1_12A
Webs 2x4 SP_#3__12A

Lumber grades designated with "12A" use design values approved 1/5/2012 by ALSC

Left end vertical not exposed to wind pressure

(a) Continuous lateral bracing equally spaced on member

Bottom chord checked for 10 00 psf non-concurrent live load

MWFRS loads based on trusses located at least 15 00 ft from roof edge

120 mph wind, 15 00 ft mean hgt, ASCE 7-10, CLOSED bldg, not located within 13 00 ft from roof edge, RISK CAT II, EXP B, wind TC DL=3 5 psf, wind BC DL=5 0 psf GCpi(+/-)=0 18

Wind loads and reactions based on MWFRS with additional C&C member design

Left cantilever is exposed to wind

In lieu of structural panels use purlins to brace all flat TC @ 24" OC

Deflection meets L/240 live and L/180 total load Creep increase factor for dead load is 1 50

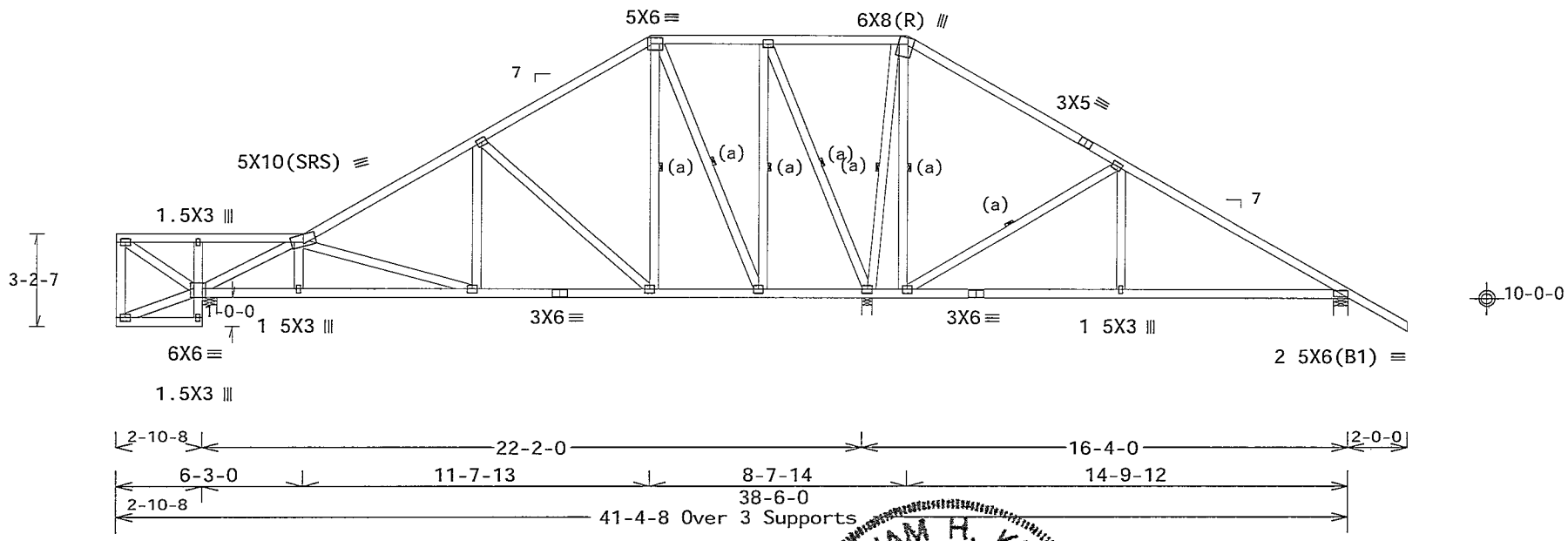

Note. All Plates Are 3X4 Except As Shown.

Design Crit: FBC2010Res/TPI-2007(STD)

PLT TYP. Wave FT/RT=10%(0%)/0(0) 12.03.04.0326.14 QTY 1 FL/-/3/-/-/R/- Scale =.1875"/Ft

WILLIAM H. KRICK LICENSE No. 70861 STATE OF FLORIDA PROFESSIONAL ENGINEER

04/19/2013

ALPINE
ITW Building Components Group Inc.
Haines City, FL 33844
FL COA #0 278

WARNING READ AND FOLLOW ALL NOTES ON THIS SHEET!
IMPORTANT FURNISH THIS DESIGN TO ALL CONTRACTORS INCLUDING INSTALLERS

Trusses require extreme care n fabricating handling sh pp ng installing and brac ng Refer to and follow the latest edition of BCSI (Bu lding Component Safety Information by TPI and WTCA) for safety practices prior to perform ng these functions Installers shall prov de temporary brac ng per BCSI Unless noted otherwise top chord shall have properly attached structural sheathing and bottom chord shall have a properly attached rigid ce l ng Locat ons shown for permanent lateral restra nt shall have bracing nstalled per BCSI sections B3 B7 or B10 as applicable

ITW Building Components Group Inc (ITWBCG) shall not be responsible for any deviat on from this design any failure to bu ld the truss n conformance with ANSI/TPI 1 or for handling shipp ng nstallat bracing of trusses Apply plates to each face of truss and position as shown above and on the Jo nt Details unless noted otherw se Refer to draw ngs 160A-Z for standard plate positions A seal on th s drawing or cover page list ng this drawing ind cates acceptance of profess onal engineer ng responsibility solely for the design shown The su tability and use of this des gn for any structure is the responsibility of the Bu lding Designer per ANSI/TPI 1 Sec 2 For more nformation see This job s general notes page ITW BCG www itwbcg com TPI www tpinst org WTCA www sbcindustry com ICC www iccsafe org

TC LL	20.0 PSF	REF	R487-- 40052
TC DL	7.0 PSF	DATE	04/19/13
BC DL	10.0 PSF	DRW	HCUSR487 13109005
BC LL	0 0 PSF	HC-ENG	WHK/WHK
TOT.LD.	37.0 PSF	SEQN-	10761
DUR FAC.	1.25		
SPACING	24.0"	JREF-	1UV1487_Z05

(13-097--BRYAN ZECHER Mowry Residence -- SW Dusk Glen Rd Lake City, FL 32024 - C2 41'4"8 Special)

THIS DWG PREPARED FROM COMPUTER INPUT (LOADS & DIMENSIONS) SUBMITTED BY TRUSS MFR

Top chord 2x4 SP_#1_12A
Bot chord 2x4 SP_#1_12A
Webs 2x4 SP_#3__12A

Lumber grades designated with '12A" use design values approved 1/5/2012 by ALSC

Left end vertical not exposed to wind pressure

Max JT VERT DEFL LL 0 04' DL 0 16" recommended camber 1/4

In lieu of structural panels use purlins to brace all flat TC @ 24' OC

MWFRS loads based on trusses located at least 15 00 ft from roof edge

120 mph wind, 15 00 ft mean hgt, ASCE 7-10, CLOSED bldg, not located within 13 00 ft from roof edge, RISK CAT II, EXP B, wind TC DL=3 5 psf, wind BC DL=5 0 psf GCpi(+/-)=0 18

Wind loads and reactions based on MWFRS with additional C&C member design

Left cantilever is exposed to wind

(a) Continuous lateral bracing equally spaced on member

Bottom chord checked for 10 00 psf non-concurrent live load

Deflection meets L/240 live and L/180 total load Creep increase factor for dead load is 1 50

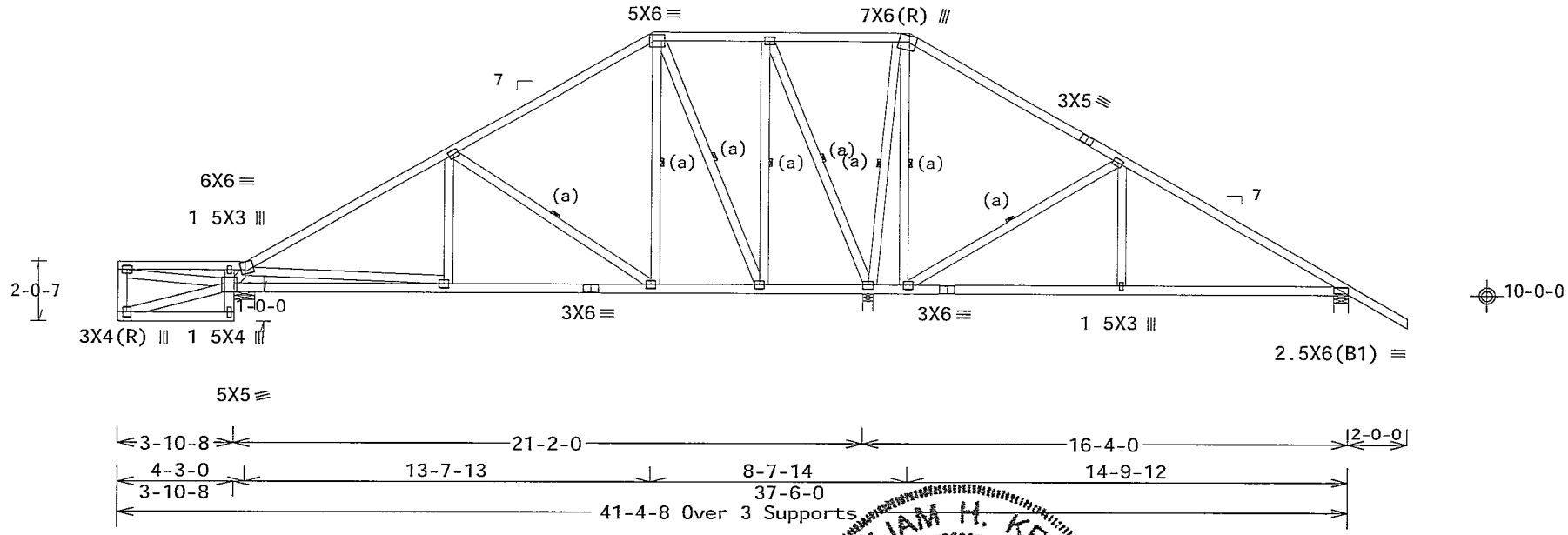

Note. All Plates Are 3X4 Except As Shown.

Design Crit: FBC2010Res/TPI-2007(STD)

PLT TYP. Wave FT/RT=10%(0%)/0(0) 12.03 04 0386.14 QTY 1 FL/-/3/-/-/R/- Scale =.1875"/Ft.

WILLIAM H. KRUCK LICENSE No. 70861 STATE OF FLORIDA PROFESSIONAL ENGINEER 04/19/2013

ALPINE
ITW Building Components Group Inc.
Haines City, FL 33844
FL COA #0 278

WARNING READ AND FOLLOW ALL NOTES ON THIS SHEET!
IMPORTANT FURNISH THIS DESIGN TO ALL CONTRACTORS INCLUDING INSTALLERS

Trusses require extreme care n fabricating handling shipping installing and brac ng Refer to and follow the latest edition of BCSI (Bu lding Component Safety Information on by TPI and WTCA) for recommended practices prior to perform ng these funct ons Installers shall prov de temporary bracing per BCSI Unless noted otherwise top chord shall have properly attached structural sheath ng and bottom chord shall have a properly attached rigid ce l ng Locat ons shown for permanent lateral restraint of webs shall have brac ng installed per BCSI sections B3 B7 or B10 as applicable

ITW Bu ld ng Components Group Inc (ITWBCG) shall not be respons ble for any dev ation from this design any failure to build the truss in conformance with ANSI/TPI 1 or for handling sh pping installation & brac ng of trusses Apply plates to each face of truss and posit on as shown above and on the Joint Deta ls unless noted otherwise Refer to drawings 160A-Z for standard plate posit ons A seal on this draw ng or cover page listing this drawing indicates acceptance of professional eng neering responsibil ty solely for the design shown The suitability and use of th s design for any structure s the responsib l ty of the Build ng Designer per ANSI/TPI 1 Sec 2 For more nformat on see Th s job s general notes page ITW-BCG www twbcg com TPI www tp nst org WTCA www sbc ndustry com ICC www iccsafe org

TC LL	20.0 PSF	REF	R487-- 40053
TC DL	7.0 PSF	DATE	04/19/13
BC DL	10.0 PSF	DRW	HCUSR487 13109006
BC LL	0 0 PSF	HC-ENG	WHK/WHK
TOT.LD.	37.0 PSF	SEQN-	10762
DUR FAC	1 25		
SPACING	24 0"	JREF-	1UVI487_Z05

(13-097--BRYAN ZECHER Mowry Residence -- SW Dusk Glen Rd Lake City, FL 32024 - C3 41'4"8 Special)

Top chord 2x4 SP_#1_12A
Bot chord 2x4 SP_#1_12A
Webs 2x4 SP_#3__12A W5 2x4 SP_#1_12A

Lumber grades designated with 12A" use design values approved 1/5/2012 by ALSC

Left cantilever is exposed to wind

(a) Continuous lateral bracing equally spaced on member

Bottom chord checked for 10 00 psf non-concurrent live load

MWFRS loads based on trusses located at least 15 00 ft from roof edge

120 mph wind, 15 00 ft mean hgt, ASCE 7-10, CLOSED bldg, not located within 13 00 ft from roof edge, RISK CAT II, EXP B, wind TC DL=3 5 psf, wind BC DL=5 0 psf GCpi(+/-)=0 18

Wind loads and reactions based on MWFRS with additional C&C member design

Max JT VERT DEFL LL 0 29' DL 0 72' recommended camber 1 1/8"

In lieu of structural panels use purlins to brace all flat TC @ 24" OC

Deflection meets L/240 live and L/180 total load Creep increase factor for dead load is 1 50

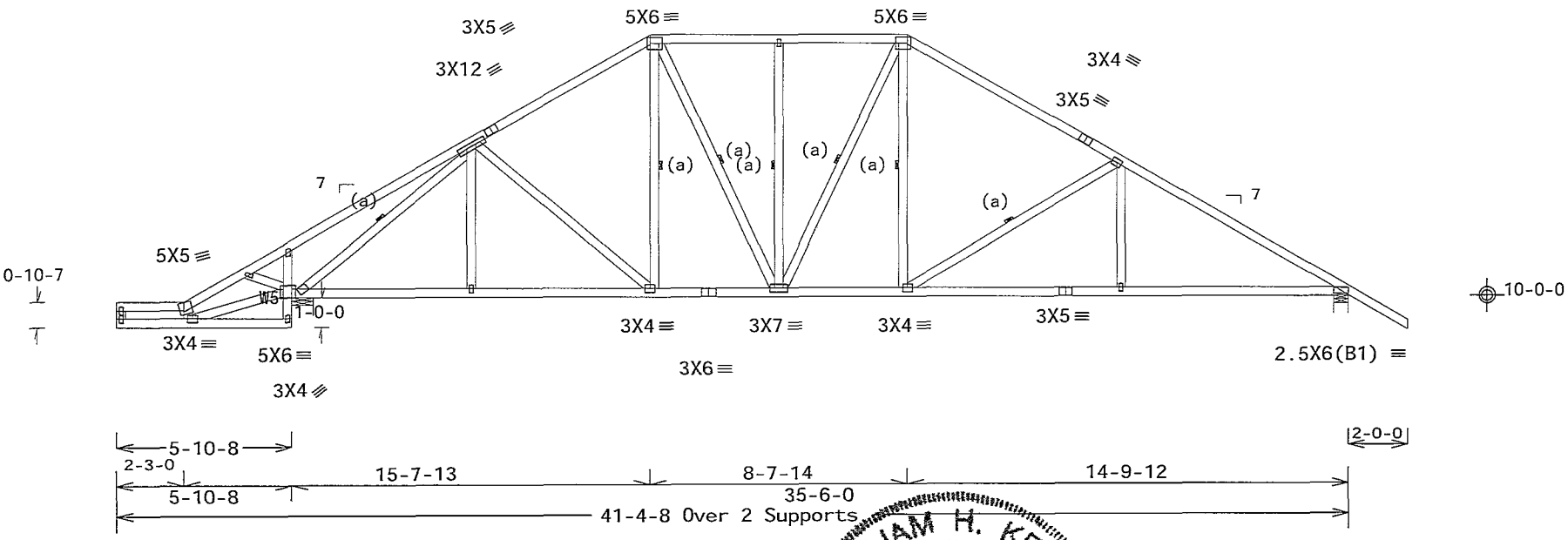

R=1847 U=0 W=8 485" (8 485" min)
RL=164/-151

R=1450 U=0 W=6" (6" min)

Note. All Plates Are 1 5X3 Except As Shown

Design Crit FBC2010Res/TPI-2007(STD)
FT/RT=10%(0%)/0(0)

PLT TYP. Wave

12.03.04 0326.14 QTY 1

FL/-/3/-/-/R/-

Scale =.1875"/Ft.

WILLIAM H. KRICK LICENSE No. 70861 STATE OF FLORIDA PROFESSIONAL ENGINEER

04/19/2013

ALPINE
ITW Building Components Group Inc.
Haines City, FL 33844
FL COA #0 278

WARNING READ AND FOLLOW ALL NOTES ON THIS SHEET!
IMPORTANT FURNISH THIS DESIGN TO ALL CONTRACTORS INCLUDING INSTALLERS

Trusses require extreme care in fabr cat ng hand l ng sh pp ng nstalling and bracing Refer to and follow the latest edition of BCSI (Bu ld ng Component Safety Information by TPI and WTCA) for safety pract ces prior to performing these funct ons Installers shall provide temporary bracing per BCSI Unless noted otherwise top chord shall have properly attached structural sheath ng and bottom chord shall have a properly attached rigid ce l ng Locations shown for permanent lateral restraint of webs shall have brac ng installed per BCSI sections B3 B7 or B10 as applicable

ITW Building Components Group Inc (ITWBCG) shall not be respons ble for any dev ation from this design any fa lure to bu ld the truss in conformance w th ANSI/TPI 1 or for hand l ng sh pping nstallation bracing of trusses Apply plates to each face of truss and pos t on as shown above and on the Joint Details unless noted otherwise Refer to drawings 160A-Z for standard plate positions A seal on this draw ng or cover page listing this drawing indicates acceptance of professional engineering responsibil ty solely for the design shown The suitability and use of this design for any structure s the respons bil ty of the Build ng Designer per ANSI/TPI 1 Sec 2 For more nformat on see Th s job s general notes page ITW-BCG www twbcg com TPI www tp nst org WTCA www sbc ndustry com ICC www ccsafe org

TC LL	20.0 PSF	REF	R487-- 40054
TC DL	7.0 PSF	DATE	04/19/13
BC DL	10.0 PSF	DRW	HCUSR487 13109007
BC LL	0.0 PSF	HC-ENG	WHK/WHK
TOT LD	37 0 PSF	SEQN-	10763
DUR FAC	1 25		
SPACING	24 0"	JREF-	1UVI487_Z05

(13-097--BRYAN ZECHER Mowry Residence -- SW Dusk Glen Rd Lake City, FL 32024 - C4 40' Stepdown Hip)

Top chord 2x4 SP_#1_12A
Bot chord 2x4 SP_#1_12A
Webs 2x4 SP_#3__12A W1, W5 2x4 SP_#1_12A
W9 2x12 SP_#2_12A

Lumber grades designated with "12A" use design values approved 1/5/2012 by ALSC

Calculated horizontal deflection is 0 14' due to live load and 0 23' due to dead load

(a) #3 or better scab brace Same size & 80% length of web member Attach with 10d Box or Gun (0 128 x3',min)nails @ 6" OC

Bottom chord checked for 10 00 psf non-concurrent live load

MWFRS loads based on trusses located at least 30 00 ft from roof edge

120 mph wind, 15 00 ft mean hgt, ASCE 7-10, CLOSED bldg, not located within 13 00 ft from roof edge, RISK CAT II, EXP B, wind TC DL=3 5 psf, wind BC DL=5 0 psf GCpi(+/-)=0 18

Wind loads and reactions based on MWFRS with additional C&C member design

Left cantilever is exposed to wind

(b) 1x4 #3SRB SPF-S or better "T" brace 80% length of web member Attach with 8d Box or Gun (0 113"x2 5",min)nails @ 6" OC

In lieu of structural panels use purlins to brace all flat TC @ 24" OC

Deflection meets L/240 live and L/180 total load Creep increase factor for dead load is 1 50

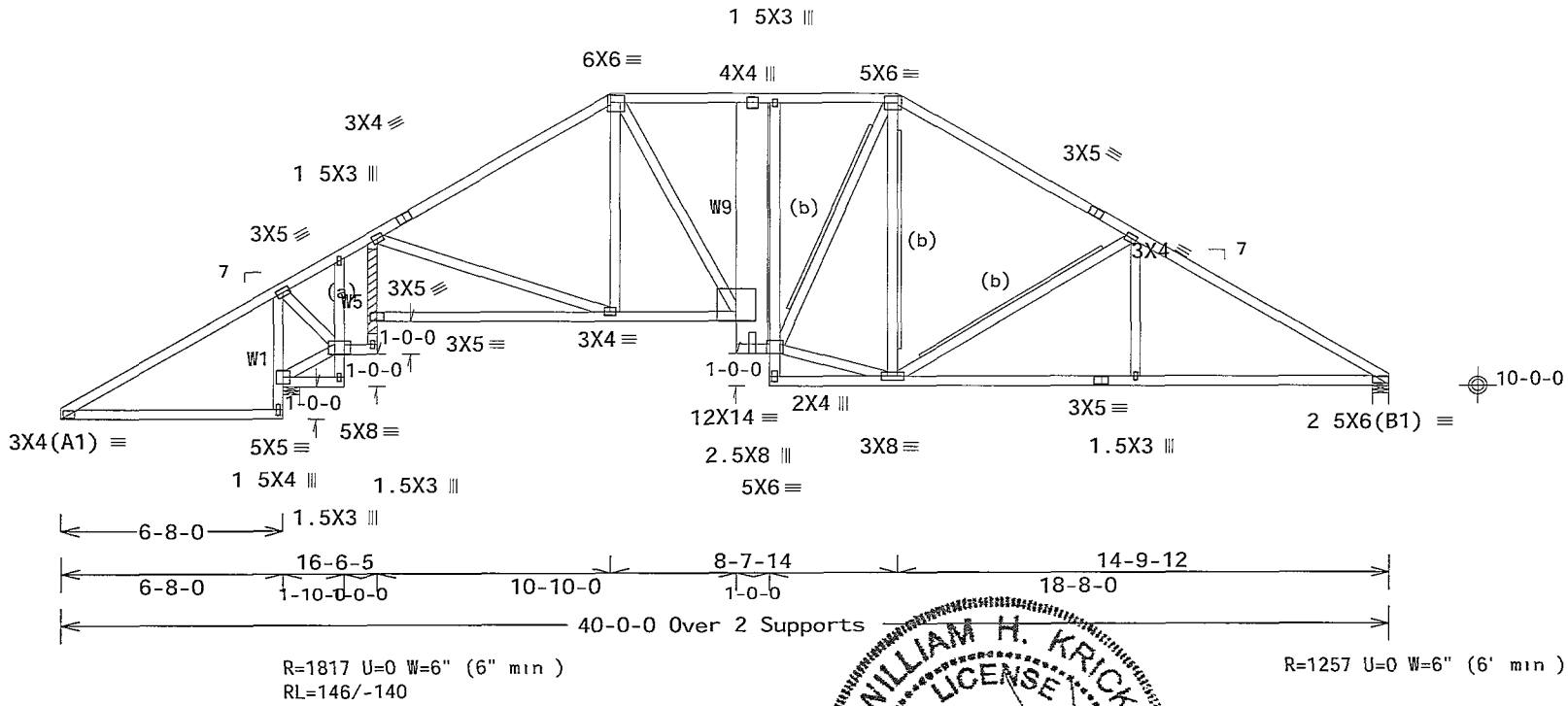

Design Crit: FBC2010Res/TPI-2007(STD)
FT/RT=10%(0%)/0(0)

PLT TYP Wave

12 03 04 0326 14 QTY 1

FL/-/3/-/-/R/- Scale =.1875"/Ft.

WILLIAM H. KRICK LICENSE No. 70861 STATE OF FLORIDA PROFESSIONAL ENGINEER

04/19/2013

ALPINE
ITW Building Components Group Inc.
Haines City, FL 33844
FL COA #0 278

WARNING READ AND FOLLOW ALL NOTES ON THIS SHEET
IMPORTANT FURNISH THIS DESIGN TO ALL CONTRACTORS INCLUDING INSTALLERS

Trusses requ re extreme care in fabricat ng handling shipping installing and brac ng Refer to and follow the latest ed t on of BCSI (Build ng Component Safety Information by TPI and WTCA) for safety practices pr or to performing these functions Installers shall prov de temporary brac ng per BCSI. Unless noted otherwise top chord shall have properly attached structural sheathing and bottom chord shall have a properly attached r g d ce ling Locat ons shown for permanent lateral restra nt of webs shall have bracing installed per BCSI sect ons B3 B7 or B10 as appl cable

ITW Bu ld ng Components Group Inc (ITWBCG) shall not be responsible for any dev at on from th s design any failure to bu ld the truss n conformance w th ANSI/TPI 1 or for handling shipp ng nstallat on and bracing of trusses Apply plates to each face of truss and pos t on as shown above and on the Jo nt Details unless noted otherw se Refer to draw ngs 160A-Z for standard plate pos t ons A seal on th s draw ng or cover page l st ng th s draw ng nd cates acceptance of profess onal engineer ng responsibility solely for the des gn shown The su tab l ty and use of th s des gn for any structure is the respons bility of the Bu ld ng Des gner per ANSI/TPI 1 Sec 2 For more informat on see Th s job s general notes page ITW BCG www itwbcg com TPI www tpinst org WTCA www sbcindustry com ICC www ccsafe org

TC LL	20 0 PSF	REF	R487-- 40055
TC DL	7 0 PSF	DATE	04/19/13
BC DL	10 0 PSF	DRW	HCUSR487 13109008
BC LL	0 0 PSF	HC-ENG	WHK/WHK
TOT.LD	37 0 PSF	SEQN-	10764
DUR FAC	1 25		
SPACING	24 0"	JREF-	1UV1487_Z05

(13-097--BRYAN ZECHER Mowry Residence -- SW Dusk Glen Rd Lake City, FL 32024 - C5 40' Stepdown Hip)

Top chord 2x4 SP_#1_12A
Bot chord 2x4 SP_#1_12A
Webs 2x4 SP_#3__12A W1 2x4 SP_#1_12A
W9 2x12 SP_#2_12A

Lumber grades designated with 12A use design values approved 1/5/2012 by ALSC

(b) 1x4 #3SRB SPF-S or better 'T brace 80% length of web member Attach with 8d Box or Gun (0 113 x2 5 ,min)nails @ 6 OC

In lieu of structural panels use purlins to brace all flat TC @ 24 OC

Bottom chord checked for 10 00 psf non-concurrent live load

MWFRS loads based on trusses located at least 15 00 ft from roof edge

120 mph wind, 15 00 ft mean hgt, ASCE 7-10, CLOSED bldg, not located within 13 00 ft from roof edge, RISK CAT II, EXP B, wind TC DL=3 5 psf, wind BC DL=5 0 psf GCpi(+/-)=0 18

Wind loads and reactions based on MWFRS with additional C&C member design

Calculated horizontal deflection is 0 12" due to live load and 0 20" due to dead load

(a) (2) #3 or better scab braces Same size & 80% length of web member Attach one to each face w/10d Box or Gun (0 128'x3",min)nails @ 6 OC

Deflection meets L/240 live and L/180 total load Creep increase factor for dead load is 1 50

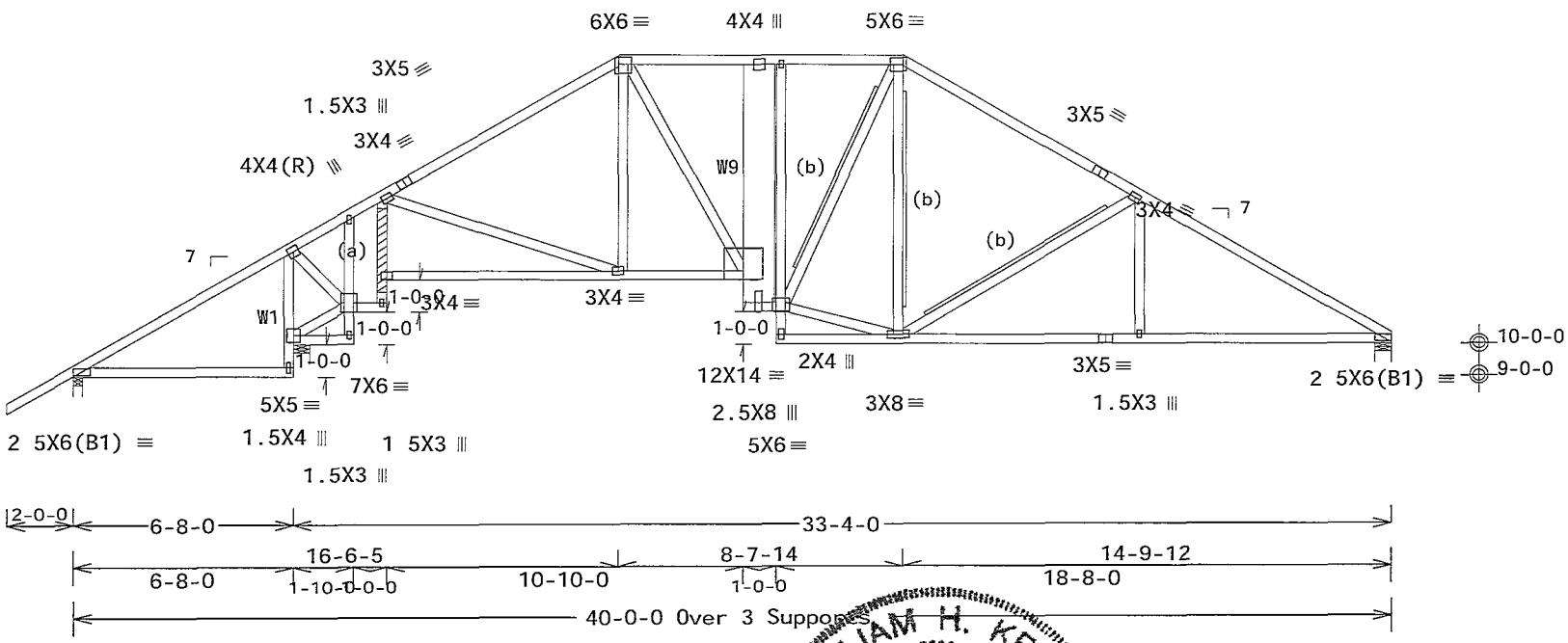

Design Crit FBC2010Res/TPI-2007(STD)
FT/RT=10%(0%)/0(0)

PLT TYP Wave

12 03 04 0326 14 QTY 1

FL/-/3/-/-/R/- Scale = 1875"/Ft

WILLIAM H. KRICK LICENSE No. 70861 STATE OF FLORIDA PROFESSIONAL ENGINEER
04/19/2013

ALPINE
ITW Building Components Group Inc.
Haines City, FL 33844
FL COA #0 278

WARNING READ AND FOLLOW ALL NOTES ON THIS SHEET!
IMPORTANT FURNISH THIS DESIGN TO ALL CONTRACTORS INCLUDING INSTALLERS

Trussos require extreme care n fabr cating handl ng sh pp ng install ng and brac ng Refer to and follow the latest edition of BCSI (Bu ld ng Component Safety Informat on by TPI and WTCA) for safety pract ces prior to perform ng these funct ons Installers shall prov de temporary brac ng per BCSI Unless noted otherwise top chord shall have properly attached structural sheath ng and bottom chord shall have a properly attached rig d ce l ng Locat ons shown for permanent lateral restra nt of webs shall have brac ng nstalled per BCSI sect ons B3 B7 or B10 as applicable

ITW Building Components Group Inc (ITWBCG) shall not be respons ble for any dev at on from this design, any fa lure to build the truss n conformance w th ANSI/TPI 1 or for handl ng sh pping nstallation & bracing of trusses Apply plates to each face of truss and pos t on as shown above and on the Joint Deta ls unless noted otherwise Refer to draw ngs 160A-Z for standard plate pos t ons A seal on this draw ng or cover page listing this draw ng ind cates acceptance of professional engineering respons b l ty solely for the design shown The su tab lity and use of this des gn for any structure s the respons b l ity of the Building Designer per ANSI/TPI 1 Sec 2 For more informat on see Th s job s general notes page ITW-BCG www itwbcg com TPI www tp nst org WTCA www sbcindustry com ICC www ccsafe org

TC LL	20 0 PSF	REF	R487-- 40056
TC DL	7 0 PSF	DATE	04/19/13
BC DL	10.0 PSF	DRW	HCUSR487 13109009
BC LL	0 0 PSF	HC-ENG	WHK/WHK
TOT LD	37 0 PSF	SEQN-	10765
DUR FAC	1 25		
SPACING	24 0"	JREF-	1UV1487_Z05

(13-097--BRYAN ZECHER Mowry Residence -- SW Dusk Glen Rd Lake City, FL 32024 - C6 36' Stepdown Hip)

Top chord 2x4 SP_#1_12A
Bot chord 2x4 SP_#1_12A
Webs 2x4 SP_#3__12A W1 2x4 SP_#1_12A
Rt Stub Wedge 2x4 SP_#3__12A

Lumber grades designated with '12A" use design values approved 1/5/2012 by ALSC

In lieu of structural panels use purlins to brace all flat TC @ 24' OC

Bottom chord checked for 10 00 psf non-concurrent live load

MWFRS loads based on trusses located at least 15 00 ft from roof edge

120 mph wind, 15 00 ft mean hgt, ASCE 7-10, CLOSED bldg, not located within 9 00 ft from roof edge, RISK CAT II, EXP B, wind TC DL=3 5 psf, wind BC DL=5 0 psf GCpi(+/-)=0 18

Wind loads and reactions based on MWFRS with additional C&C member design

(a) (2) #3 or better scab braces Same size & 80% length of web member Attach one to each face w/10d Box or Gun (0 128"x3",min)nails @ 6' OC

Deflection meets L/240 live and L/180 total load Creep increase factor for dead load is 1 50

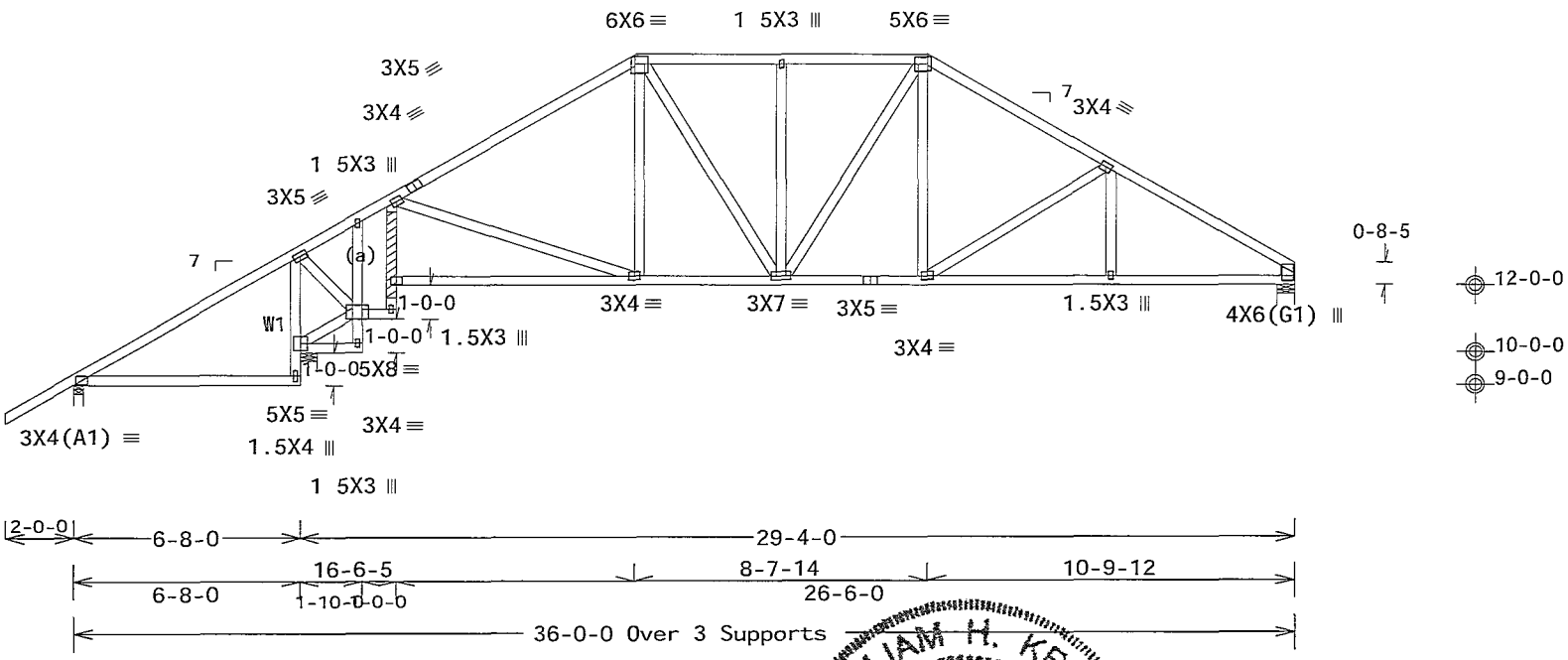

R=320 U=31 W=3 5 (3 5' min)
RL=146/-134

R=1536 U=0 W=6 (6' min)

R=1089 U=0 W=6 (6' min)

Design Crit FBC2010Res/TPI-2007(STD)
FT/RT=10%(0%)/0(0)

PLT TYP Wave

12 03 04 03 26.14 QTY 3

FL/-/3/-/-/R/-

Scale =.1875"/Ft

WILLIAM H. KRICK LICENSE No. 70861 STATE OF FLORIDA PROFESSIONAL ENGINEER

04/19/2013

ALPINE
ITW Building Components Group Inc.
Haines City, FL 33844
FL COA #0 278

WARNING READ AND FOLLOW ALL NOTES ON THIS SHEET!
IMPORTANT FURNISH THIS DESIGN TO ALL CONTRACTORS INCLUDING INSTALLERS

Trusses requ re extreme care n fabricat ng hand ng shipping installing and brac ng Refer to and follow the latest ed t on of BCSI (Building Component Safety Informat on by TPI and WTCA) for recommended practices pr or to performing these functions Installers shall prov de temporary bracing per BCSI. Unless noted otherw se top chord shall have properly attached structural sheathing and bottom chord shall have a properly attached r g d ceiling Locations shown for permanent lateral restra nt of webs shall have bracing nstalled per BCSI sect ons B3 B7 or B10 as appl cable

ITW Build ng Components Group Inc (ITWBCG) shall not be responsible for any dev at on from th s design, any failure to build the truss n conformance with ANSI/TPI 1 or for handling shipp ng installat on & brac ng of trusses Apply plates to each face of truss and position as shown above and on the Jo nt Details unless noted otherwise Refer to drawings 160A-Z for standard plate posit ons A seal on th s drawing or cover page i st ng th s drawing nd cates acceptance of profess onal eng neer ng responsibility solely for the des gn shown The suitabil ty and use of th s des gn for any structure s the responsibil ty of the Bu ld ng Des gner per ANSI/TPI 1 Sec 2 For more nformation see This job s general notes page ITW BCG www twbcg com TPI www tp nst org WTCA www sbc ndustry com ICC www iccsafe org

TC LL	20 0 PSF	REF	R487-- 40057
TC DL	7 0 PSF	DATE	04/19/13
BC DL	10.0 PSF	DRW	HCUSR487 13109010
BC LL	0.0 PSF	HC-ENG	WHK/WHK
TOT LD.	37.0 PSF	SEQN-	10766
DUR.FAC	1.25		
SPACING	24 0"	JREF-	1UVI487_Z05

(13-097--BRYAN ZECHER Mowry Residence -- SW Dusk Glen Rd Lake City, FL 32024 - C7 40' Stepdown Hip)

Top chord 2x4 SP_#1_12A
Bot chord 2x4 SP_#1_12A
Webs 2x4 SP_#3__12A W9 2x4 SP_#1_12A

Lumber grades designated with 12A use design values approved 1/5/2012 by ALSC

Calculated horizontal deflection is 0 11" due to live load and 0 19' due to dead load

(b) 1x4 #3SRB SPF-S or better "T brace 80% length of web member Attach with 8d Box or Gun (0 113"x2 5",min)nails @ 6" OC

In lieu of structural panels use purlins to brace all flat TC @ 24" OC

MWFRS loads based on trusses located at least 15 00 ft from roof edge

Negative reaction(s) of -324# MAX (See below) from a non-wind load case requires uplift connection

120 mph wind, 15 00 ft mean hgt, ASCE 7-10, CLOSED bldg, not located within 13 00 ft from roof edge, RISK CAT II, EXP B, wind TC DL=3 5 psf, wind BC DL=5 0 psf GCpi(+/-)=0 18

Wind loads and reactions based on MWFRS with additional C&C member design

(a) #3 or better scab brace Same size & 80% length of web member Attach with 10d Box or Gun (0 128"x3',min)nails @ 6" OC

Bottom chord checked for 10 00 psf non-concurrent live load

Deflection meets L/240 live and L/180 total load Creep increase factor for dead load is 1 50

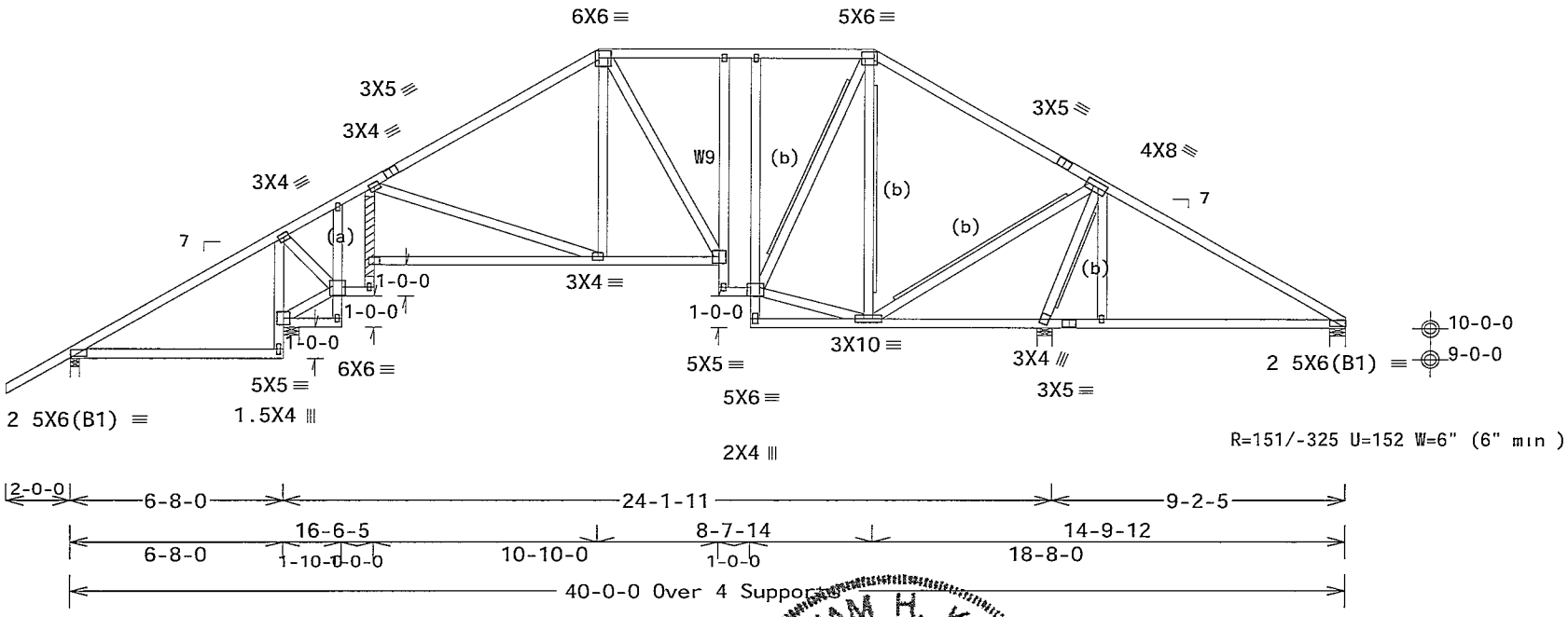

Note All Plates Are 1 5X3 Except As Shown.

Design Crit: FBC2010Res/TPI-2007(STD)

PLT TYP. Wave FT/RT=10%(0%)/0(0) 12 03 04 0326 14 QTY 1 FL/-/3/-/-/R/- Scale = 1875"/Ft

WILLIAM H. KRICK LICENSE No 70861 STATE OF FLORIDA PROFESSIONAL ENGINEER

04/19/2013

ALPINE
ITW Building Components Group Inc.
Haines City, FL 33844
FL COA #0 278

WARNING READ AND FOLLOW ALL NOTES ON THIS SHEET!
IMPORTANT FURNISH THIS DESIGN TO ALL CONTRACTORS INCLUDING INSTALLERS

Trusses requ re extreme care n fabricating handling sh pping install ng and brac ng Refer to and follow the latest edition of BCSI (Bu lding Component Safety Informat on by TPI and WTCA) for safety pract ces prior to perform ng these functions Installers shall prov de temporary brac ng per BCSI. Unless noted otherwise top chord shall have properly attached structural sheathing and bottom chord shall have a properly attached rigid ce l ng Locat ons shown for permanent lateral restra nt of webs shall have bracing nstalled per BCSI sect ons B3 B7 or B10 as appl cable

ITW Building Components Group Inc (ITWBCG) shall not be responsible for any deviat on from this design, any fa lure to bu ld the truss in conformance w th ANSI/TPI 1 or for hand l ng shipping nstallation or bracing of trusses Apply plates to each face of truss and pos t on as shown above and on the Joint Details unless noted otherwise Refer to drawings 160A-Z for standard plate pos tions A seal on this drawing or cover page listing this drawing nd cates acceptance of profess onal engineer ng respons b lity solely for the design shown The suitability and use of this des gn for any structure is the responsibility of the Building Des gner per ANSI/TPI 1 Sec 2 For more information see This job s general notes page ITW BCG www itwbcg com TPI www tpinst org WTCA www sbcindustry com ICC www iccsafe org

TC LL	20 0 PSF	REF	R487-- 40058
TC DL	7 0 PSF	DATE	04/19/13
BC DL	10.0 PSF	DRW	HCUSR487 13109011
BC LL	0.0 PSF	HC-ENG	WHK/WHK
TOT.LD.	37.0 PSF	SEQN-	10767
DUR.FAC	1.25		
SPACING	24.0"	JREF-	1UV1487_Z05

(13-097--BRYAN ZECHER Mowry Residence -- SW Dusk Glen Rd Lake City, FL 32024 - CJ1 1 Jack)

THIS DWG PREPARED FROM COMPUTER INPUT (LOADS & DIMENSIONS) SUBMITTED BY TRUSS MFR

Top chord 2x4 SP_#1_12A
Bot chord 2x4 SP_#1_12A

Lumber grades designated with 12A use design values approved 1/5/2012 by ALSC

Bottom chord checked for 10 00 psf non-concurrent live load

Provide (2) 16d common nails(0 162 x3 5"), toe nailed at Top chord
Provide (2) 16d common nails(0 162"x3 5"), toe nailed at Bot chord

120 mph wind, 15 00 ft mean hgt, ASCE 7-10, CLOSED bldg, Located anywhere in roof, RISK CAT II, EXP B wind TC DL=3 5 psf, wind BC DL=5 0 psf GCpi(+/-)=0 18

Wind loads and reactions based on MWFRS with additional C&C member design

Deflection meets L/240 live and L/180 total load Creep increase factor for dead load is 1 50

R=-103 Rw=31 U=71 (1 5" min)

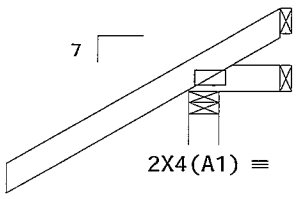

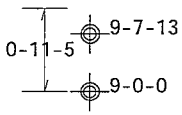

R=2 Rw=14 U=18 (1 5" min)

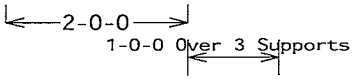

R=329 U=52 W=4' (4' min)
RL=28/-24

Design Crit FBC2010Res/TPI-2007(STD)
FT/RT=10%(0%)/0(0)

WILLIAM H. KRICK
LICENSE
No. 70861
STATE OF FLORIDA
PROFESSIONAL ENGINEER
04/19/2013

PLT TYP Wave 12.03 04.0326 14 QTY 12 FL/-/3/-/-/R/- Scale = 5"/Ft.

ALPINE
ITW Building Components Group Inc.
Haines City, FL 33844
FL COA #0 278

WARNING READ AND FOLLOW ALL NOTES ON THIS SHEET!
IMPORTANT FURNISH THIS DESIGN TO ALL CONTRACTORS INCLUDING INSTALLERS

Trusses require extreme care in fabr cating handl ng sh pp ng installing and bracing Refer to and follow the latest edition of BCSI (Bu lding Component Safety Information by TPI and WTCA) for safety pract ces prior to performing these functions Installers shall provide temporary brac ng per BCSI. Unless noted otherwise top chord shall have properly attached structural sheathing and bottom chord shall have a properly attached rigid ce ling Locat ons shown for permanent lateral restraint of web shall have bracing installed per BCSI sections B3 B7 or B10 as applicable

ITW Building Components Group Inc (ITWBCG) shall not be responsible for any deviat on from this design, any failure to bu ld the truss n conformance w th ANSI/TPI 1 or for handl ng shipping nstallation & bracing of trusses Apply plates to each face of truss and pos t on as shown above and on the Joint Details unless noted otherw se Refer to draw ngs 160A-Z for standard plate pos tions A seal on this drawing or cover page list ng th s draw ng ind cates acceptance of professional engineer ng respons bility solely for the design shown The su tability and use of this des gn for any structure is the responsibility of the Building Des gner per ANSI/TPI 1 Sec 2 For more nformation see This job s general notes page ITW-BCG www twbcg com TPI www tpinst org WTCA www sbc ndustry com ICC www iccsafe org

TC LL	20.0 PSF	REF	R487-- 40059
TC DL	7 0 PSF	DATE	04/19/13
BC DL	10 0 PSF	DRW	HCUSR487 13109012
BC LL	0.0 PSF	HC-ENG	WHK/WHK
TOT LD	37.0 PSF	SEQN-	10768
DUR.FAC.	1.25		
SPACING	24.0"	JREF-	1UV1487_Z05

THIS DWG PREPARED FROM COMPUTER INPUT (LOADS & DIMENSIONS) SUBMITTED BY TRUSS MFR

(13-097--BRYAN ZECHER Mowry Residence -- SW Dusk Glen Rd Lake City, FL 32024 - CJ3 3 Jack)

Top chord 2x4 SP_#1_12A
Bot chord 2x4 SP_#1_12A

Lumber grades designated with 12A use design values approved 1/5/2012 by ALSC

Bottom chord checked for 10 00 psf non-concurrent live load

Provide (2) 16d common nails(0 162"x3 5"), toe nailed at Top chord
Provide (2) 16d common nails(0 162 x3 5'), toe nailed at Bot chord

120 mph wind, 15 00 ft mean hgt, ASCE 7-10, CLOSED bldg, Located anywhere in roof RISK CAT II, EXP B, wind TC DL=3 5 psf, wind BC DL=5 0 psf GCpi(+/-)=0 18

Wind loads and reactions based on MWFRS with additional C&C member design

Deflection meets L/240 live and L/180 total load Creep increase factor for dead load is 1 50

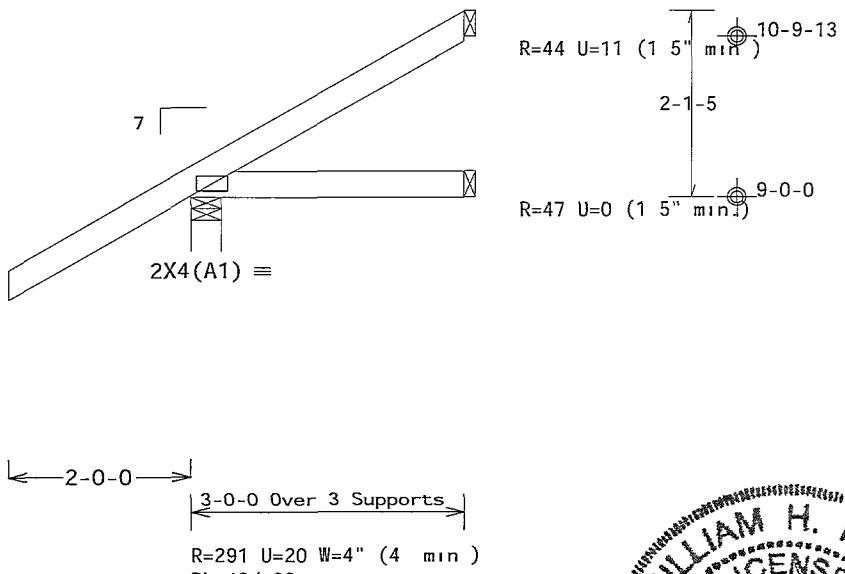

Design Crit. FBC2010Res/TPI-2007(STD)
FT/RT=10%(0%)/0(0)

PLT TYP. Wave

12.03.04.0326.14 QTY=12 FL/-/3/-/-/R/- Scale =.5"/Ft.

WILLIAM H. KRICK
LICENSE
No. 70861
STATE OF FLORIDA
PROFESSIONAL ENGINEER

04/19/2013

ALPINE
ITW Building Components Group Inc.
Haines City, FL 33844
FL COA #0 278

WARNING READ AND FOLLOW ALL NOTES ON THIS SHEET!
IMPORTANT FURNISH THIS DESIGN TO ALL CONTRACTORS INCLUDING INSTALLERS

Trusses require extreme care n fabricating handling shipping installing and brac ng Refer to and follow the latest ed tion of BCSI (Building Component Safety Information by TPI and WTCA) for safety practices pr or to performing these functions Installers shall prov de temporary bracing per BCSI Unless noted otherw se top chord shall have properly attached structural sheathing and bottom chord shall have a properly attached r gid ceiling Locations shown for permanent lateral restraint of shall have bracing installed per BCSI sect ons B3 B7 or B10 as appl cable

ITW Build ng Components Group Inc (ITWBCG) shall not be responsible for any deviation from this design any failure to bu ld the truss in conformance with ANSI/TPI 1 or for handling shipping installation brac ng of trusses Apply plates to each face of truss and position as shown above and on the Jo nt Details unless noted otherwise Refer to drawings 160A-Z for standard plate posit ons A seal on this drawing or cover page l st ng this drawing ndicates acceptance of professional engineer ng respons bility solely for the des gn shown The suitabil ty and use of th s des gn for any structure is the responsibility of the Bu lding Des gner per ANSI/TPI 1 Sec 2 For more information see This job s general notes page ITW BCG www twbcg com TPI www tpinst org WTCA www sbcindustry com ICC www iccsafe org

TC LL	20.0 PSF	REF R487-- 40060
TC DL	7 0 PSF	DATE 04/19/13
BC DL	10.0 PSF	DRW HCUSR487 13109013
BC LL	0.0 PSF	HC-ENG WHK/WHK
TOT.LD.	37.0 PSF	SEQN- 10769
DUR.FAC.	1.25	
SPACING	24.0"	JREF- 1UVI487_Z05

(13-097--BRYAN ZECHER Mowry Residence -- SW Dusk Glen Rd Lake City, FL 32024 - CJ5 5 Jack)

Top chord 2x4 SP_#1_12A
Bot chord 2x4 SP_#1_12A

Lumber grades designated with "12A" use design values approved 1/5/2012 by ALSC

Bottom chord checked for 10 00 psf non-concurrent live load

Provide (2) 16d common nails(0 162'x3 5'), toe nailed at Top chord
Provide (2) 16d common nails(0 162 x3 5"), toe nailed at Bot chord

120 mph wind, 15 00 ft mean hgt, ASCE 7-10, CLOSED bldg, not located within 4 50 ft from roof edge, RISK CAT II, EXP B, wind TC DL=3 5 psf, wind BC DL=5 0 psf GCpi(+/-)=0 18

Wind loads and reactions based on MWFRS with additional C&C member design

Deflection meets L/240 live and L/180 total load Creep increase factor for dead load is 1 50

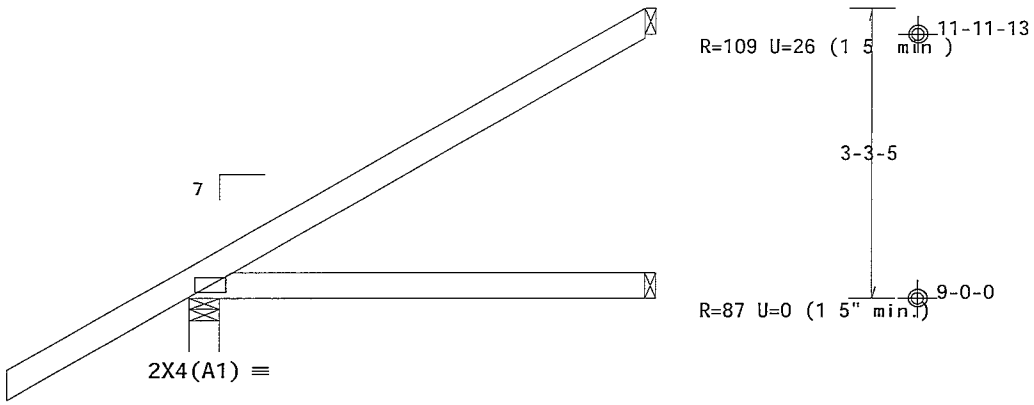

2-0-0

5-0-0 Over 3 Supports

R=347 U=13 W=4" (4" min)
RL=67/-33

Design Crit· FBC2010Res/TPI-2007(STD)
FT/RT=10%(0%)/0(0)

WILLIAM H. KRICK LICENSE No. 70861 STATE OF FLORIDA PROFESSIONAL ENGINEER
04/19/2013

PLT TYP. Wave 12.03 04 0326.14 1 TOTY 9 FL/-/3/-/-/R/- Scale =.5"/Ft.

ALPINE
ITW Building Components Group Inc.
Haines City, FL 33844
FL COA #0 278

WARNING READ AND FOLLOW ALL NOTES ON THIS SHEET!
IMPORTANT FURNISH THIS DESIGN TO ALL CONTRACTORS INCLUDING INSTALLERS

Trusses require extreme care in fabr cat ng handl ng shipp ng nstalling and bracing Refer to and follow the latest edition of BCSI (Bu ld ng Component Safety Information by TPI and WTCA) for safety practices pr or to perform ng these funct ons Installers shall provide temporary brac ng per BCSI. Unless noted otherw se top chord shall have properly attached structural sheath ng and bottom chord shall have a properly attached rigid ce l ng Locat ons shown for permanent lateral restraint of webs shall have brac ng nstalled per BCSI sect ons B3 B7 or B10 as applicable

ITW Build ng Components Group Inc (ITWBCG) shall not be responsible for any deviat on from th s design, any fa lure to bu ld the truss n conformance with ANSI/TPI 1 or for handl ng shipp ng nstallation & bracing of trusses Apply plates to each face of truss and position as shown above and on the Jo nt Deta ls unless noted otherw se Refer to drawings 160A-Z for standard plate posit ons A seal on th s draw ng or cover page l st ng th s drawing nd cates acceptance of profess onal eng neer ng responsibil ty solely for the des gn shown The suitabil ty and use of th s des gn for any structure s the respons b l ty of the Build ng Designer per ANSI/TPI 1 Sec 2 For more nformat on see Th s job s general notes page ITW-BCG www itwbcg com TPI www tp nst org WTCA www sbc ndustry com ICC www ccsafe org

TC LL	20 0 PSF	REF	R487-- 40061
TC DL	7 0 PSF	DATE	04/19/13
BC DL	10.0 PSF	DRW	HCUSR487 13109014
BC LL	0 0 PSF	HC-ENG	WHK/WHK
TOT LD	37.0 PSF	SEQN-	10770
DUR FAC	1 25		
SPACING	24 0"	JREF-	1UV1487_Z05

(13-097--BRYAN ZECHER Mowry Residence -- SW Dusk Glen Rd Lake City, FL 32024 - CJ5B 5 Jack)

Top chord 2x4 SP_#1_12A
Bot chord 2x4 SP_#1_12A

Lumber grades designated with 12A" use design values approved 1/5/2012 by ALSC

Bottom chord checked for 10 00 psf non-concurrent live load

Provide (2) 16d common nails(0 162'x3 5'), toe nailed at Top chord
Provide (2) 16d common nails(0 162 x3 5'), toe nailed at Bot chord

120 mph wind, 15 00 ft mean hgt, ASCE 7-10, CLOSED bldg, not located within 4 50 ft from roof edge, RISK CAT II, EXP B, wind TC DL=3 5 psf, wind BC DL=5 0 psf GCpi(+/-)=0 18

Wind loads and reactions based on MWFRS with additional C&C member design

Deflection meets L/240 live and L/180 total load Creep increase factor for dead load is 1 50

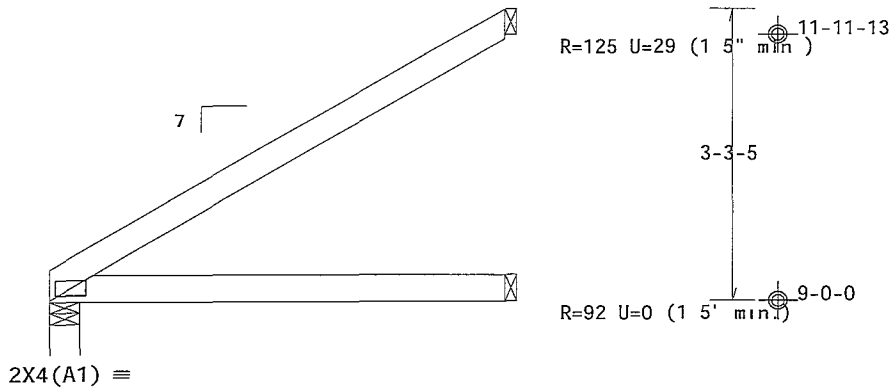

5-0-0 Over 3 Supports

R=196 U=0 W=4 (4 min)
RL=48

Design Crit FBC2010Res/TPI-2007(STD)
FT/RT=10%(0%)/0(0)

PLT TYP Wave

1: 03 04 0826 14 QTY 1 FL/-/3/-/-/R/- Scale =.5"/Ft.

WILLIAM H. KRICK LICENSE No. 70861 STATE OF FLORIDA PROFESSIONAL ENGINEER

04/19/2013

ALPINE
ITW Building Components Group Inc.
Haines City, FL 33844
FL COA #0 278

WARNING READ AND FOLLOW ALL NOTES ON THIS SHEET!
IMPORTANT FURNISH THIS DESIGN TO ALL CONTRACTORS INCLUDING INSTALLERS

Trusses require extreme care in fabr cat ng hand ng sh pp ng nstall ng and bracing Refer to and follow the latest edition of BCSI (Bu ld ng Component Safety Information by TPI and WTCA) for safety pract ces pr or to performing these funct ons Installers shall provide temporary bracing per BCSI Unless noted otherw se top chord shall have properly attached structural sheath ng and bottom chord shall have a properly attached r gid ceil ng Locat ons shown for permanent lateral restraint of web shall have brac ng nstalled per BCSI sections B3 B7 or B10 as applicable

ITW Building Components Group Inc (ITWBCG) shall not be respons ble for any dev at on from th s design nor any fa lure to bu ld the truss in conformance w th ANSI/TPI 1 or for handl ng sh pp ng nstallat on and bracing of trusses Apply plates to each face of truss and pos t on as shown above and on the Joint Deta ls unless noted otherw se Refer to draw ngs 160A-Z for standard plate pos tions A seal on this draw ng or cover page listing this draw ng ind cates acceptance of professional engineering respons bil ty solely for the design shown The su tab lity and use of this design for any structure is the respons bility of the Bu lding Des gner per ANSI/TPI 1 Sec 2 For more informat on see Th s job s general notes page ITW BCG www twbcg com TPI www tpinst org WTCA www sbcindustry com ICC www iccsafe org

TC LL	20.0 PSF	REF	R487-- 40062
TC DL	7 0 PSF	DATE	04/19/13
BC DL	10 0 PSF	DRW	HCUSR487 13109015
BC LL	0 0 PSF	HC-ENG	WHK/WHK
TOT LD	37 0 PSF	SEQN-	10771
DUR FAC.	1.25		
SPACING	24.0"	JREF-	1UV1487_Z05

(13-097--BRYAN ZECHER Mowry Residence -- SW Dusk Glen Rd Lake City, FL 32024 - CJ5T 5 Jack)

Top chord 2x4 SP_#1_12A
Bot chord 2x4 SP_#1_12A
Webs 2x4 SP_#3__12A

Lumber grades designated with "12A" use design values approved 1/5/2012 by ALSC

Bottom chord checked for 10 00 psf non-concurrent live load

Provide (2) 16d common nails(0 162"x3 5"), toe nailed at Top chord
Provide (2) 16d common nails(0 162"x3 5"), toe nailed at Bot chord

120 mph wind, 15 00 ft mean hgt, ASCE 7-10, CLOSED bldg, not located within 4 50 ft from roof edge, RISK CAT II, EXP B, wind TC DL=3 5 psf, wind BC DL=5 0 psf GCpi(+/-)=0 18

Wind loads and reactions based on MWFRS with additional C&C member design

Deflection meets L/240 live and L/180 total load Creep increase factor for dead load is 1 50

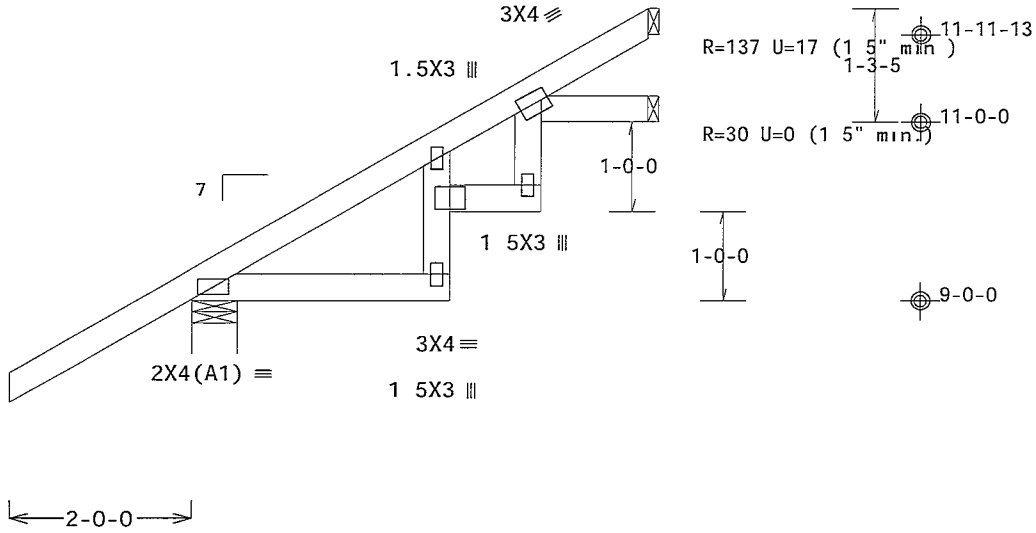

R=347 U=12 W=6" (6" min)
RL=67/-33

Design Crit· FBC2010Res/TPI-2007(STD)
FT/RT=10%(0%)/0(0)

WILLIAM H. KRICK LICENSE No. 70861 STATE OF FLORIDA PROFESSIONAL ENGINEER
04/19/2013

PLT TYP. Wave 12.03.04 0326.14 TOTY 2 FL/-/3/-/-/R/- Scale =.5"/Ft.

ALPINE
ITW Building Components Group Inc.
Haines City, FL 33844
FL COA #0 278

WARNING READ AND FOLLOW ALL NOTES ON THIS SHEET!
IMPORTANT FURNISH THIS DESIGN TO ALL CONTRACTORS INCLUDING INSTALLERS

Trusses require extreme care n fabricating handling sh pp ng install ng and brac ng Refer to and follow the latest edition of BCSI (Building Component Safety Informat on by TPI and WTCA) for recommended practices prior to perform ng these functions Installers shall provide temporary bracing per BCSI Unless noted otherwise top chord shall have properly attached structural sheathing and bottom chord shall have a properly attached r g d ce l ng Locat ons shown for permanent lateral restra nt of webs shall have bracing installed per BCSI sect ons B3 B7 or B10 as appl cable

ITW Build ng Components Group Inc (ITWBCG) shall not be responsible for any deviation from th s design n any failure to build the truss n conformance with ANSI/TPI 1 or for handling shipp ng installation and bracing of trusses Apply plates to each face of truss and position as shown above and on the Jo nt Deta ls unless noted otherwise Refer to drawings 160A-Z for standard plate posit ons A seal on this draw ng or cover page l sting th s drawing indicates acceptance of professional eng neering responsib l ty solely for the design shown The suitabil ty and use of this design for any structure s the responsib l ty of the Build ng Designer per ANSI/TPI 1 Sec 2 For more nformat on see Th s job s general notes page ITW-BCG www itwbcg com TPI www tp nst org WTCA www sbcindustry com ICC www ccsafe org

TC LL	20.0 PSF	REF	R487-- 40063
TC DL	7.0 PSF	DATE	04/19/13
BC DL	10.0 PSF	DRW	HCUSR487 13109016
BC LL	0.0 PSF	HC-ENG	WHK/WHK
TOT.LD.	37 0 PSF	SEQN-	10772
DUR.FAC	1.25		
SPACING	24.0"	JREF-	1UV1487_Z05

(13-097--BRYAN ZECHER Mowry Residence -- SW Dusk Glen Rd Lake City, FL 32024 - CPB 8'7"14 Common)

Top chord 2x4 SP_#1_12A
Bot chord 2x4 SP_#1_12A
Webs 2x4 SP_#3__12A

Lumber grades designated with "12A' use design values approved 1/5/2012 by ALSC

Wind loads and reactions based on MWFRS with additional C&C member design

In lieu of rigid ceiling use purlins to brace BC @ 24' OC

MWFRS loads based on trusses located at least 20 27 ft from roof edge

Special loads
------(Lumber Dur Fac =1 25 / Plate Dur Fac =1 25)
TC- From 56 plf at -0 79 to 56 plf at 3 50
TC- From 56 plf at 3 50 to 56 plf at 7 79
BC- From 4 plf at -0 79 to 4 plf at 7 79

120 mph wind, 20 27 ft mean hgt, ASCE 7-10, CLOSED bldg, Located anywhere in roof, RISK CAT II, EXP B, wind TC DL=3 5 psf, wind BC DL=2 0 psf GCpi(+/-)=0 18

Deflection meets L/240 live and L/180 total load Creep increase factor for dead load is 1 50

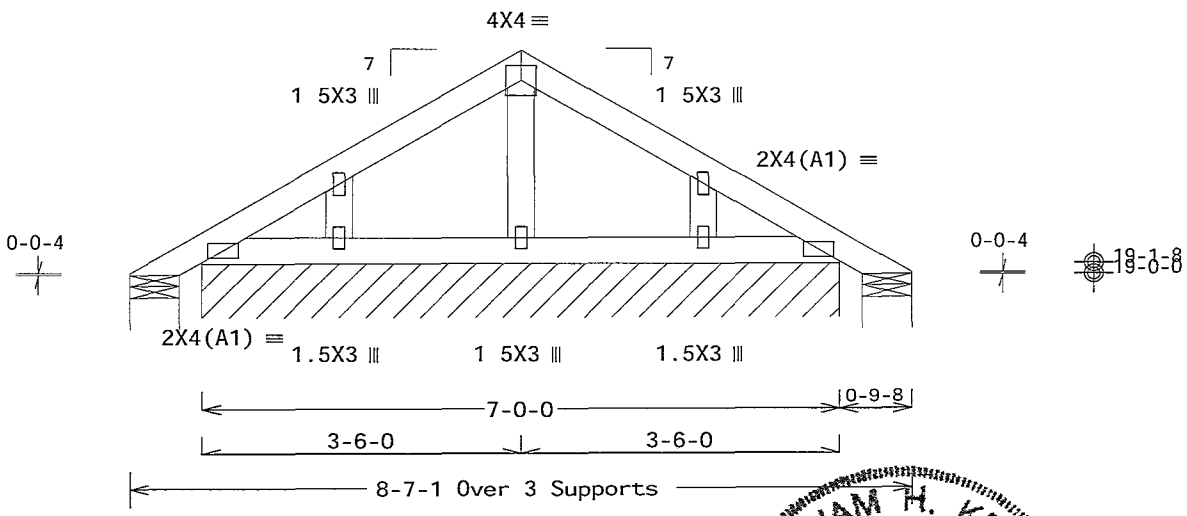

R=17 Rw=29 U=16 W=6 518" (6 518" min)
RL=38/R365 PLF U=4 PLF W=7-0-0

R=17 U=1 W=6 518" (6 518" min)

Design Crit: FBC2010Res/TPI-2007(STD)
FT/RT=10%(0%)/0(0) 12.03.04.0826.14 OTL-10 FL/-/3/-/-/R/-

PLT TYP. Wave

Scale =.5"/Ft.

WILLIAM H. KRICK LICENSE No. 70861 STATE OF FLORIDA PROFESSIONAL ENGINEER
04/19/2013

ALPINE
ITW Building Components Group Inc.
Haines City, FL 33844
FL COA #0 278

WARNING READ AND FOLLOW ALL NOTES ON THIS SHEET!
IMPORTANT FURNISH THIS DESIGN TO ALL CONTRACTORS INCLUDING INSTALLERS

Trusses require extreme care in fabricating handl ng shipping nstalling and bracing Refer to and follow the latest ed tion of BCSI (Building Component Safety Information by TPI and WTCA) for safety practices pr or to performing these functions Installers shall provide temporary bracing per BCSI Unless noted otherw se top chord shall have properly attached structural sheath ng and bottom chord shall have a properly attached r gid ceiling Locations shown for permanent lateral restraint shall have bracing installed per BCSI sections B3 B7 or B10 as applicable

ITW Bu lding Components Group Inc (ITWBCG) shall not be responsible for any dev ation from this design any fa lure to build the truss in conformance with ANSI/TPI 1 or for handling sh pping installation brac ng of trusses Apply plates to each face of truss and position as shown above and on the Joint Deta ls unless noted otherwise Refer to drawings 160A-Z for standard plate positions A seal on this draw ng or cover page l sting this drawing indicates acceptance of professional engineering responsibil ty solely for the design shown The suitability and use of this design for any structure s the responsibil ty of the Build ng Designer per ANSI/TPI 1 Sec 2 For more informat on see Th s job s general notes page ITW-BCG www twbcg com TPI www tpinst org WTCA www sbc ndustry com ICC www iccsafe org

TC LL	20 0 PSF	REF	R487-- 40064
TC DL	7.0 PSF	DATE	04/19/13
BC DL	10.0 PSF	DRW	HCUSR487 13109017
BC LL	0.0 PSF	HC-ENG	WHK/WHK
TOT.LD.	37.0 PSF	SEQN-	10773
DUR FAC.	1.25		
SPACING	24 0"	JREF-	1UV1487_Z05

Top chord 2x4 SP_#1_12A
Bot chord 2x4 SP_#1_12A
Webs 2x4 SP_#3__12A

Lumber grades designated with '12A' use design values approved 1/5/2012 by ALSC

120 mph wind, 19 73 ft mean hgt, ASCE 7-10, CLOSED bldg, Located anywhere in roof RISK CAT II, EXP B, wind TC DL=3 5 psf wind BC DL=2 0 psf GCpi(+/-)=0 18

Wind loads and reactions based on MWFRS with additional C&C member design

Refer to DWG PB1400310 for piggyback details

Special loads
------(Lumber Dur Fac =1 25 / Plate Dur Fac =1 25)

TC- From	56 plf at	-0 79 to	56 plf at	1 64
TC- From	56 plf at	1 64 to	56 plf at	5 36
TC- From	56 plf at	5 36 to	56 plf at	7 79
BC- From	4 plf at	-0 79 to	4 plf at	7 79

In lieu of structural panels or rigid ceiling use purlins to brace all flat TC @ 24 OC, all BC @ 24' OC

Deflection meets L/240 live and L/180 total load Creep increase factor for dead load is 1 50

MWFRS loads based on trusses located at least 9 87 ft from roof edge

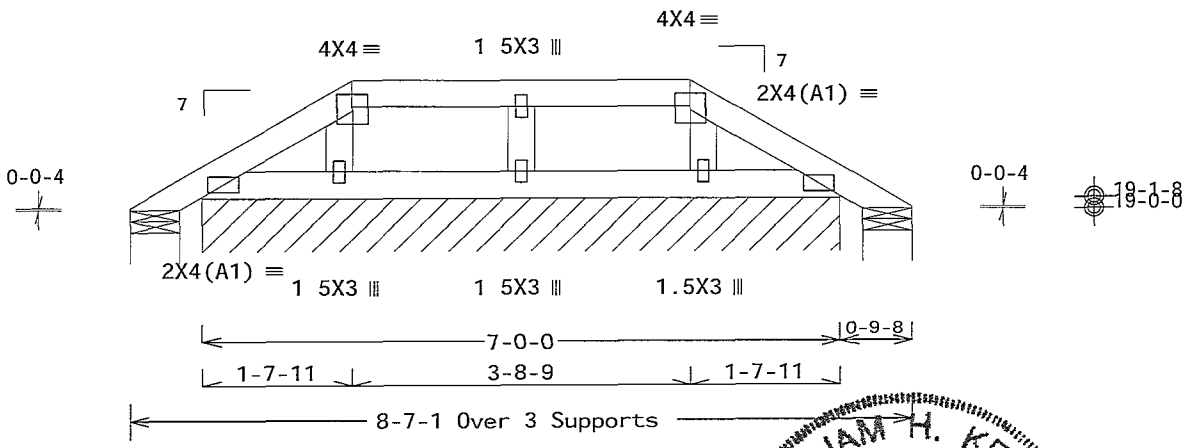

R=13 Rw=20 U=8 W=6 518 (6 518 min)
RL=20/R266 PLF U=10 PLF W=7-0-0

Design Crit FBC2010Res/TPI-2007(STD)
FT/RT=10%(0%)/0(0)

PLT TYP Wave

1 03 04 0326 14 QTY 1 FL/-/3/-/-/R/- Scale =.5"/Ft.

WILLIAM H. KRUCK LICENSED No. 70861 STATE OF FLORIDA PROFESSIONAL ENGINEER
04/19/2013

ALPINE
ITW Building Components Group Inc.
Haines City, FL 33844
FL COA #0 278

WARNING READ AND FOLLOW ALL NOTES ON THIS SHEET!
IMPORTANT FURNISH THIS DESIGN TO ALL CONTRACTORS INCLUDING INSTALLERS

Trusses requ re extreme care n fabr cat ng handl ng shipping installing and bracing Refer to and fol ow the latest ed t on of BCSI (Build ng Component Safety Information by TPI and WTCA) for safety practices pr or to performing these functions Installers shall prov de temporary bracing per BCSI Unless noted otherw se top chord shall have properly attached structural sheathing and bottom chord shall have a properly attached r g d ceiling Locations shown for permanent lateral restra nt of webs shall have bracing installed per BCSI sections B3 B7 or B10 as applicable

ITW Build ng Components Group Inc (ITWBCG) shall not be respons ble for any dev ation from th s design any failure to build the truss n conformance with ANSI/TPI 1 or for handling sh pping installat on or bracing of trusses Apply plates to each face of truss and position as shown above and on the Jo nt Details unless noted otherwise Refer to drawings 160A-Z for standard plate posit ons A seal on th s drawing or cover page l sting th s drawing nd cates acceptance of profess onal eng neering responsibility solely for the des gn shown The suitabil ty and use of th s des gn for any structure s the responsibil ty of the Building Designer per ANSI/TPI 1 Sec 2 For more nformation see Th s job s general notes page ITW BCG www twbcg com TPI www tp nst org WTCA www sbc ndustry com ICC www iccsafe org

TC LL	20.0 PSF	REF	R487-- 40065
TC DL	7 0 PSF	DATE	04/19/13
BC DL	10 0 PSF	DRW	HCUSR487 13109018
BC LL	0.0 PSF	HC-ENG	WHK/WHK
TOT LD.	37 0 PSF	SEQN-	10774
DUR FAC.	1 25		
SPACING	24 0"	JREF-	1UVI487_Z05

THIS DWG PREPARED FROM COMPUTER INPUT (LOADS & DIMENSIONS) SUBMITTED BY TRUSS MFR

(13-097--BRYAN ZECHER Mowry Residence -- SW Dusk Glen Rd Lake City, FL 32024 - D 10 4' Common)

Top chord 2x4 SP_#1_12A
Bot chord 2x4 SP_#1_12A

Lumber grades designated with 12A use design values approved 1/5/2012 by ALSC

Left cantilever is exposed to wind

Deflection meets L/240 live and L/180 total load Creep increase factor for dead load is 1 50

120 mph wind, 15 00 ft mean hgt, ASCE 7-10, CLOSED bldg, Located anywhere in roof, RISK CAT II, EXP B, wind TC DL=3 5 psf, wind BC DL=5 0 psf GCpi(+/-)=0 18

Wind loads and reactions based on MWFRS with additional C&C member design

Bottom chord checked for 10 00 psf non-concurrent live load

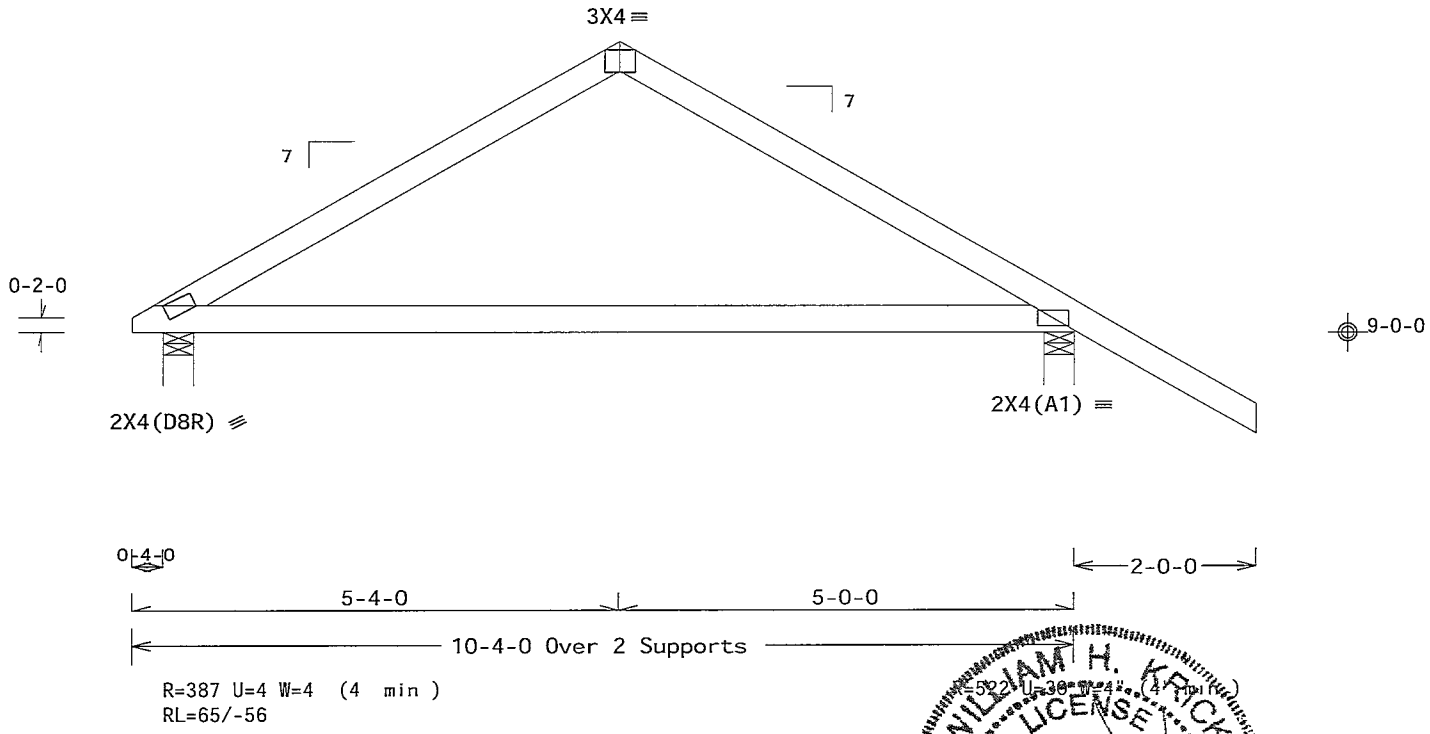

Design Crit FBC2010Res/TPI-2007(STD)
FT/RT=10%(0%)/0(0)

PLT TYP. Wave

12 03 04 0826 14 QTY 1

FL/-/3/-/-/R/-

Scale =.5"/Ft.

WILLIAM H. KRICK LICENSE No. 70861 STATE OF FLORIDA PROFESSIONAL ENGINEER

04/19/2013

ALPINE
ITW Building Components Group Inc.
Haines City, FL 33844
FL COA #0 278

WARNING READ AND FOLLOW ALL NOTES ON THIS SHEET!
IMPORTANT FURNISH THIS DESIGN TO ALL CONTRACTORS INCLUDING INSTALLERS

Trusses require extreme care in fabr cating handl ng sh pp ng nstall ng and bracing Refer to and follow the latest edition of BCSI (Bu ld ng Component Safety Information by TPI and WTCA) for safety pract ces prior to perform ng these functions Installers shall provide temporary brac ng per BCSI Unless noted otherwise top chord shall have properly attached structural sheath ng and bottom chord shall have a properly attached rigid ce l ng Locat ons shown for permanent lateral restra nt shall have bracing nstalled per BCSI sect ons B3 B7 or B10 as applicable

ITW Build ng Components Group Inc (ITWBCG) shall not be responsible for any deviat on from th s drawing any failure to bu ld the truss n conformance with ANSI/TPI 1 or for handling shipp ng nstallation brac ng of trusses Apply plates to each face of truss and position as shown above and on the Jo nt Details unless noted otherwise Refer to draw ngs 160A-Z for standard plate posit ons A seal on th s drawing or cover page l st ng th s drawing ndicates acceptance of profess onal eng neer ng responsibility solely for the des gn shown The suitabil ty and use of th s des gn for any structure s the responsib l ty of the Bu ld ng Designer per ANSI/TPI 1 Sec 2 For more nformation see This job s general notes page ITW-BCG www twbcg com TPI www tp nst org WTCA www sbc ndustry com ICC www ccsafe org

TC LL	20 0 PSF	REF	R487-- 40066
TC DL	7 0 PSF	DATE	04/19/13
BC DL	10 0 PSF	DRW	HCUSR487 13109060
BC LL	0.0 PSF	HC-ENG	WHK/WHK
TOT.LD.	37.0 PSF	SEQN-	10775
DUR.FAC	1.25		
SPACING	24 0"	JREF-	1UV1487_Z05

THIS DWG PREPARED FROM COMPUTER INPUT (LOADS & DIMENSIONS) SUBMITTED BY TRUSS MFR

(13-097--BRYAN ZECHER Mowry Residence -- SW Dusk Glen Rd Lake City, FL 32024 - D1 10'4' Common)

Top chord 2x4 SP_#1_12A
Bot chord 2x4 SP_#1_12A

Lumber grades designated with "12A" use design values approved 1/5/2012 by ALSC

Bottom chord checked for 10 00 psf non-concurrent live load

120 mph wind, 15 00 ft mean hgt, ASCE 7-10, CLOSED bldg, not located within 4 50 ft from roof edge, RISK CAT II, EXP B, wind TC DL=3 5 psf, wind BC DL=5 0 psf GCpi(+/-)=0 18

Wind loads and reactions based on MWFRS with additional C&C member design

Deflection meets L/240 live and L/180 total load Creep increase factor for dead load is 1 50

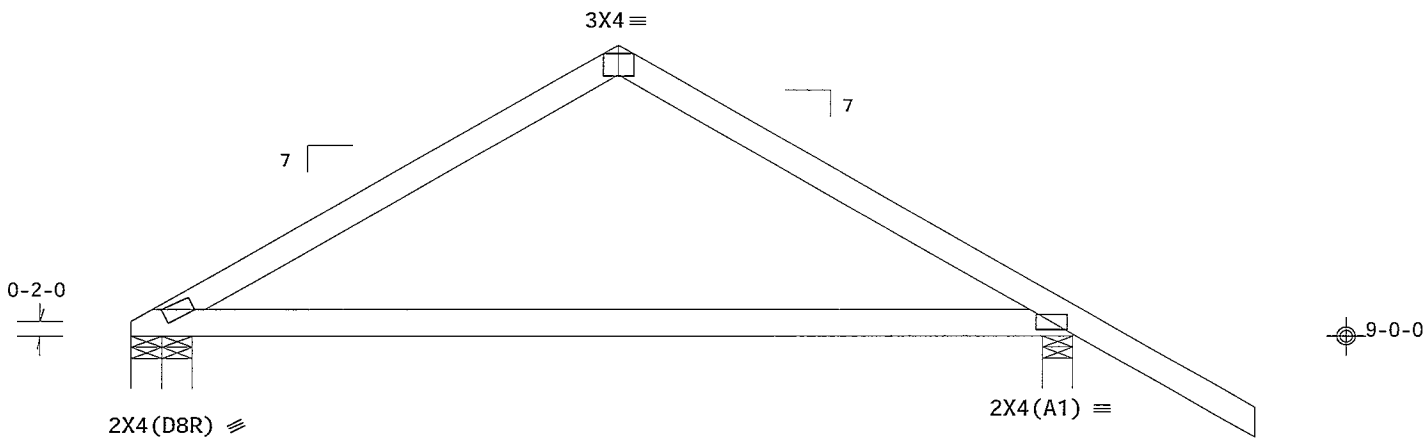

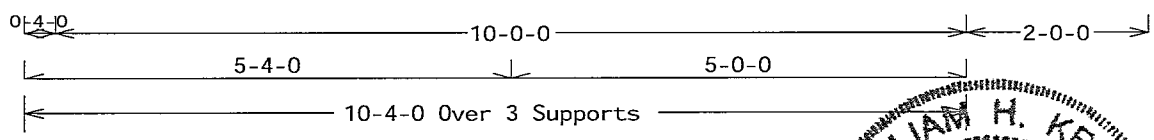

R=0 U=0 W=4" (4' min)
R=379 U=5 W=4" (4" min)
RL=65/-56

Design Crit. FBC2010Res/TPI-2007(STD)
FT/RT=10%(0%)/0(0)

PLT TYP Wave

12.03.04.0326 14 QTY 1

FL/-/3/-/-/R/- Scale =.5"/Ft.

WILLIAM H. KRICK
LICENSE
No. 70861
STATE OF FLORIDA
PROFESSIONAL ENGINEER

04/19/2013

ALPINE
ITW Building Components Group Inc.
Haines City, FL 33844
FL COA #0 278

WARNING READ AND FOLLOW ALL NOTES ON THIS SHEET!
IMPORTANT FURNISH THIS DESIGN TO ALL CONTRACTORS INCLUDING INSTALLERS

Trusses require extreme care in fabr cat ng handl ng shipping nstalling and bracing Refer to and follow the latest edition of BCSI (Build ng Component Safety Information by TPI and WTCA) for [illegible] pract ces pr or to performing these funct ons Installers shall provide temporary bracing per BCSI Unless noted otherw se top chord shall have properly attached structural sheath ng and bottom chord shall have a properly attached r gid ce l ng Locations shown for permanent lateral restraint of [illegible] shall have brac ng nstalled per BCSI sections B3 B7 or B10 as applicable

ITW Building Components Group Inc (ITWBCG) shall not be respons ble for any dev ation from this design any fa lure to build the truss in conformance with ANSI/TPI 1 or for handl ng sh pping nstallation & bracing of trusses Apply plates to each face of truss and pos t on as shown above and on the Joint Details unless noted otherw se Refer to draw ngs 160A-Z for standard plate pos tions A seal on this drawing or cover page list ng this draw ng nd cates acceptance of profess onal engineering respons bility solely for the design shown The su tab lity and use of this des gn for any structure s the responsibility of the Bu ld ng Des gner per ANSI/TPI 1 Sec 2 For more nformation see This job s general notes page ITW BCG www twbcg com TPI www tpinst org WTCA www sbc ndustry com ICC www iccsafe org

TC LL	20 0 PSF	REF	R487-- 40067
TC DL	7.0 PSF	DATE	04/19/13
BC DL	10.0 PSF	DRW	HCUSR487 13109019
BC LL	0.0 PSF	HC-ENG	WHK/WHK
TOT LD	37.0 PSF	SEQN-	10776
DUR.FAC.	1.25		
SPACING	24 0"	JREF-	1UVI487_Z05

THIS DWG PREPARED FROM COMPUTER INPUT (LOADS & DIMENSIONS) SUBMITTED BY TRUSS MFR

(13-097--BRYAN ZECHER Mowry Residence -- SW Dusk Glen Rd Lake City, FL 32024 - D2 10 4 Common)

Top chord 2x4 SP_#1_12A
Bot chord 2x4 SP_#1_12A
Webs 2x4 SP_#3__12A

Lumber grades designated with "12A" use design values approved 1/5/2012 by ALSC

Left end vertical not exposed to wind pressure

Bottom chord checked for 10 00 psf non-concurrent live load

MWFRS loads based on trusses located at least 7 50 ft from roof edge

120 mph wind, 15 00 ft mean hgt, ASCE 7-10, CLOSED bldg, not located within 4 50 ft from roof edge, RISK CAT II, EXP B, wind TC DL=3 5 psf, wind BC DL=5 0 psf GCpi(+/-)=0 18

Wind loads and reactions based on MWFRS with additional C&C member design

In lieu of structural panels use purlins to brace all flat TC @ 24" OC

Deflection meets L/240 live and L/180 total load Creep increase factor for dead load is 1 50

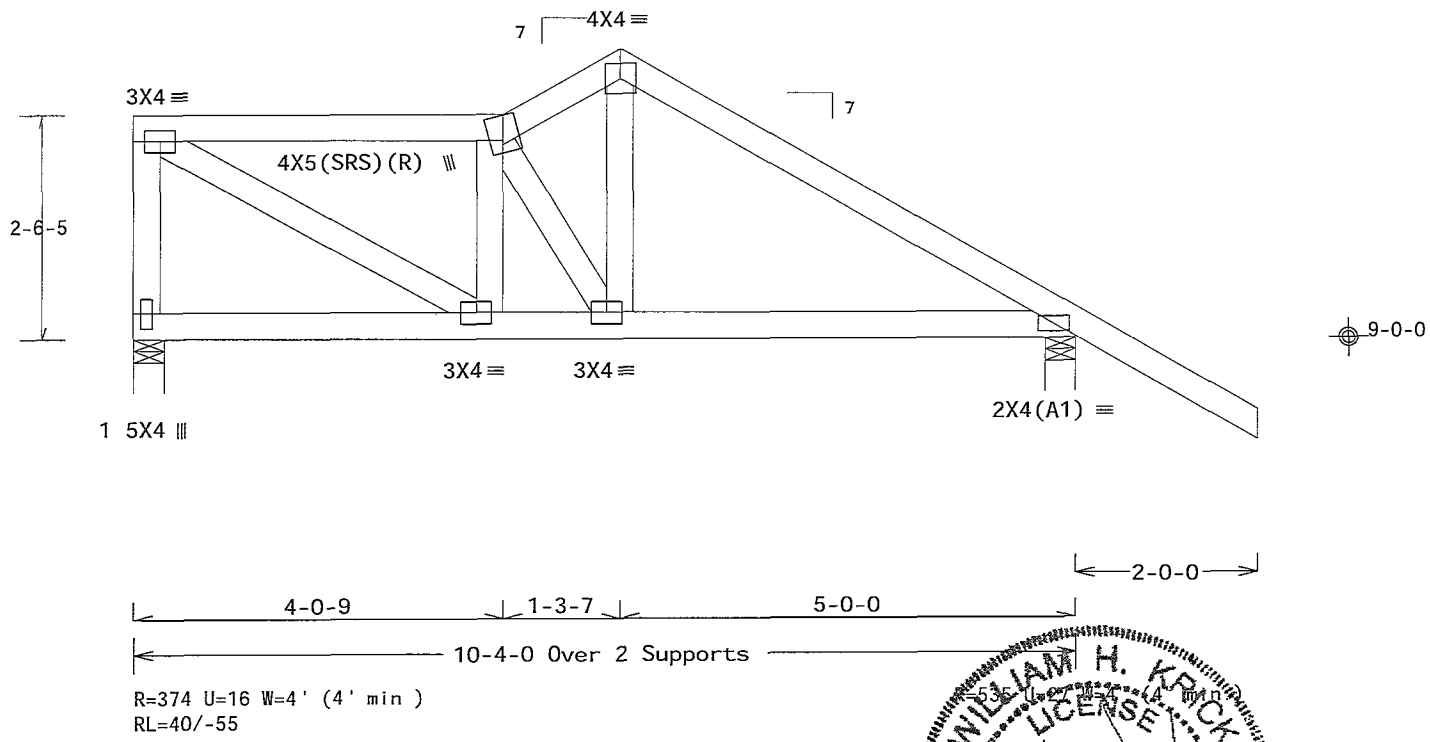

Design Crit· FBC2010Res/TPI-2007(STD)
FT/RT=10%(0%)/0(0)

PLT TYP Wave

12 03 04 0326.14 0TY 1

FL/-/3/-/-/R/-

Scale =.5"/Ft.

TC LL	20 0 PSF	REF	R487-- 40068
TC DL	7 0 PSF	DATE	04/19/13
BC DL	10.0 PSF	DRW	HCUSR487 13109020
BC LL	0 0 PSF	HC-ENG	WHK/WHK
TOT.LD	37.0 PSF	SEQN-	10777
DUR FAC	1 25		
SPACING	24.0"	JREF-	1UV1487_Z05

WILLIAM H. KRUCK LICENSE No. 70861 STATE OF FLORIDA PROFESSIONAL ENGINEER

04/19/2013

ALPINE
ITW Building Components Group Inc.
Haines City FL 33844
FL COA #0 278

WARNING READ AND FOLLOW ALL NOTES ON THIS SHEET!
IMPORTANT FURNISH THIS DESIGN TO ALL CONTRACTORS INCLUDING INSTALLERS

Trusses requ re extreme care n fabr cating handling sh pp ng install ng and brac ng Refer to and follow the latest edition of BCSI (Bu lding Component Safety Informat on by TPI and WTCA) for safety pract ces prior to perform ng these funct ons Installers shall provide temporary brac ng per BCSI Unless noted otherwise top chord shall have properly attached structural sheath ng and bottom chord shall have a properly attached rigid ce l ng Locat ons shown for permanent latera: restra nt of webs shall have brac ng nstalled per BCSI sect ons B3 B7 or B10 as appl cable

ITW Build ng Components Group Inc (ITWBCG) shall not be responsible for any deviat on from th s design any failure to bu ld the truss n conformance with ANSI/TPI 1 or for handl ng shipp ng nstallat on bracing of trusses Apply plates to each face of truss and position as shown above and on the Jo nt Details unless noted otherw se Refer to draw ngs 160A-Z for standard plate posit ons A seal on th s drawing or cover page l st ng th s draw ng nd cates acceptance of profess onal eng neer ng respons bility solely for the des gn shown The su tabil ty and use of th s des gn for any structure s the responsib l ty of the Bu ld ng Des gner per ANSI/TPI 1 Sec 2 For more nformation see This job s general notes page ITW BCG www twbcg com TPI www tp nst org WTCA www sbc ndustry com ICC www ccsafe org

(13-097--BRYAN ZECHER Mowry Residence -- SW Dusk Glen Rd Lake City, FL 32024 - D3 10 4' Common)

THIS DWG PREPARED FROM COMPUTER INPUT (LOADS & DIMENSIONS) SUBMITTED BY TRUSS MFR

Top chord 2x4 SP_#1_12A
Bot chord 2x4 SP_#1_12A
Webs 2x4 SP_#3__12A

Lumber grades designated with '12A' use design values approved 1/5/2012 by ALSC

Left end vertical not exposed to wind pressure

Bottom chord checked for 10 00 psf non-concurrent live load

MWFRS loads based on trusses located at least 7 50 ft from roof edge

120 mph wind, 15 00 ft mean hgt, ASCE 7-10, CLOSED bldg, not located within 9 00 ft from roof edge, RISK CAT II, EXP B, wind TC DL=3 5 psf, wind BC DL=5 0 psf GCpi(+/-)=0 18

Wind loads and reactions based on MWFRS with additional C&C member design

In lieu of structural panels use purlins to brace all flat TC @ 24" OC

Deflection meets L/240 live and L/180 total load Creep increase factor for dead load is 1 50

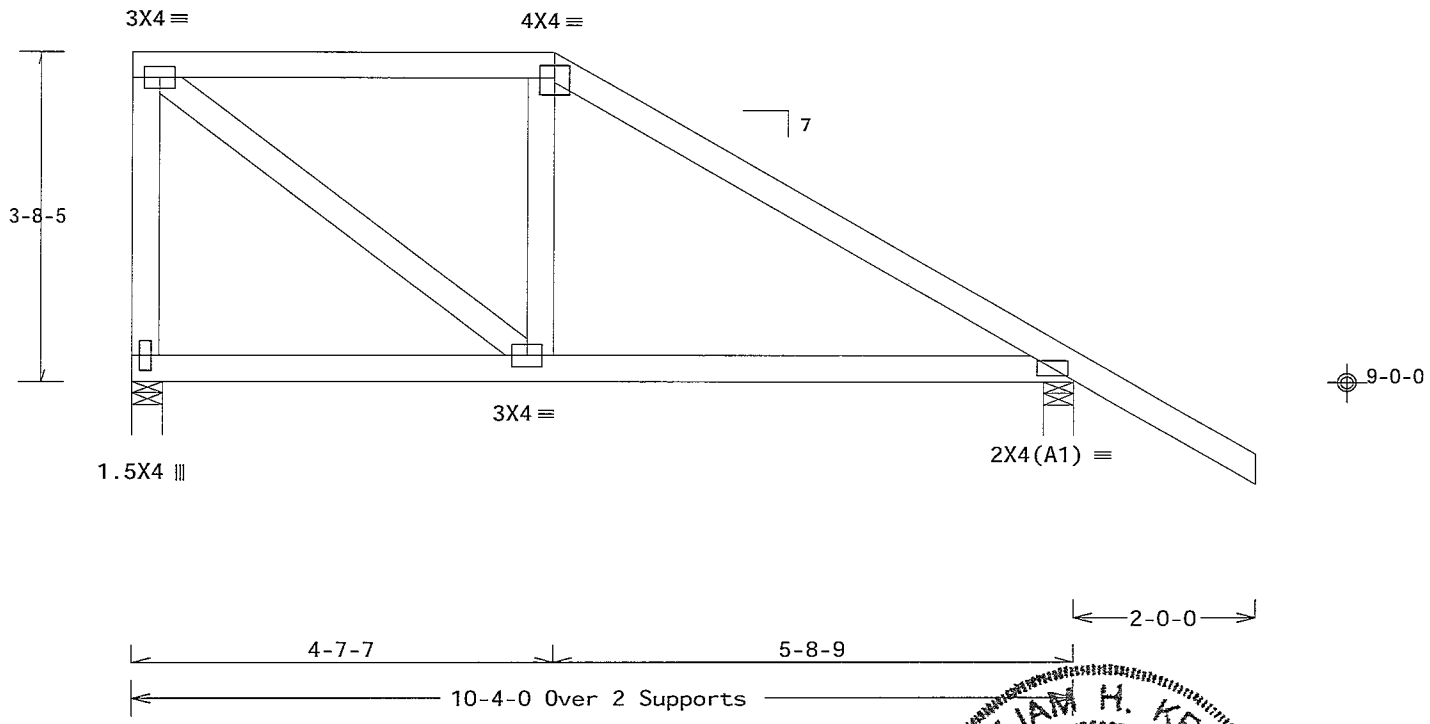

R=374 U=22 W=4 (4' min)
RL=34/-74

Design Crit· FBC2010Res/TPI-2007(STD)
FT/RT=10%(0%)/0(0)

PLT TYP Wave

12.03.04.0336 14 QTY 1

FL/-/3/-/-/R/- Scale =.5"/Ft.

TC LL	20.0 PSF	REF	R487-- 40069
TC DL	7.0 PSF	DATE	04/19/13
BC DL	10.0 PSF	DRW	HCUSR487 13109021
BC LL	0.0 PSF	HC-ENG	WHK/WHK
TOT.LD	37 0 PSF	SEQN-	10778
DUR.FAC.	1.25		
SPACING	24 0"	JREF-	1UV1487_Z05

WILLIAM H. KRICK LICENSE No. 70861 STATE OF FLORIDA PROFESSIONAL ENGINEER
04/19/2013

ALPINE
ITW Building Components Group Inc.
Haines City, FL 33844
FL COA #0 278

WARNING READ AND FOLLOW ALL NOTES ON THIS SHEET!
IMPORTANT FURNISH THIS DESIGN TO ALL CONTRACTORS INCLUDING INSTALLERS

Trusses require extreme care n fabr cating handling sh pp ng install ng and brac ng Refer to and follow the latest edition of BCSI (Bu ld ng Component Safety Informat on by TPI and WTCA) for recommended pract ces prior to perform ng these funct ons Installers shall prov de temporary brac ng per BCSI. Unless noted otherwise top chord shall have properly attached structural sheath ng and bottom chord shall have a properly attached rigid ce l ng Locat ons shown for permanent lateral restraint of webs shall have brac ng nstalled per BCSI sect ons B3 B7 or B10 as appl cable

ITW Building Components Group Inc (ITWBCG) shall not be responsible for any deviat on from th s design, any failure to bu ld the truss n conformance w th ANSI/TPI 1 or for handl ng shipp ng nstallat on & bracing of trusses Apply plates to each face of truss and position as shown above and on the Jo nt Details unless noted otherw se Refer to draw ngs 160A-Z for standard plate pos tions A seal on th s drawing or cover page l st ng th s drawing ndicates acceptance of profess onal eng neer ng responsibility solely for the des gn shown The su tabil ty and use of this des gn for any structure is the responsibil ty of the Build ng Designer per ANSI/TPI 1 Sec 2 For more nformation see This job s general notes page ITW-BCG www twbcg com TPI www tpinst org WTCA www sbc ndustry com ICC www iccsafe org

(13-097--BRYAN ZECHER Mowry Residence -- SW Dusk Glen Rd Lake City, FL 32024 - D4 10 4' Common)

Top chord 2x4 SP_#1_12A
Bot chord 2x4 SP_#1_12A
Webs 2x4 SP_#3__12A

Lumber grades designated with "12A" use design values approved 1/5/2012 by ALSC

Left end vertical not exposed to wind pressure

Bottom chord checked for 10 00 psf non-concurrent live load

MWFRS loads based on trusses located at least 7 50 ft from roof edge

120 mph wind, 15 00 ft mean hgt, ASCE 7-10, CLOSED bldg, not located within 9 00 ft from roof edge, RISK CAT II, EXP B, wind TC DL=3 5 psf, wind BC DL=5 0 psf GCpi(+/-)=0 18

Wind loads and reactions based on MWFRS with additional C&C member design

In lieu of structural panels use purlins to brace all flat TC @ 24" OC

Deflection meets L/240 live and L/180 total load Creep increase factor for dead load is 1 50

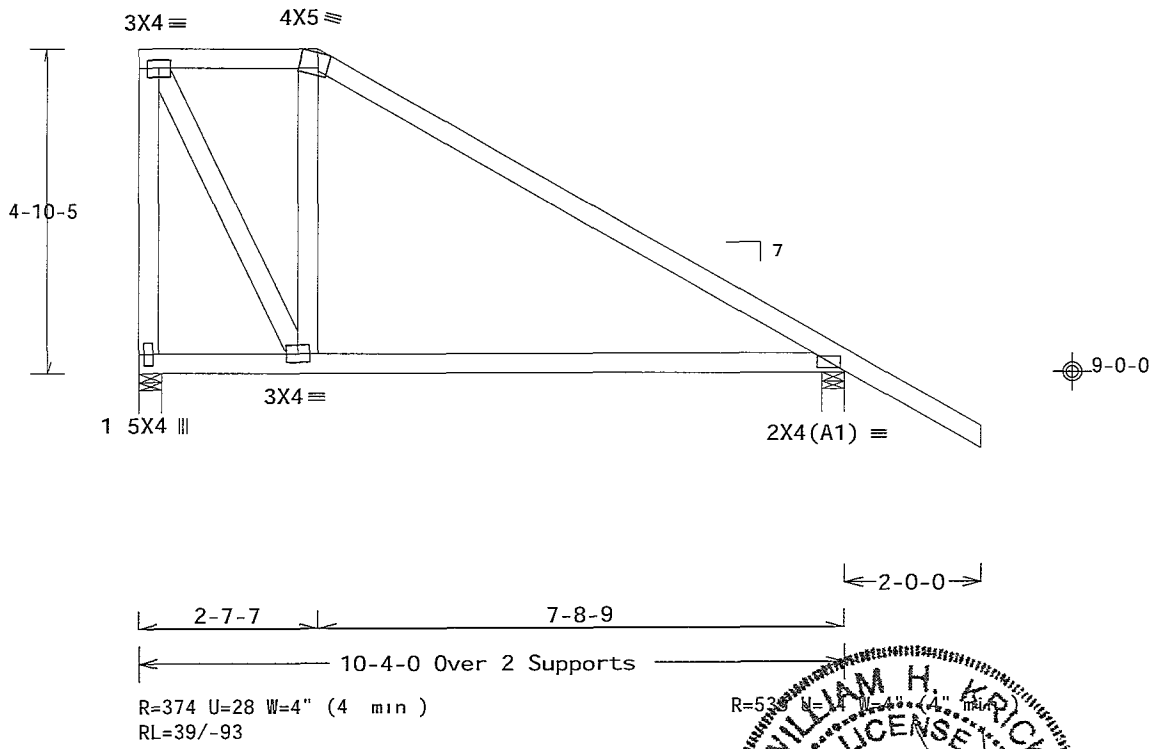

Design Crit: FBC2010Res/TPI-2007(STD)
FT/RT=10%(0%)/0(0)

PLT TYP. Wave

12.03 04 0326 14 QTY:1 FL/-/3/-/-/R/- Scale =.375"/Ft.

WILLIAM H. KRICK LICENSE No. 70861 STATE OF FLORIDA PROFESSIONAL ENGINEER
04/19/2013

ALPINE
ITW Building Components Group Inc.
Haines City, FL 33844
FL COA #0 278

WARNING READ AND FOLLOW ALL NOTES ON THIS SHEET!
IMPORTANT FURNISH THIS DESIGN TO ALL CONTRACTORS INCLUDING INSTALLERS

Trusses requ re extreme care n fabricating handling shipping installing and bracing Refer to and follow the latest ed t on of BCSI (Building Component Safety Information by TPI and WTCA) for safety practices prior to performing these functions Installers shall provide temporary bracing per BCSI Unless noted otherw se top chord shall have properly attached structural sheathing and bottom chord shall have a properly attached r g d ceiling Locations shown for permanent lateral restraint of webs shall have bracing installed per BCSI sections B3 B7 or B10 as applicable

ITW Building Components Group Inc (ITWBCG) shall not be respons ble for any dev ation from this design any failure to build the truss n conformance with ANSI/TPI 1 or for handling shipping installation bracing of trusses Apply plates to each face of truss and position as shown above and on the Joint Details unless noted otherwise Refer to drawings 160A-Z for standard plate positions A seal on this drawing or cover page l sting th s drawing indicates acceptance of professional eng neer ng responsibility solely for the des gn shown The suitabil ty and use of this design for any structure s the respons b lity of the Build ng Designer per ANSI/TPI 1 Sec 2 For more nformat on see This job s general notes page ITW-BCG www twbcg com TPI www tpinst org WTCA www sbcindustry com ICC www iccsafe org

TC LL	20 0 PSF	REF	R487-- 40070
TC DL	7.0 PSF	DATE	04/19/13
BC DL	10.0 PSF	DRW	HCUSR487 13109022
BC LL	0 0 PSF	HC-ENG	WHK/WHK
TOT.LD.	37.0 PSF	SEQN-	10779
DUR FAC.	1 25		
SPACING	24.0"	JREF-	1UVI487_Z05

(13-097--BRYAN ZECHER Mowry Residence -- SW Dusk Glen Rd Lake City, FL 32024 - D5 10'4" Common)

Top chord 2x4 SP_#1_12A
Bot chord 2x4 SP_#1_12A
Webs 2x4 SP_#3__12A

Lumber grades designated with '12A" use design values approved 1/5/2012 by ALSC

Left end vertical not exposed to wind pressure

In lieu of structural panels use purlins to brace all flat TC @ 24 OC

MWFRS loads based on trusses located at least 7 50 ft from roof edge

(++) - This plate works for both joints covered

120 mph wind, 15 00 ft mean hgt, ASCE 7-10, CLOSED bldg, not located within 9 00 ft from roof edge, RISK CAT II, EXP B, wind TC DL=3 5 psf, wind BC DL=5 0 psf GCpi(+/-)=0 18

Wind loads and reactions based on MWFRS with additional C&C member design

Bottom chord checked for 10 00 psf non-concurrent live load

Deflection meets L/240 live and L/180 total load Creep increase factor for dead load is 1 50

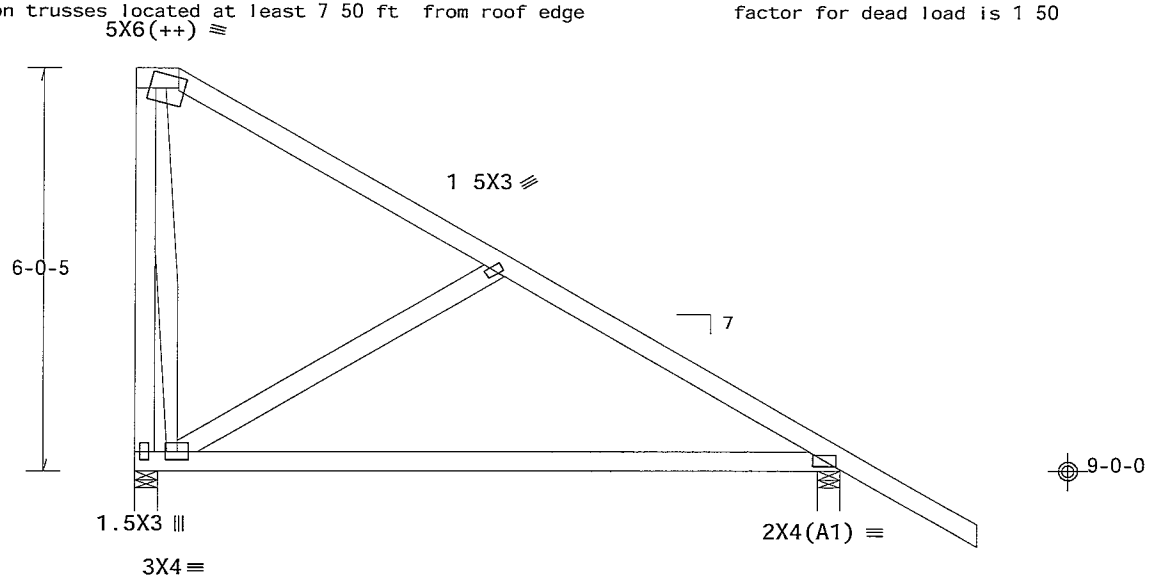

R=374 U=36 W=4" (4' min)
RL=43/-113

R=53 U=36 W=4" (4' min)

Design Crit FBC2010Res/TPI-2007(STD)
FT/RT=10%(0%)/0(0)

12 03 04.0326 14 TOTY 1

PLT TYP. Wave

FL/-/3/-/-/R/-

Scale = 375"/Ft

WILLIAM H. KRICK LICENSE No. 70861 STATE OF FLORIDA PROFESSIONAL ENGINEER

04/19/2013

ALPINE
ITW Building Components Group Inc.
Haines City, FL 33844
FL COA #0 278

WARNING READ AND FOLLOW ALL NOTES ON THIS SHEET!
IMPORTANT FURNISH THIS DESIGN TO ALL CONTRACTORS INCLUDING INSTALLERS

Trusses require extreme care n fabr cat ng handl ng sh pping nstall ng and brac ng Refer to and follow the latest edition of BCSI (Bu ld ng Component Safety Information by TPI and WTCA) for safety pract ces prior to performing these funct ons Installers shall provide temporary bracing per BCSI Unless noted otherwise top chord shall have properly attached structural sheath ng and bottom chord shall have a properly attached rigid ce l ng Locat ons shown for permanent lateral restra nt of webs shall have brac ng nstalled per BCSI sect ons B3 B7 or B10 as applicable

ITW Building Components Group Inc (ITWBCG) shall not be responsible for any deviat on from th s design any fa lure to bu ld the truss n conformance w th ANSI/TPI 1 or for handl ng sh pp ng nstallat on brac ng of trusses Apply plates to each face of truss and pos t on as shown above and on the Jo nt Details unless notod otherw se Refer to draw ngs 160A-Z for standard plate pos t ons A seal on th s drawing or cover page l st ng this draw ng nd cates acceptance of profess onal eng neer ng respons b lity solely for the des gn shown The su tab lity and use of this des gn for any structure is the responsibility of the Bu lding Des gner per ANSI/TPI 1 Sec 2 For more nformation see Th s job s general notes page ITW BCG www itwbcg com TPI www tp nst org WTCA www sbc ndustry com ICC www iccsafe org

TC LL	20 0 PSF	REF	R487-- 40071
TC DL	7 0 PSF	DATE	04/19/13
BC DL	10 0 PSF	DRW	HCUSR487 13109023
BC LL	0 0 PSF	HC-ENG	WHK/WHK
TOT LD	37 0 PSF	SEQN-	10780
DUR FAC	1.25		
SPACING	24 0"	JREF-	1UVI487_Z05

(13-097--BRYAN ZECHER Mowry Residence -- SW Dusk Glen Rd Lake City, FL 32024 - D6 10'4" Common)

Top chord 2x4 SP_#1_12A
Bot chord 2x4 SP_#1_12A
Webs 2x4 SP_#3__12A

Lumber grades designated with '12A" use design values approved 1/5/2012 by ALSC

Left end vertical not exposed to wind pressure

Bottom chord checked for 10 00 psf non-concurrent live load

Deflection meets L/240 live and L/180 total load Creep increase factor for dead load is 1 50

Full Height Blocking reinforcement required to prevent buckling of members over the bearings
bearing 1 located at 0 00

120 mph wind, 15 00 ft mean hgt, ASCE 7-10, CLOSED bldg, not located within 9 00 ft from roof edge, RISK CAT II, EXP B, wind TC DL=3 5 psf, wind BC DL=5 0 psf GCpi(+/-)=0 18

Wind loads and reactions based on MWFRS with additional C&C member design

MWFRS loads based on trusses located at least 15 00 ft from roof edge

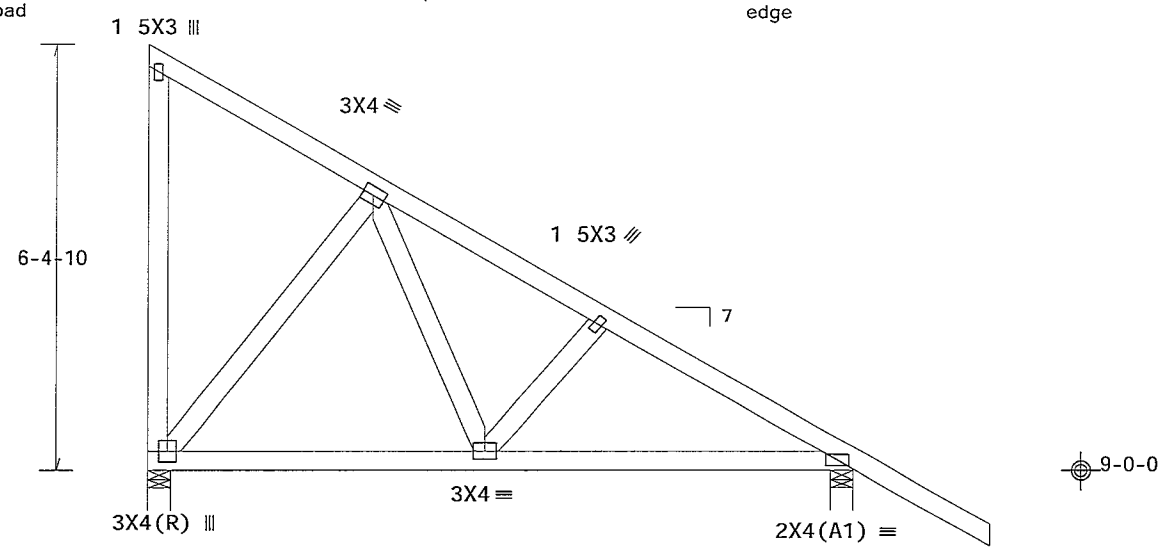

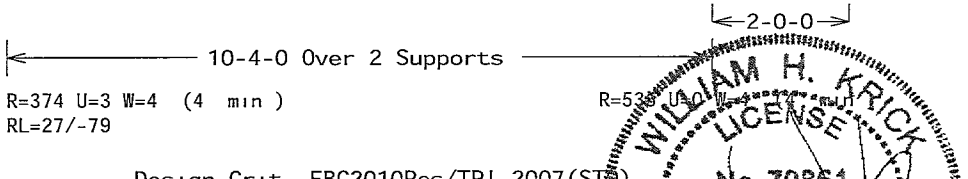

Design Crit FBC2010Res/TPI-2007(STD)
FT/RT=10%(0%)/0(0)

PLT TYP Wave

10 03 04 0826.14 QTY 2 FL/-/3/-/-/R/- Scale = 375"/Ft

WILLIAM H. KRICK LICENSE No. 70861 STATE OF FLORIDA PROFESSIONAL ENGINEER
04/19/2013

ALPINE
ITW Building Components Group Inc.
Haines City, FL 33844
FL COA #0 278

WARNING READ AND FOLLOW ALL NOTES ON THIS SHEET!
IMPORTANT FURNISH THIS DESIGN TO ALL CONTRACTORS INCLUDING INSTALLERS

Trusses require extreme care in fabr cat ng handl ng sh pp ng nstall ng and brac ng Refer to and follow the latest edition of BCSI (Bu ld ng Component Safety Informat on by TPI and WTCA) for safety pract ces prior to perform ng these functions Installers shall prov de temporary brac ng per BCSI Unless noted otherwise top chord shall have properly attached structural sheath ng and bottom chord shall have a properly attached r g d ce l ng Locat ons shown for permanent lateral restra nt of webs shall have bracing nstalled per BCSI sect ons B3 B7 or B10 as appl cable

ITW Build ng Components Group Inc (ITWBCG) shall not be responsible for any deviat on from th s dwg or any fa lure to bu ld the truss n conformance w th ANSI/TPI 1 or for handl ng shipp ng nstallat on and bracing of trusses Apply plates to each face of truss and pos t on as shown above and on the Joint Details unless noted otherw se Refer to draw ngs 160A-Z for standard plate pos tions A seal on this drawing or cover page list ng th s drawing nd cates acceptance of profess onal engineer ng respons bility solely for the des gn shown The su tabil ty and use of th s des gn for any structure s the responsib l ty of the Building Des gner per ANSI/TPI 1 Sec 2 For more nformation see This job s general notes page ITW-BCG www twbcg com TPI www tp nst org WTCA www sbc ndustry com ICC www iccsafe org

TC LL	20 0 PSF	REF	R487-- 40072
TC DL	7 0 PSF	DATE	04/19/13
BC DL	10 0 PSF	DRW	HCUSR487 13109024
BC LL	0 0 PSF	HC-ENG	WHK/WHK
TOT.LD	37 0 PSF	SEQN-	10781
DUR FAC	1 25		
SPACING	24.0"	JREF-	1UV1487_Z05

(13-097--BRYAN ZECHER Mowry Residence -- SW Dusk Glen Rd Lake City, FL 32024 - DDG 10'4' Gable)

Top chord 2x4 SP_#1_12A
Bot chord 2x4 SP_#1_12A
Webs 2x4 SP_#3__12A
Stack Chord SC1 2x4 SP_#1_12A Stack Chord SC2 2x4 SP_#1_12A

Lumber grades designated with '12A" use design values approved 1/5/2012 by ALSC

Stacked top chord must NOT be notched or cut in area (NNL) Dropped top chord braced at 24 o c intervals Attach stacked top chord (SC) to dropped top chord in notchable area using 3x4 tie-plates 24" o c Center plate on stacked/dropped chord interface, plate length perpendicular to chord length Splice top chord in notchable area using 3x6

120 mph wind, 15 00 ft mean hgt, ASCE 7-10, CLOSED bldg, Located anywhere in roof, RISK CAT II, EXP B, wind TC DL=3 5 psf, wind BC DL=5 0 psf GCpi(+/-)=0 18

Wind loads and reactions based on MWFRS with additional C&C member design

See DWGS A12015ENC100212, GBLLETIN0212, & GABRST100212 for more requirements

Bottom chord checked for 10 00 psf non-concurrent live load

Deflection meets L/240 live and L/180 total load Creep increase factor for dead load is 1 50

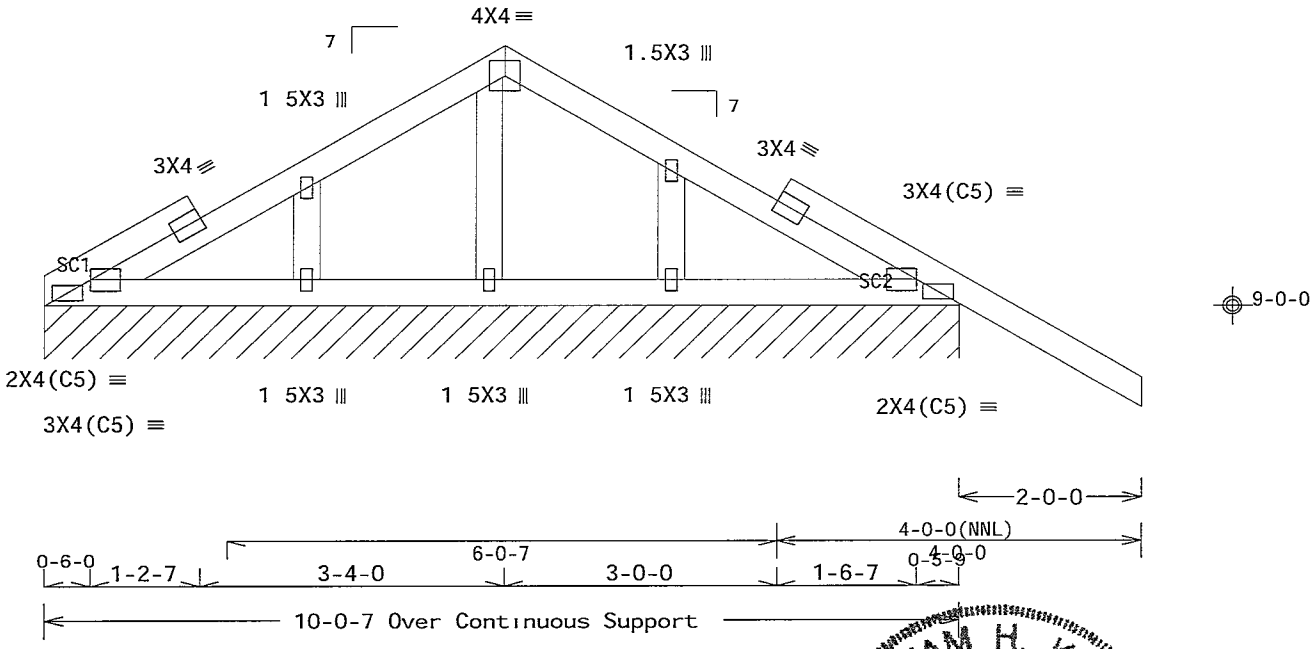

R=88 PLF U=3 PLF W=10-0-7
RL=6/-5 PLF

Design Crit· FBC2010Res/TPI-2007(STD)
FT/RT=10%(0%)/0(0)

PLT TYP. Wave

2.03.04.0326 14 QTY 1 FL/-/3/-/-/R/- Scale =.5"/Ft.

WILLIAM H. KRICK LICENSE No. 70861 STATE OF FLORIDA PROFESSIONAL ENGINEER

04/19/2013

ALPINE
ITW Building Components Group Inc.
Haines City, FL 33844
FL COA #0 278

WARNING READ AND FOLLOW ALL NOTES ON THIS SHEET!
IMPORTANT FURNISH THIS DESIGN TO ALL CONTRACTORS INCLUDING INSTALLERS

Trusses require extreme care in fabr cating handling sh pping install ng and bracing Refer to and follow the latest edit on of BCSI (Building Component Safety Informat on by TPI and WTCA) for safety practices prior to perform ng these functions Installers shall prov de temporary brac ng per BCSI Unless noted otherwise top chord shall have properly attached structural sheathing and bottom chord shall have a properly attached r g d ce l ng Locat ons shown for permanent lateral restra nt of webs shall have bracing installed per BCSI sect ons B3 B7 or B10 as appl cable

ITW Bu ld ng Components Group Inc (ITWBCG) shall not be respons ble for any deviation from this design any fa lure to build the truss in conformance with ANSI/TPI 1 or for handling sh pping installation brac ng of trusses Apply plates to each face of truss and position as shown above and on the Joint Deta ls unless noted otherwise Refer to drawings 160A-Z for standard plate positions A seal on this drawing or cover page listing this draw ng indicates acceptance of professional eng neering respons b l ty solely for the design shown The suitab lity and use of this design for any structure is the responsibility of the Bu lding Designer per ANSI/TPI 1 Sec 2 For more information see Th s job s general notes page ITW BCG www itwbcg com, TPI www tpinst org WTCA www sbcindustry com ICC www iccsafe org

TC LL	20.0 PSF	REF	R487-- 40073
TC DL	7.0 PSF	DATE	04/19/13
BC DL	10 0 PSF	DRW	HCUSR487 13109025
BC LL	0.0 PSF	HC-ENG	WHK/WHK
TOT.LD.	37.0 PSF	SEQN-	10782
DUR FAC.	1.25		
SPACING	24.0"	JREF-	1UV1487_Z05

THIS DWG PREPARED FROM COMPUTER INPUT (LOADS & DIMENSIONS) SUBMITTED BY TRUSS MFR

(13-097--BRYAN ZECHER Mowry Residence -- SW Dusk Glen Rd Lake City, FL 32024 - EJ7 7' End Jack)

Top chord 2x4 SP_#1_12A
Bot chord 2x4 SP_#1_12A

Lumber grades designated with "12A" use design values approved 1/5/2012 by ALSC

Bottom chord checked for 10 00 psf non-concurrent live load

MWFRS loads based on trusses located at least 7 50 ft from roof edge

120 mph wind, 15 00 ft mean hgt, ASCE 7-10, CLOSED bldg, Located anywhere in roof, RISK CAT II, EXP B, wind TC DL=3 5 psf, wind BC DL=5 0 psf GCpi(+/-)=0 18

Wind loads and reactions based on MWFRS with additional C&C member design

Deflection meets L/240 live and L/180 total load Creep increase factor for dead load is 1 50

Provide (2) 16d common nails(0 162"x3 5"), toe nailed at Top chord
Provide (2) 16d common nails(0 162"x3 5"), toe nailed at Bot chord

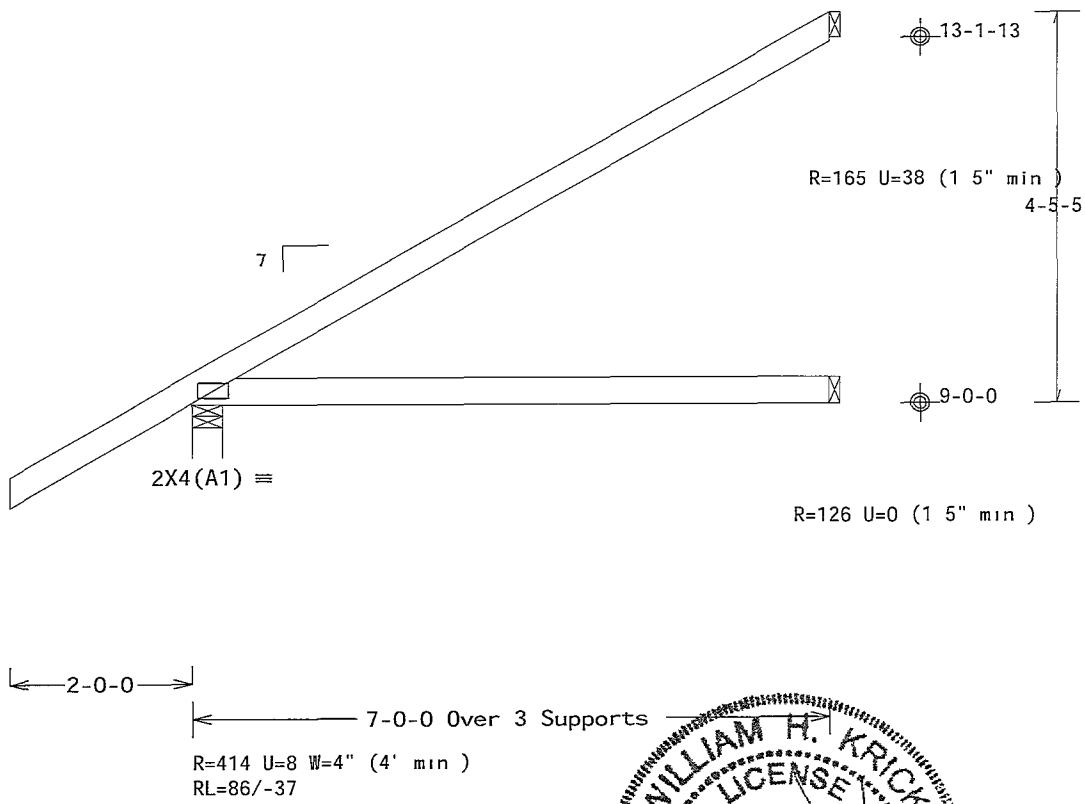

Design Crit FBC2010Res/TPI-2007(STD)
FT/RT=10%(0%)/0(0)

PLT TYP Wave

12.03.04.0826.14 QTY 40 FL/-/3/-/-/R/- Scale =.5"/Ft.

ALPINE
ITW Building Components Group Inc.
Haines City, FL 33844
FL COA #0 278

WARNING READ AND FOLLOW ALL NOTES ON THIS SHEET!
IMPORTANT FURNISH THIS DESIGN TO ALL CONTRACTORS INCLUDING INSTALLERS

Trusses require extreme care in fabr cat ng handl ng shipp ng installing and bracing Refer to and follow the latest ed tion of BCSI (Bu ld ng Component Safety Information by TPI and WTCA) for safety practices prior to performing these funct ons Installers shall provide temporary bracing per BCSI Unless noted otherw se top chord shall have properly attached structural sheath ng and bottom chord shall have a properly attached rigid ce l ng Locations shown for permanent lateral restraint of webs shall have brac ng installed per BCSI sections B3 B7 or B10 as applicable

ITW Building Components Group Inc (ITWBCG) shall not be responsible for any deviat on from this design any fa lure to bu ld the truss n conformance w th ANSI/TPI 1 or for handl ng shipp ng nstallat on and bracing of trusses Apply plates to each face of truss and pos tion as shown above and on the Jo nt Details unless noted otherwise Refer to draw ngs 160A-Z for standard plate pos tions A seal on this drawing or cover page list ng this draw ng ind cates acceptance of profess onal engineering respons b lity solely for the design shown The su tab lity and use of this des gn for any structure is the respons bility of the Bu ilding Des gner per ANSI/TPI 1 Sec 2 For more information see This job s general notes page ITW BCG www itwbcg com TPI www tpinst org WTCA www sbcindustry com ICC www iccsafe org

WILLIAM H. KRICK
LICENSE
No. 70861
STATE OF FLORIDA
PROFESSIONAL ENGINEER
04/19/2013

TC LL	20.0 PSF	REF	R487-- 40074
TC DL	7 0 PSF	DATE	04/19/13
BC DL	10.0 PSF	DRW	HCUSR487 13109061
BC LL	0.0 PSF	HC-ENG	WHK/WHK
TOT.LD.	37 0 PSF	SEQN-	10783
DUR.FAC.	1 25		
SPACING	24 0"	JREF-	1UV1487_Z05

THIS DWG PREPARED FROM COMPUTER INPUT (LOADS & DIMENSIONS) SUBMITTED BY TRUSS MFR

(13-097--BRYAN ZECHER Mowry Residence -- SW Dusk Glen Rd Lake City, FL 32024 - EJ7B 7 End Jack)

Top chord 2x4 SP_#1_12A
Bot chord 2x4 SP_#1_12A

Lumber grades designated with '12A" use design values approved 1/5/2012 by ALSC

Bottom chord checked for 10 00 psf non-concurrent live load

MWFRS loads based on trusses located at least 7 50 ft from roof edge

120 mph wind, 15 00 ft mean hgt, ASCE 7-10, CLOSED bldg, Located anywhere in roof, RISK CAT II, EXP B, wind TC DL=3 5 psf, wind BC DL=5 0 psf GCpi(+/-)=0 18

Wind loads and reactions based on MWFRS with additional C&C member design

Deflection meets L/240 live and L/180 total load Creep increase factor for dead load is 1 50

Provide (2) 16d common nails(0 162"x3 5'), toe nailed at Top chord
Provide (2) 16d common nails(0 162'x3 5'), toe nailed at Bot chord

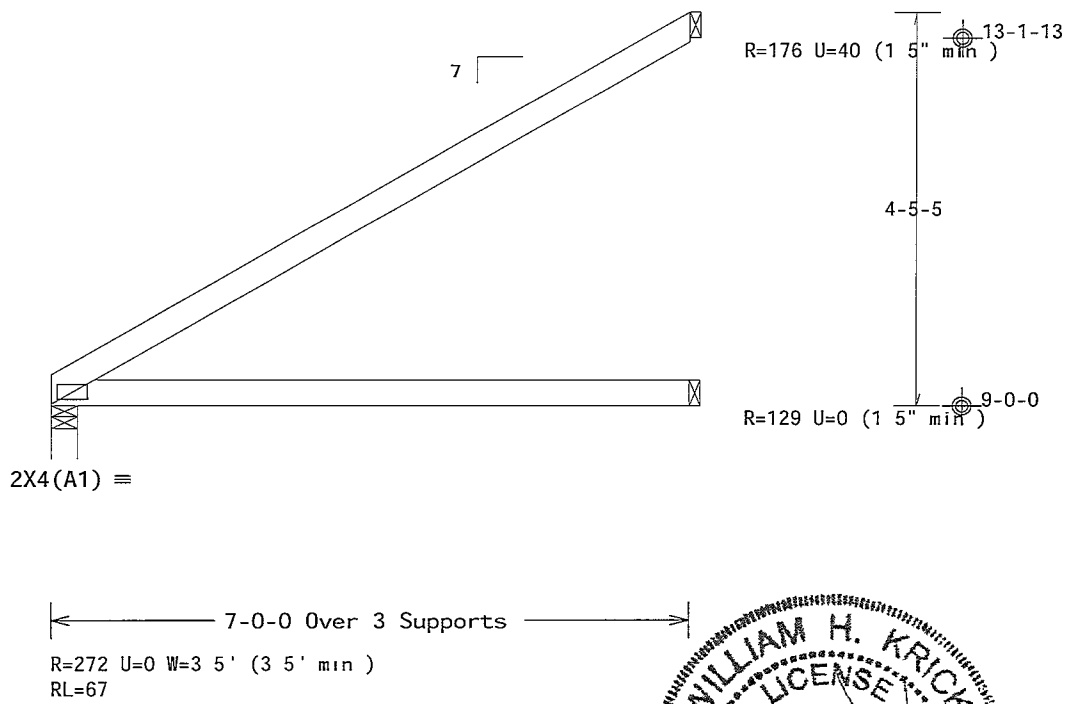

Design Crit FBC2010Res/TPI-2007(STD)
FT/RT=10%(0%)/0(0)

PLT TYP. Wave

12 03 04 0326 14 QTY 4 FL/-/3/-/-/R/- Scale =.5"/Ft.

WILLIAM H. KRICK
LICENSE
No. 70861
STATE OF FLORIDA
PROFESSIONAL ENGINEER

04/19/2013

ALPINE
ITW Building Components Group Inc.
Haines City, FL 33844
FL COA #0 278

WARNING READ AND FOLLOW ALL NOTES ON THIS SHEET!
IMPORTANT FURNISH THIS DESIGN TO ALL CONTRACTORS INCLUDING INSTALLERS

Trusses requ re extreme care n fabr cating handl ng sh pp ng install ng and brac ng Refer to and follow the latest edition of BCSI (Bu lding Component Safety Informat on by TPI and WTCA) for safety pract ces prior to perform ng these functions Installers shall prov de temporary brac ng per BCSI Unless noted otherwise top chord shall have properly attached structural sheathing and bottom chord shall have a properly attached r g d ce ling Locat ons shown for permanent lateral restra nt of shall have bracing installed per BCSI sect ons B3 B7 or B10 as appl cable

ITW Bu ld ng Components Group Inc (ITWBCG) shall not be responsible for any dev ation from this design any failure to build the truss n conformance with ANSI/TPI 1 or for handling sh pping installation brac ng of trusses Apply plates to each face of truss and position as shown above and on the Jo nt Deta ls unless noted otherwise Refer to drawings 160A-Z for standard plate posit ons A seal on th s draw ng or cover page l sting this drawing indicates acceptance of professional engineering responsib l ty solely for the design shown The suitability and use of this design for any structure s the respons b lity of the Build ng Designer per ANSI/TPI 1 Sec 2 For more informat on see Th s job s general notes page ITW BCG www itwbcg com TPI www tp nst org WTCA www sbcindustry com ICC www ccsafe org

TC LL	20.0 PSF	REF R487-- 40075
TC DL	7.0 PSF	DATE 04/19/13
BC DL	10 0 PSF	DRW HCUSR487 13109026
BC LL	0.0 PSF	HC-ENG WHK/WHK
TOT LD.	37.0 PSF	SEQN- 10784
DUR FAC	1.25	
SPACING	24.0"	JREF- 1UVI487_Z05

(13-097--BRYAN ZECHER Mowry Residence -- SW Dusk Glen Rd Lake City, FL 32024 - EJ7G 7' End Jack Girder)

Top chord 2x4 SP_#1_12A
Bot chord 2x4 SP_#1_12A
Webs 2x4 SP_#3__12A

Lumber grades designated with "12A" use design values approved 1/5/2012 by ALSC

Special loads
------(Lumber Dur Fac =1 25 / Plate Dur Fac =1 25)
TC- From 28 plf at 0 00 to 28 plf at 7 00
BC- From 10 plf at 0 00 to 10 plf at 7 00
BC- 348 05 lb Conc Load at 0 94, 2 94, 4 94

Wind loads and reactions based on MWFRS

Deflection meets L/240 live and L/180 total load Creep increase factor for dead load is 1 50

2 COMPLETE TRUSSES REQUIRED

Nail Schedule 0 131 x3 , min nails
Top Chord 1 Row @12 00 o c
Bot Chord 1 Row @10 25" o c
Webs 1 Row @ 4" o c
Use equal spacing between rows and stagger nails in each row to avoid splitting

120 mph wind, 15 00 ft mean hgt, ASCE 7-10, CLOSED bldg, Located anywhere in roof, RISK CAT II, EXP B, wind TC DL=3 5 psf, wind BC DL=5 0 psf GCpi(+/-)=0 18

Right end vertical not exposed to wind pressure

Provide (3) 16d common nails(0 162"x3 5"), toe nailed at Top chord
Provide (3) 16d common nails(0 162"x3 5"), toe nailed at Bot chord

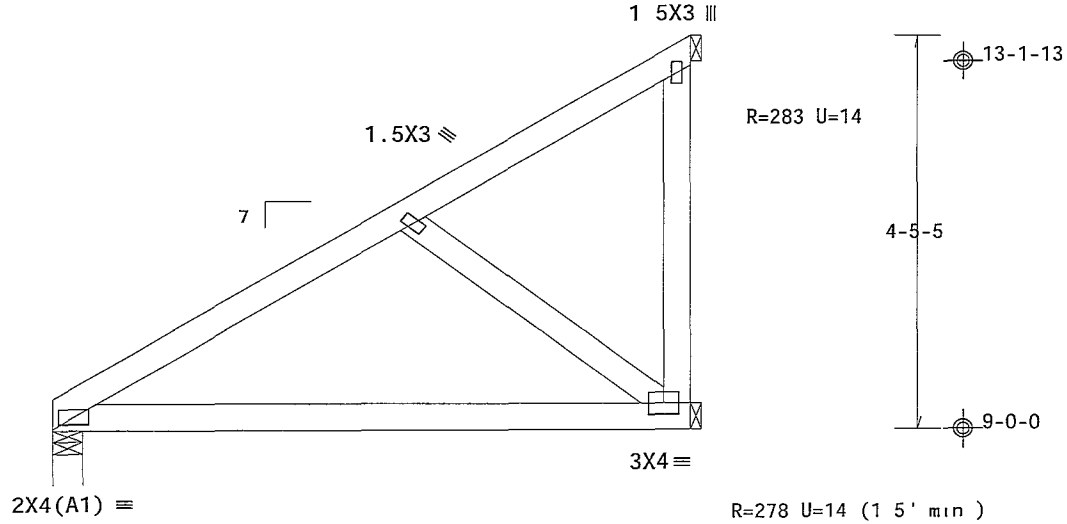

Design Crit. FBC2010Res/TPI-2007(STD)
FT/RT=10%(0%)/0(0) 12.03 04 0826.14 QTY 1 FL/-/3/-/-/R/- Scale =.5"/Ft.

PLT TYP Wave

WILLIAM H. KRICK LICENSE No. 70861 STATE OF FLORIDA PROFESSIONAL ENGINEER
04/19/2013

ALPINE
ITW Building Components Group Inc.
Haines City, FL 33844
FL COA #0 278

WARNING READ AND FOLLOW ALL NOTES ON THIS SHEET!
IMPORTANT FURNISH THIS DESIGN TO ALL CONTRACTORS INCLUDING INSTALLERS

Trusses requ re extreme care n fabricat ng handling shipping installing and brac ng Refer to and follow the latest ed t on of BCSI (Building Component Safety Information by TPI and WTCA) for safety practices pr or to performing these functions Installers shall provide temporary bracing per BCSI Unless noted otherw se top chord shall have properly attached structural sheathing and bottom chord shall have a properly attached r g d ceiling Locations shown for permanent lateral restraint shall have bracing installed per BCSI sections B3 B7 or B10 as applicable

ITW Building Components Group Inc (ITWBCG) shall not be respons ble for any dev ation from this design any failure to build the truss n conformance with ANSI/TPI 1 or for handling sh pping installation brac ng of trusses Apply plates to each face of truss and position as shown above and on the Jo nt Details unless noted otherwise Refer to drawings 160A-Z for standard plate posit ons A seal on th s draw ng or cover page l sting this drawing indicates acceptance of professional eng neer ng responsibil ty solely for the design shown The suitab lity and use of th s design for any structure s the respons b lity of the Building Designer per ANSI/TPI 1 Sec 2 For more informat on see Th s job s general notes page ITW-BCG www itwbcg com TPI www tpinst org WTCA www sbcindustry com ICC www ccsafe org

TC LL	20.0 PSF	REF	R487-- 40076
TC DL	7.0 PSF	DATE	04/19/13
BC DL	10.0 PSF	DRW	HCUSR487 13109027
BC LL	0 0 PSF	HC-ENG	WHK/WHK
TOT.LD	37 0 PSF	SEQN-	10811
DUR.FAC	1.25		
SPACING	24.0"	JREF-	1UV1487_Z05

(13-097--BRYAN ZECHER Mowry Residence -- SW Dusk Glen Rd Lake City, FL 32024 - EJ7T 7' End Jack)

Top chord 2x4 SP_#1_12A
Bot chord 2x4 SP_#1_12A
Webs 2x4 SP_#3__12A

Lumber grades designated with "12A" use design values approved 1/5/2012 by ALSC

Bottom chord checked for 10 00 psf non-concurrent live load

Deflection meets L/240 live and L/180 total load Creep increase factor for dead load is 1 50

Provide (2) 16d common nails(0 162"x3 5"), toe nailed at Top chord
Provide (2) 16d common nails(0 162'x3 5"), toe nailed at Bot chord

120 mph wind, 15 00 ft mean hgt, ASCE 7-10, CLOSED bldg, Located anywhere in roof, RISK CAT II, EXP B, wind TC DL=3 5 psf, wind BC DL=5 0 psf GCpi(+/-)=0 18

Wind loads and reactions based on MWFRS with additional C&C member design

Right end vertical not exposed to wind pressure

MWFRS loads based on trusses located at least 7 50 ft from roof edge

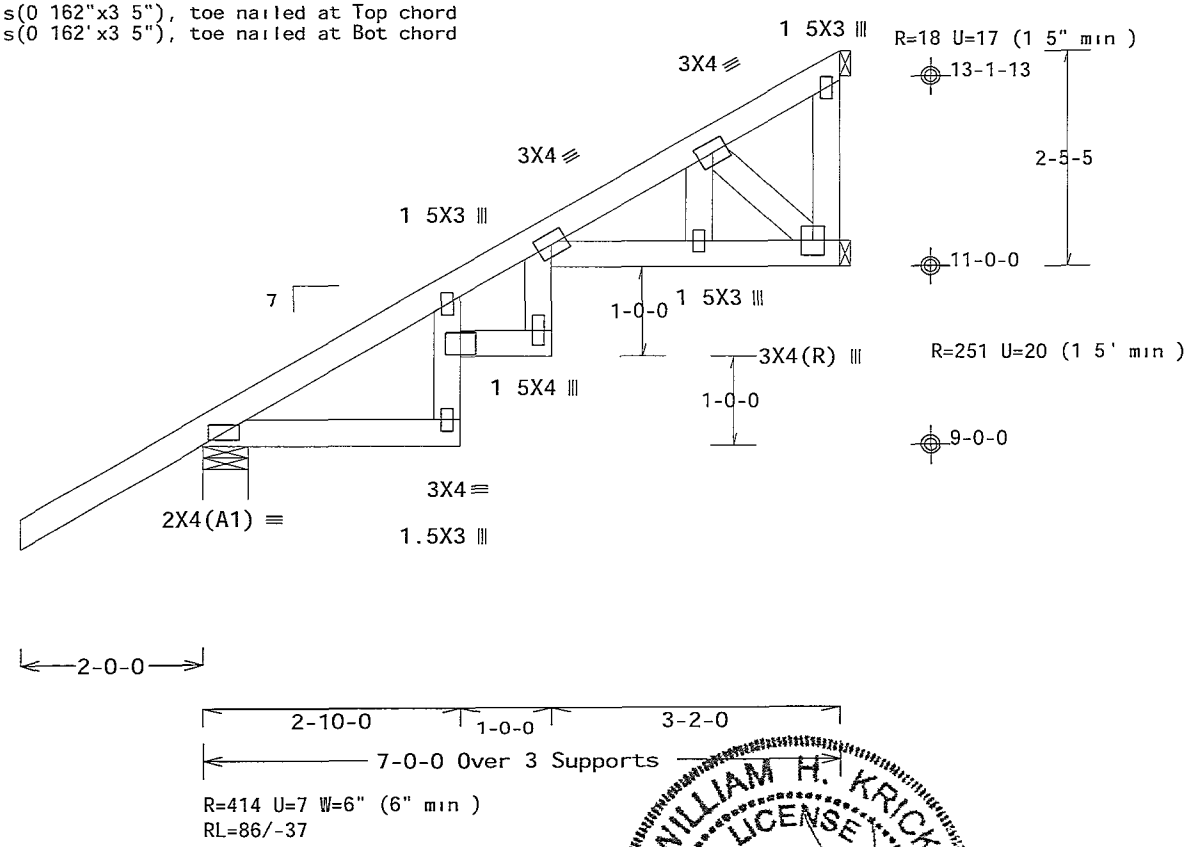

R=414 U=7 W=6" (6" min)
RL=86/-37

Design Crit. FBC2010Res/TPI-2007(STD)
FT/RT=10%(0%)/0(0)

PLT TYP Wave

12.03.04.0826.14 QTY=3 FL/-/3/-/-/R/- Scale =.5"/Ft.

WILLIAM H. KRICK LICENSE No. 70861 STATE OF FLORIDA PROFESSIONAL ENGINEER
04/19/2013

ALPINE
ITW Building Components Group Inc.
Haines City FL 33844
FL COA #0 278

WARNING READ AND FOLLOW ALL NOTES ON THIS SHEET!
IMPORTANT FURNISH THIS DESIGN TO ALL CONTRACTORS INCLUDING INSTALLERS

Trusses require extreme care in fabr cating handl ing shipp ng nstall ng and bracing Refer to and follow the latest edition of BCSI (Bu ld ng Component Safety Information by TPI and WTCA) for safety pract ces prior to performing these funct ons Installers shall provide temporary bracing per BCSI Unless noted otherwise top chord shall have properly attached structural sheathing and bottom chord shall have a properly attached rigid ceil ng Locat ons shown for permanent lateral restraint of webs shall have brac ng installed per BCSI sections B3 B7 or B10 as applicable

ITW Building Components Group Inc (ITWBCG) shall not be responsible for any deviat on from th s drawing any fa lure to bu ld the truss in conformance w th ANSI/TPI 1 or for handl ng shipp ng nstallat on bracing of trusses Apply plates to each face of truss and pos t on as shown above and on the Joint Details unless noted otherw se Refer to draw ngs 160A-Z for standard plate pos tions A seal on this drawing or cover page listing this draw ng nd cates acceptance of profess onal engineering respons b l ty solely for the design shown The su tab lity and use of this des gn for any structure is the respons bility of the Bu lding Dos gner per ANSI/TPI 1 Sec 2 For more nformation see This job s general notes page ITW BCG www twbcg com TPI www tpinst org WTCA www sbc ndustry com ICC www iccsafe org

TC LL	20.0 PSF	REF	R487-- 40077
TC DL	7.0 PSF	DATE	04/19/13
BC DL	10.0 PSF	DRW	HCUSR487 13109062
BC LL	0.0 PSF	HC-ENG	WHK/WHK
TOT LD.	37 0 PSF	SEQN-	10785
DUR FAC.	1 25		
SPACING	24 0"	JREF-	1UV1487_Z05

(13-097--BRYAN ZECHER Mowry Residence -- SW Dusk Glen Rd Lake City, FL 32024 - EJ7T1 7' End Jack)

Top chord 2x4 SP_#1_12A
Bot chord 2x4 SP_#1_12A
Webs 2x4 SP_#1_12A W2 2x4 SP_#3__12A

Lumber grades designated with '12A" use design values approved 1/5/2012 by ALSC

Bottom chord checked for 10 00 psf non-concurrent live load

MWFRS loads based on trusses located at least 15 00 ft from roof edge

120 mph wind, 15 00 ft mean hgt, ASCE 7-10, CLOSED bldg, Located anywhere in roof, RISK CAT II, EXP B, wind TC DL=3 5 psf, wind BC DL=5 0 psf GCpi(+/-)=0 18

Wind loads and reactions based on MWFRS with additional C&C member design

Deflection meets L/240 live and L/180 total load Creep increase factor for dead load is 1 50

Provide (2) 16d common nails(0 162'x3 5"), toe nailed at Top chord
Provide (2) 16d common nails(0 162"x3 5"), toe nailed at Bot chord

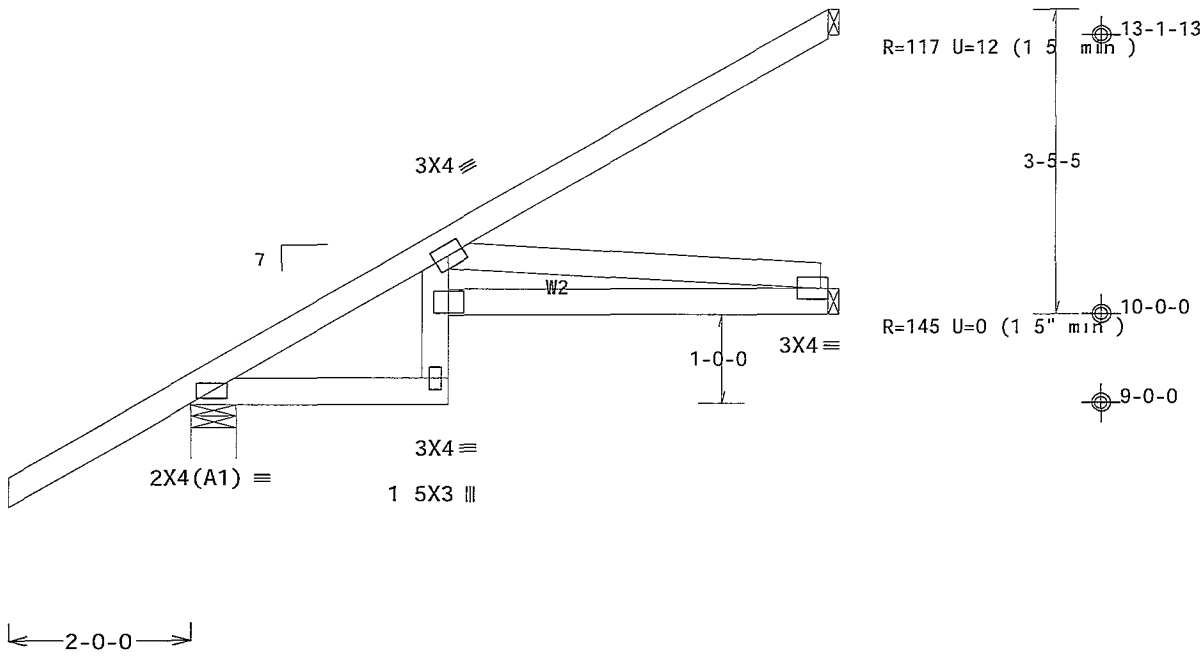

Design Crit: FBC2010Res/TPI-2007(STD)
FT/RT=10%(0%)/0(0) 11.03 04.0326.14 QTY 1

PLT TYP Wave

FL/-/3/-/-/R/- Scale =.5"/Ft.

WILLIAM H. KRICK LICENSE No. 70861 STATE OF FLORIDA PROFESSIONAL ENGINEER
04/19/2013

ALPINE
ITW Building Components Group Inc.
Hames City, FL 33844
FL COA #0 278

WARNING READ AND FOLLOW ALL NOTES ON THIS SHEET!
IMPORTANT FURNISH THIS DESIGN TO ALL CONTRACTORS INCLUDING INSTALLERS

Trusses requ re extreme care n fabricating handling shipping installing and brac ng Refer to and follow the latest edit on of BCSI (Building Component Safety Informat on by TPI and WTCA) for safety practices pr or to performing these functions Installers shall prov de temporary bracing per BCSI Unless noted otherw se top chord shall have properly attached structural sheathing and bottom chord shall have a properly attached r g d ceiling Locations shown for permanent lateral restra nt only shall have bracing installed per BCSI sect ons B3 B7 or B10 as applicable

ITW Bu ld ng Components Group Inc (ITWBCG) shall not be respons ble for any dev ation from th s design any failure to build the truss n conformance with ANSI/TPI 1 or for handling sh pp ng installation brac ng of trusses Apply plates to each face of truss and position as shown above and on the Jo nt Deta ls unless noted otherwise Refer to drawings 160A-Z for standard plate posit ons A seal on th s draw ng or cover page l sting th s drawing indicates acceptance of professional eng neer ng responsibil ty solely for the des gn shown The suitabil ty and use of th s design for any structure s the respons b l ty of the Build ng Designer per ANSI/TPI 1 Sec 2 For more nformat on see Th s job s general notes page ITW-BCG www twbcg com TPI www tp nst org WTCA www sbc ndustry com ICC www ccsafe org

TC LL	20 0 PSF	REF	R487-- 40078
TC DL	7.0 PSF	DATE	04/19/13
BC DL	10.0 PSF	DRW	HCUSR487 13109028
BC LL	0.0 PSF	HC-ENG	WHK/WHK
TOT LD	37 0 PSF	SEQN-	10786
DUR FAC	1 25		
SPACING	24 0"	JREF-	1UVI487_Z05

THIS DWG PREPARED FROM COMPUTER INPUT (LOADS & DIMENSIONS) SUBMITTED BY TRUSS MFR

(13-097--BRYAN ZECHER Mowry Residence -- SW Dusk Glen Rd Lake City, FL 32024 - EJ7X 7' End Jack)

Top chord 2x4 SP_#1_12A
Bot chord 2x4 SP_#1_12A

Lumber grades designated with '12A" use design values approved 1/5/2012 by ALSC

Bottom chord checked for 10 00 psf non-concurrent live load

MWFRS loads based on trusses located at least 7 50 ft from roof edge

120 mph wind 15 00 ft mean hgt, ASCE 7-10, CLOSED bldg, not located within 9 00 ft from roof edge, RISK CAT II, EXP B, wind TC DL=3 5 psf, wind BC DL=5 0 psf GCpi(+/-)=0 18

Wind loads and reactions based on MWFRS with additional C&C member design

Deflection meets L/240 live and L/180 total load Creep increase factor for dead load is 1 50

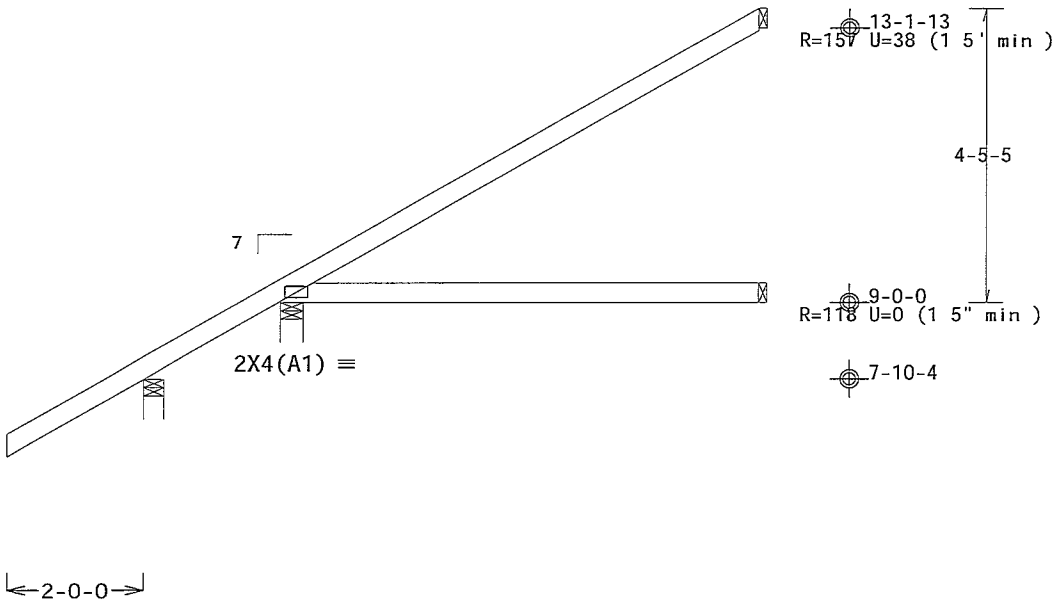

7-0-0
9-0-0 Over 4 Supports

R=226 U=36 W=3 5' (3 5" min)
RL=110/-46 R=436 U=39 W=4' (4" min)

Design Crit FBC2010Res/TPI-2007(STD)
FT/RT=10%(0%)/0(0)

12 03 04 0326 14 QTY:4 FL/-/3/-/-/R/-

Scale = 375"/Ft

PLT TYP. Wave

WILLIAM H. KRICK LICENSE No. 70861 STATE OF FLORIDA PROFESSIONAL ENGINEER
04/19/2013

ALPINE
ITW Building Components Group Inc.
Haines City, FL 33844
FL COA #0 278

WARNING READ AND FOLLOW ALL NOTES ON THIS SHEET!
IMPORTANT FURNISH THIS DESIGN TO ALL CONTRACTORS INCLUDING INSTALLERS

Trusses require extreme care in fabr cat ng handl ng sh pp ng nstalling and bracing Refer to and follow the latest edition of BCSI (Bu ld ng Component Safety Information by TPI and WTCA) for safety practices prior to performing these funct ons Installers shall prov de temporary brac ng per BCSI. Unless noted otherwise top chord shall have properly attached structural sheathing and bottom chord shall have a properly attached rigid ce l ng Locat ons shown for permanent lateral restraint of webs shall have bracing nstalled per BCSI sections B3 B7 or B10 as applicable

ITW Build ng Components Group Inc (ITWBCG) shall not be responsible for any deviat on from this design, any failure to build the truss n conformance with ANSI/TPI 1 or for handling shipp ng nstallation and bracing of trusses Apply plates to each face of truss and position as shown above and on the Jo nt Details unless noted otherwise Refer to drawings 160A-Z for standard plate posit ons A seal on th s draw ng or cover page l sting th s drawing indicates acceptance of profess onal eng neering responsibility solely for the des gn shown The suitabil ty and use of th s design for any structure s the responsib l ty of the Build ng Designer per ANSI/TPI 1 Sec 2 For more nformat on see Th s job s general notes page ITW-BCG www itwbcg com TPI www tpinst org WTCA www sbc ndustry com ICC www ccsafe org

TC LL	20 0 PSF	REF	R487-- 40079
TC DL	7.0 PSF	DATE	04/19/13
BC DL	10 0 PSF	DRW	HCUSR487 13109029
BC LL	0.0 PSF	HC-ENG	WHK/WHK
TOT.LD	37.0 PSF	SEQN-	10787
DUR.FAC.	1.25		
SPACING	24.0"	JREF-	1UVI487_Z05

THIS DWG PREPARED FROM COMPUTER INPUT (LOADS & DIMENSIONS) SUBMITTED BY TRUSS MFR

(13-097--BRYAN ZECHER Mowry Residence -- SW Dusk Glen Rd Lake City, FL 32024 - F 9 4 Common)

Top chord 2x4 SP_#1_12A
Bot chord 2x4 SP_#1_12A

Lumber grades designated with 12A' use design values approved 1/5/2012 by ALSC

Bottom chord checked for 10 00 psf non-concurrent live load

120 mph wind, 15 00 ft mean hgt, ASCE 7-10, CLOSED bldg, Located anywhere in roof, RISK CAT II, EXP B, wind TC DL=3 5 psf, wind BC DL=5 0 psf GCpi(+/-)=0 18

Wind loads and reactions based on MWFRS with additional C&C member design

Deflection meets L/240 live and L/180 total load Creep increase factor for dead load is 1 50

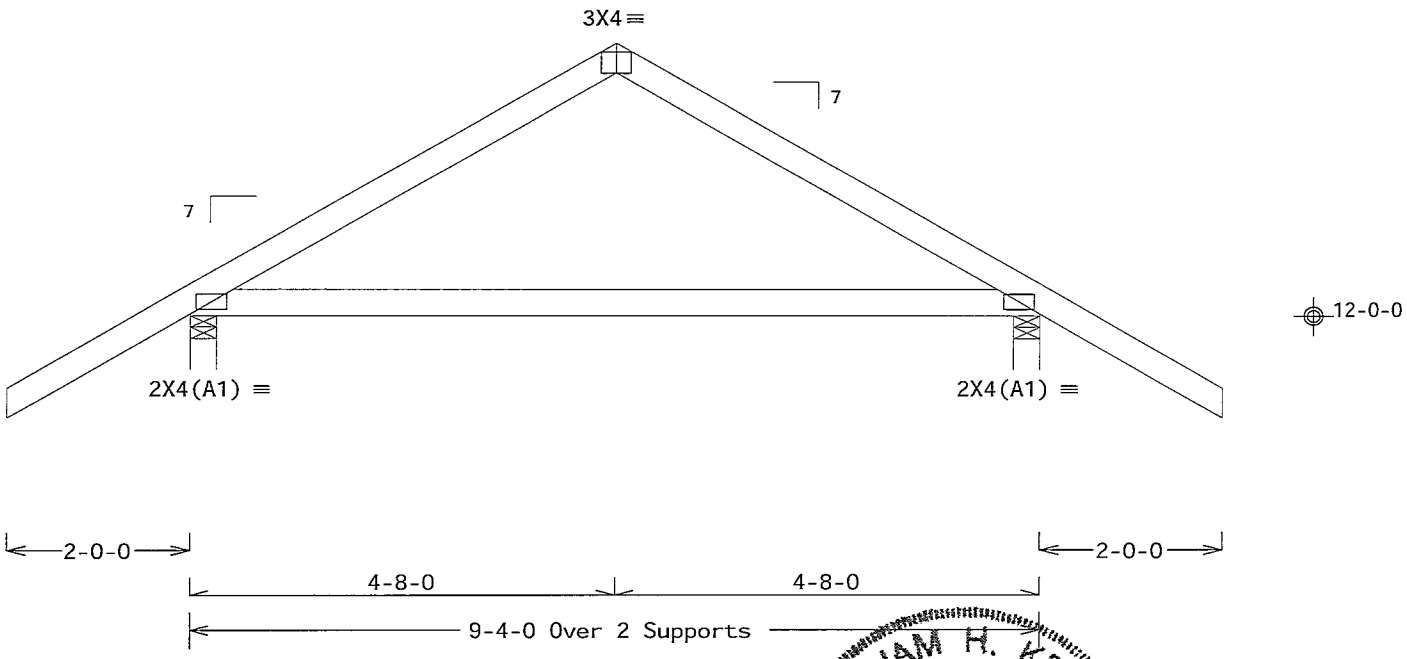

Design Crit· FBC2010Res/TPI-2007(STD)
FT/RT=10%(0%)/0(0) 12.03 04.0326.14 QTY 1 FL/-/3/-/-/R/-

PLT TYP Wave

Scale = 5"/Ft.

ALPINE
ITW Building Components Group Inc.
Haines City FL 33844
FL COA #0 278

WARNING READ AND FOLLOW ALL NOTES ON THIS SHEET!
IMPORTANT FURNISH THIS DESIGN TO ALL CONTRACTORS INCLUDING INSTALLERS

Trusses require extreme care in fabr cating handling sh pp ng install ng and brac ng Refer to and follow the latest edition of BCSI (Build ng Component Safety Informat on by TPI and WTCA) for safety pract ces prior to perform ng these functions Installers shall prov de temporary brac ng per BCSI Unless noted otherwise top chord shall have properly attached structural sheathing and bottom chord shall have a properly attached rig d ceiling Locations shown for permanent lateral restra nt shall have bracing installed per BCSI sections B3 B7 or B10 as applicable

ITW Build ng Components Group Inc (ITWBCG) shall not be responsible for any deviation from this drawing any failure to build the truss n conformance with ANSI/TPI 1 or for handling shipping installation bracing of trusses Apply plates to each face of truss and position as shown above and on the Jo nt Details unless noted otherwise Refer to drawings 160A-Z for standard plate posit ons A seal on th s drawing or cover page listing th s drawing ndicates acceptance of professional eng neer ng responsibility solely for the des gn shown The suitability and use of this design for any structure s the responsibil ty of the Build ng Designer per ANSI/TPI 1 Sec 2 For more nformation see This job s general notes page ITW BCG www twbcg com TPI www tp nst org WTCA www sbc ndustry com ICC www iccsafe org

WILLIAM H. KRICK
LICENSE
No. 70861
STATE OF FLORIDA
PROFESSIONAL ENGINEER
04/19/2013

TC LL	20.0 PSF	REF	R487-- 40080
TC DL	7.0 PSF	DATE	04/19/13
BC DL	10.0 PSF	DRW	HCUSR487 13109030
BC LL	0.0 PSF	HC-ENG	WHK/WHK
TOT LD.	37.0 PSF	SEQN-	10788
DUR.FAC.	1.25		
SPACING	24.0"	JREF-	1UV1487_Z05

(13-097--BRYAN ZECHER Mowry Residence -- SW Dusk Glen Rd Lake City, FL 32024 - F1 9 4" Common)

Top chord 2x4 SP_#1_12A
Bot chord 2x4 SP_#1_12A
Webs 2x4 SP_#3__12A

Lumber grades designated with '12A' use design values approved 1/5/2012 by ALSC

Left and right cantilevers are exposed to wind

Deflection meets L/240 live and L/180 total load Creep increase factor for dead load is 1 50

120 mph wind, 15 00 ft mean hgt, ASCE 7-10, CLOSED bldg, not located within 4 50 ft from roof edge, RISK CAT II, EXP B, wind TC DL=3 5 psf, wind BC DL=5 0 psf GCpi(+/-)=0 18

Wind loads and reactions based on MWFRS with additional C&C member design

Bottom chord checked for 10 00 psf non-concurrent live load

MWFRS loads based on trusses located at least 7 50 ft from roof edge

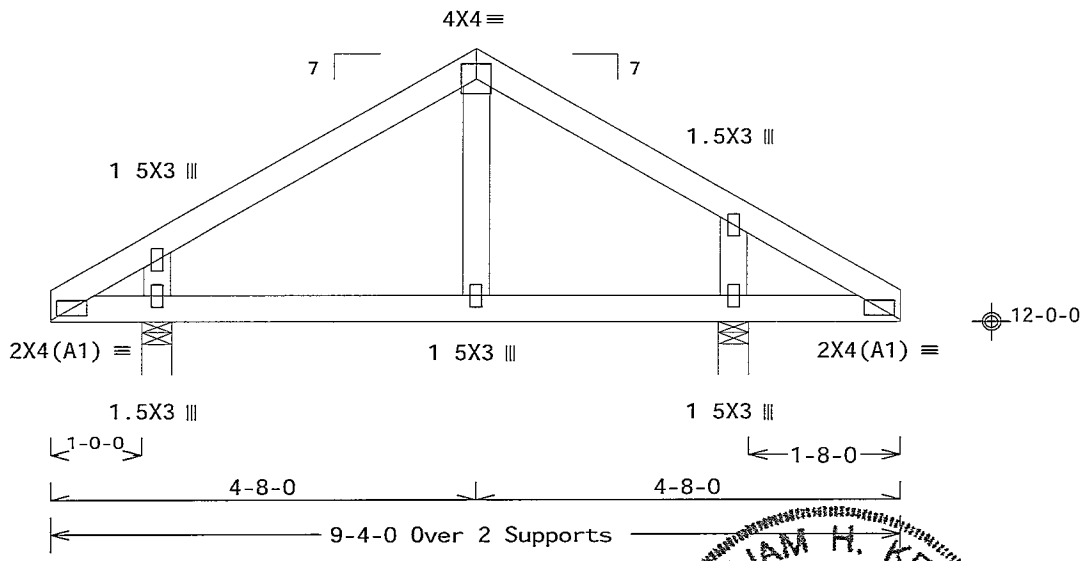

Design Crit: FBC2010Res/TPI-2007(STD)
FT/RT=10%(0%)/0(0)

WILLIAM H. KRICK LICENSE No. 70861 STATE OF FLORIDA PROFESSIONAL ENGINEER
04/19/2013

PLT TYP. Wave 12.03.04.0326.14 QTY 2 FL/-/3/-/-/R/- Scale =.5"/Ft.

ALPINE
ITW Building Components Group Inc.
Haines City, FL 33844
FL COA #0 278

WARNING READ AND FOLLOW ALL NOTES ON THIS SHEET!
IMPORTANT FURNISH THIS DESIGN TO ALL CONTRACTORS INCLUDING INSTALLERS

Trusses require extreme care in fabricating handl ng shipp ng installing and bracing Refer to and follow the latest edition of BCSI (Build ng Component Safety Information by TPI and WTCA) for recommended pract ces prior to performing these functions Installers shall provide temporary bracing per BCSI Unless noted otherwise top chord shall have properly attached structural sheath ng and bottom chord shall have a properly attached rigid ce l ng Locat ons shown for permanent lateral restraint of webs shall have bracing nstalled per BCSI sections B3 B7 or B10 as applicable

ITW Building Components Group Inc (ITWBCG) shall not be responsible for any deviation from this design, any failure to bu ld the truss n conformance with ANSI/TPI 1 or for handling shipp ng installation and bracing of trusses Apply plates to each face of truss and position as shown above and on the Joint Details unless noted otherw se Refer to draw ngs 160A-Z for standard plate pos t ons A seal on th s drawing or cover page l st ng th s drawing nd cates acceptance of profess onal eng neer ng responsibility solely for the des gn shown The suitabil ty and use of th s design for any structure s the respons b l ty of the Build ng Designer per ANSI/TPI 1 Sec 2 For more informat on see This job s general notes page ITW-BCG www twbcg com TPI www tpinst org WTCA www sbc ndustry com ICC www ccsafe org

TC LL	20.0 PSF	REF	R487-- 40081
TC DL	7.0 PSF	DATE	04/19/13
BC DL	10.0 PSF	DRW	HCUSR487 13109031
BC LL	0.0 PSF	HC-ENG	WHK/WHK
TOT.LD	37.0 PSF	SEQN-	10789
DUR.FAC.	1.25		
SPACING	24.0"	JREF-	1UV1487_Z05

THIS DWG PREPARED FROM COMPUTER INPUT (LOADS & DIMENSIONS) SUBMITTED BY TRUSS MFR

(13-097--BRYAN ZECHER Mowry Residence -- SW Dusk Glen Rd Lake City, FL 32024 - FDG 9'4" Gable)

Top chord 2x4 SP_#1_12A
Bot chord 2x4 SP_#1_12A
Webs 2x4 SP_#3__12A
Stack Chord SC1 2x4 SP_#1_12A Stack Chord SC2 2x4 SP_#1_12A

Lumber grades designated with "12A" use design values approved 1/5/2012 by ALSC

Stacked top chord must NOT be notched or cut in area (NNL) Dropped top chord braced at 24" o c intervals Attach stacked top chord (SC) to dropped top chord in notchable area using 3x4 tie-plates 24" o c Center plate on stacked/dropped chord interface, plate length perpendicular to chord length Splice top chord in notchable area using 3x6

120 mph wind, 15 00 ft mean hgt, ASCE 7-10, CLOSED bldg, Located anywhere in roof, RISK CAT II, EXP B, wind TC DL=3 5 psf, wind BC DL=5 0 psf GCpi(+/-)=0 18

Wind loads and reactions based on MWFRS with additional C&C member design

See DWGS A12015ENC100212, GBLLETIN0212, & GABRST100212 for more requirements

Bottom chord checked for 10 00 psf non-concurrent live load

Deflection meets L/240 live and L/180 total load Creep increase factor for dead load is 1 50

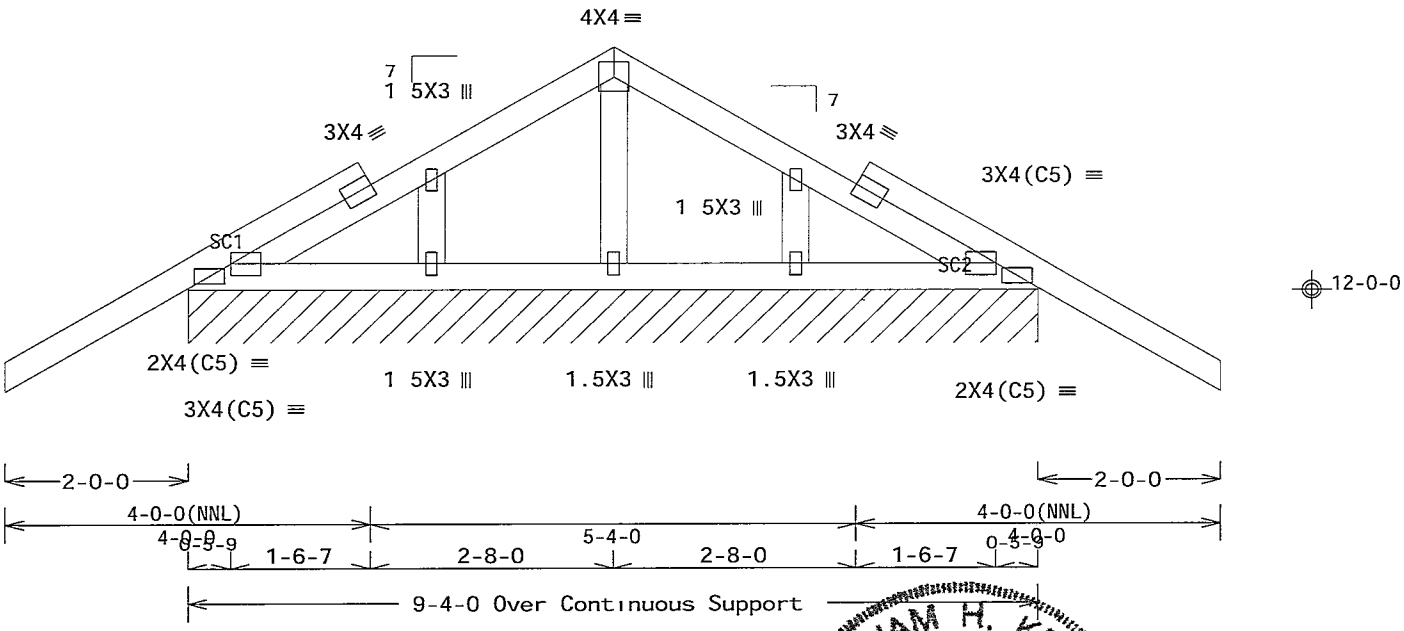

12-0-0

R=102 PLF U=5 PLF W=9-4-0
RL=8/-8 PLF

Design Crit· FBC2010Res/TPI-2007(STD)
FT/RT=10%(0%)/0(0) 12 03.04.0826 14 QTY 1 FL/-/3/-/-/R/-

PLT TYP. Wave

Scale =.5"/Ft.

WILLIAM H. KRICK LICENSE No. 70861 STATE OF FLORIDA PROFESSIONAL ENGINEER

04/19/2013

ALPINE
ITW Building Components Group Inc.
Haines City, FL 33844
FL COA #0 278

WARNING READ AND FOLLOW ALL NOTES ON THIS SHEET!
IMPORTANT FURNISH THIS DESIGN TO ALL CONTRACTORS INCLUDING INSTALLERS

Trusses requ re extreme care in fabricat ng handling shipping installing and bracing Refer to and follow the latest ed tion of BCSI (Building Component Safety Information by TPI and WTCA) for safety practices pr or to performing these funct ons Installers shall provide temporary bracing per BCSI Unless noted otherwise top chord shall have properly attached structural sheathing and bottom chord shall have a properly attached rigid ceil ng Locations shown for permanent lateral restraint shall have brac ng nstalled per BCSI sections B3 B7 or B10 as applicable

ITW Building Components Group Inc (ITWBCG) shall not be responsible for any deviat on from th s design any failure to bu ld the truss n conformance with ANSI/TPI 1 or for handling shipp ng installat on bracing of trusses Apply plates to each face of truss and position as shown above and on the Jo nt Details unless noted otherwise Refer to drawings 160A-Z for standard plate posit ons A seal on th s drawing or cover page list ng th s drawing nd cates acceptance of profess onal engineer ng responsibility solely for the des gn shown The suitabil ty and use of this des gn for any structure s the responsibil ty of the Build ng Designer per ANSI/TPI 1 Sec 2 For more nformat on see This job s general notes page ITW-BCG www twbcg com TPI www tp nst org WTCA www sbcindustry com ICC www iccsafe org

TC LL	20.0 PSF	REF	R487-- 40082
TC DL	7.0 PSF	DATE	04/19/13
BC DL	10 0 PSF	DRW	HCUSR487 13109032
BC LL	0.0 PSF	HC-ENG	WHK/WHK
TOT.LD.	37 0 PSF	SEQN-	10790
DUR FAC.	1.25		
SPACING	24.0"	JREF-	1UVI487_Z05

THIS DWG PREPARED FROM COMPUTER INPUT (LOADS & DIMENSIONS) SUBMITTED BY TRUSS MFR

(13-097--BRYAN ZECHER Mowry Residence -- SW Dusk Glen Rd Lake City, FL 32024 - G 3' Common)

Top chord 2x4 SP_#1_12A
Bot chord 2x4 SP_#1_12A

Lumber grades designated with "12A" use design values approved 1/5/2012 by ALSC

Bottom chord checked for 10 00 psf non-concurrent live load

120 mph wind, 15 55 ft mean hgt, ASCE 7-10, CLOSED bldg, Located anywhere in roof, RISK CAT II, EXP B, wind TC DL=3 5 psf, wind BC DL=5 0 psf GCpi(+/-)=0 18

Wind loads and reactions based on MWFRS with additional C&C member design

Deflection meets L/240 live and L/180 total load Creep increase factor for dead load is 1 50

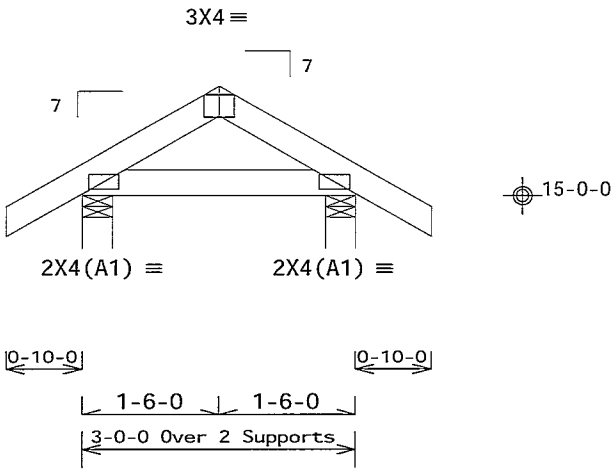

R=165 U=10 W=4" (4" min)
RL=27/-27 R=165 U=10 W=4" (4" min)

Design Crit. FBC2010Res/TPI-2007(STD)
FT/RT=10%(0%)/0(0) 12.03.04.0326 14 QTY=8 FL/-/3/-/-/R/- Scale =.5"/Ft.

PLT TYP. Wave

WILLIAM H. KRICK LICENSE No. 70861 STATE OF FLORIDA PROFESSIONAL ENGINEER

04/19/2013

ALPINE
ITW Building Components Group Inc.
Haines City, FL 33844
FL COA #0 278

WARNING READ AND FOLLOW ALL NOTES ON THIS SHEET!
IMPORTANT FURNISH THIS DESIGN TO ALL CONTRACTORS INCLUDING INSTALLERS

Trusses require extreme care n fabr cating handling shipping install ng and brac ng Refer to and follow the latest edit on of BCSI (Building Component Safety Informat on by TPI and WTCA) for safety pract ces prior to perform ng these functions Installers shall prov de temporary brac ng per BCSI Unless noted otherwise top chord shall have properly attached structural sheathing and bottom chord shall have a properly attached rig d ce l ng Locat ons shown for permanent lateral restra nt of web shall have bracing nstalled per BCSI sect ons B3 B7 or B10 as appl cable

ITW Bu ld ng Components Group Inc (ITWBCG) shall not be responsible for any deviation from th s design any failure to build the truss n conformance with ANSI/TPI 1 or for handling shipp ng installation brac ng of trusses Apply plates to each face of truss and position as shown above and on the Jo nt Deta ls unless noted otherwise Refer to drawings 160A-Z for standard plate posit ons A seal on th s drawing or cover page l st ng th s drawing ndicates acceptance of professional eng neer ng responsibility solely for the des gn shown The suitabil ty and use of th s design for any structure s the respons b l ty of the Build ng Des gner per ANSI/TPI 1 Sec 2 For more nformation see Th s job s general notes page ITW-BCG www twbcg com TPI www tp nst org WTCA www sbc ndustry com ICC www ccsafe org

TC LL	20.0 PSF	REF	R487-- 40083
TC DL	7.0 PSF	DATE	04/19/13
BC DL	10.0 PSF	DRW	HCUSR487 13109033
BC LL	0.0 PSF	HC-ENG	WHK/WHK
TOT LD.	37.0 PSF	SEQN-	10791
DUR FAC.	1.25		
SPACING	24 0"	JREF-	1UVI487_Z05

(13-097--BRYAN ZECHER Mowry Residence -- SW Dusk Glen Rd Lake City, FL 32024 - G1 4' Common)

Top chord 2x4 SP_#1_12A
Bot chord 2x4 SP_#1_12A

Lumber grades designated with '12A" use design values approved 1/5/2012 by ALSC

Bottom chord checked for 10 00 psf non-concurrent live load

120 mph wind, 15 65 ft mean hgt, ASCE 7-10, CLOSED bldg, Located anywhere in roof, RISK CAT II, EXP B, wind TC DL=3 5 psf, wind BC DL=5 0 psf GCpi(+/-)=0 18

Wind loads and reactions based on MWFRS with additional C&C member design

Deflection meets L/240 live and L/180 total load Creep increase factor for dead load is 1 50

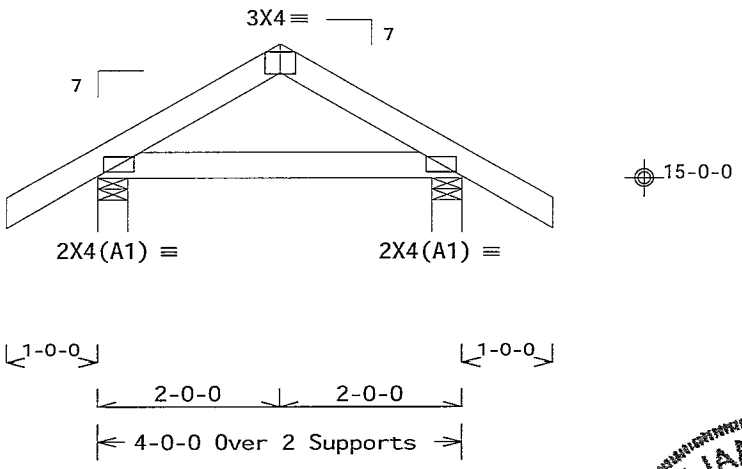

R=213 U=13 W=4 (4" min)
RL=35/-35 R=213 U=13 W=4" (4" min

Design Crit. FBC2010Res/TPI-2007(STD)
FT/RT=10%(0%)/0(0) 12 03.04.0326 14 10TY4 FL/-/3/-/-/R/-

PLT TYP. Wave

Scale =.5"/Ft.

WILLIAM H. KRICK LICENSE No. 70861 STATE OF FLORIDA PROFESSIONAL ENGINEER
04/19/2013

ALPINE
ITW Building Components Group Inc.
Hames City FL 33844
FL COA #0 278

WARNING READ AND FOLLOW ALL NOTES ON THIS SHEET!
IMPORTANT FURNISH THIS DESIGN TO ALL CONTRACTORS INCLUDING INSTALLERS

Trusses require extreme care in fabr cat ng handl ng sh pp ng nstall ng and bracing Refer to and follow the latest edition of BCSI (Bu ld ng Component Safety Information by TPI and WTCA) for recommended pract ces prior to performing these funct ons Installers shall provide temporary brac ng per BCSI. Unless noted otherwise top chord shall have properly attached structural sheath ng and bottom chord shall have a properly attached rig d ce l ng Locat ons shown for permanent lateral restra nt of webs shall have bracing nstalled per BCSI sect ons B3 B7 or B10 as appl cable

ITW Build ng Components Group Inc (ITWBCG) shall not be responsible for any deviat on from th s design, any failure to bu ld the truss n conformance w th ANSI/TPI 1 or for handl ng shipp ng nstallat on and bracing of trusses Apply plates to each face of truss and posit on as shown above and on the Jo nt Details unless noted otherwise Refer to drawings 160A-Z for standard plate posit ons A seal on th s draw ng or cover page l st ng th s drawing ndicates acceptance of profess onal eng neer ng responsibil ty solely for the des gn shown The suitabil ty and use of th s des gn for any structure s the respons b l ty of the Build ng Designer per ANSI/TPI 1 Sec 2 For more nformat on see This job s general notes page ITW-BCG www twbcg com TPI www tp nst org WTCA www sbc ndustry com ICC www ccsafe org

TC LL	20.0 PSF	REF	R487-- 40084
TC DL	7 0 PSF	DATE	04/19/13
BC DL	10 0 PSF	DRW	HCUSR487 13109034
BC LL	0 0 PSF	HC-ENG	WHK/WHK
TOT LD	37.0 PSF	SEQN-	10792
DUR FAC.	1 25		
SPACING	24 0"	JREF-	1UVI487_Z05

(13-097--BRYAN ZECHER Mowry Residence -- SW Dusk Glen Rd Lake City, FL 32024 - G1GE 4' Gable)

Top chord 2x4 SP_#1_12A
Bot chord 2x4 SP_#1_12A
Webs 2x4 SP_#3__12A

Lumber grades designated with '12A" use design values approved 1/5/2012 by ALSC

Gable end supports 8" max rake overhang

Bottom chord checked for 10 00 psf non-concurrent live load

120 mph wind, 15 65 ft mean hgt, ASCE 7-10, CLOSED bldg, Located anywhere in roof, RISK CAT II, EXP B, wind TC DL=3 5 psf, wind BC DL=5 0 psf GCpi(+/-)=0 18

Wind loads and reactions based on MWFRS with additional C&C member design

See DWGS A12030ENC100212, GBLLETIN0212, & GABRST100212 for more requirements

Deflection meets L/240 live and L/180 total load Creep increase factor for dead load is 1 50

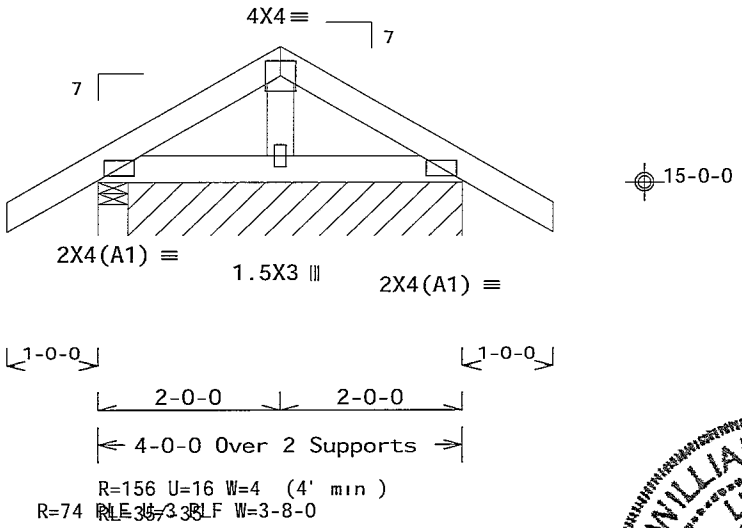

Design Crit FBC2010Res/TPI-2007(STD) 12.03 04.03.06 14 FT/RT=10%(0%)/0(0)

PLT TYP Wave

FL/-/3/-/-/R/- Scale =.5"/Ft.

ALPINE
ITW Building Components Group Inc.
Haines City FL 33844
FL COA #0 278

WARNING READ AND FOLLOW ALL NOTES ON THIS SHEET!
IMPORTANT FURNISH THIS DESIGN TO ALL CONTRACTORS INCLUDING INSTALLERS

Trusses requ re extreme care n fabricating handl ng sh pp ng install ng and brac ng Refer to and follow the latest ed t on of BCSI (Build ng Component Safety Informat on by TPI and WTCA) for handling pract ces prior to performing these functions Installers shall prov de temporary brac ng per BCSI. Unless noted otherw se top chord shall have properly attached structural sheath ng and bottom chord shall have a properly attached r g d ceiling Locat ons shown for permanent lateral restra nt of webs shall have bracing installed per BCSI sect ons B3 B7 or B10 as appl cable

ITW Bu ld ng Components Group Inc (ITWBCG) shall not be respons ble for any dev ation from this design any fa lure to build the truss in conformance w th ANSI/TPI 1 or for handling sh pp ng installation & brac ng of trusses Apply plates to each face of truss and pos t on as shown above and on the Joint Data ls unless noted otherwise Refer to drawings 160A-Z for standard plate pos t ons A seal on this draw ng or cover page listing this draw ng ind cates acceptance of professional engineering respons b l ty solely for the design shown The suitab lity and use of this design for any structure is the respons b lity of the Building Des gner per ANSI/TPI 1 Sec 2 For more informat on see Th s job s general notes page ITW BCG www itwbcg com TPI www tpinst org WTCA www sbcindustry com ICC www iccsafe org

WILLIAM H. KRICK
LICENSE
No. 70861
STATE OF FLORIDA
PROFESSIONAL ENGINEER
04/19/2013

TC LL	20 0 PSF	REF	R487-- 40085
TC DL	7 0 PSF	DATE	04/19/13
BC DL	10 0 PSF	DRW	HCUSR487 13109035
BC LL	0.0 PSF	HC-ENG	WHK/WHK
TOT LD	37 0 PSF	SEQN-	10793
DUR FAC.	1 25		
SPACING	24 0"	JREF-	1UV1487_Z05

(13-097--BRYAN ZECHER Mowry Residence -- SW Dusk Glen Rd Lake City, FL 32024 - GGE 3' Gable)

Top chord 2x4 SP_#1_12A
Bot chord 2x4 SP_#1_12A
Webs 2x4 SP_#3__12A

Lumber grades designated with '12A use design values approved 1/5/2012 by ALSC

Gable end supports 8" max rake overhang

Bottom chord checked for 10 00 psf non-concurrent live load

120 mph wind 15 55 ft mean hgt, ASCE 7-10, CLOSED bldg, Located anywhere in roof, RISK CAT II, EXP B, wind TC DL=3 5 psf, wind BC DL=5 0 psf GCpi(+/-)=0 18

Wind loads and reactions based on MWFRS with additional C&C member design

See DWGS A12030ENC100212, GBLLETIN0212, & GABRST100212 for more requirements

Deflection meets L/240 live and L/180 total load Creep increase factor for dead load is 1 50

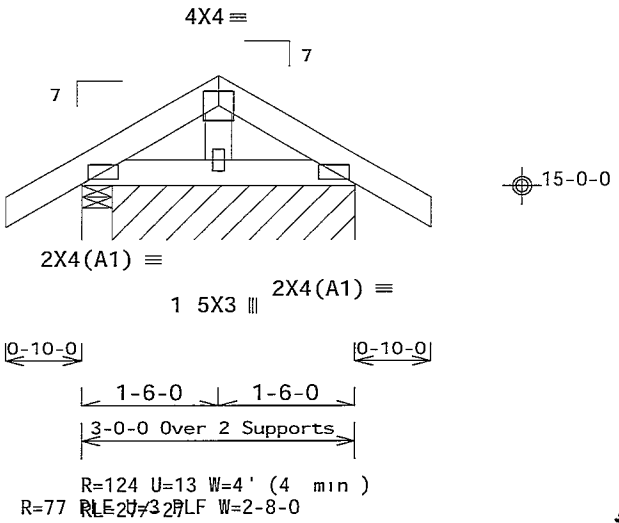

Design Crit FBC2010Res/TPI-2007(STD)
FT/RT=10%(0%)/0(0) 12 03 04 0326 14 QTY 2 FL/-/3/-/-/R/-

PLT TYP. Wave

Scale =.5"/Ft.

ALPINE
ITW Building Components Group Inc.
Haines City FL 33844
FL COA #0 278

WARNING READ AND FOLLOW ALL NOTES ON THIS SHEET!
IMPORTANT FURNISH THIS DESIGN TO ALL CONTRACTORS INCLUDING INSTALLERS

Trusses requ re extreme care n fabricat ng handl ng shipping installing and bracing Refer to and follow the latest ed tion of BCSI (Build ng Component Safety Information by TPI and WTCA) for safety practices pr or to performing those funct ons Installers shall provide temporary bracing per BCSI Unless noted otherw se top chord shall have properly attached structural sheath ng and bottom chord shall have a properly attached r g d ceiling Locations shown for permanent lateral restraint of webs shall have brac ng installed per BCSI sections B3 B7 or B10 as applicable

ITW Bu ld ng Components Group Inc (ITWBCG) shall not be respons ble for any dev at on from th s design or any fa lure to bu ld the truss in conformance with ANSI/TPI 1 or for handl ng sh pping nstallation & bracing of trusses Apply plates to each face of truss and pos t on as shown above and on the Joint Deta ls unless noted otherw se Refer to draw ngs 160A-Z for standard plate pos tions A seal on this draw ng or cover page list ng this draw ng indicates acceptance of professional engineering respons b lity solely for the design shown The su tab lity and use of this des gn for any structure is the responsib lity of the Bu ld ng Des gner per ANSI/TPI 1 Sec 2 For more information see Th s job s general notes page ITW BCG www twbcg com TPI www tpinst org WTCA www sbcindustry com ICC www iccsafe org

WILLIAM H. KRICK
LICENSE
No. 70861
STATE OF FLORIDA
PROFESSIONAL ENGINEER
04/19/2013

TC LL	20 0 PSF	REF	R487-- 40086
TC DL	7 0 PSF	DATE	04/19/13
BC DL	10 0 PSF	DRW	HCUSR487 13109036
BC LL	0.0 PSF	HC-ENG	WHK/WHK
TOT.LD.	37.0 PSF	SEQN-	10794
DUR FAC	1 25		
SPACING	24.0"	JREF-	1UVI487_Z05

THIS DWG PREPARED FROM COMPUTER INPUT (LOADS & DIMENSIONS) SUBMITTED BY TRUSS MFR

(13-097--BRYAN ZECHER Mowry Residence -- SW Dusk Glen Rd Lake City, FL 32024 - H11A 28 Stepdown Hip)

Top chord 2x4 SP_#1_12A
Bot chord 2x4 SP_#1_12A
Webs 2x4 SP_#3__12A

Lumber grades designated with "12A' use design values approved 1/5/2012 by ALSC

In lieu of structural panels use purlins to brace all flat TC @ 24" OC

MWFRS loads based on trusses located at least 7 50 ft from roof edge

120 mph wind, 15 00 ft mean hgt, ASCE 7-10, CLOSED bldg, not located within 9 00 ft from roof edge, RISK CAT II, EXP B, wind TC DL=3 5 psf, wind BC DL=5 0 psf GCpi(+/-)=0 18

Wind loads and reactions based on MWFRS with additional C&C member design

Bottom chord checked for 10 00 psf non-concurrent live load

Deflection meets L/240 live and L/180 total load Creep increase factor for dead load is 1 50

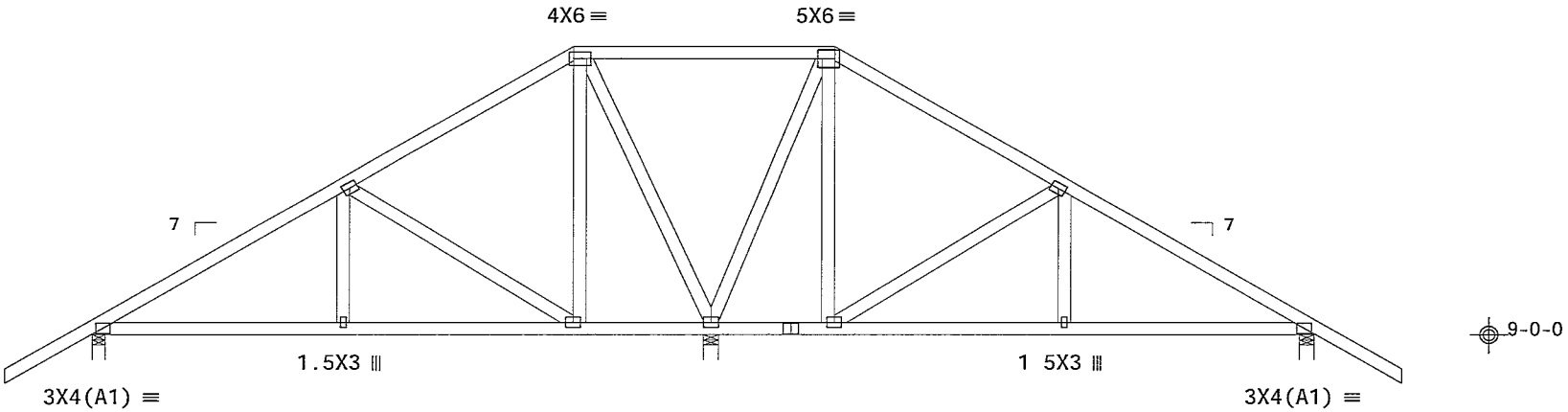

R=581 U=34 W=3 5" (3 5" min)
RL=129/-129

R=1300 U=34 W=4" (4" min)

R=567 U=34 W=4" (4" min)

Note· All Plates Are 3X4 Except As Shown

Design Crit. FBC2010Res/TPI-2007(STD)

PLT TYP Wave

FT/RT=10%(0%)/0(0) 12 03 04 0826.14 QTY:1 FL/-/3/-/-/R/- Scale =.25"/Ft.

WILLIAM H. KRICK LICENSE No. 70861 STATE OF FLORIDA PROFESSIONAL ENGINEER 04/19/2013

ALPINE
ITW Building Components Group Inc.
Haines City, FL 33844
FL COA #0 278

WARNING READ AND FOLLOW ALL NOTES ON THIS SHEET!
IMPORTANT FURNISH THIS DESIGN TO ALL CONTRACTORS INCLUDING INSTALLERS

Trusses requ re extreme care in fabr cat ng handl ng shipping nstalling and bracing refer to and follow the latest ed t on of BCSI (Build ng Component Safety Information by TPI and WTCA) for safety practices prior to performing these funct ons Installers shall provide temporary bracing per BCSI Unless noted otherw se top chord shall have properly attached structural sheath ng and bottom chord shall have a properly attached rigid ceiling Locat ons shown for permanent lateral restraint shall have brac ng nstalled per BCSI sections B3 B7 or B10 as applicable

ITW Building Components Group Inc (ITWBCG) shall not be responsible for any deviat on from th s drawing any fa lure to bu ld the truss n conformance w th ANSI/TPI 1 or for handling shipp ng nstallat on bracing of trusses Apply plates to each face of truss and pos tion as shown above and on the Jo nt Details unless noted otherw se Refer to draw ngs 160A-Z for standard plate positions A seal on this drawing or cover page list ng this draw ng ind cates acceptance of professional engineering respons bility solely for the design shown The su tab lity and use of this des gn for any structure is the responsibility of the Bu lding Des gner per ANSI/TPI 1 Sec 2 For more information see This job s general notes page ITW-BCG www twbcg com TPI www tp nst org WTCA www sbc ndustry com ICC www iccsafe org

TC LL	20.0 PSF	REF	R487-- 40087
TC DL	7 0 PSF	DATE	04/19/13
BC DL	10.0 PSF	DRW	HCUSR487 13109037
BC LL	0.0 PSF	HC-ENG	WHK/WHK
TOT LD	37.0 PSF	SEQN-	10795
DUR.FAC.	1.25		
SPACING	24.0"	JREF-	1UVI487_Z05

(13-097--BRYAN ZECHER Mowry Residence -- SW Dusk Glen Rd Lake City, FL 32024 - H11B 24' Stepdown Hip)

Top chord 2x4 SP_#1_12A
Bot chord 2x4 SP_#1_12A
Webs 2x4 SP_#3__12A

Lumber grades designated with '12A' use design values approved 1/5/2012 by ALSC

In lieu of structural panels use purlins to brace all flat TC @ 24" OC

MWFRS loads based on trusses located at least 7 50 ft from roof edge

120 mph wind, 15 00 ft mean hgt, ASCE 7-10, CLOSED bldg, not located within 9 00 ft from roof edge, RISK CAT II, EXP B, wind TC DL=3 5 psf, wind BC DL=5 0 psf GCpi(+/-)=0 18

Wind loads and reactions based on MWFRS with additional C&C member design

Bottom chord checked for 10 00 psf non-concurrent live load

Deflection meets L/240 live and L/180 total load Creep increase factor for dead load is 1 50

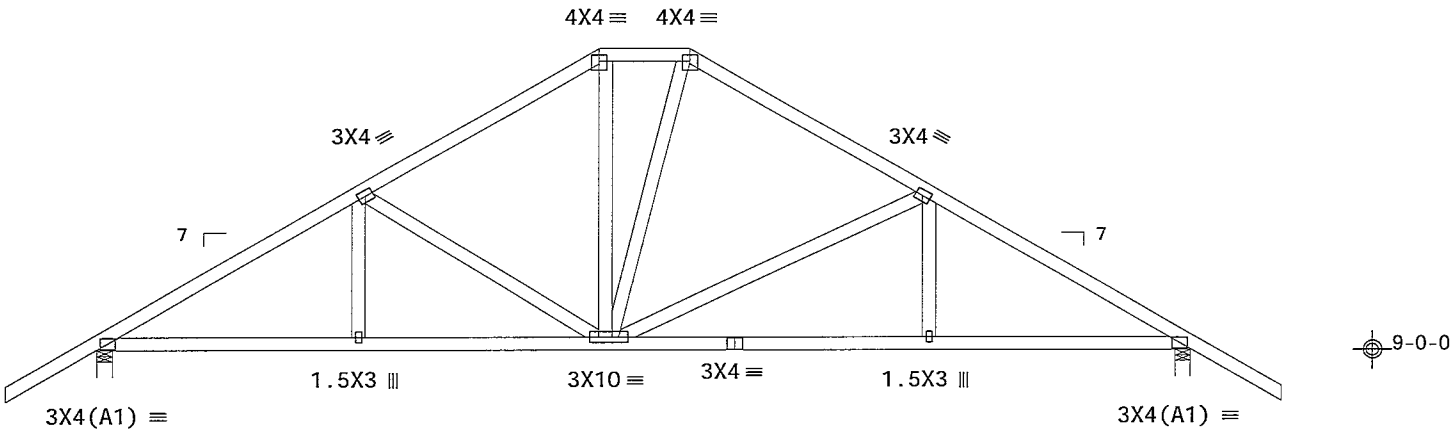

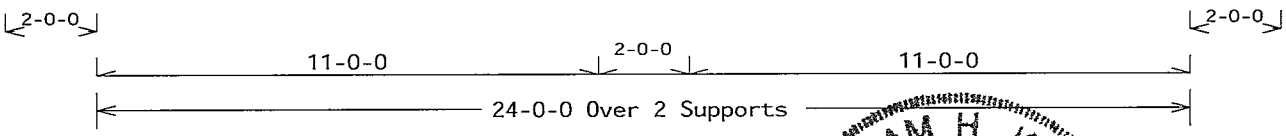

R=1036 U=44 W=4' (4' min)
RL=129/-129

R=1036 U=44 W=4' (4" min)

Design Crit: FBC2010Res/TPI-2007(STD)
FT/RT=10%(0%)/0(0) T2.03.04.0326 14 QTY 2 FL/-/3/-/-/R/- Scale =.25"/Ft.

PLT TYP. Wave

WILLIAM H. KRICK LICENSE No. 70861 STATE OF FLORIDA PROFESSIONAL ENGINEER
04/19/2013

ALPINE
ITW Building Components Group Inc.
Haines City FL 33844
FL COA #0 278

WARNING READ AND FOLLOW ALL NOTES ON THIS SHEET!
IMPORTANT FURNISH THIS DESIGN TO ALL CONTRACTORS INCLUDING INSTALLERS

Trusses require extreme care in fabricat ng handling shipping nstalling and bracing Refer to and follow the latest ed t on of BCSI (Building Component Safety Information by TPI and WTCA) for safety practices pr or to performing these funct ons Installers shall provide temporary bracing per BCSI Unless noted otherw se top chord shall have properly attached structural sheathing and bottom chord shall have a properly attached r gid ceiling Locations shown for permanent lateral restraint of webs shall have bracing installed per BCSI sections B3 B7 or B10 as applicable

ITW Building Components Group Inc (ITWBCG) shall not be responsible for any deviat on from this design any fa lure to bu ld the truss n conformance with ANSI/TPI 1 or for handling shipp ng nstallation & bracing of trusses Apply plates to each face of truss and position as shown above and on the Joint Details unless noted otherwise Refer to drawings 160A-Z for standard plate posit ons A seal on th s drawing or cover page l sting th s drawing ndicates acceptance of professional eng neer ng responsibility solely for the des gn shown The suitabil ty and use of this design for any structure is the responsibility of the Build ng Designer per ANSI/TPI 1 Sec 2 For more nformation see This job s general notes page ITW-BCG www itwbcg com TPI www tpinst org WTCA www sbcindustry com ICC www ccsafe org

TC LL	20.0 PSF	REF	R487-- 40088
TC DL	7.0 PSF	DATE	04/19/13
BC DL	10.0 PSF	DRW	HCUSR487 13109038
BC LL	0.0 PSF	HC-ENG	WHK/WHK
TOT.LD.	37.0 PSF	SEQN-	10796
DUR FAC.	1.25		
SPACING	24.0"	JREF-	1UVI487_Z05

THIS DWG PREPARED FROM COMPUTER INPUT (LOADS & DIMENSIONS) SUBMITTED BY TRUSS MFR

(13-097--BRYAN ZECHER Mowry Residence -- SW Dusk Glen Rd Lake City, FL 32024 - H11C 42'8'5 Mono Hip)

Top chord 2x4 SP_#1_12A
Bot chord 2x4 SP_#1_12A
Webs 2x4 SP_#3__12A

Lumber grades designated with "12A" use design values approved 1/5/2012 by ALSC

Left end vertical not exposed to wind pressure

(a) Continuous lateral bracing equally spaced on member

Bottom chord checked for 10 00 psf non-concurrent live load

MWFRS loads based on trusses located at least 7 50 ft from roof edge

120 mph wind, 15 00 ft mean hgt, ASCE 7-10, CLOSED bldg, not located within 13 00 ft from roof edge, RISK CAT II, EXP B, wind TC DL=3 5 psf, wind BC DL=5 0 psf GCpi(+/-)=0 18

Wind loads and reactions based on MWFRS with additional C&C member design

Max JT VERT DEFL LL 0 18" DL 0 24" recommended camber 3/8"

In lieu of structural panels use purlins to brace all flat TC @ 24" OC

Deflection meets L/240 live and L/180 total load Creep increase factor for dead load is 1 50

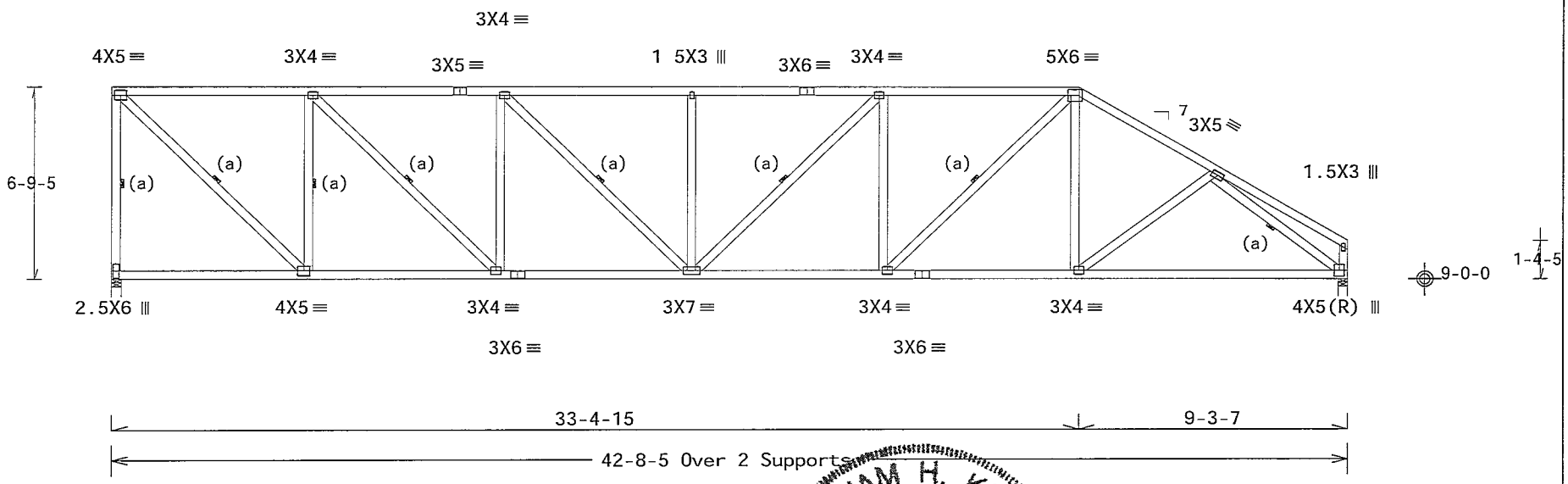

R=1627 U=80 W=4' (4" min)
RL=26/-89

R=1627 U=55 W=4" (4" min)

Design Crit· FBC2010Res/TPI-2007(STD)
FT/RT=10%(0%)/0(0) 12.03.04.0326.14 QTY:1 FL/-/3/-/-/R/-

PLT TYP. Wave

Scale =.1875"/Ft.

WILLIAM H. KRICK LICENSE No. 70861 STATE OF FLORIDA PROFESSIONAL ENGINEER 04/19/2013

ALPINE
ITW Building Components Group Inc.
Haines City, FL 33844
FL COA #0 278

WARNING READ AND FOLLOW ALL NOTES ON THIS SHEET!
IMPORTANT FURNISH THIS DESIGN TO ALL CONTRACTORS INCLUDING INSTALLERS

Trusses require extreme care n fabricating handling sh pping installing and brac ng Refer to and follow the latest edit on of BCSI (Building Component Safety Informat on by TPI and WTCA) for safety pract ces prior to perform ng these functions Installers shall prov de temporary brac ng per BCSI. Unless noted otherwise top chord shall have properly attached structural sheathing and bottom chord shall have a properly attached rig d ce ling Locat ons shown for permanent lateral restraint shall have bracing nstalled per BCSI sect ons B3 B7 or B10 as appl cable

ITW Build ng Components Group Inc (ITWBCG) shall not be responsible for any deviation from this design any failure to build the truss n conformance with ANSI/TPI 1 or for handling shipping installation bracing of trusses Apply plates to each face of truss and position as shown above and on the Joint Details unless noted otherwise Refer to drawings 160A-Z for standard plate positions A seal on this drawing or cover page listing this drawing indicates acceptance of professional eng neer ng responsibil ty solely for the des gn shown The suitabil ty and use of this design for any structure s the respons b l ty of the Build ng Designer per ANSI/TPI 1 Sec 2 For more informat on see Th s job s general notes page ITW-BCG www itwbcg com TPI www tp nst org WTCA www sbcindustry com ICC www ccsafe org

TC LL	20 0 PSF	REF	R487-- 40089
TC DL	7 0 PSF	DATE	04/19/13
BC DL	10.0 PSF	DRW	HCUSR487 13109039
BC LL	0.0 PSF	HC-ENG	WHK/WHK
TOT.LD.	37.0 PSF	SEQN-	10797
DUR FAC	1.25		
SPACING	24 0"	JREF-	1UVI487_Z05

(13-097--BRYAN ZECHER Mowry Residence -- SW Dusk Glen Rd Lake City, FL 32024 - H11CS 40' Stepdown Hip)

Top chord 2x4 SP_#1_12A
Bot chord 2x4 SP_#1_12A
Webs 2x4 SP_#3__12A

Lumber grades designated with '12A" use design values approved 1/5/2012 by ALSC

(a) 1x4 #3SRB SPF-S or better "T" brace 80% length of web member Attach with 8d Box or Gun (0 113"x2 5",min)nails @ 6" OC

In lieu of structural panels use purlins to brace all flat TC @ 24" OC

MWFRS loads based on trusses located at least 7 50 ft from roof edge

(**) 1 plate(s) require special positioning Refer to scaled plate plot details for special positioning requirements

120 mph wind, 15 00 ft mean hgt, ASCE 7-10, CLOSED bldg, not located within 6 50 ft from roof edge, RISK CAT II, EXP B, wind TC DL=3 5 psf, wind BC DL=5 0 psf GCpi(+/-)=0 18

Wind loads and reactions based on MWFRS with additional C&C member design

Bottom chord checked for 10 00 psf non-concurrent live load.

Deflection meets L/240 live and L/180 total load Creep increase factor for dead load is 1 50

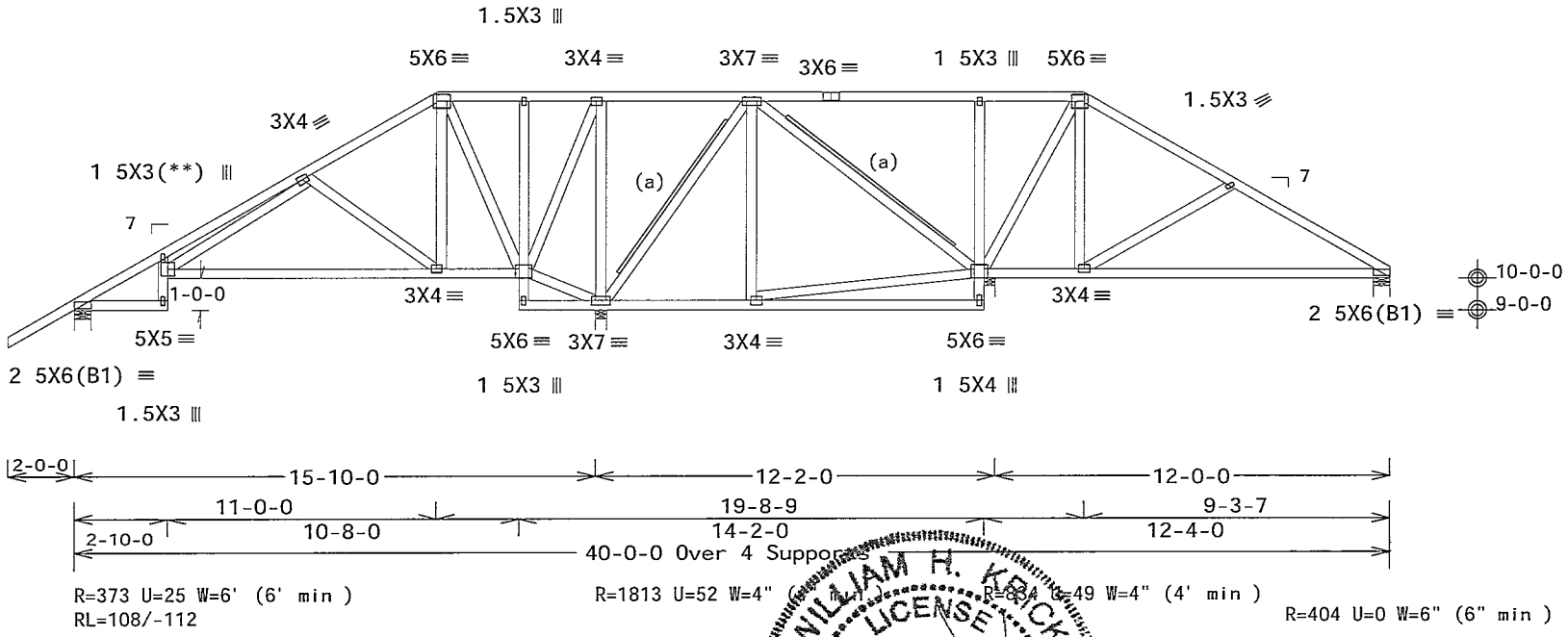

Design Crit. FBC2010Res/TPI-2007(STD)

PLT TYP Wave FT/RT=10%(0%)/0(0) 12.03.04 0326 14 QTY 1 FL/-/3/-/-/R/- Scale =.1875"/Ft

WILLIAM H. KEBICK LICENSE No. 70861 STATE OF FLORIDA PROFESSIONAL ENGINEER 04/19/2013

ALPINE
ITW Building Components Group Inc.
Haines City, FL 33844
FL COA #0 278

WARNING READ AND FOLLOW ALL NOTES ON THIS SHEET!
IMPORTANT FURNISH THIS DESIGN TO ALL CONTRACTORS INCLUDING INSTALLERS

Trusses requ re extreme care n fabricating handling shipping installing and bracing Refer to and follow the latest edit on of BCSI (Building Component Safety Information by TPI and WTCA) for safety practices pr or to performing these functions Installers shall provide temporary brac ng per BCSI Unless noted otherw se top chord shall have properly attached structural sheathing and bottom chord shall have a properly attached r g d ceiling Locations shown for permanent lateral restraint shall have bracing installed per BCSI sections B3 B7 or B10 as applicable

ITW Bu lding Components Group Inc (ITWBCG) shall not be respons ble for any dev ation from this design any failure to build the truss in conformance with ANSI/TPI 1 or for handling sh pping installation brac ng of trusses Apply plates to each face of truss and position as shown above and on the Joint Deta ls unless noted otherwise Refer to drawings 160A-Z for standard plate positions A seal on this draw ng or cover page listing this draw ng indicates acceptance of professional engineering respons b l ty solely for the design shown The suitab lity and use of this design for any structure s the responsib lity of the Building Designer per ANSI/TPI 1 Sec 2 For more informat on see Th s job s general notes page ITW-BCG www itwbcg com TPI www tp nst org WTCA www sbcindustry com ICC www ccsafe org

TC LL	20.0 PSF	REF	R487-- 40090
TC DL	7.0 PSF	DATE	04/19/13
BC DL	10.0 PSF	DRW	HCUSR487 13109040
BC LL	0.0 PSF	HC-ENG	WHK/WHK
TOT.LD.	37.0 PSF	SEQN-	10798
DUR.FAC	1.25		
SPACING	24 0"	JREF-	1UV1487_Z05

(13-097--BRYAN ZECHER Mowry Residence -- SW Dusk Glen Rd Lake City, FL 32024 - H13C 42'8"5 Mono Hip)

Top chord 2x4 SP_#1_12A
Bot chord 2x4 SP_#1_12A
Webs 2x4 SP_#3__12A

Lumber grades designated with "12A" use design values approved 1/5/2012 by ALSC

Left end vertical not exposed to wind pressure

In lieu of structural panels use purlins to brace all flat TC @ 24" OC

MWFRS loads based on trusses located at least 15 00 ft from roof edge

120 mph wind, 15 00 ft mean hgt, ASCE 7-10, CLOSED bldg, not located within 13 00 ft from roof edge, RISK CAT II, EXP B, wind TC DL=3 5 psf, wind BC DL=5 0 psf GCpi(+/-)=0 18

Wind loads and reactions based on MWFRS with additional C&C member design

(a) Continuous lateral bracing equally spaced on member

Bottom chord checked for 10 00 psf non-concurrent live load

Deflection meets L/240 live and L/180 total load Creep increase factor for dead load is 1 50

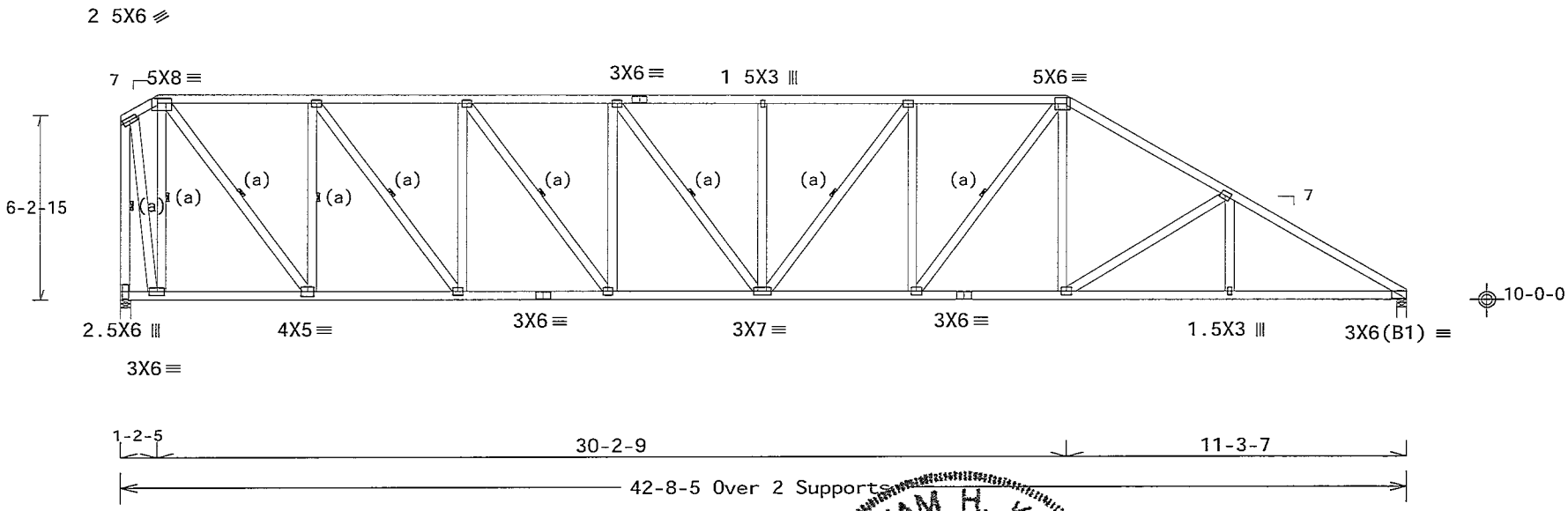

Note. All Plates Are 3X4 Except As Shown.

Design Crit: FBC2010Res/TPI-2007(STD)

PLT TYP. Wave FT/RT=10%(0%)/0(0) 12.03.04.0326.14 OT:1 FL/-/3/-/-/R/- Scale =.1875"/Ft.

WILLIAM H. KRICK LICENSE No. 70861 STATE OF FLORIDA PROFESSIONAL ENGINEER 04/19/2013

ALPINE
ITW Building Components Group Inc.
Haines City, FL 33844
FL COA #0 278

WARNING READ AND FOLLOW ALL NOTES ON THIS SHEET!
IMPORTANT FURNISH THIS DESIGN TO ALL CONTRACTORS INCLUDING INSTALLERS

Trusses requ re extreme care n fabricating handling shipping installing and brac ng Refer to and follow the latest edition of BCSI (Building Component Safety Information by TPI and WTCA) for safety practices pr or to performing these functions Installers shall provide temporary bracing per BCSI. Unless noted otherw se top chord shall have properly attached structural sheathing and bottom chord shall have a properly attached r gid ceiling Locations shown for permanent lateral restraint of webs shall have brac ng installed per BCSI sections B3 B7 or B10 as applicable

ITW Bu ding Components Group Inc (ITWBCG) shall not be respons ble for any deviation from this design, any fa lure to build the truss in conformance w th ANSI/TPI 1 or for handling sh pping nstallation and bracing of trusses Apply plates to each face of truss and pos t on as shown above and on the Joint Details unless noted otherw se Refer to draw ngs 160A-Z for standard plate pos tions A seal on this drawing or cover page list ng this drawing indicates acceptance of professional eng neering respons b lity solely for the design shown The su tab lity and use of this des gn for any structure is the respons bility of the Bu lding Des gner per ANSI/TPI 1 Sec 2 For more information see Th s job s general notes page ITW BCG www twbcg com TPI www tpinst org WTCA www sbc ndustry com ICC www iccsafe org

TC LL	20.0 PSF	REF	R487-- 40091
TC DL	7 0 PSF	DATE	04/19/13
BC DL	10.0 PSF	DRW	HCUSR487 13109041
BC LL	0 0 PSF	HC-ENG	WHK/WHK
TOT.LD	37 0 PSF	SEQN-	10799
DUR.FAC	1.25		
SPACING	24 0"	JREF-	1UVI487_Z05

(13-097--BRYAN ZECHER Mowry Residence -- SW Dusk Glen Rd Lake City, FL 32024 - H13CS 40' Stepdown Hip)

Top chord 2x4 SP_#1_12A
Bot chord 2x4 SP_#1_12A
Webs 2x4 SP_#3__12A

Lumber grades designated with "12A" use design values approved 1/5/2012 by ALSC

(a) 1x4 #3SRB SPF-S or better "T" brace 80% length of web member Attach with 8d Box or Gun (0 113"x2 5",min)nails @ 6" OC

Bottom chord checked for 10 00 psf non-concurrent live load

MWFRS loads based on trusses located at least 7 50 ft from roof edge

120 mph wind, 15 00 ft mean hgt, ASCE 7-10, CLOSED bldg, not located within 13 00 ft from roof edge, RISK CAT II, EXP B, wind TC DL=3 5 psf, wind BC DL=5 0 psf GCpi(+/-)=0 18

Wind loads and reactions based on MWFRS with additional C&C member design

In lieu of structural panels use purlins to brace all flat TC @ 24" OC

Deflection meets L/240 live and L/180 total load Creep increase factor for dead load is 1 50

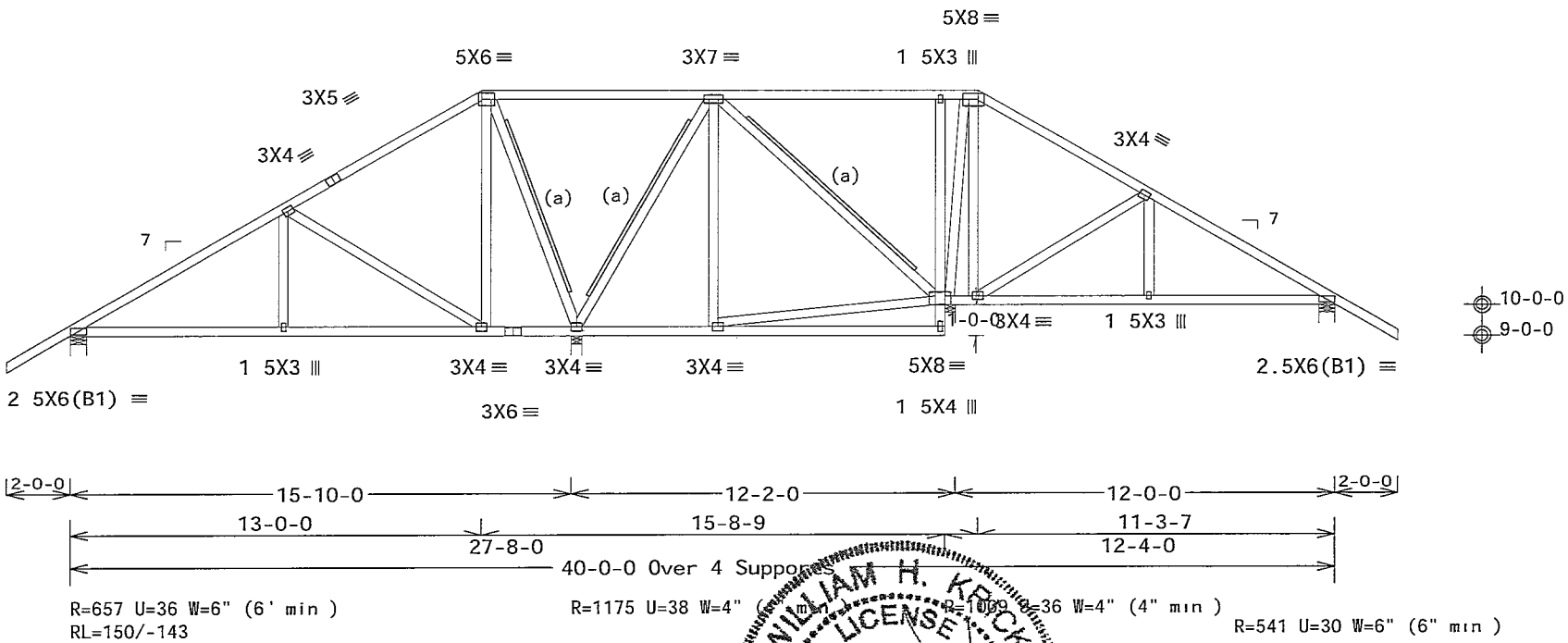

Design Crit: FBC2010Res/TPI-2007(STD)
FT/RT=10%(0%)/0(0)

PLT TYP. Wave

12.03 04.0326.14 QTY 1 FL/-/3/-/-/R/- Scale =.1875"/Ft.

WILLIAM H. KRUCK LICENSE No. 70861 STATE OF FLORIDA PROFESSIONAL ENGINEER
04/19/2013

ALPINE
ITW Building Components Group Inc.
Haines City, FL 33844
FL COA #0 278

WARNING READ AND FOLLOW ALL NOTES ON THIS SHEET!
IMPORTANT FURNISH THIS DESIGN TO ALL CONTRACTORS INCLUDING INSTALLERS

Trusses requ re extreme care in fabricat ng handling shipping nstalling and bracing Refer to and follow the latest ed t on of BCSI (Building Component Safety Information by TPI and WTCA) for handling, installation and bracing practices pr or to performing these funct ons Installers shall provide temporary bracing per BCSI. Unless noted otherw se top chord shall have properly attached structural sheathing and bottom chord shall have a properly attached r g d ceiling Locations shown for permanent lateral restraint of webs shall have brac ng installed per BCSI sections B3 B7 or B10 as applicable

ITW Bu ld ng Components Group Inc (ITWBCG) shall not be respons ble for any dev ation from this design, any fa lure to bu ld the truss in conformance w th ANSI/TPI 1 or for hand ng sh pp ng nstallation and bracing of trusses Apply plates to each face of truss and pos t on as shown above and on the Joint Deta ls unless noted otherw se Refer to draw ngs 160A-Z for standard plate pos tions A seal on th s drawing or cover page listing this draw ng indicates acceptance of profess onal engineer ng respons b l ty solely for the design shown The su tab lity and use of this des gn for any structure s the respons bility of the Bu ld ng Des gner per ANSI/TPI 1 Sec 2 For more nformation see Th s job s general notes page ITW BCG www itwbcg com TPI www tpinst org WTCA www sbc ndustry com ICC www iccsafe org

TC LL	20 0 PSF	REF	R487-- 40092
TC DL	7 0 PSF	DATE	04/19/13
BC DL	10.0 PSF	DRW	HCUSR487 13109042
BC LL	0 0 PSF	HC-ENG	WHK/WHK
TOT LD	37.0 PSF	SEQN-	10800
DUR FAC	1 25		
SPACING	24 0"	JREF-	1UVI487_Z05

Top chord 2x4 SP_#1_12A
Bot chord 2x4 SP_#1_12A
Webs 2x4 SP_#3__12A

Lumber grades designated with "12A" use design values approved 1/5/2012 by ALSC

Left end vertical not exposed to wind pressure

(a) Continuous lateral bracing equally spaced on member

Bottom chord checked for 10 00 psf non-concurrent live load

MWFRS loads based on trusses located at least 15 00 ft from roof edge

120 mph wind, 15 00 ft mean hgt, ASCE 7-10, CLOSED bldg, not located within 13 00 ft from roof edge, RISK CAT II, EXP B, wind TC DL=3 5 psf, wind BC DL=5 0 psf GCpi(+/-)=0 18

Wind loads and reactions based on MWFRS with additional C&C member design

Max JT VERT DEFL LL 0 14' DL 0 20" recommended camber 3/8"

In lieu of structural panels use purlins to brace all flat TC @ 24" OC

Deflection meets L/240 live and L/180 total load Creep increase factor for dead load is 1 50

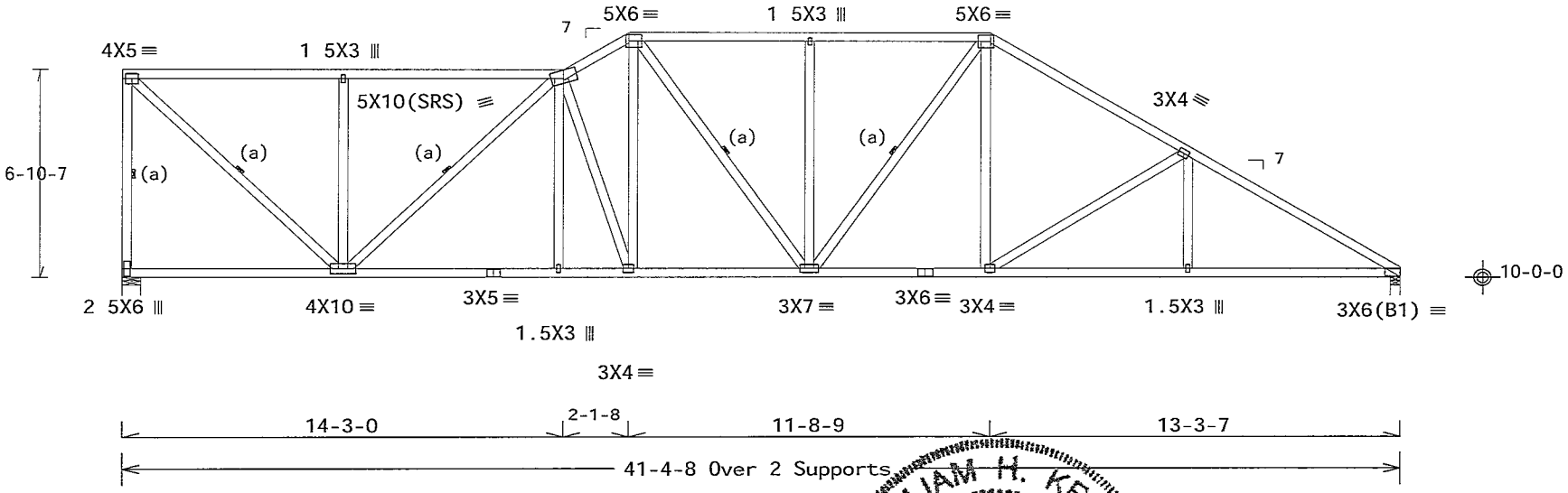

R=1571 U=5 W=6 985" (6 985" min)
RL=50/-91

R=1582 U=0 W=4' (4" min)

Design Crit. FBC2010Res/TPI-2007(STD)
FT/RT=10%(0%)/0(0)

PLT TYP. Wave

12.03.04.0326.14 QTY 1

FL/-/3/-/-/R/-

Scale =.1875"/Ft.

WILLIAM H. KRICK
LICENSE
No. 70861
STATE OF FLORIDA
PROFESSIONAL ENGINEER
04/19/2013

ALPINE
ITW Building Components Group Inc.
Haines City, FL 33844
FL COA #0 278

WARNING READ AND FOLLOW ALL NOTES ON THIS SHEET!
IMPORTANT FURNISH THIS DESIGN TO ALL CONTRACTORS INCLUDING INSTALLERS

Trusses require extreme care in fabr cat ng handl ng shipping nstall ng and bracing Refer to and follow the latest edition of BCSI (Bu ld ng Component Safety Information by TPI and WTCA) for recommended practices pr or to performing these funct ons Installers shall provide temporary bracing per BCSI Unless noted otherw se top chord shall have properly attached structural sheath ng and bottom chord shall have a properly attached r gid ceil ng Locat ons shown for permanent lateral restra nt of webs shall have brac ng nstalled per BCSI sections B3 B7 or B10 as applicable

ITW Building Components Group Inc (ITWBCG) shall not be responsible for any deviat on from th s design, any fa lure to bu ld the truss in conformance w th ANSI/TPI 1 or for handl ng shipping nstallat on & bracing of trusses Apply plates to each face of truss and pos t on as shown above and on the Joint Details unless noted otherw se Refer to draw ngs 160A-Z for standard plate pos t ons A seal on this drawing or cover page list ng this draw ng nd cates acceptance of profess onal engineer ng respons bility solely for the des gn shown The su tab l ty and use of th s des gn for any structure is the responsibility of the Bu lding Des gner per ANSI/TPI 1 Sec 2 For more nformation see This job s general notes page ITW BCG www twbcg com TPI www tpinst org WTCA www sbc ndustry com ICC www iccsafe org

TC LL	20 0 PSF	REF	R487-- 40093
TC DL	7 0 PSF	DATE	04/19/13
BC DL	10.0 PSF	DRW	HCUSR487 13109043
BC LL	0 0 PSF	HC-ENG	WHK/WHK
TOT LD	37 0 PSF	SEQN-	10801
DUR FAC.	1 25		
SPACING	24 0"	JREF-	1UVI487_Z05

(13-097--BRYAN ZECHER Mowry Residence -- SW Dusk Glen Rd Lake City, FL 32024 - H15CS 40' Stepdown Hip)

Top chord 2x4 SP_#1_12A
Bot chord 2x4 SP_#1_12A
Webs 2x4 SP_#3__12A

Lumber grades designated with "12A" use design values approved 1/5/2012 by ALSC

(a) 1x4 #3SRB SPF-S or better "T" brace 80% length of web member Attach with 8d Box or Gun (0 113"x2 5',min)nails @ 6" OC

Bottom chord checked for 10 00 psf non-concurrent live load

MWFRS loads based on trusses located at least 15 00 ft from roof edge

120 mph wind, 15 00 ft mean hgt, ASCE 7-10, CLOSED bldg, not located within 13 00 ft from roof edge, RISK CAT II, EXP B, wind TC DL=3 5 psf, wind BC DL=5 0 psf GCpi(+/-)=0 18

Wind loads and reactions based on MWFRS with additional C&C member design

In lieu of structural panels use purlins to brace all flat TC @ 24" OC

Deflection meets L/240 live and L/180 total load Creep increase factor for dead load is 1 50

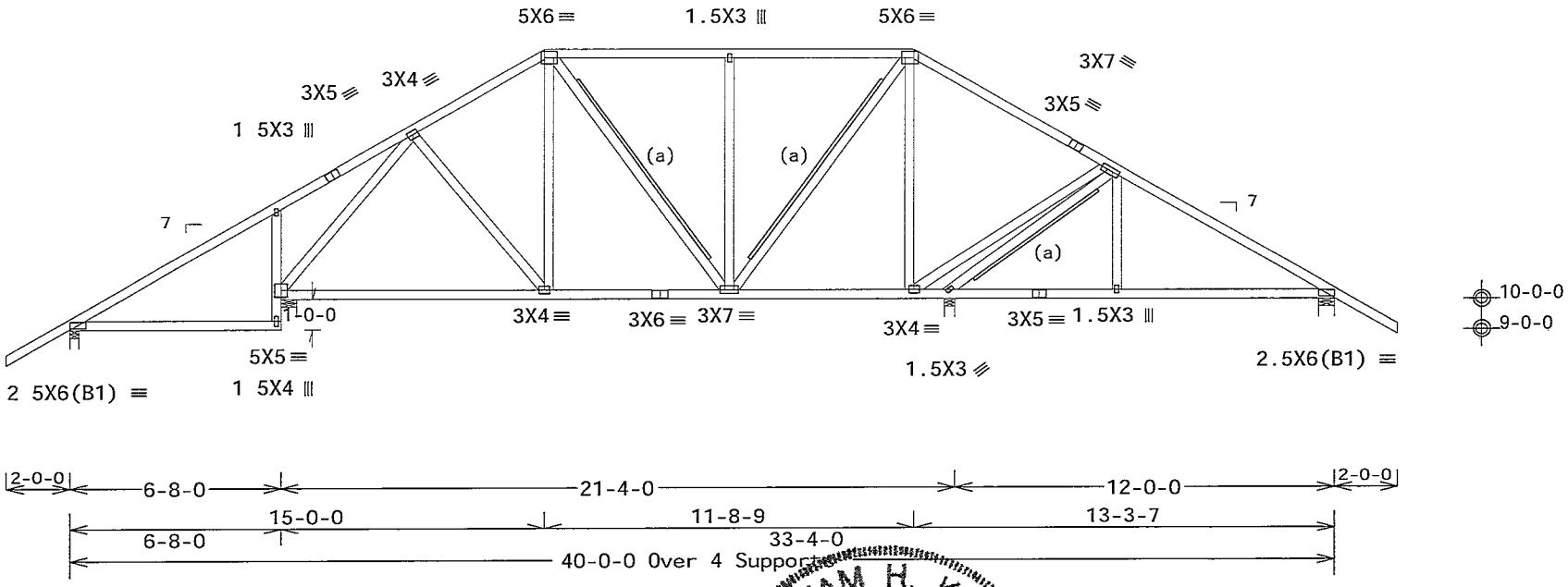

Design Crit· FBC2010Res/TPI-2007(STD)
FT/RT=10%(0%)/0(0)

PLT TYP. Wave

12 03 04 0326 14 QTY 1 FL/-/3/-/-/R/- Scale =.1875"/Ft

ALPINE
ITW Building Components Group Inc.
Haines City, FL 33844
FL COA #0 278

WARNING READ AND FOLLOW ALL NOTES ON THIS SHEET!
IMPORTANT FURNISH THIS DESIGN TO ALL CONTRACTORS INCLUDING INSTALLERS

Trusses requ re extreme care n fabricat ng handling shipping installing and bracing Refer to and follow the latest ed t on of BCSI (Build ng Component Safety Information by TPI and WTCA) for safety practices pr or to performing these funct ons Installers shall provide temporary bracing per safety Unless noted otherw se top chord shall have properly attached structural sheath ng and bottom chord shall have a properly attached r gid ceil ng Locations shown for permanent lateral restraint of webs shall have brac ng installed per BCSI sections B3 B7 or B10 as applicable

ITW Building Components Group Inc (ITWBCG) shall not be responsible for any deviat on from this design any fa lure to bu ld the truss n conformance with ANSI/TPI 1 or for handling shipp ng nstallat on and bracing of trusses Apply plates to each face of truss and position as shown above and on the Jo nt Details unless noted otherw se Refer to drawings 160A-Z for standard plate pos t ons A seal on th s drawing or cover page listing th s drawing nd cates acceptance of profess onal eng neer ng responsibility solely for the des gn shown The suitabil ty and use of th s design for any structure s the responsib l ty of the Build ng Designer per ANSI/TPI 1 Sec 2 For more informat on see Th s job s general notes page ITW-BCG www itwbcg com TPI www tp nst org WTCA www sbcindustry com ICC www ccsafc org

WILLIAM H. KRICK LICENSE No 70861 STATE OF FLORIDA PROFESSIONAL ENGINEER
04/19/2013

TC LL	20.0 PSF	REF	R487-- 40094
TC DL	7.0 PSF	DATE	04/19/13
BC DL	10 0 PSF	DRW	HCUSR487 13109044
BC LL	0 0 PSF	HC-ENG	WHK/WHK
TOT LD	37 0 PSF	SEQN-	10802
DUR FAC	1.25		
SPACING	24.0"	JREF-	1UV1487_Z05

(13-097--BRYAN ZECHER Mowry Residence -- SW Dusk Glen Rd Lake City, FL 32024 - H17C 41'4"8 Stepdown Hip)

THIS DWG PREPARED FROM COMPUTER INPUT (LOADS & DIMENSIONS) SUBMITTED BY TRUSS MFR

Top chord 2x4 SP_#1_12A
Bot chord 2x4 SP_#1_12A
Webs 2x4 SP_#3__12A

Lumber grades designated with 12A' use design values approved 1/5/2012 by ALSC

Left end vertical not exposed to wind pressure

(a) Continuous lateral bracing equally spaced on member

Bottom chord checked for 10 00 psf non-concurrent live load

MWFRS loads based on trusses located at least 15 00 ft from roof edge

120 mph wind, 15 00 ft mean hgt, ASCE 7-10, CLOSED bldg, not located within 13 00 ft from roof edge, RISK CAT II, EXP B, wind TC DL=3 5 psf, wind BC DL=5 0 psf GCpi(+/-)=0 18

Wind loads and reactions based on MWFRS with additional C&C member design

Left cantilever is exposed to wind

In lieu of structural panels use purlins to brace all flat TC @ 24' OC

Deflection meets L/240 live and L/180 total load Creep increase factor for dead load is 1 50

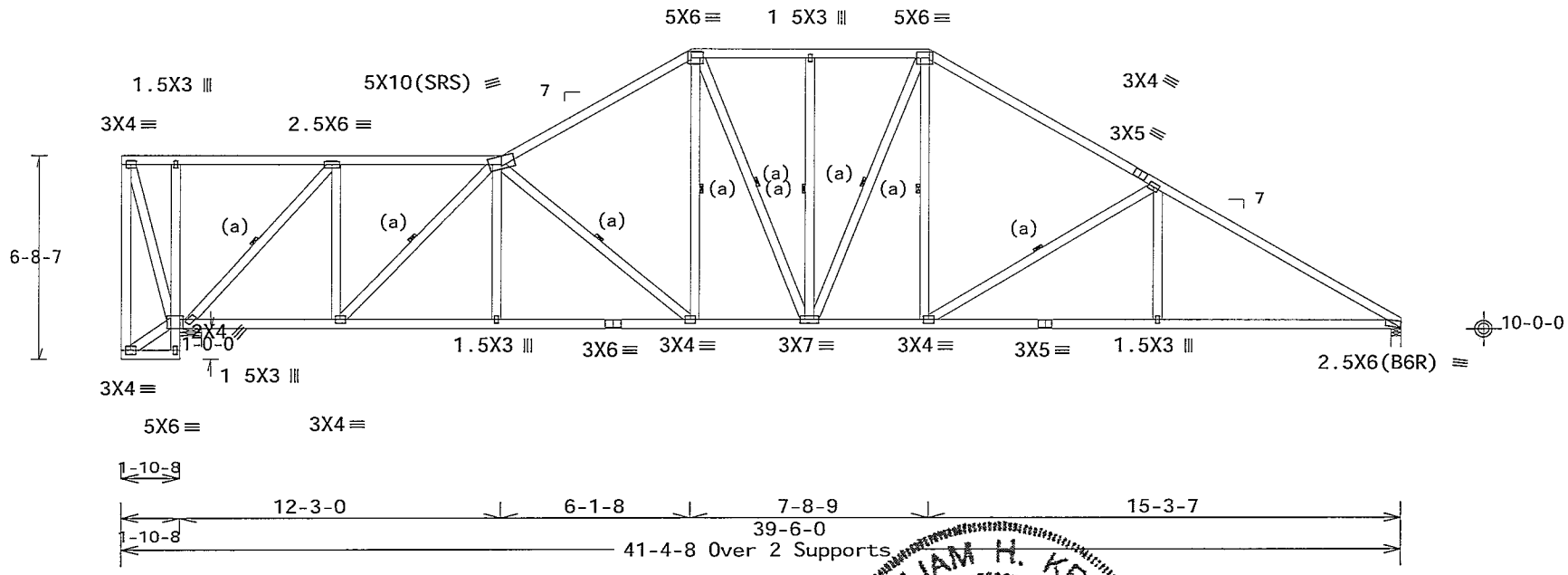

R=1661 U=0 W=8 485' (8 485 min)
RL=81/-115

R=1495 U=0 W=4 (4 min)

Design Crit. FBC2010Res/TPI-2007(STD)

PLT TYP Wave FT/RT=10%(0%)/0(0) 12.03.04.0326.14 QTY 1 FL/-/3/-/-/R/- Scale =.1875"/Ft.

WILLIAM H. KRICK LICENSE No. 70861 STATE OF FLORIDA PROFESSIONAL ENGINEER

04/19/2013

ALPINE
ITW Building Components Group Inc.
Haines City, FL 33844
FL COA #0 278

WARNING READ AND FOLLOW ALL NOTES ON THIS SHEET!
IMPORTANT FURNISH THIS DESIGN TO ALL CONTRACTORS INCLUDING INSTALLERS

Trusses requ re extreme care n fabricat ng handling shipping nstalling and bracing Refer to and follow the latest ed tion of BCSI (Building Component Safety Information by TPI and WTCA) for guidelines pract ces pr or to performing these funct ons Installers shall provide temporary bracing per BCSI Unless noted otherw se top chord shall have properly attached structural sheath ng and bottom chord shall have a properly attached r g d ceiling Locations shown for permanent lateral restraint of webs shall have brac ng installed per BCSI sections B3 B7 or B10 as applicable

ITW Building Components Group Inc (ITWBCG) shall not be respons ble for any dev ation from this design any fa lure to build the truss in conformance w th ANSI/TPI 1 or for handl ng sh pping nstallation or bracing of trusses Apply plates to each face of truss and pos t on as shown above and on the Joint Deta ls unless noted otherwise Refer to draw ngs 160A-Z for standard plate positions A seal on this draw ng or cover page listing this draw ng indicates acceptance of profess onal engineering respons b l ty solely for the design shown The su tab lity and use of this design for any structure is the respons b l ty of the Build ng Designer per ANSI/TPI 1 Sec 2 For more informat on see Th s job s general notes page ITW BCG www itwbcg com TPI www tpinst org WTCA www sbcindustry com ICC www ccsafe org

TC LL	20 0 PSF	REF	R487-- 40095
TC DL	7 0 PSF	DATE	04/19/13
BC DL	10 0 PSF	DRW	HCUSR487 13109045
BC LL	0.0 PSF	HC-ENG	WHK/WHK
TOT LD	37.0 PSF	SEQN-	10803
DUR FAC.	1 25		
SPACING	24 0"	JREF-	1UVI487_Z05

(13-097--BRYAN ZECHER Mowry Residence -- SW Dusk Glen Rd Lake City, FL 32024 - H17CT 40 Stepdown Hip)

Top chord 2x4 SP_#1_12A
Bot chord 2x4 SP_#1_12A
Webs 2x4 SP_#3__12A

Lumber grades designated with 12A' use design values approved 1/5/2012 by ALSC

(a) 1x4 #3SRB SPF-S or better 'T" brace 80% length of web member Attach with 8d Box or Gun (0 113"x2 5",min)nails @ 6" OC

In lieu of structural panels use purlins to brace all flat TC @ 24" OC

MWFRS loads based on trusses located at least 15 00 ft from roof edge

120 mph wind, 15 00 ft mean hgt, ASCE 7-10, CLOSED bldg, not located within 13 00 ft from roof edge, RISK CAT II, EXP B, wind TC DL=3 5 psf, wind BC DL=5 0 psf GCpi(+/-)=0 18

Wind loads and reactions based on MWFRS with additional C&C member design

(b) #3 or better scab brace Same size & 80% length of web member Attach with 10d Box or Gun (0 128'x3",min)nails @ 6" OC

Bottom chord checked for 10 00 psf non-concurrent live load

Deflection meets L/240 live and L/180 total load Creep increase factor for dead load is 1 50

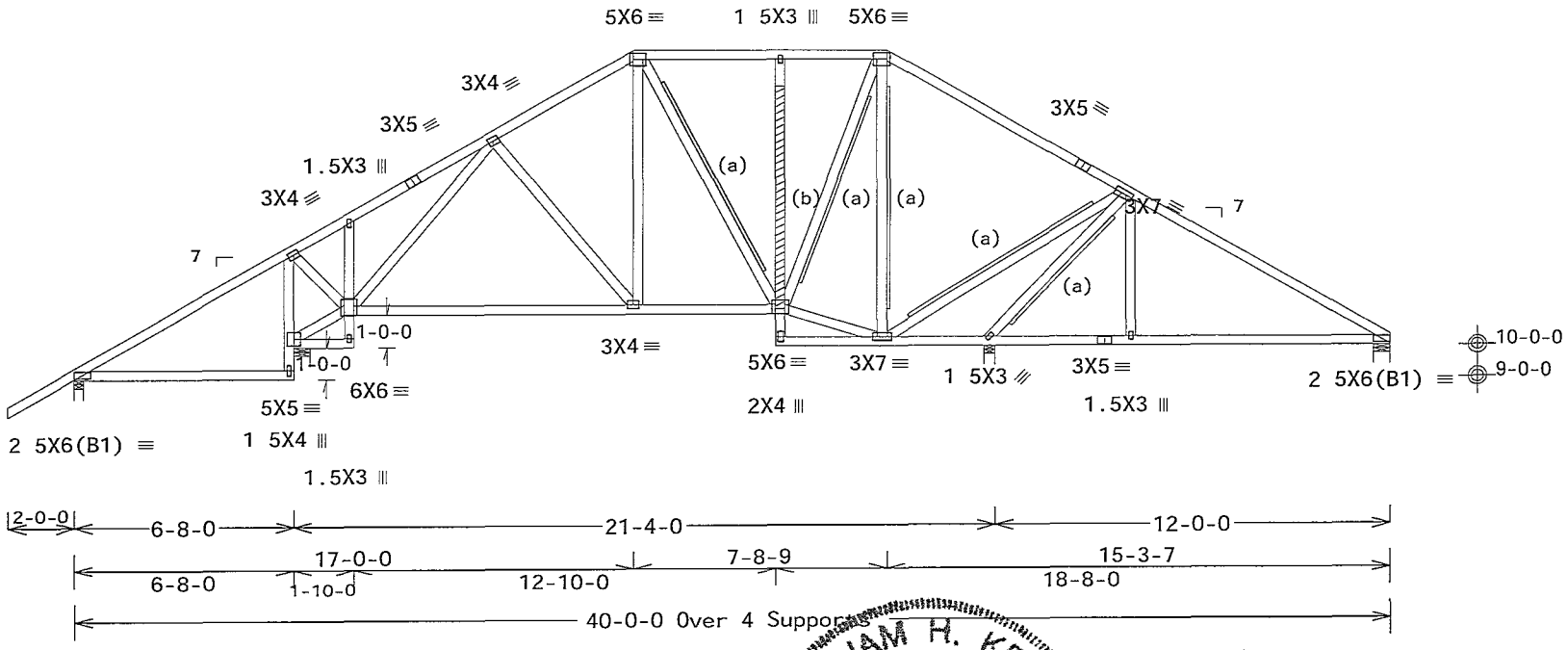

R=371 U=31 W=3 5 (3 5 min)
RL=163/-167

R=1202 U=0 W=6' (6 min)

R=947 U=0 W=4' (4" min)

R=669 U=0 W=6" (6" min)

Design Crit FBC2010Res/TPI-2007(STD)
FT/RT=10%(0%)/0(0)

PLT TYP. Wave

12.03 04 0826 14 QTY 1 FL/-/3/-/-/R/- Scale =.1875"/Ft.

WILLIAM H. KRICK LICENSE No. 70861 STATE OF FLORIDA PROFESSIONAL ENGINEER
04/19/2013

ALPINE
ITW Building Components Group Inc.
Haines City FL 33844
FL COA #0 278

WARNING READ AND FOLLOW ALL NOTES ON THIS SHEET!
IMPORTANT FURNISH THIS DESIGN TO ALL CONTRACTORS INCLUDING INSTALLERS

Trusses requ re extreme care n fabricating handling sh pping installing and brac ng Refer to and follow the latest edit on of BCSI (Building Component Safety Informat on by TPI and WTCA) for safety practices prior to performing these functions Installers shall prov de temporary brac ng per BCSI Unless noted otherwise top chord shall have properly attached structural sheathing and bottom chord shall have a properly attached rig d ceiling Locations shown for permanent lateral restra nt shall have bracing installed per BCSI sect ons B3 B7 or B10 as applicable

ITW Bu ld ng Components Group Inc (ITWBCG) shall not be respons ble for any dev ation from this design any fa lure to build the truss in conformance with ANSI/TPI 1 or for handling sh pping installation brac ng of trusses Apply plates to each face of truss and position as shown above and on the Joint Deta ls unless noted otherwise Refer to drawings 160A-Z for standard plate posit ons A seal on this draw ng or cover page listing this drawing indicates acceptance of professional eng neering responsibility solely for the design shown The suitability and use of this design for any structure s the respons b l ty of the Building Designer per ANSI/TPI 1 Sec 2 For more informat on see Th s job s general notes page ITW-BCG www itwbcg com TPI www tp nst org WTCA www sbcindustry com ICC www iccsafe org

TC LL	20 0 PSF	REF	R487-- 40096
TC DL	7.0 PSF	DATE	04/19/13
BC DL	10 0 PSF	DRW	HCUSR487 13109046
BC LL	0 0 PSF	HC-ENG	WHK/WHK
TOT.LD.	37.0 PSF	SEQN-	10804
DUR.FAC.	1.25		
SPACING	24.0"	JREF-	1UVI487_Z05

(13-097--BRYAN ZECHER Mowry Residence -- SW Dusk Glen Rd Lake City, FL 32024 - H19C 41 4'8 Special)

THIS DWG PREPARED FROM COMPUTER INPUT (LOADS & DIMENSIONS) SUBMITTED BY TRUSS MFR

Top chord 2x4 SP_#1_12A
Bot chord 2x4 SP_#1_12A
Webs 2x4 SP_#3__12A

Lumber grades designated with "12A" use design values approved 1/5/2012 by ALSC

Left end vertical not exposed to wind pressure

(a) Continuous lateral bracing equally spaced on member

Bottom chord checked for 10 00 psf non-concurrent live load

MWFRS loads based on trusses located at least 15 40 ft from roof edge

120 mph wind, 15 40 ft mean hgt, ASCE 7-10, CLOSED bldg, not located within 13 00 ft from roof edge, RISK CAT II, EXP B, wind TC DL=3 5 psf, wind BC DL=5 0 psf GCpi(+/-)=0 18

Wind loads and reactions based on MWFRS with additional C&C member design

Left cantilever is exposed to wind

In lieu of structural panels use purlins to brace all flat TC @ 24" OC

Deflection meets L/240 live and L/180 total load Creep increase factor for dead load is 1 50

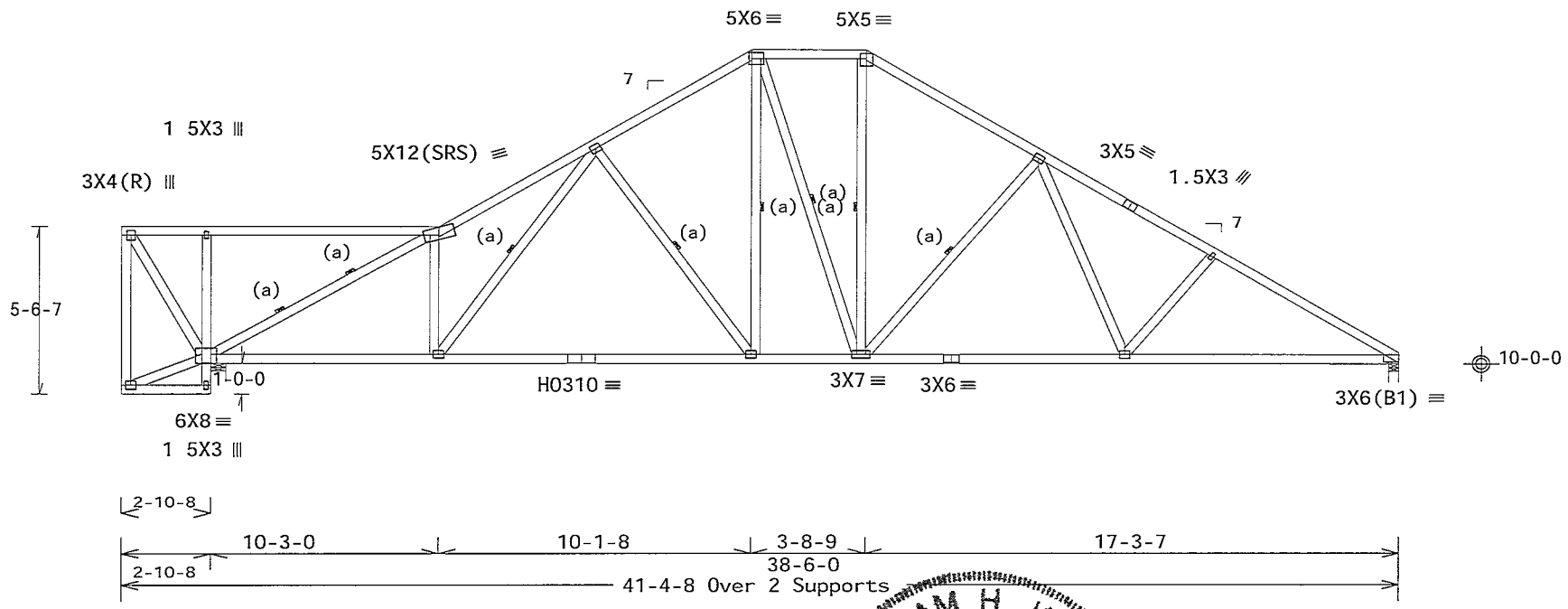

R=1682 U=0 W=6' (6' min)
RL=113/-139

R=1475 U=0 W=4" (4" min)

Note. All Plates Are 3X4 Except As Shown.

Design Crit FBC2010Res/TPI-2007(STD)

PLT TYP. 20 Gauge HS,Wave FT/RT=10%(0%)/0(0) 12 03 04 0326 14 QTY:1 FL/-/3/-/-/R/- Scale =.1875"/Ft.

ALPINE
ITW Building Components Group Inc.
Haines City, FL 33844
FL COA #0 278

WARNING READ AND FOLLOW ALL NOTES ON THIS SHEET!
IMPORTANT FURNISH THIS DESIGN TO ALL CONTRACTORS INCLUDING INSTALLERS

Trusses require extreme care in fabr cating handl ng sh pp ng nstall ng and bracing Refer to and follow the latest edition of BCSI (Bu ld ng Component Safety Information by TPI and WTCA) for safety pract ces prior to performing these functions Installers shall provide temporary bracing per BCSI. Unless noted otherwise top chord shall have properly attached structural sheath ng and bottom chord shall have a properly attached rigid ce l ng Locat ons shown for permanent lateral restraint of webs shall have brac ng nstalled per BCSI sections B3 B7 or B10 as applicable

ITW Build ng Components Group Inc (ITWBCG) shall not be responsible for any deviat on from th designs any failure to bu ld the truss n conformance w th ANSI/TPI 1 or for handling shipp ng installation and bracing of trusses Apply plates to each face of truss and position as shown above and on the Jo nt Details unless noted otherw se Refer to drawings 160A-Z for standard plate pos tions A seal on this drawing or cover page listing this drawing ndicates acceptance of profess onal engineering respons bility solely for the des gn shown The suitabil ty and use of th s design for any structure is the responsibility of the Bu lding Designer per ANSI/TPI 1 Sec 2 For more nformation see This job s general notes page ITW BCG www twbcg com TPI www tp nst org WTCA www sbcindustry com ICC www iccsafe org

WILLIAM H. KRICK LICENSE No. 70861 STATE OF FLORIDA PROFESSIONAL ENGINEER
04/19/2013

TC LL	20.0 PSF	REF	R487-- 40097
TC DL	7.0 PSF	DATE	04/19/13
BC DL	10 0 PSF	DRW	HCUSR487 13109047
BC LL	0.0 PSF	HC-ENG	WHK/WHK
TOT.LD.	37.0 PSF	SEQN-	10805
DUR.FAC.	1.25		
SPACING	24.0"	JREF-	1UV1487_Z05

THIS DWG PREPARED FROM COMPUTER INPUT (LOADS & DIMENSIONS) SUBMITTED BY TRUSS MFR

(13-097--BRYAN ZECHER Mowry Residence -- SW Dusk Glen Rd Lake City, FL 32024 - H19CT 40' Stepdown Hip)

Top chord 2x4 SP_#1_12A
Bot chord 2x4 SP_#1_12A
Webs 2x4 SP_#3__12A

Lumber grades designated with "12A" use design values approved 1/5/2012 by ALSC

Calculated horizontal deflection is 0 10' due to live load and 0 18" due to dead load

(a) #3 or better scab brace Same size & 80% length of web member Attach with 10d Box or Gun (0 128'x3",min)nails @ 6" OC

Bottom chord checked for 10 00 psf non-concurrent live load

MWFRS loads based on trusses located at least 15 00 ft from roof edge

120 mph wind, 15 00 ft mean hgt, ASCE 7-10, CLOSED bldg, not located within 13 00 ft from roof edge, RISK CAT II, EXP B, wind TC DL=3 5 psf, wind BC DL=5 0 psf GCpi(+/-)=0 18

Wind loads and reactions based on MWFRS with additional C&C member design

(b) 1x4 #3SRB SPF-S or better "T" brace 80% length of web member Attach with 8d Box or Gun (0 113"x2 5",min)nails @ 6" OC

In lieu of structural panels use purlins to brace all flat TC @ 24" OC

Deflection meets L/240 live and L/180 total load Creep increase factor for dead load is 1 50

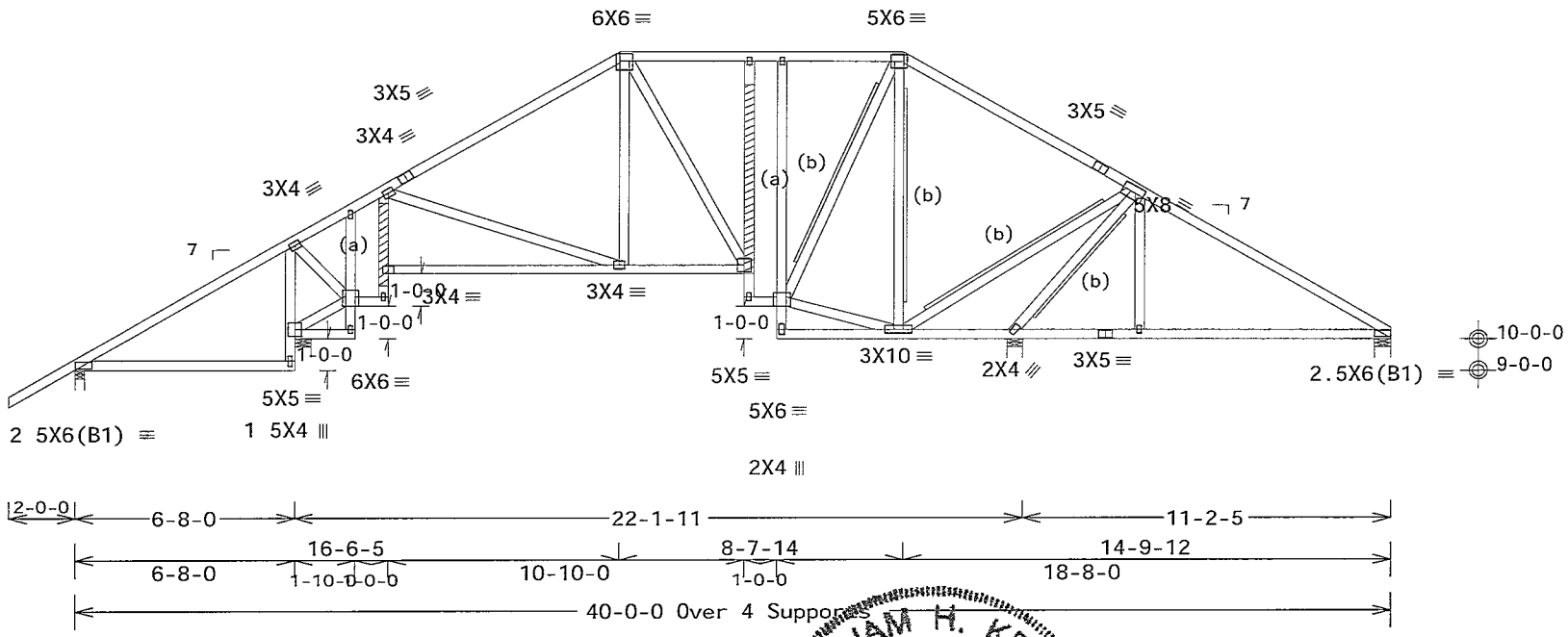

R=342 U=44 W=3 5" (3 5" min)
RL=159/-163 R=1038 U=0 W=6" (6" min)

R=1724 U=0 W=5 657 (5 657" min)
R=298 U=83 W=6" (6" min)

Note. All Plates Are 1.5X3 Except As Shown

Design Crit: FBC2010Res/TPI-2007(STD)

PLT TYP Wave FT/RT=10%(0%)/0(0) 12 03 04.0326.14 QTY=1 FL/-/3/-/-/R/- Scale =.1875"/Ft.

WILLIAM H. KRICK LICENSE No. 70861 STATE OF FLORIDA PROFESSIONAL ENGINEER

04/19/2013

ALPINE
ITW Building Components Group Inc.
Hames City, FL 33844
FL COA #0 278

WARNING READ AND FOLLOW ALL NOTES ON THIS SHEET!
IMPORTANT FURNISH THIS DESIGN TO ALL CONTRACTORS INCLUDING INSTALLERS

Trusses require extreme care in fabricat ng handling shipping nstalling and bracing Refer to and follow the latest edition of BCSI (Building Component Safety Information by TPI and WTCA) for safety practices prior to performing these funct ons Installers shall provide temporary bracing per BCSI Unless noted otherwise top chord shall have properly attached structural sheathing and bottom chord shall have a properly attached rigid ceil ng Locations shown for permanent lateral restraint of shall have brac ng installed per BCSI sections B3 B7 or B10 as applicable

ITW Building Components Group Inc (ITWBCG) shall not be responsible for any deviation from this design any fa lure to build the truss in conformance w th ANSI/TPI 1 or for handling shipping nstallation bracing of trusses Apply plates to each face of truss and pos tion as shown above and on the Joint Details unless noted otherw se Refer to draw ngs 160A-Z for standard plate pos tions A seal on this drawing or cover page listing this drawing indicates acceptance of professional engineering respons b lity solely for the design shown The su tab lity and use of this des gn for any structure is the responsibility of the Bu lding Des gner per ANSI/TPI 1 Sec 2 For more information see This job s general notes page ITW BCG www itwbcg com TPI www tpinst org WTCA www sbcindustry com ICC www iccsafe org

TC LL	20.0 PSF	REF	R487-- 40098
TC DL	7.0 PSF	DATE	04/19/13
BC DL	10.0 PSF	DRW	HCUSR487 13109048
BC LL	0.0 PSF	HC-ENG	WHK/WHK
TOT.LD.	37.0 PSF	SEQN-	10806
DUR.FAC.	1.25		
SPACING	24 0"	JREF-	1UVI487_Z05

(13-097--BRYAN ZECHER Mowry Residence -- SW Dusk Glen Rd Lake City, FL 32024 - H7A 28' Stepdown Hip Girder)

Top chord 2x4 SP_#1_12A
Bot chord 2x4 SP_#1_12A
Webs 2x4 SP_#3__12A

Lumber grades designated with 12A' use design values approved 1/5/2012 by ALSC

120 mph wind, 15 00 ft mean hgt, ASCE 7-10, CLOSED bldg, not located within 9 00 ft from roof edge, RISK CAT II, EXP B, wind TC DL=3 5 psf, wind BC DL=5 0 psf GCpi(+/-)=0 18

Wind loads and reactions based on MWFRS

(a) 2x6 #3 or better "T brace 80% length of web member Attach with 16d Box or Gun (0 135"x3 5",min)nails @ 6" OC

In lieu of structural panels use purlins to brace all flat TC @ 24" OC

Deflection meets L/240 live and L/180 total load Creep increase factor for dead load is 1 50

Special loads
------(Lumber Dur Fac =1 25 / Plate Dur Fac =1 25)
TC- From 56 plf at -2 00 to 56 plf at 7 00
TC- From 28 plf at 7 00 to 28 plf at 21 00
TC- From 56 plf at 21 00 to 56 plf at 30 00
BC- From 5 plf at -2 00 to 5 plf at 0 00
BC- From 20 plf at 0 00 to 20 plf at 7 03
BC- From 10 plf at 7 03 to 10 plf at 16 00
BC- From 10 plf at 16 00 to 10 plf at 20 97
BC- From 20 plf at 20 97 to 20 plf at 28 00
BC- From 5 plf at 28 00 to 5 plf at 30 00
TC- 241 67 lb Conc Load at 7 03,20 97
TC- 165 34 lb Conc Load at 9 06,11 06,13 06,14 94 16 94,18 94
BC- 409 87 lb Conc Load at 7 03,20 97
BC- 126 04 lb Conc Load at 9 06,11 06,13 06,14 94 16 94,18 94

Bottom chord checked for 10 00 psf non-concurrent live load

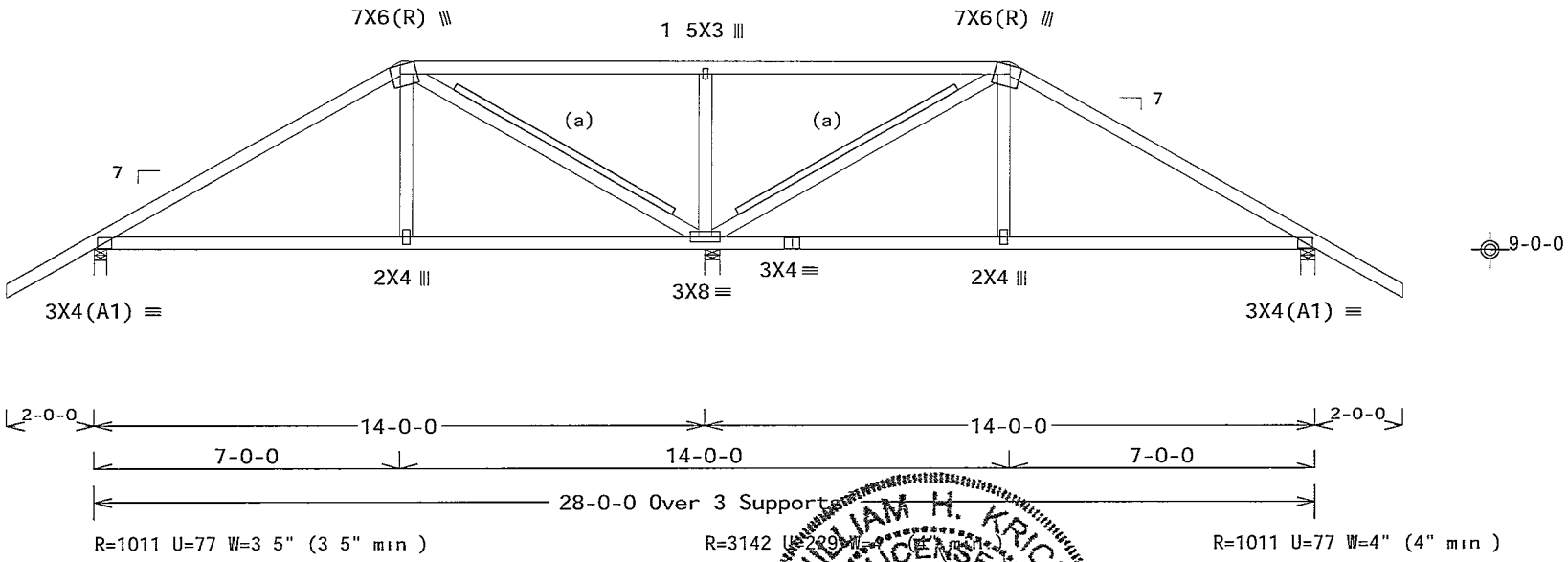

Design Crit FBC2010Res/TPI-2007(STD)
FT/RT=10%(0%)/0(0)
12 03.04.0326.14 QTY 1
FL/-/3/-/-/R/-
Scale =.25"/Ft.

PLT TYP. Wave

ALPINE
ITW Building Components Group Inc.
Haines City, FL 33844
FL COA #0 278

WARNING READ AND FOLLOW ALL NOTES ON THIS SHEET!
IMPORTANT FURNISH THIS DESIGN TO ALL CONTRACTORS INCLUDING INSTALLERS

Trusses requ re extreme care in fabricating handling shipping install ng and brac ng Refer to and follow the latest edition of BCSI (Building Component Safety Informat on by TPI and WTCA) for handling pract ces prior to perform ng these functions Installers shall provide temporary bracing per BCSI Unless noted otherwise top chord shall have properly attached structural sheathing and bottom chord shall have a properly attached r g d ce ling Locations shown for permanent lateral restra nt of webs shall have bracing installed per BCSI sect ons B3 B7 or B10 as applicable

ITW Build ng Components Group Inc (ITWBCG) shall not be respons ble for any deviation from this design, any failure to build the truss in conformance with ANSI/TPI 1 or for handling sh pping installation or brac ng of trusses Apply plates to each face of truss and posit on as shown above and on the Joint Details unless noted otherwise Refer to drawings 160A-Z for standard plate positions A seal on this draw ng or cover page listing this drawing indicates acceptance of professional engineering responsib l ty solely for the design shown The suitability and use of this design for any structure s the respons b lity of the Building Designer per ANSI/TPI 1 Sec 2 For more informat on see Th s job s general notes page ITW-BCG www itwbcg com TPI www tpinst org WTCA www sbcindustry com ICC www ccsafe org

WILLIAM H. KRICK
LICENSE
No. 70861
STATE OF FLORIDA
PROFESSIONAL ENGINEER
04/19/2013

TC LL	20.0 PSF	REF	R487-- 40099
TC DL	7.0 PSF	DATE	04/19/13
BC DL	10.0 PSF	DRW	HCUSR487 13109049
BC LL	0.0 PSF	HC-ENG	WHK/WHK
TOT.LD.	37.0 PSF	SEQN-	10815
DUR.FAC.	1.25		
SPACING	24.0"	JREF-	1UVI487_Z05

(13-097--BRYAN ZECHER Mowry Residence -- SW Dusk Glen Rd Lake City, FL 32024 - H7B 24 Stepdown Hip Girder)

Top chord 2x4 SP_#1_12A
Bot chord 2x4 SP_#1_12A
Webs 2x4 SP_#3__12A

Lumber grades designated with "12A" use design values approved 1/5/2012 by ALSC

120 mph wind, 15 00 ft mean hgt, ASCE 7-10, CLOSED bldg, not located within 9 00 ft from roof edge, RISK CAT II, EXP B, wind TC DL=3 5 psf, wind BC DL=5 0 psf GCpi(+/-)=0 18

Wind loads and reactions based on MWFRS

In lieu of structural panels use purlins to brace all flat TC @ 24' OC

Bottom chord checked for 10 00 psf non-concurrent live load

Special loads
------(Lumber Dur Fac =1 25 / Plate Dur Fac =1 25)

TC- From	56 plf at -2 00 to	56 plf at 7 00			
TC- From	28 plf at 7 00 to	28 plf at 17 00			
TC- From	56 plf at 17 00 to	56 plf at 26 00			
BC- From	5 plf at -2 00 to	5 plf at 0 00			
BC- From	20 plf at 0 00 to	20 plf at 7 03			
BC- From	10 plf at 7 03 to	10 plf at 14 00			
BC- From	10 plf at 14 00 to	10 plf at 16 97			
BC- From	20 plf at 16 97 to	20 plf at 24 00			
BC- From	5 plf at 24 00 to	5 plf at 26 00			
TC- 241 67 lb Conc Load at 7 03,16 97					
TC- 314 01 lb Conc Load at 9 06,11 06,12 94,14 94					
BC- 409 87 lb Conc Load at 7 03,16 97					
BC- 117 77 lb Conc Load at 9 06,11 06,12 94,14 94					

Deflection meets L/240 live and L/180 total load Creep increase factor for dead load is 1 50

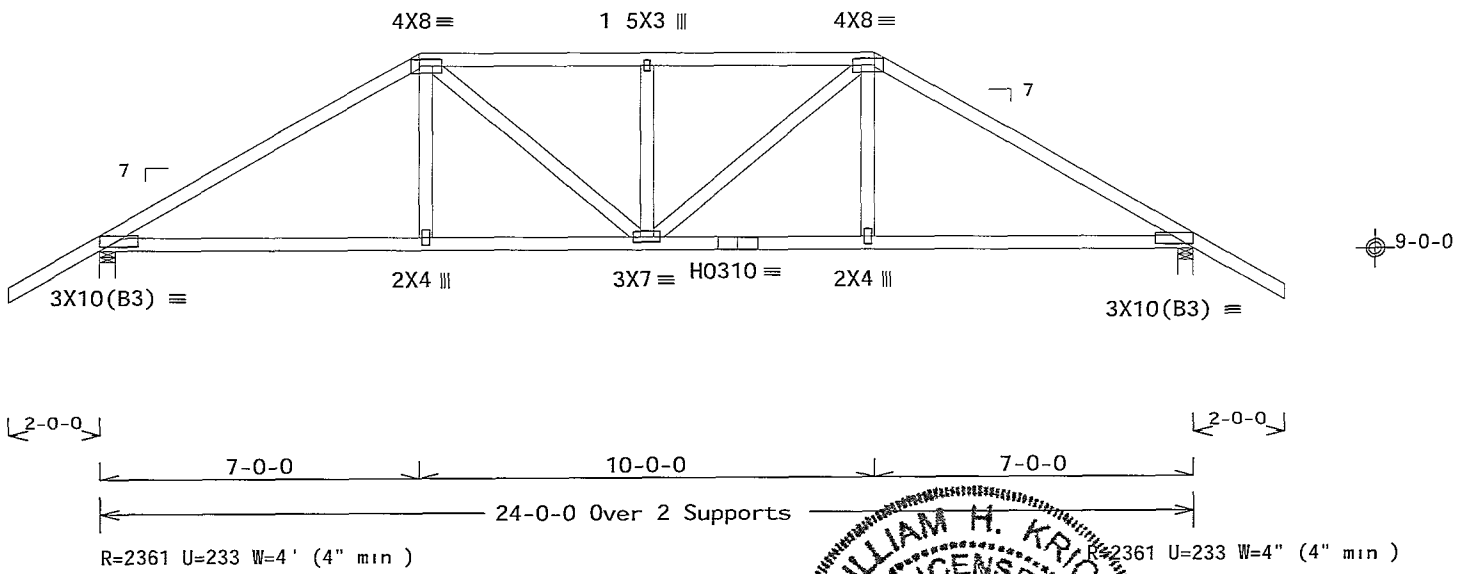

Design Crit: FBC2010Res/TPI-2007(STD)
FT/RT=10%(0%)/0(0)

PLT TYP 20 Gauge HS,Wave

1 2.03.04.0326.14 QTY 1 FL/-/3/-/-/R/- Scale =.25"/Ft.

WILLIAM H. KRICK LICENSE No. 70861 STATE OF FLORIDA PROFESSIONAL ENGINEER
04/19/2013

ALPINE
ITW Building Components Group Inc.
Haines City, FL 33844
FL COA #0 278

WARNING READ AND FOLLOW ALL NOTES ON THIS SHEET!
IMPORTANT FURNISH THIS DESIGN TO ALL CONTRACTORS INCLUDING INSTALLERS

Trusses requ re extreme care in fabricat ng handling shipping nstalling and bracing Refer to and follow the latest ed tion of BCSI (Building Component Safety Information by TPI and WTCA) for safety practices prior to performing these functions Installers shall provide temporary brac ng per BCSI Unless noted otherw se top chord shall have properly attached structural sheathing and bottom chord shall have a properly attached r g d ce l ng Locations shown for permanent lateral restra nt of shall have bracing nstalled per BCSI sect ons B3 B7 or B10 as appl cable

ITW Build ng Components Group Inc (ITWBCG) shall not be responsible for any dcviat on from th s dcs gn any fa lure to bu ld the truss n conformance w th ANSI/TPI 1 or for handling shipping nstallation bracing of trusses Apply plates to each face of truss and pos t on as shown above and on the Joint Deta ls unless noted otherwise Refer to drawings 160A-Z for standard plate positions A seal on this draw ng or cover page listing this draw ng indicates acceptance of professional engineering responsib l ty solely for the des gn shown The suitability and use of this design for any structure is the responsib l ty of the Build ng Designer per ANSI/TPI 1 Sec 2 For more informat on sec Th s job s general notes page ITW-BCG www twbcg com TPI www tp nst org WTCA www sbc ndustry com ICC www iccsafe org

TC LL	20.0 PSF	REF	R487-- 40100
TC DL	7.0 PSF	DATE	04/19/13
BC DL	10.0 PSF	DRW	HCUSR487 13109050
BC LL	0.0 PSF	HC-ENG	WHK/WHK
TOT LD.	37.0 PSF	SEQN-	10816
DUR FAC.	1 25		
SPACING	24 0"	JREF-	1UV1487_Z05

THIS DWG PREPARED FROM COMPUTER INPUT (LOADS & DIMENSIONS) SUBMITTED BY TRUSS MFR

(13-097--BRYAN ZECHER Mowry Residence -- SW Dusk Glen Rd Lake City, FL 32024 - H7BG 24' Stepdown Hip Girder)

Top chord 2x4 SP_#1_12A
Bot chord 2x4 SP_#1_12A
Webs 2x4 SP_#3__12A

Lumber grades designated with "12A" use design values approved 1/5/2012 by ALSC

120 mph wind, 15 00 ft mean hgt, ASCE 7-10, CLOSED bldg, not located within 9 00 ft from roof edge, RISK CAT II, EXP B, wind TC DL=3 5 psf, wind BC DL=5 0 psf GCpi(+/-)=0 18

Wind loads and reactions based on MWFRS

In lieu of structural panels use purlins to brace all flat TC @ 24" OC

Bottom chord checked for 10 00 psf non-concurrent live load

Deflection meets L/240 live and L/180 total load Creep increase factor for dead load is 1 50

Special loads
------(Lumber Dur Fac =1 25 / Plate Dur Fac =1 25)
TC- From 56 plf at -2 00 to 56 plf at 7 00
TC- From 28 plf at 7 00 to 28 plf at 14 21
TC- From 56 plf at 14 21 to 56 plf at 17 00
TC- From 56 plf at 17 00 to 56 plf at 26 00
BC- From 5 plf at -2 00 to 5 plf at 0 00
BC- From 20 plf at 0 00 to 20 plf at 7 03
BC- From 10 plf at 7 03 to 10 plf at 12 00
BC- From 10 plf at 12 00 to 10 plf at 14 21
BC- From 20 plf at 14 21 to 20 plf at 24 00
BC- From 5 plf at 24 00 to 5 plf at 26 00
TC- 252 56 lb Conc Load at 7 03
TC- 176 23 lb Conc Load at 9 06,10 94,12 94
TC- -22 73 lb Conc Load at 14 21
BC- 413 11 lb Conc Load at 7 03
BC- 129 28 lb Conc Load at 9 06,10 94,12 94
BC- 578 53 lb Conc Load at 14 21

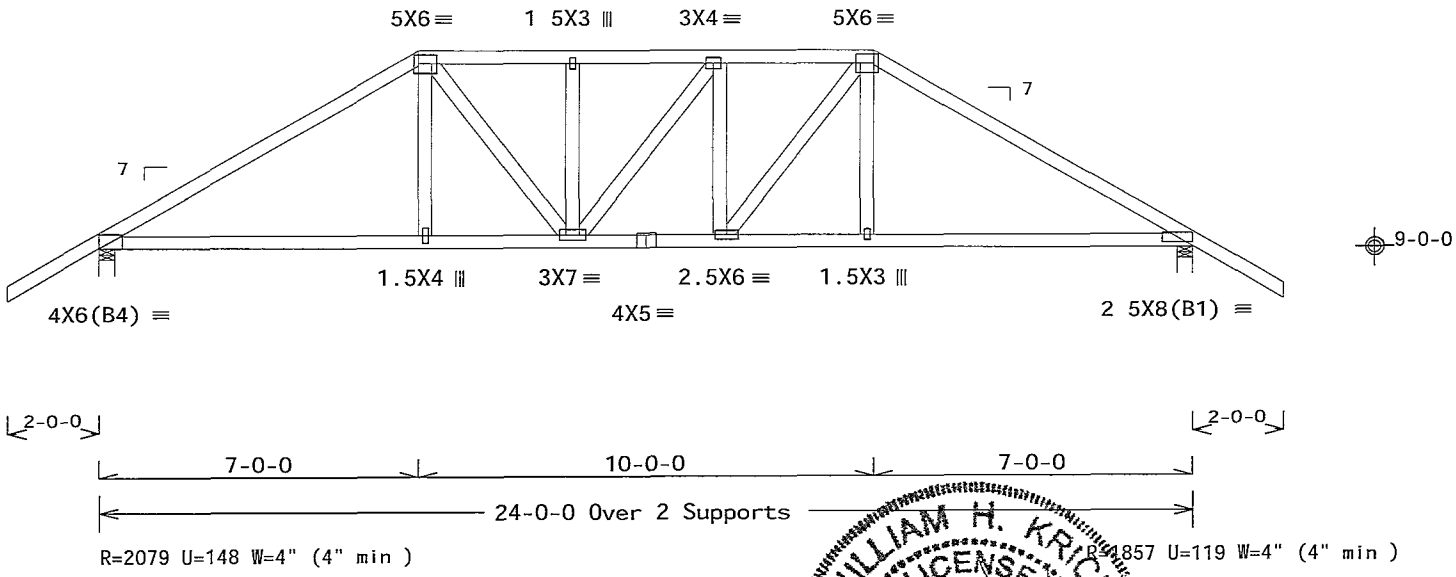

Design Crit: FBC2010Res/TPI-2007(STD)
FT/RT=10%(0%)/0(0)

PLT TYP. Wave

12.03.04.0326.14 QTY 1

FL/-/3/-/-/R/-

Scale =.25"/Ft.

WILLIAM H. KRICK LICENSE No. 70861 STATE OF FLORIDA PROFESSIONAL ENGINEER
04/19/2013

ALPINE
ITW Building Components Group Inc.
Haines City, FL 33844
FL COA #0 278

WARNING READ AND FOLLOW ALL NOTES ON THIS SHEET!
IMPORTANT FURNISH THIS DESIGN TO ALL CONTRACTORS INCLUDING INSTALLERS

Trusses require extreme care in fabr cating handl ng shipp ng installing and brac ng Refer to and follow the latest edition of BCSI (Bu ld ng Component Safety Information by TPI and WTCA) for recommended pract ces prior to perform ng these funct ons Installers shall prov de temporary brac ng per BCSI. Unless noted otherwise top chord shall have properly attached structural sheath ng and bottom chord shall have a properly attached rigid ceil ng Locat ons shown for permanent lateral restraint of webs shall have brac ng installed per BCSI sections B3 B7 or B10 as applicable

ITW Building Components Group Inc (ITWBCG) shall not be responsible for any deviat on from th s design any fa lure to bu ld the truss n conformance w th ANSI/TPI 1 or for handl ng shipp ng nstallat on bracing of trusses Apply plates to each face of truss and pos t on as shown above and on the Joint Details unless noted otherw se Refer to draw ngs 160A-Z for standard plate pos tions A seal on this drawing or cover page listing this draw ng ind cates acceptance of profess onal engineering respons bility solely for the design shown The su tab l ty and use of this des gn for any structure is the respons bility of the Bu lding Des gner per ANSI/TPI 1 Sec 2 For more nformation see This job s general notes page ITW BCG www twbcg com TPI www tpinst org WTCA www sbcindustry com ICC www iccsafe org

TC LL	20.0 PSF	REF	R487-- 40101
TC DL	7 0 PSF	DATE	04/19/13
BC DL	10.0 PSF	DRW	HCUSR487 13109051
BC LL	0.0 PSF	HC-ENG	WHK/WHK
TOT LD.	37 0 PSF	SEQN-	10817
DUR FAC.	1.25		
SPACING	24 0"	JREF-	1UVI487_Z05

THIS DWG PREPARED FROM COMPUTER INPUT (LOADS & DIMENSIONS) SUBMITTED BY TRUSS MFR

(13-097--BRYAN ZECHER Mowry Residence -- SW Dusk Glen Rd Lake City, FL 32024 - H7C 46'6"5 Flat Girder)

Top chord 2x6 SP_#2_12A T2, T3 2x6 SP_#1_Dense_12A
Bot chord 2x6 SP_SS_12A B2 2x6 SP M-26
B4 2x6 SP_#1_Dense_12A
Webs 2x4 SP_#3__12A
W1 W2, W4, W6 W14, W16 W18, W19 2x4 SP_#1_12A

Lumber grades designated with 12A use design values approved 1/5/2012 by ALSC

Brg blocks 0 131 x3 min nails

brg	x-loc	#blocks	length/blk	#nails/blk	wall plate
1	0 000	1	12	4	Rigid Surface

Brg block to be same size and species as chord
Refer to drawing CNNAILSP0109 for more information

(**) 1 plate(s) require special positioning Refer to scaled plate plot details for special positioning requirements

120 mph wind 15 00 ft mean hgt ASCE 7-10 CLOSED bldg not located within 9 00 ft from roof edge RISK CAT II EXP B wind TC DL=3 5 psf wind BC DL=5 0 psf GCpi(+/-)=0 18

Calculated horizontal deflection is 0 17 due to live load and 0 22 due to dead load

(a) Continuous lateral bracing equally spaced on member

Deflection meets L/240 live and L/180 total load Creep increase factor for dead load is 1 50

WARNING Furnish a copy of this DWG to the installation contractor Special care must be taken during handling shipping and installation of trusses See WARNING note below

Special loads
------(Lumber Dur Fac =1 25 / Plate Dur Fac =1 25)
TC- From 27 plf at 0 00 to 27 plf at 12 00
TC- From 27 plf at 12 00 to 27 plf at 24 00
TC- From 27 plf at 24 00 to 27 plf at 36 00
TC- From 27 plf at 36 00 to 27 plf at 46 53
BC- From 10 plf at 0 00 to 10 plf at 14 00
BC- From 10 plf at 14 00 to 10 plf at 26 00
BC- From 10 plf at 26 00 to 10 plf at 38 00
BC- From 10 plf at 38 00 to 10 plf at 46 53
TC- 165 34 lb Conc Load at 0 76 2 76 4 76 6 76
8 76 10 76 12 76 14 76 16 76 18 76 20 76 22 76 24 63
26 63 28 63 30 63 32 63 34 63 36 63 38 63 40 63 42 63
44 63
BC- 126 04 lb Conc Load at 0 76 2 76 4 76 6 76
8 76 10 76 12 76 14 76 16 76 18 76 20 76 22 76 24 63
26 63 28 63 30 63 32 63 34 63 36 63 38 63 40 63 42 63
44 63

Wind loads and reactions based on MWFRS

End verticals not exposed to wind pressure

Max JT VERT DEFL LL 0 78 DL 1 00 recommended camber 1 3/4

Bottom chord checked for 10 00 psf non-concurrent live load

Calculated vertical deflection is 0 78 due to live load and 1 00 due to dead load at X = 19-11-9

Truss must be installed as shown with top chord up

The TC of this truss shall be braced with attached spans at 24 0C in lieu of structural sheathing

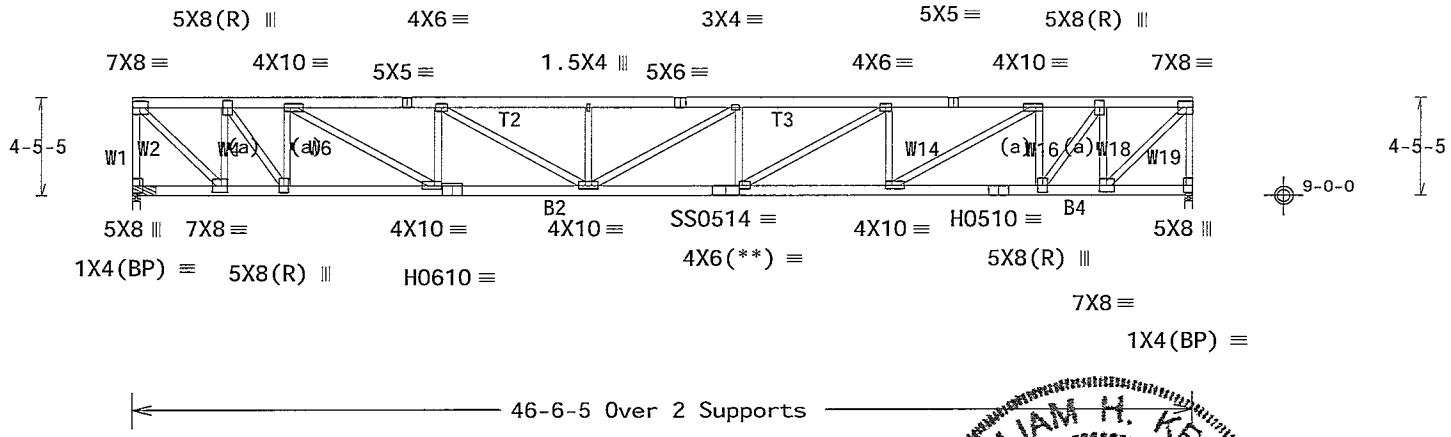

PLT TYP 20 Gauge HS,18 Gauge HS, Wave
Design Crit FBC2010Res/TPI-2007(STD) FT/RT=10%(0%)/0(0)
12.03 04.03.26 14 QTY 1
FL/-/3/-/-/R/-
Scale =.125"/Ft.

ALPINE
ITW Building Components Group Inc.
Haines City, FL 33844
FL COA #0 278

WARNING READ AND FOLLOW ALL NOTES ON THIS SHEET!
IMPORTANT FURNISH THIS DESIGN TO ALL CONTRACTORS INCLUDING INSTALLERS

Trusses require extreme care n fabr cating handling sh pp ng install ng and brac ng Rev ew Commentary and follow the latest edit on of BCSI (Bu lding Component Safety Informat on by TPI and WTCA) for recommended pract ces prior to perform ng these functions Installers shall prov de temporary brac ng per BCSI Unless noted otherwise top chord shall have properly attached structural sheathing and bottom chord shall have a properly attached r g d ce l ng Locat ons shown for permanent lateral restra nt of webs shall have bracing nstalled per BCSI sect ons B3 B7 or B10 as appl cable

ITW Bu ld ng Components Group Inc (ITWBCG) shall not be respons ble for any deviat on from th s dos any failure to build the truss n conformance with ANSI/TPI 1 or for handling sh pp ng installat on & brac ng of trusses Apply plates to each face of truss and position as shown above and on the Jo nt Deta ls unless noted otherwise Refer to drawings 160A-Z for standard plate posit ons A seal on th s draw ng or cover page l sting th s drawing nd cates acceptance of profess onal eng neer ng responsibil ty sololy for the des gn shown The suitabil ty and use of th s des gn for any structure s the respons b l ty of the Build ng Designer per ANSI/TPI 1 Sec 2 For more nformat on sec Th s job s general notes page ITW-BCG www twbcg com TPI www tp nst org WTCA www sbc ndustry com ICC www ccsafe org

WILLIAM H. KRUCK
LICENSED
No. 70861
STATE OF FLORIDA
PROFESSIONAL ENGINEER
04/19/2013

TC LL	20 0 PSF	REF	R487-- 40102
TC DL	7 0 PSF	DATE	04/19/13
BC DL	10 0 PSF	DRW	HCUSR487 13109052
BC LL	0.0 PSF	HC-ENG	WHK/WHK
TOT LD.	37.0 PSF	SEQN-	10812
DUR FAC	1 25		
SPACING	24 0"	JREF-	1UV1487_Z05

(13-097--BRYAN ZECHER Mowry Residence -- SW Dusk Glen Rd Lake City, FL 32024 - H7CS 28' Stepdown Hip Girder)

Top chord 2x4 SP_#1_12A
Bot chord 2x4 SP_#1_12A B5 B6 2x6 SP_#2_12A
Webs 2x4 SP_#3__12A W7 2x12 SP_#2_12A

Lumber grades designated with 12A use design values approved 1/5/2012 by ALSC

Special loads
------(Lumber Dur Fac =1 25 / Plate Dur Fac =1 25)
TC- From 56 plf at -2 00 to 56 plf at 7 00
TC- From 28 plf at 7 00 to 28 plf at 17 00
TC- From 28 plf at 17 00 to 28 plf at 28 00
BC- From 5 plf at -2 00 to 5 plf at 0 00
BC- From 20 plf at 0 00 to 20 plf at 2 83
BC- From 20 plf at 2 83 to 20 plf at 3 83
BC- From 20 plf at 3 83 to 20 plf at 7 02
BC- From 10 plf at 7 02 to 10 plf at 12 50
BC- From 10 plf at 12 50 to 10 plf at 13 50
BC- From 10 plf at 13 50 to 10 plf at 20 50
BC- From 10 plf at 20 50 to 10 plf at 28 00
TC- 231 95 lb Conc Load at 7 02
TC- 18 05 lb Conc Load at 9 06 11 06
TC- 116 99 lb Conc Load at 13 06
TC- 165 34 lb Conc Load at 15 06 17 06 19 06 21 06 23 06 25 06 27 06
BC- 607 00 lb Conc Load at 7 02
BC- 251 07 lb Conc Load at 9 06 11 06
BC- 144 53 lb Conc Load at 13 06
BC- 126 04 lb Conc Load at 15 06 17 06 19 06 21 06 23 06 25 06 27 06
BC- 1300 23 lb Conc Load at 19 44

2 COMPLETE TRUSSES REQUIRED

Nail Schedule 0 131 x3 min nails
Top Chord 1 Row @12 00 o c
Bot Chord 1 Row @12 00 o c
Webs 1 Row @ 4 o c
Use equal spacing between rows and stagger nails in each row to avoid splitting

120 mph wind 15 00 ft mean hgt ASCE 7-10 CLOSED bldg not located within 9 00 ft from roof edge RISK CAT II EXP B wind TC DL=3 5 psf wind BC DL=5 0 psf GCpi(+/-)=0 18

Wind loads and reactions based on MWFRS

Right end vertical not exposed to wind pressure

Calculated horizontal deflection is 0 13 due to live load and 0 20 due to dead load

(a) (2) #3 or better scab braces Same size & 80% length of web member Attach one to each face w/10d Box or Gun (0 128 x3 min)nails @ 6 OC

In lieu of structural panels use purlins to brace all flat TC @ 24 OC

Deflection meets L/240 live and L/180 total load Creep increase factor for dead load is 1 50

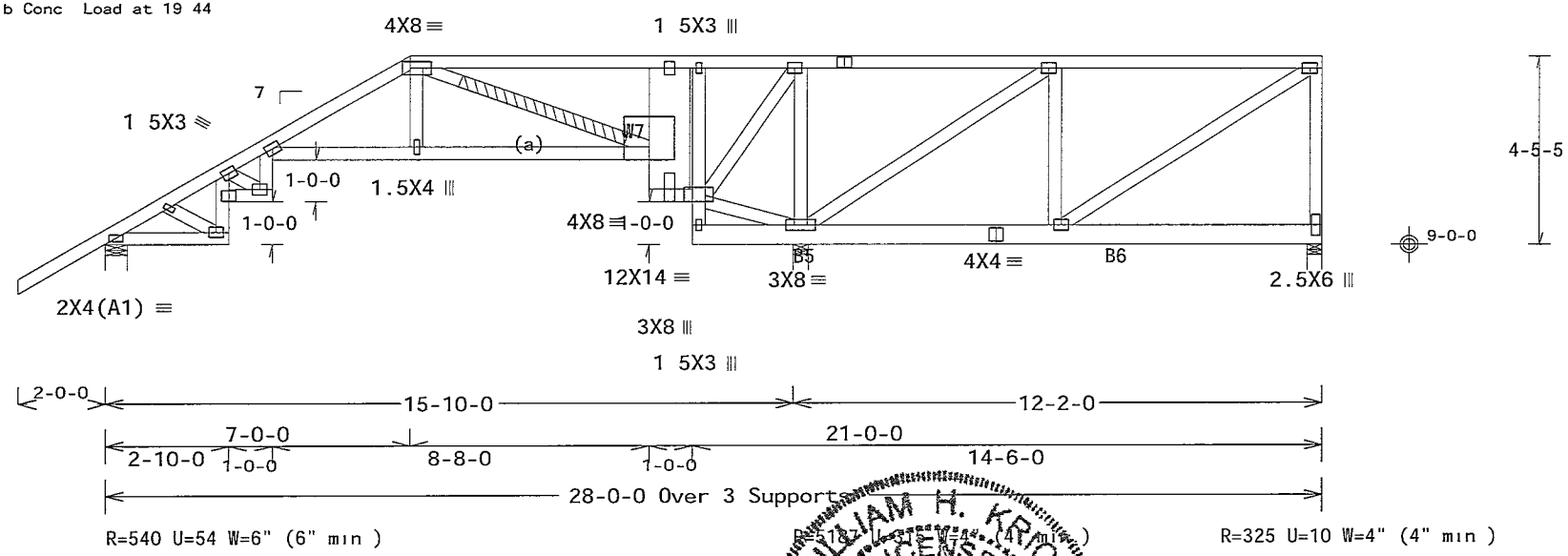

Note. All Plates Are 3X4 Except As Shown

Design Crit· FBC2010Res/TPI-2007(STD)

PLT TYP. Wave FT/RT=10%(0%)/0(0) 12.03 04.0326 14 QTY 1 FL/-/3/-/-/R/- Scale =.25"/Ft.

WILLIAM H. KRICK LICENSED No. 70861 STATE OF FLORIDA PROFESSIONAL ENGINEER

04/19/2013

ALPINE
ITW Building Components Group Inc.
Haines City, FL 33844
FL COA #0 278

WARNING READ AND FOLLOW ALL NOTES ON THIS SHEET!
IMPORTANT FURNISH THIS DESIGN TO ALL CONTRACTORS INCLUDING INSTALLERS

Trusses requ re extreme care n fabr cat ng hand l ng shipping nstalling and bracing Refer to and follow the latest ed tion of BCSI (Bu ld ng Component Safety Information by TPI and WTCA) for safety pract ces pr or to performing these funct ons Installers shall provide temporary bracing per BCSI Unless noted otherw se top chord shall have properly attached structural sheath ng and bottom chord shall have a properly attached r gid cei l ng Locat ons shown for permanent lateral restraint of webs shall have brac ng nstalled per BCSI sections B3 B7 or B10 as applicable

ITW Building Components Group Inc (ITWBCG) shall not be responsible for any deviat on from th s design or any failure to bu ld the truss n conformance with ANSI/TPI 1 or for handl ng sh pp ng nstallat on or brac ng of trusses Apply plates to each face of truss and position as shown above and on the Jo nt Details unless noted otherwise Refer to draw ngs 160A-Z for standard plate posit ons A seal on th s drawing or cover page l st ng th s drawing ndicates acceptance of profess onal eng neer ng responsibil ty solely for the des gn shown The suitabil ty and use of th s des gn for any structure s the respons b l ty of the Build ng Designer per ANSI/TPI 1 Sec 2 For more nformat on see Th s job s general notes page ITW-BCG www twbcg com TPI www tpinst org WTCA www sbc ndustry com ICC www ccsafe org

TC LL	20.0 PSF	REF	R487-- 40103
TC DL	7.0 PSF	DATE	04/19/13
BC DL	10 0 PSF	DRW	HCUSR487 13109053
BC LL	0 0 PSF	HC-ENG	WHK/WHK
TOT LD	37.0 PSF	SEQN-	10818
DUR.FAC	1.25		
SPACING	24 0"	JREF-	1UVI487_Z05

THIS DWG PREPARED FROM COMPUTER INPUT (LOADS & DIMENSIONS) SUBMITTED BY TRUSS MFR

(13-097--BRYAN ZECHER Mowry Residence -- SW Dusk Glen Rd Lake City, FL 32024 - H9A 28 Stepdown Hip)

Top chord 2x4 SP_#1_12A
Bot chord 2x4 SP_#1_12A
Webs 2x4 SP_#3__12A

Lumber grades designated with "12A" use design values approved 1/5/2012 by ALSC

In lieu of structural panels use purlins to brace all flat TC @ 24' OC

MWFRS loads based on trusses located at least 7 50 ft from roof edge

120 mph wind, 15 00 ft mean hgt, ASCE 7-10, CLOSED bldg, not located within 9 00 ft from roof edge, RISK CAT II, EXP B, wind TC DL=3 5 psf, wind BC DL=5 0 psf GCpi(+/-)=0 18

Wind loads and reactions based on MWFRS with additional C&C member design

Bottom chord checked for 10 00 psf non-concurrent live load

Deflection meets L/240 live and L/180 total load Creep increase factor for dead load is 1 50

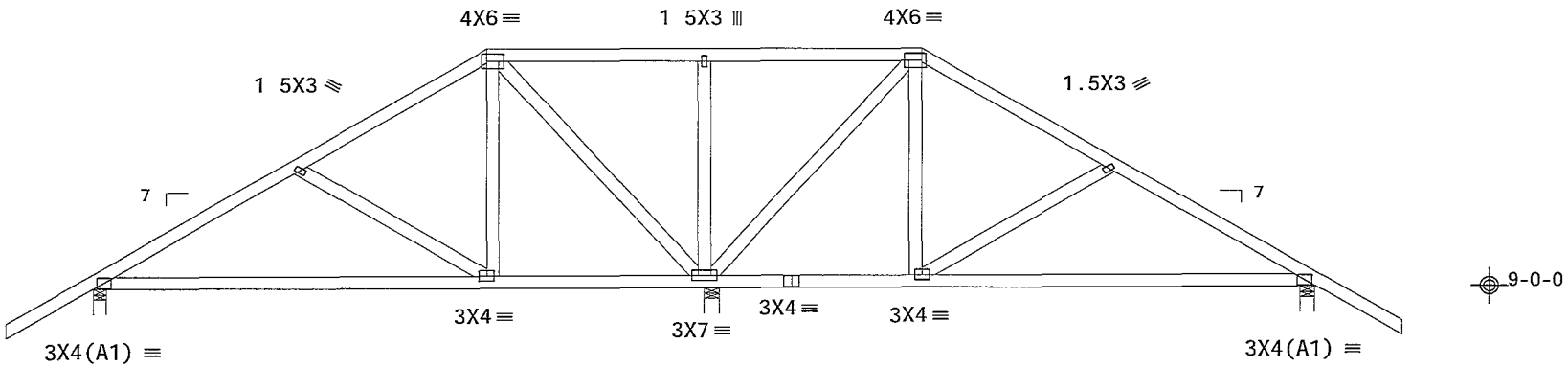

Design Crit FBC2010Res/TPI-2007(STD)
FT/RT=10%(0%)/0(0) 12 03 04 0826 14 1 QTY 1 FL/-/3/-/-/R/- Scale =.25"/Ft.

PLT TYP. Wave

ALPINE
ITW Building Components Group Inc.
Haines City, FL 33844
FL COA #0 278

WARNING READ AND FOLLOW ALL NOTES ON THIS SHEET!
IMPORTANT FURNISH THIS DESIGN TO ALL CONTRACTORS INCLUDING INSTALLERS

Trusses require extreme care n fabr cat ng hand ng sh pp ng nstall ng and brac ng Refer to and follow the latest edition of BCSI (Bu ld ng Component Safety Informat on by TPI and WTCA) for safety practices prior to perform ng these funct ons Installers shall provide temporary brac ng per BCSI Unless noted otherwise top chord shall have properly attached structural sheath ng and bottom chord shall have a properly attached rigid ce l ng Locat ons shown for permanent lateral restraint shall have brac ng nstalled per BCSI sections B3 B7 or B10 as appl cable

ITW Build ng Components Group Inc (ITWBCG) shall not be responsible for any deviat on from th s drawing any fa lure to bu ld the truss n conformance w th ANSI/TPI 1 or for handl ng shipp ng nstallation bracing of trusses Apply plates to each face of truss and pos t on as shown above and on the Joint Details unless noted otherw se Refer to draw ngs 160A-Z for standard plate pos tions A seal on this draw ng or cover page listing this draw ng indicates acceptance of professional engineering respons b lity solely for the design shown The suitab lity and use of this design for any structure is the respons bility of the Bu lding Designer per ANSI/TPI 1 Sec 2 For more information see Th s job s general notes page ITW BCG www itwbcg com TPI www tpinst org WTCA www sbcindustry com ICC www iccsafe org

WILLIAM H. KRICK LICENSE No. 70861 STATE OF FLORIDA PROFESSIONAL ENGINEER
04/19/2013

TC LL	20 0 PSF	REF	R487-- 40104
TC DL	7 0 PSF	DATE	04/19/13
BC DL	10 0 PSF	DRW	HCUSR487 13109054
BC LL	0.0 PSF	HC-ENG	WHK/WHK
TOT.LD.	37.0 PSF	SEQN-	10807
DUR.FAC.	1 25		
SPACING	24.0"	JREF-	1UV1487_Z05

(13-097--BRYAN ZECHER Mowry Residence -- SW Dusk Glen Rd Lake City, FL 32024 - H9B 24' Stepdown Hip)

Top chord 2x4 SP_#1_12A
Bot chord 2x4 SP_#1_12A
Webs 2x4 SP_#3__12A

Lumber grades designated with '12A' use design values approved 1/5/2012 by ALSC

In lieu of structural panels use purlins to brace all flat TC @ 24' OC

MWFRS loads based on trusses located at least 7 50 ft from roof edge

120 mph wind, 15 00 ft mean hgt, ASCE 7-10, CLOSED bldg, not located within 9 00 ft from roof edge, RISK CAT II, EXP B, wind TC DL=3 5 psf, wind BC DL=5 0 psf GCpi(+/-)=0 18

Wind loads and reactions based on MWFRS with additional C&C member design

Bottom chord checked for 10 00 psf non-concurrent live load

Deflection meets L/240 live and L/180 total load Creep increase factor for dead load is 1 50

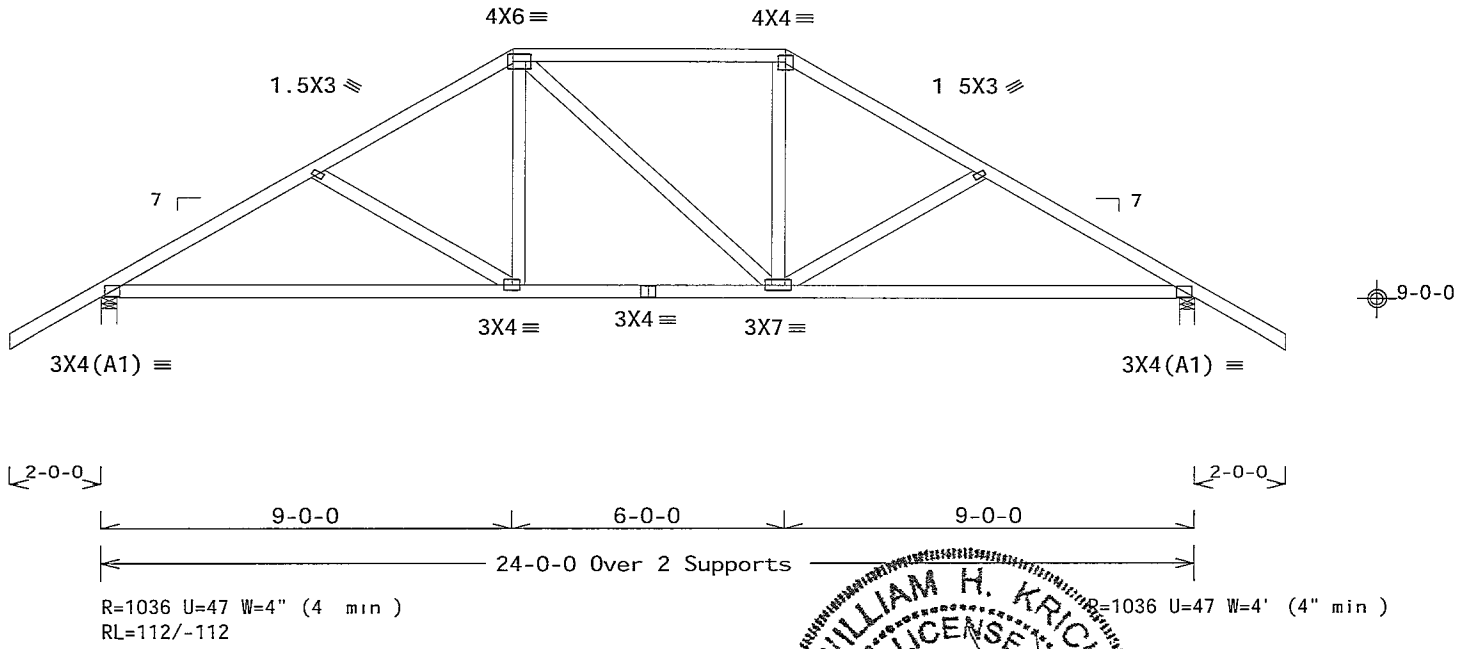

Design Crit. FBC2010Res/TPI-2007(STD)

PLT TYP Wave FT/RT=10%(0%)/0(0) 12.03.04 0326 14 QTY 2 FL/-/3/-/-/R/- Scale =.25"/Ft

ALPINE
ITW Building Components Group Inc.
Hames City, FL 33844
FL COA #0 278

WARNING READ AND FOLLOW ALL NOTES ON THIS SHEET!
IMPORTANT FURNISH THIS DESIGN TO ALL CONTRACTORS INCLUDING INSTALLERS

Trusses requ re extreme care n fabricating handling sh pping installing and brac ng Refer to and follow the latest edit on of BCSI (Building Component Safety Informat on by TPI and WTCA) for safety practices prior to perform ng these functions Installers shall prov de temporary brac ng per BCSI Unless noted otherwise top chord shall have properly attached structural sheathing and bottom chord shall have a properly attached r g d ce ling Locations shown for permanent lateral restra nt of webs shall have bracing installed per BCSI sect ons B3 B7 or B10 as appl cable

ITW Bu ld ng Components Group Inc (ITWBCG) shall not be responsible for any deviat on from th designs any failure to build the truss n conformance with ANSI/TPI 1 or for handling shipp ng installation and brac ng of trusses Apply plates to each face of truss and position as shown above and on the Jo nt Deta ls unless noted otherwise Refer to drawings 160A-Z for standard plate posit ons A seal on th s drawing or cover page l sting this drawing ndicates acceptance of professional eng neer ng responsibil ty solely for the design shown The suitabil ty and use of this design for any structure s the respons b l ty of the Build ng Designer per ANSI/TPI 1 Sec 2 For more information see This job s general notes page ITW-BCG www twbcg com TPI www tp nst org WTCA www sbcindustry com ICC www ccsafe org

WILLIAM H. KRICK LICENSE No 70861 STATE OF FLORIDA PROFESSIONAL ENGINEER
04/19/2013

TC LL	20 0 PSF	REF	R487-- 40105
TC DL	7 0 PSF	DATE	04/19/13
BC DL	10.0 PSF	DRW	HCUSR487 13109055
BC LL	0.0 PSF	HC-ENG	WHK/WHK
TOT LD.	37.0 PSF	SEQN-	10808
DUR FAC	1.25		
SPACING	24.0"	JREF-	1UV1487_Z05

(13-097--BRYAN ZECHER Mowry Residence -- SW Dusk Glen Rd Lake City, FL 32024 - H9C 46 6 5 Flat)

Top chord 2x4 SP_#1_12A
Bot chord 2x4 SP_#1_12A
Webs 2x4 SP_#3__12A

Lumber grades designated with '12A' use design values approved 1/5/2012 by ALSC

End verticals not exposed to wind pressure

(a) Continuous lateral bracing equally spaced on member

Deflection meets L/240 live and L/180 total load Creep increase factor for dead load is 1 50

Truss must be installed as shown with top chord up

120 mph wind, 15 00 ft mean hgt, ASCE 7-10, CLOSED bldg, not located within 6 50 ft from roof edge, RISK CAT II, EXP B, wind TC DL=3 5 psf, wind BC DL=5 0 psf GCpi(+/-)=0 18

Wind loads and reactions based on MWFRS with additional C&C member design

Max JT VERT DEFL LL 0 32" DL 0 41" recommended camber 3/4"

Bottom chord checked for 10 00 psf non-concurrent live load

WARNING Furnish a copy of this DWG to the installation contractor Special care must be taken during handling, shipping and installation of trusses See "WARNING" note below

MWFRS loads based on trusses located at least 7 50 ft from roof edge

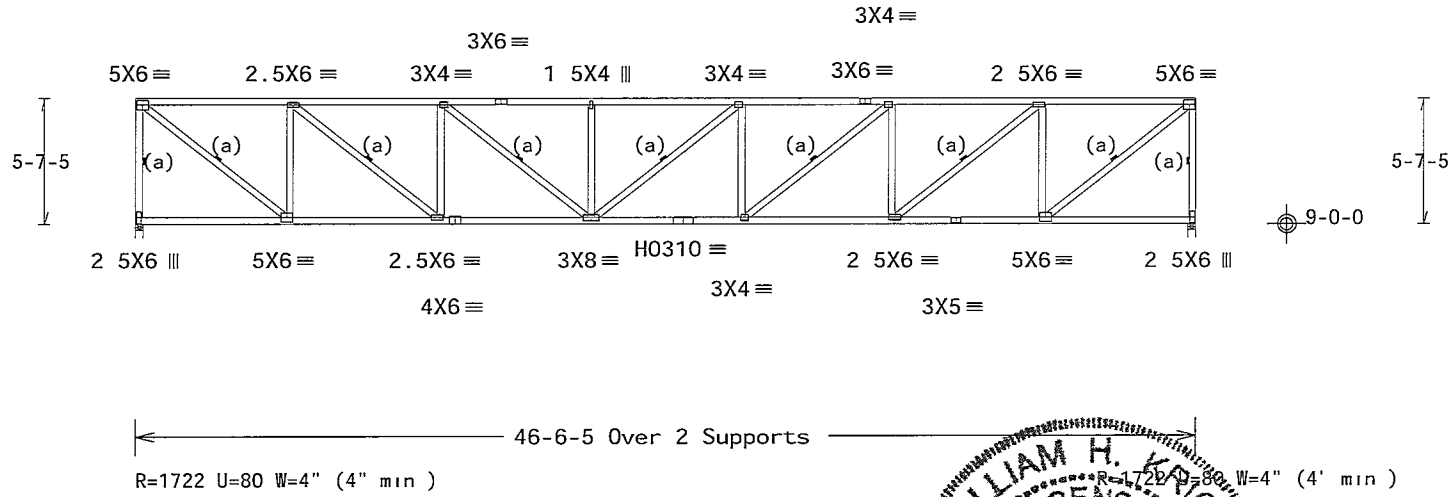

Design Crit: FBC2010Res/TPI-2007(STD)

PLT TYP 20 Gauge HS,Wave FT/RT=10%(0%)/0(0) 12 03 04 0326 14 QTY 1 FL/-/3/-/-/R/- Scale =.125"/Ft

ALPINE
ITW Building Components Group Inc.
Haines City, FL 33844
FL COA #0 278

WARNING READ AND FOLLOW ALL NOTES ON THIS SHEET!
IMPORTANT FURNISH THIS DESIGN TO ALL CONTRACTORS INCLUDING INSTALLERS

Trusses requ re extreme care n fabricating handling shipping installing and brac ng Refer to and follow the latest edit on of BCSI (Bu ld ng Component Safety Informat on by TPI and WTCA) for safety practices prior to perform ng these functions Installers shall prov de temporary brac ng per BCSI Unless noted otherwise top chord shall have properly attached structural sheathing and bottom chord shall have a properly attached r g d ce l ng Locations shown for permanent lateral restra nt of webs shall have bracing installed per BCSI sections B3 B7 or B10 as applicable

ITW Bu ld ng Components Group Inc (ITWBCG) shall not be respons ble for any dev ation from this design any failure to build the truss in conformance with ANSI/TPI 1 or for handling sh pping installation bracing of trusses Apply plates to each face of truss and position as shown above and on the Joint Deta ls unless noted otherwise Refer to drawings 160A-Z for standard plate positions A seal on this draw ng or cover page listing this drawing indicates acceptance of professional engineering responsibil ty solely for the design shown The suitab lity and use of this design for any structure is the respons b l ty of the Building Designer per ANSI/TPI 1 Sec 2 For more information see Th s job s general notes page ITW-BCG www itwbcg com TPI www tpinst org WTCA www sbcindustry com ICC www ccsafe org

WILLIAM H. KRICK LICENSE No. 70861 STATE OF FLORIDA PROFESSIONAL ENGINEER
04/19/2013

TC LL	20.0 PSF	REF	R487-- 40106
TC DL	7.0 PSF	DATE	04/19/13
BC DL	10.0 PSF	DRW	HCUSR487 13109056
BC LL	0.0 PSF	HC-ENG	WHK/WHK
TOT.LD	37.0 PSF	SEQN-	10809
DUR.FAC.	1.25		
SPACING	24 0"	JREF-	1UV1487_Z05

THIS DWG PREPARED FROM COMPUTER INPUT (LOADS & DIMENSIONS) SUBMITTED BY TRUSS MFR

(13-097--BRYAN ZECHER Mowry Residence -- SW Dusk Glen Rd Lake City, FL 32024 - H9CS 28' Stepdown Hip)

Top chord 2x4 SP_#1_12A T1 2x4 SP 2850f-2 3E
Bot chord 2x4 SP_#1_12A
Webs 2x4 SP_#3__12A W10 2x4 SP_#1_12A

Lumber grades designated with "12A" use design values approved 1/5/2012 by ALSC

Calculated horizontal deflection is 0 16" due to live load and 0 35" due to dead load

(b) (2) #3 or better scab braces Same size & 80% length of web member Attach one to each face w/10d Box or Gun (0 128"x3",min)nails @ 6" OC

Bottom chord checked for 10 00 psf non-concurrent live load

MWFRS loads based on trusses located at least 7 50 ft from roof edge

120 mph wind, 15 00 ft mean hgt, ASCE 7-10, CLOSED bldg, not located within 9 00 ft from roof edge, RISK CAT II, EXP B, wind TC DL=3 5 psf, wind BC DL=5 0 psf GCpi(+/-)=0 18

Wind loads and reactions based on MWFRS with additional C&C member design

Right end vertical not exposed to wind pressure

(a) #3 or better scab brace Same size & 80% length of web member Attach with 10d Box or Gun (0 128"x3",min)nails @ 6" OC

In lieu of structural panels use purlins to brace all flat TC @ 24" OC

Deflection meets L/240 live and L/180 total load Creep increase factor for dead load is 1 50

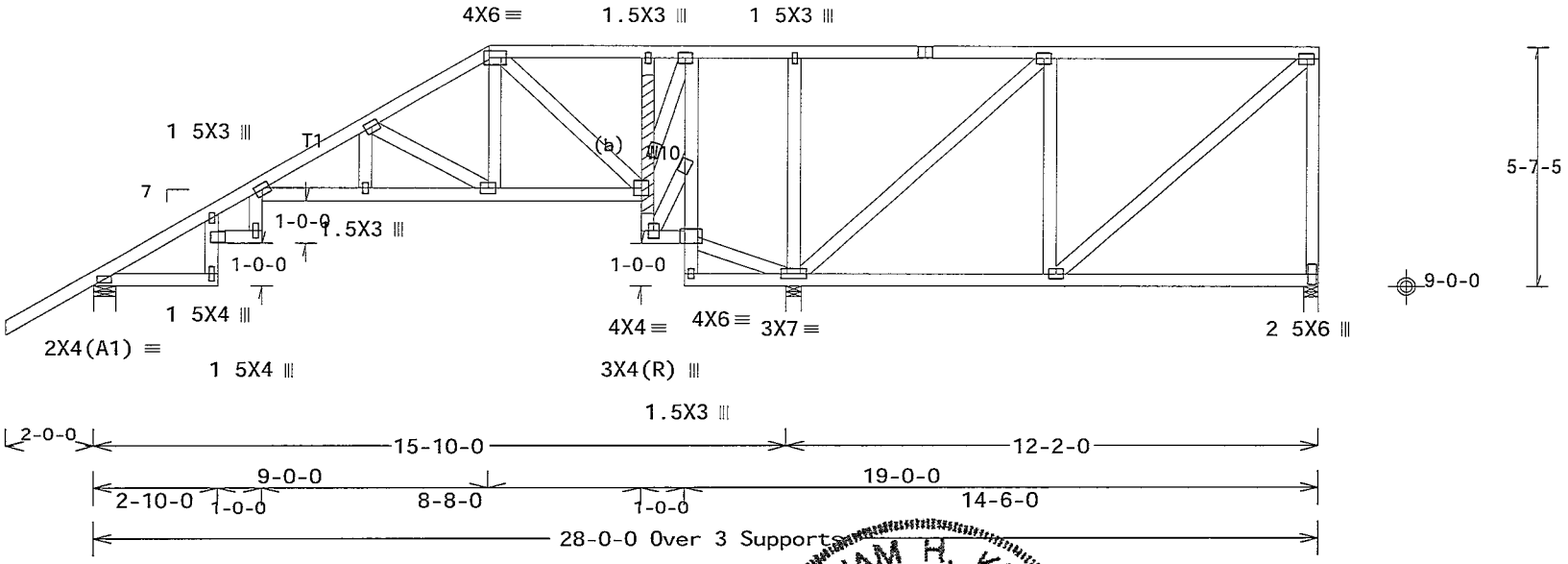

Note. All Plates Are 3X4 Except As Shown.

Design Crit FBC2010Res/TPI-2007(STD)

PLT TYP Wave FT/RT=10%(0%)/0(0) 12 03.04.0826.14 QTY 1 FL/-/3/-/-/R/- Scale =.25"/Ft

ALPINE
ITW Building Components Group Inc.
Haines City, FL 33844
FL COA #0 278

WARNING READ AND FOLLOW ALL NOTES ON THIS SHEET!
IMPORTANT FURNISH THIS DESIGN TO ALL CONTRACTORS INCLUDING INSTALLERS

Trusses require extreme care in fabr cat ng hand ng sh pp ng nstall ng and bracing Refer to and follow the latest edition of BCSI (Bu ld ng Component Safety Information by TPI and WTCA) for safety pract ces pr or to performing these funct ons Installers shall provide temporary bracing per BCSI Unless noted otherwise top chord shall have properly attached structural sheath ng and bottom chord shall have a properly attached rigid ceiling Locat ons shown for permanent lateral restraint of webs shall have brac ng nstalled per BCSI sections B3 B7 or B10 as applicable

ITW Bu ldng Components Group Inc (ITWBCG) shall not be responsible for any dev at on from th s design or any fa lure to bu ld the truss in conformance w th ANSI/TPI 1 or for handl ng sh pp ng nstallation brac ng of trusses Apply plates to each face of truss and pos t on as shown above and on the Joint Deta ls unless noted otherw se Refer to draw ngs 160A-Z for standard plate pos tions A seal on this draw ng or cover page listing this draw ng ind cates acceptance of professional engineering respons b l ty solely for the des gn shown The su tab lity and use of this des gn for any structure is the respons bility of the Bu ldng Des gner per ANSI/TPI 1 Sec 2 For more informat on see Th s job s general notes page ITW BCG www itwbcg com TPI www tpinst org WTCA www sbcindustry com ICC www ccsafe org

WILLIAM H. KRICK LICENSE No. 70861 STATE OF FLORIDA PROFESSIONAL ENGINEER
04/19/2013

TC LL	20.0 PSF	REF	R487-- 40107
TC DL	7 0 PSF	DATE	04/19/13
BC DL	10.0 PSF	DRW	HCUSR487 13109057
BC LL	0 0 PSF	HC-ENG	WHK/WHK
TOT LD	37.0 PSF	SEQN-	10810
DUR FAC	1.25		
SPACING	24 0"	JREF-	1UV1487_Z05

THIS DWG PREPARED FROM COMPUTER INPUT (LOADS & DIMENSIONS) SUBMITTED BY TRUSS MFR

(13-097--BRYAN ZECHER Mowry Residence -- SW Dusk Glen Rd Lake City, FL 32024 - HJ7 9'10 13 Hip Jack Girder)

Top chord 2x4 SP_#1_12A
Bot chord 2x4 SP_#1_12A
Webs 2x4 SP_#3__12A

Lumber grades designated with "12A' use design values approved 1/5/2012 by ALSC

120 mph wind, 15 00 ft mean hgt, ASCE 7-10, CLOSED bldg, not located within 9 00 ft from roof edge, RISK CAT II, EXP B, wind TC DL=3 5 psf, wind BC DL=5 0 psf GCpi(+/-)=0 18

Wind loads and reactions based on MWFRS

Bottom chord checked for 10 00 psf non-concurrent live load

Provide (2) 16d common nails(0 162 x3 5), toe nailed at Top chord
Provide (2) 16d common nails(0 162'x3 5), toe nailed at Bot chord

Special loads
------(Lumber Dur Fac =1 25 / Plate Dur Fac =1 25)
TC- From 0 plf at -2 83 to 55 plf at 0 00
TC- From 2 plf at 0 00 to 2 plf at 9 90
BC- From 0 plf at -2 83 to 4 plf at 0 00
BC- From 2 plf at 0 00 to 2 plf at 9 90
TC- -69 36 lb Conc Load at 1 48
TC- 87 65 lb Conc Load at 4 31
TC- 217 92 lb Conc Load at 7 13
BC- 4 18 lb Conc Load at 1 48
BC- 94 63 lb Conc Load at 4 31
BC- 174 58 lb Conc Load at 7 13

Deflection meets L/240 live and L/180 total load Creep increase factor for dead load is 1 50

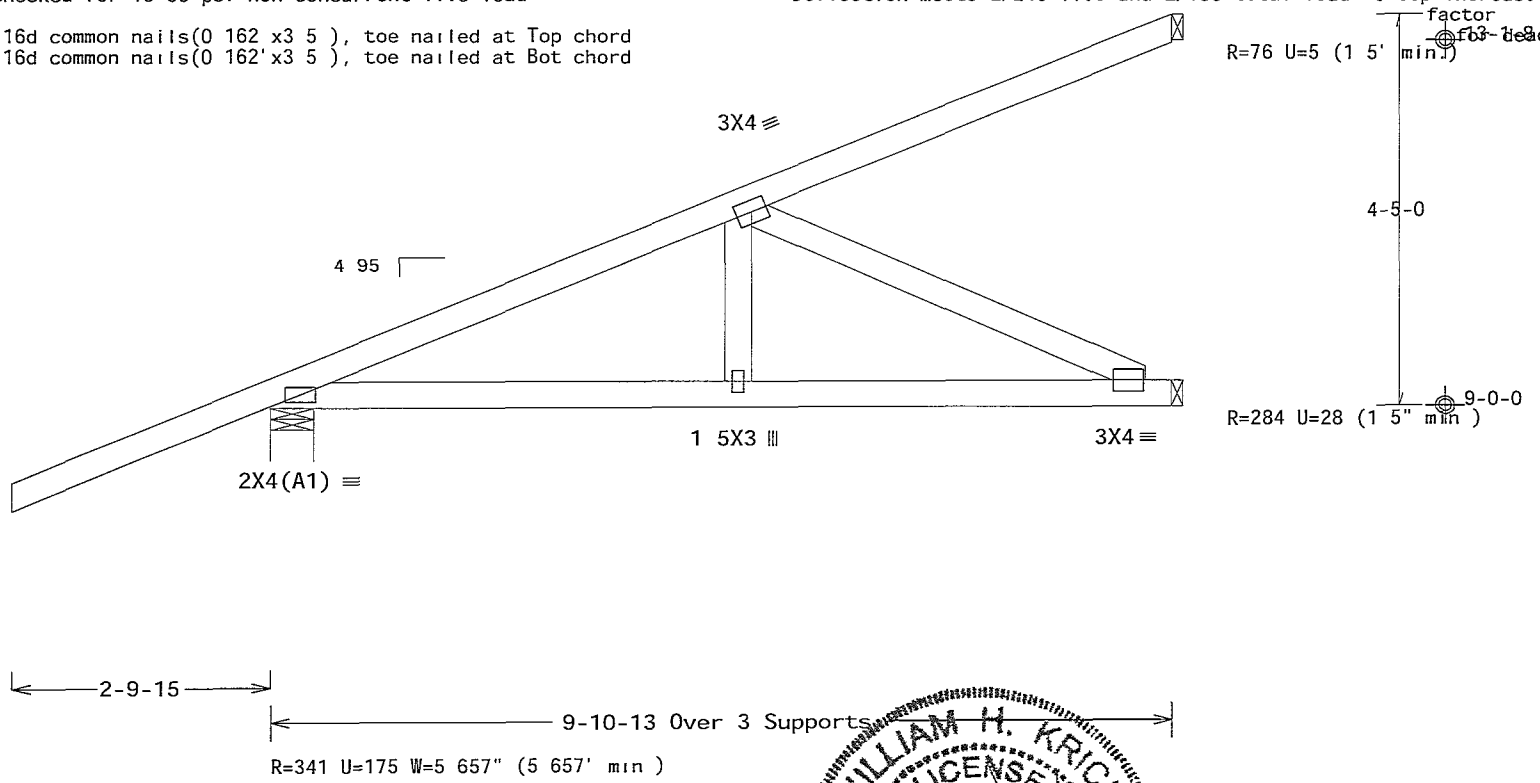

Design Crit· FBC2010Res/TPI-2007(STD) 12.03 04 0336 14 FL/-/3/-/-/R/- Scale =.5"/Ft
FT/RT=10%(0%)/0(0)

PLT TYP Wave

WILLIAM H. KRICK LICENSE No. 70861 STATE OF FLORIDA PROFESSIONAL ENGINEER 04/19/2013

ALPINE
ITW Building Components Group Inc.
Haines City, FL 33844
FL COA #0 278

WARNING READ AND FOLLOW ALL NOTES ON THIS SHEET!
IMPORTANT FURNISH THIS DESIGN TO ALL CONTRACTORS INCLUDING INSTALLERS

Trusses requ re extreme care n fabr cating handling sh pp ng install ng and brac ng Refer to and follow the latest edit on of BCSI (Bu lding Component Safety Informat on by TPI and WTCA) for recommended pract ces prior to perform ng these functions Installers shall prov de temporary bracing per BCSI. Unless noted otherwise top chord shall have properly attached structural sheath ng and bottom chord shall have a properly attached r gid ce l ng Locat ons shown for permanent lateral restra nt of webs shall have brac ng nstalled per BCSI sect ons B3 B7 or B10 as appl cable

ITW Build ng Components Group Inc (ITWBCG) shall not be responsible for any deviat on from th s design, any failure to bu ld the truss n conformance with ANSI/TPI 1 or for handling shipp ng nstallat on & brac ng of trusses Apply plates to each face of truss and position as shown above and on the Jo nt Details unless noted otherwise Refer to draw ngs 160A-Z for standard plate posit ons A seal on th s drawing or cover page I st ng th s drawing nd cates acceptance of profess onal engineer ng respons bility solely for the design shown The suitabil ty and use of this des gn for any structure is the responsibility of the Bu ld ng Des gner per ANSI/TPI 1 Sec 2 For more nformation see This job s general notes page ITW BCG www twbcg com TPI www tp nst org WTCA www sbc ndustry com ICC www iccsafe org

TC LL	20.0 PSF	REF	R487-- 40108
TC DL	7 0 PSF	DATE	04/19/13
BC DL	10 0 PSF	DRW	HCUSR487 13109058
BC LL	0 0 PSF	HC-ENG	WHK/WHK
TOT LD	37.0 PSF	SEQN-	10813
DUR FAC	1 25		
SPACING	24 0"	JREF-	1UVI487_Z05

(13-097--BRYAN ZECHER Mowry Residence -- SW Dusk Glen Rd Lake City, FL 32024 - HJ7T 9 10 13 Hip Jack Girder)

Top chord 2x4 SP_#1_12A
Bot chord 2x4 SP_#1_12A
Webs 2x4 SP_#3__12A

Lumber grades designated with '12A" use design values approved 1/5/2012 by ALSC

120 mph wind, 15 00 ft mean hgt, ASCE 7-10, CLOSED bldg, Located anywhere in roof, RISK CAT II, EXP B, wind TC DL=3 5 psf, wind BC DL=5 0 psf GCpi(+/-)=0 18

Hipjack supports 7-0-0 setback jacks with no webs

Provide (2) 16d common nails(0 162"x3 5"), toe nailed at Top chord
Provide (3) 16d common nails(0 162"x3 5"), toe nailed at Bot chord

2 COMPLETE TRUSSES REQUIRED

Nail Schedule 0 131 x3 , min nails
Top Chord 1 Row @12 00" o c
Bot Chord 1 Row @12 00 o c
Webs 1 Row @ 4' o c
Use equal spacing between rows and stagger nails in each row to avoid splitting

Wind loads and reactions based on MWFRS

Deflection meets L/240 live and L/180 total load Creep increase factor for dead load is 1 50

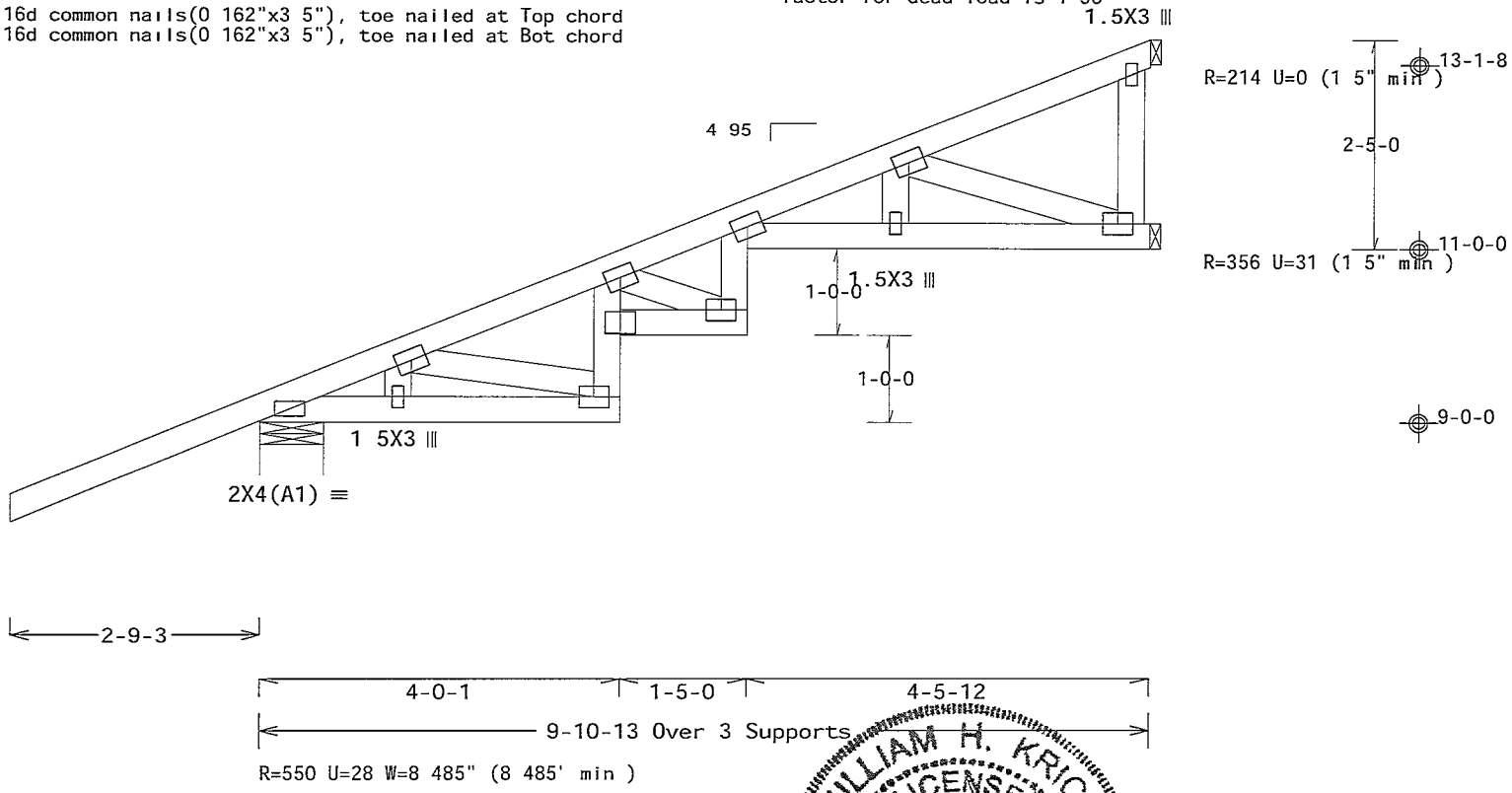

Note: All Plates Are 3X4 Except As Shown.

Design Crit· FBC2010Res/TPI-2007(STD)

PLT TYP Wave FT/RT=10%(0%)/0(0) 12 03.04.0326.14 QTY 1 FL/-/3/-/-/R/- Scale =.5"/Ft.

WILLIAM H. KRICK LICENSE No. 70861 STATE OF FLORIDA PROFESSIONAL ENGINEER
04/19/2013

ALPINE
ITW Building Components Group Inc.
Haines City FL 33844
FL COA #0 278

WARNING READ AND FOLLOW ALL NOTES ON THIS SHEET!
IMPORTANT FURNISH THIS DESIGN TO ALL CONTRACTORS INCLUDING INSTALLERS

Trusses require extreme care n fabr cating handling sh pp ng install ng and brac ng Refer to and follow the latest edition of BCSI (Bu lding Component Safety Informat on by TPI and WTCA) for general practices prior to perform ng these functions Installers shall prov de temporary brac ng per BCSI Unless noted otherwise top chord shall have properly attached structural sheathing and bottom chord shall have a properly attached r g d ce l ng Locations shown for permanent lateral restra nt of webs shall have bracing installed per BCSI sect ons B3 B7 or B10 as appl cable

ITW Bu ld ng Components Group Inc (ITWBCG) shall not be responsible for any dev ation from th s design any failure to build the truss in conformance with ANSI/TPI 1 or for handling shipping installation brac ng of trusses Apply plates to each face of truss and position as shown above and on the Joint Details unless noted otherwise Refer to drawings 160A-Z for standard plate positions A seal on th s drawing or cover page l sting th s drawing indicates acceptance of profess onal engineering responsibility solely for the des gn shown The suitabil ty and use of th s des gn for any structure s the responsib l ty of the Build ng Designer per ANSI/TPI 1 Sec 2 For more nformat on see This job s general notes page ITW-BCG www twbcg com TPI www tp nst org WTCA www sbc ndustry com ICC www ccsafe org

TC LL	20.0 PSF	REF	R487-- 40109
TC DL	7.0 PSF	DATE	04/19/13
BC DL	10.0 PSF	DRW	HCUSR487 13109059
BC LL	0.0 PSF	HC-ENG	WHK/WHK
TOT.LD.	37.0 PSF	SEQN-	10814
DUR.FAC.	1 25		
SPACING	24.0"	JREF-	1UVI487_Z05

CLB WEB BRACE SUBSTITUTION

THIS DETAIL IS TO BE USED WHEN CONTINUOUS LATERAL BRACING (CLB) IS SPECIFIED ON A TRUSS DESIGN BUT AN ALTERNATIVE WEB BRACING METHOD IS DESIRED

NOTES

THIS DETAIL IS ONLY APPLICABLE FOR CHANGING THE SPECIFIED CLB SHOWN ON SINGLE PLY SEALED DESIGNS TO T BRACING OR SCAB BRACING

ALTERNATIVE BRACING SPECIFIED IN CHART BELOW MAY BE CONSERVATIVE FOR MINIMUM ALTERNATIVE BRACING RE-RUN DESIGN WITH APPROPRIATE BRACING

WEB MEMBER SIZE	PECIFIED CLB BPACING	ALTERNATIVE BRACING T OR L BRACE	SCAB BRACE
2X3 OR 2X4	1 ROW	2X4	1 2X4
2X3 OR 2X4	2 ROWS	2X6	2 2X4
2X6	1 ROW	2X4	1-2X6
2X6	2 ROW	2X6	2 2X4(*)
2X8	1 ROW	2X6	1 2X8
2X8	2 ROW	2X6	2 2X6(*)

T BRACE L BRACE AND SCAB BRACE TO BE SAME SPECIES AND GRADE OR BETTER THAN WEB MEMBER UNLESS SPECIFIED OTHERWISE ON ENGINEER'S SEALED DESIGN

(*) CENTER SCAB ON WIDE FACE OF WEB APPLY (1) SCAB TO EACH FACE OF WEB

T-BRACING OR L-BRACING

APPLY TO EITHER SIDE OF WEB NARROW FACE
ATTACH WITH 10d BOX OR GUN
(0.128 x 3 MIN) NAILS
AT 6" OC
BRACE IS A
MINIMUM 80% OF WEB
MEMBER LENGTH

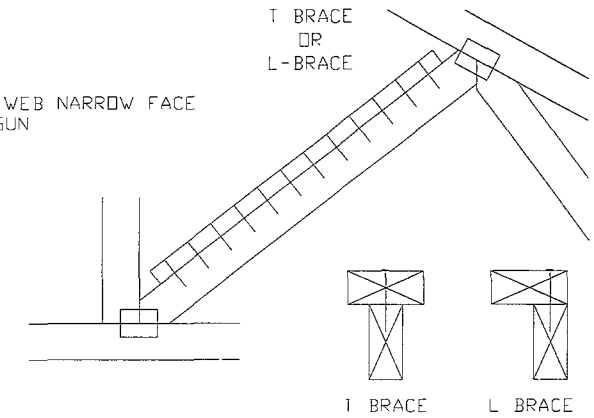

SCAB BRACING

APPLY SCAB(S) TO WIDE FACE OF WEB
NO MORE THAN (1) SCAB PER FACE
ATTACH WITH 10d BOX OR GUN
(0.128 x 3 MIN) NAILS
AT 6" OC
BPACE IS A MINIMUM
80% OF WEB MEMBER LENGTH

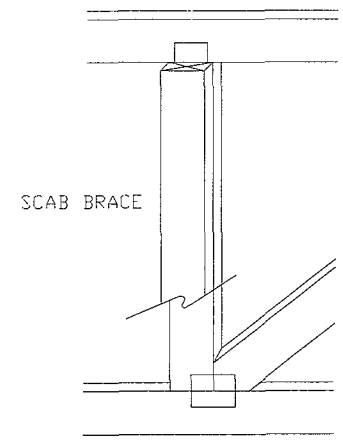

WILLIAM H. KRICK
LICENSE
No. 70861
STATE OF FLORIDA
PROFESSIONAL ENGINEER
04/19/2013
Apr 19 '13

TW
Building Components Group Inc.
Earth City MO 63045

WARNING READ AND FOLLOW ALL NOTES ON THIS SHEE
Trusses require extreme care n fabricating handling shipping, installing and bracing. Refe [illegible] fo ow BCSI (Building Component Safety Information by TPI and WTCA) for safety practices nor to performing these functions. Instalers shal provide temporary bracing per BCSI Unless noted otherwise top chord shol have properly attached structura pone s and bottom chord sha have properly attached rigid ce ing. Locations shown for permanent ateral restraint of webs sh [illegible] bracing insta led per BCSI sections B3 & B7 See this job's genera notes page for more inf [illegible]

IMPORTANT FURNISH COPY OF THIS DESIGN O INSTALLATION CONTRACTOR
ITW Building Components Group Inc ITWBCG shal not be responsible for any deviation from this design any a ure to build the truss in conformance with TPI or fabr cating handling shipping, insta ling & b acing of trusses ITWBCG connector plates are made of 20/18/16GA (W,H/S/K) ASTM A653 grade 37/40/60 (K/W/H,S) ga v steel Apply plates to each face of truss positoned as shown above and or Joint Details
A sea on this drawing or cover page ndicates acceptance and professiona engineer ng responsibility sa e y for the truss component design shown The suitability and use o this component for any bu ding the respo sibi ty o the Bu ding Designer per ANSI/TPI 1 Sec. 2
I W BCG www twbcg com TPI www pinst com WTCA www sbc ndustry com ICC www csafe org

TC LL	PSF	REF	CLB SUBST
TC DL	PSF	DATE	1/1/09
BC DL	PSF	DRWG	BRCLBSUB0109
BC LL	PSF		
TOT LD	PSF		
DUR FAC			
SPACING			

140 PIGGYBACK DETAIL

140 MPH WIND 30.00 FT MEAN HGT ASCE 7 02 OR ASCE
7 05 PARTIALLY ENCLOSED BLDG LOCATED ANYWHERE IN ROOF CAT II
EXP C WIND DL 5.0 P F (MIN Kzt 1.00

MAXIMUM TRUSS SPACING IS 24 OC
DETAIL IS NOT APPLICABLE IF CAP SUPPORTS ADDITIONAL LOADS SUCH AS CUPOLA STEEPLE CHIMNEY OR DRAG STRUT LOADS

NOTE TOP CHORDS OF TRUSSE UPPORTING PIGGYBACK CAP TRUSSES MUST BE ADEQUATELY BRACED BY SHEATHING OR PURLINS THE BUILDING ENGINEER OF RECORD SHALL PROVIDE DIAGONAL BRACING OR ANY OTHER UITABLE ANCHORAGE TO PERMANENTLY RESTRAIN PURLINS AND LATERAL BRACING FOR OUT OF PLANE LOADS OVER GABLE ENDS

** REFER TO ENGINEER'S SEALED TRUSS DESIGN DRAWING FOR PIGGYBACK AND BASE TRUSS SPECIFICATIONS

PIGGYBACK CAP TRUSS SLANT NAILED TO ALL TOP CHORD PURLIN BRACING WITH (2 16d BOX NAILS (0.135 x3.5) AND SECURE TOP CHORD WITH X4 #3 GRADE SCAB (1 IDE ONLY AT EACH END) ATTACHED WITH 2 ROW OF 10d BOX NAILS (0.128 x3") AT 4 O

++ FLAT TOP CHORD PURLINS REQUIRED AT BOTH ENDS AND AT A MAXIMUM OF 24 INTERVAL UNLESS OTHERWISE NOTED ON BASE TRUSS DESIGN DRAWING ATTACH PURLIN BRACING TO THE FLAT TOP CHORD U INC A MINIMUM OF (2) 16d BOX NAILS (0.135 x3.5)

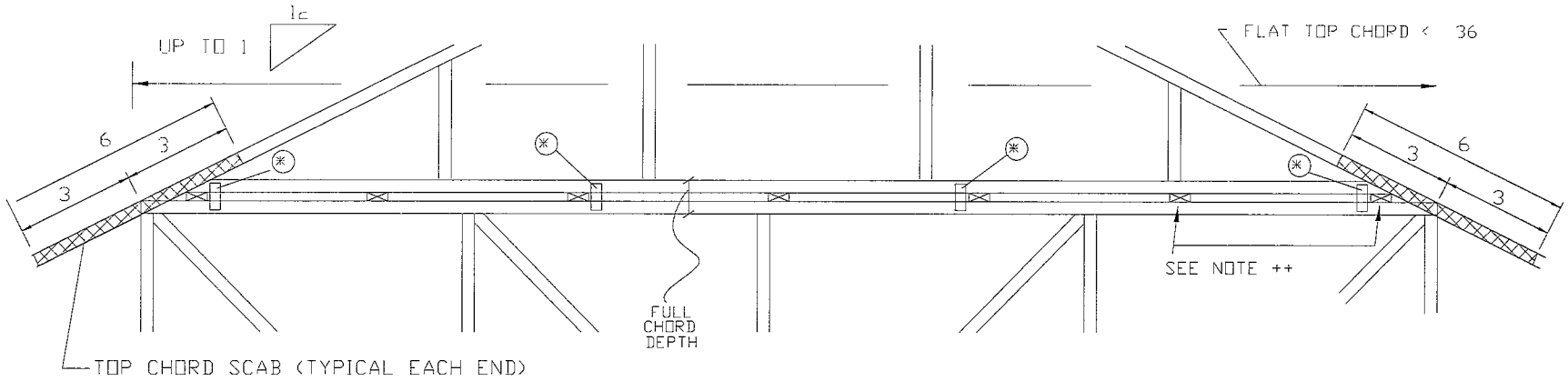

* IN ADDITION PROVIDE CONNECTION WITH ONE OF THE FOLLOWING METHODS	
TRULOX USE 3x8 TRULOX PLATES FOR 2x4 CHORD MEMBER AND 3x10 TRULOX PLATES FOR 2x6 AND LARGER CHORD MEMBERS ATTACH TO EACH FACE @ 4 OC WITH (4) 0.120 x1.375 NAILS INTO CAP BOTTOM CHORD AND (4) IN BASE TRUSS TOP CHORD TRULOX PLATES MAY BE STAGGERED 2 OC FRONT TO BACK FACES	28PB WAVE PIGGYBACK PLATE ONE 28PB WAVE PIGGYBACK PLATE TO EACH FACE @ 4 OC ATTACH TEETH TO PIGGYBACK AT TIME OF FABRICATION ATTACH TO SUPPORTING TRUSS WITH (4) 0.120 x1.375" NAILS PER FACE PER PLY PIGGYBACK PLATES MAY BE STAGGERED 2 OC FRONT TO BACK FACES
APA RATED GUSSET 8 8 x7/16 (MIN) APA RATED SHEATHING GUSSETS (EACH FACE) ATTACH @ 4 OC WITH (8) 6d COMMON (0.113 x2) NAILS PER GUSSET (4) IN CAP BOTTOM CHORD AND (4) IN BASE TRUSS TOP CHORD GUSSETS MAY BE STAGGERED 2 OC FRONT TO BACK FACES	2x4 VERTICAL SCABS 2x4 SPF#2 FULL CHORD DEPTH SCABS (EACH FACE) ATTACH @ 4 OC WITH (6) 10d BOX NAILS (0.128 x3) PER SCAB IN CAP BOTTOM CHORD AND (3) IN BASE TRUSS TOP CHORD SCABS MAY BE STAGGERED 2 OC FRONT TO BACK FACES

WILLIAM H. KRICK
LICENSE
No. 70861
STATE OF FLORIDA
PROFESSIONAL ENGINEER

04/19/2013
Apr 19 '13

TW
Building Components Group Inc.
Earth City MO 63045

WARNING READ AND FOLLOW ALL NOTES ON THIS SHEET
Truss requir xtreme care n fabricating handling shipping installing and bracing Re and f low Bu d g Compone t Safety I formatior by TPI and WTCA) for safety practices prior to perf rming the e f tior tal r hal provide tempora y bracing per BCSI Unless noted th w t p cho d shal hav prope y attached structu al pane s and bottom chord shall have prope y attached rigid ceil g Locatio hown or p rmanen atera restraint of webs shall have bracing st lled per BCSI se tions B3 & B7 See thi job general notes page fo more information

* IMPORTANT * URNI OPY OF HI DESIGN O INSTALLATION CONTRACTOR
TTW Building Compone t Gr up Inc (WBCG) hal not be e ponsible for any deviation from his de igr any fa e o bu d the t uss n conformance with TPI or fabricating, handling shipping t l g & b c g f t u e TTWBCG cor ector plate are made of 20/18/16GA (W,H/S/K) ASTM A grd 7 40/60 K/W/H S galv stee Apply ates to each face of truss positioned as shown above nd o oirt D ta s
A I thi dr w g or v pag ndi at acceptanc and professiona engineering responsibility ly the us mporent design hown. T e uitabi ty and use of this component for any bu ding the ibility f the Buidi g De gner pe ANSI/TPI 1 Sec 2
TW BCG www twbcg m TPI www tp t com WTCA www sbc ndustry.com ICC www c safe org

REF	PIGGYBACK
DATE	3/15/10
DRWG	PB1400310
SPACING	24 0

Gable Stud Reinforcement Detail

A CE 7-10 120 mph Wind Speed 15 Mean Height Enclosed, Exposure C Kzt = 100

Or 100 mph Wind Speed 15 Mean Height Partaly Enclo ed Exposure C Kzt 100
Or 100 mph Wind Speed 15 Mean Height Enclosed Exposure D Kzt 100

Max Gable Vertical Length

2x4 Gable Vertical Spacing	Species	Brace Grade	No Braces	(1) 1 4 L Brace * Group A	(1) 1 4 L Brace * Group B	(1) 2x4 L Brace * Group A	(1) 2x4 L Brace * Group B	(2) 2x4 L Brace ** Group A	(2) 2x4 L Brace ** Group B	(1) 2x6 L Brace * Group A	(1) 2x6 L Brace * Group B	(2) 2x6 L Brace ** Group A	(2) 2x6 L Brace ** Group B
24" o c	SPF HF	#1 / #2	4 10	8 2	8 6	9 8	10 1	11 6	12 0	14 0	14 0	14 0	14 0
		#3	4 7	7 9	8 3	9 7	9 11	11 5	11 10	14 0	14 0	14 0	14 0
		Stud	4 7	8 1"	8 4	9 7	9 11"	11 5	11 10	14 0	14 0	14 0"	14 0
		Standard	4 7	8 1	8 4	9 7"	9 11	11 5	11 10"	14 0	14 0	14 0	14 0
	SP DFL	#1	4 11	8 3	8 7	9 9	10 1	11 7	12 1	14 0	14 0"	14 0"	14 0
		#2	4 10	8 2	8 6	9 8"	10 1	11 6	12 0	14 0	14 0"	14 0	14 0
		#3	4 7	6 11	7 4	9 3	9 10"	11 5	11 10	14 0	14 0"	14 0	14 0
		Stud	4 7"	6 11	7 4"	9 3	9 10"	11 5"	11 10	14 0	14 0	14 0	14 0"
		Standard	4 7	6 0	6 4	8 0	8 6	10 10	11 7	12 6	13 5	14 0	14 0
16" o c	SPF HF	#1 / #2	5 6"	9 5	9 9	11 1"	11 6	13 2"	13 9"	14 0	14 0	14 0	14 0
		#3	5 3	9 3"	9 9"	10 11"	11 4"	13 0"	13 7"	14 0"	14 0"	14 0"	14 0"
		Stud	5 3	9 3"	9 7"	10 11"	11 4	13 0"	13 7"	14 0"	14 0"	14 0	14 0"
		Standard	5 3	9 3"	9 7"	10 11	11 4"	13 0"	13 7"	14 0"	14 0	14 0"	14 0"
	SP DFL	#1	5 8	9 5	9 10"	11 2"	11 7"	13 3	13 10	14 0	14 0	14 0	14 0"
		#2	5 6	9 5	9 9"	11 1"	11 6"	13 2"	13 9	14 0"	14 0"	14 0"	14 0"
		#3	5 3	8 6"	9 0"	10 11"	11 4"	13 0"	13 7	14 0	14 0"	14 0"	14 0"
		Stud	5 3"	8 6"	9 0"	10 11	11 4"	13 0"	13 7"	14 0	14 0"	14 0"	14 0"
		Standard	5 3	7 4"	7 10"	9 9"	10 5"	13 0"	13 7"	14 0"	14 0"	14 0	14 0
12" o c	SPF HF	#1 / #2	6 1"	10 4	10 8"	12 2"	12 8"	13 2"	14 0"	14 0"	14 0"	14 0"	14 0"
		#3	5 9"	10 2"	10 7"	12 0	12 6"	14 0"	14 0	14 0"	14 0"	14 0"	14 0"
		Stud	5 9	10 2	10 7	12 0	12 6"	14 0"	14 0"	14 0"	14 0"	14 0	14 0
		Standard	5 9	10 2"	10 7"	12 0"	12 6"	14 0"	14 0"	14 0"	14 0"	14 0"	14 0"
	SP DFL	#1	6 2	10 5"	10 9	12 3"	12 9"	14 0	14 0"	14 0"	14 0"	14 0"	14 0"
		#2	6 1	10 4	10 8	12 2"	12 8	14 0	14 0"	14 0"	14 0	14 0	14 0
		#3	5 9	9 9"	10 5	12 0"	12 6"	14 0	14 0"	14 0"	14 0	14 0"	14 0"
		Stud	5 9	9 9	10 5	12 0	12 6	14 0	14 0	14 0	14 0	14 0	14 0"
		Standard	5 9"	8 6"	9 0"	11 3	12 1	14 0"	14 0"	14 0"	14 0"	14 0"	14 0

Bracing Group Species and Grades

Group A

Spruce Pine Fir		Hem Fir	
#1 / #2	Standard	#2	Stud
#3	Stud	#3	Standard

Douglas Fir Larch	Southern Pine***
#3	#3
Stud	Stud
Standard	Standard

Group B

Hem Fir
#1 & Btr
#1

Douglas Fir Larch	Southern Pine***
#1	#1
#2	#2

1x4 Braces shal be SRB (Stress-Rated Board)

***For 1x4 So Pine use only Industria 55 or Industr al 45 Stress-Rated Boards Group B va ues may be used w th these grades

Gable Truss Detail Notes

Wind Load deflection cr teron s L/240

Prov de uplf t connecton s for 35 plf over cont nuous bearing (5 psf TC Dead Load)

Gable end supports load from 4 0 outlookers w th 2 0" overhang or 12 plywood overhang

So Pine umber desgn values based on the ALSC January 2012 ru n

Attach "L braces with 10d (0.128 x3 0 m n) nails

✳ For (1) "L brace space nails at 2 o.c n 18 end zones and 4 o.c between zones

✳✳For (2) "L braces space nails at 3" o c n 18" end zones and 6" o.c between zones

L brac ng must be a mnmum of 80% of web member length

Gable Vertical Plate Sizes

Vertcal Length	No Splce
Less than 4 0	1X4 or 2X3
Greater than 4 0 but less than 11 6	2X4
Greather than 11 6	2 5X4

+ Refer to common truss desgn for peak splce and hee plates

Refer to the Bu ding Desgner for cond tons not addressed by ths detal

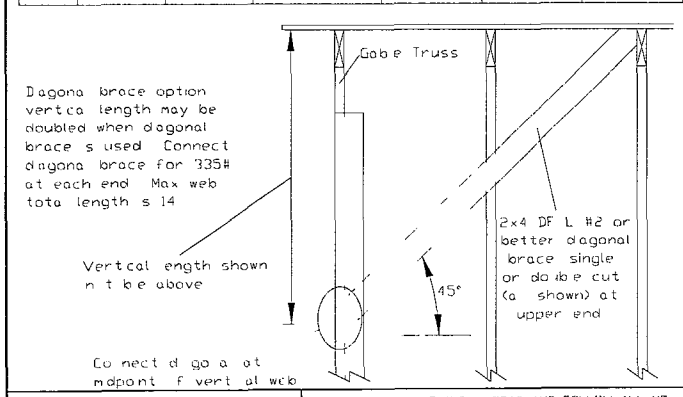

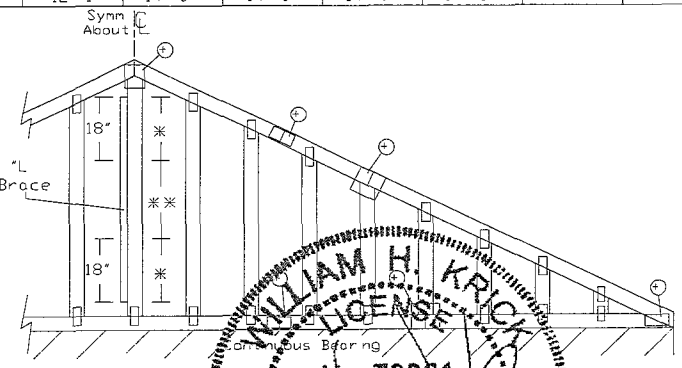

Refer to char above for max vertical length

WILLIAM H. KRICK LICENSE No. 70861 STATE OF FLORIDA PROFESSIONAL ENGINEER

04/19/2013
Apr 19 '13

TW Building Components Group Inc.

Earth City MO 63045

**WARNING READ AND FOLLOW ALL NO S ON THIS DRAWING!
** MPORTANT* FURNISH THIS DRAWING TO ALL CONTRACTORS NCLUDING THE INSTALLERS.

Tr s es requir e t me o e fab cating handling shipping nstall ng and bracing Re to ap follo the lat t edt n a BCSI Building Compone t Sa ety Information, by TPI and WTCA) for safe pract pr o performing these function Installers shall provide temporary bracing p Unle n rd therwise top chord shal have prop r y attached structural sheathing and bo chord hall have a proper y attached rigid ce ing Lo a ns shown for permanen ateral re o web ha v brac g n to ed per BCSI ections B3 B7 or B10 as applicable Apply plat each ace f ru a d postion as hown above and o th Joint Deta s unless noted otherw Refer to drawing 160A Z for sta ndard plate pos tions

TW Building Componen Group Inc s a l not be esponsible or any deviation from this drawing, any failure to build the tr s in conformance w th ANSI/TPI 1 or for handling shipping in talation & bracing of trus es A sea on this drawing or cover page sting this drawing, indicates acceptance of professiona engineering responsibi ty sole y for the design shown. The suitability and use of this d awing for any tructure the responsibi ty of the Building Desgner per ANSI/TPI Sec 2 For more informa on see this jobs genera notes page and these web s tes: TWBCG: www twbcg.com, TPI www tpinst.org WTCA: www sbc ndustry.org ICC www iccsafe.org

REF	ASCE7 10 GAB12015
DATE	2/14/12
DRWG	A12015ENC100212

MAX TOT LD 60 PSF

MAX SPACING 24 0

Gable Detail
For Let-in Vertcals

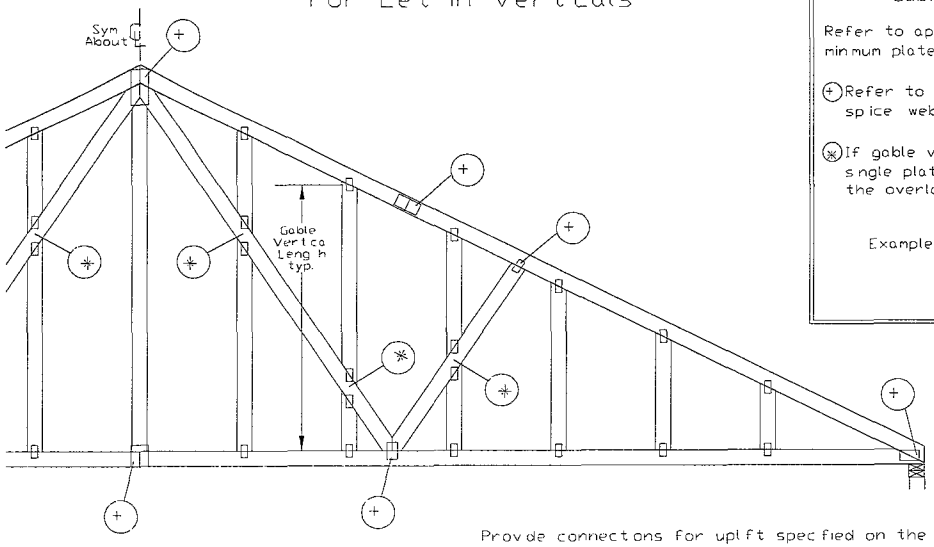

Gable Truss Plate Sizes

Refer to approprate ITW gable detail for minmum plate sizes for vertical studs

(+) Refer to Engneered truss desgn for peak spice web and heel plates

(*) If gable vertca pates overap use a sngle plate that covers the total area of the overlapped plates to span the web

Example

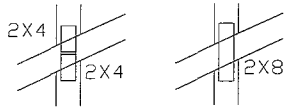

"T Renforcement Attachment Detail

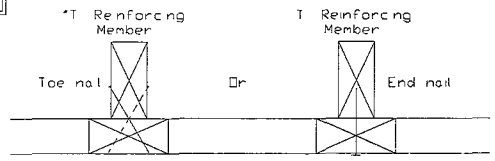

To convert from L to "T reinforcng members multiply T increase by length (based on approprate ITW gable detail)

Maxmum allowable T renforced gable vertcal length s 14 from top to bottom chord.

T renforcng member materal must match size spece and grade of the "L" renforcng member

Web Length Increase w/ T Brace

T Renf Mbr Size	T Increase
2x4	30 %
2x6	20 %

Example
ASCE 7-10 Wind Speed 120 mph
Mean Roof Heght - 30 ft Kzt = 1 00
Gable Vertcal = 24 oc SP #3
"T Renforcng Member Sze 2x4
T Brace Increase (From Above) - 30% = 1 30
(1) 2x4 "L Brace Length = 8 7"
Maximum T Reinforced Gable Vertcal Length
1 30 x 8 7" 11 2"

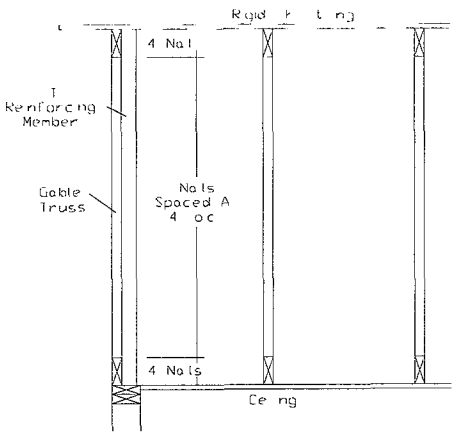

Provde connectons for uplft specfied on the engneered truss desgn

Attach each T renforcng member with
End D ven Na s
10d Common (0 148 x 3 mn) Nails at 4 oc plus
(4) ais n the top and bottom chords

Toenailed Na s
1 d Common 0 148 x3 mn) Toenals at 4 oc plus
(4) toenails n the top and bottom chords

Th s detai to be used w th the approprate ITW gable detal for ASCE wind load

ASCE 7 98 Gable Detail Drawngs
A13015980109 A12015980109 A11015980109 A10015980109
A13030980109 A12030980109 A11030980109 A10030980109

ASCE 7 02 Gabe Detal Drawings
A13015020109 A12015020109 A11015020109 A10015020109 A14015020109
A13030020109 A12030020109 A11030020109 A10030020109 A14030020109

ASCE 7-05 Gable Detail Drawngs
A13015050109 A12015050109 A11015050109 A10015050109 A14015050109
A13030050109 A12030050109 A11030050109 A10030050109 A14030050109

ASCE 7 10 Gable Detal Drawngs
A11515ENC100212 A12015ENC100212 A14015ENC100212 A16015ENC100212
A18015ENC100212 A20015ENC100212 A20015ENC100212 A20015PED100212
A11530ENC100212 A12030ENC100212 A14030ENC100212 A16030ENC100212
A18030ENC100212 A20030ENC100212 A20030ENC100212 A20030PED100212

See appropriate ITW gable detal for maxmum unrenforced gable vertical length

WILLIAM H. KRICK LICENSED No. 70861 STATE OF FLORIDA PROFESSIONAL ENGINEER

04/19/2013
Apr 19 '13

TW
Building Components Group Inc.

Earth City MO 63045

WARNING READ AND FOLLOW ALL NOTES ON THIS DRAWING!
IMPORTANT FURNISH THIS DRAWING TO ALL CONTRACTORS INCLUDING THE INSTALLERS

Trusses require ex reme care in fabricating handling, shipping, instal ng and bracng Refer to and follow the atest edition of BCSI (Bu ding Component Safety Information, by TPI and WTCA) for safety practices prior o performing these functions Installers sha provide temporary bracing per Unless noted otherwise top chord shal have proper y attached structura sheathing and bottom chord shall have a propery attached rigid ceiling. Locations shown for permanent lateral restraint of webs sha have bracng instal ed per BCSI sections B3 B7 or B10, as applicable Apply plates to each face of truss and position as shown above and on the Joint Deta s unless noted otherwise Refer to drawings 160A Z for standard plate positions.

I W Bu ding Components Group Inc shal not be responsible for any deviation from this drawing, any fa ure to build the truss in conformance w th ANSI/TPI 1 or for handling shipping, installation & bracng of trusses. A seal on this dra ing or cover page listing this drawing, indicates acceptance of professiona engineering responsibi ty solely for the design shown. The suitabil ty and use of this drawing for any structure is the responsibil ty of the Bu ding Designer per ANSI/TPI Sec 2
For more information see this job s genera notes page and these web sites.
ITWBCG www twbcg.com PI www tpin t.org WTCA www sbcndustry org ICC www iccsafe or

MAX TOT LD 60 PSF	
DUR FAC ANY	
MAX SPACING 24 0	

REF	LET-IN VERT
DATE	2/16/12
DRWG	GBLLETIN0212

ASCE 7-10 120 mph, 30' Mean Height, Closed, Exposure C
Common Residential Gable End Wind Bracing Requirements - Stiffeners

120 mph 30ft Mean Hgt ASCE 7 10 Enclosed Exp C or
100 mph 30ft Mean Hgt ASCE 7 10 Enclosed Exp D or
100 mph 30ft Mean Hgt ASCE 7 10 Part Enclosed Exp C
kzt 100 Wind TC DL 5 0 psf Wind BC DL 5 0 psf

Lateral chord bracing requirements
Top Continuous roof sheathing
Bot Continuous ceiling diaphragm

See Engineer s sealed design referencing this detail for lumber plates and other information not shown on this detail

Nails 10d box or gun (0128 x3 min nails

H Less than 4 6 - no stud bracing required

H Greater than 4 6 to 7 6 in length
provide a 2x6 stiffback at mid-height and brace stiffback to roof diaphragm every 6 0 (see detail below or refer to DRWG A12030ENC10)

H Greater than 7 6 to 12 0 max
provide a 2x6 stiffback at mid-height and brace to roof diaphragm every 4 0 (see detail below or refer to DRWG A12030ENC10)

✳ Optional 2x L reinforcement attached to stiffback with 10d box or gun (0128 x 3 min) nails @ 6 oc

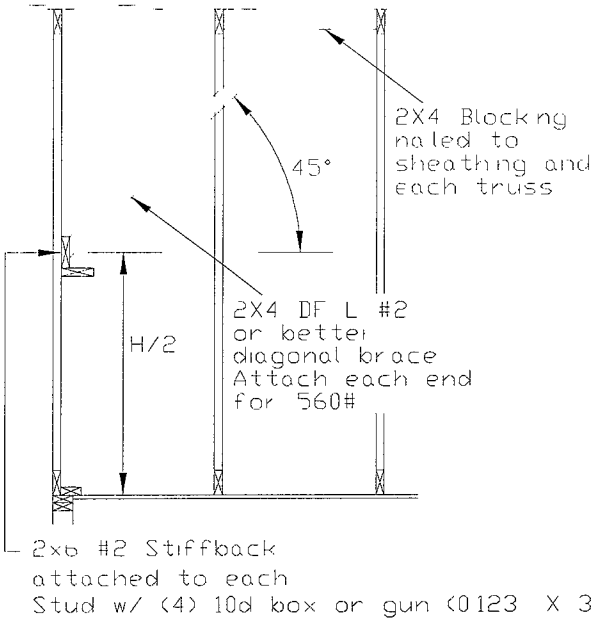

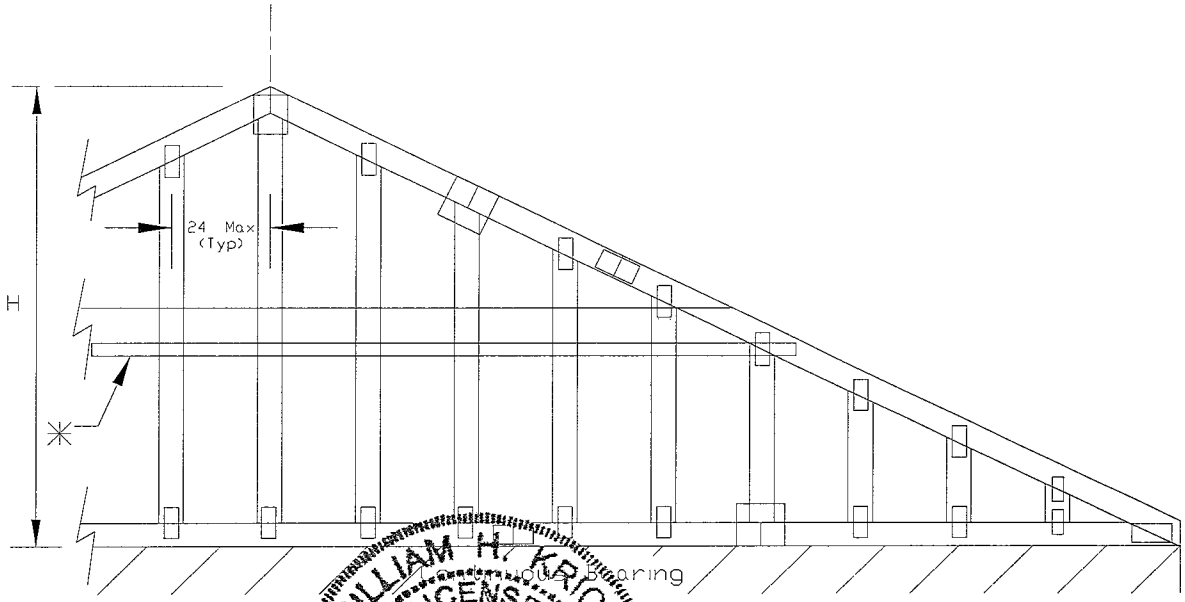

WILLIAM H. KRICK
LICENSE
No. 70861
STATE OF FLORIDA
PROFESSIONAL ENGINEER
04/19/2013

Apr 19 '13

Building Components Group Inc.

Earth City MO 63045

WARNING READ AND FOLLOW ALL NOTES ON THIS DRAWING!
IMPORTANT FURNISH THIS DRAWING TO ALL CONTRACTORS INCLUDING THE INSTALLERS

Trusses require extreme care in fabricating handling, shipping ins a ing and bracing. Refer to and follow the latest edition of BCSI (Building Component Safety Information by TPI and WTCA) for best practice prior to performing these functions Installers shall provide temporary bracing per BCSI Unless noted otherwise top chord shall have properly attached structural sheathing and bottom chord shall have a properly attached rigid ceiling. Locations shown for permanent lateral restraint of web shall have bracing installed per BCSI sections B3 B7 or B10 as applicable Apply plates to each face of truss and position as shown above and on the Joint Details unless noted otherwise Refer to drawings 160A Z for standard plate positions

ITW Building Component Group Inc shall not be responsible for any deviation from this drawing, any failure to build the truss in conformance with ANSI/TPI 1 or for handling shipping, installation & bracing of trusses A seal on this drawing or cover page listing this drawing, indicates acceptance of professional engineering responsibility solely for the design shown The suitability and use of this drawing for any structure is the responsibility of the Building Designer per ANSI/TPI Sec 2 For more information see this jobs general notes page and these web sites TWBCG www twbcg com TPI www tpinst org WTCA www sbcindustry org ICC www icc safe org

MAX TOT LD 60 PSF

MAX SPACING

REF	GE WHALER
DATE	2/14/12
DRWG	GABPST100212

Gable Stud Reinforcement Detail

A CE 7 10 1 0 mph Wind Speed 30 Mean Height Enclosed, Exposure C, Kzt = 100

- 100 Mph Wind Speed 30 Mean Height Partially Enclosed Exposure C Kzt 100
- 100 mph Wind Speed 30 Mean Height Enclosed Exposure D Kzt - 100

Max Gable Vertical Length	Gable Vertical Spacing	Species	Brace Grade	No Brace	1 1x4 L Brace * Group A	1 1x4 L Brace * Group B	(1) 2x4 L Brace * Group A	(1) 2x4 L Brace * Group B	(2) 2x4 L Brace ** Group A	(2) 2x4 L Brace ** Group B	(1) 2x6 L Brace * Group A	(1) 2x6 L Brace * Group B	(2) 2x6 L Brace ** Group A	(2) 2x6 L Brace ** Group B
	24" OC	SPF HF	#1 / #2	4 7	7 10	8 1	9 3	9 7"	11 0"	11 5"	14 0	14 0	14 0	14 0
			#3	4 4	7 2	7 8	9 1	9 5"	10 10	11 4"	14 0	14 0	14 0	14 0
			Stud	4 4	7 8	8 0	9 1	9 5	10 10	11 4	14 0	14 0	14 0	14 0
			Standard	4 4	7 6	8 0	9 1	9 5"	10 10	11 4"	14 0	14 0"	14 0"	14 0
		SP DFL	#1	4 8	7 10	8 2	9 3	9 8"	11 0	11 6	14 0	14 0	14 0"	14 0"
			#2	4 7	7 10	8 1	9 3	9 7	11 0"	11 5	14 0"	14 0	14 0	14 0
			#3	4 4	6 5	6 10	8 7	9 2	10 10	11 4	13 5	14 0	14 0	14 0"
			Stud	4 4	6 5	6 10	8 7	9 2"	10 10"	11 4"	13 5"	14 0"	14 0	14 0
			Standard	4 3"	5 7	5 11	7 5	7 11	10 0	10 9"	11 8	12 5"	14 0"	14 0
	16" OC	SPF HF	#1 / #2	5 3"	8 11"	9 3	10 7	11 0	12 7	13 1"	14 0	14 0"	14 0	14 0
			#3	5 0	8 10	9 3	10 5	10 10	12 5"	12 11	14 0	14 0	14 0	14 0
			Stud	5 0	8 10	9 2"	10 5"	10 10	12 5	12 11"	14 0	14 0	14 0"	14 0
			Standard	5 0	8 10	9 2	10 5"	10 10	12 5"	12 11	14 0	14 0"	14 0"	14 0
		SP DFL	#1	5 4"	9 0	9 4	10 7	11 0	12 8"	13 2	14 0"	14 0"	14 0	14 0
			#2	5 3	8 11"	9 3"	10 7	11 0"	12 7"	13 1	14 0"	14 0"	14 0	14 0
			#3	5 0	7 10	8 4	10 5	10 10"	12 5	12 11	14 0	14 0	14 0	14 0
			Stud	5 0	7 10"	8 4	10 5"	10 10"	12 5"	12 11"	14 0"	14 0"	14 0"	14 0
			Standard	5 0	6 10"	7 3	9 1"	9 8"	12 4"	12 11"	14 0	14 0"	14 0	14 0"
	12" OC	SPF HF	#1 / #2	5 9"	9 10	10 2	11 7"	12 1"	12 7	14 0"	14 0"	14 0"	14 0"	14 0
			#3	5 6"	9 8	10 1	11 6"	11 11	13 8	14 0"	14 0"	14 0"	14 0"	14 0
			Stud	5 6	9 8"	10 1	11 6"	11 11	13 8"	14 0	14 0"	14 0"	14 0	14 0"
			Standard	5 6"	9 8"	10 1	11 6"	11 11"	13 8"	14 0	14 0"	14 0"	14 0"	14 0
		SP DFL	#1	5 11	9 11	10 3	11 8"	12 2	13 11	14 0	14 0"	14 0	14 0"	14 0
			#2	5 9	9 10"	10 2	11 7	12 1	13 10	14 0	14 0"	14 0	14 0"	14 0
			#3	5 6"	9 1	9 8"	11 6"	11 11"	13 8"	14 0"	14 0	14 0"	14 0	14 0"
			Stud	5 6"	9 1	9 8	11 6	11 11	13 8	14 0"	14 0	14 0"	14 0	14 0"
			Standard	5 6"	7 10	8 4"	10 6	11 3	13 8"	14 0"	14 0	14 0	14 0	14 0"

Bracing Group Species and Grades

Group A

Spruce Pine Fir

#1 / #2	Standard
#3	Stud

Hem Fir

#2	Stud
#3	Standard

Douglas Fir Larch

#3
Stud
Standard

Southern Pine***

#3
Stud
Standard

Group B

Hem Fir

#1 & Btr
#1

Douglas Fir Larch

#1
#2

Southern Pine* *

#1
#2

1x4 Braces shall be SRB (Stress Rated Board)

***For 1x4 So. Pine use only Industrial 55 or Industrial 45 Stress Rated Boards Group B values may be used with these grades

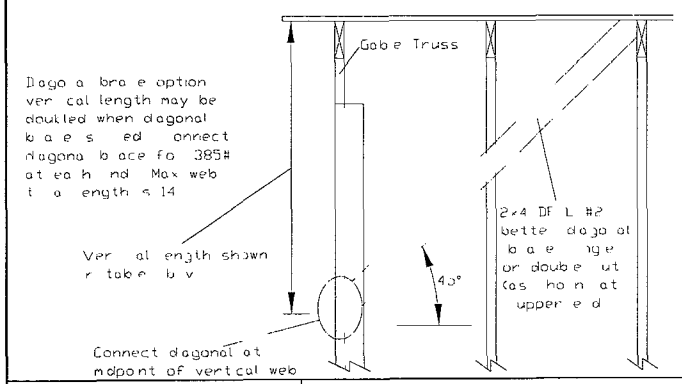

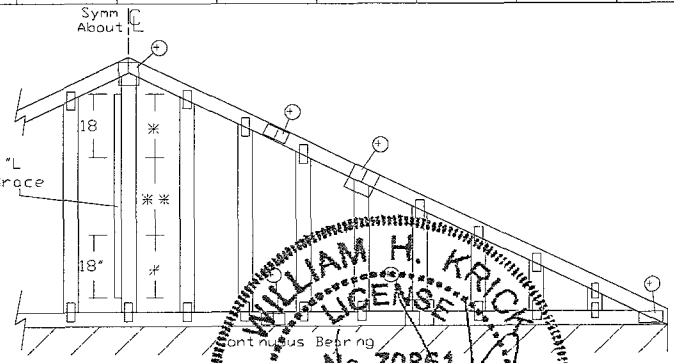

Refer to chart above for max gable vertical length

Gable Truss Detail Notes

Wind Load deflection criterion is L/240

Provide uplift connections for 70 plf over continuous bearing (5 psf TC Dead Load)

Gable end supports load from 4 0 outlookers with 2 0 overhang or 12 plywood overhang

Sp Pine lumber design values based on the ALSC January 2012 rulin

Attach L braces with 10d (0.128"x3 0 min nail

* For (1) L" brace space nails at 2 oc in 18 end zones and 4 oc between zones

** For (2 L braces space nails at 3 oc in 18 end zones and 6 oc between zones

L bracing must be a minimum of 80% of web member length

Gable Vertical Plate Sizes

Vertical Length	Nail Spacing
Less than 4 0	1X4 or 2X3
Greater than 4 0 but less than 11 6	2X4
Greather than 11 6	2 5X4

+ Refer to common truss design for peak splice and heel plates

Refer to the Building Designer for conditions not addressed by this detail

WILLIAM H. KRICK LICENSED No 70861 STATE OF FLORIDA PROFESSIONAL ENGINEER

04/19/2013

Apr 19 '13

TW Building Components Group Inc.

Earth City MO 63045

*WARNING!** READ AND FOLLOW ALL NOTES ON THIS DRAWING!
* IMPORTANT FURNISH THIS DRAWING TO ALL CONTRACTORS INCLUDING THE INSTALLERS

Trusses require extreme care in fabricating handling shipping installing and bracing Refer to and follow the latest edition of BCSI Building Component Safety Information by TPI and WTCA for safety practices prior to performing these functions In lateral sheathing provide temporary bracing per BCSI Unless noted otherwise top chord shall have properly attached structural sheathing and bottom chord shall have a properly attached rigid ceiling. Locations shown for permanent lateral restraint of webs shall have bracing installed per BCSI sections B3 B7 or B10 as applicable Apply plates to each face of truss and position as shown above and on the Joint Details unless noted otherwise Refer to drawings 160A Z for standard plate positions

ITW Building Components Group Inc shall not be responsible for any deviation from this drawing any failure to build the truss in conformance with ANSI/TPI 1 or for handling shipping installation & bracing of trusses A seal on this drawing or cover page listing this drawing, indicates acceptance of professional engineering responsibility solely for the design shown. The suitability and use of this drawing for any structure is the responsibility of the Building Designer per ANSI/TPI 1 Sec.2
For more information see this job's general notes page and these web sites:
ITWBCG www.twbcg.com TPI www.tpinst.org WTCA www.sbcindustry.org ICC www.iccsafe.org

MAX TOT LD 60 PSF

MAX SPACING 24 0

REF	ASCE7 10-GAB12030
DATE	2/14/12
DRWG	A12030ENC100212

NAIL SPACING DETAIL

MINIMUM SPACING FOR SINGLE BLOCK IS SHOWN DOUBLE NAIL SPACINGS AND STAGGER NAILING FOR TWO BLOCKS GREATER SPACING MAY BE REQUIRED TO AVOID SPLITTING

BLOCK LOCATION SIZE LENGTH GRADE AND TOTAL NUMBER AND TYPE OF NAILS ARE TO BE SPECIFIED ON SEALED DESIGN REFERENCING THIS DETAIL

LOAD PERPENDICULAR TO GRAIN
A EDGE DISTANCE AND SPACING BETWEEN STAGGERED ROWS OF NAILS (6 NAIL DIAMETERS)
B - SPACING OF NAILS IN A ROW (12 NAIL DIAMETERS)
C END DISTANCE (15 NAIL DIAMETERS)

LOAD PARALLEL TO GRAIN
A EDGE DISTANCE 6 NAIL DIAMETERS)
C SPACING OF NAILS IN A ROW AND END DISTANCE (15 NAIL DIAMETERS)
D - SPACING BETWEEN STAGGERED ROWS OF NAILS (7 1/2 NAIL DIAMETERS)

IF NAIL HOLES ARE PREBORED SOME SPACING MAY BE REDUCED BY THE AMOUNTS GIVEN BELOW
* SPACING MAY BE REDUCED BY 50%
** SPACING MAY BE REDUCED BY 33%

MINIMUM NAIL SPACING DISTANCES

NAIL TYPE	DISTANCES A	B*	C**	D
8d BOX (0113 X 2 5 MIN)	3/4	1 3/8	1 3/4	7/8
10d BOX (0128 X 3 ,MIN)	7/8	1 5/8	2	1
12d BOX (0128 X 3 25 MIN)	7/8	1 5/8	2	1
16d BOX (0135 X 3 5 MIN)	7/8	1 5/8	2 1/8	1 1/8
20d BOX (0148 X 4 ,MIN)	1	1 7/8	2 1/4	1 1/8
8d COMMON (0131 X 2 5 MIN)	7/8	1 5/8	2	1
10d COMMON (0148 X 3 MIN)	1	1 7/8	2 1/4	1 1/8
12d COMMON (0148 X 3 25 MIN)	1	1 7/8	2 1/4	1 1/8
16d COMMON (0162 X 3 5 MIN)	1	2	2 1/2	1 1/4
GUN (0120 X 2 5 MIN)	3/4	1 1/2	1 7/8	1
GUN (0131 X 2 5 MIN)	7/8	1 5/8	2	1
GUN (0120 X 3 MIN)	3/4	1 1/2	1 7/8	1
GUN (0131 X 3 MIN)	7/8	1 5/8	2	1

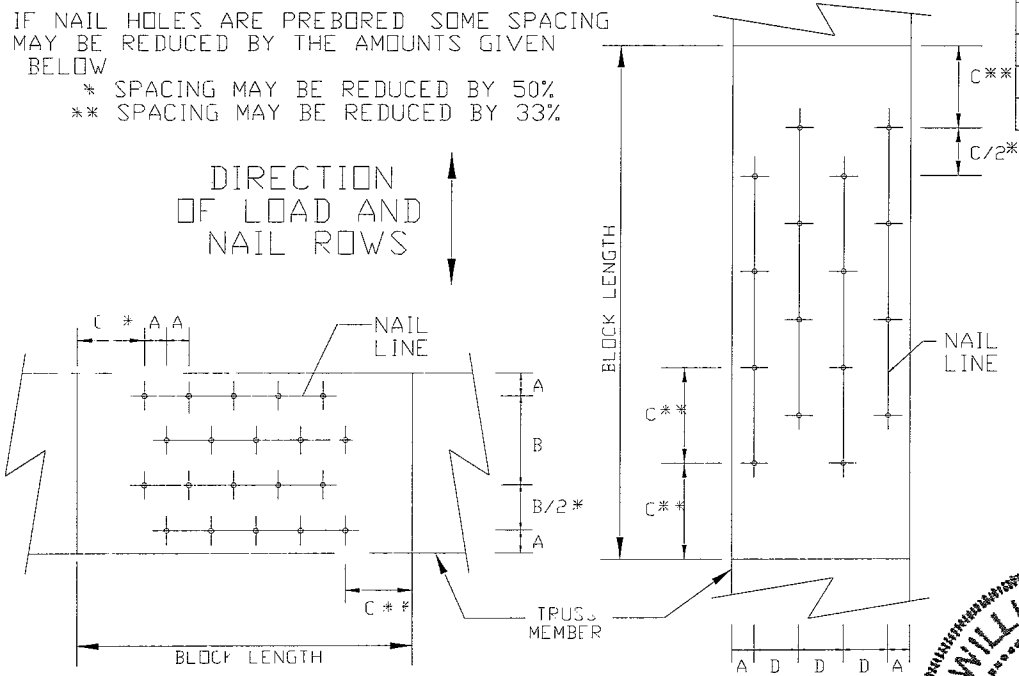

LOAD APPLIED PERPENDICULAR TO GRAIN LOAD APPLIED PARALLEL TO GRAIN

WILLIAM H. KRICK LICENSE No. 70861 STATE OF FLORIDA PROFESSIONAL ENGINEER

04/19/2013

Apr 19 '13

TW Building Components Group Inc.

Earth City MO 63045

WARNING READ AND FOLLOW ALL NOTES ON THIS SHEET
Trusses require extreme care in fabricating, handling, shipping, installing and bracing. Refer to and follow BCSI Building Component Safety Information by TPI and WTCA for safety practices prior to performing these functions. Installers shall provide temporary bracing per BCSI. Unless specified otherwise top chord shall have properly attached structural panels and bottom chord shall have properly attached rigid ceiling. Locations shown for permanent lateral restraint of webs shall have bracing installed per BCSI sections B3 & B7. See this job's general notes page for more information.

IMPORTANT FURNISH COPY OF THIS DESIGN TO INSTALLATION CONTRACTOR
ITW Building Components Group Inc (ITWBCG) shall not be responsible for any deviation from this design, any failure to build the truss in conformance with TPI or fabricating, handling, shipping, installing & bracing of trusses. ITWBCG connector plates are made of 20/18/16GA (W,H/S/K) ASTM A653 grade 37/40/60 (K/W/H,S) galv steel. Apply plates to each face of truss, positioned as shown above and on Joint Details.
A seal on this drawing or cover page indicates acceptance and professional engineering responsibility solely for the truss component design shown. The suitability and use of this component for any building is the responsibility of the Building Designer per ANSI/TPI 1 Sec 2.
ITW BCG: www.twbcg.com TPI: www.tpinst.com WTCA: www.sbcindustry.com ICC: www.iccsafe.org

REF	NAIL SPACE
DATE	1/1/09
DRWG	CNNAILSP0109