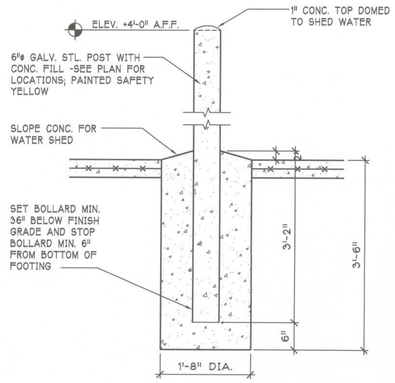

GALV. STEEL BOLLARD DETAIL

1C / A4.2

SCALE: 3/4"=1'-0"

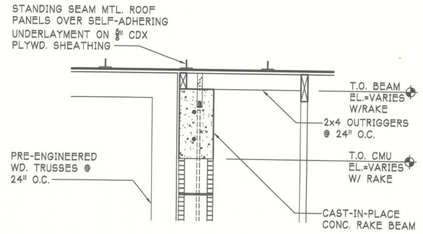

WALL @ ROOF DETAIL

5B / A4.2

SCALE: 3/4"=1'-0"

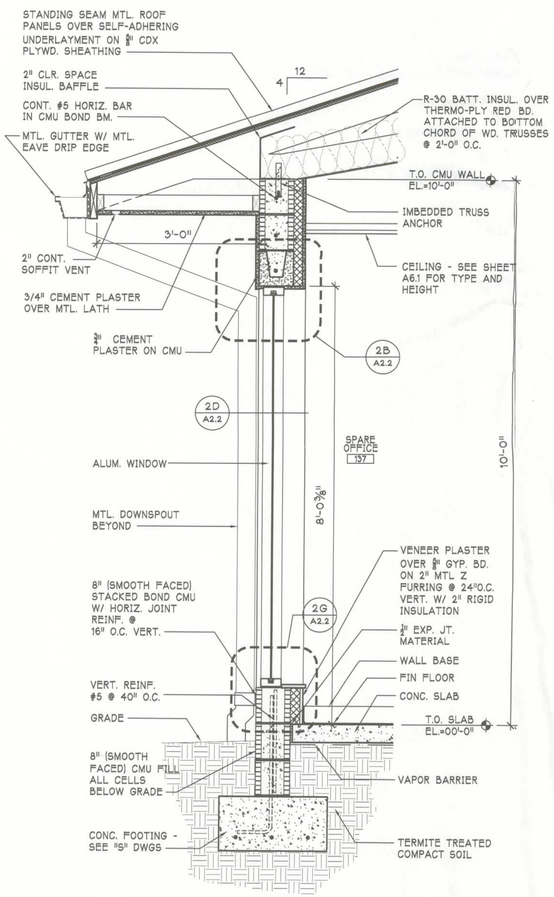

WALL SECTION

1G / A4.2

SCALE: 3/4"=1'-0"

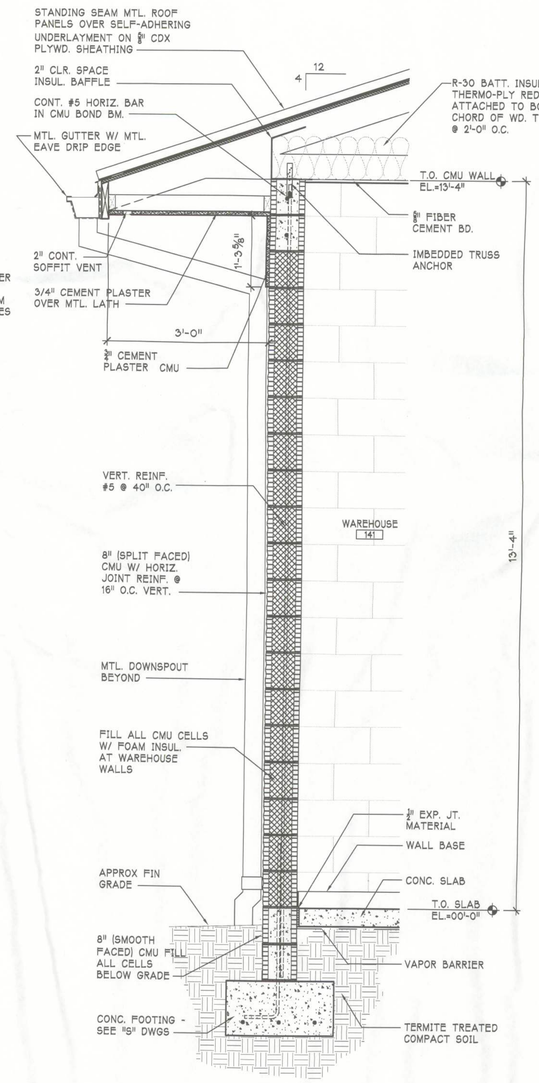

WALL SECTION

3G / A4.2

SCALE: 3/4"=1'-0"

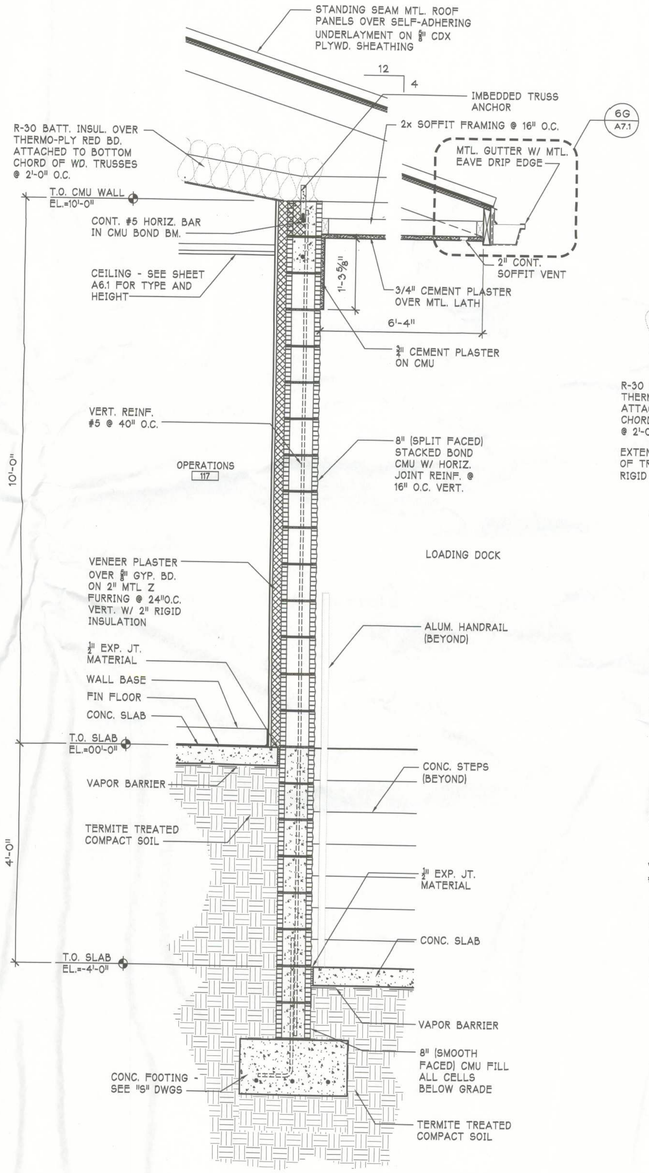

WALL SECTION

5G / A4.2

SCALE: 3/4"=1'-0"

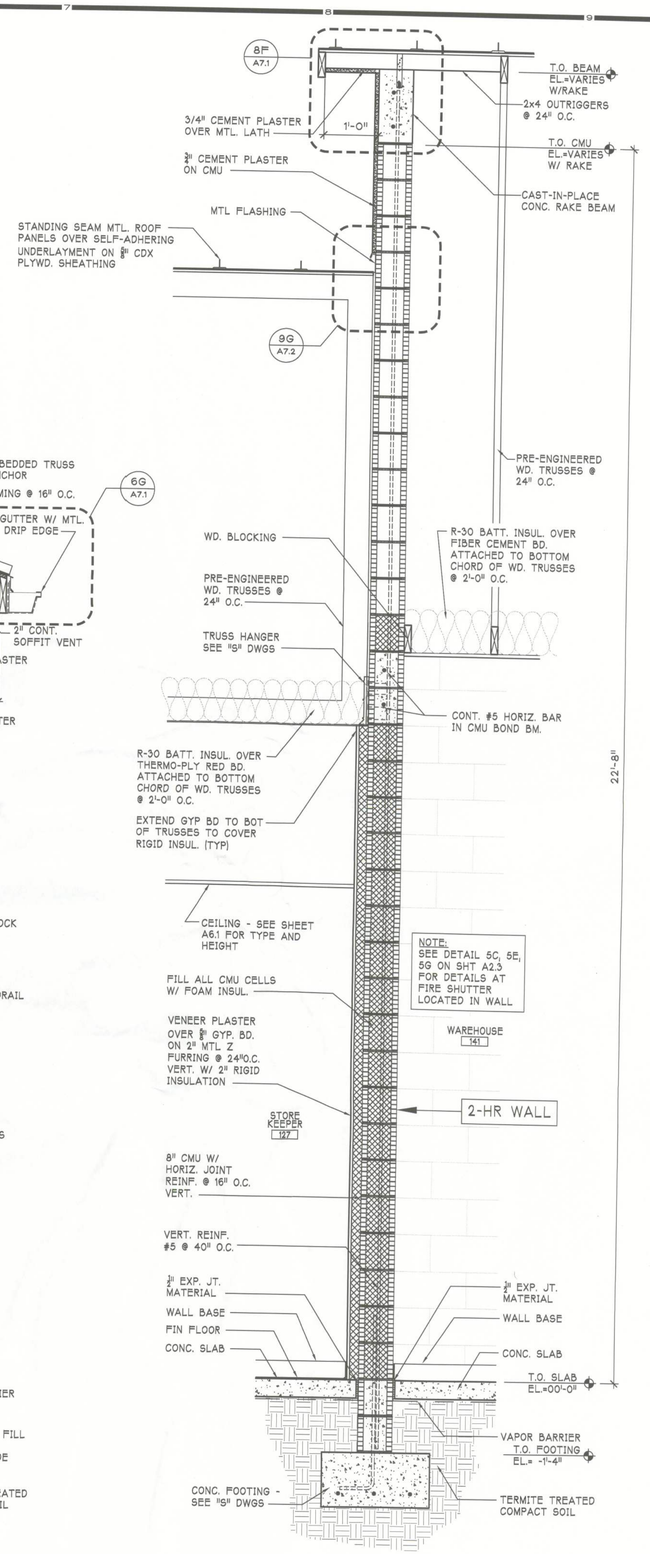

WALL SECTION

8G / A4.2

SCALE: 3/4"=1'-0"

Bid Documents

Brame Architects

606 N.E. First Street
Gainesville, Florida 32601
352 / 372-0425
FAX 352 / 372-0427

Clay Electric Cooperative, Inc.
A Touchstone Energy Cooperative

NEW DISTRICT OFFICE

1659 SW State Road 47 Lake City, Florida

SEAL

WILLIAM W. BRAME
REGISTRATION # AR-0007024
CORP. LIC. NO. AA C000071

WALL SECTIONS

DRAWN	GBV
CHECKED	BB
DATE	02/07/2012
CAD	3702060/CD
REVISIONS	
FILE NO.	3702.060

SHEET

A4.2