MIAMI-DADE COUNTY

UTwMdy) TBy VYdTRK(MyVdh MBU TCVBV) SCdTcVKdCTc 2dTd-
IVMdU MBU CVUT MU) SBScydMySVB USuScSVB

) SM) SBUMUT CVKByh
wdVUKCy CVBydV(cTCySVB
MM7m1 Hq idH XXeP " im7
w;#" ;eg' ;"# aaM31,iF3F
J 237d6aM,il-m g 237d6aM,il--
x H ZHZ x pQ

BVy SCT VY MCCTwy MBCT 2BVM-

yM) GV I Z w Z Q ((C
aai s n c
F 9) V en/ir

cCVwTv

J &, yDN ; LX; U; X" "X &X# ';¼#L'X 'X # " XU '#; U X ; U &X X K¼ ¼; " # X;#' RJ &X " ¼ " X #; L" ; X" &# LXX X ;X X" # " #¼¼X X" L w;#" ;,b #"XA PnP ,C " ¼ A ' HX¼; LX X" ; w;#" ;,b #"XA # " &X # X# &XX#" X" L &XN & ; p # ; Uv ; ";¼; 2Np v6R

J &, yDN &#" LX #';" #KX &XX ; # ; "# X # X" LX' RJ &Xw;#" ;,b #"XA C " ¼ A ' HX¼; 2; w;#" ;,b #"XA 6# "o &XNp v2; # X# &X &# w;#" ;,b #"XA 6 XX X &X ;U& &# X &, " ¼ " # X;#' X X" K #'; # # ¼X XRcK &, " ¼ " # X;#' K#;' XK " ; &X#¼¼X X" " # Xe &X " # K#¼ X ;" ; ¼ &XX X X K ¼& X ; U# " &XNp v " # ;" " X";# X' X ' Xe" ";Ke X " &X X K ¼& " ¼ " # X;#' ; &, &X; G ; ";¼; RPnP XX X &X ;U& X ' X &, #¼¼X # ¼Xe;K; ; "XX" ; X" L w;#" ;,b #"XA C " ¼ A ' HX¼; &# &, " ¼ " # X;#' K#;' " XX &X X ; X" X K &X# ';¼#L'X L ;"'; U¼ "XR

J &, " ¼ ; # X" # "X¼;LX" &XX; e# " &# LXX "X;U X" ¼ " ' ; & &Xg' ;"# O ;"'; UA "X; ¼' "; U &Xp ;U&/ X' ¼, p ;¼# Xj X K &Xg' ;"# O ;"'; UA "XR

UTcCdSwySVBvyM) GV d c

(MIT(SBRv n#¼& ; &#" LX# # X" # X '#LX' ; & &X" # K#¼ XW #" X ' U e¼, e # X# " K" ; U # X" X 4lw;#" ;,b #"XA C " ¼ A ' N X" le 'X &X ; X X" &XX; R

dTBTs M(K &, yDN &#" LX¼ ;"XX" #KX # X X #' # ';¼#; &# LXX K;'X" # " &XX&# LXX ¼&# UX; &X# ';¼#L'XL ;"'; U¼ "X XU# ; X' #KKX¼; U &X XK " # ¼X K &, " ¼R

yTd) SBMySVB K &, yDN ;" ¼¼ #KX &XX ; # ; "# X ;K &XX&# LXX # X ; ; ¼&# UX; &X " # X;#' e Xe# "o " # K#¼ X K &X " ¼ ¼X Rw; X K &, yDN # # X " X" X K# " ¼eK #'Xe#" X ; ; U # &X X &#" # " # ;¼#" X" ; # X &, yDNRg#;' X ¼ " ' ; &# X¼; K &, yDN &#" LX¼# XK X" ; # ; # " X" #' KyDNR

MUuTdyScT) TByv J &Xy DN " LX X¼X"X" L &X " w;#" ;,b #"XA eg' ;"#e # " K" X" L &X X ; # ; "# X" # LX"; '# X" ; #" X ; ; U'; X# XRcK# ; K &Xy DN ; "; '# X"e &X ; &#" LX" X ; ; X ; X R

SBcwTCySVBv N ¼ K &, X ; Xy DN &#" LX ;"X" &X X L &X" # K#¼ X ; "; ;L # " &#" LX# #;'#L'XK ; X¼; # &XGL ; X# &X X X K &XO ;"'; UDKK¼,#'R

J &, yDN X ; X y DN 8 im,m3mMRi # " ¼ ; K #UX M & U&dR
J &X L" ; X" " ¼ " X # ; # X ;X X" L N'X J ;UX#R

MIAMI-DADE COUNTY APPROVED

BVMB xwaaEina5xia
T H UH v rapirpaD
M H UH vrrpitpaa
wH r 1

d VVYSBR Mc cT) I (h Mwwd Vu M(

CH v	P K, U
c XECH v	N &#' H&, U'X
) H H v	. #" ; # X
U Q y v	q "

c CVwT

J &, # X **y M) GV L H 9L H s Z H 9L H w 9L H w y H Wy 9H Z**
L H w c Sd # &#' &, U'X e" # K#¼ X' L **y M) GV I Z w Z Q ((C9**# "X¼;LX'
; &, y ;½X KN¼½X # ½X# " "X;U X' ¼ " ' ; & &Xg' ;"# O ;"'; UA "Xp ;U&/ X' ¼, p ;¼# Xj XR

wd VUKCy UTc Cd Swy SVB

	w Z Q	**U**	**y**	**w Z Q U Q**
			c Q QH	
L H	*n 2L3L4L5L*	Ma 1 a- ao,1	J NH MMm	b ;" X ; #' # &#' &, U'XR
L H s Z H	*n 2L4*	Ma 1 a- ao,1	J NH MMm	b ;" X ; #' # &#' &, U'XR
L H w	*n 2L3L4*	Ma 1 a- ao,1	J NH MMm	b ;" X ; #' # &#' &, U'XR
L H w y H Wy	*n 4L5L*	Ma 1 a- ao,1	J NH MMm	b ;" X ; #' # &#' &, U'XR
L H w c Sd	*n 5*	Ma,MF a-,ao7	J NH MMm	b ;" X ; #' # &#' &, U'XR

) MBKYMCy Kd SBR (VCMy SVBc

rx b #"# eJ I
ax J ¼#' #eN.
tx g X'X;¼ ew b
nx C&,"; L Uef H
Dx v '; ew D

MIAMI-DADE COUNTY APPROVED

BVMB xwaaEi na5xi a
T H UH v rapi rpaD
M H UH vrrpi t paa
wH a 1

TuSUTBCT cKI) Syy TU

y M Q	y SZ	y BH pl	UH
x ”X ; X . #L # ;Xec ½R	JNHMm3 S x. 3-m	mFANFFi l i	mi ci l cml
	NHJw b aFdi	mi y f aa7Ma	m-ci a cmi
	NHJw b aFdi S JNHMm3	Pi-M . X X	ma cMmoMM
	NHJw b aFdi	F37-MMm1Fa	m7ci doMF
	JNHMm3	F37-MMm1Fa	mi cM-cMI
	NHJw n Mm7	F37-MMm1Fa	m7ci doMF
	NHJw b aMdlMcA’# g	F373mFa3l i	Mmoi moMI
	NHJw b aFdi	F37-dl m373	MmoMi ci m
	NHJw b aFdi S JNHMm3	P i-M . X X	MmoMi ci m
	NHJw b aFdi	F37-d7i MlF	MmoMi ci m
	NHJw b aFdi S JNHMm3	F3-mM-ml-	Mmoi aci m
	NHJw b aFdi S JNHMm3	F3-mad-l-7	m3cml ci i
CPcN &#’ JX½& ’ U,Xec ½R	JNHMmm	JNC,Ml-,mi,mM	ml ci dcml
	JNHMmm	JNC,Mam,mi,mM	ml ci dcml
	JNHMmm	JNC,MaM,mi,mM	ml ci dcml
CPcA ¼; w#X;#’ JX½& ’ U,X . . A	JNHMmm	JNC,ama,mi,mM	MlcMlcMF
	JNHMmm	JNC,am3,mi,mM	mi cMmoMI
	JNHMmm	JNC,aM3,mi,mM	m-cmi cMI

(S) Sy My SVBc

rx g; X¼# ;K¼#; ; # K&; #½X # ½XT XKX #¼ X N X’P K, Uw#X;#’ b; X¼ K K, X #; U K&; ” ¼R
ax H&; U’X &#’’ LX; #’’X’ K“ X# &X,U& ; X ½X Kaa KR
tx N’’ ” ¼ ’; X’ &XX; &#’’ &# X# #’; # # ½X# ”; ; #¼ ”# ½X ; & &Xg’ ;”# O ;””; UA ”X# ” P ’XdMu i m,a K&Xg’ ;”# N”“ ; ; #; XA ”XR

SBcy M((My SVB

rx H&; U’X &#’’ LX; #’’X’; ¼“ ’;# ½X ; &P K, UN ’;¼#; H# ”# ” PNHMMI R
ax g’# &; U &#’’ LX; #¼ ”# ½X ; &P K, UN ’;¼#; H# ”# ” PNHMMI R
tx J &X“ # K#¼ X &#’’ ;”X¼X#’ ; X # ’;¼#; ; ¼; R
nx n X# ” ¼ X’# &#’’ LX; ¼“ ’;# ½X ; &b X#;’ N e# #½&X’R
Dx y #;’; U &#’’ LX; ¼“ ’;# ½X ; &b X#;’ WVW# #½&X’R

(MI T(SBR

H&; U’X &#’’ LX X“ # X ’ ’#LXX’ ; & &X“ # K#¼ X #“ X# ”o ’ U e¼ # ” # X K“ # K#¼ ; U K#¼’; e# ” &XK’’ ; U # X“ X 4 w;#“ ;,b #”XA C ” ¼A ’N X’ ; & &Xw;#“ ;,b #”X A C ” ¼A ’HX#’ # XX LX’ 4

MIAMI-DADE COUNTY APPROVED

I KS(USBR wTd) Sy d TmKSd T) TByc

N X ; X’ L &XO ;””; UDK¼#’ &X# ’;¼#L’XO ;””; UA ”X; ”X X’ X #’ # X &X ; #’’#; K&; X“ RJ &; y ;½X KN¼½X # ½X ; ¼# LX X’ L #; # L ;””; U X“ ; R

MIAMI-DADE COUNTY APPROVED

BVMB xwaaEina5xia
T H UH v rapirpaD
M H UH vrrpitpaa
wH t 1

BVMB xwaaEina5xia
T H UH v rapirpaD
M H UH vrrpitpaa
wH n 1

UTy MS(M

L Td Sy MRT 9L Td Sy MRT s VVURMy T 9L Td Sy MRT wd T) SK) 9L Td Sy MRT wd V(SBT
y Sy MB Wy 9MBU L Td Sy MRT wd V(SBT c y Vd) YSRL y Td Sd

o 3

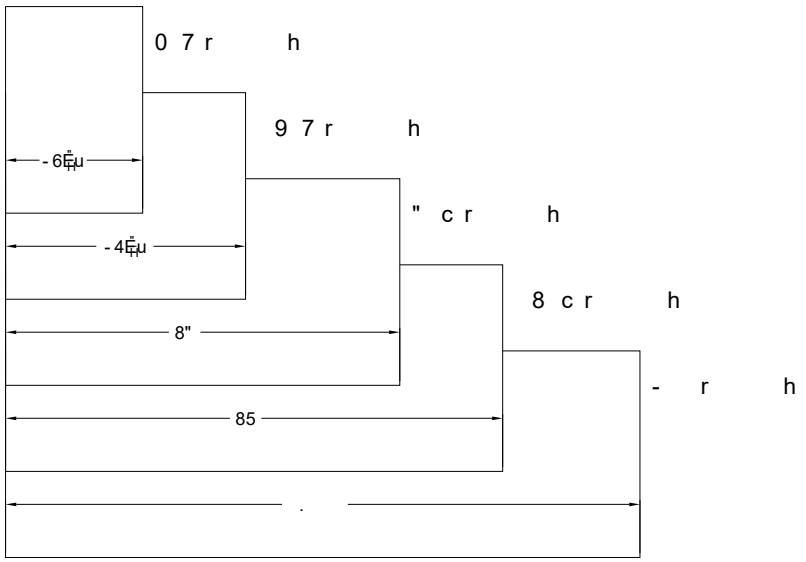

UTy MS(I

L Td Sy MRT 9L Td Sy MRT s VVURMy T 9L Td Sy MRT wd T) SK) 9L Td Sy MRT wd V(SBT
y Sy MB Wy 9MBU L Td Sy MRT wd V(SBT c y Vd) YSRL y Td Sd
YSRxr YMc y TBSBR wMy y Td B

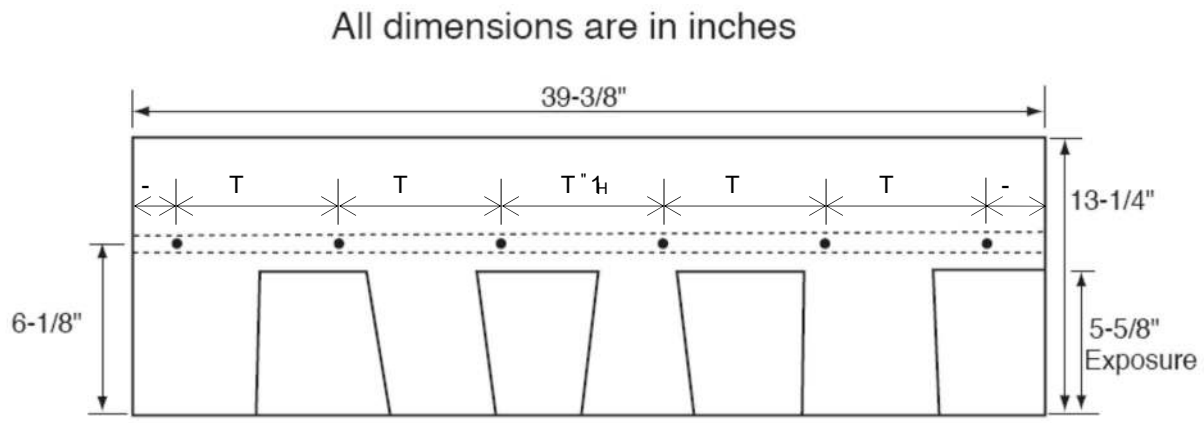

MIAMI-DADE COUNTY APPROVED

BVMB xwaaEina5xia
T H UH v rapirpaD
M H UH vrrpitpaa
wH D 1

UTyMS(I U E

L Td Sy MRT 9L Td Sy MRT s VVURMy T 9L Td Sy MRT wd T) SK) 9L Td Sy MRT wd V(SBT
y Sy MB Wy 9MBU L Td Sy MRT wd V(SBT c y Vd) YSRL y Td Sd
c LSBR(Tc

. R

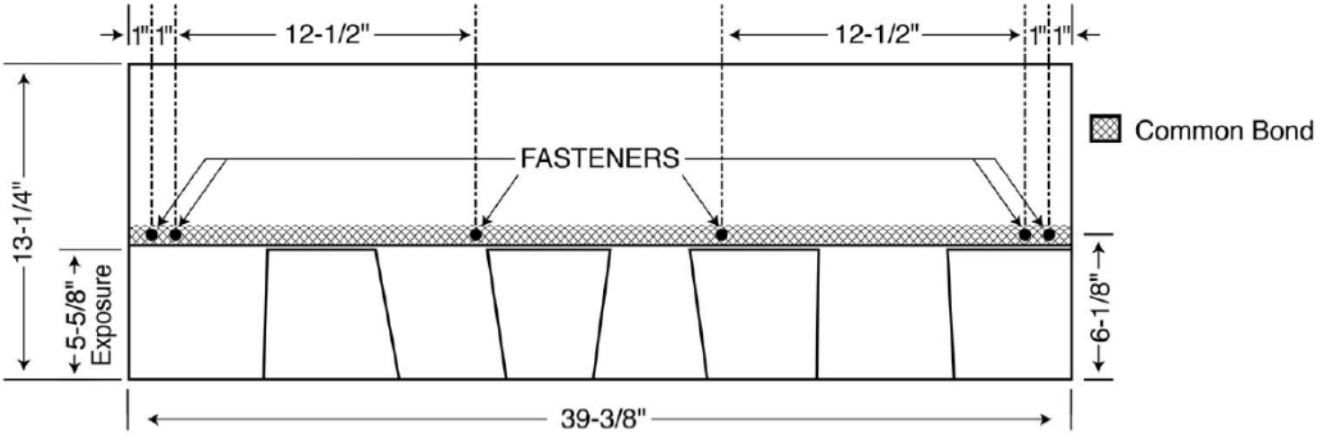

L Td Sy MRT c LSBR(T
2y KcCM(VVcM9M(-

. S

L Vd SJ VBy M(BMS(cwMCSBR SB MCCVd UMBCTs Sy L YSRxr Vd YSRxax
u Td y SCM(BMS(cwMCSBR M((Vs TU MBhs L Td Ts Sy LSB BMS(J VBTx

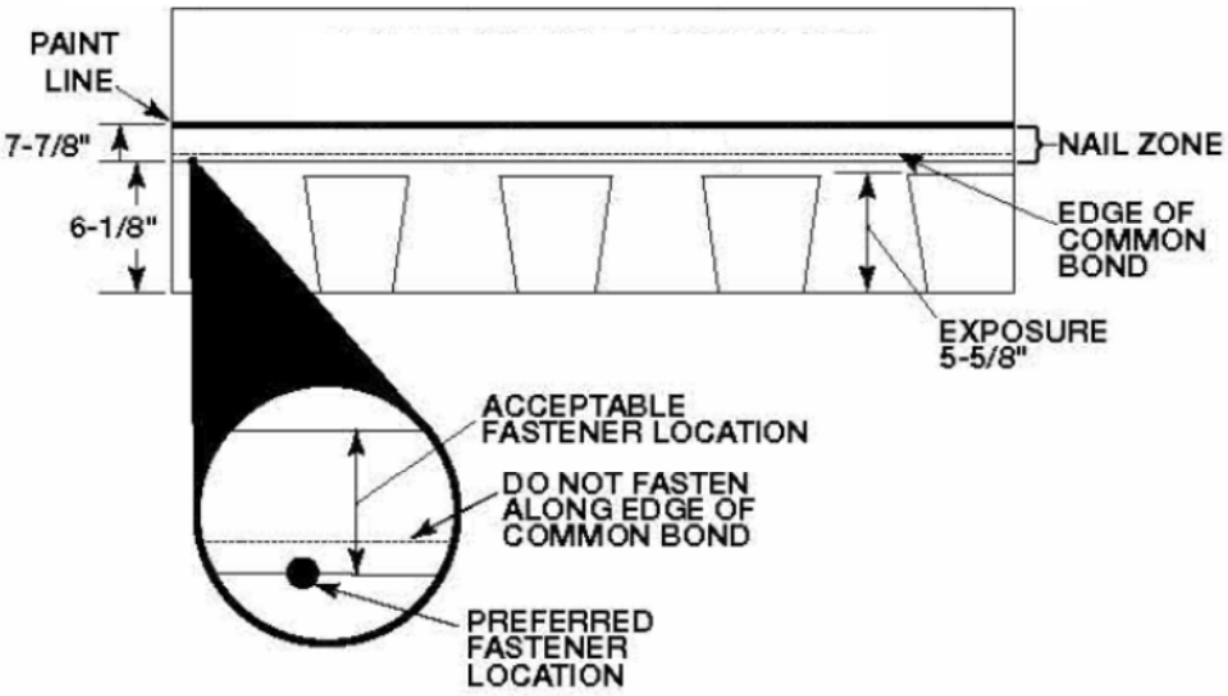

MIAMI-DADE COUNTY
APPROVED

BVMB xwaaEina5xia
T H UH v rapi rpaD
M H UH vrrpi t pna
wH e 1

L Td Sy MRT wd V(SBT y Sy MB Wy c LSBR(Tc 9MBU L Td Sy MRT wd V(SBT
c y Vd) YSR L y Td Sd
YSR xn M(y Td B My T YMc y TB SBR wMy y Td B
L Vd SJ V By M(BMS(cwMCSBR SB MCCVd UMBCT s Sy L YSR xr Vd YSR xax
u Td y SCM(BMS(cwMCSBR M((Vs TU MBhs L Td T s Sy LSB BMS(J VB Tx

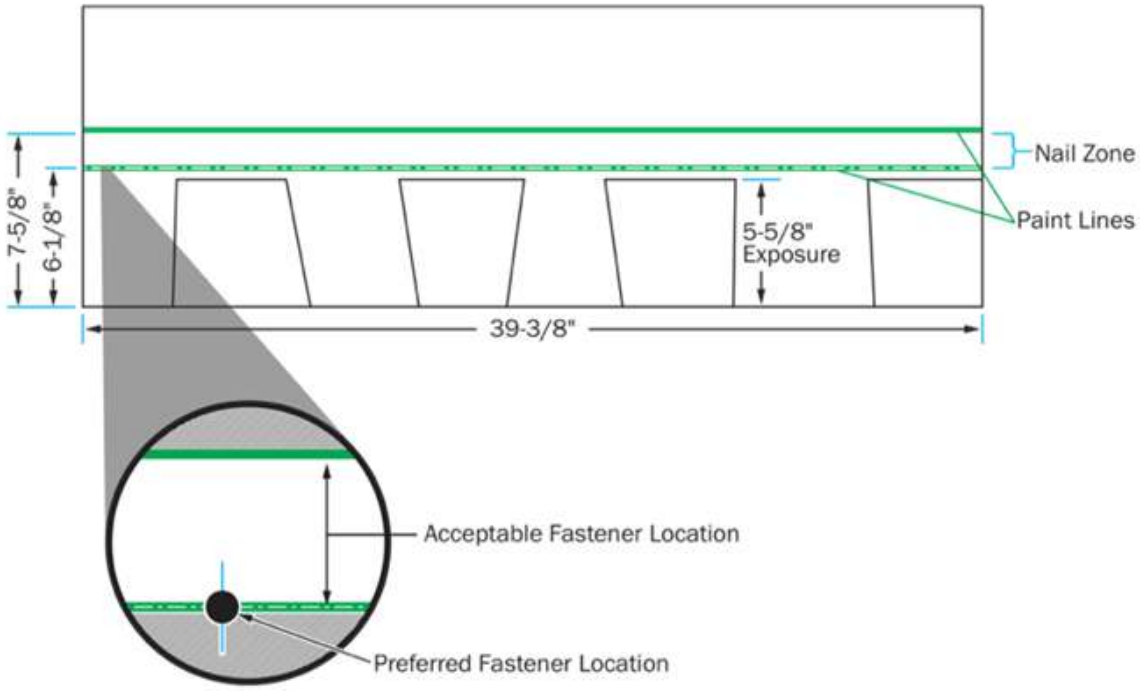

TBU VY y L Sc MCCT wy MB CT