DATE 04/24/2006

Columbia County Building Permit

This Permit Expires One Year From the Date of Issue

PERMIT
000024415

APPLICANT CHARLES PEELER PHONE 752-9576

ADDRESS 2054 SW DAIRY STREET LAKE CITY FL 32024

OWNER CHARLES PEELER PHONE 623-4448

ADDRESS 152 SW GREMLIN WAY LAKE CITY FL 32024

CONTRACTOR CHARLES PEELER PHONE 623-4448

LOCATION OF PROPERTY 247S, TR ON STEVENS RD, TL ON GREMLIN, 2ND LOT ON RIGHT

TYPE DEVELOPMENT SFD,UTILITY ESTIMATED COST OF CONSTRUCTION 68200.00

HEATED FLOOR AREA 1364.00 TOTAL AREA 1781.00 HEIGHT STORIES 1

FOUNDATION CONC WALLS FRAMED ROOF PITCH 5/12 FLOOR SLAB

LAND USE & ZONING A-3 MAX. HEIGHT 18

Minimum Set Back Requirments: STREET-FRONT 30.00 REAR 25.00 SIDE 25.00

NO. EX.D.U. 0 FLOOD ZONE X DEVELOPMENT PERMIT NO.

PARCEL ID 20-4S-16-03079-069 SUBDIVISION SHADY OAKS

LOT 10 BLOCK PHASE UNIT TOTAL ACRES

000001057

Culvert Permit No. | Culvert Waiver | Contractor's License Number | Applicant/Owner/Contractor

WAIVER | 06-0017-N | BK | JH

Driveway Connection | Septic Tank Number | LU & Zoning checked by | Approved for Issuance | New Resident

COMMENTS: ONE FOOT ABOVE THE ROAD, NOC ON FILE
V#0240

Check # or Cash 1319

FOR BUILDING & ZONING DEPARTMENT ONLY

(footer/Slab)

Temporary Power _____ date/app. by | Foundation _____ date/app. by | Monolithic _____ date/app. by

Under slab rough-in plumbing _____ date/app. by | Slab _____ date/app. by | Sheathing/Nailing _____ date/app. by

Framing _____ date/app. by | Rough-in plumbing above slab and below wood floor _____ date/app. by

Electrical rough-in _____ date/app. by | Heat & Air Duct _____ date/app. by | Peri. beam (Lintel) _____ date/app. by

Permanent power _____ date/app. by | C.O. Final _____ date/app. by | Culvert _____ date/app. by

M/H tie downs, blocking, electricity and plumbing _____ date/app. by | Pool _____ date/app. by

Reconnection _____ date/app. by | Pump pole _____ date/app. by | Utility Pole _____ date/app. by

M/H Pole _____ date/app. by | Travel Trailer _____ date/app. by | Re-roof _____ date/app. by

BUILDING PERMIT FEE $ 345.00 CERTIFICATION FEE $ 8.90 SURCHARGE FEE $ 8.90

MISC. FEES $ 0.00 ZONING CERT. FEE $ 50.00 FIRE FEE $ 0.00 WASTE FEE $

FLOOD DEVELOPMENT FEE $ FLOOD ZONE FEE $ 25.00 CULVERT FEE $ **TOTAL FEE** 437.80

INSPECTORS OFFICE CLERKS OFFICE CH

NOTICE: IN ADDITION TO THE REQUIREMENTS OF THIS PERMIT, THERE MAY BE ADDITIONAL RESTRICTIONS APPLICABLE TO THIS PROPERTY THAT MAY BE FOUND IN THE PUBLIC RECORDS OF THIS COUNTY. AND THERE MAY BE ADDITIONAL PERMITS REQUIRED FROM OTHER GOVERNMENTAL ENTITIES SUCH AS WATER MANAGEMENT DISTRICTS, STATE AGENCIES, OR FEDERAL AGENCIES.

"WARNING TO OWNER: YOUR FAILURE TO RECORD A NOTICE OF COMMENCEMENT MAY RESULT IN YOUR PAYING TWICE FOR IMPROVEMENTS TO YOUR PROPERTY. IF YOU INTEND TO OBTAIN FINANCING, CONSULT WITH YOUR LENDER OR AN ATTORNEY BEFORE RECORDING YOUR NOTICE OF COMMENCEMENT."

This Permit Must Be Prominently Posted on Premises During Construction

PLEASE NOTIFY THE COLUMBIA COUNTY BUILDING DEPARTMENT AT LEAST 24 HOURS IN ADVANCE OF EACH INSPECTION, IN ORDER THAT IT MAY BE MADE WITHOUT DELAY OR INCONVIENCE, PHONE 758-1008. THIS PERMIT IS NOT VALID UNLESS THE WORK AUTHORIZED BY IT IS COMMENCED WITHIN 6 MONTHS AFTER ISSUANCE.

The Issuance of this Permit Does Not Waive Compliance by Permittee with Deed Restrictions.

MAP OF BOUNDARY SURVEY

SHOWING LOTS 9 & 10, BLOCK 5 OF SHADY OAKS ACRES UNIT 2, ADDITION, ACCORDING TO THE PLAT THEREOF AS RECORDED IN PLAT BOOK 4, PAGE 34, OF THE PUBLIC RECORDS OF COLUMBIA COUNTY, FLORIDA.

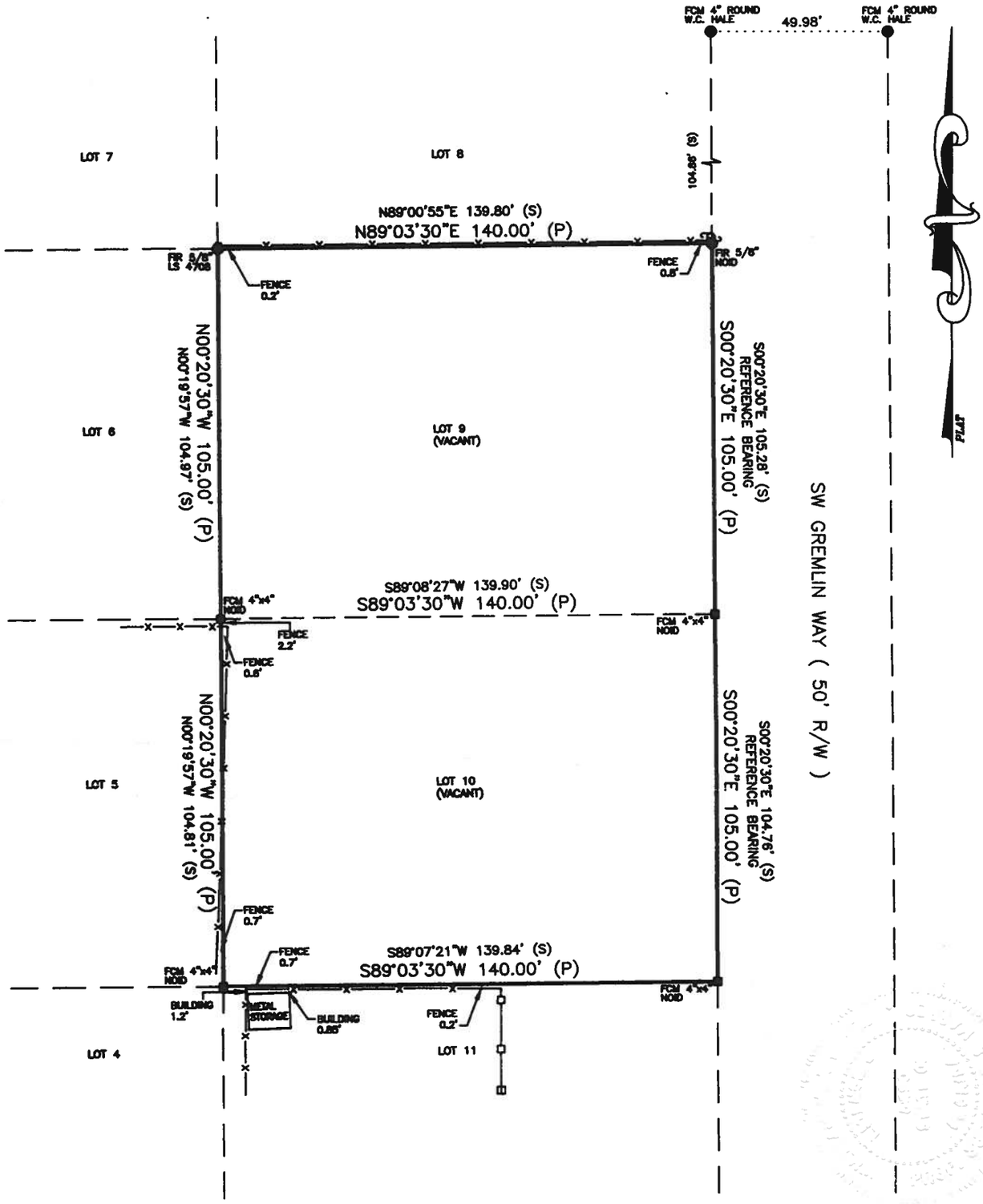

I HEREBY CERTIFY THIS SURVEY WAS DONE UNDER MY DIRECT SUPERVISION AND IT MEETS THE MINIMUM TECHNICAL STANDARDS FOR LAND SURVEYING PURSUANT TO CHAPTER 61G17-6, FLORIDA ADMINISTRATION CODE, CHAPTER 472, FLORIDA STATUES.

WILLIAM N. KITCHEN PSM 5490

William N. Kitchen 11-22-2005

SURVEYORS NOTES

1. BEARING BASED ON PLAT.
2. THIS SURVEY BASED ON LEGAL DESCRIPTION FURNISHED. THE PUBLIC RECORDS, WERE NOT SEARCHED BY THIS SURVEYOR FOR EASEMENTS, TITLE, COVENANTS, RESTRICTIONS, CLOSURES, TAKINGS OR ORDINANCES, ETC., THERE COULD BE OTHER MATTER OF RECORD THAT EFFECT THIS PARCEL.

CERTIFIED TO:
CHARLES PEELER

NOT VALID WITHOUT THE SIGNATURE AND THE ORIGINAL RAISED SEAL OF A FLORIDA LICENSED SURVEYOR AND MAPPER.

REV:		
WILLIAM N. KITCHEN PROFESSIONAL SURVEYOR AND MAPPER 152 N MARION AVENUE LAKE CITY, FLORIDA 32055 PHONE (386) 755-7786	DRAWN BY: RI	FIELD BOOK: 05489
	SCALE: 1" = 40'	
	SURVEY DATE: NOVEMBER 18, 2005	
	JOB NUMBER	SHEET
CLIENT: CHARLES PEELER	05489	1 OF 1

LEGEND

(P) = PLAT
(S) = SURVEY MEASUREMENT
NOID = NO SURVEYORS IDENTIFICATION
LS = LAND SURVEYOR
FCM = FOUND CONCRETE MONUMENT
FIR = FOUND IRON ROD
PRM = PERMANENT REFERENCE MONUMENT
R/W = RIGHT OF WAY

□---□ = WOOD FENCE
X --- X = WIRE FENCE
○ = POWER POLE

451.00 CR 1319 Columbia County Building Permit Application CR 11318 — Revised 5-23-04

For Office Use Only Application # 0601-28 Date Received LH By 1/10/06 Permit # 10571 / 24415

Application Approved by - Zoning Official ... Date ____ Plans Examiner OK JTH Date 1-17-05

Flood Zone X Development Permit N/A Zoning A-3 Land Use Plan Map Category A-3

Comments Section 2.3.1 Side Setbacks 25' Needs to Apply for Variance (NOC)

Applicants Name Charles Beeler Phone 752-9576

Address 2054 SW Dairy St Lake City, Fl. 32024 623-4448

Owners Name Same Phone

911 Address 152 SW Gremlin Way Lake City Fl 32024

Contractors Name Charles Beeler Phone 752-9576

Address 2054 SW Dairy St. Lake City Fl. 32024 623-4448

Fee Simple Owner Name & Address Charles Beeler

Bonding Co. Name & Address None

Architect/Engineer Name & Address Jack Dasoway P.O. Box 568 Lake City 32026

Mortgage Lenders Name & Address Mercantile Bank, Lake City, Fl.

Circle the correct power company - FL Power & Light - Clay Elec. - Suwannee Valley Elec. - Progressive Energy

Property ID Number R03079-069 (20-4S-16) Estimated Cost of Construction 100,000.00

Subdivision Name Shady Oaks Acres Lot 10 Block 5 Unit 2 Phase ____

Driving Directions Hwy 247 South to Hwy 242 on Right behind 545 Store

Type of Construction Residential Number of Existing Dwellings on Property 0

Total Acreage 3.3 Lot Size ____ Do you need a - Culvert Permit or Culvert Waiver or Have an Existing Drive

Actual Distance of Structure from Property Lines - Front 30 Side 20 Side 20 Rear 75

Total Building Height 18' Number of Stories 1 Heated Floor Area 1364 Roof Pitch 5/12

Porch 124 Garage 293 TOTAL 1781

Application is hereby made to obtain a permit to do work and installations as indicated. I certify that no work or installation has commenced prior to the issuance of a permit and that all work be performed to meet the standards of all laws regulating construction in this jurisdiction.

OWNERS AFFIDAVIT: I hereby certify that all the foregoing information is accurate and all work will be done in compliance with all applicable laws and regulating construction and zoning.

WARNING TO OWNER: YOUR FAILURE TO RECORD A NOTICE OF COMMENCMENT MAY RESULT IN YOU PAYING TWICE FOR IMPROVEMENTS TO YOUR PROPERTY. IF YOU INTEND TO OBTAIN FINANCING, CONSULT WITH YOUR LENDER OR ATTORNEY BEFORE RECORDING YOUR NOTICE OF COMMENCEMENT.

Owner Builder or Agent (Including Contractor)

Contractor Signature

Contractors License Number RB0064075

Competency Card Number

NOTARY STAMP/SEAL

STATE OF FLORIDA
COUNTY OF COLUMBIA

Sworn to (or affirmed) and subscribed before me this 10th day of January 2006.

Personally known ✓ or Produced Identification ____

Notary Signature

Application for Onsite Sewage Disposal System Construction Permit. Part II Site Plan

Permit Application Number: 06-0017N

ALL CHANGES MUST BE APPROVED BY THE COUNTY HEALTH UNIT

PEELER/CR 04-2314

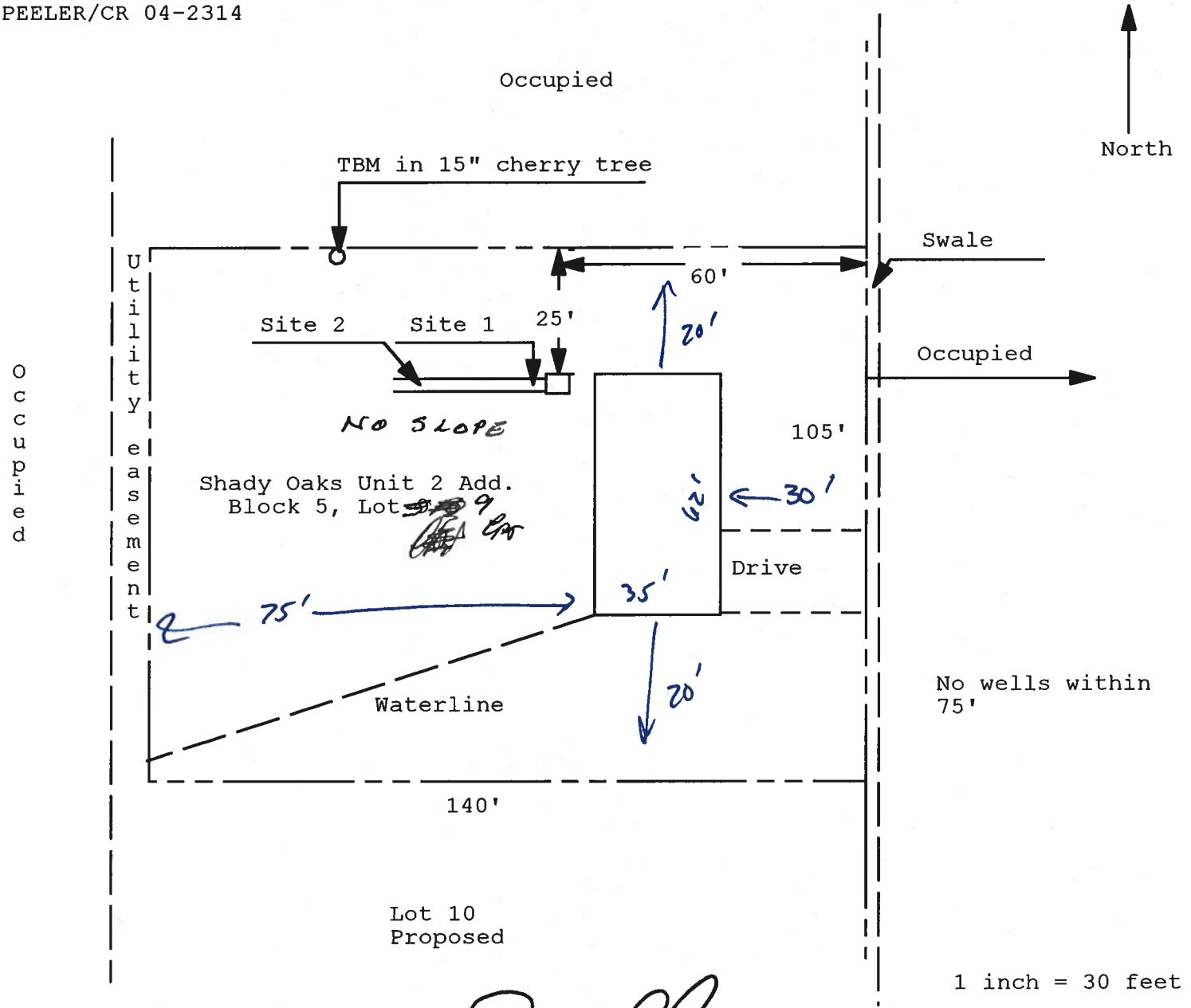

Site Plan Submitted By Paul Lloyd **Date** 9/27/04

Plan Approved ✓ **Not Approved** ____ **Date** ~~9/27/04~~ 1-10-06

By [signature] Columbia **CPHU**

Notes: ____

Columbia County Tax Collector

Site Provided by...
governmax.com T1.11

Tax Record

print Account Number
1 of 1

Details
Tax Record
» Print View
Shopping Cart
License Renewal
Property Info ➡

Searches
Account Number
Owner Name
Mailing Address

Site Functions
Welcome
Tax Search
Occupational Lic.
Contact Us
Online Help
Home

DATA VIEW AS OF: 1/2/2006 8:18:22 AM ET

Ad Valorem Taxes and Non-Ad Valorem Assessments

The information contained herein does not constitute a title search and should not be relied on as such.

Account Number	Tax Type	Tax Year
R03079-069	Real Estate	2005

Mailing Address
PEELER CHARLES
2806 W US 90 SUITE 101
LAKE CITY FL 32055

Folio
110920.0000

Assessed Value	Exempt Amount	Taxable Value
$4,500.00	$0.00	$4,500.00

Exemption Detail
NO EXEMPTIONS

Millage Rate
003 19.06040

Legal Description
LOT 10 BLOCK 5 SHADY OAKS ACRES UNIT 2 ADDITION. 965-1621, WD 1016-1535.

Tax Districts Detail

Code	Description	Exemption	Amount
C001	BOARD OF COUNTY COMMISSIONERS	$0.00	$39.27
S002	COLUMBIA COUNTY SCHOOL BOARD	$0.00	$35.80
W SR	SUWANNEE RIVER WATER MGT DIST	$0.00	$2.21
HLSH	LAKE SHORE HOSPITAL AUTH	$0.00	$7.88
IIDA	INDUSTRIAL DEVELOPEMENT AUTH	$0.00	$0.62
FFIR	FIRE ASSESSMENTS	$0.00	$0.00

Total Gross	$85.78
Discount	($2.57)
Total	$83.21

If Paid By	Amount Due
01/26/2006	$83.21
01/31/2006	$84.06

Prior Year Taxes Due

NO DELINQUENT TAXES

Click Here To Pay Now

152 SW Gremlin Way

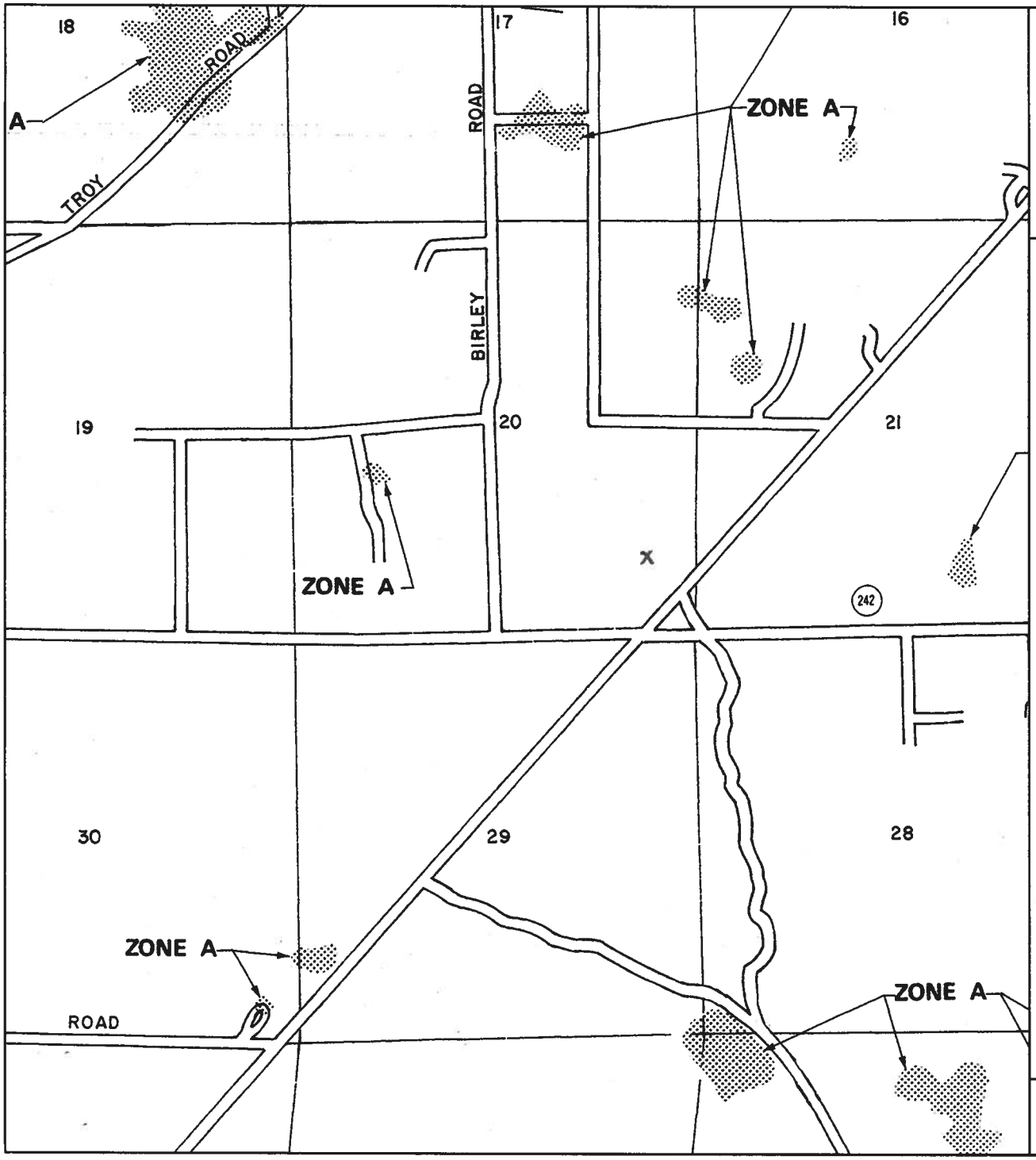

APPROXIMATE SCALE IN FEET

2000 0 2000

NATIONAL FLOOD INSURANCE PROGRAM

FIRM
FLOOD INSURANCE RATE MAP

COLUMBIA COUNTY, FLORIDA
(UNINCORPORATED AREAS)

PANEL 175 OF 290

PANEL LOCATION

COMMUNITY-PANEL NUMBER
120070 0175 B

EFFECTIVE DATE:
JANUARY 6, 1988

Federal Emergency Management Agency

This is an official copy of a portion of the above referenced flood map. It was extracted using F-MIT Version 1.0. This map does not reflect changes or amendments which may have been made subsequent to the date on the title block. Futher information about National Flood Insurance Program flood hazard maps is available at www.fema.gov/mit/tsd.

Print Date: 1/13/2006 (printed at scale and type A)

Columbia County Property Appraiser

J. Doyle Crews, CFA - Lake City, Florida - 386-758-1083

PARCEL: 20-4S-16-03079-069 - WASTELAND/ (009600)

LOT 10 BLOCK 5 SHADY OAKS ACRES UNIT 2 ADDITION. 965-1621, WD 1016-1535.

Name:	PEELER CHARLES	LandVal	$4,500.00
Site:	BARROW PIT	BldgVal	$0.00
Mail:	2806 W US 90 SUITE 101 LAKE CITY, FL 32055	ApprVal	$4,500.00
		JustVal	$4,500.00
Sales Info	5/19/2004 $10,000.00V / Q	Assd	$4,500.00
	10/23/2002 $5,000.00V / Q	Exmpt	$0.00
		Taxable	$4,500.00

0 120 240 360 ft

N W E S

This information, GIS Map Updated: 8/3/2005, was derived from data which was compiled by the Columbia County Property Appraiser Office solely for the governmental purpose of property assessment. This information should not be relied upon by anyone as a determination of the ownership of property or market value. No warranties, expressed or implied, are provided for the accuracy of the data herein, it's use, or it's interpretation. Although it is periodically updated, this information may not reflect the data currently on file in the Property Appraiser's office. The assessed values are NOT certified values and therefore are subject to change before being finalized for ad valorem assessment purposes.

NOTICE OF COMMENCEMENT FORM
COLUMBIA COUNTY, FLORIDA

******THIS DOCUMENT MUST BE RECORDED AT THE COUNTY CLERKS OFFICE BEFORE YOUR FIRST INSPECTION.******

THE UNDERSIGNED hereby gives notice that improvement will be made to certain real property, and in accordance with Chapter 713, Florida Statutes, the following information is provided in this Notice of Commencement.

Tax Parcel ID Number R03079-069 20-4S-16 **PERMIT NUMBER** _____

1. **Description of property: (legal description of the property and street address or 911 address)**
   Lot 10 Block 5 unit 2, Shady Oaks Acres
   152 SW Gremlin Way
   Lake City, Fl. 32024

2. **General description of improvement:** New Home

3. **Owner Name & Address** Charles Reeder 2054 SW Dairy St. Lake City Fl. 32024 **Interest in Property** ~~100%~~ 100%

4. **Name & Address of Fee Simple Owner (if other than owner):** _____

5. **Contractor Name** Charles Reeder Const. **Phone Number** 386-627-4448
   Address 2054 SW Dairy St. Lake City, Fl. 32024

6. **Surety Holders Name** _____ **Phone Number** _____
   Address _____
   Amount of Bond _____

7. **Lender Name** Mercantile Bank **Phone Number** 752-5021
   Address 187 SW Baya ~~Ave~~ DR. Lake City, Fl. 32055

8. **Persons within the State of Florida designated by the Owner upon whom notices or other documents may be served as provided by section 718.13 (1)(a) 7; Florida Statutes:**
   Name Shirley H. Ison **Phone Number** 754-4663
   Address 2218 US Hwy 90 West Lake City, Fl. 32055

9. **In addition to himself/herself the owner designates** _____ **of** _____ **to receive a copy of the Lienor's Notice as provided in Section 713.13 (1) – (a) 7. Phone Number of the designee** _____

10. **Expiration date of the Notice of Commencement (the expiration date is 1 (one) year from the date of recording, (Unless a different date is specified)** _____

NOTICE AS PER CHAPTER 713, Florida Statutes:
The owner must sign the notice of commencement and no one else may be permitted to sign in his/her stead.

Signature of Owner

Sworn to (or affirmed) and subscribed before 21st **day of** April, **20**06

NOTARY STAMP/SEAL
DALE ERDER
MY COMMISSION # DD 333586
EXPIRES: June 28, 2008
Bonded Thru Notary Public Underwriters

Signature of Notary

Inst:2006009757 Date:04/21/2006 Time:13:22
DC,P.DeWitt Cason,Columbia County B:1081 P:808

FORM 600A-2004 EnergyGauge® 4.0

FLORIDA ENERGY EFFICIENCY CODE FOR BUILDING CONSTRUCTION

Florida Department of Community Affairs

Residential Whole Building Performance Method A

Project Name:	511232HitsonShirley	Builder:	Charles Peeler
Address:	Lot: 10, Sub: Shady Oaks S/D, Plat:	Permitting Office:	Columbia
City, State:	, FL	Permit Number:	24415
Owner:	Spec House	Jurisdiction Number:	221000
Climate Zone:	North		

1. New construction or existing	New	
2. Single family or multi-family	Single family	
3. Number of units, if multi-family	1	
4. Number of Bedrooms	3	
5. Is this a worst case?	Yes	
6. Conditioned floor area (ft²)	1364 ft²	
7. Glass type[1] and area: (Label reqd. by 13-104.4.5 if not default)		
a. U-factor: (or Single or Double DEFAULT) 7a.	Description Area (Dble Default) 133.0 ft²	
b. SHGC: (or Clear or Tint DEFAULT) 7b.	(Clear) 133.0 ft²	
8. Floor types		
a. Slab-On-Grade Edge Insulation	R=0.0, 172.0(p) ft	
b. N/A		
c. N/A		
9. Wall types		
a. Frame, Wood, Exterior	R=13.0, 1118.0 ft²	
b. Frame, Wood, Adjacent	R=13.0, 156.0 ft²	
c. N/A		
d. N/A		
e. N/A		
10. Ceiling types		
a. Under Attic	R=30.0, 1388.0 ft²	
b. N/A		
c. N/A		
11. Ducts		
a. Sup: Unc. Ret: Unc. AH: Garage	Sup. R=6.0, 150.0 ft	
b. N/A		
12. Cooling systems		
a. Central Unit	Cap: 30.0 kBtu/hr	
	SEER: 12.00	
b. N/A		
c. N/A		
13. Heating systems		
a. Electric Heat Pump	Cap: 30.0 kBtu/hr	
	HSPF: 7.60	
b. N/A		
c. N/A		
14. Hot water systems		
a. Electric Resistance	Cap: 40.0 gallons	
	EF: 0.93	
b. N/A		
c. Conservation credits (HR-Heat recovery, Solar DHP-Dedicated heat pump)		
15. HVAC credits (CF-Ceiling fan, CV-Cross ventilation, HF-Whole house fan, PT-Programmable Thermostat, MZ-C-Multizone cooling, MZ-H-Multizone heating)		

Glass/Floor Area: 0.16

Total as-built points: 22741
Total base points: 22792

PASS

I hereby certify that the plans and specifications covered by this calculation are in compliance with the Florida Energy Code.

PREPARED BY: Ben [signature]

DATE: 12-8-05

I hereby certify that this building, as designed, is in compliance with the Florida Energy Code.

OWNER/AGENT: _____

DATE: _____

Review of the plans and specifications covered by this calculation indicates compliance with the Florida Energy Code. Before construction is completed this building will be inspected for compliance with Section 553.908 Florida Statutes.

GREAT SEAL OF THE STATE OF FLORIDA — IN GOD WE TRUST

BUILDING OFFICIAL: _____

DATE: _____

1 Predominant glass type. For actual glass type and areas, see Summer & Winter Glass output on pages 2&4.

SUMMER CALCULATIONS

Residential Whole Building Performance Method A - Details

ADDRESS: **Lot: 10, Sub: Shady Oaks S/D, Plat: , , FL,** PERMIT #:

BASE

GLASS TYPES

.18 X	Conditioned Floor Area	X BSPM	= Points
.18	1364.0	20.04	4920.2

AS-BUILT

Type/SC	Overhang Ornt	Len	Hgt	Area X	SPM X	SOF	= Points
Double, Clear	E	1.5	3.5	6.0	42.06	0.78	195.7
Double, Clear	E	1.5	5.5	45.0	42.06	0.90	1696.4
Double, Clear	E	1.5	8.0	20.0	42.06	0.96	805.5
Double, Clear	E	1.5	3.5	9.0	42.06	0.78	293.6
Double, Clear	E	1.5	8.0	40.0	42.06	0.96	1611.1
Double, Clear	W	6.0	5.5	15.0	38.52	0.51	293.9
Double, Clear	W	6.0	8.0	7.0	38.52	0.60	162.5
Double, Clear	W	0.0	0.0	60.0	38.52	1.00	2311.4
Double, Clear	W	0.0	0.0	6.0	38.52	1.00	231.1
Double, Clear	N	1.5	5.5	10.0	19.20	0.93	178.2
As-Built Total:				**218.0**			**7779.5**

WALL TYPES	Area X	BSPM	= Points
Adjacent	156.0	0.70	109.2
Exterior	1118.0	1.70	1900.6
Base Total:	**1274.0**		**2009.8**

Type	R-Value	Area X	SPM	= Points
Frame, Wood, Exterior	13.0	1118.0	1.50	1677.0
Frame, Wood, Adjacent	13.0	156.0	0.60	93.6
As-Built Total:		**1274.0**		**1770.6**

DOOR TYPES	Area X	BSPM	= Points
Adjacent	20.0	2.40	48.0
Exterior	40.0	6.10	244.0
Base Total:	**60.0**		**292.0**

Type	Area X	SPM	= Points
Exterior Insulated	20.0	4.10	82.0
Exterior Insulated	20.0	4.10	82.0
Adjacent Insulated	20.0	1.60	32.0
As-Built Total:	**60.0**		**196.0**

CEILING TYPES	Area X	BSPM	= Points
Under Attic	1364.0	1.73	2359.7
Base Total:	**1364.0**		**2359.7**

Type	R-Value	Area X	SPM X SCM	= Points
Under Attic	30.0	1388.0	1.73 X 1.00	2401.2
As-Built Total:		**1388.0**		**2401.2**

FLOOR TYPES	Area X	BSPM	= Points
Slab	172.0(p)	-37.0	-6364.0
Raised	0.0	0.00	0.0
Base Total:			**-6364.0**

Type	R-Value	Area X	SPM	= Points
Slab-On-Grade Edge Insulation	0.0	172.0(p	-41.20	-7086.4
As-Built Total:		**172.0**		**-7086.4**

INFILTRATION	Area X	BSPM	= Points
	1364.0	10.21	13926.4

	Area X	SPM	= Points
	1364.0	10.21	13926.4

SUMMER CALCULATIONS

Residential Whole Building Performance Method A - Details

ADDRESS: **Lot: 10, Sub: Shady Oaks S/D, Plat: , , FL,** PERMIT #:

BASE				AS-BUILT							
Summer Base Points: 17144.2				**Summer As-Built Points:**							**18987.4**
Total Summer Points	X System Multiplier	=	Cooling Points	Total Component (System - Points)	X Cap Ratio	X Duct Multiplier (DM x DSM x AHU)	X System Multiplier	X Credit Multiplier	= Cooling Points		
				(sys 1: Central Unit 30000 btuh ,SEER/EFF(12.0) Ducts:Unc(S),Unc(R),Gar(AH),R6.0(INS)							
				18987	1.00	(1.09 x 1.147 x 1.00)	0.284	1.000	6751.7		
17144.2	**0.4266**		**7313.7**	**18987.4**	**1.00**	**1.250**	**0.284**	**1.000**	**6751.7**		

WINTER CALCULATIONS

Residential Whole Building Performance Method A - Details

ADDRESS: **Lot: 10, Sub: Shady Oaks S/D, Plat: , , FL,** PERMIT #:

BASE

GLASS TYPES .18 X Conditioned Floor Area	X BWPM	= Points
.18 1364.0	12.74	3127.9

AS-BUILT

Type/SC	Overhang Ornt	Len	Hgt	Area	X WPM	X WOF	= Points
Double, Clear	E	1.5	3.5	6.0	18.79	1.09	123.3
Double, Clear	E	1.5	5.5	45.0	18.79	1.04	880.6
Double, Clear	E	1.5	8.0	20.0	18.79	1.02	383.3
Double, Clear	E	1.5	3.5	9.0	18.79	1.09	185.0
Double, Clear	E	1.5	8.0	40.0	18.79	1.02	766.6
Double, Clear	W	6.0	5.5	15.0	20.73	1.18	365.9
Double, Clear	W	6.0	8.0	7.0	20.73	1.13	164.6
Double, Clear	W	0.0	0.0	60.0	20.73	1.00	1243.7
Double, Clear	W	0.0	0.0	6.0	20.73	1.00	124.4
Double, Clear	N	1.5	5.5	10.0	24.58	1.00	246.5
As-Built Total:				**218.0**			**4484.0**

WALL TYPES	Area	X BWPM	= Points
Adjacent	156.0	3.60	561.6
Exterior	1118.0	3.70	4136.6
Base Total:	**1274.0**		**4698.2**

Type	R-Value	Area	X WPM	= Points
Frame, Wood, Exterior	13.0	1118.0	3.40	3801.2
Frame, Wood, Adjacent	13.0	156.0	3.30	514.8
As-Built Total:		**1274.0**		**4316.0**

DOOR TYPES	Area	X BWPM	= Points
Adjacent	20.0	11.50	230.0
Exterior	40.0	12.30	492.0
Base Total:	**60.0**		**722.0**

Type	Area	X WPM	= Points
Exterior Insulated	20.0	8.40	168.0
Exterior Insulated	20.0	8.40	168.0
Adjacent Insulated	20.0	8.00	160.0
As-Built Total:	**60.0**		**496.0**

CEILING TYPES	Area	X BWPM	= Points
Under Attic	1364.0	2.05	2796.2
Base Total:	**1364.0**		**2796.2**

Type	R-Value	Area	X WPM X WCM	= Points
Under Attic	30.0	1388.0	2.05 X 1.00	2845.4
As-Built Total:		**1388.0**		**2845.4**

FLOOR TYPES	Area	X BWPM	= Points
Slab	172.0(p)	8.9	1530.8
Raised	0.0	0.00	0.0
Base Total:			**1530.8**

Type	R-Value	Area	X WPM	= Points
Slab-On-Grade Edge Insulation	0.0	172.0(p	18.80	3233.6
As-Built Total:		**172.0**		**3233.6**

INFILTRATION	Area	X BWPM	= Points
	1364.0	-0.59	-804.8

	Area	X WPM	= Points
	1364.0	-0.59	-804.8

WINTER CALCULATIONS

Residential Whole Building Performance Method A - Details

ADDRESS: **Lot: 10, Sub: Shady Oaks S/D, Plat: , , FL,** PERMIT #:

BASE			AS-BUILT						
Winter Base Points:		**12070.4**	**Winter As-Built Points:**						**14570.2**
Total Winter Points	X System Multiplier	= Heating Points	Total Component (System - Points)	X Cap Ratio	X Duct Multiplier (DM x DSM x AHU)	X System Multiplier	X Credit Multiplier	= Heating Points	
			(sys 1: Electric Heat Pump 30000 btuh ,EFF(7.6) Ducts:Unc(S),Unc(R),Gar(AH),R6.0						
			14570.2	1.000	(1.069 x 1.169 x 1.00)	0.449	1.000	8169.6	
12070.4	**0.6274**	**7572.9**	**14570.2**	**1.00**	**1.250**	**0.449**	**1.000**	**8169.6**	

WATER HEATING & CODE COMPLIANCE STATUS

Residential Whole Building Performance Method A - Details

ADDRESS: **Lot: 10, Sub: Shady Oaks S/D, Plat: , , FL,** PERMIT #:

BASE					AS-BUILT							
WATER HEATING												
Number of Bedrooms	X	Multiplier	=	Total	Tank Volume	EF	Number of Bedrooms	X	Tank Ratio	X Multiplier	X Credit Multiplier	= Total
3		2635.00		7905.0	40.0	0.93	3		1.00	2606.67	1.00	7820.0
					As-Built Total:							**7820.0**

CODE COMPLIANCE STATUS

BASE				AS-BUILT			
Cooling Points +	Heating Points +	Hot Water Points =	Total Points	Cooling Points +	Heating Points +	Hot Water Points =	Total Points
7314	**7573**	**7905**	**22792**	**6752**	**8170**	**7820**	**22741**

PASS

Code Compliance Checklist

Residential Whole Building Performance Method A - Details

ADDRESS: **Lot: 10, Sub: Shady Oaks S/D, Plat: , , FL,** PERMIT #:

6A-21 INFILTRATION REDUCTION COMPLIANCE CHECKLIST

COMPONENTS	SECTION	REQUIREMENTS FOR EACH PRACTICE	CHECK
Exterior Windows & Doors	606.1.ABC.1.1	Maximum:.3 cfm/sq.ft. window area; .5 cfm/sq.ft. door area.	
Exterior & Adjacent Walls	606.1.ABC.1.2.1	Caulk, gasket, weatherstrip or seal between: windows/doors & frames, surrounding wall; foundation & wall sole or sill plate; joints between exterior wall panels at corners; utility penetrations; between wall panels & top/bottom plates; between walls and floor. EXCEPTION: Frame walls where a continuous infiltration barrier is installed that extends from, and is sealed to, the foundation to the top plate.	
Floors	606.1.ABC.1.2.2	Penetrations/openings >1/8" sealed unless backed by truss or joint members. EXCEPTION: Frame floors where a continuous infiltration barrier is installed that is sealed to the perimeter, penetrations and seams.	
Ceilings	606.1.ABC.1.2.3	Between walls & ceilings; penetrations of ceiling plane of top floor; around shafts, chases, soffits, chimneys, cabinets sealed to continuous air barrier; gaps in gyp board & top plate; attic access. EXCEPTION: Frame ceilings where a continuous infiltration barrier is installed that is sealed at the perimeter, at penetrations and seams.	
Recessed Lighting Fixtures	606.1.ABC.1.2.4	Type IC rated with no penetrations, sealed; or Type IC or non-IC rated, installed inside a sealed box with 1/2" clearance & 3" from insulation; or Type IC rated with < 2.0 cfm from conditioned space, tested.	
Multi-story Houses	606.1.ABC.1.2.5	Air barrier on perimeter of floor cavity between floors.	
Additional Infiltration reqts	606.1.ABC.1.3	Exhaust fans vented to outdoors, dampers; combustion space heaters comply with NFPA, have combustion air.	

6A-22 OTHER PRESCRIPTIVE MEASURES (must be met or exceeded by all residences.)

COMPONENTS	SECTION	REQUIREMENTS	CHECK
Water Heaters	612.1	Comply with efficiency requirements in Table 612.1.ABC.3.2. Switch or clearly marked circuit breaker (electric) or cutoff (gas) must be provided. External or built-in heat trap required.	
Swimming Pools & Spas	612.1	Spas & heated pools must have covers (except solar heated). Non-commercial pools must have a pump timer. Gas spa & pool heaters must have a minimum thermal efficiency of 78%.	
Shower heads	612.1	Water flow must be restricted to no more than 2.5 gallons per minute at 80 PSIG.	
Air Distribution Systems	610.1	All ducts, fittings, mechanical equipment and plenum chambers shall be mechanically attached, sealed, insulated, and installed in accordance with the criteria of Section 610. Ducts in unconditioned attics: R-6 min. insulation.	
HVAC Controls	607.1	Separate readily accessible manual or automatic thermostat for each system.	
Insulation	604.1, 602.1	Ceilings-Min. R-19. Common walls-Frame R-11 or CBS R-3 both sides. Common ceiling & floors R-11.	

ENERGY PERFORMANCE LEVEL (EPL) DISPLAY CARD

ESTIMATED ENERGY PERFORMANCE SCORE* = 82.5

The higher the score, the more efficient the home.

Spec House, Lot: 10, Sub: Shady Oaks S/D, Plat: , , FL,

1. New construction or existing	New	
2. Single family or multi-family	Single family	
3. Number of units, if multi-family	1	
4. Number of Bedrooms	3	
5. Is this a worst case?	Yes	
6. Conditioned floor area (ft²)	1364 ft²	
7. Glass type[1] and area: (Label reqd. by 13-104.4.5 if not default)		
a. U-factor: (or Single or Double DEFAULT) 7a.	Description Area (Dble Default) 133.0 ft²	
b. SHGC: (or Clear or Tint DEFAULT) 7b.	(Clear) 133.0 ft²	
8. Floor types		
a. Slab-On-Grade Edge Insulation	R=0.0, 172.0(p) ft	
b. N/A		
c. N/A		
9. Wall types		
a. Frame, Wood, Exterior	R=13.0, 1118.0 ft²	
b. Frame, Wood, Adjacent	R=13.0, 156.0 ft²	
c. N/A		
d. N/A		
e. N/A		
10. Ceiling types		
a. Under Attic	R=30.0, 1388.0 ft²	
b. N/A		
c. N/A		
11. Ducts		
a. Sup: Unc. Ret: Unc. AH: Garage	Sup. R=6.0, 150.0 ft	
b. N/A		
12. Cooling systems		
a. Central Unit	Cap: 30.0 kBtu/hr	
	SEER: 12.00	
b. N/A		
c. N/A		
13. Heating systems		
a. Electric Heat Pump	Cap: 30.0 kBtu/hr	
	HSPF: 7.60	
b. N/A		
c. N/A		
14. Hot water systems		
a. Electric Resistance	Cap: 40.0 gallons	
	EF: 0.93	
b. N/A		
c. Conservation credits (HR-Heat recovery, Solar DHP-Dedicated heat pump)		
15. HVAC credits (CF-Ceiling fan, CV-Cross ventilation, HF-Whole house fan, PT-Programmable Thermostat, MZ-C-Multizone cooling, MZ-H-Multizone heating)		

I certify that this home has complied with the Florida Energy Efficiency Code For Building Construction through the above energy saving features which will be installed (or exceeded) in this home before final inspection. Otherwise, a new EPL Display Card will be completed based on installed Code compliant features.

Builder Signature: _____ Date: _____

Address of New Home: _____ City/FL Zip: _____

**NOTE: The home's estimated energy performance score is only available through the FLA/RES computer program. This is not a Building Energy Rating. If your score is 80 or greater (or 86 for a US EPA/DOE EnergyStar™ designation), your home may qualify for energy efficiency mortgage (EEM) incentives if you obtain a Florida Energy Gauge Rating. Contact the Energy Gauge Hotline at 321/638-1492 or see the Energy Gauge web site at www.fsec.ucf.edu for information and a list of certified Raters. For information about Florida's Energy Efficiency Code For Building Construction, contact the Department of Community Affairs at 850/487-1824.*

1 Predominant glass type. For actual glass type and areas, see Summer & Winter Glass output on pages 2&4.

EnergyGauge® (Version: FLRCSB v4.0)

BUILDING INPUT SUMMARY REPORT

PROJECT

Title:	511232HitsonShirley	**Family Type:**	Single	**Address Type:**	Lot Information
Owner:	Spec House	**New/Existing:**	New	**Lot #:**	10
# of Units:	1	**Bedrooms:**	3	**Subdivision:**	Shady Oaks S/D
Builder Name:	(blank)	**Conditioned Area:**	1364	**Platbook:**	(blank)
Climate:	North	**Total Stories:**	1	**Street:**	N/A
Permit Office:	(blank)	**Worst Case:**	Yes	**County:**	Columbia
Jurisdiction #:	(blank)	**Rotate Angle:**	0	**City, St, Zip:**	, FL,

FLOORS

#	Floor Type	R-Val	Area/Perimeter	Units
1	Slab-On-Grade Edge Insulation	0.0	172.0(p) ft	1

DOORS

#	Door Type	Orientation	Area	Units
1	Insulated	Exterior	10.0 ft²	2
2	Insulated	Exterior	20.0 ft²	1
3	Insulated	Adjacent	20.0 ft²	1

CEILINGS

#	Ceiling Type	R-Val	Area	Base Area	Units
1	Under Attic	30.0	1388.0 ft²	1364.0 ft²	1

Credit Multipliers: None

COOLING

#	System Type	Efficiency	Capacity
1	Central Unit	SEER: 12.00	30.0 kBtu/hr

Credit Multipliers: None

WALLS

#	Wall Type	Location	R-Val	Area	Units
1	Frame - Wood	Exterior	13.0	1118.0 ft²	1
2	Frame - Wood	Adjacent	13.0	156.0 ft²	1

HEATING

#	System Type	Efficiency	Capacity
1	Electric Heat Pump	COP: 7.60	30.0 kBtu/hr

Credit Multipliers: None

WINDOWS

#	Panes	Tint	Ornt	Area	OH Length	OH Hght	Units
1	Double	Clear	N	6.0 ft²	1.5 ft	3.5 ft	1
2	Double	Clear	N	15.0 ft²	1.5 ft	5.5 ft	3
3	Double	Clear	N	10.0 ft²	1.5 ft	8.0 ft	2
4	Double	Clear	N	9.0 ft²	1.5 ft	3.5 ft	1
5	Double	Clear	N	40.0 ft²	1.5 ft	8.0 ft	1
6	Double	Clear	S	15.0 ft²	6.0 ft	5.5 ft	1
7	Double	Clear	S	7.0 ft²	6.0 ft	8.0 ft	1
8	Double	Clear	S	15.0 ft²	0.0 ft	0.0 ft	4
9	Double	Clear	S	6.0 ft²	0.0 ft	0.0 ft	1
10	Double	Clear	W	10.0 ft²	1.5 ft	5.5 ft	1

DUCTS

#	Supply Location	Return Location	Air Handler Location	Supply R-Val	Supply Length
1	Uncond.	Uncond.	Garage	6.0	150.0 ft

Credit Multipliers: None

WATER

#	System Type	EF	Cap.	Conservation Type	Con. EF
1	Electric Resistance	0.93	40.0	None	0.00

REFR.

#	Use Default?	Annual Operating Cost	Electric Rate
1	Yes	N/A	N/A

Weggie

Columbia County Building Department
Culvert Waiver

Culvert Waiver No.
000001058

DATE: 04/24/2006 BUILDING PERMIT NO. 24417 5

APPLICANT CHARLES PEELER PHONE 752-9576

ADDRESS 2054 SW DAIRY STREET LAKE CITY FL 32024

OWNER CHARLES PEELER PHONE 623-4448

ADDRESS 138 SW GREMLIN WAY LAKE CITY FL 32024

CONTRACTOR CHARLES PEELER PHONE 623-4448

LOCATION OF PROPERTY 247S, TR ON STEVENS RD, TL ON GREMLIN WAY, ~~3RD~~ 2ND LOT ON RIGHT

SUBDIVISION/LOT/BLOCK/PHASE/UNIT SHADY OAKS 10

PARCEL ID # 20-4S-16-03079-068

I HEREBY CERTIFY THAT I UNDERSTAND AND WILL FULLY COMPLY WITH THE DECISION OF THE COLUMBIA COUNTY PUBLIC WORKS DEPARTMENT IN CONNECTION WITH THE HEREIN PROPOSED APPLICATION.

SIGNATURE:

A SEPARATE CHECK IS REQUIRED
MAKE CHECKS PAYABLE TO BCC

Amount Paid 50.00

PUBLIC WORKS DEPARTMENT USE ONLY

I HEREBY CERTIFY THAT I HAVE EXAMINED THIS APPLICATION AND DETERMINED THAT THE CULVERT WAIVER IS:

✓ APPROVED _____ NOT APPROVED - NEEDS A CULVERT PERMIT

COMMENTS: No Culvert Needed - No Ditches Along Roadway

SIGNED: Ken Sweet DATE: 04/28/06

ANY QUESTIONS PLEASE CONTACT THE PUBLIC WORKS DEPARTMENT AT 386-752-5955.

135 NE Hernando Ave., Suite B-21
Lake City, FL 32055
Phone: 386-758-1008 Fax: 386-758-2160

RECEIVED
APR 26 2006
BY:

COLUMBIA COUNTY FLORIDA

GTC DESIGN GROUP

GTC Design Group, LLC
P.O. Box 187
Live Oak, FL 32064
(Phone) 386.362.3678
(Fax) 386.362.6133
cwilliams3@alltel.net

Finish Floor Elevation Certification

Owner: **Hitson Peeler**
2218 US 90 West
Suite 103 Westside Plaza
Lake City, Florida 32055

Description: **Lot 10, Shady Oaks Subdivision**

Parcel ID# **20-4S-16-03079-069**

Foundation Requirements:

For protection against water damage, the minimum finish floor elevation of the proposed structure shall be 12 inches above the existing ground at any point along the perimeter of the proposed structure. In no case shall the finish floor elevation be more than 6 inches below the centerline of the adjacent roadway, SW Gremlin Way.

The ground around the proposed structure shall be graded such as to convey all stormwater runoff away from the proposed structure.

The above elevations are based on the structure's current staked location, approximately +/-50 feet West from SW Gremlin Way.

Chadwick W. Williams
P.E. License Number: 63144
May 5, 2006

244S

Residential System Sizing Calculation

Summary

Spec House

, FL

Project Title:
511232HitsonShirley

Class 3 Rating
Registration No. 0
Climate: North

12/8/2005

Location for weather data: Gainesville - Defaults: Latitude(29) Temp Range(M)
Humidity data: Interior RH (50%) Outdoor wet bulb (77F) Humidity difference(51gr.)

Winter design temperature	31	F	Summer design temperature	93	F
Winter setpoint	70	F	Summer setpoint	75	F
Winter temperature difference	39	F	Summer temperature difference	18	F
Total heating load calculation	**25515**	**Btuh**	**Total cooling load calculation**	**23952**	**Btuh**
Submitted heating capacity	% of calc	Btuh	Submitted cooling capacity	% of calc	Btuh
Total (Electric Heat Pump)	117.6	30000	Sensible (SHR = 0.5)	82.7	15000
Heat Pump + Auxiliary(0.0kW)	117.6	30000	Latent	258.5	15000
			Total (Electric Heat Pump)	125.2	30000

WINTER CALCULATIONS

Winter Heating Load (for 1364 sqft)

Load component			Load	
Window total	218	sqft	6169	Btuh
Wall total	1274	sqft	3715	Btuh
Door total	60	sqft	921	Btuh
Ceiling total	1388	sqft	1804	Btuh
Floor total	172	ft	5435	Btuh
Infiltration	146	cfm	6254	Btuh
Subtotal			**24300**	**Btuh**
Duct loss			1215	Btuh
TOTAL HEAT LOSS			**25515**	**Btuh**

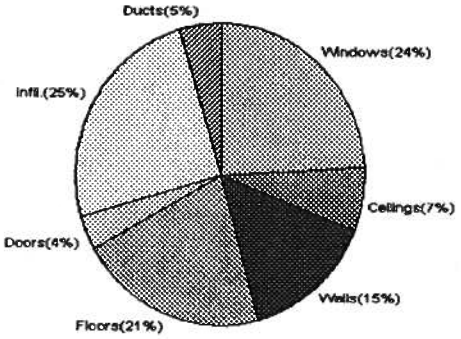

SUMMER CALCULATIONS

Summer Cooling Load (for 1364 sqft)

Load component			Load	
Window total	218	sqft	6286	Btuh
Wall total	1274	sqft	2108	Btuh
Door total	60	sqft	608	Btuh
Ceiling total	1388	sqft	1971	Btuh
Floor total			0	Btuh
Infiltration	128	cfm	2526	Btuh
Internal gain			3000	Btuh
Subtotal(sensible)			**16499**	**Btuh**
Duct gain			1650	Btuh
Total sensible gain			**18148**	**Btuh**
Latent gain(infiltration)			4424	Btuh
Latent gain(internal)			1380	Btuh
Total latent gain			**5804**	**Btuh**
TOTAL HEAT GAIN			**23952**	**Btuh**

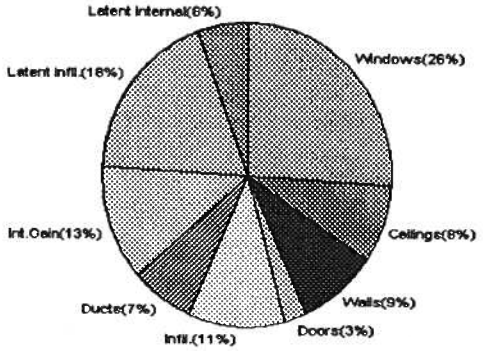

EnergyGauge® System Sizing based on ACCA Manual J.
PREPARED BY: Ben Lucas
DATE: 12-8-05

System Sizing Calculations - Winter

Residential Load - Component Details

Spec House

, FL

Project Title:
511232HitsonShirley

Class 3 Rating
Registration No. 0
Climate: North

Reference City: Gainesville (Defaults) Winter Temperature Difference: 39.0 F

12/8/2005

Window	Panes/SHGC/Frame/U	Orientation	Area X	HTM=	Load
1	2, Clear, Metal, DEF	N	6.0	28.3	170 Btuh
2	2, Clear, Metal, DEF	N	45.0	28.3	1274 Btuh
3	2, Clear, Metal, DEF	N	20.0	28.3	566 Btuh
4	2, Clear, Metal, DEF	N	9.0	28.3	255 Btuh
5	2, Clear, Metal, DEF	N	40.0	28.3	1132 Btuh
6	2, Clear, Metal, DEF	S	15.0	28.3	424 Btuh
7	2, Clear, Metal, DEF	S	7.0	28.3	198 Btuh
8	2, Clear, Metal, DEF	S	60.0	28.3	1698 Btuh
9	2, Clear, Metal, DEF	S	6.0	28.3	170 Btuh
10	2, Clear, Metal, DEF	W	10.0	28.3	283 Btuh
	Window Total		218		6169 Btuh
Walls	Type	R-Value	Area X	HTM=	Load
1	Frame - Exterior	13.0	1118	3.1	3466 Btuh
2	Frame - Adjacent	13.0	156	1.6	250 Btuh
	Wall Total		1274		3715 Btuh
Doors	Type		Area X	HTM=	Load
1	Insulated - Exter		20	18.3	367 Btuh
2	Insulated - Exter		20	18.3	367 Btuh
3	Insulated - Adjac		20	9.4	188 Btuh
	Door Total		60		921Btuh
Ceilings	Type	R-Value	Area X	HTM=	Load
1	Under Attic	30.0	1388	1.3	1804 Btuh
	Ceiling Total		1388		1804Btuh
Floors	Type	R-Value	Size X	HTM=	Load
1	Slab-On-Grade Edge Insul	0	172.0 ft(p)	31.6	5435 Btuh
	Floor Total		172		5435 Btuh
Infiltration	Type	ACH X	Building Volume	CFM=	Load
	Natural	0.80	10912(sqft)	146	6254 Btuh
	Mechanical			0	0 Btuh
	Infiltration Total			146	6254 Btuh

Totals for Heating	**Subtotal**	**24300 Btuh**
	Duct Loss(using duct multiplier of 0.05)	**1215 Btuh**
	Total Btuh Loss	**25515 Btuh**

Manual J Winter Calculations

Residential Load - Component Details (continued)

Spec House	Project Title:	Class 3 Rating
	511232HitsonShirley	Registration No. 0
, FL		Climate: North
		12/8/2005

Key: Window types (SHGC - Shading coefficient of glass as SHGC numerical value or as clear or tint)
(Frame types - metal, wood or insulated metal)
(U - Window U-Factor or 'DEF' for default)
(HTM - ManualJ Heat Transfer Multiplier)
Key: Floor size (perimeter(p) for slab-on-grade or area for all other floor types)

System Sizing Calculations - Summer

Residential Load - Component Details

Spec House
, FL

Project Title:
511232HitsonShirley

Class 3 Rating
Registration No. 0
Climate: North

Reference City: Gainesville (Defaults) Summer Temperature Difference: 18.0 F 12/8/2005

Window	Type Panes/SHGC/U/InSh/ExSh	Ornt	Overhang Len	Overhang Hgt	Window Area(sqft) Gross	Shaded	Unshaded	HTM Shaded	HTM Unshaded	Load	
1	2, Clear, DEF, N, N	N	1.5	3.5	6.0	0.0	6.0	22	22	132	Btuh
2	2, Clear, DEF, N, N	N	1.5	5.5	45.0	0.0	45.0	22	22	990	Btuh
3	2, Clear, DEF, N, N	N	1.5	8	20.0	0.0	20.0	22	22	440	Btuh
4	2, Clear, DEF, N, N	N	1.5	3.5	9.0	0.0	9.0	22	22	198	Btuh
5	2, Clear, DEF, N, N	N	1.5	8	40.0	0.0	40.0	22	22	880	Btuh
6	2, Clear, DEF, N, N	S	6	5.5	15.0	15.0	0.0	22	37	330	Btuh
7	2, Clear, DEF, N, N	S	6	8	7.0	7.0	0.0	22	37	154	Btuh
8	2, Clear, DEF, N, N	S	0	0	60.0	0.0	60.0	22	37	2220	Btuh
9	2, Clear, DEF, N, N	S	0	0	6.0	0.0	6.0	22	37	222	Btuh
10	2, Clear, DEF, N, N	W	1.5	5.5	10.0	0.0	10.0	22	72	720	Btuh
	Window Total				218					6286	Btuh

Walls	Type	R-Value	Area	HTM	Load	
1	Frame - Exterior	13.0	1118.0	1.7	1945	Btuh
2	Frame - Adjacent	13.0	156.0	1.0	162	Btuh
	Wall Total		1274.0		2108	Btuh

Doors	Type	Area	HTM	Load	
1	Insulated - Exter	20.0	10.1	203	Btuh
2	Insulated - Exter	20.0	10.1	203	Btuh
3	Insulated - Adjac	20.0	10.1	203	Btuh
	Door Total	60.0		608	Btuh

Ceilings	Type/Color	R-Value	Area	HTM	Load	
1	Under Attic/Dark	30.0	1388.0	1.4	1971	Btuh
	Ceiling Total		1388.0		1971	Btuh

Floors	Type	R-Value	Size	HTM	Load	
1	Slab-On-Grade Edge Insulation	0.0	172.0 ft(p)	0.0	0	Btuh
	Floor Total		172.0		0	Btuh

Infiltration	Type	ACH	Volume	CFM=	Load	
	Natural	0.70	10912	127.6	2526	Btuh
	Mechanical			0	0	Btuh
	Infiltration Total			128	2526	Btuh

Internal gain	Occupants		Btuh/occupant		Appliance	Load	
	6	X	300	+	1200	3000	Btuh

Manual J Summer Calculations

Residential Load - Component Details (continued)

Spec House
, FL

Project Title:
511232HitsonShirley

Class 3 Rating
Registration No. 0
Climate: North

12/8/2005

Totals for Cooling	Subtotal	16499	Btuh
	Duct gain(using duct multiplier of 0.10)	1650	Btuh
	Total sensible gain	18148	Btuh
	Latent infiltration gain (for 51 gr. humidity difference)	4424	Btuh
	Latent occupant gain (6 people @ 230 Btuh per person)	1380	Btuh
	Latent other gain	0	Btuh
	TOTAL GAIN	23952	Btuh

Key: Window types (SHGC - Shading coefficient of glass as SHGC numerical value or as clear or tint)
(U - Window U-Factor or 'DEF' for default)
(InSh - Interior shading device: none(N), Blinds/Daperies(B) or Roller Shades(R))
(ExSh - Exterior shading device: none(N) or numerical value)
(Ornt - compass orientation)

CERTIFICATE OF

OCCUPANCY

COLUMBIA COUNTY, FLORIDA

Department of Building and Zoning Inspection

This Certificate of Occupancy is issued to the below named permit holder for the building and premises at the below named location, and certifies that the work has been completed in accordance with the Columbia County Building Code.

Parcel Number 20-4S-16-03079-069 **Building permit No.** 000024415

Use Classification SFD,UTILITY **Fire:** 17.76

Permit Holder CHARLES PEELER **Waste:** 36.75

Owner of Building CHARLES PEELER **Total:** 54.51

Location: 152 SW GREMLIN WAY

Date: 07/26/2006

Harry Dicks

Building Inspector

POST IN A CONSPICUOUS PLACE
(Business Places Only)

Alpine Engineered Products, Inc.

1950 Marley Drive Haines City, FL 33844
Florida Engineering Certificate of Authorization Number: 567
Florida Certificate of Product Approval # FL1999
 Document ID:1ST2487-Z0319094256

Truss Fabricator: Anderson Truss Company
Job Identification: 5-550-SHIRLEY HITSON - #10 SHADY OAKS
Truss Count: 19
Model Code: Florida Building Code 2004
Truss Criteria: ANSI/TPI-2002(STD)/FBC
Engineering Software: Alpine Software,Version 7.22.
Structural Engineer of Record:
Address:
Minimum Design Loads: Roof - 40.0 PSF @ 1.25 Duration
Floor - N/A
Wind - 110 MPH ASCE 7-02 -Closed

Seal Date: 12/19/2005

-Truss Design Engineer-
Arthur R. Fisher
Florida License Number: 59687
1950 Marley Drive
Haines City, FL 33844

Notes:

1. Determination as to the suitability of these truss components for the structure is the responsibility of the building designer/engineer of record, as defined in ANSI/TPI 1
2. The drawing date shown on this index sheet must match the date shown on the individual truss component drawing.
3. As shown on attached drawings; the drawing number is preceded by: HCUSR487

Details: BRCLBSUB

#	Ref Description	Drawing#	Date
1	34235--A1-GE	05353075	12/19/05
2	34236--A2	05353077	12/19/05
3	34237--A3	05353078	12/19/05
4	34238--A4	05353071	12/19/05
5	34239--A5	05353069	12/19/05
6	34240--A6	05353070	12/19/05
7	34241--B1-GE	05353084	12/19/05
8	34242--B2	05353067	12/19/05
9	34243--B3	05353068	12/19/05
10	34244--B4	05353074	12/19/05
11	34245--B5	05353073	12/19/05
12	34246--B6	05353072	12/19/05
13	34247--C1-GE	05353076	12/19/05
14	34248--C2	05353079	12/19/05
15	34249--C3	05353080	12/19/05
16	34250--C4G	05353081	12/19/05
17	34251--D1-GE	05353082	12/19/05
18	34252--D2G	05353083	12/19/05
19	34253--K1-GE	05353066	12/19/05

Alpine Engineered Products, Inc.

1950 Marley Drive Haines City, FL 33844
Florida Engineering Certificate of Authorization Number: 567
 Document ID:1ST2487-Z0319094256

Truss Fabricator: Anderson Truss Company
Job Identification: 5-550-SHIRLEY HITSON - #10 SHADY OAKS (5-550|-SHIRLEY HITSON - #10 SHADY OAKS)
Truss Count: 3
Model Code: Florida Building Code 2004
Truss Criteria: ANSI/TPI-2002(STD)/FBC
Engineering Software: Alpine Software,Version 7.22.
Structural Engineer of Record:
Address:
Minimum Design Loads: Roof - 40.0 PSF @ 1.25 Duration
Floor - N/A
Wind - 110 MPH ASCE 7-02 -Closed

Seal Date: 12/19/2005

-Truss Design Engineer-
Arthur R. Fisher
Florida License Number: 59687
1950 Marley Drive
Haines City, FL 33844

Notes:

1. Determination as to the suitability of these truss components for the structure is the responsibility of the building designer/engineer of record, as defined in ANSI/TPI 1
2. The drawing date shown on this index sheet must match the date shown on the individual truss component drawing.
3. As shown on attached drawings; the drawing number is preceded by: HCUSR487

Revised Trusses

#	Ref	Description	Drawing#	Date
1	34235--A1-GE		05353075	12/19/05
2	34247--C1-GE		05353076	12/19/05
3	34253--K1-GE		05353066	12/19/05

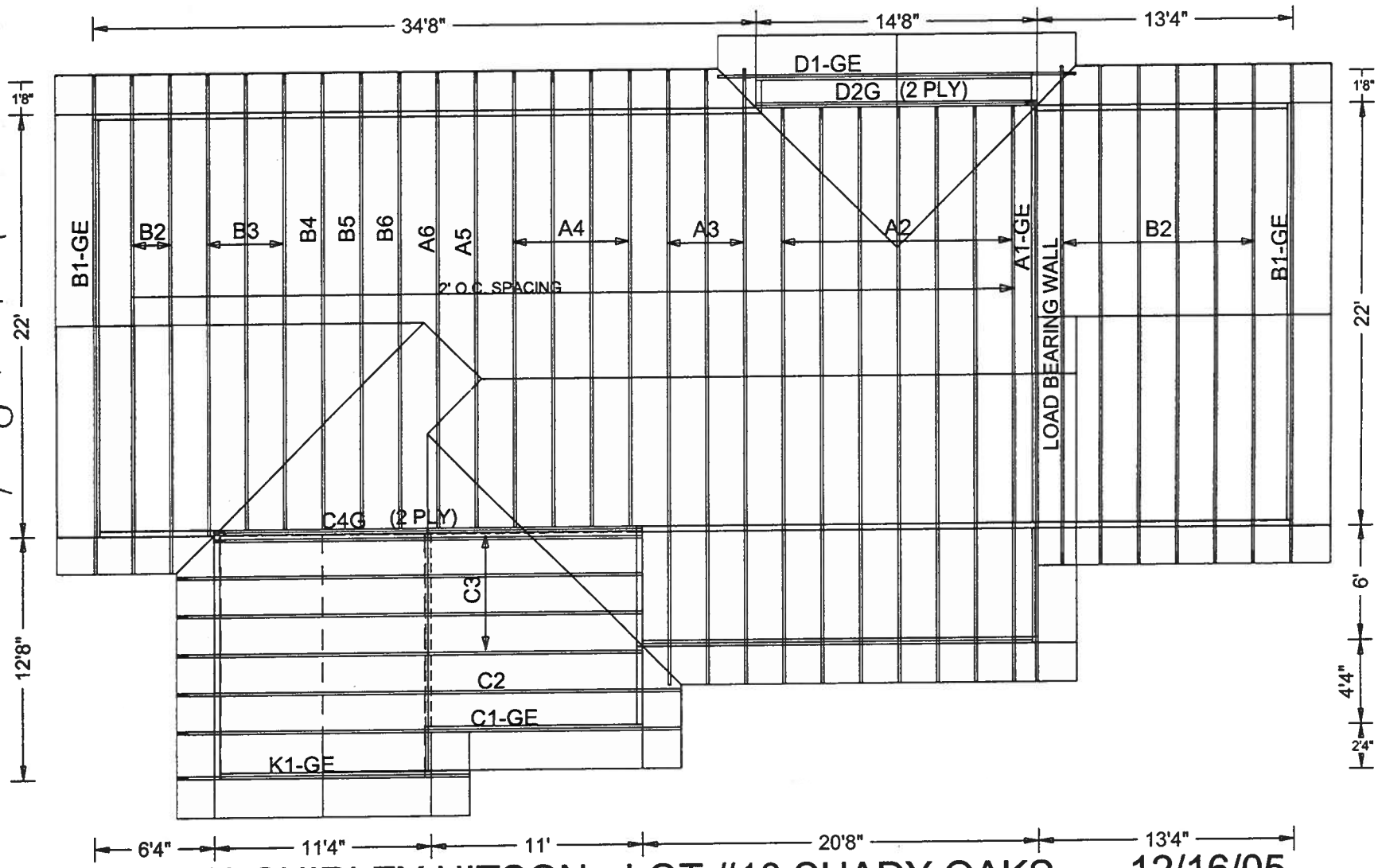

Charles Peeler
754-4663 or 623-4448

#5-549 SHIRLEY HITSON - LOT #10 SHADY OAKS

12/16/05

Scale: 1/8" = 1'

JOB NO: 5-550	PAGE NO: 1 OF 1

(5-550-SHIRLEY HITSON - #10 SHADY OAKS - AI-GE)

Top chord 2x4 SP #2 Dense
Bot chord 2x4 SP #2 Dense
Webs 2x4 SP #3

SPECIAL LOADS
------(LUMBER DUR.FAC.=1.25 / PLATE DUR.FAC.=1.25)

TC - From	62 PLF	at 0.00	to	62 PLF	at 11.00
TC - From	113 PLF	at 11.00	to	113 PLF	at 14.00
TC - From	113 PLF	at 14.00	to	113 PLF	at 22.00
TC - From	83 PLF	at 22.00	to	83 PLF	at 28.00
TC - From	62 PLF	at 28.00	to	62 PLF	at 30.00
BC - From	20 PLF	at 0.00	to	4 PLF	at 30.00

+ LATERALLY BRACE FOR HORIZONTAL WIND LOADS.
BRACING SYSTEM TO BE DESIGNED AND FURNISHED BY OTHERS.

110 mph wind, 15.00 ft mean hgt, ASCE 7-02, CLOSED bldg, not located within 4.50 ft from roof edge, CAT II, EXP B, wind TC DL=5.0 psf, wind BC DL=5.0 psf.

Deflection meets L/360 live and L/240 total load.

THE BUILDING DESIGNER IS RESPONSIBLE FOR THE DESIGN OF THE ROOF AND CEILING DIAPHRAGMS, GABLE END SHEAR WALLS, AND SUPPORTING SHEAR WALLS. SHEAR WALLS MUST PROVIDE CONTINUOUS LATERAL RESTRAINT TO THE GABLE END. ALL CONNECTIONS TO BE DESIGNED BY THE BUILDING DESIGNER.

See DWGS A10015EE0405, GBLLETIN0405, & GBLBRSTD0405 for more requirements.

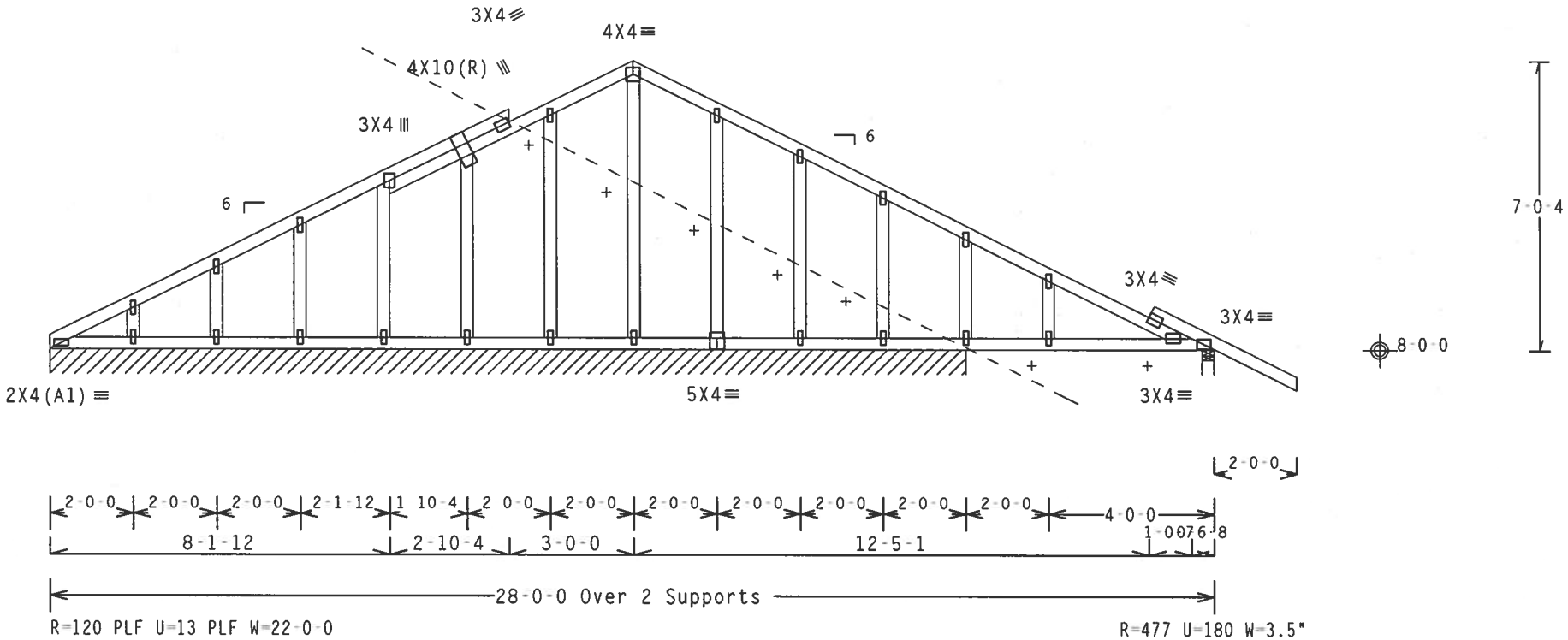

Note: All Plates Are 1.5X4 Except As Shown.

Design Crit: TPI-2002(STD)/FBC

PLT TYP. Wave Cq/RT=1.00(1.25)/10(0) 7.22.1 QTY:1 FL/-/4/-/-/R/- Scale =.25"/Ft.

ALPINE
Alpine Engineered Products, Inc.
1950 Marley Drive
Haines City, FL 33844
FL Certificate of Authorization # 567

WARNING TRUSSES REQUIRE EXTREME CARE IN FABRICATION, HANDLING, SHIPPING, INSTALLING AND BRACING. REFER TO BCSI 1-03 (BUILDING COMPONENT SAFETY INFORMATION), PUBLISHED BY TPI (TRUSS PLATE INSTITUTE, 583 D'ONOFRIO DR., SUITE 200, MADISON, WI 53719) AND WTCA (WOOD TRUSS COUNCIL OF AMERICA, 6300 ENTERPRISE LN, MADISON, WI 53719) FOR SAFETY PRACTICES PRIOR TO PERFORMING THESE FUNCTIONS. UNLESS OTHERWISE INDICATED, TOP CHORD SHALL HAVE PROPERLY ATTACHED STRUCTURAL PANELS AND BOTTOM CHORD SHALL HAVE A PROPERLY ATTACHED RIGID CEILING.

IMPORTANTFURNISH A COPY OF THIS DESIGN TO THE INSTALLATION CONTRACTOR. ALPINE ENGINEERED PRODUCTS, INC. SHALL NOT BE RESPONSIBLE FOR ANY DEVIATION FROM THIS DESIGN; ANY FAILURE TO BUILD THE TRUSS IN CONFORMANCE WITH TPI; OR FABRICATING, HANDLING, SHIPPING, INSTALLING & BRACING OF TRUSSES. DESIGN CONFORMS WITH APPLICABLE PROVISIONS OF NDS (NATIONAL DESIGN SPEC. BY AF&PA) AND TPI. ALPINE CONNECTOR PLATES ARE MADE OF 20/18/16GA (W,H/S/K) ASTM A653 GRADE 40/60 (W, K/H,S) GALV. STEEL. APPLY PLATES TO EACH FACE OF TRUSS AND. UNLESS OTHERWISE LOCATED ON THIS DESIGN, POSITION PER DRAWINGS 160A-Z. ANY INSPECTION OF PLATES FOLLOWED BY (1) SHALL BE PER ANNEX A3 OF TPI1-2002 SEC.3. A SEAL ON THIS DRAWING INDICATES ACCEPTANCE OF PROFESSIONAL ENGINEERING RESPONSIBILITY SOLELY FOR THE TRUSS COMPONENT DESIGN SHOWN. THE SUITABILITY AND USE OF THIS COMPONENT FOR ANY BUILDING IS THE RESPONSIBILITY OF THE BUILDING DESIGNER PER ANSI/TPI 1 SEC. 2.

ARTHUR R. FISHER LICENSE No.59687 STATE OF FLORIDA PROFESSIONAL ENGINEER

Dec 19 '05

TC LL	20.0 PSF	REF	R487-- 34235
TC DL	10.0 PSF	DATE	12/19/05
BC DL	10.0 PSF	DRW	HCUSR487 05353075
BC LL	0.0 PSF	HC-ENG	DF/AF
TOT.LD.	40.0 PSF	SEQN-	67221 REV
DUR.FAC.	1.25		
SPACING	SEE ABOVE	JREF-	1ST2487_Z03

(5-550 SHIRLEY HITSON - #10 SHADY OAKS - A2)

Top chord 2x4 SP #2 Dense
Bot chord 2x4 SP #2 Dense
Webs 2x4 SP #3

(A) Continuous lateral bracing equally spaced on member.

110 mph wind, 15.00 ft mean hgt, ASCE 7-02, CLOSED bldg, not located within 4.50 ft from roof edge, CAT II, EXP B, wind TC DL=5.0 psf, wind BC DL=5.0 psf.

Deflection meets L/360 live and L/240 total load.

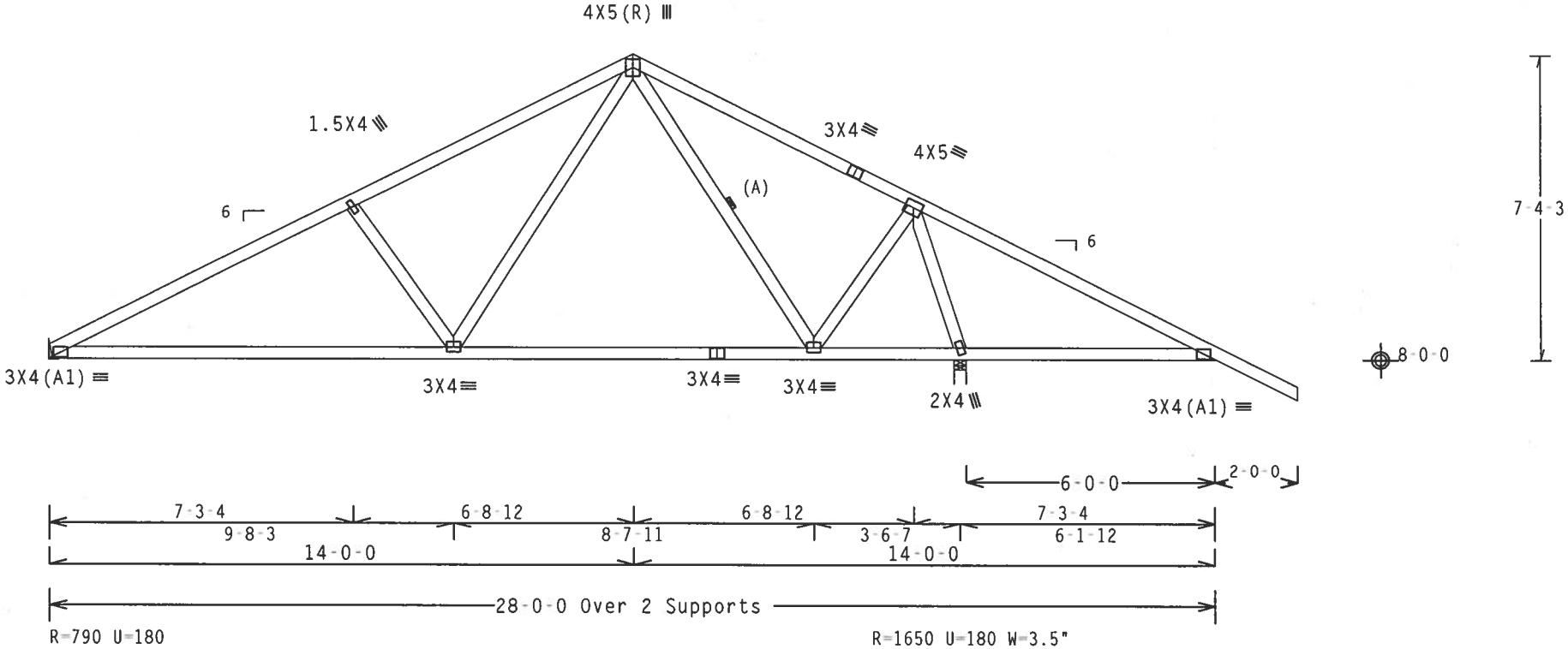

Design Crit: TPI-2002(STD)/FBC

PLT TYP. Wave

Cq/RT=1.00(1.25)/10(0) 7.22.1 QTY:7 FL/-/4/-/-/R/- Scale =.25"/Ft.

ALPINE

Alpine Engineered Products, Inc.
1950 Marley Drive
Haines City, FL 33844
FL Certificate of Authorization # 567

WARNING TRUSSES REQUIRE EXTREME CARE IN FABRICATION, HANDLING, SHIPPING, INSTALLING AND BRACING. REFER TO BCSI 1-03 (BUILDING COMPONENT SAFETY INFORMATION), PUBLISHED BY TPI (TRUSS PLATE INSTITUTE, 583 D'ONOFRIO DR., SUITE 200, MADISON, WI 53719) AND WTCA (WOOD TRUSS COUNCIL OF AMERICA, 6300 ENTERPRISE LN, MADISON, WI 53719) FOR SAFETY PRACTICES PRIOR TO PERFORMING THESE FUNCTIONS. UNLESS OTHERWISE INDICATED, TOP CHORD SHALL HAVE PROPERLY ATTACHED STRUCTURAL PANELS AND BOTTOM CHORD SHALL HAVE A PROPERLY ATTACHED RIGID CEILING.

IMPORTANTFURNISH A COPY OF THIS DESIGN TO THE INSTALLATION CONTRACTOR. ALPINE ENGINEERED PRODUCTS, INC. SHALL NOT BE RESPONSIBLE FOR ANY DEVIATION FROM THIS DESIGN; ANY FAILURE TO BUILD THE TRUSS IN CONFORMANCE WITH TPI; OR FABRICATING, HANDLING, SHIPPING, INSTALLING & BRACING OF TRUSSES. DESIGN CONFORMS WITH APPLICABLE PROVISIONS OF NDS (NATIONAL DESIGN SPEC. BY AF&PA) AND TPI. ALPINE CONNECTOR PLATES ARE MADE OF 20/18/16GA (W,H/S/K) ASTM A653 GRADE 40/60 (W, K/H,S) GALV. STEEL. APPLY PLATES TO EACH FACE OF TRUSS AND, UNLESS OTHERWISE LOCATED ON THIS DESIGN, POSITION PER DRAWINGS 160A-Z. ANY INSPECTION OF PLATES FOLLOWED BY (I) SHALL BE PER ANNEX A3 OF TPI1-2002 SEC.3. A SEAL ON THIS DRAWING INDICATES ACCEPTANCE OF PROFESSIONAL ENGINEERING RESPONSIBILITY SOLELY FOR THE TRUSS COMPONENT DESIGN SHOWN. THE SUITABILITY AND USE OF THIS COMPONENT FOR ANY BUILDING IS THE RESPONSIBILITY OF THE BUILDING DESIGNER PER ANSI/TPI 1 SEC. 2.

ARTHUR R. FISHER LICENSE No 59687 STATE OF FLORIDA PROFESSIONAL ENGINEER

Dec 19 '05

TC LL	20.0 PSF	REF	R487-- 34236
TC DL	10.0 PSF	DATE	12/19/05
BC DL	10.0 PSF	DRW	HCUSR487 05353077
BC LL	0.0 PSF	HC-ENG	DF/AF
TOT.LD.	40.0 PSF	SEQN-	67170
DUR.FAC.	1.25		
SPACING	24.0"	JREF-	1ST2487_Z03

(5-550-SHIRLEY HIXSON - #10 - SHADY OAKS - A3)

Top chord 2x4 SP #2 Dense
Bot chord 2x4 SP #2 Dense
Webs 2x4 SP #3

(A) Continuous lateral bracing equally spaced on member.

NOTE: THIS TRUSS MUST BE INSTALLED AS SHOWN. IT CAN NOT BE FLIPPED END FOR END.

110 mph wind, 15.00 ft mean hgt, ASCE 7-02, CLOSED bldg, not located within 4.50 ft from roof edge, CAT II, EXP B, wind TC DL=5.0 psf, wind BC DL=5.0 psf.

Deflection meets L/360 live and L/240 total load.

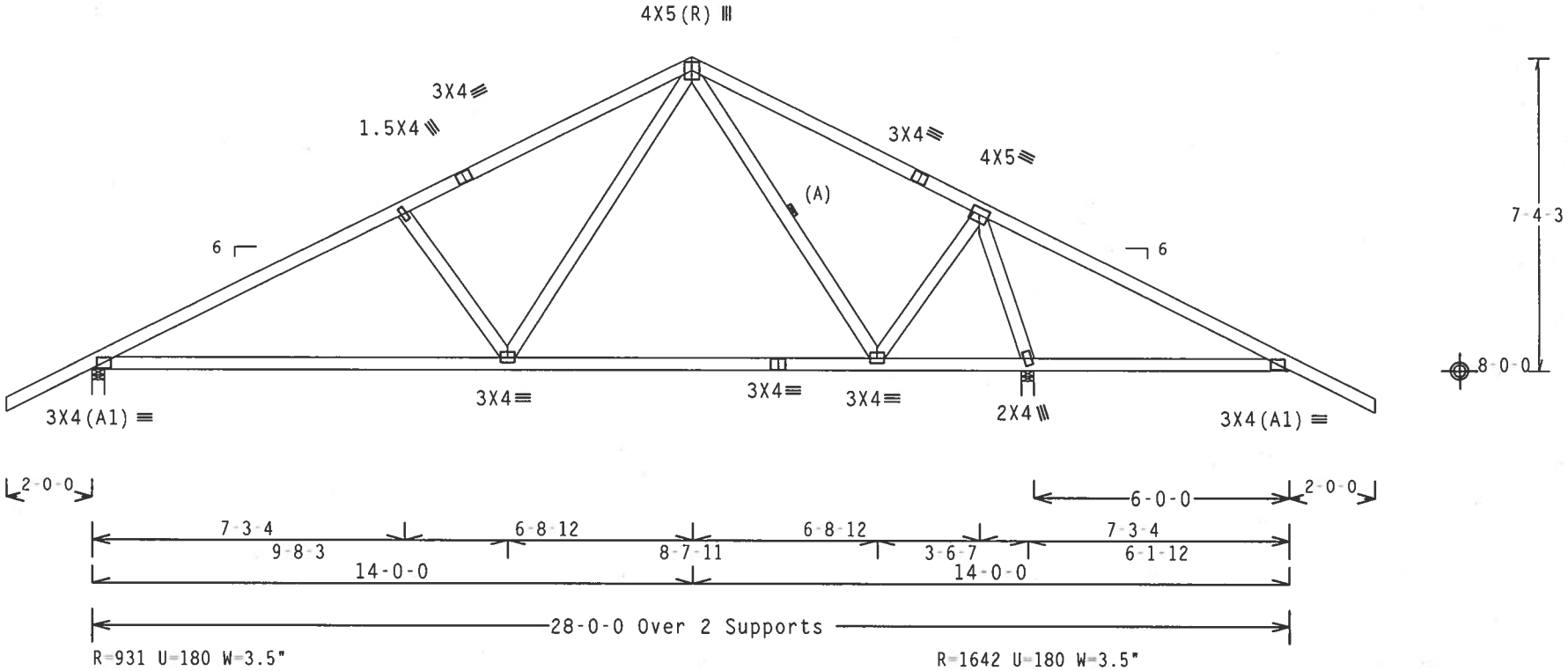

Design Crit: TPI-2002(STD)/FBC
Cq/RT=1.00(1.25)/10(0) 7.22.1 QTY:3 FL/-/4/-/-/R/-

PLT TYP. Wave

Scale =.25"/Ft.

ALPINE
Alpine Engineered Products, Inc.
1950 Marley Drive
Haines City, FL 33844
FL Certificate of Authorization # 567

WARNING TRUSSES REQUIRE EXTREME CARE IN FABRICATION, HANDLING, SHIPPING, INSTALLING AND BRACING. REFER TO BCSI 1-03 (BUILDING COMPONENT SAFETY INFORMATION), PUBLISHED BY TPI (TRUSS PLATE INSTITUTE, 583 D'ONOFRIO DR., SUITE 200, MADISON, WI 53719) AND WTCA (WOOD TRUSS COUNCIL OF AMERICA, 6300 ENTERPRISE LN, MADISON, WI 53719) FOR SAFETY PRACTICES PRIOR TO PERFORMING THESE FUNCTIONS. UNLESS OTHERWISE INDICATED, TOP CHORD SHALL HAVE PROPERLY ATTACHED STRUCTURAL PANELS AND BOTTOM CHORD SHALL HAVE A PROPERLY ATTACHED RIGID CEILING.

IMPORTANT FURNISH A COPY OF THIS DESIGN TO THE INSTALLATION CONTRACTOR. ALPINE ENGINEERED PRODUCTS, INC. SHALL NOT BE RESPONSIBLE FOR ANY DEVIATION FROM THIS DESIGN; ANY FAILURE TO BUILD THE TRUSS IN CONFORMANCE WITH TPI; OR FABRICATING, HANDLING, SHIPPING, INSTALLING & BRACING OF TRUSSES. DESIGN CONFORMS WITH APPLICABLE PROVISIONS OF NDS (NATIONAL DESIGN SPEC, BY AF&PA) AND TPI. ALPINE CONNECTOR PLATES ARE MADE OF 20/18/16GA (W,H/S/K) ASTM A653 GRADE 40/60 (W, K/H,S) GALV. STEEL. APPLY PLATES TO EACH FACE OF TRUSS AND, UNLESS OTHERWISE LOCATED ON THIS DESIGN, POSITION PER DRAWINGS 160A-Z. ANY INSPECTION OF PLATES FOLLOWED BY (1) SHALL BE PER ANNEX A3 OF TPI1-2002 SEC.3. A SEAL ON THIS DRAWING INDICATES ACCEPTANCE OF PROFESSIONAL ENGINEERING RESPONSIBILITY SOLELY FOR THE TRUSS COMPONENT DESIGN SHOWN. THE SUITABILITY AND USE OF THIS COMPONENT FOR ANY BUILDING IS THE RESPONSIBILITY OF THE BUILDING DESIGNER PER ANSI/TPI 1 SEC. 2.

ARTHUR R. FISHER
LICENSE
No.59687
STATE OF FLORIDA
PROFESSIONAL ENGINEER
Dec 19 '05

TC LL	20.0 PSF	REF	R487-- 34237
TC DL	10.0 PSF	DATE	12/19/05
BC DL	10.0 PSF	DRW	HCUSR487 05353078
BC LL	0.0 PSF	HC-ENG	DF/AF *
TOT.LD.	40.0 PSF	SEQN-	19222
DUR.FAC.	1.25		
SPACING	24.0"	JREF-	1ST2487_Z03

(5-550 SHIRLEY HITSON - #10 SHADY OAKS - A4)

Top chord 2x4 SP #2 Dense
Bot chord 2x4 SP #2 Dense
Webs 2x4 SP #3

Deflection meets L/360 live and L/240 total load.

110 mph wind, 15.00 ft mean hgt, ASCE 7-02, CLOSED bldg, not located within 4.50 ft from roof edge, CAT II, EXP B, wind TC DL=5.0 psf, wind BC DL=5.0 psf.

Right end vertical not exposed to wind pressure.

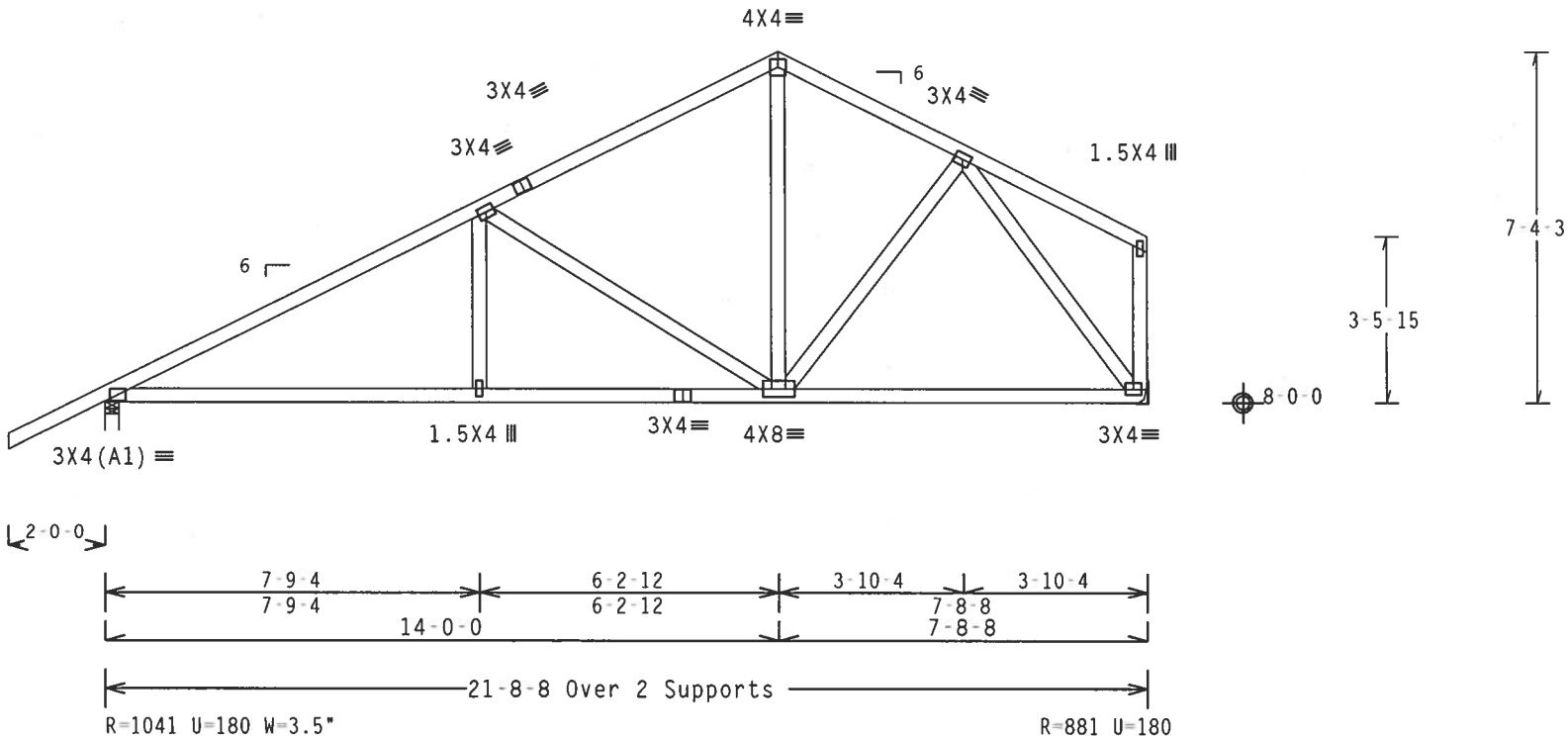

Design Crit: TPI-2002(STD)/FBC
Cq/RT=1.00(1.25)/10(0) 7.22.1 QTY:4 FL/-/4/-/-/R/- Scale =.25"/Ft.

PLT TYP. Wave

ALPINE
Alpine Engineered Products, Inc.
1950 Marley Drive
Haines City, FL 33844
FL Certificate of Authorization # 567

WARNING TRUSSES REQUIRE EXTREME CARE IN FABRICATION, HANDLING, SHIPPING, INSTALLING AND BRACING. REFER TO BCSI 1-03 (BUILDING COMPONENT SAFETY INFORMATION), PUBLISHED BY TPI (TRUSS PLATE INSTITUTE, 583 D'ONOFRIO DR., SUITE 200, MADISON, WI 53719) AND WTCA (WOOD TRUSS COUNCIL OF AMERICA, 6300 ENTERPRISE LN. MADISON, WI 53719) FOR SAFETY PRACTICES PRIOR TO PERFORMING THESE FUNCTIONS. UNLESS OTHERWISE INDICATED, TOP CHORD SHALL HAVE PROPERLY ATTACHED STRUCTURAL PANELS AND BOTTOM CHORD SHALL HAVE A PROPERLY ATTACHED RIGID CEILING.

IMPORTANT FURNISH A COPY OF THIS DESIGN TO THE INSTALLATION CONTRACTOR. ALPINE ENGINEERED PRODUCTS, INC. SHALL NOT BE RESPONSIBLE FOR ANY DEVIATION FROM THIS DESIGN; ANY FAILURE TO BUILD THE TRUSS IN CONFORMANCE WITH TPI; OR FABRICATING, HANDLING, SHIPPING, INSTALLING & BRACING OF TRUSSES. DESIGN CONFORMS WITH APPLICABLE PROVISIONS OF NDS (NATIONAL DESIGN SPEC. BY AF&PA) AND TPI. ALPINE CONNECTOR PLATES ARE MADE OF 20/18/16GA (W.H/S/K) ASTM A653 GRADE 40/60 (W. K/H.S) GALV. STEEL. APPLY PLATES TO EACH FACE OF TRUSS AND, UNLESS OTHERWISE LOCATED ON THIS DESIGN, POSITION PER DRAWINGS 160A-Z. ANY INSPECTION OF PLATES FOLLOWED BY (I) SHALL BE PER ANNEX A3 OF TPI1-2002 SEC.3. A SEAL ON THIS DRAWING INDICATES ACCEPTANCE OF PROFESSIONAL ENGINEERING RESPONSIBILITY SOLELY FOR THE TRUSS COMPONENT DESIGN SHOWN. THE SUITABILITY AND USE OF THIS COMPONENT FOR ANY BUILDING IS THE RESPONSIBILITY OF THE BUILDING DESIGNER PER ANSI/TPI 1 SEC. 2.

ARTHUR B. FISHER
LICENSE
No. 59687
STATE OF FLORIDA
PROFESSIONAL ENGINEER

Dec 19 '05

TC LL	20.0 PSF	REF	R487-- 34238
TC DL	10.0 PSF	DATE	12/19/05
BC DL	10.0 PSF	DRW	HCUSR487 05353071
BC LL	0.0 PSF	HC-ENG	DF/AF
TOT.LD.	40.0 PSF	SEQN-	19199
DUR.FAC.	1.25		
SPACING	24.0"	JREF-	1ST2487_Z03

(5 550 SHIRLEY HIXSON - #10 SHADY OAKS - A5)

Top chord 2x4 SP #2 Dense
Bot chord 2x4 SP #2 Dense
Webs 2x4 SP #3

Deflection meets L/360 live and L/240 total load.

110 mph wind, 15.00 ft mean hgt, ASCE 7-02, CLOSED bldg, not located within 4.50 ft from roof edge, CAT II, EXP B, wind TC DL=5.0 psf, wind BC DL=5.0 psf.

Right end vertical not exposed to wind pressure.

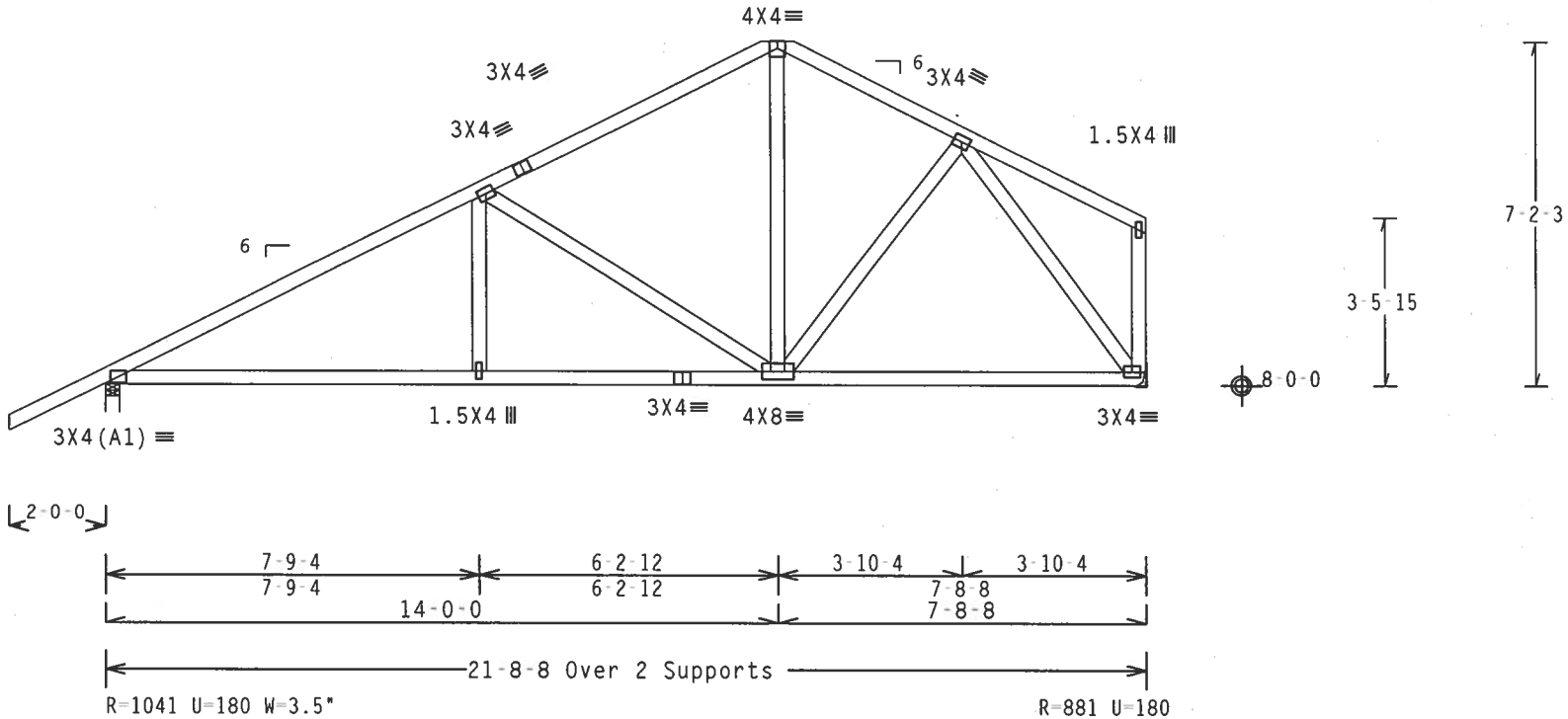

Design Crit: TPI-2002(STD)/FBC
Cq/RT=1.00(1.25)/10(0) 7.22.11 QTY:1 FL/-/4/-/-/R/-

PLT TYP. Wave

Scale =.25"/Ft.

ALPINE
Alpine Engineered Products, Inc.
1950 Marley Drive
Haines City, FL 33844
FL Certificate of Authorization # 567

WARNING TRUSSES REQUIRE EXTREME CARE IN FABRICATION, HANDLING, SHIPPING, INSTALLING AND BRACING. REFER TO BCSI 1-03 (BUILDING COMPONENT SAFETY INFORMATION), PUBLISHED BY TPI (TRUSS PLATE INSTITUTE, 583 D'ONOFRIO DR., SUITE 200, MADISON, WI 53719) AND WTCA (WOOD TRUSS COUNCIL OF AMERICA, 6300 ENTERPRISE LN. MADISON, WI 53719) FOR SAFETY PRACTICES PRIOR TO PERFORMING THESE FUNCTIONS. UNLESS OTHERWISE INDICATED, TOP CHORD SHALL HAVE PROPERLY ATTACHED STRUCTURAL PANELS AND BOTTOM CHORD SHALL HAVE A PROPERLY ATTACHED RIGID CEILING.

IMPORTANT FURNISH A COPY OF THIS DESIGN TO THE INSTALLATION CONTRACTOR. ALPINE ENGINEERED PRODUCTS, INC. SHALL NOT BE RESPONSIBLE FOR ANY DEVIATION FROM THIS DESIGN; ANY FAILURE TO BUILD THE TRUSS IN CONFORMANCE WITH TPI; OR FABRICATING, HANDLING, SHIPPING, INSTALLING & BRACING OF TRUSSES. DESIGN CONFORMS WITH APPLICABLE PROVISIONS OF NDS (NATIONAL DESIGN SPEC. BY AF&PA) AND TPI. ALPINE CONNECTOR PLATES ARE MADE OF 20/18/16GA (W,H/S/K) ASTM A653 GRADE 40/60 (W, K/H,S) GALV. STEEL. APPLY PLATES TO EACH FACE OF TRUSS AND, UNLESS OTHERWISE LOCATED ON THIS DESIGN, POSITION PER DRAWINGS 160A-Z. ANY INSPECTION OF PLATES FOLLOWED BY (I) SHALL BE PER ANNEX A3 OF TPI1-2002 SEC.3. A SEAL ON THIS DRAWING INDICATES ACCEPTANCE OF PROFESSIONAL ENGINEERING RESPONSIBILITY SOLELY FOR THE TRUSS COMPONENT DESIGN SHOWN. THE SUITABILITY AND USE OF THIS COMPONENT FOR ANY BUILDING IS THE RESPONSIBILITY OF THE BUILDING DESIGNER PER ANSI/TPI 1 SEC. 2.

ARTHUR R. FISHER
LICENSE
No. 59687
STATE OF FLORIDA
PROFESSIONAL ENGINEER

Dec 19 '05

TC LL	20.0 PSF	REF	R487-- 34239
TC DL	10.0 PSF	DATE	12/19/05
BC DL	10.0 PSF	DRW	HCUSR487 05353069
BC LL	0.0 PSF	HC-ENG	DF/AF
TOT.LD.	40.0 PSF	SEQN-	19205
DUR.FAC.	1.25		
SPACING	24.0"	JREF-	1ST2487_Z03

(5-550-SHIRLEY HITSON - #10 - SHADY OAKS - A6)

Top chord 2x4 SP #2 Dense
Bot chord 2x4 SP #2 Dense
Webs 2x4 SP #3

Deflection meets L/360 live and L/240 total load.

110 mph wind, 15.00 ft mean hgt, ASCE 7-02, CLOSED bldg, not located within 4.50 ft from roof edge, CAT II, EXP B, wind TC DL=5.0 psf, wind BC DL=5.0 psf.

Right end vertical not exposed to wind pressure.

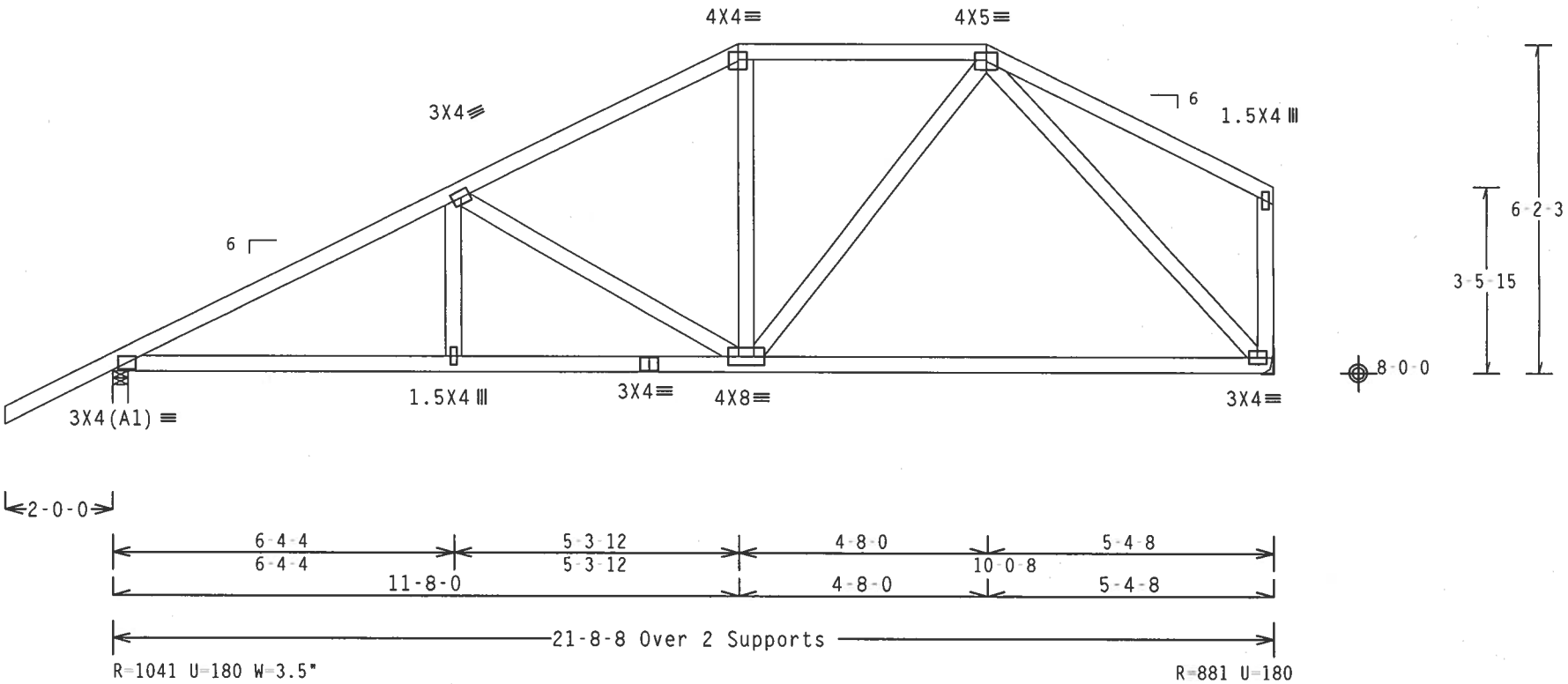

Design Crit: TPI-2002(STD)/FBC
Cq/RT=1.00(1.25)/10(0) 7.22.11 QTY:1 FL/-/4/-/-/R/- Scale =.3125"/Ft.

PLT TYP. Wave

ALPINE
Alpine Engineered Products, Inc.
1950 Marley Drive
Haines City, FL 33844
FL Certificate of Authorization # 567

WARNING TRUSSES REQUIRE EXTREME CARE IN FABRICATION, HANDLING, SHIPPING, INSTALLING AND BRACING. REFER TO BCSI 1-03 (BUILDING COMPONENT SAFETY INFORMATION), PUBLISHED BY TPI (TRUSS PLATE INSTITUTE, 583 D'ONOFRIO DR., SUITE 200, MADISON, WI 53719) AND WTCA (WOOD TRUSS COUNCIL OF AMERICA, 6300 ENTERPRISE LN, MADISON, WI 53719) FOR SAFETY PRACTICES PRIOR TO PERFORMING THESE FUNCTIONS. UNLESS OTHERWISE INDICATED, TOP CHORD SHALL HAVE PROPERLY ATTACHED STRUCTURAL PANELS AND BOTTOM CHORD SHALL HAVE A PROPERLY ATTACHED RIGID CEILING.

IMPORTANTFURNISH A COPY OF THIS DESIGN TO THE INSTALLATION CONTRACTOR. ALPINE ENGINEERED PRODUCTS, INC. SHALL NOT BE RESPONSIBLE FOR ANY DEVIATION FROM THIS DESIGN; ANY FAILURE TO BUILD THE TRUSS IN CONFORMANCE WITH TPI; OR FABRICATING, HANDLING, SHIPPING, INSTALLING & BRACING OF TRUSSES. DESIGN CONFORMS WITH APPLICABLE PROVISIONS OF NDS (NATIONAL DESIGN SPEC. BY AF&PA) AND TPI. ALPINE CONNECTOR PLATES ARE MADE OF 20/18/16GA (W,H/S/K) ASTM A653 GRADE 40/60 (W, K/H,S) GALV. STEEL. APPLY PLATES TO EACH FACE OF TRUSS AND, UNLESS OTHERWISE LOCATED ON THIS DESIGN, POSITION PER DRAWINGS 160A-Z. ANY INSPECTION OF PLATES FOLLOWED BY (1) SHALL BE PER ANNEX A3 OF TPI1-2002 SEC.3. A SEAL ON THIS DRAWING INDICATES ACCEPTANCE OF PROFESSIONAL ENGINEERING RESPONSIBILITY SOLELY FOR THE TRUSS COMPONENT DESIGN SHOWN. THE SUITABILITY AND USE OF THIS COMPONENT FOR ANY BUILDING IS THE RESPONSIBILITY OF THE BUILDING DESIGNER PER ANSI/TPI 1 SEC. 2.

ARTHUR R. FISHER
LICENSE
No. 59687
STATE OF FLORIDA
PROFESSIONAL ENGINEER
Dec 19 '05

TC LL	20.0 PSF	REF	R487-- 34240
TC DL	10.0 PSF	DATE	12/19/05
BC DL	10.0 PSF	DRW	HCUSR487 05353070
BC LL	0.0 PSF	HC-ENG	DF/AF
TOT.LD.	40.0 PSF	SEQN-	19184
DUR.FAC.	1.25		
SPACING	24.0"	JREF-	1ST2487_Z03

(5-550-SHIRLEY HITSON - #10 SHADY OAKS - BI-GL)

Top chord 2x4 SP #2 Dense
Bot chord 2x4 SP #2 Dense
Webs 2x4 SP #3
:Stack Chord SC1 2x4 SP #2 Dense:
:Stack Chord SC2 2x4 SP #2 Dense:

See DWGS A11015EE0405 & GBLLETIN0405 for more requirements.

In lieu of structural panels use purlins to brace TC @ 24" OC.

Deflection meets L/360 live and L/240 total load.

110 mph wind, 15.00 ft mean hgt, ASCE 7-02, CLOSED bldg, Located anywhere in roof, CAT II, EXP B, wind TC DL=5.0 psf, wind BC DL=5.0 psf.

THE BUILDING DESIGNER IS RESPONSIBLE FOR THE DESIGN OF THE ROOF AND CEILING DIAPHRAGMS, GABLE END SHEAR WALLS, AND SUPPORTING SHEAR WALLS. SHEAR WALLS MUST PROVIDE CONTINUOUS LATERAL RESTRAINT TO THE GABLE END. ALL CONNECTIONS TO BE DESIGNED BY THE BUILDING DESIGNER.

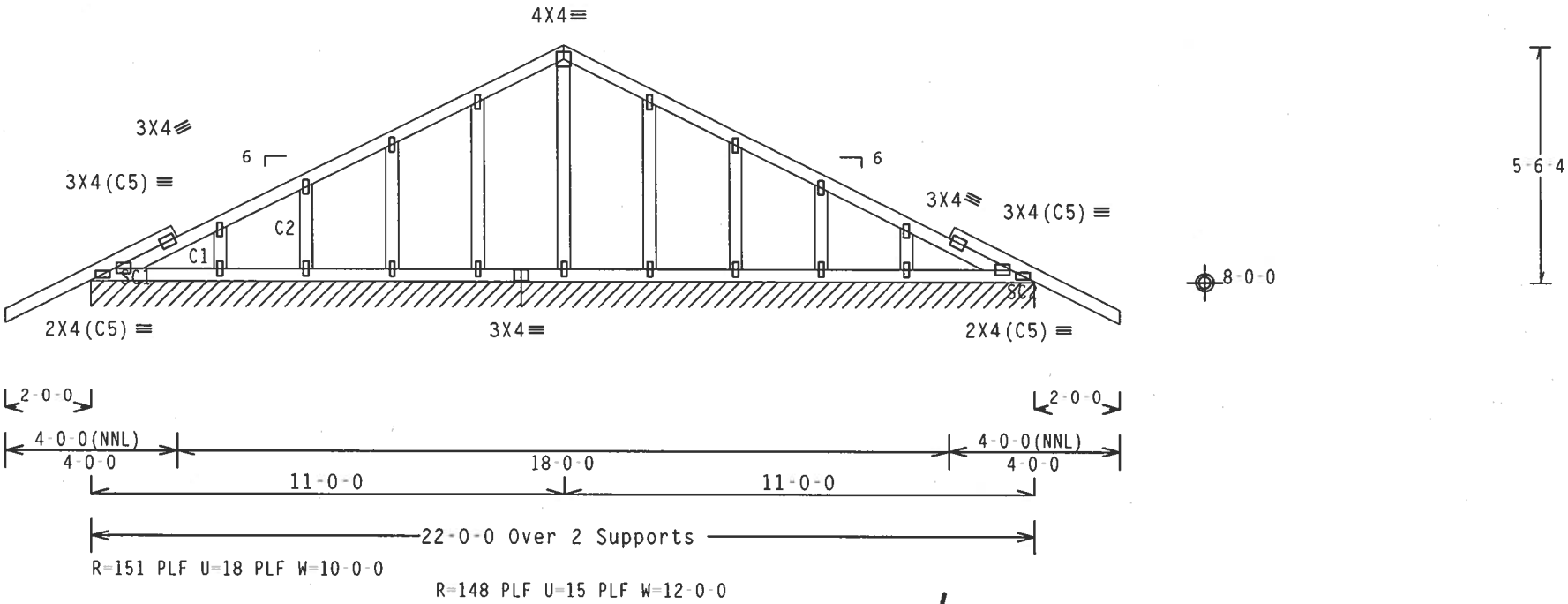

Note: All Plates Are 1.5X4 Except As Shown.

Design Crit: TPI-2002(STD)/FBC

PLT TYP. Wave Cq/RT=1.00(1.25)/10(0) 7.22.11 TY:2 FL/-/4/-/-/R/- Scale =.25"/Ft.

ALPINE

Alpine Engineered Products, Inc.
1950 Marley Drive
Haines City, FL 33844
FL Certificate of Authorization # 567

WARNING TRUSSES REQUIRE EXTREME CARE IN FABRICATION, HANDLING, SHIPPING, INSTALLING AND BRACING. REFER TO BCSI 1-03 (BUILDING COMPONENT SAFETY INFORMATION), PUBLISHED BY TPI (TRUSS PLATE INSTITUTE, 583 D'ONOFRIO DR., SUITE 200, MADISON, WI 53719) AND WTCA (WOOD TRUSS COUNCIL OF AMERICA, 6300 ENTERPRISE LN, MADISON, WI 53719) FOR SAFETY PRACTICES PRIOR TO PERFORMING THESE FUNCTIONS. UNLESS OTHERWISE INDICATED, TOP CHORD SHALL HAVE PROPERLY ATTACHED STRUCTURAL PANELS AND BOTTOM CHORD SHALL HAVE A PROPERLY ATTACHED RIGID CEILING.

IMPORTANTFURNISH A COPY OF THIS DESIGN TO THE INSTALLATION CONTRACTOR. ALPINE ENGINEERED PRODUCTS, INC. SHALL NOT BE RESPONSIBLE FOR ANY DEVIATION FROM THIS DESIGN; ANY FAILURE TO BUILD THE TRUSS IN CONFORMANCE WITH TPI; OR FABRICATING, HANDLING, SHIPPING, INSTALLING & BRACING OF TRUSSES. DESIGN CONFORMS WITH APPLICABLE PROVISIONS OF NDS (NATIONAL DESIGN SPEC. BY AF&PA) AND TPI. ALPINE CONNECTOR PLATES ARE MADE OF 20/18/16GA (W,H/S/K) ASTM A653 GRADE 40/60 (W, K/H,S) GALV. STEEL. APPLY PLATES TO EACH FACE OF TRUSS AND, UNLESS OTHERWISE LOCATED ON THIS DESIGN, POSITION PER DRAWINGS 160A-Z. ANY INSPECTION OF PLATES FOLLOWED BY (1) SHALL BE PER ANNEX A3 OF TPI1-2002 SEC.3. A SEAL ON THIS DRAWING INDICATES ACCEPTANCE OF PROFESSIONAL ENGINEERING RESPONSIBILITY SOLELY FOR THE TRUSS COMPONENT DESIGN SHOWN. THE SUITABILITY AND USE OF THIS COMPONENT FOR ANY BUILDING IS THE RESPONSIBILITY OF THE BUILDING DESIGNER PER ANSI/TPI 1 SEC. 2.

ARTHUR R. FISHER LICENSE No. 59687 STATE OF FLORIDA PROFESSIONAL ENGINEER

Dec 19 '05

TC LL	20.0 PSF	REF	R487-- 34241
TC DL	10.0 PSF	DATE	12/19/05
BC DL	10.0 PSF	DRW	HCUSR487 05353084
BC LL	0.0 PSF	HC-ENG	DF/AF
TOT.LD.	40.0 PSF	SEQN-	19088
DUR.FAC.	1.25		
SPACING	SEE ABOVE	JREF-	1ST2487_Z03

(5-550 SHIRLEY HITSON #10 SHADY OAKS B2)

Top chord 2x4 SP #2 Dense
Bot chord 2x4 SP #2 Dense
Webs 2x4 SP #3

Deflection meets L/360 live and L/240 total load.

110 mph wind, 15.00 ft mean hgt, ASCE 7-02, CLOSED bldg, Located anywhere in roof, CAT II, EXP B, wind TC DL=5.0 psf, wind BC DL=5.0 psf.

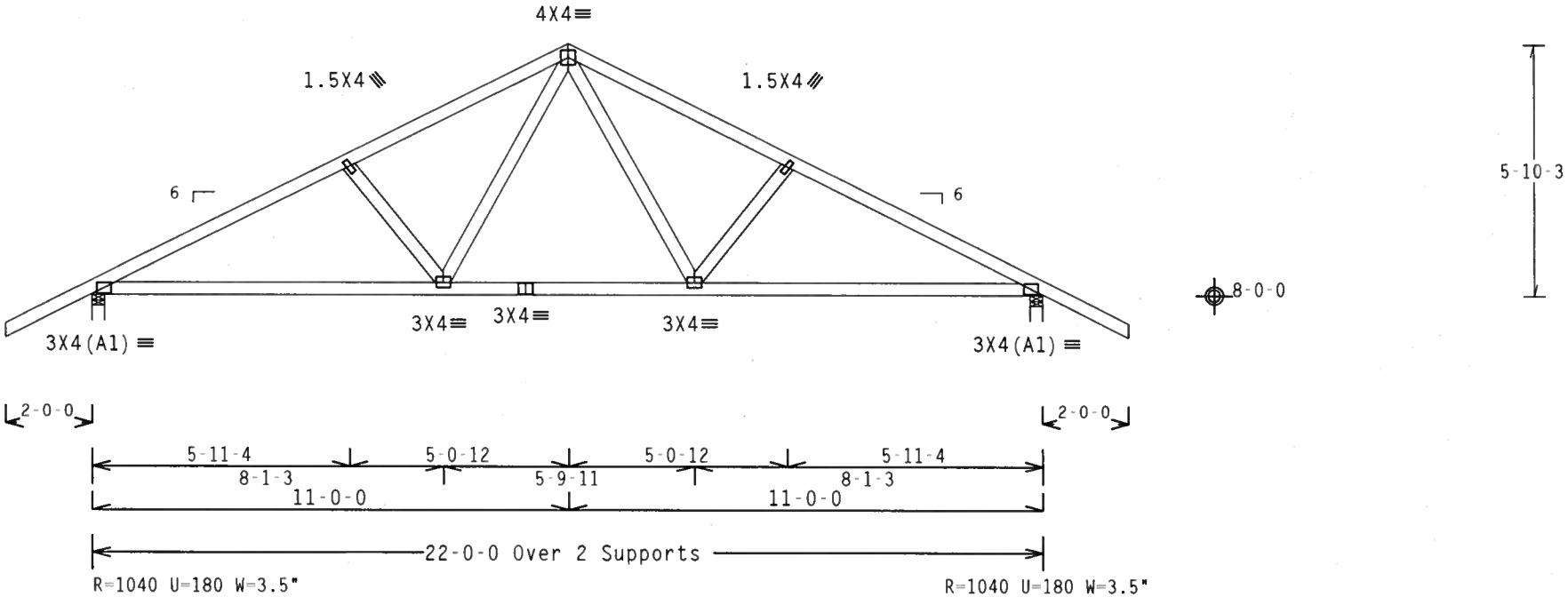

Design Crit: TPI-2002(STD)/FBC
PLT TYP. Wave Cq/RT=1.00(1.25)/10(0) 7.22.1 QTY:8 FL/-/4/-/-/R/- Scale =.25"/Ft.

ALPINE
Alpine Engineered Products, Inc.
1950 Marley Drive
Haines City, FL 33844
FL Certificate of Authorization # 567

WARNING TRUSSES REQUIRE EXTREME CARE IN FABRICATION, HANDLING, SHIPPING, INSTALLING AND BRACING. REFER TO BCSI 1-03 (BUILDING COMPONENT SAFETY INFORMATION), PUBLISHED BY TPI (TRUSS PLATE INSTITUTE, 583 D'ONOFRIO DR., SUITE 200, MADISON, WI 53719) AND WTCA (WOOD TRUSS COUNCIL OF AMERICA, 6300 ENTERPRISE LN. MADISON, WI 53719) FOR SAFETY PRACTICES PRIOR TO PERFORMING THESE FUNCTIONS. UNLESS OTHERWISE INDICATED, TOP CHORD SHALL HAVE PROPERLY ATTACHED STRUCTURAL PANELS AND BOTTOM CHORD SHALL HAVE A PROPERLY ATTACHED RIGID CEILING.

IMPORTANT FURNISH A COPY OF THIS DESIGN TO THE INSTALLATION CONTRACTOR. ALPINE ENGINEERED PRODUCTS, INC. SHALL NOT BE RESPONSIBLE FOR ANY DEVIATION FROM THIS DESIGN; ANY FAILURE TO BUILD THE TRUSS IN CONFORMANCE WITH TPI; OR FABRICATING, HANDLING, SHIPPING, INSTALLING & BRACING OF TRUSSES. DESIGN CONFORMS WITH APPLICABLE PROVISIONS OF NDS (NATIONAL DESIGN SPEC. BY AF&PA) AND TPI. ALPINE CONNECTOR PLATES ARE MADE OF 20/18/16GA (W,H/S/K) ASTM A653 GRADE 40/60 (W, K/H,S) GALV. STEEL. APPLY PLATES TO EACH FACE OF TRUSS AND, UNLESS OTHERWISE LOCATED ON THIS DESIGN, POSITION PER DRAWINGS 160A-Z. ANY INSPECTION OF PLATES FOLLOWED BY (I) SHALL BE PER ANNEX A3 OF TPI1-2002 SEC.3. A SEAL ON THIS DRAWING INDICATES ACCEPTANCE OF PROFESSIONAL ENGINEERING RESPONSIBILITY SOLELY FOR THE TRUSS COMPONENT DESIGN SHOWN. THE SUITABILITY AND USE OF THIS COMPONENT FOR ANY BUILDING IS THE RESPONSIBILITY OF THE BUILDING DESIGNER PER ANSI/TPI 1 SEC. 2.

ARTHUR R. FISHER
LICENSE
No.59687
STATE OF FLORIDA
PROFESSIONAL ENGINEER
Dec 19 '05

TC LL	20.0 PSF	REF	R487-- 34242
TC DL	10.0 PSF	DATE	12/19/05
BC DL	10.0 PSF	DRW	HCUSR487 05353067
BC LL	0.0 PSF	HC-ENG	DF/AF *
TOT.LD.	40.0 PSF	SEQN-	19074
DUR.FAC.	1.25		
SPACING	24.0"	JREF-	1ST2487_Z03

(5-550 SHIRLEY HITSON - #10 SHADY OAKS - B3)

Top chord 2x4 SP #2 Dense
Bot chord 2x4 SP #2 Dense
Webs 2x4 SP #3

Deflection meets L/360 live and L/240 total load.

110 mph wind, 15.00 ft mean hgt, ASCE 7-02, CLOSED bldg, Located anywhere in roof, CAT II, EXP B, wind TC DL=5.0 psf, wind BC DL=5.0 psf.

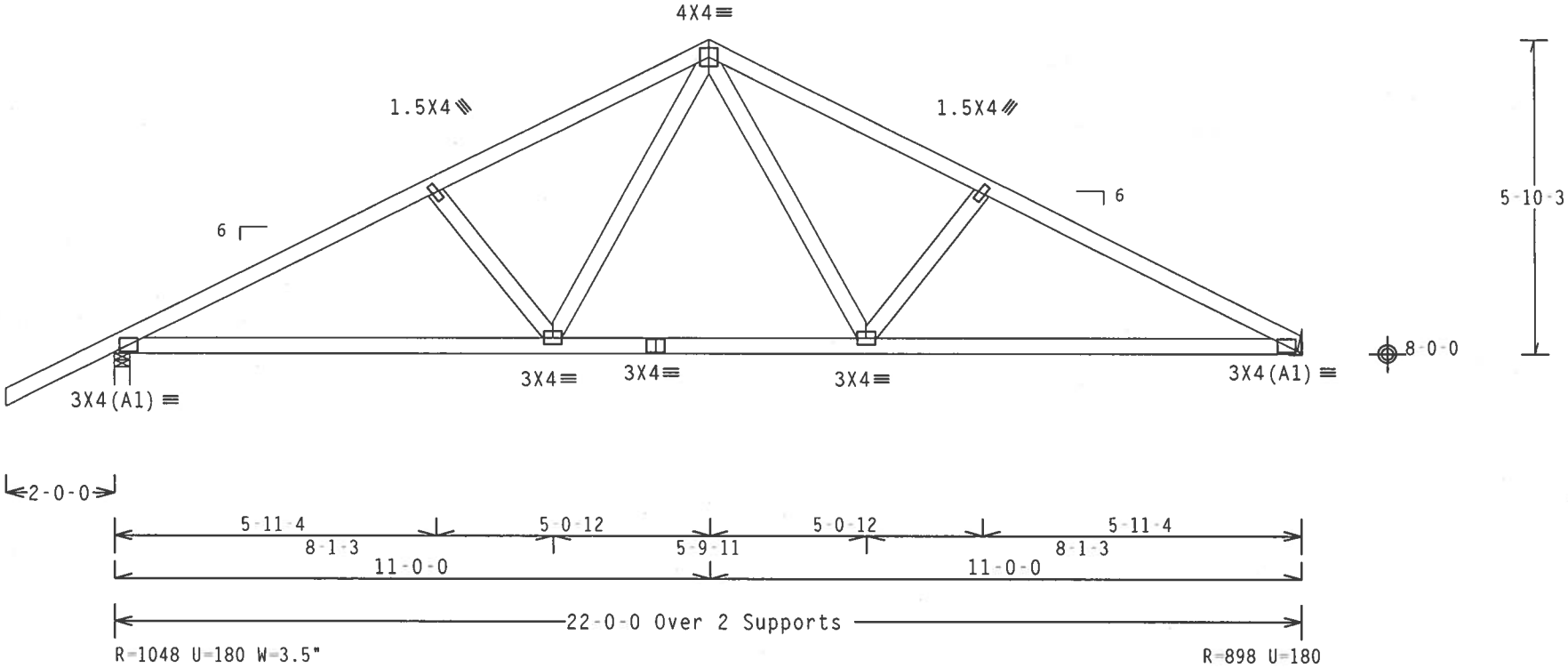

Design Crit: TPI-2002(STD)/FBC
Cq/RT=1.00(1.25)/10(0) 7.22.11 QTY:3 FL/-/4/-/-/R/- Scale =.3125"/Ft.

PLT TYP. Wave

ALPINE
Alpine Engineered Products, Inc.
1950 Marley Drive
Haines City, FL 33844
FL Certificate of Authorization # 567

WARNING TRUSSES REQUIRE EXTREME CARE IN FABRICATION, HANDLING, SHIPPING, INSTALLING AND BRACING. REFER TO BCSI 1-03 (BUILDING COMPONENT SAFETY INFORMATION), PUBLISHED BY TPI (TRUSS PLATE INSTITUTE, 583 D'ONOFRIO DR., SUITE 200, MADISON, WI 53719) AND WTCA (WOOD TRUSS COUNCIL OF AMERICA, 6300 ENTERPRISE LN. MADISON, WI 53719) FOR SAFETY PRACTICES PRIOR TO PERFORMING THESE FUNCTIONS. UNLESS OTHERWISE INDICATED, TOP CHORD SHALL HAVE PROPERLY ATTACHED STRUCTURAL PANELS AND BOTTOM CHORD SHALL HAVE A PROPERLY ATTACHED RIGID CEILING.

IMPORTANTFURNISH A COPY OF THIS DESIGN TO THE INSTALLATION CONTRACTOR. ALPINE ENGINEERED PRODUCTS, INC. SHALL NOT BE RESPONSIBLE FOR ANY DEVIATION FROM THIS DESIGN; ANY FAILURE TO BUILD THE TRUSS IN CONFORMANCE WITH TPI; OR FABRICATING, HANDLING, SHIPPING, INSTALLING & BRACING OF TRUSSES. DESIGN CONFORMS WITH APPLICABLE PROVISIONS OF NDS (NATIONAL DESIGN SPEC. BY AF&PA) AND TPI. ALPINE CONNECTOR PLATES ARE MADE OF 20/18/16GA (W,H/S/K) ASTM A653 GRADE 40/60 (W, K/H,S) GALV. STEEL. APPLY PLATES TO EACH FACE OF TRUSS AND, UNLESS OTHERWISE LOCATED ON THIS DESIGN, POSITION PER DRAWINGS 160A-Z. ANY INSPECTION OF PLATES FOLLOWED BY (1) SHALL BE PER ANNEX A3 OF TPI1-2002 SEC.3. A SEAL ON THIS DRAWING INDICATES ACCEPTANCE OF PROFESSIONAL ENGINEERING RESPONSIBILITY SOLELY FOR THE TRUSS COMPONENT DESIGN SHOWN. THE SUITABILITY AND USE OF THIS COMPONENT FOR ANY BUILDING IS THE RESPONSIBILITY OF THE BUILDING DESIGNER PER ANSI/TPI 1 SEC. 2.

ARTHUR R. FISHER LICENSE No. 59687 STATE OF FLORIDA PROFESSIONAL ENGINEER

Dec 19 '05

TC LL	20.0 PSF	REF	R487-- 34243
TC DL	10.0 PSF	DATE	12/19/05
BC DL	10.0 PSF	DRW	HCUSR487 05353068
BC LL	0.0 PSF	HC-ENG	DF/AF
TOT.LD.	40.0 PSF	SEQN-	67252
DUR.FAC.	1.25		
SPACING	24.0"	JREF-	1ST2487_Z03

(5 550 SHIRLEY HITSON - #10 SHADY OAKS B4)

Top chord 2x4 SP #2 Dense
Bot chord 2x4 SP #2 Dense
Webs 2x4 SP #3

Deflection meets L/360 live and L/240 total load.

110 mph wind, 15.00 ft mean hgt, ASCE 7-02, CLOSED bldg, not located within 4.50 ft from roof edge, CAT II, EXP B, wind TC DL=5.0 psf, wind BC DL=5.0 psf.

Right end vertical not exposed to wind pressure.

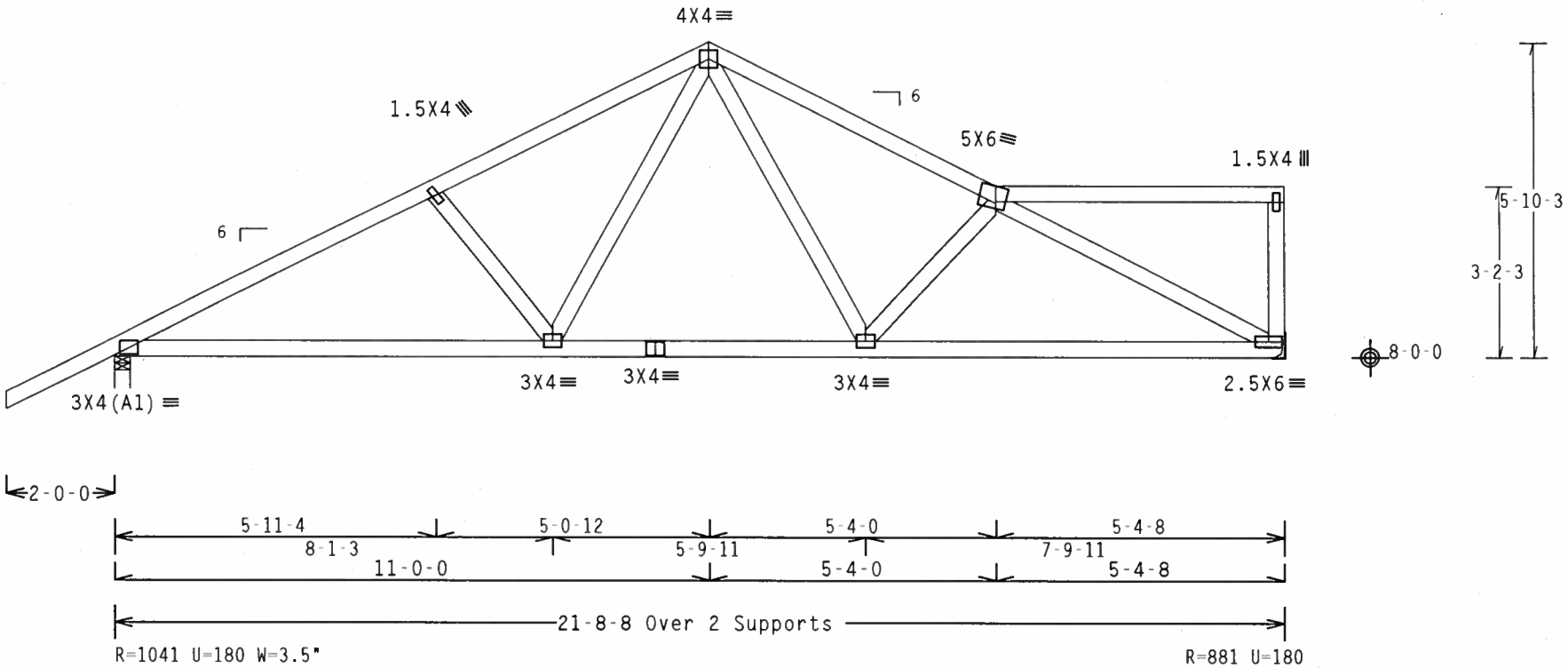

Design Crit: TPI-2002(STD)/FBC
Cq/RT=1.00(1.25)/10(0) 7.22.11 TY:1 FL/-/4/-/-/R/-

PLT TYP. Wave

Scale =.3125"/Ft.

ALPINE
Alpine Engineered Products, Inc.
1950 Marley Drive
Haines City, FL 33844
FL Certificate of Authorization # 567

WARNING TRUSSES REQUIRE EXTREME CARE IN FABRICATION, HANDLING, SHIPPING, INSTALLING AND BRACING. REFER TO BCSI 1-03 (BUILDING COMPONENT SAFETY INFORMATION), PUBLISHED BY TPI (TRUSS PLATE INSTITUTE, 583 D'ONOFRIO DR., SUITE 200, MADISON, WI 53719) AND WTCA (WOOD TRUSS COUNCIL OF AMERICA, 6300 ENTERPRISE LN, MADISON, WI 53719) FOR SAFETY PRACTICES PRIOR TO PERFORMING THESE FUNCTIONS. UNLESS OTHERWISE INDICATED, TOP CHORD SHALL HAVE PROPERLY ATTACHED STRUCTURAL PANELS AND BOTTOM CHORD SHALL HAVE A PROPERLY ATTACHED RIGID CEILING.

IMPORTANT FURNISH A COPY OF THIS DESIGN TO THE INSTALLATION CONTRACTOR. ALPINE ENGINEERED PRODUCTS, INC. SHALL NOT BE RESPONSIBLE FOR ANY DEVIATION FROM THIS DESIGN; ANY FAILURE TO BUILD THE TRUSS IN CONFORMANCE WITH TPI; OR FABRICATING, HANDLING, SHIPPING, INSTALLING & BRACING OF TRUSSES. DESIGN CONFORMS WITH APPLICABLE PROVISIONS OF NDS (NATIONAL DESIGN SPEC. BY AF&PA) AND TPI. ALPINE CONNECTOR PLATES ARE MADE OF 20/18/16GA (W,H/S/K) ASTM A653 GRADE 40/60 (W, K/H,S) GALV. STEEL. APPLY PLATES TO EACH FACE OF TRUSS AND, UNLESS OTHERWISE LOCATED ON THIS DESIGN, POSITION PER DRAWINGS 160A-Z. ANY INSPECTION OF PLATES FOLLOWED BY (1) SHALL BE PER ANNEX A3 OF TPI1-2002 SEC.3. A SEAL ON THIS DRAWING INDICATES ACCEPTANCE OF PROFESSIONAL ENGINEERING RESPONSIBILITY SOLELY FOR THE TRUSS COMPONENT DESIGN SHOWN. THE SUITABILITY AND USE OF THIS COMPONENT FOR ANY BUILDING IS THE RESPONSIBILITY OF THE BUILDING DESIGNER PER ANSI/TPI 1 SEC. 2.

ARTHUR R. FISHER LICENSE No.59687 STATE OF FLORIDA PROFESSIONAL ENGINEER
Dec 19 '05

TC LL	20.0 PSF	REF	R487-- 34244
TC DL	10.0 PSF	DATE	12/19/05
BC DL	10.0 PSF	DRW	HCUSR487 05353074
BC LL	0.0 PSF	HC-ENG	DF/AF
TOT.LD.	40.0 PSF	SEQN-	19136
DUR.FAC.	1.25		
SPACING	24.0"	JREF-	1ST2487_Z03

(5 550 SHIRLEY HITSON - #10 SHADY OAKS - B5)

Top chord 2x4 SP #2 Dense
Bot chord 2x4 SP #2 Dense
Webs 2x4 SP #3

Deflection meets L/360 live and L/240 total load.

110 mph wind, 15.00 ft mean hgt, ASCE 7-02, CLOSED bldg, not located within 4.50 ft from roof edge, CAT II, EXP B, wind TC DL=5.0 psf, wind BC DL=5.0 psf.

Right end vertical not exposed to wind pressure.

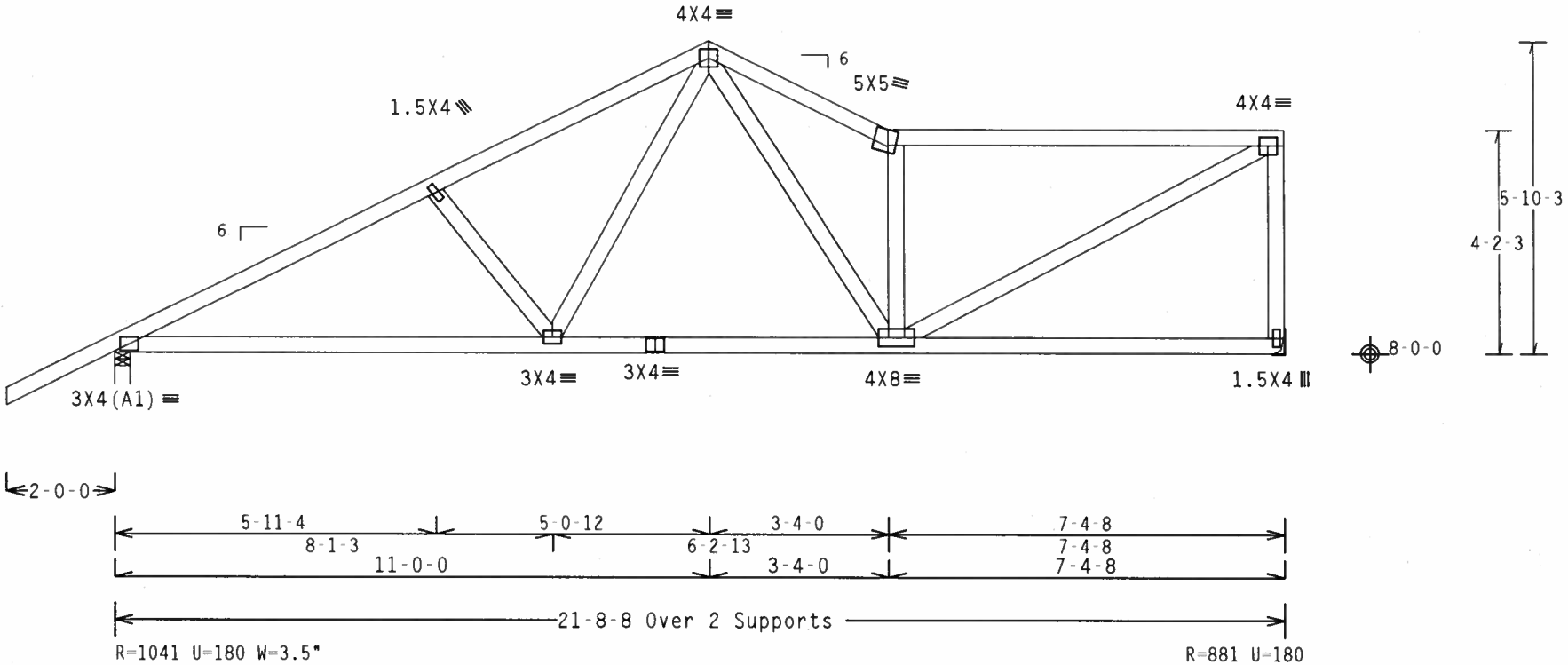

Design Crit: TPI-2002(STD)/FBC
Cq/RT=1.00(1.25)/10(0) 7.22.1 QTY:1 FL/-/4/-/-/R/- Scale =.3125"/Ft.

PLT TYP. Wave

ALPINE
Alpine Engineered Products, Inc.
1950 Marley Drive
Haines City, FL 33844
FL Certificate of Authorization # 567

WARNING TRUSSES REQUIRE EXTREME CARE IN FABRICATION, HANDLING, SHIPPING, INSTALLING AND BRACING. REFER TO BCSI 1-03 (BUILDING COMPONENT SAFETY INFORMATION), PUBLISHED BY TPI (TRUSS PLATE INSTITUTE, 583 D'ONOFRIO DR., SUITE 200, MADISON, WI 53719) AND WTCA (WOOD TRUSS COUNCIL OF AMERICA, 6300 ENTERPRISE LN, MADISON, WI 53719) FOR SAFETY PRACTICES PRIOR TO PERFORMING THESE FUNCTIONS. UNLESS OTHERWISE INDICATED, TOP CHORD SHALL HAVE PROPERLY ATTACHED STRUCTURAL PANELS AND BOTTOM CHORD SHALL HAVE A PROPERLY ATTACHED RIGID CEILING.

IMPORTANT FURNISH A COPY OF THIS DESIGN TO THE INSTALLATION CONTRACTOR. ALPINE ENGINEERED PRODUCTS, INC. SHALL NOT BE RESPONSIBLE FOR ANY DEVIATION FROM THIS DESIGN; ANY FAILURE TO BUILD THE TRUSS IN CONFORMANCE WITH TPI: OR FABRICATING, HANDLING, SHIPPING, INSTALLING & BRACING OF TRUSSES. DESIGN CONFORMS WITH APPLICABLE PROVISIONS OF NDS (NATIONAL DESIGN SPEC. BY AF&PA) AND TPI. ALPINE CONNECTOR PLATES ARE MADE OF 20/18/16GA (W.H/S/K) ASTM A653 GRADE 40/60 (W. K/H.S) GALV. STEEL. APPLY PLATES TO EACH FACE OF TRUSS AND, UNLESS OTHERWISE LOCATED ON THIS DESIGN, POSITION PER DRAWINGS 160A-Z. ANY INSPECTION OF PLATES FOLLOWED BY (1) SHALL BE PER ANNEX A3 OF TPI1-2002 SEC.3. A SEAL ON THIS DRAWING INDICATES ACCEPTANCE OF PROFESSIONAL ENGINEERING RESPONSIBILITY SOLELY FOR THE TRUSS COMPONENT DESIGN SHOWN. THE SUITABILITY AND USE OF THIS COMPONENT FOR ANY BUILDING IS THE RESPONSIBILITY OF THE BUILDING DESIGNER PER ANSI/TPI 1 SEC. 2.

ARTHUR R. FISHER
LICENSE
No.59687
STATE OF FLORIDA
PROFESSIONAL ENGINEER

Dec 19 '05

TC LL	20.0 PSF	REF	R487-- 34245
TC DL	10.0 PSF	DATE	12/19/05
BC DL	10.0 PSF	DRW	HCUSR487 05353073
BC LL	0.0 PSF	HC-ENG	DF/AF
TOT.LD.	40.0 PSF	SEQN-	19148
DUR.FAC.	1.25		
SPACING	24.0"	JREF-	1ST2487_Z03

(3-550-SHIRLEY HIPSON - #10 - SHADY OAKS - B6)

Top chord 2x4 SP #2 Dense
Bot chord 2x4 SP #2 Dense
Webs 2x4 SP #3

Deflection meets L/360 live and L/240 total load.

110 mph wind, 15.00 ft mean hgt, ASCE 7-02, CLOSED bldg, not located within 4.50 ft from roof edge, CAT II, EXP B, wind TC DL=5.0 psf, wind BC DL=5.0 psf.

Right end vertical not exposed to wind pressure.

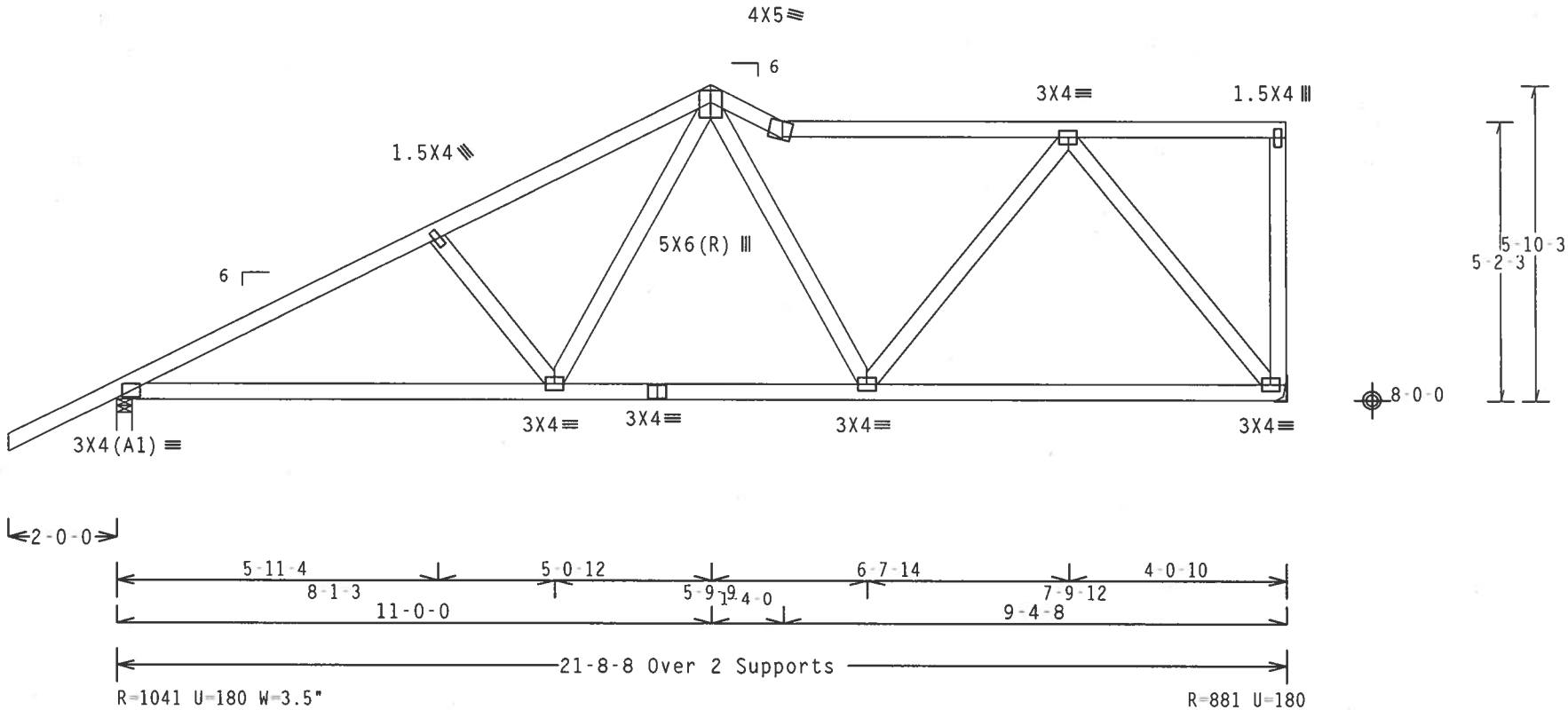

Design Crit: TPI-2002(STD)/FBC

PLT TYP. Wave Cq/RT=1.00(1.25)/10(0) 7.22.11 QTY:1 FL/-/4/-/-/R/- Scale =.3125"/Ft.

ALPINE

Alpine Engineered Products, Inc.
1950 Marley Drive
Haines City, FL 33844
FL Certificate of Authorization # 567

WARNING TRUSSES REQUIRE EXTREME CARE IN FABRICATION, HANDLING, SHIPPING, INSTALLING AND BRACING. REFER TO BCSI 1-03 (BUILDING COMPONENT SAFETY INFORMATION), PUBLISHED BY TPI (TRUSS PLATE INSTITUTE, 583 D'ONOFRIO DR., SUITE 200, MADISON, WI 53719) AND WTCA (WOOD TRUSS COUNCIL OF AMERICA, 6300 ENTERPRISE LN, MADISON, WI 53719) FOR SAFETY PRACTICES PRIOR TO PERFORMING THESE FUNCTIONS. UNLESS OTHERWISE INDICATED, TOP CHORD SHALL HAVE PROPERLY ATTACHED STRUCTURAL PANELS AND BOTTOM CHORD SHALL HAVE A PROPERLY ATTACHED RIGID CEILING.

IMPORTANT FURNISH A COPY OF THIS DESIGN TO THE INSTALLATION CONTRACTOR. ALPINE ENGINEERED PRODUCTS, INC. SHALL NOT BE RESPONSIBLE FOR ANY DEVIATION FROM THIS DESIGN; ANY FAILURE TO BUILD THE TRUSS IN CONFORMANCE WITH TPI; OR FABRICATING, HANDLING, SHIPPING, INSTALLING & BRACING OF TRUSSES. DESIGN CONFORMS WITH APPLICABLE PROVISIONS OF NDS (NATIONAL DESIGN SPEC. BY AF&PA) AND TPI. ALPINE CONNECTOR PLATES ARE MADE OF 20/18/16GA (W,H/S/K) ASTM A653 GRADE 40/60 (W, K/H,S) GALV. STEEL. APPLY PLATES TO EACH FACE OF TRUSS AND, UNLESS OTHERWISE LOCATED ON THIS DESIGN, POSITION PER DRAWINGS 160A-Z. ANY INSPECTION OF PLATES FOLLOWED BY (1) SHALL BE PER ANNEX A3 OF TPI1-2002 SEC.3. A SEAL ON THIS DRAWING INDICATES ACCEPTANCE OF PROFESSIONAL ENGINEERING RESPONSIBILITY SOLELY FOR THE TRUSS COMPONENT DESIGN SHOWN. THE SUITABILITY AND USE OF THIS COMPONENT FOR ANY BUILDING IS THE RESPONSIBILITY OF THE BUILDING DESIGNER PER ANSI/TPI 1 SEC. 2.

ARTHUR R. FISHER LICENSE No.59687 STATE OF FLORIDA PROFESSIONAL ENGINEER

Dec 19 '05

TC LL	20.0 PSF	REF	R487-- 34246
TC DL	10.0 PSF	DATE	12/19/05
BC DL	10.0 PSF	DRW	HCUSR487 05353072
BC LL	0.0 PSF	HC-ENG	DF/AF
TOT.LD.	40.0 PSF	SEQN-	19174
DUR.FAC.	1.25		
SPACING	24.0"	JREF-	1ST2487_Z03

(5 350 SHIRLEY HITSON #10 SHADY OAKS CI GL)

Top chord 2x4 SP #2 Dense
Bot chord 2x4 SP #2 Dense
Webs 2x4 SP #3 :W3 2x4 SP #2 Dense:

SPECIAL LOADS
------(LUMBER DUR.FAC.=1.25 / PLATE DUR.FAC.=1.25)

TC - From	125 PLF	at	-2.00 to	125 PLF	at	0.00
TC - From	128 PLF	at	0.00 to	130 PLF	at	0.33
TC - From	130 PLF	at	0.33 to	143 PLF	at	5.67
TC - From	140 PLF	at	5.67 to	141 PLF	at	5.77
TC - From	171 PLF	at	5.77 to	210 PLF	at	11.00
TC - From	210 PLF	at	11.00 to	211 PLF	at	11.17
TC - From	211 PLF	at	11.17 to	210 PLF	at	11.29
TC - From	180 PLF	at	11.29 to	132 PLF	at	20.89
TC - From	135 PLF	at	20.89 to	131 PLF	at	21.79
TC - From	131 PLF	at	21.79 to	128 PLF	at	22.33
TC - From	125 PLF	at	22.33 to	125 PLF	at	24.33
BC - From	10 PLF	at	0.00 to	10 PLF	at	22.33

+ MEMBER TO BE LATERALLY BRACED FOR WIND LOADS PERPENDICULAR TO TRUSS. BRACING SYSTEM TO BE DESIGNED AND FURNISHED BY OTHERS.

110 mph wind, 15.00 ft mean hgt, ASCE 7-02, CLOSED bldg, Located anywhere in roof, CAT II, EXP B, wind TC DL=5.0 psf, wind BC DL=5.0 psf.

Truss spaced at 24.0" OC designed to support 2-0-0 top chord outlookers. Cladding load shall not exceed 10.00 PSF. Top chord must not be cut or notched.

See DWGS A11015EE0405 & GBLLETIN0405 for more requirements.

Deflection meets L/360 live and L/240 total load.

THE BUILDING DESIGNER IS RESPONSIBLE FOR THE DESIGN OF THE ROOF AND CEILING DIAPHRAGMS, GABLE END SHEAR WALLS, AND SUPPORTING SHEAR WALLS. SHEAR WALLS MUST PROVIDE CONTINUOUS LATERAL RESTRAINT TO THE GABLE END. ALL CONNECTIONS TO BE DESIGNED BY THE BUILDING DESIGNER.

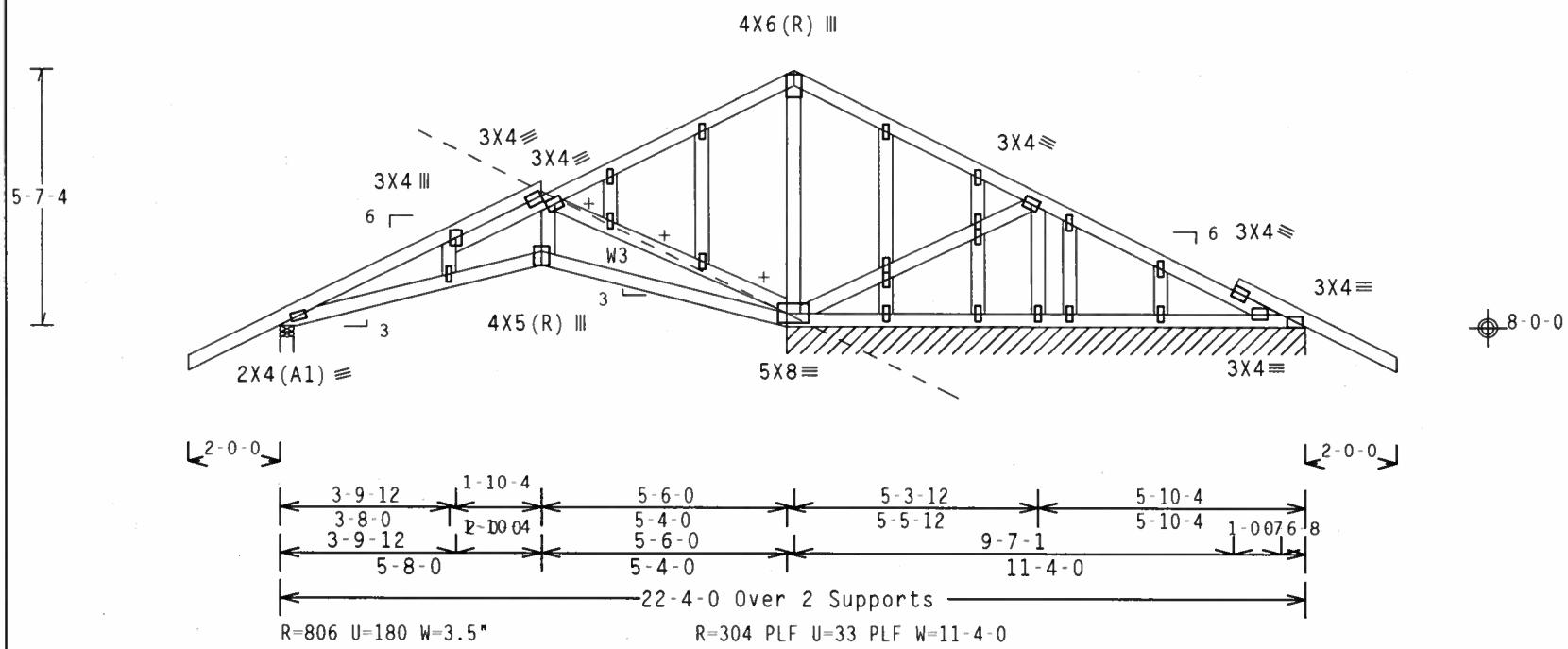

Note: All Plates Are 1.5X4 Except As Shown.

Design Crit: TPI-2002(STD)/FBC

PLT TYP. Wave Cq/RT=1.00(1.25)/10(0) 7.22.1 QTY:1 FL/-/4/-/-/R/- Scale =.25"/Ft.

ALPINE
Alpine Engineered Products, Inc.
1950 Marley Drive
Haines City, FL 33844
FL Certificate of Authorization # 567

WARNING TRUSSES REQUIRE EXTREME CARE IN FABRICATION, HANDLING, SHIPPING, INSTALLING AND BRACING. REFER TO BCSI 1-03 (BUILDING COMPONENT SAFETY INFORMATION), PUBLISHED BY TPI (TRUSS PLATE INSTITUTE, 583 D'ONOFRIO DR., SUITE 200, MADISON, WI 53719) AND WTCA (WOOD TRUSS COUNCIL OF AMERICA, 6300 ENTERPRISE LN. MADISON, WI 53719) FOR SAFETY PRACTICES PRIOR TO PERFORMING THESE FUNCTIONS. UNLESS OTHERWISE INDICATED, TOP CHORD SHALL HAVE PROPERLY ATTACHED STRUCTURAL PANELS AND BOTTOM CHORD SHALL HAVE A PROPERLY ATTACHED RIGID CEILING.

IMPORTANT FURNISH A COPY OF THIS DESIGN TO THE INSTALLATION CONTRACTOR. ALPINE ENGINEERED PRODUCTS, INC. SHALL NOT BE RESPONSIBLE FOR ANY DEVIATION FROM THIS DESIGN; ANY FAILURE TO BUILD THE TRUSS IN CONFORMANCE WITH TPI; OR FABRICATING, HANDLING, SHIPPING, INSTALLING & BRACING OF TRUSSES. DESIGN CONFORMS WITH APPLICABLE PROVISIONS OF NDS (NATIONAL DESIGN SPEC. BY AF&PA) AND TPI. ALPINE CONNECTOR PLATES ARE MADE OF 20/18/16GA (W,H/S/K) ASTM A653 GRADE 40/60 (W, K/H,S) GALV. STEEL. APPLY PLATES TO EACH FACE OF TRUSS AND, UNLESS OTHERWISE LOCATED ON THIS DESIGN, POSITION PER DRAWINGS 160A-Z. ANY INSPECTION OF PLATES FOLLOWED BY (1) SHALL BE PER ANNEX A3 OF TPI1-2002 SEC.3. A SEAL ON THIS DRAWING INDICATES ACCEPTANCE OF PROFESSIONAL ENGINEERING RESPONSIBILITY SOLELY FOR THE TRUSS COMPONENT DESIGN SHOWN. THE SUITABILITY AND USE OF THIS COMPONENT FOR ANY BUILDING IS THE RESPONSIBILITY OF THE BUILDING DESIGNER PER ANSI/TPI 1 SEC. 2.

ARTHUR R. FISHER LICENSE No.59687 STATE OF FLORIDA PROFESSIONAL ENGINEER
Dec 19 '05

TC LL	20.0 PSF	REF	R487-- 34247
TC DL	10.0 PSF	DATE	12/19/05
BC DL	10.0 PSF	DRW	HCUSR487 05353076
BC LL	0.0 PSF	HC-ENG	DF/AF
TOT.LD.	40.0 PSF	SEQN-	19126 REV
DUR.FAC.	1.25		
SPACING	SEE ABOVE	JREF-	1ST2487_Z03

(5-550-SHIRLEY HITSON - #10 SHADY OAKS - C2)

Top chord 2x4 SP #2 Dense
Bot chord 2x4 SP #2 Dense
Webs 2x4 SP #3

(A) Continuous lateral bracing equally spaced on member.

110 mph wind, 15.00 ft mean hgt, ASCE 7-02, CLOSED bldg, not located within 4.50 ft from roof edge, CAT II, EXP B, wind TC DL=5.0 psf, wind BC DL=5.0 psf.

Deflection meets L/360 live and L/240 total load.

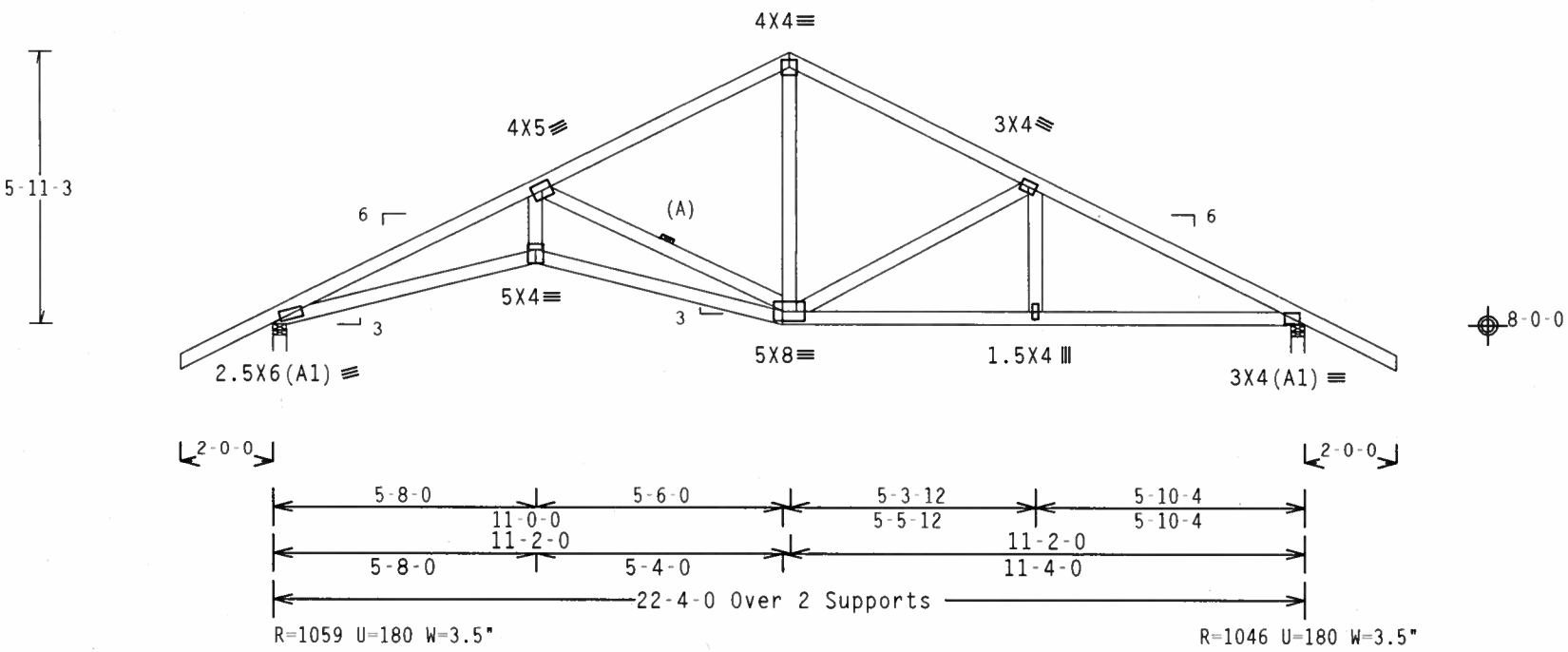

Design Crit: TPI-2002(STD)/FBC
Cq/RT=1.00(1.25)/10(0) 7.22.11 QTY:1 FL/-/4/-/-/R/- Scale =.25"/Ft.

PLT TYP. Wave

ALPINE
Alpine Engineered Products, Inc.
1950 Marley Drive
Haines City, FL 33844
FL Certificate of Authorization # 567

WARNING TRUSSES REQUIRE EXTREME CARE IN FABRICATION, HANDLING, SHIPPING, INSTALLING AND BRACING. REFER TO BCSI 1-03 (BUILDING COMPONENT SAFETY INFORMATION), PUBLISHED BY TPI (TRUSS PLATE INSTITUTE, 583 D'ONOFRIO DR., SUITE 200, MADISON, WI 53719) AND WTCA (WOOD TRUSS COUNCIL OF AMERICA, 6300 ENTERPRISE LN. MADISON, WI 53719) FOR SAFETY PRACTICES PRIOR TO PERFORMING THESE FUNCTIONS. UNLESS OTHERWISE INDICATED, TOP CHORD SHALL HAVE PROPERLY ATTACHED STRUCTURAL PANELS AND BOTTOM CHORD SHALL HAVE A PROPERLY ATTACHED RIGID CEILING.

IMPORTANT FURNISH A COPY OF THIS DESIGN TO THE INSTALLATION CONTRACTOR. ALPINE ENGINEERED PRODUCTS, INC. SHALL NOT BE RESPONSIBLE FOR ANY DEVIATION FROM THIS DESIGN; ANY FAILURE TO BUILD THE TRUSS IN CONFORMANCE WITH TPI; OR FABRICATING, HANDLING, SHIPPING, INSTALLING & BRACING OF TRUSSES. DESIGN CONFORMS WITH APPLICABLE PROVISIONS OF NDS (NATIONAL DESIGN SPEC. BY AF&PA) AND TPI. ALPINE CONNECTOR PLATES ARE MADE OF 20/18/16GA (W,H/S/K) ASTM A653 GRADE 40/60 (W, K/H,S) GALV. STEEL. APPLY PLATES TO EACH FACE OF TRUSS AND, UNLESS OTHERWISE LOCATED ON THIS DESIGN, POSITION PER DRAWINGS 160A-Z. ANY INSPECTION OF PLATES FOLLOWED BY (1) SHALL BE PER ANNEX A3 OF TPI1-2002 SEC.3. A SEAL ON THIS DRAWING INDICATES ACCEPTANCE OF PROFESSIONAL ENGINEERING RESPONSIBILITY SOLELY FOR THE TRUSS COMPONENT DESIGN SHOWN. THE SUITABILITY AND USE OF THIS COMPONENT FOR ANY BUILDING IS THE RESPONSIBILITY OF THE BUILDING DESIGNER PER ANSI/TPI 1 SEC. 2.

ARTHUR R. FISHER
LICENSE
No.59687
STATE OF FLORIDA
PROFESSIONAL ENGINEER
Dec 19 '05

TC LL	20.0 PSF	REF	R487-- 34248
TC DL	10.0 PSF	DATE	12/19/05
BC DL	10.0 PSF	DRW	HCUSR487 05353079
BC LL	0.0 PSF	HC-ENG	DF/AF *
TOT.LD.	40.0 PSF	SEQN-	19115
DUR.FAC.	1.25		
SPACING	24.0"	JREF-	1ST2487_Z03

(5-550-SHIRLEY HITSON - #10 SHADY OAKS - C3)

Top chord 2x4 SP #2 Dense
Bot chord 2x4 SP #2 Dense
Webs 2x4 SP #3

(A) Continuous lateral bracing equally spaced on member.

110 mph wind, 15.00 ft mean hgt, ASCE 7-02, CLOSED bldg, not located within 4.50 ft from roof edge, CAT II, EXP B, wind TC DL=5.0 psf, wind BC DL=5.0 psf.

Deflection meets L/360 live and L/240 total load.

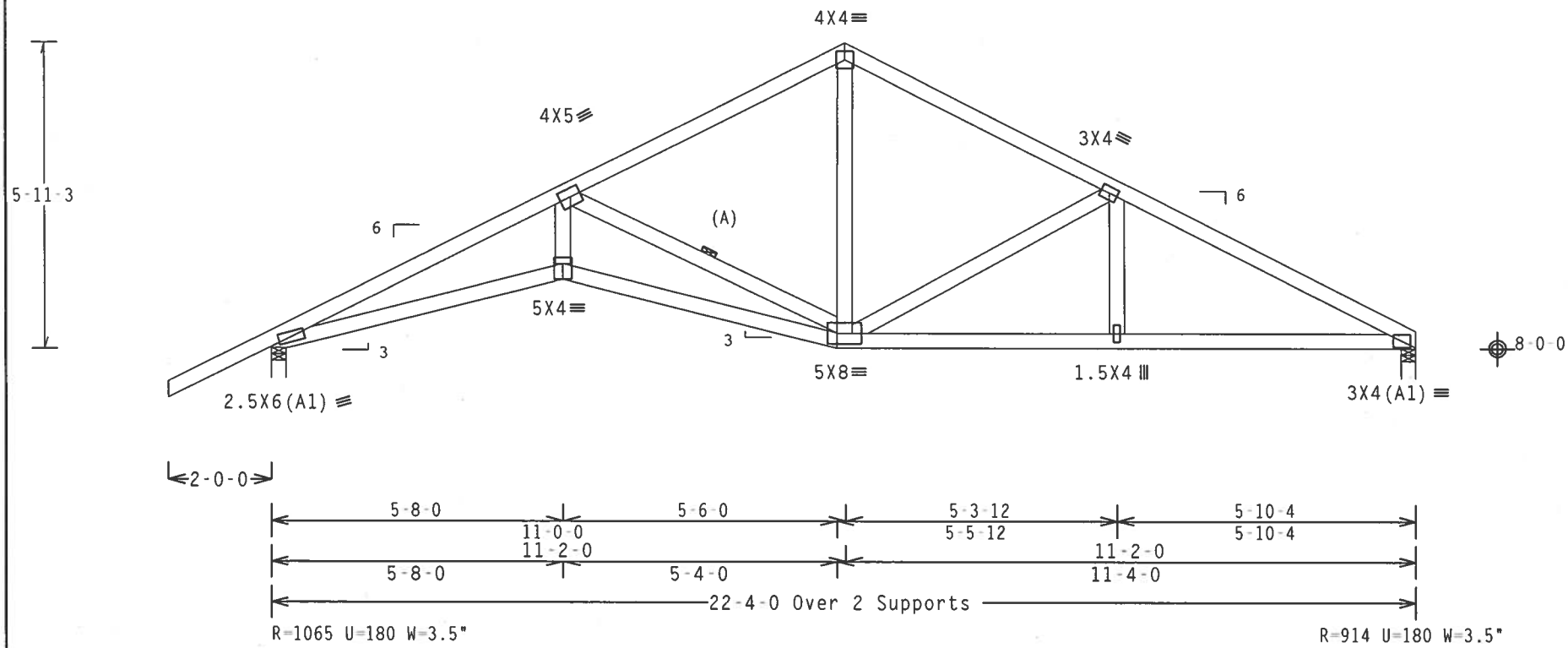

Design Crit: TPI-2002(STD)/FBC

PLT TYP. Wave Cq/RT=1.00(1.25)/10(0) 7.22.1 QTY:4 FL/-/4/-/-/R/- Scale =.3125"/Ft.

ALPINE

Alpine Engineered Products, Inc.
1950 Marley Drive
Haines City, FL 33844
FL Certificate of Authorization # 567

WARNING TRUSSES REQUIRE EXTREME CARE IN FABRICATION, HANDLING, SHIPPING, INSTALLING AND BRACING. REFER TO BCSI 1-03 (BUILDING COMPONENT SAFETY INFORMATION), PUBLISHED BY TPI (TRUSS PLATE INSTITUTE, 583 D'ONOFRIO DR., SUITE 200, MADISON, WI 53719) AND WTCA (WOOD TRUSS COUNCIL OF AMERICA, 6300 ENTERPRISE LN. MADISON, WI 53719) FOR SAFETY PRACTICES PRIOR TO PERFORMING THESE FUNCTIONS. UNLESS OTHERWISE INDICATED, TOP CHORD SHALL HAVE PROPERLY ATTACHED STRUCTURAL PANELS AND BOTTOM CHORD SHALL HAVE A PROPERLY ATTACHED RIGID CEILING.

IMPORTANT FURNISH A COPY OF THIS DESIGN TO THE INSTALLATION CONTRACTOR. ALPINE ENGINEERED PRODUCTS, INC. SHALL NOT BE RESPONSIBLE FOR ANY DEVIATION FROM THIS DESIGN; ANY FAILURE TO BUILD THE TRUSS IN CONFORMANCE WITH TPI; OR FABRICATING, HANDLING, SHIPPING, INSTALLING & BRACING OF TRUSSES. DESIGN CONFORMS WITH APPLICABLE PROVISIONS OF NDS (NATIONAL DESIGN SPEC. BY AF&PA) AND TPI. ALPINE CONNECTOR PLATES ARE MADE OF 20/18/16GA (W,H/S/K) ASTM A653 GRADE 40/60 (W, K/H,S) GALV. STEEL. APPLY PLATES TO EACH FACE OF TRUSS AND, UNLESS OTHERWISE LOCATED ON THIS DESIGN, POSITION PER DRAWINGS 160A-Z. ANY INSPECTION OF PLATES FOLLOWED BY (I) SHALL BE PER ANNEX A3 OF TPI1-2002 SEC.3. A SEAL ON THIS DRAWING INDICATES ACCEPTANCE OF PROFESSIONAL ENGINEERING RESPONSIBILITY SOLELY FOR THE TRUSS COMPONENT DESIGN SHOWN. THE SUITABILITY AND USE OF THIS COMPONENT FOR ANY BUILDING IS THE RESPONSIBILITY OF THE BUILDING DESIGNER PER ANSI/TPI 1 SEC. 2.

ARTHUR R. FISHER
LICENSE
No.59687
STATE OF
FLORIDA
PROFESSIONAL ENGINEER

Dec 19 '05

TC LL	20.0 PSF	REF	R487-- 34249
TC DL	10.0 PSF	DATE	12/19/05
BC DL	10.0 PSF	DRW	HCUSR487 05353080
BC LL	0.0 PSF	HC-ENG	DF/AF *
TOT.LD.	40.0 PSF	SEQN-	19109
DUR.FAC.	1.25		
SPACING	24.0"	JREF-	1ST2487_Z03

(5-550-SHIRLEY HITSON - #10 SHADY OAKS - C4G)

Top chord 2x4 SP #2 Dense
Bot chord 2x6 SP #1 Dense
Webs 2x4 SP #3

110 mph wind, 15.00 ft mean hgt, ASCE 7-02, CLOSED bldg, Located anywhere in roof, CAT I, EXP C, wind TC DL=5.0 psf, wind BC DL=5.0 psf.

Girder supports 22-0-0 span to BC one face and 2-0-0 span to TC/BC split opposite face.

2 COMPLETE TRUSSES REQUIRED

Nailing Schedule: (10d_Common_(0.148"x3",_min.)_nails)
Top Chord: 1 Row @12.00" o.c.
Bot Chord: 1 Row @ 9.00" o.c.
Webs : 1 Row @ 4" o.c.
Use equal spacing between rows and stagger nails in each row to avoid splitting.

Deflection meets L/360 live and L/240 total load.

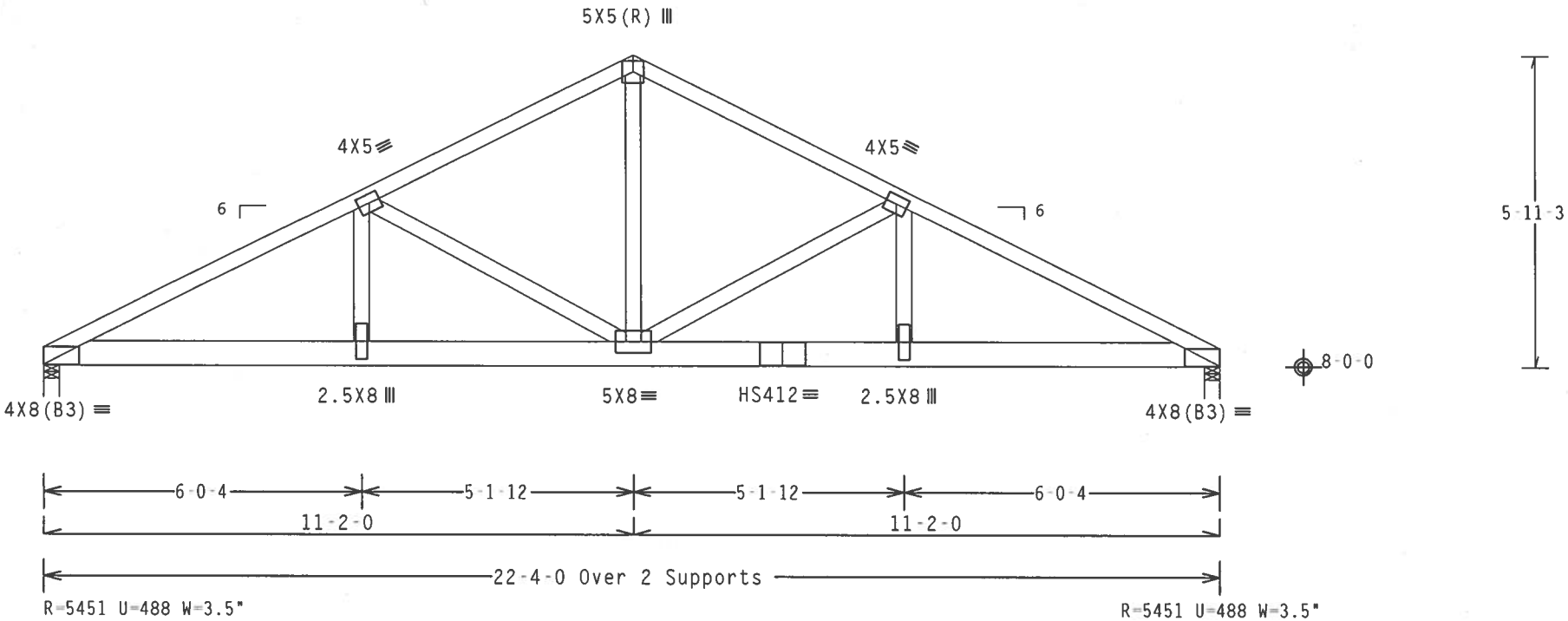

Design Crit: TPI-2002(STD)/FBC
PLT TYP. 20 Gauge HS,Wave Cq/RT=1.00(1.25)/10(0) 7.22.11 QTY:1 FL/-/4/-/-/R/- Scale =.3125"/Ft.

ALPINE
Alpine Engineered Products, Inc.
1950 Marley Drive
Haines City, FL 33844
FL Certificate of Authorization # 567

WARNING TRUSSES REQUIRE EXTREME CARE IN FABRICATION, HANDLING, SHIPPING, INSTALLING AND BRACING. REFER TO BCSI 1-03 (BUILDING COMPONENT SAFETY INFORMATION), PUBLISHED BY TPI (TRUSS PLATE INSTITUTE, 583 D'ONOFRIO DR., SUITE 200, MADISON, WI 53719) AND WTCA (WOOD TRUSS COUNCIL OF AMERICA, 6300 ENTERPRISE LN. MADISON, WI 53719) FOR SAFETY PRACTICES PRIOR TO PERFORMING THESE FUNCTIONS. UNLESS OTHERWISE INDICATED, TOP CHORD SHALL HAVE PROPERLY ATTACHED STRUCTURAL PANELS AND BOTTOM CHORD SHALL HAVE A PROPERLY ATTACHED RIGID CEILING.

IMPORTANTFURNISH A COPY OF THIS DESIGN TO THE INSTALLATION CONTRACTOR. ALPINE ENGINEERED PRODUCTS, INC. SHALL NOT BE RESPONSIBLE FOR ANY DEVIATION FROM THIS DESIGN; ANY FAILURE TO BUILD THE TRUSS IN CONFORMANCE WITH TPI; OR FABRICATING, HANDLING, SHIPPING, INSTALLING & BRACING OF TRUSSES. DESIGN CONFORMS WITH APPLICABLE PROVISIONS OF NDS (NATIONAL DESIGN SPEC. BY AF&PA) AND TPI. ALPINE CONNECTOR PLATES ARE MADE OF 20/18/16GA (W,H/S/K) ASTM A653 GRADE 40/60 (W, K/H,S) GALV. STEEL. APPLY PLATES TO EACH FACE OF TRUSS AND, UNLESS OTHERWISE LOCATED ON THIS DESIGN, POSITION PER DRAWINGS 160A-Z. ANY INSPECTION OF PLATES FOLLOWED BY (1) SHALL BE PER ANNEX A3 OF TPI1-2002 SEC.3. A SEAL ON THIS DRAWING INDICATES ACCEPTANCE OF PROFESSIONAL ENGINEERING RESPONSIBILITY SOLELY FOR THE TRUSS COMPONENT DESIGN SHOWN. THE SUITABILITY AND USE OF THIS COMPONENT FOR ANY BUILDING IS THE RESPONSIBILITY OF THE BUILDING DESIGNER PER ANSI/TPI 1 SEC. 2.

ARTHUR R. FISHER LICENSE No.59687 STATE OF FLORIDA PROFESSIONAL ENGINEER
Dec 19 '05

TC LL	20.0 PSF	REF	R487-- 34250
TC DL	10.0 PSF	DATE	12/19/05
BC DL	10.0 PSF	DRW	HCUSR487 05353081
BC LL	0.0 PSF	HC-ENG	DF/AF
TOT.LD.	40.0 PSF	SEQN-	67240
DUR.FAC.	1.25		
SPACING	SEE ABOVE	JREF-	1ST2487_Z03

(5-550-SHIRLEY HITSON - #10 SHADY OAKS - DI-GE)

Top chord 2x4 SP #2 Dense
Bot chord 2x4 SP #2 Dense
Webs 2x4 SP #3
:Stack Chord SC1 2x4 SP #2 Dense:
:Stack Chord SC2 2x4 SP #2 Dense:

SPECIAL LOADS
-------(LUMBER DUR.FAC.=1.25 / PLATE DUR.FAC.=1.25)

TC - From	62 PLF	at -2.00	to	62 PLF	at 2.00
TC - From	60 PLF	at 2.00	to	60 PLF	at 12.67
TC - From	62 PLF	at 12.67	to	62 PLF	at 16.67
BC - From	4 PLF	at -2.00	to	4 PLF	at 0.00
BC - From	20 PLF	at 0.00	to	20 PLF	at 14.67
BC - From	4 PLF	at 14.67	to	4 PLF	at 16.67

Deflection meets L/360 live and L/240 total load.

THE BUILDING DESIGNER IS RESPONSIBLE FOR THE DESIGN OF THE ROOF AND CEILING DIAPHRAGMS, GABLE END SHEAR WALLS, AND SUPPORTING SHEAR WALLS. SHEAR WALLS MUST PROVIDE CONTINUOUS LATERAL RESTRAINT TO THE GABLE END. ALL CONNECTIONS TO BE DESIGNED BY THE BUILDING DESIGNER.

110 mph wind, 15.00 ft mean hgt, ASCE 7-02, CLOSED bldg, Located anywhere in roof, CAT II, EXP B, wind TC DL=5.0 psf, wind BC DL=5.0 psf.

See DWGS A11015EE0405 & GBLLETIN0405 for more requirements.

In lieu of structural panels use purlins to brace TC @ 24" OC.

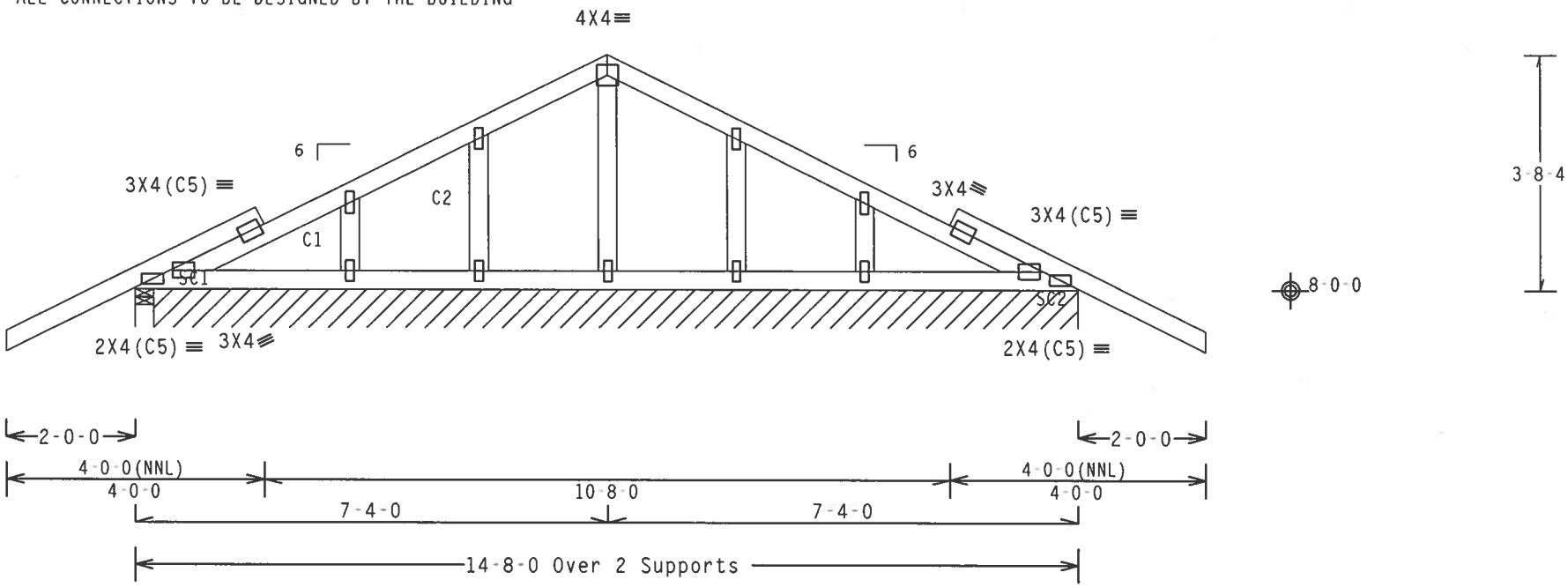

Note: All Plates Are 1.5X4 Except As Shown.

Design Crit: TPI-2002(STD)/FBC

PLT TYP. Wave Cq/RT=1.00(1.25)/10(0) 7.22.11 QTY:1 FL/-/4/-/-/R/- Scale =.375"/Ft.

ALPINE
Alpine Engineered Products, Inc.
1950 Marley Drive
Haines City, FL 33844
FL Certificate of Authorization # 567

WARNING TRUSSES REQUIRE EXTREME CARE IN FABRICATION, HANDLING, SHIPPING, INSTALLING AND BRACING. REFER TO BCSI 1-03 (BUILDING COMPONENT SAFETY INFORMATION), PUBLISHED BY TPI (TRUSS PLATE INSTITUTE, 583 D'ONOFRIO DR., SUITE 200, MADISON, WI 53719) AND WTCA (WOOD TRUSS COUNCIL OF AMERICA, 6300 ENTERPRISE LN, MADISON, WI 53719) FOR SAFETY PRACTICES PRIOR TO PERFORMING THESE FUNCTIONS. UNLESS OTHERWISE INDICATED, TOP CHORD SHALL HAVE PROPERLY ATTACHED STRUCTURAL PANELS AND BOTTOM CHORD SHALL HAVE A PROPERLY ATTACHED RIGID CEILING.

IMPORTANT FURNISH A COPY OF THIS DESIGN TO THE INSTALLATION CONTRACTOR. ALPINE ENGINEERED PRODUCTS, INC. SHALL NOT BE RESPONSIBLE FOR ANY DEVIATION FROM THIS DESIGN; ANY FAILURE TO BUILD THE TRUSS IN CONFORMANCE WITH TPI; OR FABRICATING, HANDLING, SHIPPING, INSTALLING & BRACING OF TRUSSES. DESIGN CONFORMS WITH APPLICABLE PROVISIONS OF NDS (NATIONAL DESIGN SPEC. BY AF&PA) AND TPI. ALPINE CONNECTOR PLATES ARE MADE OF 20/18/16GA (W,H/S/K) ASTM A653 GRADE 40/60 (W, K/H,S) GALV. STEEL. APPLY PLATES TO EACH FACE OF TRUSS AND, UNLESS OTHERWISE LOCATED ON THIS DESIGN, POSITION PER DRAWINGS 160A-Z. ANY INSPECTION OF PLATES FOLLOWED BY (I) SHALL BE PER ANNEX A3 OF TPI1-2002 SEC.3. A SEAL ON THIS DRAWING INDICATES ACCEPTANCE OF PROFESSIONAL ENGINEERING RESPONSIBILITY SOLELY FOR THE TRUSS COMPONENT DESIGN SHOWN. THE SUITABILITY AND USE OF THIS COMPONENT FOR ANY BUILDING IS THE RESPONSIBILITY OF THE BUILDING DESIGNER PER ANSI/TPI 1 SEC. 2.

ARTHUR R. FISHER LICENSE No. 39687 STATE OF FLORIDA PROFESSIONAL ENGINEER

Dec 19 '05

TC LL	20.0 PSF	REF	R487-- 34251
TC DL	10.0 PSF	DATE	12/19/05
BC DL	10.0 PSF	DRW	HCUSR487 05353082
BC LL	0.0 PSF	HC-ENG	DF/AF
TOT.LD.	40.0 PSF	SEQN-	67233
DUR.FAC.	1.25		
SPACING	SEE ABOVE	JREF-	1ST2487_Z03

(5-550 SHIRLEY HIRSON - #10 SHADY OAKS - D2G)

Top chord 2x4 SP #2 Dense
Bot chord 2x6 SP #2
Webs 2x4 SP #3

110 mph wind, 15.00 ft mean hgt, ASCE 7-02, CLOSED bldg, Located anywhere in roof, CAT I, EXP C, wind TC DL=5.0 psf, wind BC DL=5.0 psf.

Girder supports 22-0-0 span to BC one face and 2-0-0 span to TC/BC split opposite face.

2 COMPLETE TRUSSES REQUIRED

Nailing Schedule: (10d_Common_(0.148"x3",_min.)_nails)
Top Chord: 1 Row @12.00" o.c.
Bot Chord: 1 Row @ 9.00" o.c.
Webs : 1 Row @ 4" o.c.
Use equal spacing between rows and stagger nails in each row to avoid splitting.

Deflection meets L/360 live and L/240 total load.

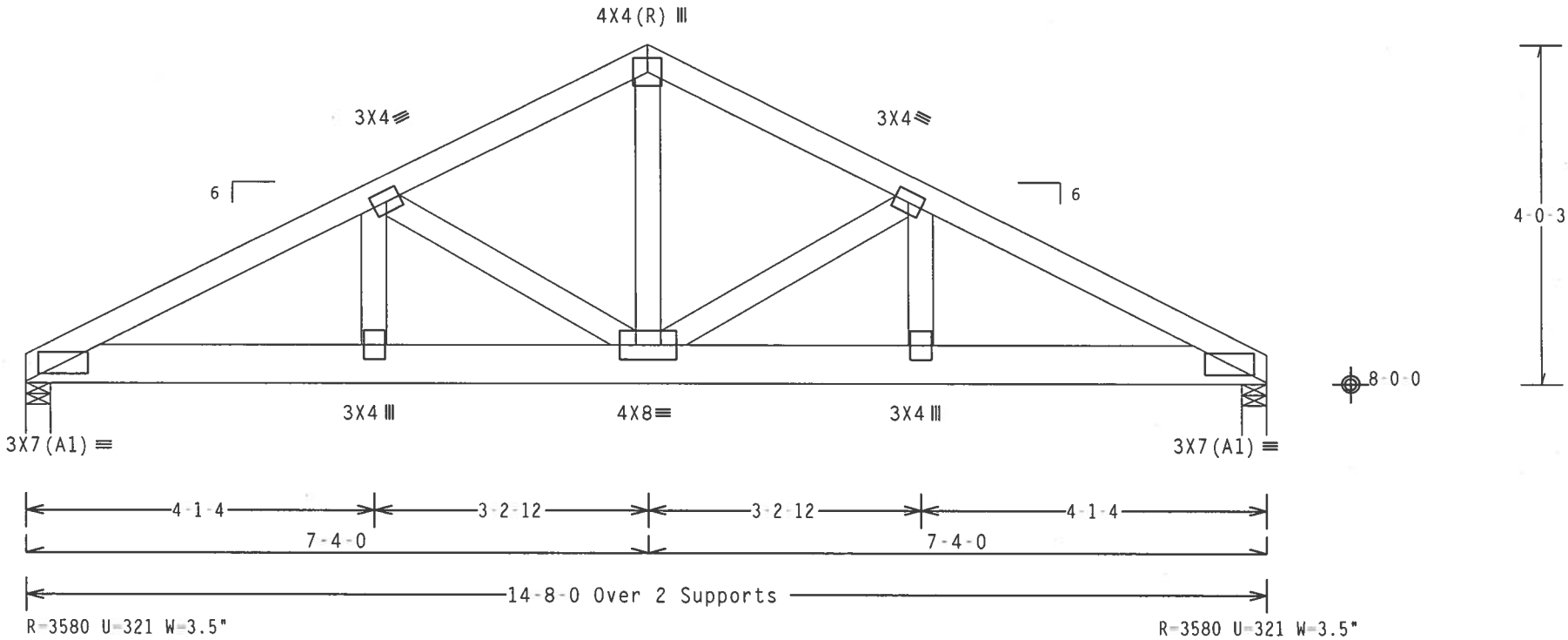

Design Crit: TPI-2002(STD)/FBC

PLT TYP. Wave Cq/RT=1.00(1.25)/10(0) 7.22.1 QTY:1 FL/-/4/-/-/R/- Scale =.5"/Ft.

ALPINE
Alpine Engineered Products, Inc.
1950 Marley Drive
Haines City, FL 33844
FL Certificate of Authorization # 567

WARNING TRUSSES REQUIRE EXTREME CARE IN FABRICATION, HANDLING, SHIPPING, INSTALLING AND BRACING. REFER TO BCSI 1-03 (BUILDING COMPONENT SAFETY INFORMATION), PUBLISHED BY TPI (TRUSS PLATE INSTITUTE, 583 D'ONOFRIO DR., SUITE 200, MADISON, WI 53719) AND WTCA (WOOD TRUSS COUNCIL OF AMERICA, 6300 ENTERPRISE LN, MADISON, WI 53719) FOR SAFETY PRACTICES PRIOR TO PERFORMING THESE FUNCTIONS. UNLESS OTHERWISE INDICATED, TOP CHORD SHALL HAVE PROPERLY ATTACHED STRUCTURAL PANELS AND BOTTOM CHORD SHALL HAVE A PROPERLY ATTACHED RIGID CEILING.

IMPORTANT FURNISH A COPY OF THIS DESIGN TO THE INSTALLATION CONTRACTOR. ALPINE ENGINEERED PRODUCTS, INC. SHALL NOT BE RESPONSIBLE FOR ANY DEVIATION FROM THIS DESIGN; ANY FAILURE TO BUILD THE TRUSS IN CONFORMANCE WITH TPI; OR FABRICATING, HANDLING, SHIPPING, INSTALLING & BRACING OF TRUSSES. DESIGN CONFORMS WITH APPLICABLE PROVISIONS OF NDS (NATIONAL DESIGN SPEC. BY AF&PA) AND TPI. ALPINE CONNECTOR PLATES ARE MADE OF 20/18/16GA (W.H/S/K) ASTM A653 GRADE 40/60 (W. K/H.S) GALV. STEEL. APPLY PLATES TO EACH FACE OF TRUSS AND, UNLESS OTHERWISE LOCATED ON THIS DESIGN, POSITION PER DRAWINGS 160A-Z. ANY INSPECTION OF PLATES FOLLOWED BY (I) SHALL BE PER ANNEX A3 OF TPI1-2002 SEC.3. A SEAL ON THIS DRAWING INDICATES ACCEPTANCE OF PROFESSIONAL ENGINEERING RESPONSIBILITY SOLELY FOR THE TRUSS COMPONENT DESIGN SHOWN. THE SUITABILITY AND USE OF THIS COMPONENT FOR ANY BUILDING IS THE RESPONSIBILITY OF THE BUILDING DESIGNER PER ANSI/TPI 1 SEC. 2.

ARTHUR R. FISHER LICENSE No. 59687 STATE OF FLORIDA PROFESSIONAL ENGINEER

Dec 19 '05

TC LL	20.0 PSF	REF	R487-- 34252
TC DL	10.0 PSF	DATE	12/19/05
BC DL	10.0 PSF	DRW	HCUSR487 05353083
BC LL	0.0 PSF	HC-ENG	DF/AF
TOT.LD.	40.0 PSF	SEQN-	67227
DUR.FAC.	1.25		
SPACING	SEE ABOVE	JREF-	1ST2487_Z03

CLB WEB BRACE SUBSTITUTION

THIS DETAIL IS TO BE USED WHEN CONTINUOUS LATERAL BRACING (CLB) IS SPECIFIED ON AN ALPINE TRUSS DESIGN BUT AN ALTERNATIVE WEB BRACING METHOD IS DESIRED.

NOTES:

THIS DETAIL IS ONLY APPLICABLE FOR CHANGING THE SPECIFIED CLB SHOWN ON SINGLE PLY SEALED DESIGNS TO T-BRACING OR SCAB BRACING.

ALTERNATIVE BRACING SPECIFIED IN CHART BELOW MAY BE CONSERVATIVE. FOR MINIMUM ALTERNATIVE BRACING, RE-RUN DESIGN WITH APPROPRIATE BRACING.

WEB MEMBER SIZE	SPECIFIED CLB BRACING	ALTERNATIVE BRACING T OR L-BRACE	ALTERNATIVE BRACING SCAB BRACE
2X3 OR 2X4	1 ROW	2X4	1-2X4
2X3 OR 2X4	2 ROWS	2X6	2-2X4
2X6	1 ROW	2X4	1-2X6
2X6	2 ROWS	2X6	2-2X4(*)
2X8	1 ROW	2X6	1-2X8
2X8	2 ROWS	2X6	2-2X6(*)

T-BRACE, L-BRACE AND SCAB BRACE TO BE SAME SPECIES AND GRADE OR BETTER THAN WEB MEMBER UNLESS SPECIFIED OTHERWISE ON ENGINEER'S SEALED DESIGN.

(*) CENTER SCAB ON WIDE FACE OF WEB. APPLY (1) SCAB TO EACH FACE OF WEB.

T-BRACING OR L-BRACING:

APPLY TO EITHER SIDE OF WEB NARROW FACE

ATTACH WITH 16d NAILS AT 6" O.C.

BRACE IS A MINIMUM 80% OF WEB MEMBER LENGTH

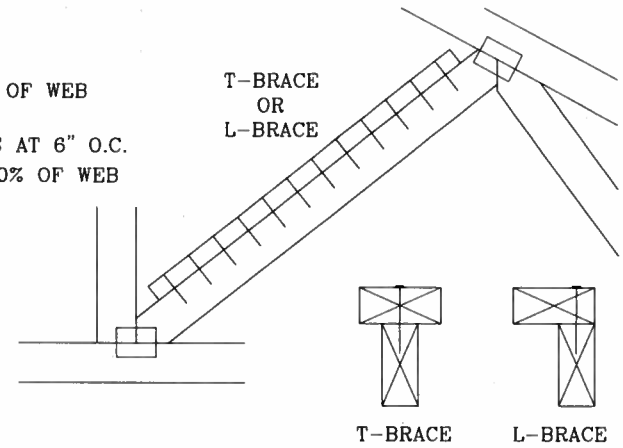

SCAB BRACING:

APPLY SCAB(S) TO WIDE FACE OF WEB.

NO MORE THAN (1) SCAB PER FACE.

ATTACH WITH 10d OR .128"x3" GUN NAILS AT 6" O.C. BRACE IS A MINIMUM 80% OF WEB MEMBER LENGTH

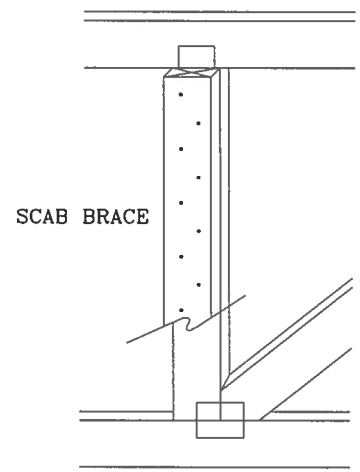

THIS DRAWING REPLACES DRAWING 579,640

ALPINE

ALPINE ENGINEERED PRODUCTS, INC.
POMPANO BEACH, FLORIDA

WARNING TRUSSES REQUIRE EXTREME CARE IN FABRICATING, HANDLING, SHIPPING, INSTALLING AND BRACING. REFER TO BCSI 1-03 (BUILDING COMPONENT SAFETY INFORMATION), PUBLISHED BY TPI (TRUSS PLATE INSTITUTE, 583 D'ONOFRIO DR., SUITE 200, MADISON, WI. 53719) AND WTCA (WOOD TRUSS COUNCIL OF AMERICA, 6300 ENTERPRISE LN, MADISON, WI 53719) FOR SAFETY PRACTICES PRIOR TO PERFORMING THESE FUNCTIONS. UNLESS OTHERWISE INDICATED, TOP CHORD SHALL HAVE PROPERLY ATTACHED STRUCTURAL PANELS AND BOTTOM CHORD SHALL HAVE A PROPERLY ATTACHED RIGID CEILING.

IMPORTANT FURNISH COPY OF THIS DESIGN TO INSTALLATION CONTRACTOR. ALPINE ENGINEERED PRODUCTS, INC., SHALL NOT BE RESPONSIBLE FOR ANY DEVIATION FROM THIS DESIGN; ANY FAILURE TO BUILD THE TRUSS IN CONFORMANCE WITH TPI; OR FABRICATING, HANDLING, SHIPPING, INSTALLING & BRACING OF TRUSSES. DESIGN CONFORMS WITH APPLICABLE PROVISIONS OF NDS (NATIONAL DESIGN SPEC. BY AF&PA) AND TPI. ALPINE CONNECTOR PLATES ARE MADE OF 20/18/16GA (W,H/S/K) ASTM A653 GRADE 40/60 (W,K/H,S) GALV. STEEL. APPLY PLATES TO EACH FACE OF TRUSS AND, UNLESS OTHERWISE LOCATED ON THIS DESIGN, POSITION PER DRAWINGS 160A-Z. ANY INSPECTION OF PLATES FOLLOWED BY (I) SHALL BE PER ANNEX A3 OF TPI 1-2002 SEC. 3. A SEAL ON THIS DRAWING INDICATES ACCEPTANCE OF PROFESSIONAL ENGINEERING RESPONSIBILITY SOLELY FOR THE TRUSS COMPONENT DESIGN SHOWN. THE SUITABILITY AND USE OF THIS COMPONENT FOR ANY BUILDING IS THE RESPONSIBILITY OF THE BUILDING DESIGNER, PER ANSI/TPI 1 SEC. 2.

ARTHUR R. FISHER
LICENSE
No. 59687
STATE OF FLORIDA
PROFESSIONAL ENGINEER

TC LL	PSF	REF CLB SUBST.
TC DL	PSF	DATE 11/26/03
BC DL	PSF	DRWG BRCLBSUB1103
BC LL	PSF	-ENG MLH/KAR
TOT. LD.	PSF	
DUR. FAC.		
SPACING		

NOTICE OF INSPECTION AND/OR TREATMENT

Date of Inspection
5/2/06

Date of Treatment
Termidor

Pesticide Used
sub Termites

Wood-Destroying Organisms Treated
24415

Notice
It is a violation of Florida State Law (Chap. 482.226) for anyone other than the property owner to remove this notice.

Address:
Pestmaster Services of Lake City
879 S.W. Arlington Blvd., Suite 106 • Lake City, FL 32025

(Porches)

NOTICE OF INSPECTION AND/OR TREATMENT

24415

Date of Inspection
5/29/06

Date of Treatment
Termidor

Pesticide Used
sub Termites

Wood-Destroying Organisms Treated

Notice
It is a violation of Florida State Law (Chap. 482.226) for anyone other than the property owner to remove this notice.

Address:
Pestmaster Services of Lake City
879 S.W. Arlington Blvd., Suite 106 • Lake City, FL 32025

STRUCTURAL PLAN NOTES

SN-1 ALL LOAD BEARING FRAME WALL & PORCH HEADERS SHALL BE A MINIMUM OF (2) 2X12 SYP#2 (U.N.O.)

SN-2 ALL LOAD BEARING FRAME WALL HEADERS SHALL HAVE (1) JACK STUD & (1) KING STUD EACH SIDE (U.N.O.)

SN-3 DIMENSIONS ON STRUCTURAL SHEETS ARE NOT EXACT. REFER TO ARCHITECTURAL FLOOR PLAN FOR ACTUAL DIMENSIONS

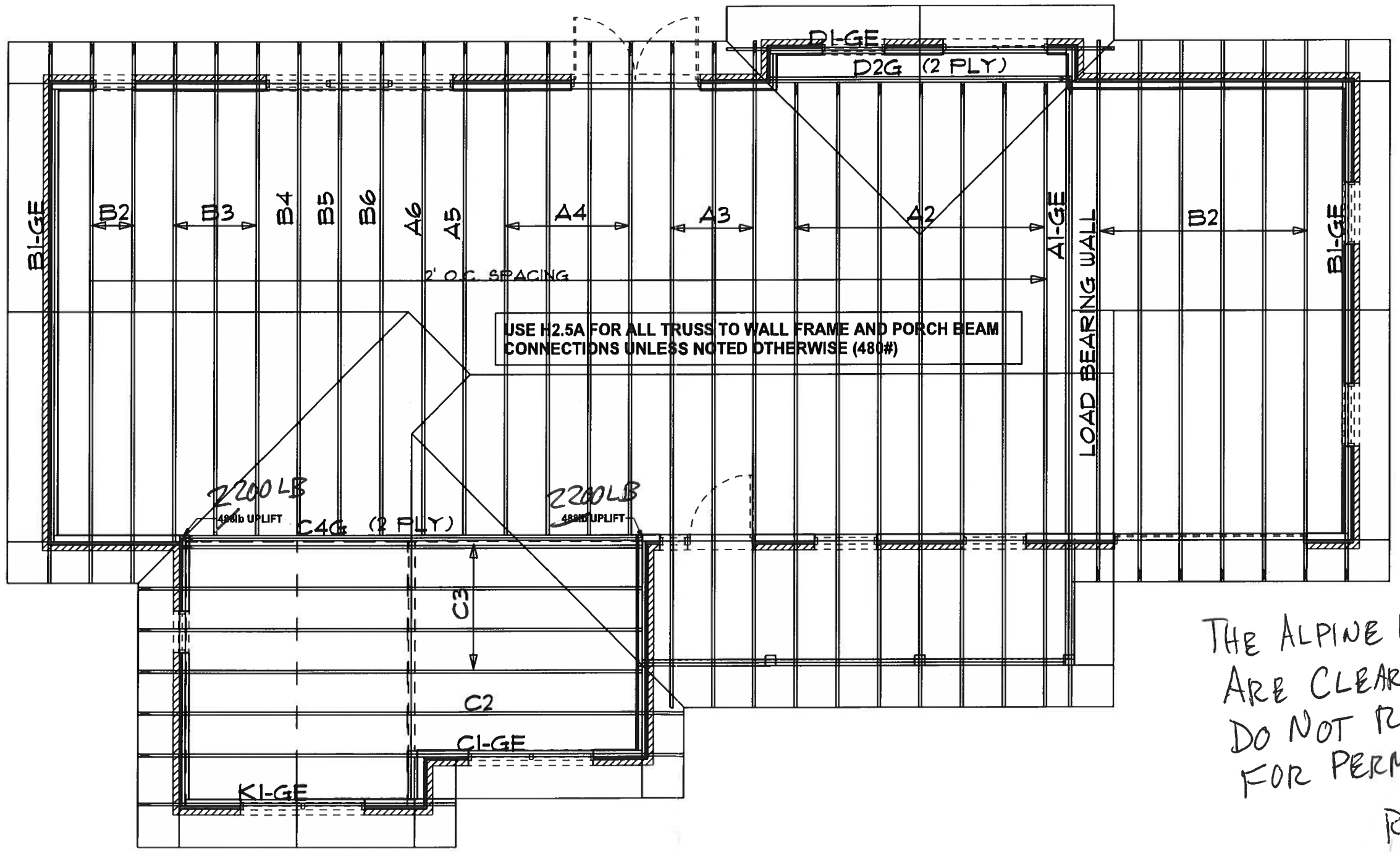

THE ALPINE UPLIFT VALUES ARE CLEARLY NOT ACCURATE, DO NOT RELY ON THEM FOR PERMITTING

REVIEWED
09 JAN 06
PR539115

#5-550 SHIRLEY HITSON - LOT #10 SHADY OAKS 12/16/05