(G 092 - BRIAN ZECHER Lot #22 The Oaks -- , ** - BGE1)

THIS DWG PREPARED FROM COMPUTER INPUT (LOADS & DIMENSIONS) SUBMITTED BY TRUSS MFR.

Top chord 2x4 SP #2 Dense :T5 2x6 SP #2:
Bot chord 2x4 SP #2 Dense
Webs 2x4 SP #3

110 mph wind, 15.23 ft mean hgt, ASCE 7-02, CLOSED bldg, Located anywhere in roof, CAT II, EXP B, wind TC DL=5.0 psf, wind BC DL=5.0 psf, Iw=1.00 GCpi(+/-)=0.18

Roof overhang supports 2.00 psf soffit load.

See DWGS A11030EE0207 & GBLLETIN0207 for more requirements.

(A) #3 or better scab brace. Same size & 80% length of web member. Attach with 10d Box or Gun (0.128"x3",min.)nails @ 6" OC.

Deflection meets L/240 live and L/180 total load. Creep increase factor for dead load is 1.50.

+ MEMBER TO BE LATERALLY BRACED FOR OUT OF PLANE WIND LOADS. BRACING SYSTEM TO BE DESIGNED AND FURNISHED BY OTHERS.

(**) 2 plate(s) require special positioning. Refer to scaled plate plot details for special positioning requirements.

Wind reactions based on MWFRS pressures.

Right end vertical not exposed to wind pressure.

Truss spaced at 24.0" OC designed to support 2-0-0 top chord outlookers. Cladding load shall not exceed 10.00 PSF. Top chord must not be cut or notched.

In lieu of structural panels use purlins to brace all flat TC @ 24" OC.

The building designer is responsible for the design of the roof and ceiling diaphragms, gable end shear walls, and supporting shear walls. Shear walls must provide continuous lateral restraint to the gable end. All connections to be designed by the building designer.

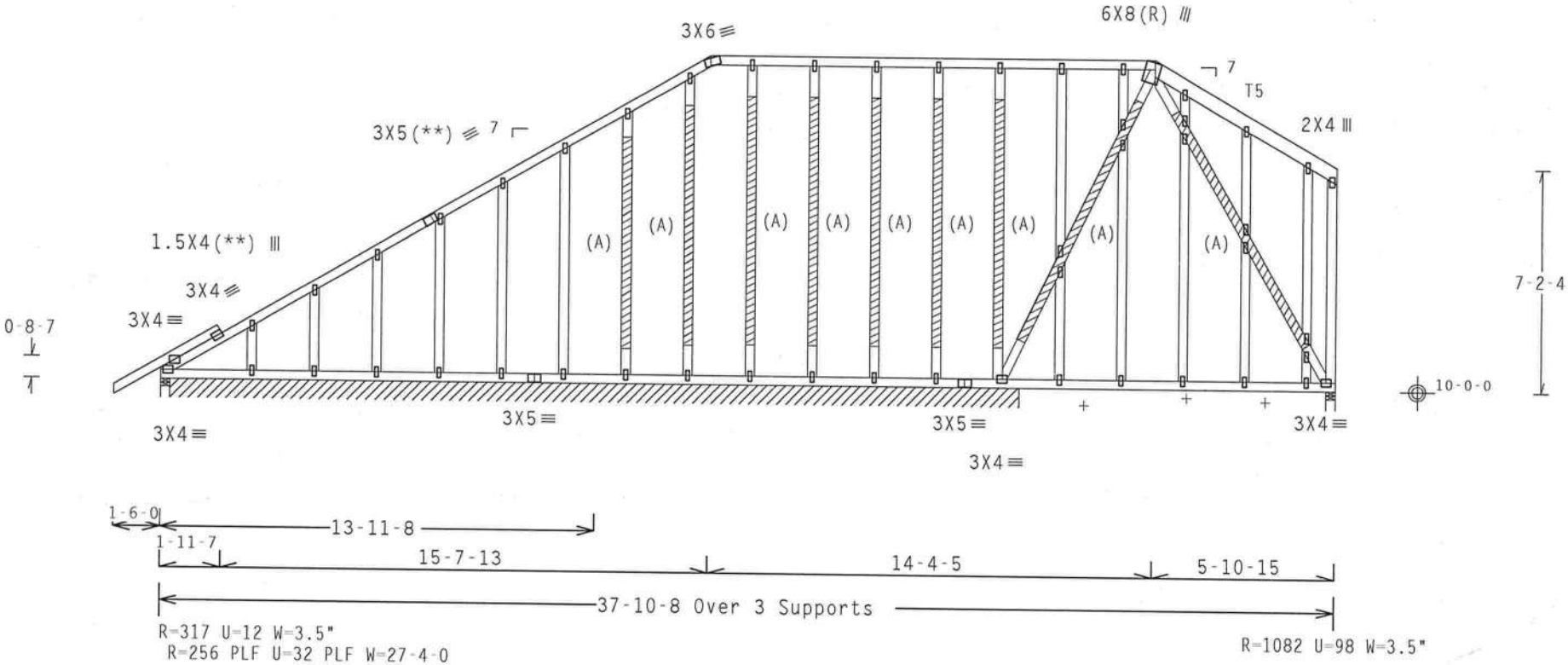

Note: All Plates Are 1.5X4 Except As Shown.

Design Crit: TPI-2002(STD)/FBC

PLT TYP. Wave

Cq/RT=1.00(1.25)/0(0) 7.36.00 S.P.I. QTY:1 FL/-/4/-/-/R/- Scale =.1875"/Ft.

ALPINE
ITW Building Components Group Inc.
Haines City, FL 33844
FL COA #0 278

WARNING TRUSSES REQUIRE EXTREME CARE IN FABRICATION, HANDLING, SHIPPING, INSTALLING AND BRACING. REFER TO BCSI (BUILDING COMPONENT SAFETY INFORMATION), PUBLISHED BY TPI (TRUSS PLATE INSTITUTE, 218 NORTH LEE STREET, SUITE 312, ALEXANDRIA, VA, 22314) AND WTCA (WOOD TRUSS COUNCIL OF AMERICA, 6300 ENTERPRISE LANE, MADISON, WI 53719) FOR SAFETY PRACTICES PRIOR TO PERFORMING THESE FUNCTIONS. UNLESS OTHERWISE INDICATED TOP CHORD SHALL HAVE PROPERLY ATTACHED STRUCTURAL PANELS AND BOTTOM CHORD SHALL HAVE A PROPERLY ATTACHED RIGID CEILING.

IMPORTANTFURNISH A COPY OF THIS DESIGN TO THE INSTALLATION CONTRACTOR. ITW BCG, INC. SHALL NOT BE RESPONSIBLE FOR ANY DEVIATION FROM THIS DESIGN; ANY FAILURE TO BUILD THE TRUSS IN COMFORMANCE WITH TPI; OR FABRICATING, HANDLING, SHIPPING, INSTALLING & BRACING OF TRUSSES.
DESIGN CONFORMS WITH APPLICABLE PROVISIONS OF NDS (NATIONAL DESIGN SPEC. BY AF&PA) AND TPI. ITW BCG CONNECTOR PLATES ARE MADE OF 20/18/16GA (W,H/SS/K) ASTM A653 GRADE 40/60 (W, K/H,SS) GALV. STEEL. APPLY PLATES TO EACH FACE OF TRUSS AND, UNLESS OTHERWISE LOCATED ON THIS DESIGN. POSITION PER DRAWINGS 160A-Z. ANY INSPECTION OF PLATES FOLLOWED BY (1) SHALL BE PER ANNEX A3 OF TPI1-2002 SEC.3. A SEAL ON THIS DRAWING INDICATES ACCEPTANCE OF PROFESSIONAL ENGINEERING RESPONSIBILITY SOLELY FOR THE TRUSS COMPONENT DESIGN SHOWN. THE SUITABILITY AND USE OF THIS COMPONENT FOR ANY BUILDING IS THE RESPONSIBILITY OF THE BUILDING DESIGNER PER ANSI/TPI 1 SEC. 2.

DOUGLAS FLEMING LICENSE No. 66648 STATE OF FLORIDA PROFESSIONAL ENGINEER

31 '08

TC LL	20.0 PSF	REF R8228- 64270
TC DL	10.0 PSF	DATE 07/31/08
BC DL	10.0 PSF	DRW HCUSR8228 08213035
BC LL	0.0 PSF	HC-ENG JB/DF
TOT.LD.	40.0 PSF	SEQN- 37864
DUR.FAC.	1.25	
SPACING	24.0"	JREF- 1TJ08228Z02

THIS DWG PREPARED FROM COMPUTER INPUT (LOADS & DIMENSIONS) SUBMITTED BY TRUSS MFR.

2x4 SP #2 Dense
Webs 2x4 SP #3

110 mph wind, 23.07 ft mean hgt, ASCE 7-02, CLOSED bldg, Located anywhere in roof, CAT II, EXP B, wind TC DL=5.0 psf, wind BC DL=2.0 psf. Iw=1.00 GCpi(+/-)=0.18

Wind reactions based on MWFRS pressures.

Refer to DWG PIGBACKA0207 or PIGBACKB0207 for piggyback details. PORTION OF TRUSS UNDER PIGGYBACK IS TO BE BRACED @ 24" OC, UNLESS OTHERWISE SPECIFIED.

SPECIAL LOADS
------(LUMBER DUR.FAC.=1.25 / PLATE DUR.FAC.=1.25)

TC - From	63 PLF	at	0.00	to	63 PLF	at	7.18
TC - From	63 PLF	at	7.18	to	63 PLF	at	14.36
BC - From	4 PLF	at	0.00	to	4 PLF	at	14.36

In lieu of rigid ceiling use purlins to brace BC @ 24" OC.

Deflection meets L/240 live and L/180 total load. Creep increase factor for dead load is 1.50.

FOR PIGGYBACK BEING USED FOR GABLE ENDS, GABLE DETAILS MUST ALSO BE APPLIED AS WELL AS PIGGYBACK DETAILS.

See DWGS A11030EC0207 & GBLLETIN0207 for more requirements.

The building designer is responsible for the design of the roof and ceiling diaphragms, gable end shear walls, and supporting shear walls. Shear walls must provide continuous lateral restraint to the gable end. All connections to be designed by the building designer.

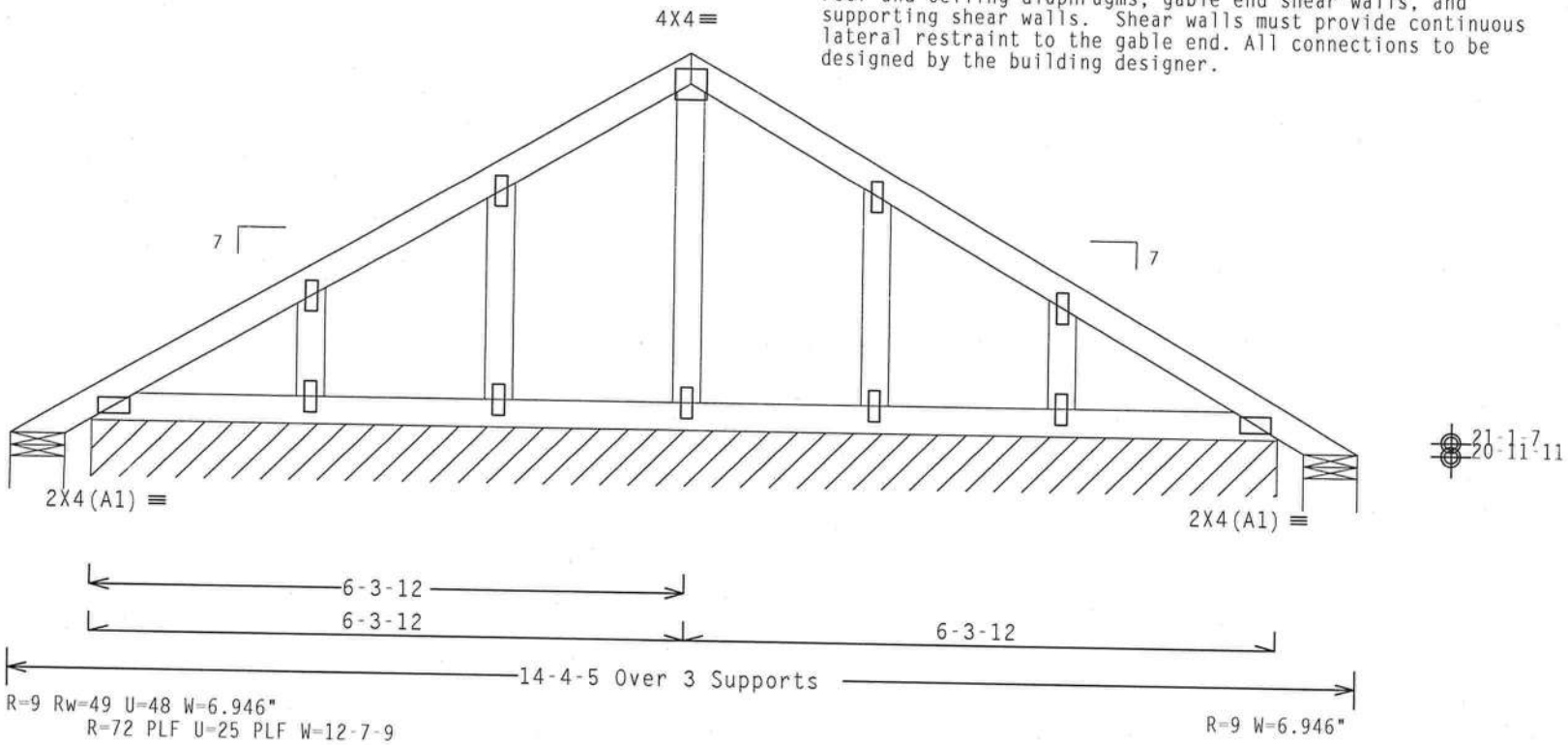

Note: All Plates Are 1.5X4 Except As Shown.

PLT TYP. Wave

Design Crit: TPI-2002(STD)/FBC
Cq/RT=1.00(1.25)/0(0) 7.36.00 QTY:3 FL/-/4/-/-/R/- Scale =.5"/Ft.

ALPINE
ITW Building Components Group Inc.
Haines City, FL 33844
FL COA #0 278

WARNING TRUSSES REQUIRE EXTREME CARE IN FABRICATION, HANDLING, SHIPPING, INSTALLING AND BRACING. REFER TO BCSI (BUILDING COMPONENT SAFETY INFORMATION), PUBLISHED BY TPI (TRUSS PLATE INSTITUTE, 218 NORTH LEE STREET, SUITE 312, ALEXANDRIA, VA, 22314) AND WTCA (WOOD TRUSS COUNCIL OF AMERICA, 6300 ENTERPRISE LANE, MADISON, WI 53719) FOR SAFETY PRACTICES PRIOR TO PERFORMING THESE FUNCTIONS. UNLESS OTHERWISE INDICATED TOP CHORD SHALL HAVE PROPERLY ATTACHED STRUCTURAL PANELS AND BOTTOM CHORD SHALL HAVE A PROPERLY ATTACHED RIGID CEILING.

IMPORTANTFURNISH A COPY OF THIS DESIGN TO THE INSTALLATION CONTRACTOR. ITW BCG, INC. SHALL NOT BE RESPONSIBLE FOR ANY DEVIATION FROM THIS DESIGN; ANY FAILURE TO BUILD THE TRUSS IN CONFORMANCE WITH TPI; OR FABRICATING, HANDLING, SHIPPING, INSTALLING & BRACING OF TRUSSES. DESIGN CONFORMS WITH APPLICABLE PROVISIONS OF NDS (NATIONAL DESIGN SPEC. BY AF&PA) AND TPI. ITW BCG CONNECTOR PLATES ARE MADE OF 20/18/16GA (W,H/SS/K) ASTM A653 GRADE 40/60 (W, K/H,SS) GALV. STEEL. APPLY PLATES TO EACH FACE OF TRUSS AND, UNLESS OTHERWISE LOCATED ON THIS DESIGN, POSITION PER DRAWINGS 160A-Z. ANY INSPECTION OF PLATES FOLLOWED BY (1) SHALL BE PER ANNEX A3 OF TPI1-2002 SEC.3. A SEAL ON THIS DRAWING INDICATES ACCEPTANCE OF PROFESSIONAL ENGINEERING RESPONSIBILITY SOLELY FOR THE TRUSS COMPONENT DESIGN SHOWN. THE SUITABILITY AND USE OF THIS COMPONENT FOR ANY BUILDING IS THE RESPONSIBILITY OF THE BUILDING DESIGNER PER ANSI/TPI 1 SEC. 2.

DOUGLAS FLEMING LICENSE No.66648 STATE OF FLORIDA PROFESSIONAL ENGINEER
31 '08

TC LL	20.0 PSF	REF R8228- 64271
TC DL	10.0 PSF	DATE 07/31/08
BC DL	10.0 PSF	DRW HCUSR8228 08213036
BC LL	0.0 PSF	HC-ENG JB/DF
TOT.LD.	40.0 PSF	SEQN- 37868
DUR.FAC.	1.25	
SPACING	24.0"	JREF- 1TJ08228702

THIS DWG PREPARED FROM COMPUTER INPUT (LOADS & DIMENSIONS) SUBMITTED BY TRUSS MFR.

Top chord 2x4 SP #2 Dense :T1 2x10 SP #2 Dense:
Bot chord 2x4 SP #2 Dense
Webs 2x4 SP #3

Calculated horizontal deflection is 0.10" due to live load and 0.17" due to dead load.

(A) 2x4 #3 or better "T" brace. 80% length of web member. Attach with 16d Box or Gun (0.135"x3.5",min.)nails @ 6" OC.

In lieu of structural panels use purlins to brace all flat TC @ 24" OC.

110 mph wind, 15.84 ft mean hgt, ASCE 7-02, CLOSED bldg, not located within 4.50 ft from roof edge, CAT II, EXP B, wind TC DL=5.0 psf, wind BC DL=5.0 psf. Iw=1.00 GCpi(+/-)=0.18

Wind reactions based on MWFRS pressures.

Right end vertical not exposed to wind pressure.

(B) 2x6 #3 or better "T" brace. 80% length of web member. Attach with 16d Box or Gun (0.135"x3.5",min.)nails @ 6" OC.

Deflection meets L/240 live and L/180 total load. Creep increase factor for dead load is 1.50.

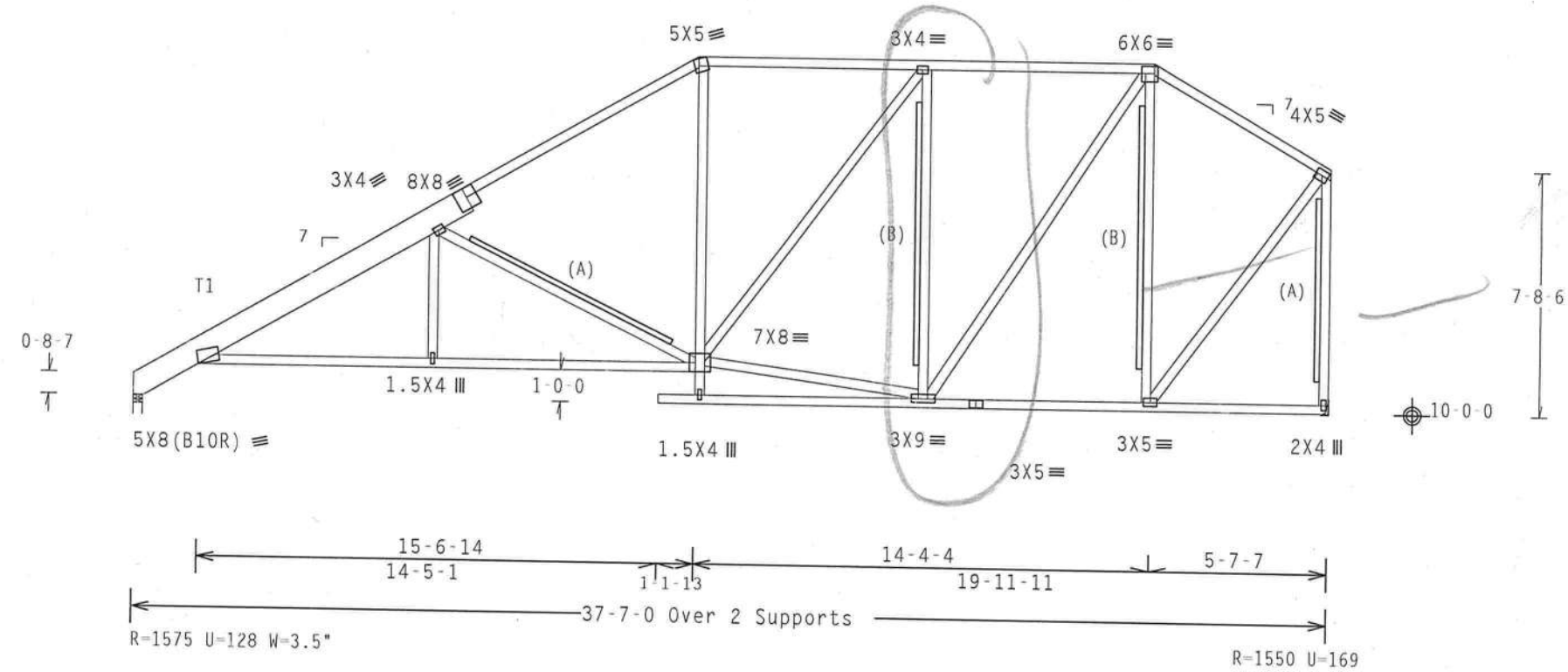

Design Crit: TPI-2002(STD)/FBC
Cq/RT=1.00(1.25)/0(0)

PLT TYP. Wave

7.36.00 [illegible] QTY:3 FL/-/4/-/-/R/- Scale =.1875"/Ft.

WARNING TRUSSES REQUIRE EXTREME CARE IN FABRICATION, HANDLING, SHIPPING, INSTALLING AND BRACING. REFER TO BCSI (BUILDING COMPONENT SAFETY INFORMATION), PUBLISHED BY TPI (TRUSS PLATE INSTITUTE, 218 NORTH LEE STREET, SUITE 312, ALEXANDRIA, VA, 22314) AND WTCA (WOOD TRUSS COUNCIL OF AMERICA, 6300 ENTERPRISE LANE, MADISON, WI 53719) FOR SAFETY PRACTICES PRIOR TO PERFORMING THESE FUNCTIONS. UNLESS OTHERWISE INDICATED TOP CHORD SHALL HAVE PROPERLY ATTACHED STRUCTURAL PANELS AND BOTTOM CHORD SHALL HAVE A PROPERLY ATTACHED RIGID CEILING.

IMPORTANT FURNISH A COPY OF THIS DESIGN TO THE INSTALLATION CONTRACTOR. ITW BCG, INC. SHALL NOT BE RESPONSIBLE FOR ANY DEVIATION FROM THIS DESIGN; ANY FAILURE TO BUILD THE TRUSS IN CONFORMANCE WITH TPI; OR FABRICATING, HANDLING, SHIPPING, INSTALLING & BRACING OF TRUSSES.
DESIGN CONFORMS WITH APPLICABLE PROVISIONS OF NDS (NATIONAL DESIGN SPEC. BY AF&PA) AND TPI. ITW BCG CONNECTOR PLATES ARE MADE OF 20/18/16GA (W,H/SS/K) ASTM A653 GRADE 40/60 (W, K/H,SS) GALV. STEEL. APPLY PLATES TO EACH FACE OF TRUSS AND, UNLESS OTHERWISE LOCATED ON THIS DESIGN, POSITION PER DRAWINGS 160A-2. ANY INSPECTION OF PLATES FOLLOWED BY (1) SHALL BE PER ANNEX A3 OF TPI1-2002 SEC.3. A SEAL ON THIS DRAWING INDICATES ACCEPTANCE OF PROFESSIONAL ENGINEERING RESPONSIBILITY SOLELY FOR THE TRUSS COMPONENT DESIGN SHOWN. THE SUITABILITY AND USE OF THIS COMPONENT FOR ANY BUILDING IS THE RESPONSIBILITY OF THE BUILDING DESIGNER PER ANSI/TPI 1 SEC. 2.

ALPINE
Building Components Group Inc.
[illegible]es City, FL 33844
[illegible] COA #0 278

DOUGLAS FLEMING LICENSE No. 66648 STATE OF FLORIDA PROFESSIONAL ENGINEER
[illegible] 31 '08

TC LL	20.0 PSF	REF	R8228- 64272
TC DL	10.0 PSF	DATE	07/31/08
BC DL	10.0 PSF	DRW	HCUSR8228 08213037
BC LL	0.0 PSF	HC-ENG	JB/DF
TOT.LD.	40.0 PSF	SEQN-	37880
DUR.FAC.	1.25		
SPACING	24.0"	JREF-	1TJ08228702

Top chord 2x4 SP #2 Dense :T1 2x10 SP #2 Dense:
Bot chord 2x4 SP #2 Dense
Webs 2x4 SP #3

Calculated horizontal deflection is 0.10" due to live load and 0.17" due to dead load.

(A) 2x4 #3 or better "T" brace. 80% length of web member. Attach with 16d Box or Gun (0.135"x3.5",min.)nails @ 6" OC.

In lieu of structural panels use purlins to brace all flat TC @ 24" OC.

110 mph wind, 15.84 ft mean hgt, ASCE 7-02, CLOSED bldg, not located within 4.50 ft from roof edge, CAT II, EXP B, wind TC DL=5.0 psf, wind BC DL=5.0 psf. Iw=1.00 GCpi(+/-)=0.18

Wind reactions based on MWFRS pressures.

Right end vertical not exposed to wind pressure.

(B) 2x6 #3 or better "T" brace. 80% length of web member. Attach with 16d Box or Gun (0.135"x3.5",min.)nails @ 6" OC.

Deflection meets L/240 live and L/180 total load. Creep increase factor for dead load is 1.50.

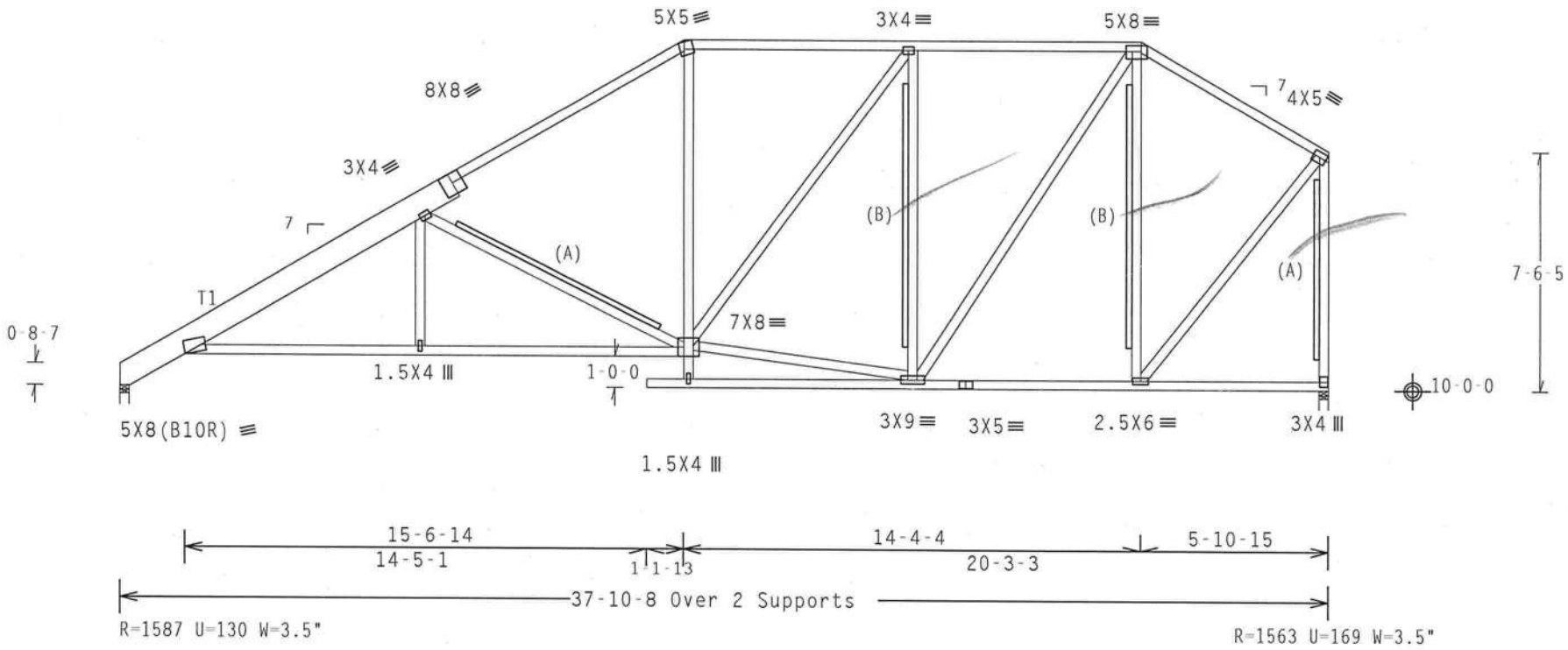

Design Crit: TPI-2002(STD)/FBC

PLT TYP. Wave | Cq/RT=1.00(1.25)/0(0) | 7.36.00 | QTY:1 | FL/-/4/-/-/R/- | Scale =.1875"/Ft.

ALPINE
ITW Building Components Group Inc.
Haines City, FL 33844
FL COA #0 278

WARNING TRUSSES REQUIRE EXTREME CARE IN FABRICATION, HANDLING, SHIPPING, INSTALLING AND BRACING. REFER TO BCSI (BUILDING COMPONENT SAFETY INFORMATION), PUBLISHED BY TPI (TRUSS PLATE INSTITUTE, 218 NORTH LEE STREET, SUITE 312, ALEXANDRIA, VA, 22314) AND WTCA (WOOD TRUSS COUNCIL OF AMERICA, 6300 ENTERPRISE LANE, MADISON, WI 53719) FOR SAFETY PRACTICES PRIOR TO PERFORMING THESE FUNCTIONS. UNLESS OTHERWISE INDICATED TOP CHORD SHALL HAVE PROPERLY ATTACHED STRUCTURAL PANELS AND BOTTOM CHORD SHALL HAVE A PROPERLY ATTACHED RIGID CEILING.

IMPORTANTFURNISH A COPY OF THIS DESIGN TO THE INSTALLATION CONTRACTOR. ITW BCG, INC. SHALL NOT BE RESPONSIBLE FOR ANY DEVIATION FROM THIS DESIGN; ANY FAILURE TO BUILD THE TRUSS IN COMFORMANCE WITH TPI; OR FABRICATING, HANDLING, SHIPPING, INSTALLING & BRACING OF TRUSSES.
DESIGN CONFORMS WITH APPLICABLE PROVISIONS OF NDS (NATIONAL DESIGN SPEC, BY AF&PA) AND TPI. ITW BCG CONNECTOR PLATES ARE MADE OF 20/18/16GA (W,H/SS/K) ASTM A653 GRADE 40/60 (W, K/H,SS) GALV. STEEL. APPLY PLATES TO EACH FACE OF TRUSS AND, UNLESS OTHERWISE LOCATED ON THIS DESIGN, POSITION PER DRAWINGS 160A-Z. ANY INSPECTION OF PLATES FOLLOWED BY (1) SHALL BE PER ANNEX A3 OF TPI1-2002 SEC.3. A SEAL ON THIS DRAWING INDICATES ACCEPTANCE OF PROFESSIONAL ENGINEERING RESPONSIBILITY SOLELY FOR THE TRUSS COMPONENT DESIGN SHOWN. THE SUITABILITY AND USE OF THIS COMPONENT FOR ANY BUILDING IS THE RESPONSIBILITY OF THE BUILDING DESIGNER PER ANSI/TPI 1 SEC. 2.

DOUGLAS FLEMING LICENSE No. 66648 STATE OF FLORIDA PROFESSIONAL ENGINEER
... 31 '08

TC LL	20.0 PSF	REF R8228- 64273
TC DL	10.0 PSF	DATE 07/31/08
BC DL	10.0 PSF	DRW HCUSR8228 08213038
BC LL	0.0 PSF	HC-ENG JB/DF
TOT.LD.	40.0 PSF	SEQN- 37891
DUR.FAC.	1.25	
SPACING	24.0"	JREF- 1TJ08228Z02

Top chord 2x4 SP #2 Dense :T1 2x10 SP #2 Dense:
Bot chord 2x4 SP #2 Dense
Webs 2x4 SP #3

Calculated horizontal deflection is 0.10" due to live load and 0.17" due to dead load.

(A) 2x4 #3 or better "T" brace. 80% length of web member. Attach with 16d Box or Gun (0.135"x3.5",min.)nails @ 6" OC.

In lieu of structural panels use purlins to brace all flat TC @ 24" OC.

110 mph wind, 15.84 ft mean hgt, ASCE 7-02, CLOSED bldg, not located within 4.50 ft from roof edge, CAT II, EXP B, wind TC DL=5.0 psf, wind BC DL=5.0 psf. Iw=1.00 GCpi(+/-)=0.18

Wind reactions based on MWFRS pressures.

Right end vertical not exposed to wind pressure.

(B) 2x6 #3 or better "T" brace. 80% length of web member. Attach with 16d Box or Gun (0.135"x3.5",min.)nails @ 6" OC.

Deflection meets L/240 live and L/180 total load. Creep increase factor for dead load is 1.50.

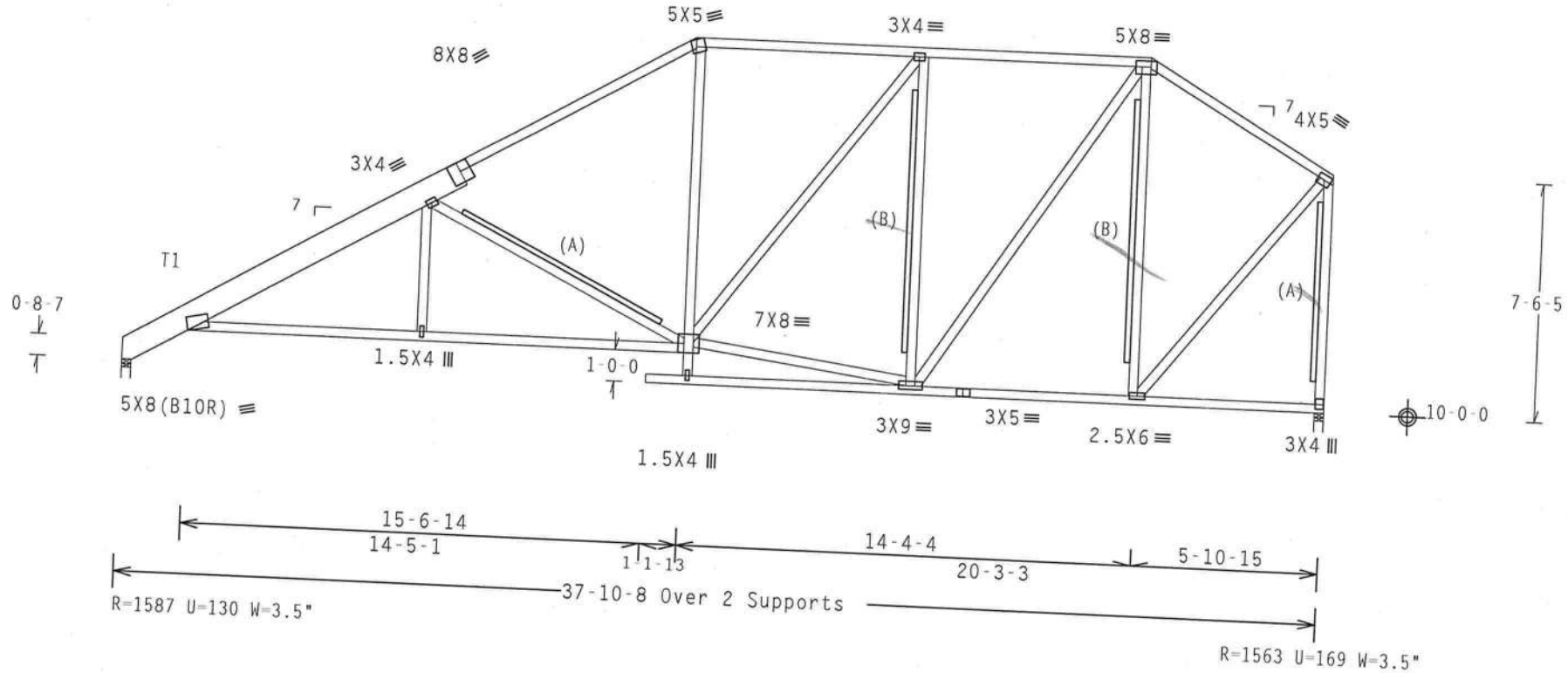

TYP. Wave

Design Crit: TPI-2002(STD)/FBC
Cq/RT=1.00(1.25)/0(0)

7.36.00 [illegible] QTY:1 FL/-/4/-/-/R/-

Scale =.1875"/Ft.

TC LL	20.0 PSF
TC DL	10.0 PSF
BC DL	10.0 PSF
BC LL	0.0 PSF
TOT.LD.	40.0 PSF
DUR.FAC.	1.25
SPACING	24.0"

REF	R8228- 64274
DATE	07/31/08
DRW	HCUSR8228 08213039
HC-ENG	JB/DF
SEQN-	37897

ALPINE
Building Components Group Inc.
Haines City, FL 33844
FL COA #0 278

WARNING TRUSSES REQUIRE EXTREME CARE IN FABRICATION, HANDLING, SHIPPING, INSTALLING AND BRACING. REFER TO BCSI (BUILDING COMPONENT SAFETY INFORMATION), PUBLISHED BY TPI (TRUSS PLATE INSTITUTE, 218 NORTH LEE STREET, SUITE 312, ALEXANDRIA, VA, 22314) AND WTCA (WOOD TRUSS COUNCIL OF AMERICA, 6300 ENTERPRISE LANE, MADISON, WI 53719) FOR SAFETY PRACTICES PRIOR TO PERFORMING THESE FUNCTIONS. UNLESS OTHERWISE INDICATED TOP CHORD SHALL HAVE PROPERLY ATTACHED STRUCTURAL PANELS AND BOTTOM CHORD SHALL HAVE A PROPERLY ATTACHED RIGID CEILING.

IMPORTANTFURNISH A COPY OF THIS DESIGN TO THE INSTALLATION CONTRACTOR. ITW BCG, INC. SHALL NOT BE RESPONSIBLE FOR ANY DEVIATION FROM THIS DESIGN; ANY FAILURE TO BUILD THE TRUSS IN CONFORMANCE WITH TPI; OR FABRICATING, HANDLING, SHIPPING, INSTALLING & BRACING OF TRUSSES. DESIGN CONFORMS WITH APPLICABLE PROVISIONS OF NDS (NATIONAL DESIGN SPEC. BY AF&PA) AND TPI. ITW BCG CONNECTOR PLATES ARE MADE OF 20/18/16GA (W.H/SS/K) ASTM A653 GRADE 40/60 (H. K/H.SS) GALV. STEEL. APPLY PLATES TO EACH FACE OF TRUSS AND, UNLESS OTHERWISE LOCATED ON THIS DESIGN, POSITION PER DRAWINGS 16DA-2. ANY INSPECTION OF PLATES FOLLOWED BY (1) SHALL BE PER ANNEX A3 OF TPI1-2002 SEC.3. A SEAL ON THIS DRAWING INDICATES ACCEPTANCE OF PROFESSIONAL ENGINEERING RESPONSIBILITY SOLELY FOR THE TRUSS COMPONENT DESIGN SHOWN. THE SUITABILITY AND USE OF THIS COMPONENT FOR ANY BUILDING IS THE RESPONSIBILITY OF THE BUILDING DESIGNER PER ANSI/TPI 1 SEC. 2.

DOUGLAS FLEMING LICENSE No. 66648 STATE OF FLORIDA PROFESSIONAL ENGINEER

[illegible] 31 '08

THIS DWG PREPARED FROM COMPUTER INPUT (LOADS & DIMENSIONS) SUBMITTED BY TRUSS MFR.

Top chord 2x4 SP #2 Dense :T1 2x10 SP #2 Dense:
Bot chord 2x4 SP #2 Dense
Webs 2x4 SP #3

Calculated horizontal deflection is 0.10" due to live load and 0.17" due to dead load.

(A) 2x4 #3 or better "T" brace. 80% length of web member. Attach with 16d Box or Gun (0.135"x3.5",min.)nails @ 6" OC.

In lieu of structural panels use purlins to brace all flat TC @ 24" OC.

110 mph wind, 15.84 ft mean hgt, ASCE 7-02, CLOSED bldg, not located within 4.50 ft from roof edge, CAT II, EXP B, wind TC DL=5.0 psf, wind BC DL=5.0 psf. Iw=1.00 GCpi(+/-)=0.18

Wind reactions based on MWFRS pressures.

Right end vertical not exposed to wind pressure.

(B) 2x6 #3 or better "T" brace. 80% length of web member. Attach with 16d Box or Gun (0.135"x3.5",min.)nails @ 6" OC.

Deflection meets L/240 live and L/180 total load. Creep increase factor for dead load is 1.50.

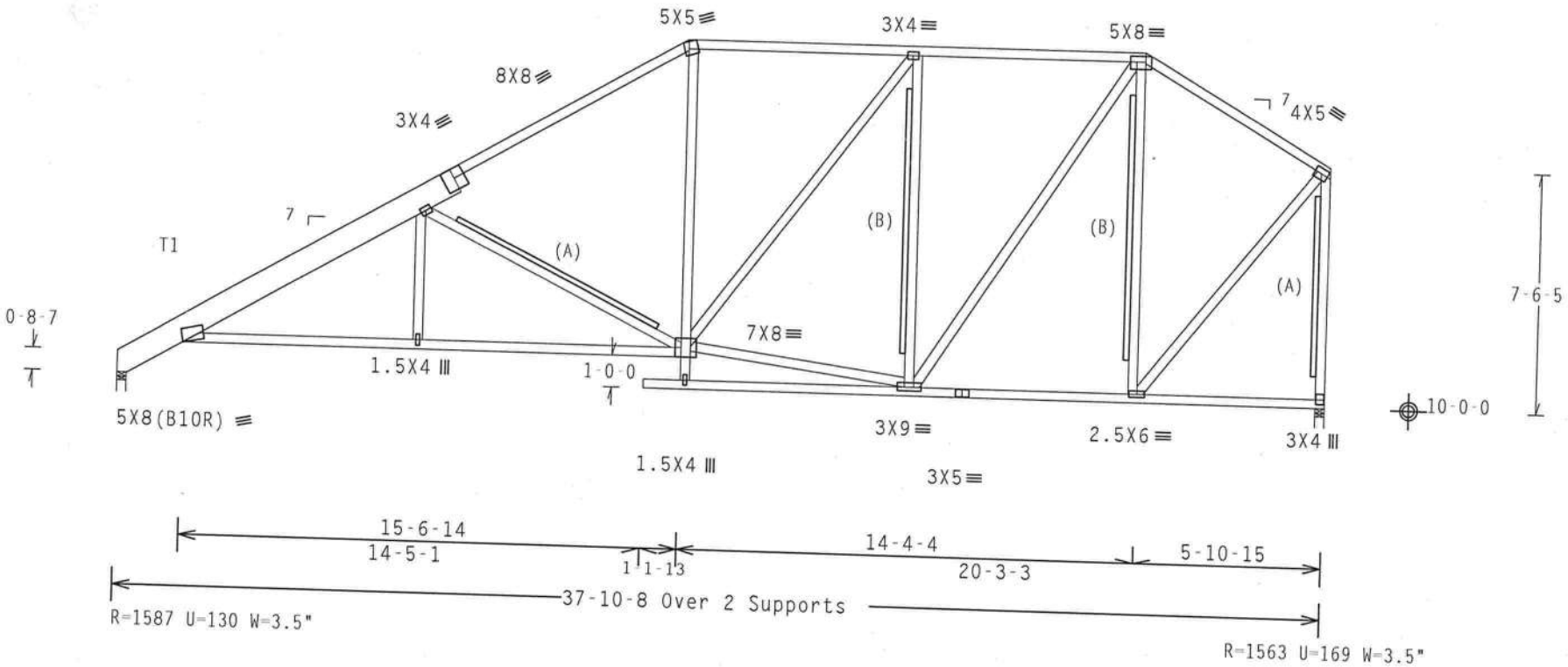

T TYP. Wave

Design Crit: TPI-2002(STD)/FBC
Cq/RT=1.00(1.25)/0(0)

7.36.00 ... QTY:1 FL/-/4/-/-/R/- Scale =.1875"/Ft.

ALPINE
Building Components Group Inc.
Haines City, FL 33844
FL COA #0 278

WARNING TRUSSES REQUIRE EXTREME CARE IN FABRICATION, HANDLING, SHIPPING, INSTALLING AND BRACING. REFER TO BCSI (BUILDING COMPONENT SAFETY INFORMATION), PUBLISHED BY TPI (TRUSS PLATE INSTITUTE, 218 NORTH LEE STREET, SUITE 312, ALEXANDRIA, VA, 22314) AND WTCA (WOOD TRUSS COUNCIL OF AMERICA, 6300 ENTERPRISE LANE, MADISON, WI 53719) FOR SAFETY PRACTICES PRIOR TO PERFORMING THESE FUNCTIONS. UNLESS OTHERWISE INDICATED TOP CHORD SHALL HAVE PROPERLY ATTACHED STRUCTURAL PANELS AND BOTTOM CHORD SHALL HAVE A PROPERLY ATTACHED RIGID CEILING.

IMPORTANTFURNISH A COPY OF THIS DESIGN TO THE INSTALLATION CONTRACTOR. ITW-BCG, INC. SHALL NOT BE RESPONSIBLE FOR ANY DEVIATION FROM THIS DESIGN; ANY FAILURE TO BUILD THE TRUSS IN COMFORMANCE WITH TPI; OR FABRICATING, HANDLING, SHIPPING, INSTALLING & BRACING OF TRUSSES. ITW BCG DESIGN CONFORMS WITH APPLICABLE PROVISIONS OF NDS (NATIONAL DESIGN SPEC. BY AF&PA) AND TPI. CONNECTOR PLATES ARE MADE OF 20/18/16GA (W,H/SS/K) ASTM A653 GRADE 40/60 (W, K/H,SS) GALV. STEEL. APPLY PLATES TO EACH FACE OF TRUSS AND, UNLESS OTHERWISE LOCATED ON THIS DESIGN, POSITION PER DRAWINGS 160A-Z. ANY INSPECTION OF PLATES FOLLOWED BY (1) SHALL BE PER ANNEX A3 OF TPI1-2002 SEC.3. A SEAL ON THIS DRAWING INDICATES ACCEPTANCE OF PROFESSIONAL ENGINEERING RESPONSIBILITY SOLELY FOR THE TRUSS COMPONENT DESIGN SHOWN. THE SUITABILITY AND USE OF THIS COMPONENT FOR ANY BUILDING IS THE RESPONSIBILITY OF THE BUILDING DESIGNER PER ANSI/TPI 1 SEC. 2.

DOUGLAS FLEMING LICENSE No. 66648 STATE OF FLORIDA PROFESSIONAL ENGINEER
... 31 '08

TC LL	20.0 PSF	REF R8228- 64275
TC DL	10.0 PSF	DATE 07/31/08
BC DL	10.0 PSF	DRW HCUSR8228 08213040
BC LL	0.0 PSF	HC-ENG JB/DF
TOT.LD.	40.0 PSF	SEQN- 37904
DUR.FAC.	1.25	
SPACING	24.0"	IREF ...

Top chord 2x4 SP #2 Dense
Bot chord 2x4 SP #2 Dense
Webs 2x4 SP #3

110 mph wind, 20.25 ft mean hgt, ASCE 7-02, CLOSED bldg, Located anywhere in roof, CAT II, EXP B, wind TC DL=5.0 psf, wind BC DL=1.2 psf. Iw=1.00 GCpi(+/-)=0.18

Wind reactions based on MWFRS pressures.

Deflection meets L/240 live and L/180 total load. Creep increase factor for dead load is 1.50.

Refer to DWG PIGBACKA0207 or PIGBACKB0207 for piggyback details. PORTION OF TRUSS UNDER PIGGYBACK IS TO BE BRACED @ 24" OC, UNLESS OTHERWISE SPECIFIED.

SPECIAL LOADS
------(LUMBER DUR.FAC.=1.25 / PLATE DUR.FAC.=1.25)

TC - From	63 PLF	at 0.00	to	63 PLF	at 11.34
TC - From	63 PLF	at 11.34	to	63 PLF	at 11.71
BC - From	4 PLF	at 0.00	to	4 PLF	at 11.71

Right end vertical not exposed to wind pressure.

In lieu of rigid ceiling use purlins to brace BC @ 24" OC.

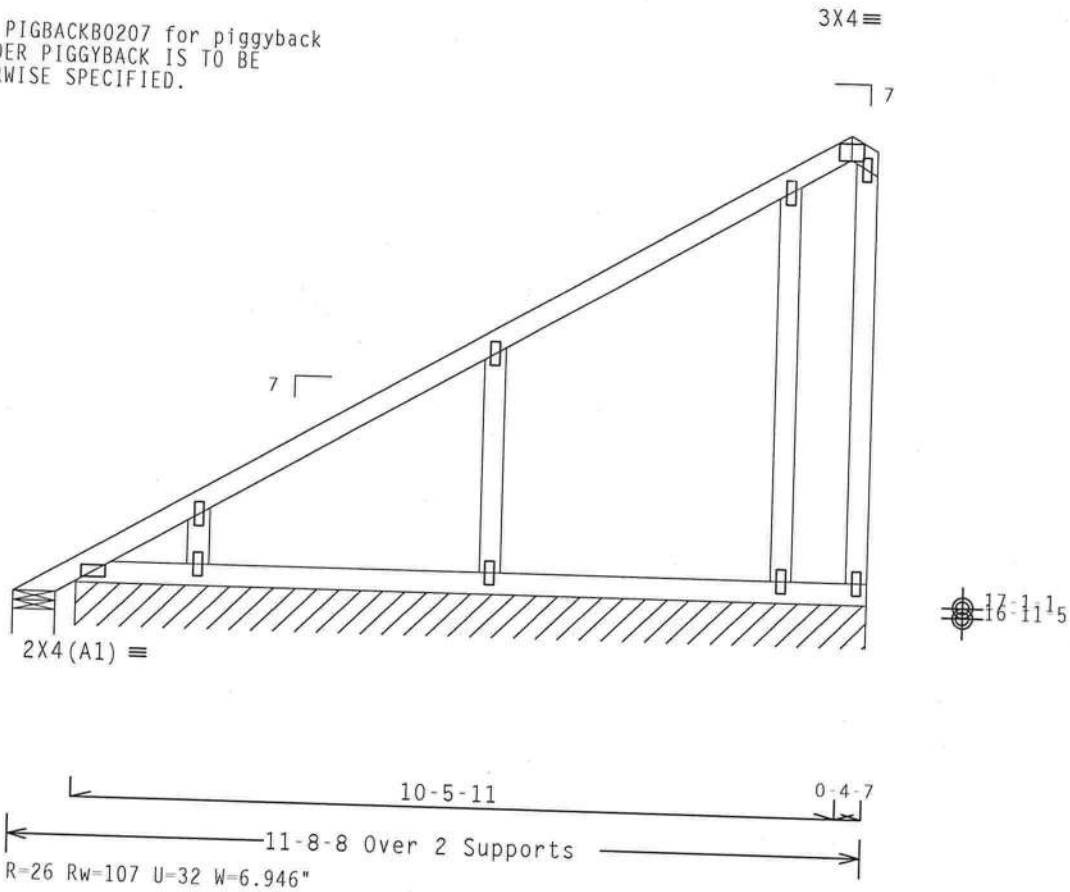

te: All Plates Are 1.5X4 Except As Shown.

T TYP. Wave

Design Crit: TPI-2002(STD)/FBC
Cq/RT=1.00(1.25)/0(0)

7.37.0

QTY:1 FL/-/4/-/-/R/-

Scale =.375"/Ft.

ALPINE
Building Components Group Inc.
Haines City, FL 33844
FL COA #0 278

WARNING TRUSSES REQUIRE EXTREME CARE IN FABRICATION, HANDLING, SHIPPING, INSTALLING AND BRACING. REFER TO BCSI (BUILDING COMPONENT SAFETY INFORMATION), PUBLISHED BY TPI (TRUSS PLATE INSTITUTE, 218 NORTH LEE STREET, SUITE 312, ALEXANDRIA, VA. 22314) AND WTCA (WOOD TRUSS COUNCIL OF AMERICA, 6300 ENTERPRISE LANE, MADISON, WI 53719) FOR SAFETY PRACTICES PRIOR TO PERFORMING THESE FUNCTIONS. UNLESS OTHERWISE INDICATED TOP CHORD SHALL HAVE PROPERLY ATTACHED STRUCTURAL PANELS AND BOTTOM CHORD SHALL HAVE A PROPERLY ATTACHED RIGID CEILING.

IMPORTANT FURNISH A COPY OF THIS DESIGN TO THE INSTALLATION CONTRACTOR. ITW BCG, INC. SHALL NOT BE RESPONSIBLE FOR ANY DEVIATION FROM THIS DESIGN; ANY FAILURE TO BUILD THE TRUSS IN CONFORMANCE WITH TPI; OR FABRICATING, HANDLING, SHIPPING, INSTALLING & BRACING OF TRUSSES. DESIGN CONFORMS WITH APPLICABLE PROVISIONS OF NDS (NATIONAL DESIGN SPEC. BY AF&PA) AND TPI. ITW BCG CONNECTOR PLATES ARE MADE OF 20/18/16GA (W.H/SS/K) ASTM A653 GRADE 40/60 (W. K/H.SS) GALV. STEEL. APPLY PLATES TO EACH FACE OF TRUSS AND, UNLESS OTHERWISE LOCATED ON THIS DESIGN, POSITION PER DRAWINGS 160A-Z. ANY INSPECTION OF PLATES FOLLOWED BY (1) SHALL BE PER ANNEX A3 OF TPI1-2002 SEC.3. A SEAL ON THIS DRAWING INDICATES ACCEPTANCE OF PROFESSIONAL ENGINEERING RESPONSIBILITY SOLELY FOR THE TRUSS COMPONENT DESIGN SHOWN. THE SUITABILITY AND USE OF THIS COMPONENT FOR ANY BUILDING IS THE RESPONSIBILITY OF THE BUILDING DESIGNER PER ANSI/TPI 1 SEC. 2.

DOUGLAS FLEMING LICENSE No. 66648 STATE OF FLORIDA PROFESSIONAL ENGINEER

ul 31 '08

TC LL	20.0 PSF	REF	R8228- 64276
TC DL	10.0 PSF	DATE	07/31/08
BC DL	10.0 PSF	DRW	HCUSR8228 08213041
BC LL	0.0 PSF	HC-ENG	JB/DF
TOT.LD.	40.0 PSF	SEQN-	12217 REV
DUR.FAC.	1.25		
SPACING	24.0"	JREF-	

Top chord 2x4 SP #2 Dense
Bot chord 2x4 SP #2 Dense
Webs 2x4 SP #3

110 mph wind, 19.67 ft mean hgt, ASCE 7-02, CLOSED bldg, not located within 4.50 ft from roof edge, CAT II, EXP B, wind TC DL=5.0 psf, wind BC DL=2.0 psf. Iw=1.00 GCpi(+/-)=0.18

Wind reactions based on MWFRS pressures.

Deflection meets L/240 live and L/180 total load. Creep increase factor for dead load is 1.50.

Refer to DWG PIGBACKA0207 or PIGBACKB0207 for piggyback details. PORTION OF TRUSS UNDER PIGGYBACK IS TO BE BRACED @ 24" OC, UNLESS OTHERWISE SPECIFIED.

SPECIAL LOADS
------(LUMBER DUR.FAC.=1.25 / PLATE DUR.FAC.=1.25)

TC - From	63 PLF at	0.00 to	63 PLF at	13.34
TC - From	63 PLF at	13.34 to	63 PLF at	13.71
BC - From	4 PLF at	0.00 to	4 PLF at	13.71

Right end vertical not exposed to wind pressure.

In lieu of rigid ceiling use purlins to brace BC @ 24" OC.

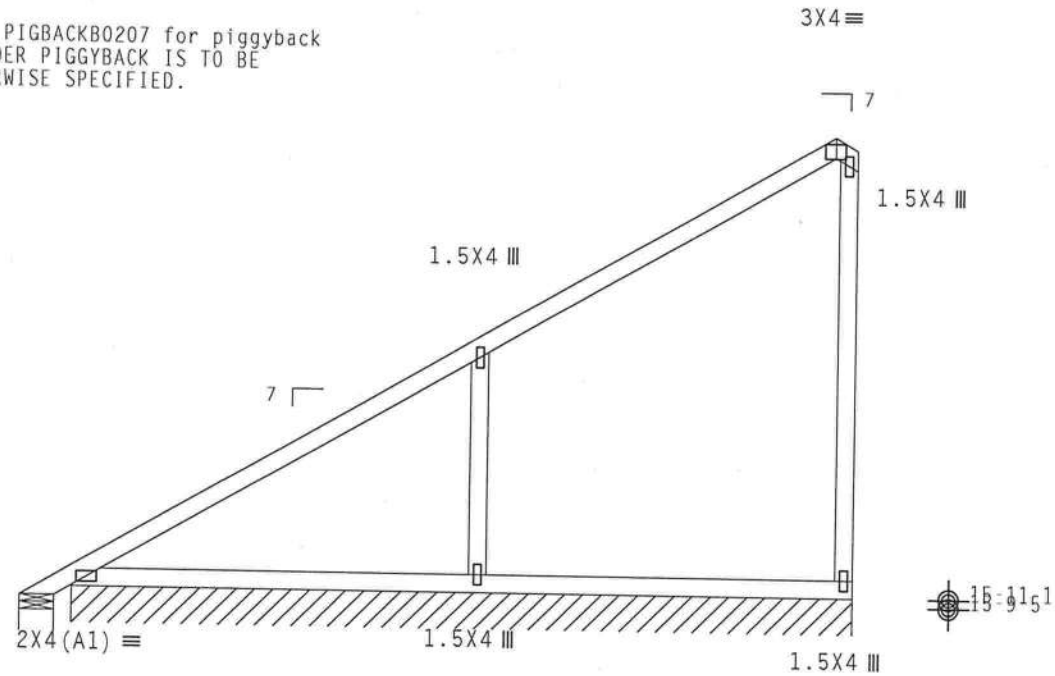

R=-170 Rw=224 U=129 W=6.946"
R=83 PLF U=37 PLF W=12-10-2

LT TYP. Wave

Design Crit: TPI-2002(STD)/FBC
Cq/RT=1.00(1.25)/0(0) 7.36.00 (12/12/1

QTY:1 FL/-/4/-/-/R/- Scale =.3125"/Ft.

ALPINE
ITW Building Components Group Inc.
Haines City, FL 33844
FL COA #0 278

WARNING TRUSSES REQUIRE EXTREME CARE IN FABRICATION, HANDLING, SHIPPING, INSTALLING AND BRACING. REFER TO BCSI (BUILDING COMPONENT SAFETY INFORMATION), PUBLISHED BY TPI (TRUSS PLATE INSTITUTE, 218 NORTH LEE STREET, SUITE 312, ALEXANDRIA, VA, 22314) AND WTCA (WOOD TRUSS COUNCIL OF AMERICA, 6300 ENTERPRISE LANE, MADISON, WI 53719) FOR SAFETY PRACTICES PRIOR TO PERFORMING THESE FUNCTIONS. UNLESS OTHERWISE INDICATED TOP CHORD SHALL HAVE PROPERLY ATTACHED STRUCTURAL PANELS AND BOTTOM CHORD SHALL HAVE A PROPERLY ATTACHED RIGID CEILING.

IMPORTANTFURNISH A COPY OF THIS DESIGN TO THE INSTALLATION CONTRACTOR. ITW BCG, INC. SHALL NOT BE RESPONSIBLE FOR ANY DEVIATION FROM THIS DESIGN; ANY FAILURE TO BUILD THE TRUSS IN COMFORMANCE WITH TPI; OR FABRICATING, HANDLING, SHIPPING, INSTALLING & BRACING OF TRUSSES.
DESIGN CONFORMS WITH APPLICABLE PROVISIONS OF NDS (NATIONAL DESIGN SPEC. BY AF&PA) AND TPI. ITW BCG CONNECTOR PLATES ARE MADE OF 20/18/16GA (W.H/SS/K) ASTM A653 GRADE 40/60 (W. K/H.SS) GALV. STEEL. APPLY PLATES TO EACH FACE OF TRUSS AND. UNLESS OTHERWISE LOCATED ON THIS DESIGN. POSITION PER DRAWINGS 160A-Z. ANY INSPECTION OF PLATES FOLLOWED BY (1) SHALL BE PER ANNEX A3 OF TPI1-2002 SEC.3. A SEAL ON THIS DRAWING INDICATES ACCEPTANCE OF PROFESSIONAL ENGINEERING RESPONSIBILITY SOLELY FOR THE TRUSS COMPONENT DESIGN SHOWN. THE SUITABILITY AND USE OF THIS COMPONENT FOR ANY BUILDING IS THE RESPONSIBILITY OF THE BUILDING DESIGNER PER ANSI/TPI 1 SEC. 2.

DOUGLAS J. FLEMING LICENSE No. 66648 STATE OF FLORIDA PROFESSIONAL ENGINEER

31 '08

TC LL	20.0 PSF	REF R8228- 64277
TC DL	10.0 PSF	DATE 07/31/08
BC DL	10.0 PSF	DRW HCUSR8228 08213042
BC LL	0.0 PSF	HC-ENG JB/DF
TOT.LD.	40.0 PSF	SEQN- 37912
DUR.FAC.	1.25	
SPACING	24.0"	JREF- 1TJ08228702

Top chord 2x4 SP #2 Dense
Bot chord 2x4 SP #2 Dense
Webs 2x4 SP #3

110 mph wind, 19.48 ft mean hgt, ASCE 7-02, CLOSED bldg, Located anywhere in roof, CAT II, EXP B, wind TC DL=5.0 psf, wind BC DL=2.0 psf. Iw=1.00 GCpi(+/-)=0.18

Wind reactions based on MWFRS pressures.

Deflection meets L/240 live and L/180 total load. Creep increase factor for dead load is 1.50.

SPECIAL LOADS
------(LUMBER DUR.FAC.=1.25 / PLATE DUR.FAC.=1.25)

TC - From	63 PLF at	0.00 to	63 PLF at	13.99
TC - From	63 PLF at	13.99 to	63 PLF at	14.35
BC - From	4 PLF at	0.00 to	4 PLF at	14.35

Right end vertical not exposed to wind pressure.

In lieu of rigid ceiling use purlins to brace BC @ 24" OC.

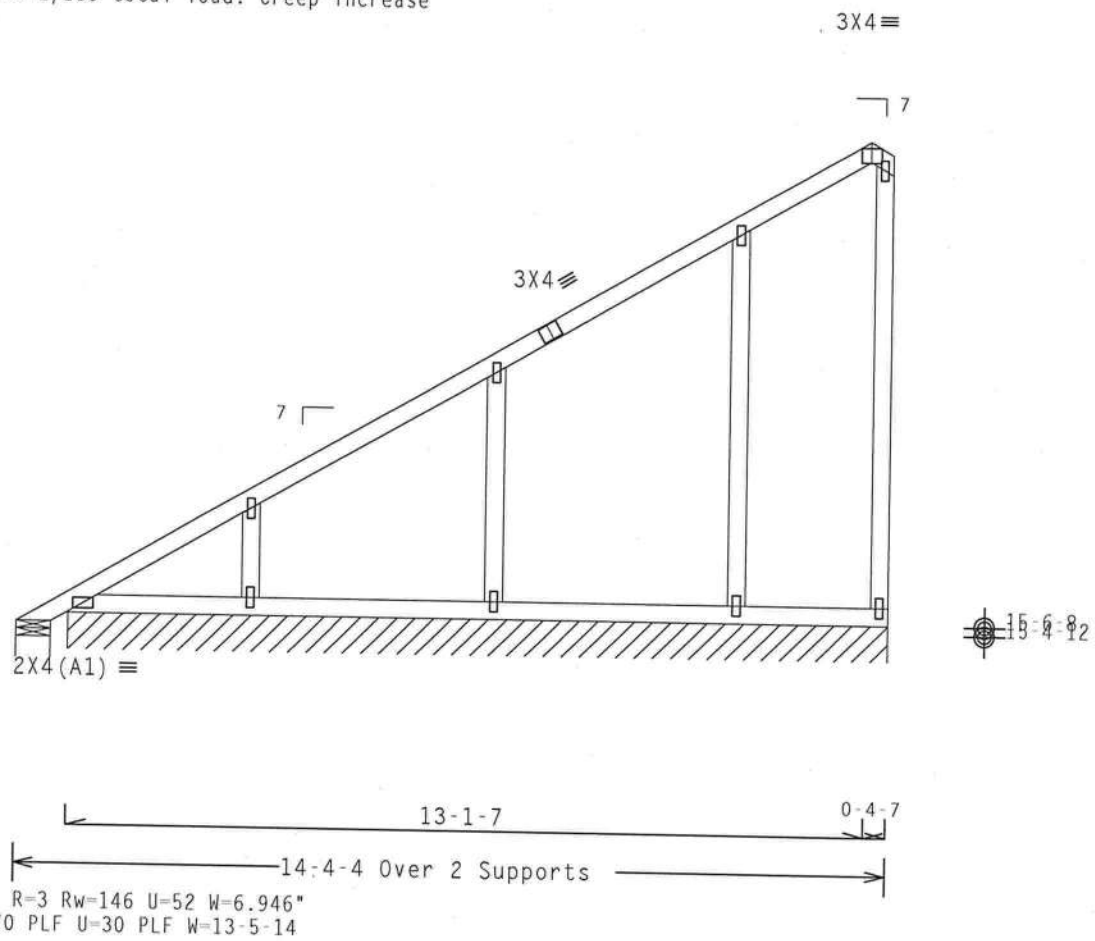

lote: All Plates Are 1.5X4 Except As Shown.

LT TYP. Wave

Design Crit: TPI-2002(STD)/FBC
Cq/RT=1.00(1.25)/0(0) 7.37.00.0[illegible] QTY:1 FL/-/4/-/-/R/- Scale =.3125"/Ft.

WARNING TRUSSES REQUIRE EXTREME CARE IN FABRICATION, HANDLING, SHIPPING, INSTALLING AND BRACING. REFER TO BCSI (BUILDING COMPONENT SAFETY INFORMATION), PUBLISHED BY TPI (TRUSS PLATE INSTITUTE, 218 NORTH LEE STREET, SUITE 312, ALEXANDRIA, VA, 22314) AND WTCA (WOOD TRUSS COUNCIL OF AMERICA, 6300 ENTERPRISE LANE, MADISON, WI 53719) FOR SAFETY PRACTICES PRIOR TO PERFORMING THESE FUNCTIONS. UNLESS OTHERWISE INDICATED TOP CHORD SHALL HAVE PROPERLY ATTACHED STRUCTURAL PANELS AND BOTTOM CHORD SHALL HAVE A PROPERLY ATTACHED RIGID CEILING.

IMPORTANTFURNISH A COPY OF THIS DESIGN TO THE INSTALLATION CONTRACTOR. ITW BCG, INC. SHALL NOT BE RESPONSIBLE FOR ANY DEVIATION FROM THIS DESIGN; ANY FAILURE TO BUILD THE TRUSS IN CONFORMANCE WITH TPI; OR FABRICATING, HANDLING, SHIPPING, INSTALLING & BRACING OF TRUSSES.
DESIGN CONFORMS WITH APPLICABLE PROVISIONS OF NDS (NATIONAL DESIGN SPEC. BY AF&PA) AND TPI. ITW BCG CONNECTOR PLATES ARE MADE OF 20/18/16GA (W.H/SS/K) ASTM A653 GRADE 40/60 (W, K/H.SS) GALV. STEEL. APPLY PLATES TO EACH FACE OF TRUSS AND, UNLESS OTHERWISE LOCATED ON THIS DESIGN, POSITION PER DRAWINGS 160A-Z. ANY INSPECTION OF PLATES FOLLOWED BY (1) SHALL BE PER ANNEX A3 OF TPI1-2002 SEC.3. A SEAL ON THIS DRAWING INDICATES ACCEPTANCE OF PROFESSIONAL ENGINEERING RESPONSIBILITY SOLELY FOR THE TRUSS COMPONENT DESIGN SHOWN. THE SUITABILITY AND USE OF THIS COMPONENT FOR ANY BUILDING IS THE RESPONSIBILITY OF THE BUILDING DESIGNER PER ANSI/TPI 1 SEC. 2.

ALPINE
Components Group Inc.
City, FL 33844
COA #0 278

DOUGLAS FLEMING
LICENSE
No. 66648
STATE OF
FLORIDA
PROFESSIONAL ENGINEER
[illegible] 31 '08

TC LL	20.0 PSF	REF R8228- 64278
TC DL	10.0 PSF	DATE 07/31/08
BC DL	10.0 PSF	DRW HCUSR8228 08213043
BC LL	0.0 PSF	HC-ENG JB/DF
TOT.LD.	40.0 PSF	SEQN- 12222 REV
DUR.FAC.	1.25	
SPACING	24.0"	JREF- 1TJ08228Z02

(8-092--BRYAN ZECHER Lot #22 The Oaks -- , ** - AP4)

THIS DWG PREPARED FROM COMPUTER INPUT (LOADS & DIMENSIONS) SUBMITTED BY TRUSS MFR.

Top chord 2x4 SP #2 Dense
Bot chord 2x4 SP #2 Dense
Webs 2x4 SP #3

110 mph wind, 19.48 ft mean hgt, ASCE 7-02, CLOSED bldg, Located anywhere in roof, CAT II, EXP B, wind TC DL=5.0 psf, wind BC DL=1.2 psf. Iw=1.00 GCpi(+/-)=0.18

Wind reactions based on MWFRS pressures.

Deflection meets L/240 live and L/180 total load. Creep increase factor for dead load is 1.50.

Refer to DWG PIGBACKA0207 or PIGBACKB0207 for piggyback details. PORTION OF TRUSS UNDER PIGGYBACK IS TO BE BRACED @ 24" OC, UNLESS OTHERWISE SPECIFIED.

SPECIAL LOADS
------(LUMBER DUR.FAC.=1.25 / PLATE DUR.FAC.=1.25)

TC - From	63 PLF at	0.00 to	63 PLF at	13.99
TC - From	63 PLF at	13.99 to	63 PLF at	14.35
BC - From	4 PLF at	0.00 to	4 PLF at	14.35

Right end vertical not exposed to wind pressure.

In lieu of rigid ceiling use purlins to brace BC @ 24" OC.

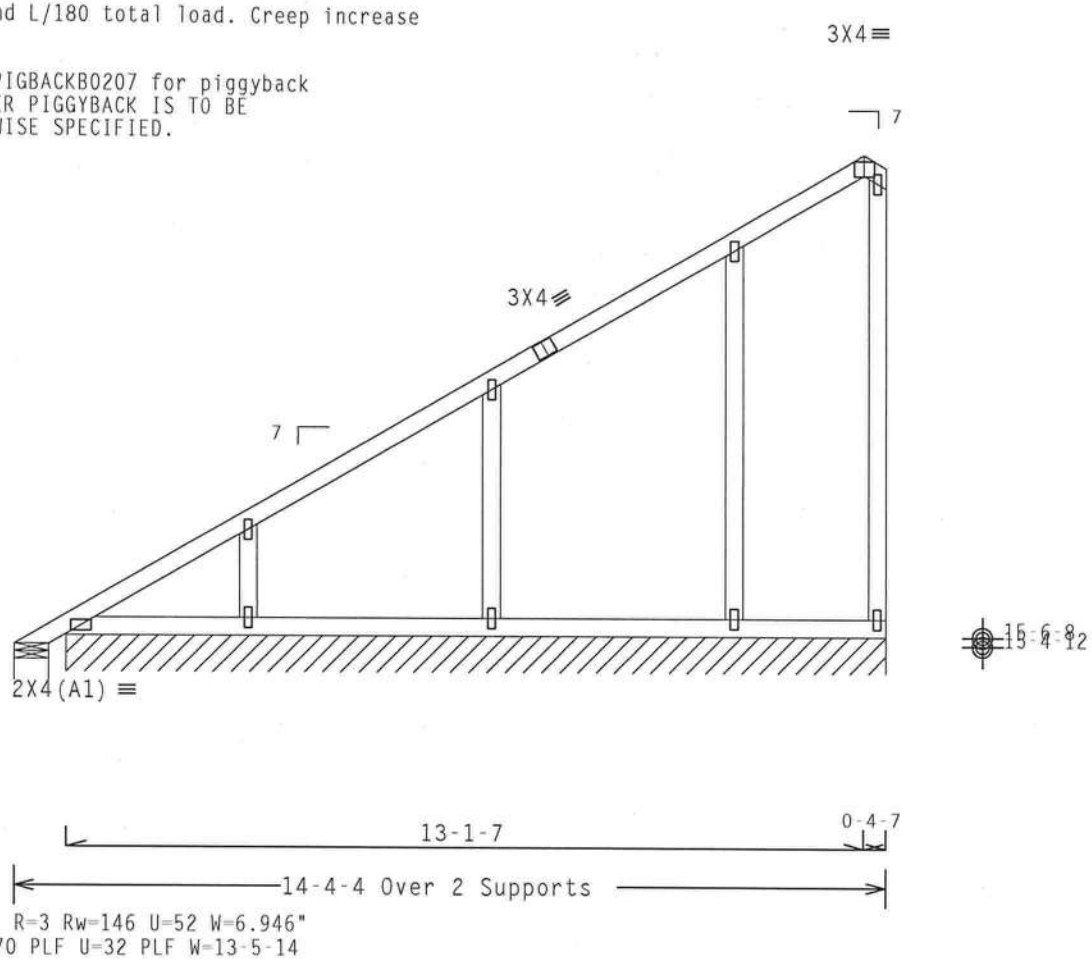

Note: All Plates Are 1.5X4 Except As Shown.

Design Crit: TPI-2002(STD)/FBC

PLT TYP. Wave Cq/RT=1.00(1.25)/0(0) 7.37.00 [illegible] QTY:1 FL/-/4/-/-/R/- Scale =.3125"/Ft.

ALPINE
ITW Building Components Group Inc.
Haines City, FL 33844
FL COA #0 278

WARNING TRUSSES REQUIRE EXTREME CARE IN FABRICATION, HANDLING, SHIPPING, INSTALLING AND BRACING. REFER TO BCSI (BUILDING COMPONENT SAFETY INFORMATION), PUBLISHED BY TPI (TRUSS PLATE INSTITUTE, 218 NORTH LEE STREET, SUITE 312, ALEXANDRIA, VA, 22314) AND WTCA (WOOD TRUSS COUNCIL OF AMERICA, 6300 ENTERPRISE LANE, MADISON, WI 53719) FOR SAFETY PRACTICES PRIOR TO PERFORMING THESE FUNCTIONS. UNLESS OTHERWISE INDICATED TOP CHORD SHALL HAVE PROPERLY ATTACHED STRUCTURAL PANELS AND BOTTOM CHORD SHALL HAVE A PROPERLY ATTACHED RIGID CEILING.

IMPORTANTFURNISH A COPY OF THIS DESIGN TO THE INSTALLATION CONTRACTOR. ITW BCG, INC. SHALL NOT BE RESPONSIBLE FOR ANY DEVIATION FROM THIS DESIGN; ANY FAILURE TO BUILD THE TRUSS IN CONFORMANCE WITH TPI; OR FABRICATING, HANDLING, SHIPPING, INSTALLING & BRACING OF TRUSSES. DESIGN CONFORMS WITH APPLICABLE PROVISIONS OF NDS (NATIONAL DESIGN SPEC. BY AF&PA) AND TPI. ITW BCG CONNECTOR PLATES ARE MADE OF 20/18/16GA (W,H/SS/K) ASTM A653 GRADE 40/60 (W, K/H,SS) GALV. STEEL. APPLY PLATES TO EACH FACE OF TRUSS AND, UNLESS OTHERWISE LOCATED ON THIS DESIGN, POSITION PER DRAWINGS 160A-Z. ANY INSPECTION OF PLATES FOLLOWED BY (1) SHALL BE PER ANNEX A3 OF TPI1-2002 SEC.3. A SEAL ON THIS DRAWING INDICATES ACCEPTANCE OF PROFESSIONAL ENGINEERING RESPONSIBILITY SOLELY FOR THE TRUSS COMPONENT DESIGN SHOWN. THE SUITABILITY AND USE OF THIS COMPONENT FOR ANY BUILDING IS THE RESPONSIBILITY OF THE BUILDING DESIGNER PER ANSI/TPI 1 SEC. 2.

DOUGLAS FLEMING LICENSE No. 66648 STATE OF FLORIDA PROFESSIONAL ENGINEER
[illegible] 31 '08

TC LL	20.0 PSF	REF R8228- 64279
TC DL	10.0 PSF	DATE 07/31/08
BC DL	10.0 PSF	DRW HCUSR8228 08213044
BC LL	0.0 PSF	HC-ENG JB/DF
TOT.LD.	40.0 PSF	SEQN- 12228 REV
DUR.FAC.	1.25	
SPACING	24.0"	JREF- 1TJ08228Z02

(6-092--BRYAN ZECHER Lot #22 The Oaks -- , ** - EGE)

THIS DWG PREPARED FROM COMPUTER INPUT (LOADS & DIMENSIONS) SUBMITTED BY TRUSS MFR.

Top chord 2x4 SP #2 Dense :T6 2x6 SP #2:
Bot chord 2x4 SP #2 Dense :B3 2x6 SP #2:
Webs 2x4 SP #3 :W10 2x4 SP #2 Dense:

110 mph wind, 15.00 ft mean hgt, ASCE 7-02, CLOSED bldg. Located anywhere in roof, CAT II, EXP B, wind TC DL=5.0 psf, wind BC DL=5.0 psf. Iw=1.00 GCpi(+/-)=0.18

Wind reactions based on MWFRS pressures.

Roof overhang supports 2.00 psf soffit load.

Truss spaced at 24.0" OC designed to support 2-0-0 top chord outlookers. Cladding load shall not exceed 10.00 PSF. Top chord must not be cut or notched.

(A) #3 or better scab brace. Same size & 80% length of web member. Attach with 10d Box or Gun (0.128"x3",min.)nails @ 6" OC.

Deflection meets L/240 live and L/180 total load. Creep increase factor for dead load is 1.50.

+ MEMBER TO BE LATERALLY BRACED FOR OUT OF PLANE WIND LOADS. BRACING SYSTEM TO BE DESIGNED AND FURNISHED BY OTHERS.

SPECIAL LOADS
------(LUMBER DUR.FAC.=1.25 / PLATE DUR.FAC.=1.25)
TC - From 63 PLF at -1.50 to 63 PLF at 15.92
TC - From 63 PLF at 15.92 to 63 PLF at 32.76
TC - From 63 PLF at 32.76 to 63 PLF at 37.71
BC - From 5 PLF at -1.50 to 5 PLF at 0.00
BC - From 20 PLF at 0.00 to 20 PLF at 24.71
BC - From 20 PLF at 24.71 to 20 PLF at 37.71
PLT- 307 LB Conc. Load at (25.65,18.27), (27.65,18.27), (29.65,18.27) (31.65,18.27), (33.65,17.74)
PLT- 1422 LB Conc. Load at (35.65,16.58)

Right end vertical not exposed to wind pressure.

See DWGS A11015EE0207 & GBLLETIN0207 for more requirements.

In lieu of structural panels use purlins to brace all flat TC @ 24" OC.

The building designer is responsible for the design of the roof and ceiling diaphragms, gable end shear walls, and supporting shear walls. Shear walls must provide continuous lateral restraint to the gable end. All connections to be designed by the building designer.

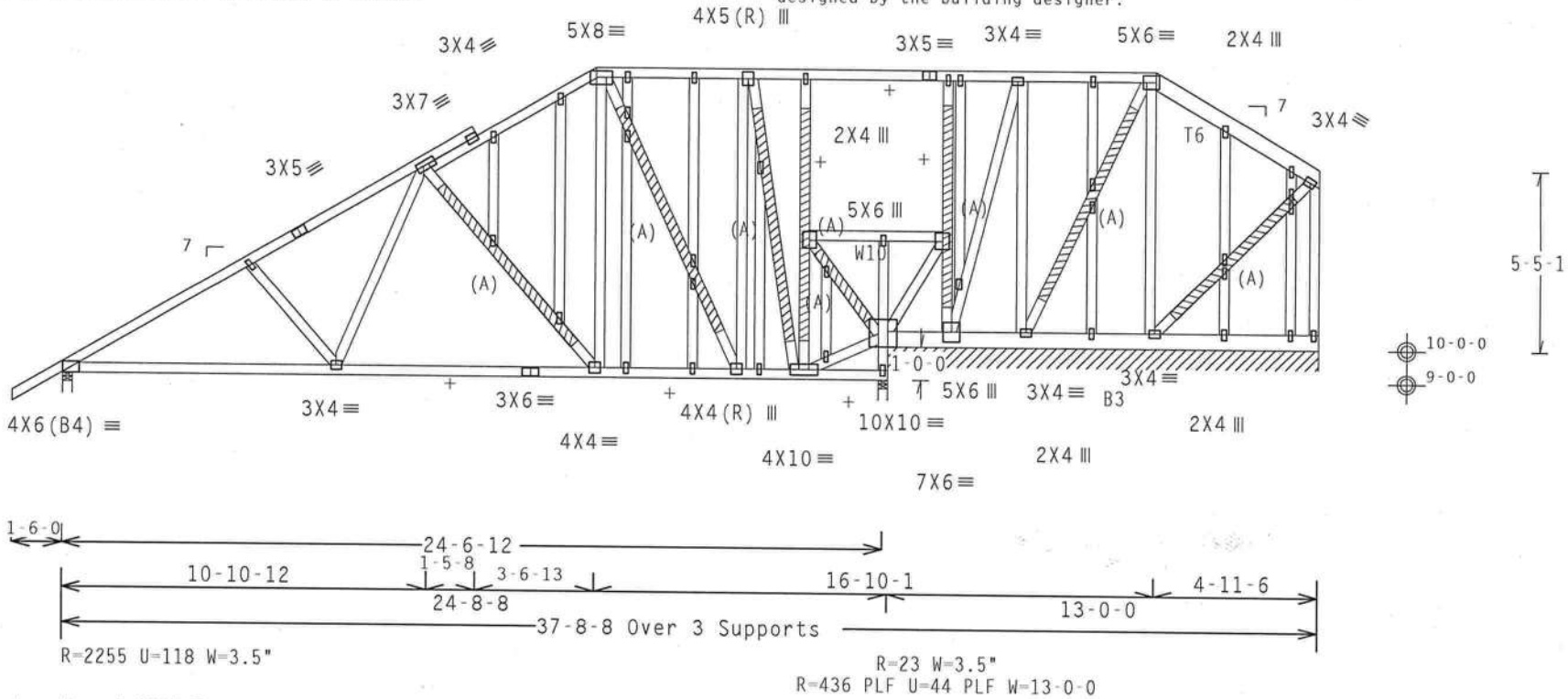

Note: All Plates Are 1.5X4 Except As Shown.

Design Crit: TPI-2002(STD)/FBC

PLT TYP. Wave

Cq/RT=1.00(1.25)/0(0) 7.36.00 [illegible] QTY:1 FL/-/4/-/-/R/- Scale =.1875"/Ft.

ALPINE
ITW Building Components Group Inc.
Haines City, FL 33844
FL COA #0278

WARNING TRUSSES REQUIRE EXTREME CARE IN FABRICATION, HANDLING, SHIPPING, INSTALLING AND BRACING. REFER TO BCSI (BUILDING COMPONENT SAFETY INFORMATION), PUBLISHED BY TPI (TRUSS PLATE INSTITUTE, 218 NORTH LEE STREET, SUITE 312, ALEXANDRIA, VA, 22314) AND WTCA (WOOD TRUSS COUNCIL OF AMERICA, 6300 ENTERPRISE LANE, MADISON, WI 53719) FOR SAFETY PRACTICES PRIOR TO PERFORMING THESE FUNCTIONS. UNLESS OTHERWISE INDICATED TOP CHORD SHALL HAVE PROPERLY ATTACHED STRUCTURAL PANELS AND BOTTOM CHORD SHALL HAVE A PROPERLY ATTACHED RIGID CEILING.

IMPORTANT FURNISH A COPY OF THIS DESIGN TO THE INSTALLATION CONTRACTOR. ITW BCG, INC. SHALL NOT BE RESPONSIBLE FOR ANY DEVIATION FROM THIS DESIGN; ANY FAILURE TO BUILD THE TRUSS IN CONFORMANCE WITH TPI; OR FABRICATING, HANDLING, SHIPPING, INSTALLING & BRACING OF TRUSSES.
DESIGN CONFORMS WITH APPLICABLE PROVISIONS OF NDS (NATIONAL DESIGN SPEC. BY AF&PA) AND TPI. ITW BCG CONNECTOR PLATES ARE MADE OF 20/18/16GA (W,H/SS/K) ASTM A653 GRADE 40/60 (W, K/H,SS) GALV. STEEL. APPLY PLATES TO EACH FACE OF TRUSS AND, UNLESS OTHERWISE LOCATED ON THIS DESIGN, POSITION PER DRAWINGS 160A-Z. ANY INSPECTION OF PLATES FOLLOWED BY (I) SHALL BE PER ANNEX A3 OF TPI1-2002 SEC.3. A SEAL ON THIS DRAWING INDICATES ACCEPTANCE OF PROFESSIONAL ENGINEERING RESPONSIBILITY SOLELY FOR THE TRUSS COMPONENT DESIGN SHOWN. THE SUITABILITY AND USE OF THIS COMPONENT FOR ANY BUILDING IS THE RESPONSIBILITY OF THE BUILDING DESIGNER PER ANSI/TPI 1 SEC. 2.

DOUGLAS FLEMING LICENSE No. 66648 STATE OF FLORIDA PROFESSIONAL ENGINEER
[illegible] 31 '08

TC LL	20.0 PSF	REF	R8228- 64280
TC DL	10.0 PSF	DATE	07/31/08
BC DL	10.0 PSF	DRW	HCUSR8228 08213045
BC LL	0.0 PSF	HC-ENG	JB/DF
TOT.LD.	40.0 PSF	SEQN-	37969
DUR.FAC.	1.25		
SPACING	24.0"	JREF-	1TJ08228Z02

(8-092--BRYAN ZECHER Lot #22 The Oaks -- , ** - BGE)

Top chord 2x4 SP #2 Dense :T4, T5 2x6 SP #2:
Bot chord 2x6 SP #2
Webs 2x4 SP #3 :W4, W6 2x4 SP #2 Dense:
:W13 2x6 SP #1 Dense:

110 mph wind, 15.06 ft mean hgt, ASCE 7-02, CLOSED bldg, Located anywhere in roof, CAT II, EXP B, wind TC DL=5.0 psf, wind BC DL=5.0 psf. Iw=1.00 GCpi(+/-)=0.18

Roof overhang supports 2.00 psf soffit load.

Truss spaced at 24.0" OC designed to support 2-0-0 top chord outlookers. Cladding load shall not exceed 10.00 PSF. Top chord must not be cut or notched.

(B) (2) #3 or better scab braces. Same size & 80% length of web member. Attach one to each face w/10d Box or Gun (0.128"x3",min.)nails @ 6" OC.

Deflection meets L/240 live and L/180 total load. Creep increase factor for dead load is 1.50.

The building designer is responsible for the design of the roof and ceiling diaphragms, gable end shear walls, and supporting shear walls. Shear walls must provide continuous lateral restraint to the gable end. All connections to be designed by the building designer.

Bearing blocks: Nail type: 12d_Common_(0.148"x3.25"._min.)_nails

BRG	X-LOC	#BLOCKS	LENGTH/BLK	#NAILS/BLK	WALL PLATE
2	45.208'	1	12"	6	Rigid Surface

Bearing block to be same size and species as bottom chord.
Refer to drawing CNBRGBLK0207 for additional information.

(**) 2 plate(s) require special positioning. Refer to scaled plate plot details for special positioning requirements.

Wind reactions based on MWFRS pressures.

Right end vertical not exposed to wind pressure.

See DWGS A11030EE0207 & GBLLETIN0207 for more requirements.

(A) #3 or better scab brace. Same size & 80% length of web member. Attach with 10d Box or Gun (0.128"x3",min.)nails @ 6" OC.

In lieu of structural panels use purlins to brace all flat TC @ 24" OC.

WARNING: Furnish a copy of this DWG to the installation contractor. Special care must be taken during handling, shipping and installation of trusses. See "WARNING" note below.

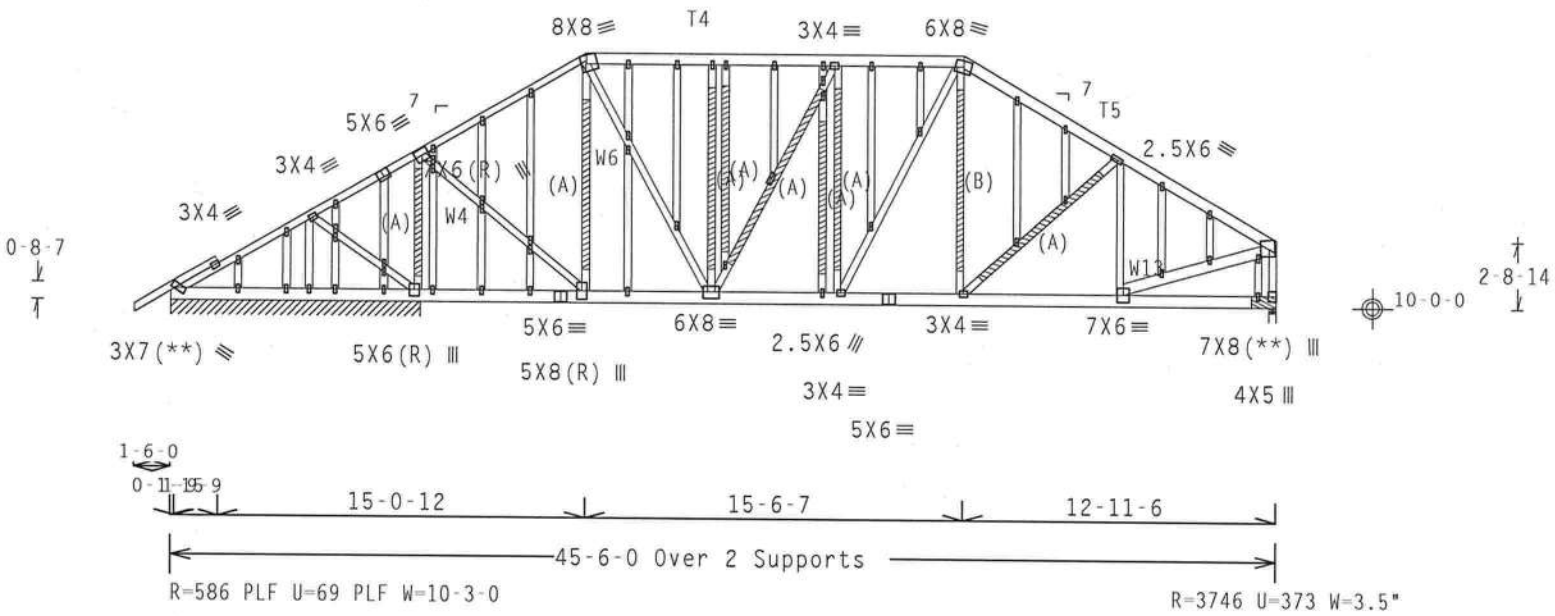

Note: All Plates Are 1.5X4 Except As Shown.

Design Crit: TPI-2002(STD)/FBC

PLT TYP. Wave

Cq/RT=1.00(1.25)/0(0) 7.36.00 [illegible] QTY:1 FL/-/4/-/-/R/- Scale =.125"/Ft.

ALPINE
ITW Building Components Group Inc.
Haines City, FL 33844
FL COA #0 278

WARNING TRUSSES REQUIRE EXTREME CARE IN FABRICATION, HANDLING, SHIPPING, INSTALLING AND BRACING. REFER TO BCSI (BUILDING COMPONENT SAFETY INFORMATION), PUBLISHED BY TPI (TRUSS PLATE INSTITUTE, 218 NORTH LEE STREET, SUITE 312, ALEXANDRIA, VA. 22314) AND WTCA (WOOD TRUSS COUNCIL OF AMERICA, 6300 ENTERPRISE LANE, MADISON, WI 53719) FOR SAFETY PRACTICES PRIOR TO PERFORMING THESE FUNCTIONS. UNLESS OTHERWISE INDICATED TOP CHORD SHALL HAVE PROPERLY ATTACHED STRUCTURAL PANELS AND BOTTOM CHORD SHALL HAVE A PROPERLY ATTACHED RIGID CEILING.

IMPORTANTFURNISH A COPY OF THIS DESIGN TO THE INSTALLATION CONTRACTOR. ITW BCG, INC. SHALL NOT BE RESPONSIBLE FOR ANY DEVIATION FROM THIS DESIGN; ANY FAILURE TO BUILD THE TRUSS IN COMFORMANCE WITH TPI; OR FABRICATING, HANDLING, SHIPPING, INSTALLING & BRACING OF TRUSSES.
DESIGN CONFORMS WITH APPLICABLE PROVISIONS OF NDS (NATIONAL DESIGN SPEC. BY AF&PA) AND TPI. ITW BCG CONNECTOR PLATES ARE MADE OF 20/18/16GA (W.H/SS/K) ASTM A653 GRADE 40/60 (W. K/H.SS) GALV. STEEL. APPLY PLATES TO EACH FACE OF TRUSS AND, UNLESS OTHERWISE LOCATED ON THIS DESIGN, POSITION PER DRAWINGS 160A-2. ANY INSPECTION OF PLATES FOLLOWED BY (1) SHALL BE PER ANNEX A3 OF TPI1-2002 SEC.3. A SEAL ON THIS DRAWING INDICATES ACCEPTANCE OF PROFESSIONAL ENGINEERING RESPONSIBILITY SOLELY FOR THE TRUSS COMPONENT DESIGN SHOWN. THE SUITABILITY AND USE OF THIS COMPONENT FOR ANY BUILDING IS THE RESPONSIBILITY OF THE BUILDING DESIGNER PER ANSI/TPI 1 SEC. 2.

DOUGLAS FLEMING LICENSE No. 66648 STATE OF FLORIDA PROFESSIONAL ENGINEER

[illegible]31 '08

TC LL	20.0 PSF	REF R8228- 64281
TC DL	10.0 PSF	DATE 07/31/08
BC DL	10.0 PSF	DRW HCUSR8228 08213046
BC LL	0.0 PSF	HC-ENG JB/DF
TOT.LD.	40.0 PSF	SEQN- 37983
DUR.FAC.	1.25	
SPACING	24.0"	JREF- 1TJ08228Z02

CLB WEB BRACE SUBSTITUTION

THIS DETAIL IS TO BE USED WHEN CONTINUOUS LATERAL BRACING (CLB) IS SPECIFIED ON AN ALPINE TRUSS DESIGN BUT AN ALTERNATIVE WEB BRACING METHOD IS DESIRED.

NOTES:

THIS DETAIL IS ONLY APPLICABLE FOR CHANGING THE SPECIFIED CLB SHOWN ON SINGLE PLY SEALED DESIGNS TO T-BRACING OR SCAB BRACING.

ALTERNATIVE BRACING SPECIFIED IN CHART BELOW MAY BE CONSERVATIVE. FOR MINIMUM ALTERNATIVE BRACING, RE-RUN DESIGN WITH APPROPRIATE BRACING.

WEB MEMBER SIZE	SPECIFIED CLB BRACING	ALTERNATIVE BRACING T OR L-BRACE	ALTERNATIVE BRACING SCAB BRACE
2X3 OR 2X4	1 ROW	2X4	1-2X4
2X3 OR 2X4	2 ROWS	2X6	2-2X4
2X6	1 ROW	2X4	1-2X6
2X6	2 ROWS	2X6	2-2X4(*)
2X8	1 ROW	2X6	1-2X8
2X8	2 ROWS	2X6	2-2X6(*)

T-BRACE, L-BRACE AND SCAB BRACE TO BE SAME SPECIES AND GRADE OR BETTER THAN WEB MEMBER UNLESS SPECIFIED OTHERWISE ON ENGINEER'S SEALED DESIGN.

(*) CENTER SCAB ON WIDE FACE OF WEB. APPLY (1) SCAB TO EACH FACE OF WEB.

T-BRACING OR L-BRACING:

APPLY TO EITHER SIDE OF WEB NARROW FACE. ATTACH WITH 10d BOX OR GUN (0.128"x 3.",MIN) NAILS. AT 6" O.C. BRACE IS A MINIMUM 80% OF WEB MEMBER LENGTH

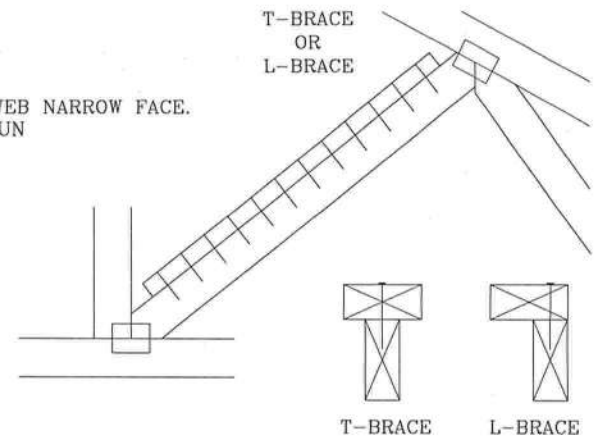

SCAB BRACING:

APPLY SCAB(S) TO WIDE FACE OF WEB. NO MORE THAN (1) SCAB PER FACE. ATTACH WITH 10d BOX OR GUN (0.128"x 3.",MIN) NAILS. AT 6" O.C. BRACE IS A MINIMUM 80% OF WEB MEMBER LENGTH

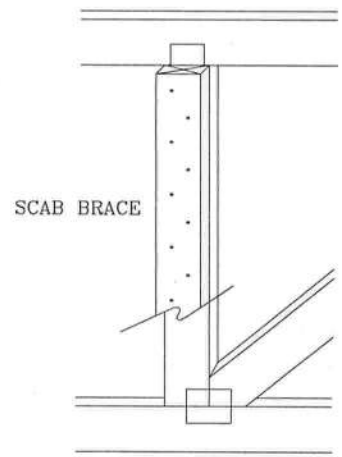

THIS DRAWING REPLACES DRAWING 579,640

ALPINE

ITW BUILDING COMPONENTS GROUP, INC.
POMPANO BEACH, FLORIDA

WARNING TRUSSES REQUIRE EXTREME CARE IN FABRICATING, HANDLING, SHIPPING, INSTALLING AND BRACING. REFER TO BCSI (BUILDING COMPONENT SAFETY INFORMATION), PUBLISHED BY TPI (TRUSS PLATE INSTITUTE, 218 NORTH LEE STR., SUITE 312, ALEXANDRIA, VA. 22314) AND WTCA (WOOD TRUSS COUNCIL OF AMERICA, 6300 ENTERPRISE LN, MADISON, WI 53719) FOR SAFETY PRACTICES PRIOR TO PERFORMING THESE FUNCTIONS. UNLESS OTHERWISE INDICATED, TOP CHORD SHALL HAVE PROPERLY ATTACHED STRUCTURAL PANELS AND BOTTOM CHORD SHALL HAVE A PROPERLY ATTACHED RIGID CEILING.

IMPORTANT FURNISH COPY OF THIS DESIGN TO INSTALLATION CONTRACTOR. ITW BCG, INC., SHALL NOT BE RESPONSIBLE FOR ANY DEVIATION FROM THIS DESIGN; ANY FAILURE TO BUILD THE TRUSS IN CONFORMANCE WITH TPI; OR FABRICATING, HANDLING, SHIPPING, INSTALLING & BRACING OF TRUSSES. DESIGN CONFORMS WITH APPLICABLE PROVISIONS OF NDS (NATIONAL DESIGN SPEC. BY AF&PA) AND TPI. ITW, BCG CONNECTOR PLATES ARE MADE OF 20/18/16GA (W,H/SS/K) ASTM A653 GRADE 40/60 (W,K/H,SS) GALV. STEEL. APPLY PLATES TO EACH FACE OF TRUSS AND, UNLESS OTHERWISE LOCATED ON THIS DESIGN, POSITION PER DRAWINGS 160A-Z. ANY INSPECTION OF PLATES FOLLOWED BY (1) SHALL BE PER ANNEX A3 OF TPI 1-2002 SEC. 3. A SEAL ON THIS DRAWING INDICATES ACCEPTANCE OF PROFESSIONAL ENGINEERING RESPONSIBILITY SOLELY FOR THE TRUSS COMPONENT DESIGN SHOWN. THE SUITABILITY AND USE OF THIS COMPONENT FOR ANY BUILDING IS THE RESPONSIBILITY OF THE BUILDING DESIGNER, PER ANSI/TPI 1 SEC. 2.

DOUGLAS FLEMING
LICENSE
No. 66648
STATE OF
FLORIDA
PROFESSIONAL ENGINEER

TC LL	PSF	
TC DL	PSF	
BC DL	PSF	
BC LL	PSF	
TOT. LD.	PSF	
DUR. FAC.		
SPACING		

REF	CLB SUBST.
DATE	2/23/07
DRWG	BRCLBSUB0207
-ENG	MLH/KAR

ASCE 7-02: 110 MPH WIND SPEED, 15' MEAN HEIGHT, ENCLOSED, I = 1.00, EXPOSURE C

MAX GABLE VERTICAL LENGTH

2X4 GABLE VERTICAL SPACING	SPECIES	GRADE \ BRACE	NO BRACES	(1) 1X4 "L" BRACE * GROUP A	(1) 1X4 "L" BRACE * GROUP B	(1) 2X4 "L" BRACE * GROUP A	(1) 2X4 "L" BRACE * GROUP B	(2) 2X4 "L" BRACE ** GROUP A	(2) 2X4 "L" BRACE ** GROUP B	(1) 2X6 "L" BRACE * GROUP A	(1) 2X6 "L" BRACE * GROUP B	(2) 2X6 "L" BRACE ** GROUP A	(2) 2X6 "L" BRACE ** GROUP B
24" O.C.	SPF HF	#1 / #2	3' 10"	6' 8"	6' 10"	7' 11"	8' 1"	9' 5"	9' 8"	12' 5"	12' 9"	14' 0"	14' 0"
		#3	3' 9"	6' 0"	6' 0"	7' 11"	7' 11"	9' 5"	9' 5"	12' 4"	12' 4"	14' 0"	14' 0"
		STUD	3' 9"	6' 0"	6' 0"	7' 11"	7' 11"	9' 5"	9' 5"	12' 3"	12' 3"	14' 0"	14' 0"
		STANDARD	3' 9"	5' 2"	5' 2"	6' 9"	6' 9"	9' 1"	9' 1"	10' 7"	10' 7"	14' 0"	14' 0"
	SP DFL	#1	4' 3"	6' 8"	7' 2"	7' 11"	8' 6"	9' 5"	10' 2"	12' 5"	13' 5"	14' 0"	14' 0"
		#2	4' 2"	6' 8"	7' 2"	7' 11"	8' 6"	9' 5"	10' 2"	12' 5"	13' 5"	14' 0"	14' 0"
		#3	4' 0"	6' 2"	6' 2"	7' 11"	8' 1"	9' 5"	9' 11"	12' 5"	12' 8"	14' 0"	14' 0"
		STUD	4' 0"	6' 1"	6' 1"	7' 11"	8' 0"	9' 5"	9' 11"	12' 5"	12' 6"	14' 0"	14' 0"
		STANDARD	3' 10"	5' 3"	5' 3"	6' 11"	6' 11"	9' 4"	9' 4"	10' 10"	10' 10"	14' 0"	14' 0"
16" O.C.	SPF HF	#1 / #2	4' 5"	7' 8"	7' 10"	9' 1"	9' 4"	10' 10"	11' 1"	14' 0"	14' 0"	14' 0"	14' 0"
		#3	4' 4"	7' 4"	7' 4"	9' 1"	9' 1"	10' 10"	10' 10"	14' 0"	14' 0"	14' 0"	14' 0"
		STUD	4' 4"	7' 4"	7' 4"	9' 1"	9' 1"	10' 10"	10' 10"	14' 0"	14' 0"	14' 0"	14' 0"
		STANDARD	4' 4"	6' 4"	6' 4"	8' 4"	8' 4"	10' 10"	10' 10"	12' 11"	12' 11"	14' 0"	14' 0"
	SP DFL	#1	4' 10"	7' 8"	8' 3"	9' 1"	9' 9"	10' 10"	11' 8"	14' 0"	14' 0"	14' 0"	14' 0"
		#2	4' 9"	7' 8"	8' 3"	9' 1"	9' 9"	10' 10"	11' 8"	14' 0"	14' 0"	14' 0"	14' 0"
		#3	4' 6"	7' 7"	7' 7"	9' 1"	9' 6"	10' 10"	11' 4"	14' 0"	14' 0"	14' 0"	14' 0"
		STUD	4' 6"	7' 6"	7' 6"	9' 1"	9' 6"	10' 10"	11' 4"	14' 0"	14' 0"	14' 0"	14' 0"
		STANDARD	4' 5"	6' 5"	6' 5"	8' 6"	8' 6"	10' 10"	11' 1"	13' 3"	13' 3"	14' 0"	14' 0"
12" O.C.	SPF HF	#1 / #2	4' 11"	8' 5"	8' 8"	10' 0"	10' 3"	11' 11"	12' 3"	14' 0"	14' 0"	14' 0"	14' 0"
		#3	4' 9"	8' 5"	8' 5"	10' 0"	10' 0"	11' 11"	11' 11"	14' 0"	14' 0"	14' 0"	14' 0"
		STUD	4' 9"	8' 5"	8' 5"	10' 0"	10' 0"	11' 11"	11' 11"	14' 0"	14' 0"	14' 0"	14' 0"
		STANDARD	4' 9"	7' 3"	7' 3"	9' 7"	9' 7"	11' 11"	11' 11"	14' 0"	14' 0"	14' 0"	14' 0"
	SP DFL	#1	5' 4"	8' 5"	9' 1"	10' 0"	10' 9"	11' 11"	12' 10"	14' 0"	14' 0"	14' 0"	14' 0"
		#2	5' 3"	8' 5"	9' 1"	10' 0"	10' 9"	11' 11"	12' 10"	14' 0"	14' 0"	14' 0"	14' 0"
		#3	5' 0"	8' 5"	8' 5"	10' 0"	10' 6"	11' 11"	12' 6"	14' 0"	14' 0"	14' 0"	14' 0"
		STUD	5' 0"	8' 5"	8' 7"	10' 0"	10' 6"	11' 11"	12' 6"	14' 0"	14' 0"	14' 0"	14' 0"
		STANDARD	4' 11"	7' 5"	7' 5"	9' 10"	9' 10"	11' 11"	12' 3"	14' 0"	14' 0"	14' 0"	14' 0"

BRACING GROUP SPECIES AND GRADES:

GROUP A:

SPRUCE-PINE-FIR

#1 / #2	STANDARD
#3	STUD

HEM-FIR

#2	STUD
#3	STANDARD

DOUGLAS FIR-LARCH

#3
STUD
STANDARD

SOUTHERN PINE

#3
STUD
STANDARD

GROUP B:

HEM-FIR

#1 & BTR
#1

SOUTHERN PINE

#1
#2

DOUGLAS FIR-LARCH

#1
#2

GABLE TRUSS DETAIL NOTES:

LIVE LOAD DEFLECTION CRITERIA IS L/240.

PROVIDE UPLIFT CONNECTIONS FOR 80 PLF OVER CONTINUOUS BEARING (5 PSF TC DEAD LOAD).

GABLE END SUPPORTS LOAD FROM 4' 0" OUTLOOKERS WITH 2' 0" OVERHANG, OR 12" PLYWOOD OVERHANG.

ATTACH EACH "L" BRACE WITH 10d NAILS.
* FOR (1) "L" BRACE: SPACE NAILS AT 2" O.C. IN 18" END ZONES AND 4" O.C. BETWEEN ZONES.
** FOR (2) "L" BRACES: SPACE NAILS AT 3" O.C. IN 18" END ZONES AND 6" O.C. BETWEEN ZONES.

"L" BRACING MUST BE A MINIMUM OF 80% OF WEB MEMBER LENGTH.

GABLE VERTICAL PLATE SIZES

VERTICAL LENGTH	NO SPLICE
LESS THAN 4' 0"	1X4 OR 2X3
GREATER THAN 4' 0", BUT LESS THAN 11' 6"	2X4
GREATER THAN 11' 6"	2.5X4

+ REFER TO COMMON TRUSS DESIGN FOR PEAK, SPLICE, AND HEEL PLATES.

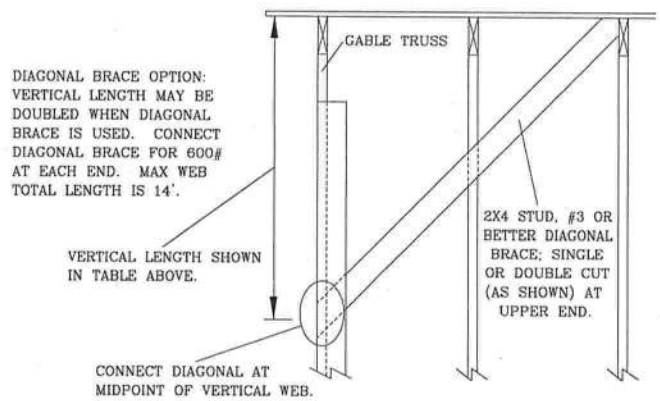

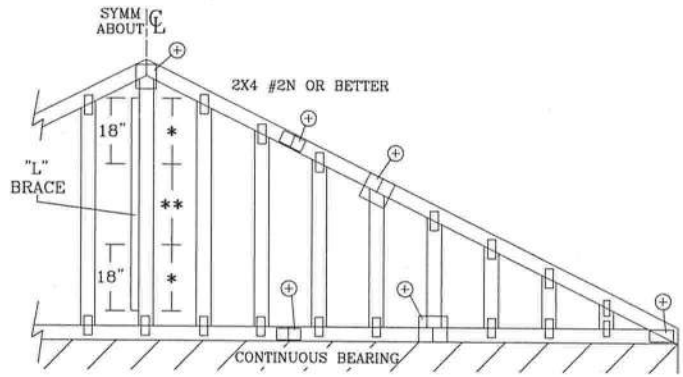

REFER TO CHART ABOVE FOR MAX GABLE VERTICAL LENGTH.

ALPINE

ITW BUILDING COMPONENTS GROUP, INC.
POMPANO BEACH, FLORIDA

WARNING TRUSSES REQUIRE EXTREME CARE IN FABRICATING, HANDLING, SHIPPING, INSTALLING AND BRACING. REFER TO BCSI (BUILDING COMPONENT SAFETY INFORMATION), PUBLISHED BY TPI (TRUSS PLATE INSTITUTE, 218 NORTH LEE STR., SUITE 312, ALEXANDRIA, VA. 22314) AND WTCA (WOOD TRUSS COUNCIL OF AMERICA, 6300 ENTERPRISE LN, MADISON, WI 53719) FOR SAFETY PRACTICES PRIOR TO PERFORMING THESE FUNCTIONS. UNLESS OTHERWISE INDICATED, TOP CHORD SHALL HAVE PROPERLY ATTACHED STRUCTURAL PANELS AND BOTTOM CHORD SHALL HAVE A PROPERLY ATTACHED RIGID CEILING.

IMPORTANT FURNISH COPY OF THIS DESIGN TO INSTALLATION CONTRACTOR. ITW BCG, INC., SHALL NOT BE RESPONSIBLE FOR ANY DEVIATION FROM THIS DESIGN; ANY FAILURE TO BUILD THE TRUSS IN CONFORMANCE WITH TPI; OR FABRICATING, HANDLING, SHIPPING, INSTALLING & BRACING OF TRUSSES. DESIGN CONFORMS WITH APPLICABLE PROVISIONS OF NDS (NATIONAL DESIGN SPEC. BY AF&PA) AND TPI. ITW, BCG CONNECTOR PLATES ARE MADE OF 20/18/16GA (W,H/SS/K) ASTM A653 GRADE 40/60 (W,K/H,SS) GALV. STEEL. APPLY PLATES TO EACH FACE OF TRUSS AND, UNLESS OTHERWISE LOCATED ON THIS DESIGN, POSITION PER DRAWINGS 160A-Z. ANY INSPECTION OF PLATES FOLLOWED BY (I) SHALL BE PER ANNEX A3 OF TPI 1-2002 SEC. 3. A SEAL ON THIS DRAWING INDICATES ACCEPTANCE OF PROFESSIONAL ENGINEERING RESPONSIBILITY SOLELY FOR THE TRUSS COMPONENT DESIGN SHOWN. THE SUITABILITY AND USE OF THIS COMPONENT FOR ANY BUILDING IS THE RESPONSIBILITY OF THE BUILDING DESIGNER, PER ANSI/TPI 1 SEC. 2.

DOUGLAS FLEMING LICENSE No. 66648 STATE OF FLORIDA PROFESSIONAL ENGINEER

MAX. TOT. LD. 60 PSF

MAX. SPACING 24.0"

REF	ASCE7-02-GAB11015
DATE	2/23/07
DRWG	A11015EE0207
-ENG	

GABLE DETAIL
FOR LET-IN VERTICALS

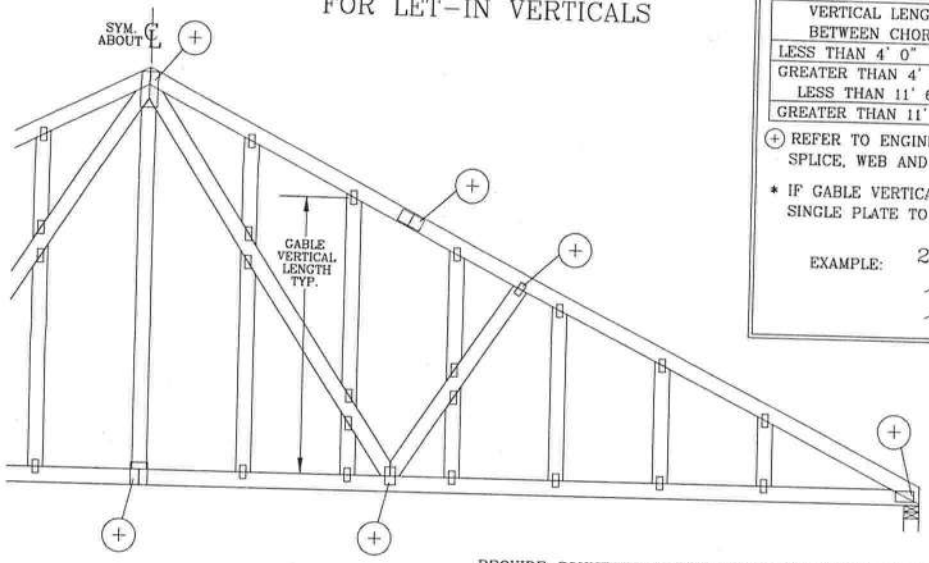

GABLE VERTICAL PLATE SIZES		
VERTICAL LENGTH BETWEEN CHORDS	PLATE SIZE	IF PLATES OVERLAP*
LESS THAN 4' 0"	1X4 OR 2X3	2X8
GREATER THAN 4' 0", BUT LESS THAN 11' 6"	2X4	2X8
GREATER THAN 11' 6"	2.5X4	2.5X8

(+) REFER TO ENGINEERED TRUSS DESIGN FOR PEAK, SPLICE, WEB AND HEEL PLATES.

* IF GABLE VERTICAL PLATES OVERLAP, USE A SINGLE PLATE TO SPAN THE WEB.

EXAMPLE:

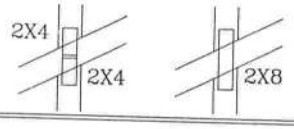

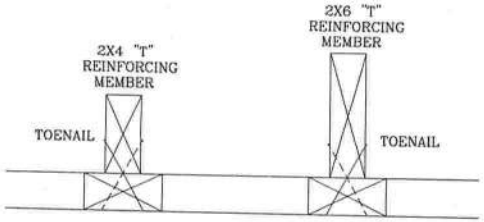

TO CONVERT FROM "L" TO "T" REINFORCING MEMBERS, MULTIPLY "T" FACTOR BY LENGTH (BASED ON GABLE VERTICAL SPECIES, GRADE AND SPACING) FOR (1) 2X4 "L" BRACE, GROUP A. OBTAINED FROM THE APPROPRIATE ALPINE GABLE DETAIL FOR ASCE OR SBCCI WIND LOAD.

MAXIMUM ALLOWABLE "T" REINFORCED GABLE VERTICAL LENGTH IS 14' FROM TOP TO BOTTOM CHORD.

WEB LENGTH INCREASE W/ "T" BRACE

WIND SPEED AND MRH	"T" REINF. MBR. SIZE	SBCCI	ASCE
110 MPH 15 FT	2x4	10 %	10 %
	2x6	40 %	50 %
110 MPH 30 FT	2x4	10 %	10 %
	2x6	50 %	50 %
100 MPH 15 FT	2x4	10 %	10 %
	2x6	30 %	50 %
100 MPH 30 FT	2x4	10 %	10 %
	2x6	40 %	40 %
90 MPH 15 FT	2x4	20 %	10 %
	2x6	20 %	40 %
90 MPH 30 FT	2x4	10 %	10 %
	2x6	30 %	50 %
80 MPH 15 FT	2x4	10 %	20 %
	2x6	10 %	30 %
80 MPH 30 FT	2x4	20 %	10 %
	2x6	20 %	40 %
70 MPH 15 FT	2x4	0 %	20 %
	2x6	0 %	20 %
70 MPH 30 FT	2x4	10 %	20 %
	2x6	10 %	30 %

EXAMPLE:
ASCE WIND SPEED = 100 MPH
MEAN ROOF HEIGHT = 30 FT
GABLE VERTICAL = 24" O.C. SP #3
"T" REINFORCING MEMBER SIZE = 2X4
"T" BRACE INCREASE (FROM ABOVE) = 10% = 1.10
(1) 2X4 "L" BRACE LENGTH = 6' 7"
MAXIMUM "T" REINFORCED GABLE VERTICAL LENGTH
1.10 x 6' 7" = 7' 3"

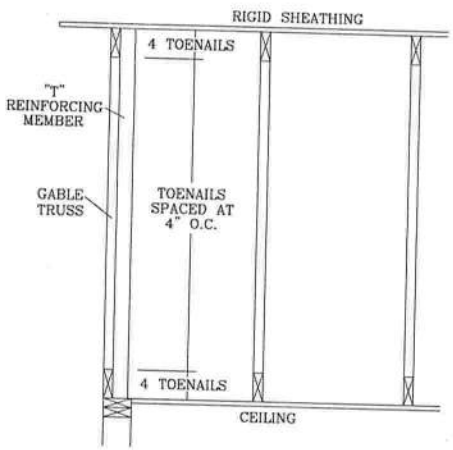

PROVIDE CONNECTIONS FOR UPLIFT SPECIFIED ON THE ENGINEERED TRUSS DESIGN.

ATTACH EACH "T" REINFORCING MEMBER WITH
HAND DRIVEN NAILS:
10d COMMON (0.148"X 3.",MIN) TOENAILS AT 4" O.C. PLUS
(4) 16d COMMON (0.162" X 3.5",MIN) TOENAILS IN TOP AND BOTTOM CHORD.
GUN DRIVEN NAILS:
8d COMMON (0.131"X 2.5",MIN) TOENAILS AT 4" O.C. PLUS
(4) TOENAILS IN TOP AND BOTTOM CHORD.

THIS DETAIL TO BE USED WITH THE APPROPRIATE ALPINE GABLE DETAIL FOR ASCE OR SBCCI WIND LOAD.
ASCE 7-93 GABLE DETAIL DRAWINGS
A11015EN0207, A10015EN0207, A09015EN0207, A08015EN0207, A07015EN0207,
A11030EN0207, A10030EN0207, A09030EN0207, A08030EN0207, A07030EN0207
ASCE 7-98 GABLE DETAIL DRAWINGS
A13015EC0207, A12015EC0207, A11015EC0207, A10015EC0207, A08515EC0207,
A13030EC0207, A12030EC0207, A11030EC0207, A10030EC0207, A08530EC0207
ASCE 7-02 GABLE DETAIL DRAWINGS
A13015EE0207, A12015EE0207, A11015EE0207, A10015EE0207, A08515EE0207,
A13030EE0207, A12030EE0207, A11030EE0207, A10030EE0207, A08530EE0207
ASCE 7-05 GABLE DETAIL DRAWINGS
A13015E50207, A12015E50207, A11015E50207, A10015E50207, A08515E50207,
A13030E50207, A12030E50207, A11030E50207, A10030E50207, A08530E50207

SEE APPROPRIATE ALPINE GABLE DETAIL (ASCE OR SBCCI WIND LOAD) FOR MAXIMUM UNREINFORCED GABLE VERTICAL LENGTH.

THIS DRAWING REPLACES DRAWINGS GAB98117 876,719 & HC26294035

ALPINE
ITW BUILDING COMPONENTS GROUP, INC.
POMPANO BEACH, FLORIDA

WARNING TRUSSES REQUIRE EXTREME CARE IN FABRICATING, HANDLING, SHIPPING, INSTALLING AND BRACING. REFER TO BCSI (BUILDING COMPONENT SAFETY INFORMATION), PUBLISHED BY TPI (TRUSS PLATE INSTITUTE, 218 NORTH LEE STR., SUITE 312, ALEXANDRIA, VA. 22314) AND WTCA (WOOD TRUSS COUNCIL OF AMERICA, 6300 ENTERPRISE LN, MADISON, WI 53719) FOR SAFETY PRACTICES PRIOR TO PERFORMING THESE FUNCTIONS. UNLESS OTHERWISE INDICATED, TOP CHORD SHALL HAVE PROPERLY ATTACHED STRUCTURAL PANELS AND BOTTOM CHORD SHALL HAVE A PROPERLY ATTACHED RIGID CEILING.

IMPORTANT FURNISH COPY OF THIS DESIGN TO INSTALLATION CONTRACTOR. ITW BCG, INC., SHALL NOT BE RESPONSIBLE FOR ANY DEVIATION FROM THIS DESIGN; ANY FAILURE TO BUILD THE TRUSS IN CONFORMANCE WITH TPI; OR FABRICATING, HANDLING, SHIPPING, INSTALLING & BRACING OF TRUSSES. DESIGN CONFORMS WITH APPLICABLE PROVISIONS OF NDS (NATIONAL DESIGN SPEC, BY AF&PA) AND TPI. ITW, BCG CONNECTOR PLATES ARE MADE OF 20/18/16GA (W,H/SS/K) ASTM A653 GRADE 40/60 (W,K/H,SS) GALV. STEEL. APPLY PLATES TO EACH FACE OF TRUSS AND, UNLESS OTHERWISE LOCATED ON THIS DESIGN, POSITION PER DRAWINGS 160A-Z. ANY INSPECTION OF PLATES FOLLOWED BY (I) SHALL BE PER ANNEX A3 OF TPI 1-2002 SEC. 3. A SEAL ON THIS DRAWING INDICATES ACCEPTANCE OF PROFESSIONAL ENGINEERING RESPONSIBILITY SOLELY FOR THE TRUSS COMPONENT DESIGN SHOWN. THE SUITABILITY AND USE OF THIS COMPONENT FOR ANY BUILDING IS THE RESPONSIBILITY OF THE BUILDING DESIGNER, PER ANSI/TPI 1 SEC. 2.

JUL 3 '08

DOUGLAS FLEMING LICENSE No. 66648 STATE OF FLORIDA PROFESSIONAL ENGINEER

MAX TOT. LD. 60 PSF
DUR. FAC. ANY
MAX SPACING 24.0"

REF	LET-IN VERT
DATE	2/23/07
DRWG	GBLLETIN0207
-ENG	DLJ/KAR

ASCE 7-02: 110 MPH WIND SPEED, 30' MEAN HEIGHT, ENCLOSED, I = 1.00, EXPOSURE C

MAX GABLE VERTICAL LENGTH

2X4 GABLE VERTICAL SPACING	SPECIES	BRACE GRADE	NO BRACES	(1) 1X4 "L" BRACE * GROUP A	(1) 1X4 "L" BRACE * GROUP B	(1) 2X4 "L" BRACE * GROUP A	(1) 2X4 "L" BRACE * GROUP B	(2) 2X4 "L" BRACE ** GROUP A	(2) 2X4 "L" BRACE ** GROUP B	(1) 2X6 "L" BRACE * GROUP A	(1) 2X6 "L" BRACE * GROUP B	(2) 2X6 "L" BRACE ** GROUP A	(2) 2X6 "L" BRACE ** GROUP B
24" O.C.	SPF HF	#1 / #2	3' 8"	6' 4"	6' 6"	7' 6"	7' 8"	8' 11"	9' 2"	11' 9"	12' 1"	14' 0"	14' 0"
		#3	3' 7"	5' 5"	5' 5"	7' 2"	7' 2"	8' 11"	8' 11"	11' 2"	11' 2"	14' 0"	14' 0"
		STUD	3' 7"	5' 5"	5' 5"	7' 1"	7' 1"	8' 11"	8' 11"	11' 1"	11' 1"	14' 0"	14' 0"
		STANDARD	3' 7"	4' 8"	4' 8"	6' 1"	6' 1"	8' 3"	8' 3"	9' 6"	9' 6"	12' 11"	12' 11"
	SP DFL	#1	4' 0"	6' 4"	6' 10"	7' 6"	8' 1"	8' 11"	9' 7"	11' 9"	12' 8"	14' 0"	14' 0"
		#2	3' 11"	6' 4"	6' 10"	7' 6"	8' 1"	8' 11"	9' 7"	11' 9"	12' 8"	14' 0"	14' 0"
		#3	3' 9"	5' 7"	5' 7"	7' 4"	7' 4"	8' 11"	9' 5"	11' 5"	11' 5"	14' 0"	14' 0"
		STUD	3' 9"	5' 6"	5' 6"	7' 3"	7' 3"	8' 11"	9' 5"	11' 4"	11' 4"	14' 0"	14' 0"
		STANDARD	3' 8"	4' 9"	4' 9"	6' 3"	6' 3"	8' 5"	8' 5"	9' 9"	9' 9"	13' 3"	14' 0"
16" O.C.	SPF HF	#1 / #2	4' 2"	7' 3"	7' 5"	8' 7"	8' 10"	10' 3"	10' 6"	13' 5"	13' 10"	14' 0"	14' 0"
		#3	4' 1"	6' 8"	6' 8"	8' 7"	8' 7"	10' 3"	10' 3"	13' 5"	13' 5"	14' 0"	14' 0"
		STUD	4' 1"	8' 0"	8' 0"	8' 7"	8' 7"	10' 3"	10' 3"	13' 5"	13' 5"	14' 0"	14' 0"
		STANDARD	4' 1"	5' 8"	5' 8"	7' 6"	7' 6"	10' 1"	10' 1"	11' 8"	11' 8"	14' 0"	14' 0"
	SP DFL	#1	4' 7"	7' 3"	7' 9"	8' 7"	9' 3"	10' 3"	11' 0"	13' 5"	14' 0"	14' 0"	14' 0"
		#2	4' 6"	7' 3"	7' 9"	8' 7"	9' 3"	10' 3"	11' 0"	13' 5"	14' 0"	14' 0"	14' 0"
		#3	4' 4"	6' 10"	6' 10"	8' 7"	9' 0"	10' 3"	10' 9"	13' 5"	14' 0"	14' 0"	14' 0"
		STUD	4' 4"	6' 9"	6' 9"	8' 7"	8' 11"	10' 3"	10' 9"	13' 5"	14' 0"	14' 0"	14' 0"
		STANDARD	4' 2"	5' 10"	5' 10"	7' 8"	7' 8"	10' 3"	10' 4"	11' 11"	11' 11"	14' 0"	14' 0"
12" O.C.	SPF HF	#1 / #2	4' 7"	8' 0"	8' 2"	9' 5"	9' 8"	11' 3"	11' 7"	14' 0"	14' 0"	14' 0"	14' 0"
		#3	4' 6"	7' 8"	7' 8"	9' 5"	9' 5"	11' 3"	11' 3"	14' 0"	14' 0"	14' 0"	14' 0"
		STUD	4' 6"	7' 8"	7' 8"	9' 5"	9' 5"	11' 3"	11' 3"	14' 0"	14' 0"	14' 0"	14' 0"
		STANDARD	4' 6"	6' 7"	6' 7"	8' 8"	8' 8"	11' 3"	11' 3"	13' 6"	13' 6"	14' 0"	14' 0"
	SP DFL	#1	5' 1"	8' 0"	8' 7"	9' 5"	10' 2"	11' 3"	12' 1"	14' 0"	14' 0"	14' 0"	14' 0"
		#2	4' 11"	8' 0"	8' 7"	9' 5"	10' 2"	11' 3"	12' 1"	14' 0"	14' 0"	14' 0"	14' 0"
		#3	4' 9"	7' 11"	7' 11"	9' 5"	9' 11"	11' 3"	11' 10"	14' 0"	14' 0"	14' 0"	14' 0"
		STUD	4' 9"	7' 9"	7' 9"	9' 5"	9' 11"	11' 3"	11' 10"	14' 0"	14' 0"	14' 0"	14' 0"
		STANDARD	4' 7"	6' 9"	6' 9"	8' 10"	8' 10"	11' 3"	11' 7"	13' 10"	13' 10"	14' 0"	14' 0"

BRACING GROUP SPECIES AND GRADES:

GROUP A:

SPRUCE-PINE-FIR

#1 / #2	STANDARD
#3	STUD

HEM-FIR

#2	STUD
#3	STANDARD

DOUGLAS FIR-LARCH

#3
STUD
STANDARD

SOUTHERN PINE

#3
STUD
STANDARD

GROUP B:

HEM-FIR

#1 & BTR
#1

SOUTHERN PINE

#1
#2

DOUGLAS FIR-LARCH

#1
#2

GABLE TRUSS DETAIL NOTES:

LIVE LOAD DEFLECTION CRITERIA IS L/240.

PROVIDE UPLIFT CONNECTIONS FOR 100 PLF OVER CONTINUOUS BEARING (5 PSF TC DEAD LOAD).

GABLE END SUPPORTS LOAD FROM 4' 0" OUTLOOKERS WITH 2' 0" OVERHANG, OR 12" PLYWOOD OVERHANG.

ATTACH EACH "L" BRACE WITH 10d NAILS.

* FOR (1) "L" BRACE: SPACE NAILS AT 2" O.C. IN 18" END ZONES AND 4" O.C. BETWEEN ZONES.

** FOR (2) "L" BRACES: SPACE NAILS AT 3" O.C. IN 18" END ZONES AND 6" O.C. BETWEEN ZONES.

"L" BRACING MUST BE A MINIMUM OF 80% OF WEB MEMBER LENGTH.

GABLE VERTICAL PLATE SIZES

VERTICAL LENGTH	NO SPLICE
LESS THAN 4' 0"	1X4 OR 2X3
GREATER THAN 4' 0", BUT LESS THAN 11' 6"	2X4
GREATER THAN 11' 6"	2.5X4

\+ REFER TO COMMON TRUSS DESIGN FOR PEAK, SPLICE, AND HEEL PLATES.

DIAGONAL BRACE OPTION: VERTICAL LENGTH MAY BE DOUBLED WHEN DIAGONAL BRACE IS USED. CONNECT DIAGONAL BRACE FOR 700# AT EACH END. MAX WEB TOTAL LENGTH IS 14'.

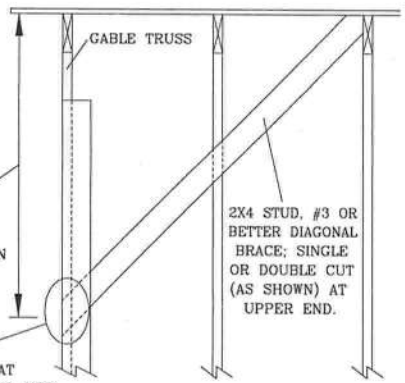

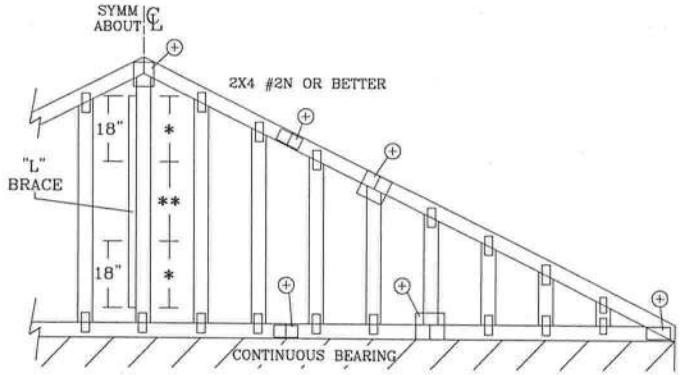

REFER TO CHART ABOVE FOR MAX GABLE VERTICAL LENGTH.

ALPINE

ITW BUILDING COMPONENTS GROUP, INC.
POMPANO BEACH, FLORIDA

WARNING TRUSSES REQUIRE EXTREME CARE IN FABRICATING, HANDLING, SHIPPING, INSTALLING AND BRACING. REFER TO BCSI (BUILDING COMPONENT SAFETY INFORMATION), PUBLISHED BY TPI (TRUSS PLATE INSTITUTE, 218 NORTH LEE STR., SUITE 312, ALEXANDRIA, VA. 22314) AND WTCA (WOOD TRUSS COUNCIL OF AMERICA, 6300 ENTERPRISE LN, MADISON, WI 53719) FOR SAFETY PRACTICES PRIOR TO PERFORMING THESE FUNCTIONS. UNLESS OTHERWISE INDICATED, TOP CHORD SHALL HAVE PROPERLY ATTACHED STRUCTURAL PANELS AND BOTTOM CHORD SHALL HAVE A PROPERLY ATTACHED RIGID CEILING.

IMPORTANT FURNISH COPY OF THIS DESIGN TO INSTALLATION CONTRACTOR. ITW BCG, INC., SHALL NOT BE RESPONSIBLE FOR ANY DEVIATION FROM THIS DESIGN; ANY FAILURE TO BUILD THE TRUSS IN CONFORMANCE WITH TPI; OR FABRICATING, HANDLING, SHIPPING, INSTALLING & BRACING OF TRUSSES. DESIGN CONFORMS WITH APPLICABLE PROVISIONS OF NDS (NATIONAL DESIGN SPEC, BY AF&PA) AND TPI. ITW, BCG CONNECTOR PLATES ARE MADE OF 20/18/16GA (W,H/SS/K) ASTM A653 GRADE 40/60 (W,K/H,SS) GALV. STEEL. APPLY PLATES TO EACH FACE OF TRUSS AND, UNLESS OTHERWISE LOCATED ON THIS DESIGN, POSITION PER DRAWINGS 160A-Z. ANY INSPECTION OF PLATES FOLLOWED BY (I) SHALL BE PER ANNEX A3 OF TPI 1-2002 SEC. 3. A SEAL ON THIS DRAWING INDICATES ACCEPTANCE OF PROFESSIONAL ENGINEERING RESPONSIBILITY SOLELY FOR THE TRUSS COMPONENT DESIGN SHOWN. THE SUITABILITY AND USE OF THIS COMPONENT FOR ANY BUILDING IS THE RESPONSIBILITY OF THE BUILDING DESIGNER, PER ANSI/TPI 1 SEC. 2.

DOUGLAS FLEMING LICENSE No. 66648 STATE OF FLORIDA PROFESSIONAL ENGINEER 01 31 08

MAX. TOT. LD. 60 PSF

MAX. SPACING 24.0"

REF	ASCE7-02-GAB11030
DATE	2/23/07
DRWG	A11030EE0207
-ENG	

BEARING BLOCK NAIL SPACING DETAIL

MINIMUM SPACING FOR SINGLE BEARING BLOCK IS SHOWN. DOUBLE NAIL SPACINGS AND STAGGER NAILING FOR TWO BLOCKS. GREATER SPACING MAY BE REQUIRED TO AVOID SPLITTING.

A – EDGE DISTANCE AND SPACING BETWEEN STAGGERED ROWS OF NAILS (6 NAIL DIAMETERS)
B – SPACING OF NAILS IN A ROW (12 NAIL DIAMETERS)
C – END DISTANCE (15 NAIL DIAMETERS)

IF NAIL HOLES ARE PREBORED, SOME SPACING MAY BE REDUCED BY THE AMOUNTS GIVEN BELOW:
- • SPACING MAY BE REDUCED BY 50%
- •• SPACING MAY BE REDUCED BY 33%

BEARING BLOCK TO BE SAME SIZE AND SPECIES AS BOTTOM CHORD. BLOCKS MAY BE ANY GRADE WITHIN THE SPECIES, PROVIDED THE COMPRESSION PERPENDICULAR TO GRAIN VALUE (Fc-perp) IS AT LEAST THAT OF THE CHORD.

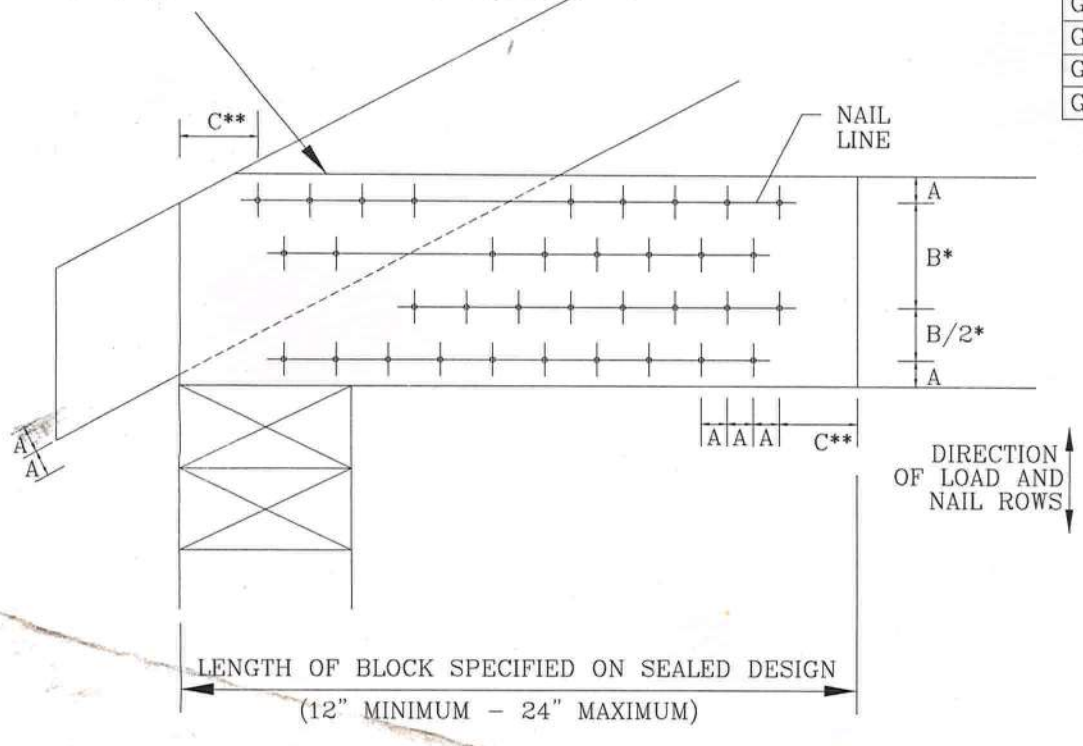

MAXIMUM NUMBER OF NAIL LINES PARALLEL TO GRAIN

NAIL TYPE	CHORD SIZE 2X4	2X6	2X8	2X10	2X12
8d BOX (0.113"X 2.5",MIN)	3	6	9	12	15
10d BOX (0.128"X 3.",MIN)	3	5	7	10	12
12d BOX (0.128"X 3.25",MIN)	3	5	7	10	12
16d BOX (0.135"X 3.5",MIN)	3	5	7	10	12
20d BOX (0.148"X 4.",MIN)	2	4	5	6	8
8d COMMON (0.131"X 2.5",MIN)	3	5	7	10	12
10d COMMON (0.148"X 3.",MIN)	2	4	6	8	10
12d COMMON (0.148"X 3.25",MIN)	2	4	6	8	10
16d COMMON (0.162"X 3.5",MIN)	2	4	6	8	10
GUN (0.120"X 2.5",MIN)	3	6	8	11	14
GUN (0.131"X 2.5",MIN)	3	5	7	10	12
GUN (0.120"X 3.",MIN)	3	6	8	11	14
GUN (0.131"X 3.",MIN)	3	5	7	10	12

MINIMUM NAIL SPACING DISTANCES

NAIL TYPE	DISTANCES A	B*	C**
8d BOX (0.113"X 2.5",MIN)	3/4"	1 3/8"	1 3/4"
10d BOX (0.128"X 3.",MIN)	7/8"	1 5/8"	2"
12d BOX (0.128"X 3.25",MIN)	7/8"	1 5/8"	2"
16d BOX (0.135"X 3.5",MIN)	7/8"	1 5/8"	2 1/8"
20d BOX (0.148"X 4.",MIN)	1"	1 7/8"	2 1/4"
8d COMMON (0.131"X 2.5",MIN)	7/8"	1 5/8"	2"
10d COMMON (0.148"X 3.",MIN)	1"	1 7/8"	2 1/4"
12d COMMON (0.148"X 3.25",MIN)	1"	1 7/8"	2 1/4"
16d COMMON (0.162"X 3.5",MIN)	1'	2"	2 1/2"
GUN (0.120"X 2.5",MIN)	3/4"	1 1/2"	1 7/8"
GUN (0.131"X 2.5",MIN)	7/8"	1 5/8"	2"
GUN (0.120"X 3.",MIN)	3/4"	1 1/2"	1 7/8"
GUN (0.131"X 3.",MIN)	7/8"	1 5/8"	2"

THIS DRAWING REPLACES DRAWING B139 AND CNBRGBLK0699

ALPINE
ITW BUILDING COMPONENTS GROUP, INC.
POMPANO BEACH, FLORIDA

WARNING TRUSSES REQUIRE EXTREME CARE IN FABRICATING, HANDLING, SHIPPING, INSTALLING AND BRACING. REFER TO BCSI (BUILDING COMPONENT SAFETY INFORMATION), PUBLISHED BY TPI (TRUSS PLATE INSTITUTE, 218 NORTH LEE STR., SUITE 312 ALEXANDRIA, VA. 22314) AND WTCA (WOOD TRUSS COUNCIL OF AMERICA, 6300 ENTERPRISE LN, MADISON, WI 53719) FOR SAFETY PRACTICES PRIOR TO PERFORMING THESE FUNCTIONS. UNLESS OTHERWISE INDICATED, TOP CHORD SHALL HAVE PROPERLY ATTACHED STRUCTURAL PANELS AND BOTTOM CHORD SHALL HAVE A PROPERLY ATTACHED RIGID CEILING.

IMPORTANT FURNISH COPY OF THIS DESIGN TO INSTALLATION CONTRACTOR. ITW BCG, INC., SHALL NOT BE RESPONSIBLE FOR ANY DEVIATION FROM THIS DESIGN; ANY FAILURE TO BUILD THE TRUSS IN CONFORMANCE WITH TPI; OR FABRICATING, HANDLING, SHIPPING, INSTALLING & BRACING OF TRUSSES. DESIGN CONFORMS WITH APPLICABLE PROVISIONS OF NDS (NATIONAL DESIGN SPEC. BY AF&PA) AND TPI. ITW, BCG CONNECTOR PLATES ARE MADE OF 20/18/16GA (W,H/SS/K) ASTM A653 GRADE 40/60 (W,K/H,SS) GALV. STEEL. APPLY PLATES TO EACH FACE OF TRUSS AND, UNLESS OTHERWISE LOCATED ON THIS DESIGN, POSITION PER DRAWINGS 160A-Z. ANY INSPECTION OF PLATES FOLLOWED BY (I) SHALL BE PER ANNEX A3 OF TPI 1-2002 SEC. 3. A SEAL ON THIS DRAWING INDICATES ACCEPTANCE OF PROFESSIONAL ENGINEERING RESPONSIBILITY SOLELY FOR THE TRUSS COMPONENT DESIGN SHOWN. THE SUITABILITY AND USE OF THIS COMPONENT FOR ANY BUILDING IS THE RESPONSIBILITY OF THE BUILDING DESIGNER, PER ANSI/TPI 1 SEC. 2.

Jul 3 '08
DOUGLAS FLEMING LICENSE No. 66648 STATE OF FLORIDA PROFESSIONAL ENGINEER

REF	BEARING BLOCK
DATE	2/23/07
DRWG	CNBRGBLK0207
-ENG	SJP/KAR

The text appearing below has been reproduced from ANSI/TPI 1-2002, Chapter 2 with permission from the publisher, the Truss Plate Institute (TPI), www.tpinst.org. For information on design responsbi-lities contact your Truss Manufacturer or the Wood Truss Council of America (WTCA) at 608/274-4849 or www.woodtruss.com

2.6 CONSTRUCTION RELATED ITEMS

2.6.1 Truss Submittals and Structural Element Submittals, and any supplemental information provided by the Truss Manufacturer, shall be provided to the Contractor or the individual or organization responsible for the installation of the Trusses and Structural Elements.

2.6.2 The Building Designer shall be responsible for determining appropriate field storage, handling, and installation measures for the Trusses and Structural Elements. The Contractor, unless otherwise specifically assigned by Contract, shall determine the requirements of, and provide all materials for construction in accordance with the Structural Design Documents. These requirements and materials for construction shall include all necessary items for safe construction, including design and installation of, adequate temporary bracing during construction for the Building Structural System.

2.6.3 The Contractor shall be responsible, unless otherwise assigned by Contract, to review or inspect Trusses delivered or to review and inspect Trusses after erection for any problems, including dislodged/missing connectors, cracked, dislodged or broken members, or any other damage that may impair the structural integrity of the Truss. In the event that damage to the Truss is discovered that would likely impair the structural integrity of the Truss, the Contractor shall be responsible to ensure that the Truss not be erected and that any area within the Building supported by any such Truss already erected shall be appropriately shored or supported to prevent further damage from occurring and shall remain clear and free of any load imposed by people, plumbing, electrical, mechanical, bridging, bracing, etc. until such field repairs have been properly completed. In the event of such damage and unless otherwise specified by Contract, the Contractor shall contact the appropriate design professional to determine an adequate field repair and the Contractor shall be responsible to construct any such field repair.

2.6.4 All Truss repairs shall be approved in writing by a Building Designer or a Truss Designer or other qualified person prior to the performance of the repair.

2.6.5 The Truss Manufacturer and Truss Designer are not responsible for, nor do the Truss Manufacturer and Truss Designer have control of, construction means, methods, techniques, sequences, procedures, programs and safety in connection with the handling, storing, installation and bracing of the Trusses. These topics are covered in the BCSI 1-03: *Guide to Good Practice for Handling, Installing & Bracing of Metal Plate Connected Wood Trusses.* The Truss Manufacturer and Truss Designer are also not responsible for the failure to carry out the construction work related to the Trusses and the Structural Elements in accordance with the handling and installation information and/or the Structural Design Documents.

2.6.6 The Truss Manufacturer and Truss Designer shall not be responsible for the design, materials, or installation of permanent bracing for the Building, including bracing for all or any of the Trusses and Structural Elements. The approximate location for, or the maximum spacing between, permanent lateral bracing of Truss members will be indicated on the Truss Design and it shall be the responsibility of the Owner to engage the Building Designer or others to specify how the permanent lateral bracing is to be anchored or restrained to prevent lateral movement of all Truss members together. Consideration shall be given to one of the following methods for providing this restraint or anchorage: (a) permanent diagonal bracing in the plane of the Truss members; or (b) other means when demonstrated by the Building Designer or other qualified person to provide equivalent lateral resistance.

2.7 TRUSS MANUFACTURER RESPONSIBILITIES

2.7.1 The Truss Manufacturer shall communicate the truss design criteria and requirements from the Structural Design Documents and those requirements set forth in writing by the Owner, Building Designer or Contractor, to the Truss Designer.

2.7.2 A Truss Design Drawing is a substitute for the building code based prescriptive span tables used to select and apply structural elements in Conventional Light-frame Wood Construction.

2.7.3 The Truss Manufacturer shall supply a truss design drawing, a truss placement diagram or special detail drawings to the Contractor to document the location of special bearing conditions, permanent bracing, and orientation of trusses, unless the provisions of Section 2.7.3.1 are followed.

2.7.3.1 In lieu of a truss design drawing, truss placement diagram or special detail drawings being provided as specified in Section 2.7.2, the Truss Manufacturer shall ensure the following:

a) required bottom chord bearing parallel chord trusses shall be clearly marked or configured in a manner which will avoid inverted installation, and shall permit visual verification or proper orientation after installation;

b) trusses having bearing locations other than at the end or heel locations shall have bearing points clearly marked; and

c) truss chord and web members that require lateral bracing to prevent lateral buckling (such as, but not limited to, top chords of piggyback trusses, long compression webs, and bottom chords at cantilevers) shall be clearly marked to call attention to the need for such field bracing during and after installation.

2.7.3.2 Where required by Contract, Legal Requirements or the Local Building Official, the Truss Manufacturer shall provide Truss Design Drawing(s) sealed by a Truss Design Engineer (as defined in 2.8).

2.7.4 Where required by Contract, Legal Requirements or the Local Building Official, the Truss Manufacturer shall submit the Truss Submittals and Structural Element Submittals to the Local Building Official, Owner, Building Designer and/or Contractor for review and/or approval.

2.7.5 In preparing the Truss Submittals and the Structural Element Submittals, the Truss Manufacturer shall be permitted to rely on the accuracy and completeness of information furnished, in writing, by the Owner, Building Designer or Contractor, and by the Structural Design Documents.

2.7.6 The Truss Manufacturer shall manufacture the Trusses in accordance with the final Truss Design Drawings, using the quality criteria required by this standard (ANSI/TPI 1-2002).

2.7.7 Where required by the Contract, the Truss Manufacturer shall prepare the Truss Placement Diagram. The Truss Placement Diagram shall be permitted to include identifying marks for other products, including Structural Elements supplied by someone other than the Truss Manufacturer, so that they may be more easily identified by the Contractor during field erection. As the Truss Placement Diagram serves only as a guide for Truss installation and requires no engineering input, it does not require the seal of a Truss Design Engineer (as defined in 2.8).

2.7.8 The Truss Manufacturer shall determine the value for the quality control factor (C_q) to be used in the design of the metal plate connected wood trusses [see Section 6.4.11 (ANSI/TPI 1-2002)]. This value for C_q shall be provided to the Truss Designer, with evidence of conformance with Chapter 3 (ANSI/TPI 1-2002) from an inspection agency or other means when required by Section 6.4.11 (ANSI/TPI 1-2002).

2.8 TRUSS DESIGNER RESPONSIBILITIES

2.8.1 The Truss Designer shall prepare the Truss Design Drawings based on the truss design criteria and requirements set forth in writing by the Owner, Building Designer or Contractor, by the Structural Design Documents, and in conformance with the requirements set forth in this standard (ANSI/TPI 1-2002).

2.8.2 The Truss Designer shall be responsible for the single Truss design depicted on the Truss Design Drawing.

2.8.3 Repair designs shall be based on: Applicable wood engineering standards such as this standard, the *National Design Specification® for Wood Construction,* NDS® and other code recognized reports and standards; design loads specified in the Structural Design Documents, or otherwise specified in writing, and used in the preparation of the original Truss Design Drawing(s); the determination of forces and moments present at the repair location based on structural analysis; re-evaluation of all member stresses and deflections and joint designs (plating) for the repaired condition using this standard's (ANSI/TPI 1-2002) design criteria; and the judgment of the engineer undertaking the repair.

Copyright © 2003-2005
JobsiteCS 20050115

JOBSITE PACKAGE

IMPORTANT DOCUMENTS ENCLOSED

PLEASE REVIEW

WARNING: The handing, storing, installing and bracing of structural building components requires specialized training, clearly implemented procedures, and careful planning and communication among the contractor, all installation crews and any crane operators. Handling and installing components without appropriate training, planning and communication may result in property damage and/or serious bodily injury.

Prior to component installation, the documents should be examined and disseminated to all appropriate personnel, in addition to proper training and a clear understanding of the installation plan, any applicable fall protection requirements, and the intended bracing requirements.

Examine the structure, including the framing system, bearing locations, and related install installation locations and begin component installation only after any unsatisfactory conditions have been corrected. Do not cut, modify, or repair components and report any damage before installation.

The enclosed documents are offered as minimum guidelines only. Nothing contained in this jobsite package should be construed in any manner as expanding the scope of responsibility of, or imposing any additional liabilities on the component manufacturer.

ADVERTENCIA: El manejo, almacenamiento, instalación y soporte de componentes estructurales de construcción requieren capacitación especializada, procedimientos claramenta implementados y una planificación y comunicación cuidadosa entre el contratista, todo el personal de instalación y todos los operadores de grúas. Manejar e instalar componentes sin la capacitación, la planificación y la comunicación adecuadas puede ocasionar daños a la propiedad y/o graves lesiones corporales.

Antes de la instalación de componentes, los documentos adjuntos deben ser examinados y difundidos a todo el personal apropiado, además de la capacitación pertinente y un claro entendimiento del plan de instalación, de todo requisito aplicable de protección contra caídas y de los requisitos de soporte deseados.

Examine la estructura, inclusive el sistema de enrejado la ubicación de los apoyos e instalaciones correspondientes y comience la instalación de los componentes sólo después de haber corregido toda condición insatisfactoria. No corte, modifique ni repare componetes e informe cualquier daño descubierto antes de proceder a la instalación.

Los documentos adjuntos se ofrecen solamenta como pautas mínimas. Nada de lo incluido en este paquete para la obra debe interpretarse de manera que exceda el alcance de la responsabilidad del fabricante de componentes, ni en forma tal que imponga responsabilidades adicionales sobre éste.

NOTES: _____

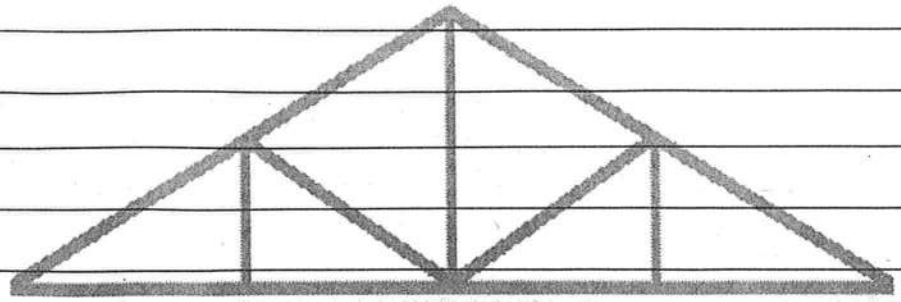

FOR TRUSS DESIGN RESPONSIBILITIES SEE REVERSE

The text appearing below has been reproduced from ANSI/TPI 1-2002, Chapter 2 with permission from the publisher, the Truss Plate Institute (TPI), www.tpinst.org. For information on design responsbi-lities contact your Truss Manufacturer or the Wood Truss Council of America (WTCA) at 608/274-4849 or www.woodtruss.com

2.6 CONSTRUCTION RELATED ITEMS

2.6.1 Truss Submittals and Structural Element Submittals, and any supplemental information provided by the Truss Manufacturer, shall be provided to the Contractor or the individual or organization responsible for the installation of the Trusses and Structural Elements.

2.6.2 The Building Designer shall be responsible for determining appropriate field storage, handling, and installation measures for the Trusses and Structural Elements. The Contractor, unless otherwise specifically assigned by Contract, shall determine the requirements of, and provide all materials for construction in accordance with the Structural Design Documents. These requirements and materials for construction shall include all necessary items for safe construction, including design and installation of, adequate temporary bracing during construction for the Building Structural System.

2.6.3 The Contractor shall be responsible, unless otherwise assigned by Contract, to review or inspect Trusses delivered or to review and inspect Trusses after erection for any problems, including dislodged/missing connectors, cracked, dislodged or broken members, or any other damage that may impair the structural integrity of the Truss. In the event that damage to the Truss is discovered that would likely impair the structural integrity of the Truss, the Contractor shall be responsible to ensure that the Truss not be erected and that any area within the Building supported by any such Truss already erected shall be appropriately shored or supported to prevent further damage from occurring and shall remain clear and free of any load imposed by people, plumbing, electrical, mechanical, bridging, bracing, etc. until such field repairs have been properly completed. In the event of such damage and unless otherwise specified by Contract, the Contractor shall contact the appropriate design professional to determine an adequate field repair and the Contractor shall be responsible to construct any such field repair.

2.6.4 All Truss repairs shall be approved in writing by a Building Designer or a Truss Designer or other qualified person prior to the performance of the repair.

2.6.5 The Truss Manufacturer and Truss Designer are not responsible for, nor do the Truss Manufacturer and Truss Designer have control of, construction means, methods, techniques, sequences, procedures, programs and safety in connection with the handling, storing, installation and bracing of the Trusses. These topics are covered in the BCSI 1-03: *Guide to Good Practice for Handling, Installing & Bracing of Metal Plate Connected Wood Trusses.* The Truss Manufacturer and Truss Designer are also not responsible for the failure to carry out the construction work related to the Trusses and the Structural Elements in accordance with the handling and installation information and/or the Structural Design Documents.

2.6.6 The Truss Manufacturer and Truss Designer shall not be responsible for the design, materials, or installation of permanent bracing for the Building, including bracing for all or any of the Trusses and Structural Elements. The approximate location for, or the maximum spacing between, permanent lateral bracing of Truss members will be indicated on the Truss Design and it shall be the responsibility of the Owner to engage the Building Designer or others to specify how the permanent lateral bracing is to be anchored or restrained to prevent lateral movement of all Truss members together. Consideration shall be given to one of the following methods for providing this restraint or anchorage: (a) permanent diagonal bracing in the plane of the Truss members; or (b) other means when demonstrated by the Building Designer or other qualified person to provide equivalent lateral resistance.

2.7 TRUSS MANUFACTURER RESPONSIBILITIES

2.7.1 The Truss Manufacturer shall communicate the truss design criteria and requirements from the Structural Design Documents and those requirements set forth in writing by the Owner, Building Designer or Contractor, to the Truss Designer.

2.7.2 A Truss Design Drawing is a substitute for the building code based prescriptive span tables used to select and apply structural elements in Conventional Light-frame Wood Construction.

2.7.3 The Truss Manufacturer shall supply a truss design drawing, a truss placement diagram or special detail drawings to the Contractor to document the location of special bearing conditions, permanent bracing, and orientation of trusses, unless the provisions of Section 2.7.3.1 are followed.

2.7.3.1 In lieu of a truss design drawing, truss placement diagram or special detail drawings being provided as specified in Section 2.7.2, the Truss Manufacturer shall ensure the following:

a) required bottom chord bearing parallel chord trusses shall be clearly marked or configured in a manner which will avoid inverted installation, and shall permit visual verification or proper orientation after installation;

b) trusses having bearing locations other than at the end or heel locations shall have bearing points clearly marked; and

c) truss chord and web members that require lateral bracing to prevent lateral buckling (such as, but not limited to, top chords of piggyback trusses, long compression webs, and bottom chords at cantilevers) shall be clearly marked to call attention to the need for such field bracing during and after installation.

2.7.3.2 Where required by Contract, Legal Requirements or the Local Building Official, the Truss Manufacturer shall provide Truss Design Drawing(s) sealed by a Truss Design Engineer (as defined in 2.8).

2.7.4 Where required by Contract, Legal Requirements or the Local Building Official, the Truss Manufacturer shall submit the Truss Submittals and Structural Element Submittals to the Local Building Official, Owner, Building Designer and/or Contractor for review and/or approval.

2.7.5 In preparing the Truss Submittals and the Structural Element Submittals, the Truss Manufacturer shall be permitted to rely on the accuracy and completeness of information furnished, in writing, by the Owner, Building Designer or Contractor, and by the Structural Design Documents.

2.7.6 The Truss Manufacturer shall manufacture the Trusses in accordance with the final Truss Design Drawings, using the quality criteria required by this standard (ANSI/TPI 1-2002).

2.7.7 Where required by the Contract, the Truss Manufacturer shall prepare the Truss Placement Diagram. The Truss Placement Diagram shall be permitted to include identifying marks for other products, including Structural Elements supplied by someone other than the Truss Manufacturer, so that they may be more easily identified by the Contractor during field erection. As the Truss Placement Diagram serves only as a guide for Truss installation and requires no engineering input, it does not require the seal of a Truss Design Engineer (as defined in 2.8).

2.7.8 The Truss Manufacturer shall determine the value for the quality control factor (C_q) to be used in the design of the metal plate connected wood trusses [see Section 6.4.11 (ANSI/TPI 1-2002)]. This value for C_q shall be provided to the Truss Designer, with evidence of conformance with Chapter 3 (ANSI/TPI 1-2002) from an inspection agency or other means when required by Section 6.4.11 (ANSI/TPI 1-2002).

2.8 TRUSS DESIGNER RESPONSIBILITIES

2.8.1 The Truss Designer shall prepare the Truss Design Drawings based on the truss design criteria and requirements set forth in writing by the Owner, Building Designer or Contractor, by the Structural Design Documents, and in conformance with the requirements set forth in this standard (ANSI/TPI 1-2002).

2.8.2 The Truss Designer shall be responsible for the single Truss design depicted on the Truss Design Drawing.

2.8.3 Repair designs shall be based on: Applicable wood engineering standards such as this standard, the *National Design Specification® for Wood Construction*, NDS® and other code recognized reports and standards; design loads specified in the Structural Design Documents, or otherwise specified in writing, and used in the preparation of the original Truss Design Drawing(s); the determination of forces and moments present at the repair location based on structural analysis; re-evaluation of all member stresses and deflections and joint designs (plating) for the repaired condition using this standard's (ANSI/TPI 1-2002) design criteria; and the judgment of the engineer undertaking the repair.

Copyright © 2003-2005
JobsiteCS 20050115

Anderson Truss Company

1730 N.W. Oakland Avenue Lake City, Florida 32055
Main Office:(386) 752-3103
Alt.Ph: - Fax:(386) 961-8290

SHIPPING TICKET

Job #: 8-092

Date: Monday, Aug 4 2008

Bill To:

Name: BRYAN ZECHER

Contact: BRYAN ZECHER

Address:

City, State, Zip:

Ship To:

Name: 1

Address:

Region: 116.53

City, State, Zip: Lot #22 The Oaks, 8611.18

Salesman: SHAWN ANDERSON

Designer: **

Notes:

Job#: 8-092 **SHIPPING TICKET**

Qty.	Span	Description	Truss	Slope TC/BC	Weight	Height	Loaded
6	35-06-00	A1 1 -Ply		7.00 2x4 / 2x4	201.40 lbs. 1208.39 lbs.	11-00-11	
4	10-08-00	C 1 -Ply		7.00 2x4 / 2x4	44.76 lbs. 179.02 lbs.	03-09-12	
1	08-00-00	M-2 1 -Ply	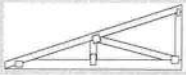	4.00 2x4 / 2x6	41.97 lbs. 41.97 lbs.	02-11-15	
1	08-03-08	M-3 1 -Ply	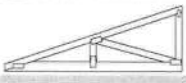	4.00 2x4 / 2x6	46.17 lbs. 46.17 lbs.	03-01-02	
5	08-03-08	M 1 -Ply		4.00 2x4 / 2x4	34.96 lbs. 174.82 lbs.	03-01-02	
5	08-00-00	M1 1 -Ply		4.00 2x4 / 2x4	32.17 lbs. 160.84 lbs.	02-11-15	
1	10-08-00	CGE 1 -Ply		7.00 2x4 / 2x4	48.95 lbs. 48.95 lbs.	03-05-12	
22	14-04-04	AP 1 -Ply		7.00 2x4 / 2x4	53.15 lbs. 1169.23 lbs.	04-00-08	
4	24-08-08	D1 1 -Ply	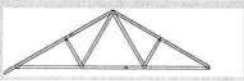	7.00 2x4 / 2x4	116.08 lbs. 464.34 lbs.	07-06-13	
4	24-08-08	D 1 -Ply	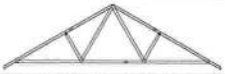	7.00 2x4 / 2x4	117.48 lbs. 469.93 lbs.	07-06-13	
1	24-08-08	DGE 1 -Ply		7.00 2x4 / 2x4	186.01 lbs. 186.01 lbs.	07-02-12	
5	45-06-00	B1 1 -Ply	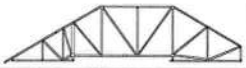	7.00 2x4 / 2x4	338.48 lbs. 1692.39 lbs.	10-11-11	
2	45-06-00	B2 1 -Ply	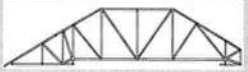	7.00 2x4 / 2x4	328.67 lbs. 657.34 lbs.	10-11-11	

Qty.	Span	Description	Truss	Slope TC/BC	Weight	Height	Loaded
6	06-09-08	EJ 1 -Ply		7.00 2x4 / 2x4	32.17 lbs. 193.01 lbs.	04-03-13	
1	10-03-00	L-1 1 -Ply	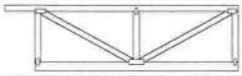	0.00 2x4 / 2x6	71.35 lbs. 71.35 lbs.	03-03-13	
1	06-09-08	EJG 1 -Ply		7.00 2x4 / 2x4	34.96 lbs. 34.96 lbs.	03-11-13	
1	45-06-00	B3 1 -Ply	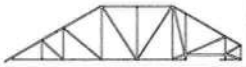	7.00 2x4 / 2x4	341.26 lbs. 341.26 lbs.	10-11-11	
1	45-04-08	B4 1 -Ply		7.00 2x4 / 2x4	309.09 lbs. 309.09 lbs.	10-11-11	
1	45-04-08	B5 1 -Ply		7.00 2x4 / 2x4	330.07 lbs. 330.07 lbs.	10-11-11	
3	45-04-08	B7 1 -Ply	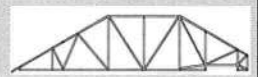	7.00 2x4 / 2x4	337.06 lbs. 1011.19 lbs.	10-11-11	
1	45-04-08	B6 1 -Ply		7.00 2x4 / 2x4	337.06 lbs. 337.06 lbs.	10-11-11	
1	45-04-08	B8 1 -Ply		7.00 2x4 / 2x4	310.49 lbs. 310.49 lbs.	10-11-11	
1	37-10-08	B9 1 -Ply		7.00 2x4 / 2x4	274.13 lbs. 274.13 lbs.	10-11-11	
1	24-08-08	E4 1 -Ply		7.00 2x4 / 2x4	176.22 lbs. 176.22 lbs.	07-11-05	
1	24-08-08	E3 1 -Ply	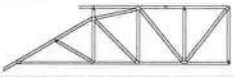	7.00 2x4 / 2x4	167.83 lbs. 167.83 lbs.	06-09-05	
1	24-08-08	E2 1 -Ply		7.00 2x4 / 2x4	137.06 lbs. 137.06 lbs.	06-04-13	
1	24-08-08	E1 1 -Ply	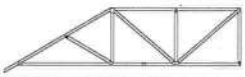	7.00 2x4 / 2x4	137.06 lbs. 137.06 lbs.	06-04-13	
1	45-06-00	B 1 -Ply	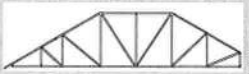	7.00 2x4 / 2x4	309.09 lbs. 309.09 lbs.	10-11-11	
1	35-06-00	AGE 1 -Ply		7.00 2x4 / 2x4	262.94 lbs. 262.94 lbs.	10-08-10	
1	37-10-08	B14 1 -Ply		7.00 2x4 / 2x4	272.73 lbs. 272.73 lbs.	10-11-11	
1	37-10-08	BGE1 1 -Ply	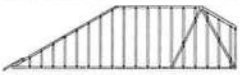	7.00 2x4 / 2x4	394.42 lbs. 394.42 lbs.	10-07-10	
3	14-04-05	AP1 1 -Ply		7.00 2x4 / 2x4	67.13 lbs. 201.40 lbs.	04-00-08	
3	37-07-00	B11 1 -Ply		7.00 2x10 / 2x4	283.18 lbs. 849.54 lbs.	10-11-11	
1	37-07-00	B12 1 -Ply	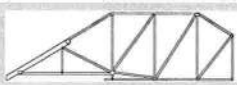	7.00 2x10 / 2x4	285.98 lbs. 285.98 lbs.	10-11-11	

Qty.	Span	Description	Truss	Slope TC/BC	Weight	Height	Loaded
1	37-07-00	B13 1 -Ply	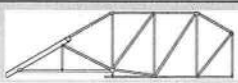	7.00 2x10 / 2x4	285.98 lbs. 285.98 lbs.	10-11-11	
1	37-07-00	B10 1 -Ply		7.00 2x10 / 2x4	285.98 lbs. 285.98 lbs.	10-11-11	
1	11-08-08	AP7 1 -Ply		7.00 2x4 / 2x4	61.54 lbs. 61.54 lbs.	06-05-10	
1	13-08-08	AP6 1 -Ply		7.00 2x4 / 2x4	58.74 lbs. 58.74 lbs.	07-07-10	
1	14-04-04	AP5 1 -Ply		7.00 2x4 / 2x4	74.13 lbs. 74.13 lbs.	08-00-02	
1	14-04-04	AP4 1 -Ply	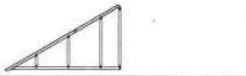	7.00 2x4 / 2x4	74.13 lbs. 74.13 lbs.	08-00-02	
1	15-06-07	AP2 1 -Ply		7.00 2x4 / 2x4	67.13 lbs. 67.13 lbs.	04-04-10	
1	16-10-01	AP3 1 -Ply		7.00 2x4 / 2x4	76.92 lbs. 76.92 lbs.	04-09-03	
1	37-08-08	EGE 1 -Ply		7.00 2x4 / 2x4	423.82 lbs. 423.82 lbs.	09-03-11	
1	45-06-00	BGE 1 -Ply		7.00 2x4 / 2x6	534.45 lbs. 534.45 lbs.	10-03-08	
1	08-00-00	MGE 1 -Ply	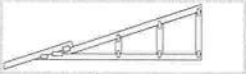	4.00 2x4 / 2x4	36.36 lbs. 36.36 lbs.	02-08-04	

Hanger Summary

SIMPSON Strong-Tie CONNECTIONS

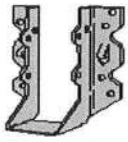

Qty	Part ID	Description
13	LUS24	LUS24
4	HUS26	HUS26

_____ ____/____/_____

Accepted By Date

TOP CHORD FILLER DETAIL

+ 2X4 CONTINUOUS LATERAL BRACING AT 24" OC MAXIMUM SPACING. ATTACH TO EACH TOP CHORD WITH (2) 16d NAILS. BRACING MATERIAL TO BE SUPPLIED AND ATTACHED AT BOTH ENDS TO A SUITABLE SUPPORT BY ERECTION CONTRACTOR.

++ 2X4 SO. PINE #2 N OR SPF #1/#2 FILLER TOP CHORD.

+++ 2X4 SO. PINE #3 OR SPF #1/#2 VERTICAL WEBS SPACED 48" OC MAXIMUM.

* 8/12 MAXIMUM PITCH.

** 2X8.25 PIGGYBACK SPECIAL PLATE. SEE DRAWING PIGBACKB0699 FOR PIGGYBACK SPECIAL PLATE INFORMATION.

*** 6'0" MAXIMUM HEIGHT.

† W2X4 OR 3X6 TRULOX.

†† REFER TO ENGINEER'S SEALED DESIGN REFERENCING THIS DETAIL FOR LUMBER, PLATES, AND OTHER INFORMATION NOT SHOWN.

11 GAUGE (0.120")X1.375" NAILS REQUIRED FOR TRULOX PLATE ATTACHMENT. NAILS SPECIFIED IN CIRCLES MUST BE APPLIED TO EACH FACE OF EACH TRUSS PLY. SEE DWG 160TL FOR NAILING AND TRULOX PLATE REQUIREMENTS.

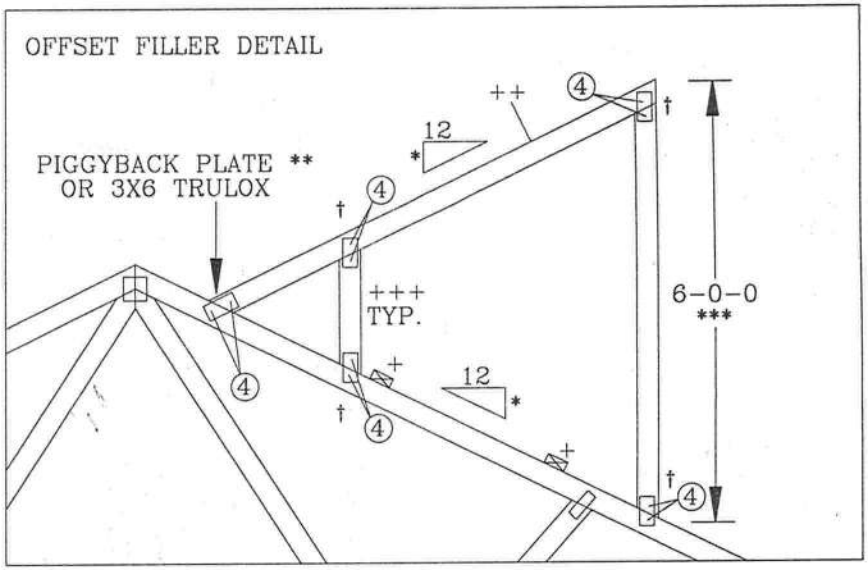

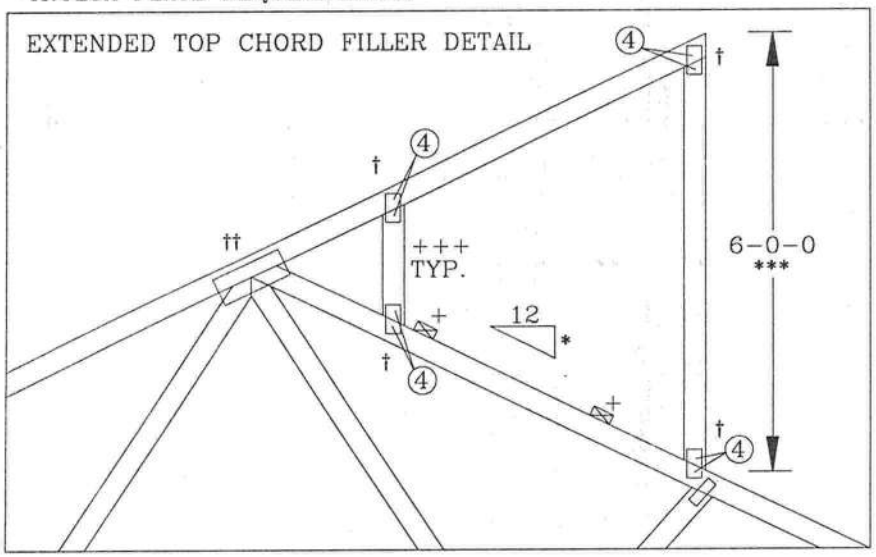

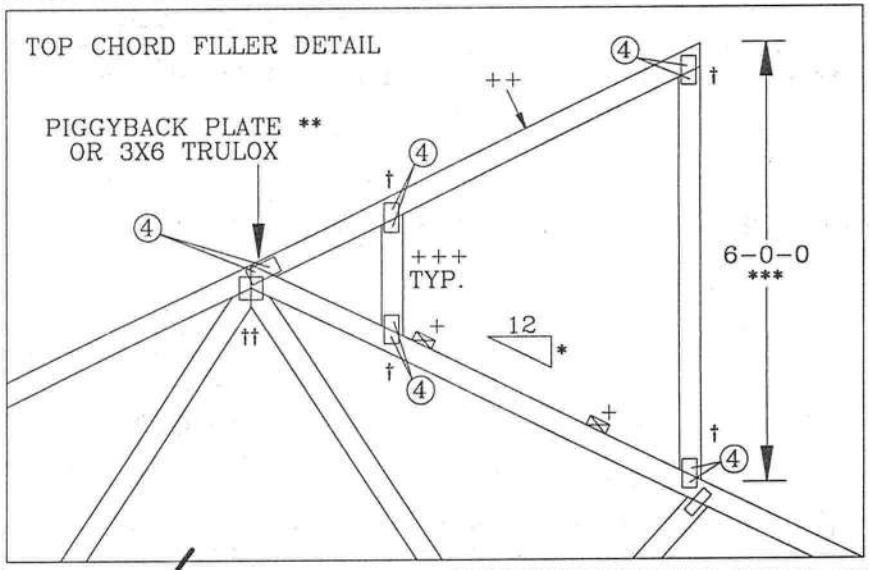

THIS DRAWING REPLACES DRAWING 884,080

ALPINE

ALPINE ENGINEERED PRODUCTS, INC.
POMPANO BEACH, FLORIDA

WARNING TRUSSES REQUIRE EXTREME CARE IN FABRICATING, HANDLING, SHIPPING, INSTALLING AND BRACING. REFER TO BCSI 1-03 (BUILDING COMPONENT SAFETY INFORMATION), PUBLISHED BY TPI (TRUSS PLATE INSTITUTE, 583 D'ONOFRIO DR., SUITE 200, MADISON, WI. 53719) AND WTCA (WOOD TRUSS COUNCIL OF AMERICA, 6300 ENTERPRISE LN, MADISON, WI 53719) FOR SAFETY PRACTICES PRIOR TO PERFORMING THESE FUNCTIONS. UNLESS OTHERWISE INDICATED, TOP CHORD SHALL HAVE PROPERLY ATTACHED STRUCTURAL PANELS AND BOTTOM CHORD SHALL HAVE A PROPERLY ATTACHED RIGID CEILING.

IMPORTANT FURNISH COPY OF THIS DESIGN TO INSTALLATION CONTRACTOR. ALPINE ENGINEERED PRODUCTS, INC., SHALL NOT BE RESPONSIBLE FOR ANY DEVIATION FROM THIS DESIGN; ANY FAILURE TO BUILD THE TRUSS IN CONFORMANCE WITH TPI; OR FABRICATING, HANDLING, SHIPPING, INSTALLING & BRACING OF TRUSSES. DESIGN CONFORMS WITH APPLICABLE PROVISIONS OF NDS (NATIONAL DESIGN SPEC. BY AF&PA) AND TPI. ALPINE CONNECTOR PLATES ARE MADE OF 20/18/16GA (W,H/S/K) ASTM A653 GRADE 40/60 (W,K/H,S) GALV. STEEL. APPLY PLATES TO EACH FACE OF TRUSS AND, UNLESS OTHERWISE LOCATED ON THIS DESIGN, POSITION PER DRAWINGS 160A-Z. ANY INSPECTION OF PLATES FOLLOWED BY (I) SHALL BE PER ANNEX A3 OF TPI 1-2002 SEC. 3. A SEAL ON THIS DRAWING INDICATES ACCEPTANCE OF PROFESSIONAL ENGINEERING RESPONSIBILITY SOLELY FOR THE TRUSS COMPONENT DESIGN SHOWN. THE SUITABILITY AND USE OF THIS COMPONENT FOR ANY BUILDING IS THE RESPONSIBILITY OF THE BUILDING DESIGNER, PER ANSI/TPI 1 SEC. 2.

ARTHUR R. FISHER
LICENSE
No. 59687
STATE OF
FLORIDA
PROFESSIONAL ENGINEER

TC LL	MAX 30	PSF
TC DL	MAX 15	PSF
BC DL	MAX 10	PSF
BC LL	0	PSF
TOT. LD.	MAX 55	PSF
DUR. FAC.	1.15 OR 1.33	
SPACING	24.0"	

REF	TC-FILLER
DATE	11/26/03
DRWG	TCFILLER1103
-ENG	SJP/KAR

BOTTOM CHORD FILLER DETAIL

* OPTIONAL INTERIOR OR CANTILEVER BEARING. MINIMUM PLATE SIZES (1X3 WAVE) MAY BE USED IF BEARING IS OMITTED. WEDGE OR VERTICAL MEMBER MUST COINCIDE WITH BEARING LOCATION.

11 GAUGE (0.120")X1.375" NAILS REQUIRED FOR TRULOX PLATE ATTACHMENT. NAILS SPECIFIED IN CIRCLES MUST BE APPLIED TO EACH FACE OF THE TRUSS. SEE DWG 160TL FOR NAILING AND TRULOX PLATE REQUIREMENTS.

\+ 3X4 WAVE OR 4X8 TRULOX

++ 2X4 WAVE OR 3X6 TRULOX

REFER TO ENGINEER'S SEALED DESIGN REFERENCING THIS DETAIL FOR LUMBER, PLATES, AND OTHER INFORMATION NOT SHOWN.

ALL TRULOX PLATES SHOWN ARE MINIMUMS. LARGER PLATES MAY BE REQUIRED TO ACCOMODATE REQUIRED NAILS (**)

FILLER BOTTOM CHORD OR WEDGE SPECIES	MAXIMUM REACTION		MINIMUM BEARING AREA	** REQUIRED NAILS PER FACE WITH TRULOX PLATES				
	DOWNWARD	UPLIFT		1.00 D.O.L.	1.15 D.O.L.	1.25 D.O.L.	1.33 D.O.L.	1.60 D.O.L.
DOUGLAS FIR-LARCH	3281#	1656#	1.5" X 3.5"	12	11	10	9	8
HEM-FIR	2126#	1095#	1.5" X 3.5"	9	8	7	7	6
SPRUCE-PINE-FIR	2231#	1192#	1.5" X 3.5"	10	9	8	8	6
SOUTHERN PINE DENSE	3465#	1791#	1.5" X 3.5"	12	11	10	9	8
SOUTHERN PINE	2966#	1492#	1.5" X 3.5"	10	9	8	8	7
SOUTHERN PINE NON-DENSE	2520#	1343#	1.5" X 3.5"	9	8	7	7	6

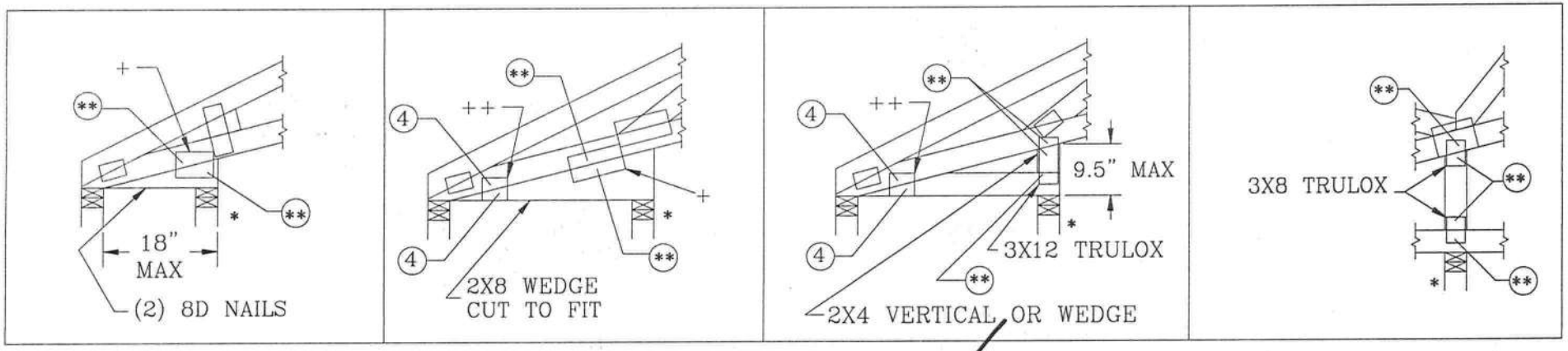

THIS DRAWING REPLACES DRAWINGS A115 A115/R & 884,132

ALPINE

ALPINE ENGINEERED PRODUCTS, INC.
POMPANO BEACH, FLORIDA

WARNING TRUSSES REQUIRE EXTREME CARE IN FABRICATING, HANDLING, SHIPPING, INSTALLING AND BRACING. REFER TO BCSI 1-03 (BUILDING COMPONENT SAFETY INFORMATION), PUBLISHED BY TPI (TRUSS PLATE INSTITUTE, 583 D'ONOFRIO DR., SUITE 200, MADISON, WI. 53719) AND WTCA (WOOD TRUSS COUNCIL OF AMERICA, 6300 ENTERPRISE LN, MADISON, WI 53719) FOR SAFETY PRACTICES PRIOR TO PERFORMING THESE FUNCTIONS. UNLESS OTHERWISE INDICATED, TOP CHORD SHALL HAVE PROPERLY ATTACHED STRUCTURAL PANELS AND BOTTOM CHORD SHALL HAVE A PROPERLY ATTACHED RIGID CEILING.

IMPORTANT FURNISH COPY OF THIS DESIGN TO INSTALLATION CONTRACTOR. ALPINE ENGINEERED PRODUCTS, INC., SHALL NOT BE RESPONSIBLE FOR ANY DEVIATION FROM THIS DESIGN; ANY FAILURE TO BUILD THE TRUSS IN CONFORMANCE WITH TPI; OR FABRICATING, HANDLING, SHIPPING, INSTALLING & BRACING OF TRUSSES. DESIGN CONFORMS WITH APPLICABLE PROVISIONS OF NDS (NATIONAL DESIGN SPEC. BY AF&PA) AND TPI. ALPINE CONNECTOR PLATES ARE MADE OF 20/18/16GA (W,H/S/K) ASTM A653 GRADE 40/60 (W,K/H,S) GALV. STEEL. APPLY PLATES TO EACH FACE OF TRUSS AND, UNLESS OTHERWISE LOCATED ON THIS DESIGN, POSITION PER DRAWINGS 160A-Z. ANY INSPECTION OF PLATES FOLLOWED BY (I) SHALL BE PER ANNEX A3 OF TPI 1-2002 SEC. 3. A SEAL ON THIS DRAWING INDICATES ACCEPTANCE OF PROFESSIONAL ENGINEERING RESPONSIBILITY SOLELY FOR THE TRUSS COMPONENT DESIGN SHOWN. THE SUITABILITY AND USE OF THIS COMPONENT FOR ANY BUILDING IS THE RESPONSIBILITY OF THE BUILDING DESIGNER, PER ANSI/TPI 1 SEC. 2.

ARTHUR R. FISHER LICENSE No. 59687 STATE OF FLORIDA PROFESSIONAL ENGINEER

Jan 06

TC LL	—	PSF
TC DL	—	PSF
BC DL	10.0	PSF
BC LL	—	PSF
TOT. LD.	—	PSF
DUR. FAC. 1.0/1.15/1.25/1.33		
SPACING	24.0"	

REF	BC FILLER
DATE	11/26/03
DRWG	BCFILLER1103
-ENG	DLJ/KAR

THIS DRAWING SPECIFIES REPAIRS FOR A TRUSS WITH CRACKED OR BROKEN WEBS.

THIS DESIGN IS VALID ONLY FOR SINGLE PLY TRUSSES WITH 2X4 #3, STUD, OR STANDARD CRACKED OR BROKEN WEBS. NO MORE THAN 1 CRACK OR BREAK PER WEB AND 2 CRACKED OR BROKEN WEBS PER TRUSS ARE ALLOWED. CONTACT THE TRUSS MANUFACTURER FOR ANY REPAIRS THAT DO NOT COMPLY WITH THIS DETAIL.

CRACKED OR BROKEN WEB REPAIR DETAIL

(B) = DAMAGED AREA, 0" MIN TO 12" MAX LENGTH OF CRACK OR BREAK IN WEB.

(S) = (2) 2X4 SCABS, SAME GRADE, SPECIES AS WEB MEMBER. MINIMUM LENGTH OF SCAB MUST BE THE GREATER OF:

1. 68" + LENGTH OF DAMAGED AREA (B), MINIMUM OF 34" ON BOTH SIDES OF THE DAMAGED AREA.

   OR

2. 80% OF THE ORIGINAL WEB LENGTH.

ATTACH ONE SCAB TO EACH FACE OF THE WEB WITH A DOUBLE ROW OF 10d COMMON NAILS SPACED 4" OC STAGGERED. REFER TO NAIL SPACING DETAIL FOR ADDITIONAL NAIL SPACING INFORMATION.

NOTE: FIELD REPAIRS MUST COMPLY WITH ALPINE DESIGNS AND SPECIFICATIONS.

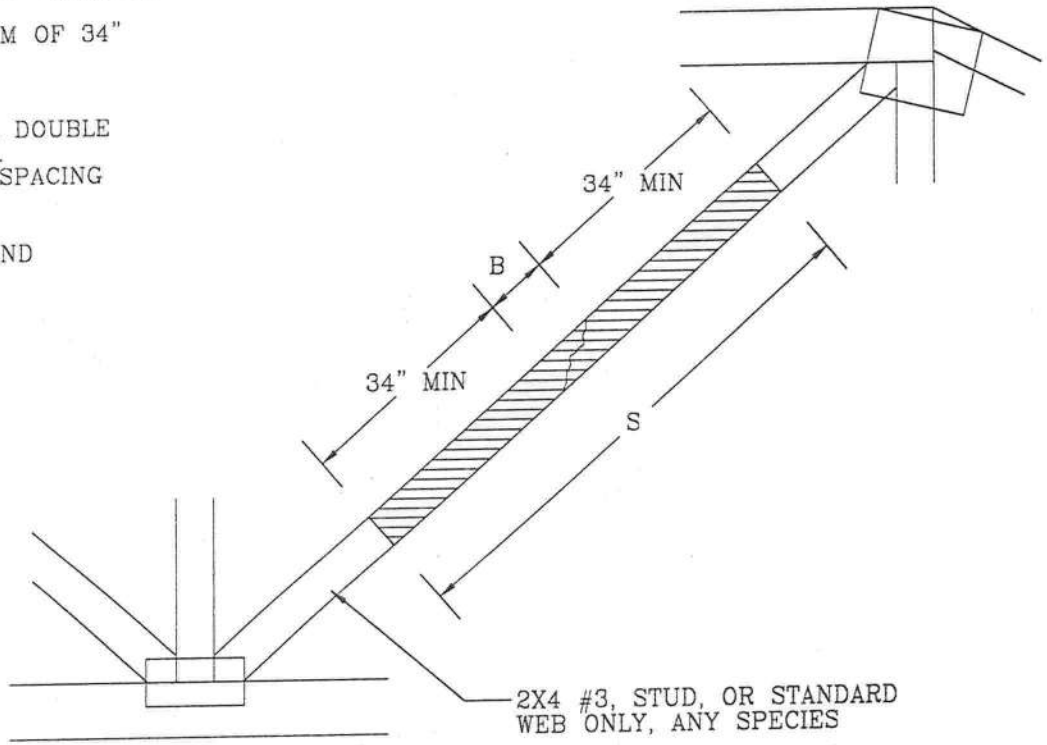

10d COMMON (0.148" x 3") NAILS:
DOUBLE ROW, STAGGERED

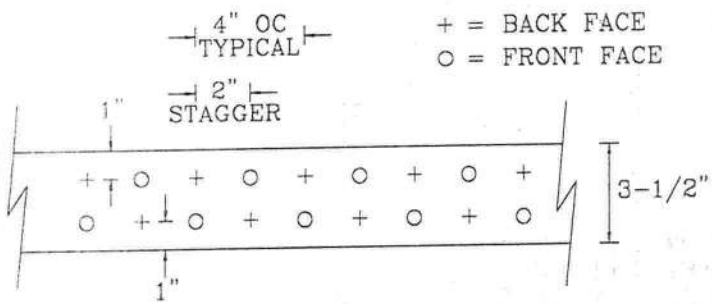

NAIL SPACING DETAIL

THIS DRAWING REPLACES DRAWINGS HC25094073 & 958,849

ALPINE

ALPINE ENGINEERED PRODUCTS, INC.
POMPANO BEACH, FLORIDA

TRUSS REPAIR

DAMAGED TRUSSES MUST BE CAREFULLY EVALUATED TO DETERMINE THE EXTENT OF DAMAGE AND THE FEASIBILITY OF REPAIR. IN SOME CASES THE PRUDENT SOLUTION IS TO SCRAP THE DAMAGED TRUSSES AND REBUILD. INTERNAL WOOD FIBER DAMAGE AND EXCESS CONNECTOR STRESS FROM BENDING OR SHOCK CANNOT BE READILY DETECTED. THEREFORE, IT IS VITAL THAT THE TRUSS FABRICATOR AND BUILDING CONTRACTOR CONSIDER THE CAUSE OF THE DAMAGE IN THEIR DECISION WHETHER TO REPAIR OR REBUILD.

REPAIR WORK SHOWN ON THIS DRAWING APPLIES ONLY TO THOSE SECTIONS OF THE TRUSS REPORTED BY THE TRUSS MANUFACTURER TO HAVE BEEN DAMAGED. A QUALIFIED THIRD PARTY INSPECTOR SHALL CHECK TRUSSES TO DETERMINE THE EXTENT OF ANY FURTHER DAMAGE, IF ANY, AND VERIFY THAT REPAIRS HAVE BEEN PERFORMED AS INDICATED ON THIS DRAWING.

SPACING 24.0"

REF	WEB REPAIR
DATE	11/26/03
DRWG	REPWEBSC1103
-ENG	MLH/KAR

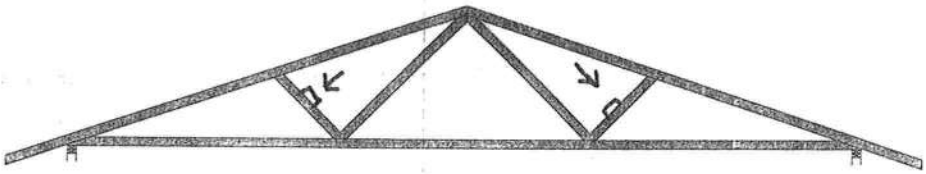

Continuous Lateral Brace

1 x 4 #3 Hem-Pir or better continuous lateral bracing to be equally spaced. Attach with (2) Od nails. Bracing material to be supplied and attached at both ends to a suitable support by erection conractor.

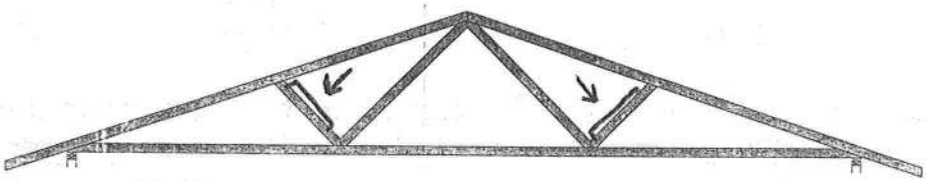

T-Brace

1 x 4 "T" Brace. Same grade as web member. Attach with 8d nails at 6" o.c. Bracing material to be supplied by erection contractor.

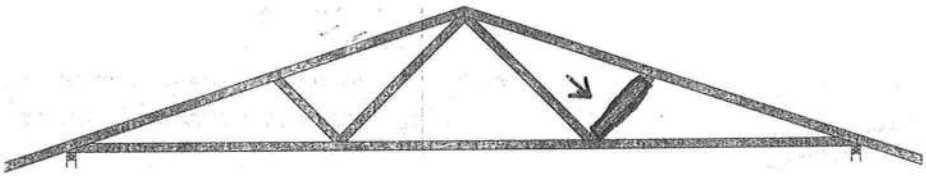

Scab Brace

Scab brace, same size, grade and length as web member. Attach with 16d nails at 4" o.c. Bracing material to be supplied by erection contractor.

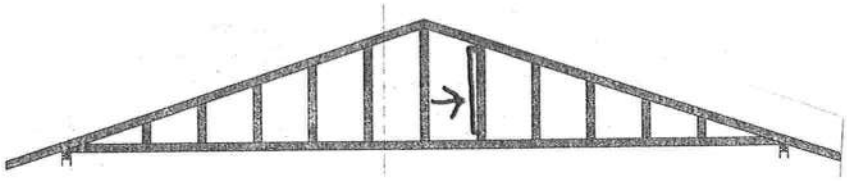

L-Brace

1 x 4 "L" Brace. Same grade as web member. Attach with 8d nails at 6" o.c. Bracing material to be supplied by erection contractor.

JOBSITE PACKAGE

IMPORTANT DOCUMENTS ENCLOSED

PLEASE REVIEW

WARNING: The handing, storing, installing and bracing of structural building components requires specialized training, clearly implemented procedures, and careful planning and communication among the contractor, all installation crews and any crane operators. Handling and installing components without appropriate training, planning and communication may result in property damage and/or serious bodily injury.

Prior to component installation, the documents should be examined and disseminated to all appropriate personnel, in addition to proper training and a clear understanding of the installation plan, any applicable fall protection requirements, and the intended bracing requirements.

Examine the structure, including the framing system, bearing locations, and related install installation locations and begin component installation only after any unsatisfactory conditions have been corrected. Do not cut, modify, or repair components and report any damage before installation.

The enclosed documents are offered as minimum guidelines only. Nothing contained in this jobsite package should be construed in any manner as expanding the scope of responsibility of, or imposing any additional liabilities on the component manufacturer.

ADVERTENCIA: El manejo, almacenamiento, instalación y soporte de componentes estructurales de construcción requieren capacitación especializada, procedimientos claramenta implementados y una planificación y comunicación cuidadosa entre el contratista, todo el personal de instalación y todos los operadores de grúas. Manejar e instalar componentes sin la capacitación, la planificación y la comunicación adecuadas puede ocasionar daños a la propiedad y/o graves lesiones corporales.

Antes de la instalación de componentes, los documentos adjuntos deben ser examinados y difundidos a todo el personal apropiado, además de la capacitación pertinente y un claro entendimiento del plan de instalación, de todo requisito aplicable de protección contra caídas y de los requisitos de soporte deseados.

Examine la estructura, inclusive el sistema de enrejado la ubicación de los apoyos e instalaciones correspondientes y comience la instalación de los componentes sólo después de haber corregido toda condición insatisfactoria. No corte, modifique ni repare componetes e informe cualquier daño descubierto antes de proceder a la instalación.

Los documentos adjuntos se ofrecen solamenta como pautas mínimas. Nada de lo incluido en este paquete para la obra debe interpretarse de manera que exceda el alcance de la responsabilidad del fabricante de componentes, ni en forma tal que imponga responsabilidades adicionales sobre éste.

NOTES: _____

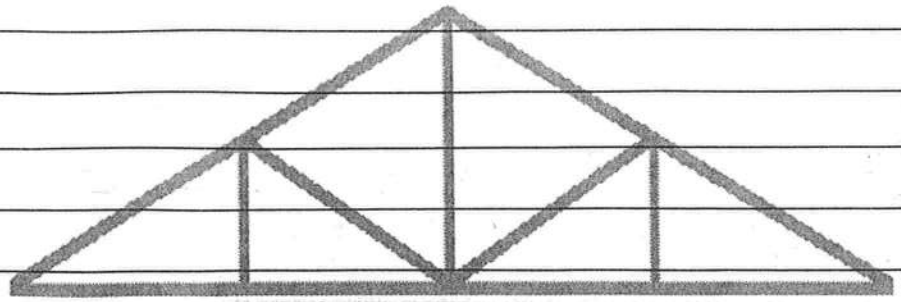

FOR TRUSS DESIGN RESPONSIBILITIES SEE REVERSE

TOP CHORD FILLER DETAIL

+ 2X4 CONTINUOUS LATERAL BRACING AT 24" OC MAXIMUM SPACING. ATTACH TO EACH TOP CHORD WITH (2) 16d NAILS. BRACING MATERIAL TO BE SUPPLIED AND ATTACHED AT BOTH ENDS TO A SUITABLE SUPPORT BY ERECTION CONTRACTOR.

++ 2X4 SO. PINE #2 N OR SPF #1/#2 FILLER TOP CHORD.

+++ 2X4 SO. PINE #3 OR SPF #1/#2 VERTICAL WEBS SPACED 48" OC MAXIMUM.

* 8/12 MAXIMUM PITCH.

** 2X8.25 PIGGYBACK SPECIAL PLATE. SEE DRAWING PIGBACKB0699 FOR PIGGYBACK SPECIAL PLATE INFORMATION.

*** 6'0" MAXIMUM HEIGHT.

† W2X4 OR 3X6 TRULOX.

†† REFER TO ENGINEER'S SEALED DESIGN REFERENCING THIS DETAIL FOR LUMBER, PLATES, AND OTHER INFORMATION NOT SHOWN.

11 GAUGE (0.120")X1.375" NAILS REQUIRED FOR TRULOX PLATE ATTACHMENT. NAILS SPECIFIED IN CIRCLES MUST BE APPLIED TO EACH FACE OF EACH TRUSS PLY. SEE DWG 160TL FOR NAILING AND TRULOX PLATE REQUIREMENTS.

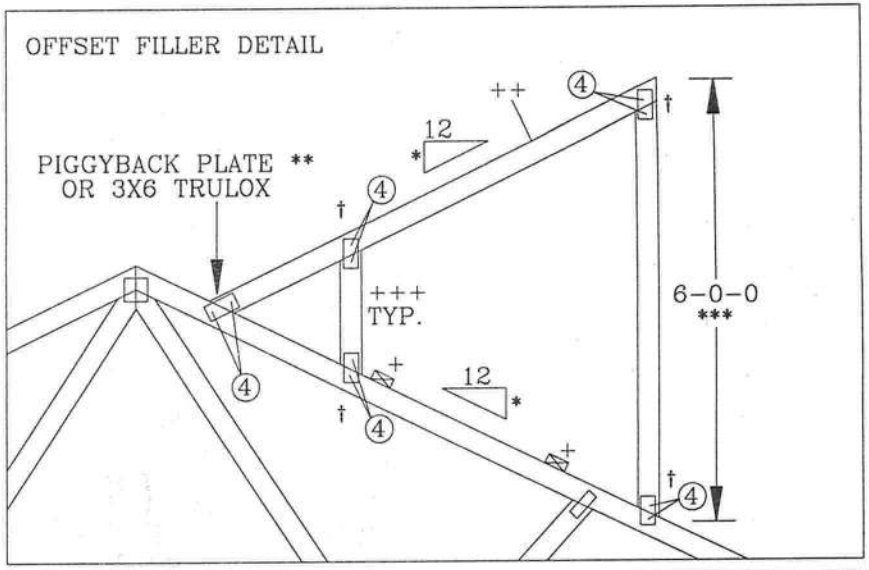

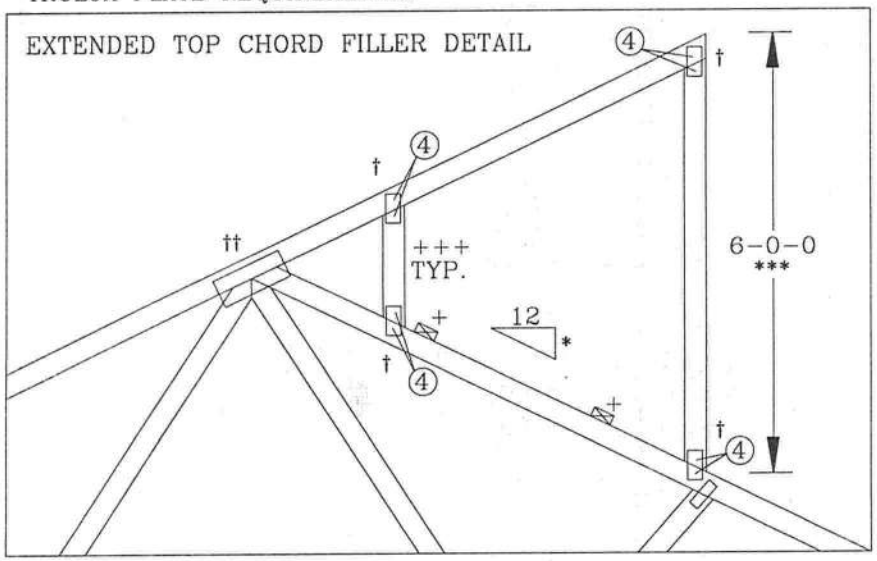

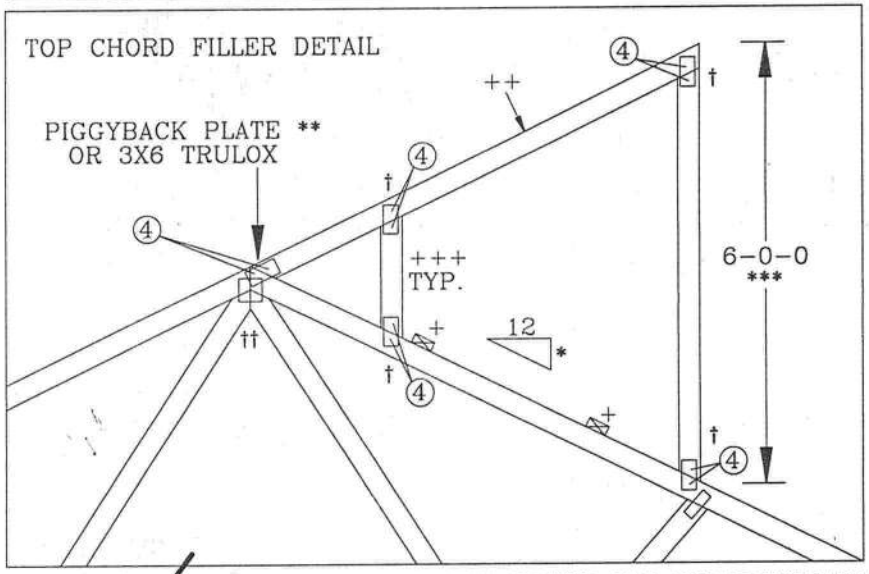

THIS DRAWING REPLACES DRAWING 884,080

ALPINE

ALPINE ENGINEERED PRODUCTS, INC.
POMPANO BEACH, FLORIDA

WARNING TRUSSES REQUIRE EXTREME CARE IN FABRICATING, HANDLING, SHIPPING, INSTALLING AND BRACING. REFER TO BCSI 1-03 (BUILDING COMPONENT SAFETY INFORMATION), PUBLISHED BY TPI (TRUSS PLATE INSTITUTE, 583 D'ONOFRIO DR., SUITE 200, MADISON, WI. 53719) AND WTCA (WOOD TRUSS COUNCIL OF AMERICA, 6300 ENTERPRISE LN, MADISON, WI 53719) FOR SAFETY PRACTICES PRIOR TO PERFORMING THESE FUNCTIONS. UNLESS OTHERWISE INDICATED, TOP CHORD SHALL HAVE PROPERLY ATTACHED STRUCTURAL PANELS AND BOTTOM CHORD SHALL HAVE A PROPERLY ATTACHED RIGID CEILING.

IMPORTANT FURNISH COPY OF THIS DESIGN TO INSTALLATION CONTRACTOR. ALPINE ENGINEERED PRODUCTS, INC., SHALL NOT BE RESPONSIBLE FOR ANY DEVIATION FROM THIS DESIGN; ANY FAILURE TO BUILD THE TRUSS IN CONFORMANCE WITH TPI; OR FABRICATING, HANDLING, SHIPPING, INSTALLING & BRACING OF TRUSSES. DESIGN CONFORMS WITH APPLICABLE PROVISIONS OF NDS (NATIONAL DESIGN SPEC. BY AF&PA) AND TPI. ALPINE CONNECTOR PLATES ARE MADE OF 20/18/16GA (W,H/S/K) ASTM A653 GRADE 40/60 (W,K/H,S) GALV. STEEL. APPLY PLATES TO EACH FACE OF TRUSS AND, UNLESS OTHERWISE LOCATED ON THIS DESIGN, POSITION PER DRAWINGS 160A-Z. ANY INSPECTION OF PLATES FOLLOWED BY (I) SHALL BE PER ANNEX A3 OF TPI 1-2002 SEC. 3. A SEAL ON THIS DRAWING INDICATES ACCEPTANCE OF PROFESSIONAL ENGINEERING RESPONSIBILITY SOLELY FOR THE TRUSS COMPONENT DESIGN SHOWN. THE SUITABILITY AND USE OF THIS COMPONENT FOR ANY BUILDING IS THE RESPONSIBILITY OF THE BUILDING DESIGNER, PER ANSI/TPI 1 SEC. 2.

ARTHUR R. FISHER
LICENSE
No. 59687
STATE OF
FLORIDA
PROFESSIONAL ENGINEER

TC LL	MAX 30	PSF
TC DL	MAX 15	PSF
BC DL	MAX 10	PSF
BC LL	0	PSF
TOT. LD.	MAX 55	PSF
DUR. FAC.	1.15 OR 1.33	
SPACING	24.0"	

REF	TC-FILLER
DATE	11/26/03
DRWG	TCFILLER1103
-ENG	SJP/KAR

BOTTOM CHORD FILLER DETAIL

* OPTIONAL INTERIOR OR CANTILEVER BEARING. MINIMUM PLATE SIZES (1X3 WAVE) MAY BE USED IF BEARING IS OMITTED. WEDGE OR VERTICAL MEMBER MUST COINCIDE WITH BEARING LOCATION.

11 GAUGE (0.120")X1.375" NAILS REQUIRED FOR TRULOX PLATE ATTACHMENT. NAILS SPECIFIED IN CIRCLES MUST BE APPLIED TO EACH FACE OF THE TRUSS. SEE DWG 160TL FOR NAILING AND TRULOX PLATE REQUIREMENTS.

\+ 3X4 WAVE OR 4X8 TRULOX

++ 2X4 WAVE OR 3X6 TRULOX

REFER TO ENGINEER'S SEALED DESIGN REFERENCING THIS DETAIL FOR LUMBER, PLATES, AND OTHER INFORMATION NOT SHOWN.

ALL TRULOX PLATES SHOWN ARE MINIMUMS. LARGER PLATES MAY BE REQUIRED TO ACCOMODATE REQUIRED NAILS (**)

FILLER BOTTOM CHORD OR WEDGE SPECIES	MAXIMUM REACTION		MINIMUM BEARING AREA	** REQUIRED NAILS PER FACE WITH TRULOX PLATES				
	DOWNWARD	UPLIFT		1.00 D.O.L.	1.15 D.O.L.	1.25 D.O.L.	1.33 D.O.L.	1.60 D.O.L.
DOUGLAS FIR-LARCH	3281#	1656#	1.5" X 3.5"	12	11	10	9	8
HEM-FIR	2126#	1095#	1.5" X 3.5"	9	8	7	7	6
SPRUCE-PINE-FIR	2231#	1192#	1.5" X 3.5"	10	9	8	8	6
SOUTHERN PINE DENSE	3465#	1791#	1.5" X 3.5"	12	11	10	9	8
SOUTHERN PINE	2966#	1492#	1.5" X 3.5"	10	9	8	8	7
SOUTHERN PINE NON-DENSE	2520#	1343#	1.5" X 3.5"	9	8	7	7	6

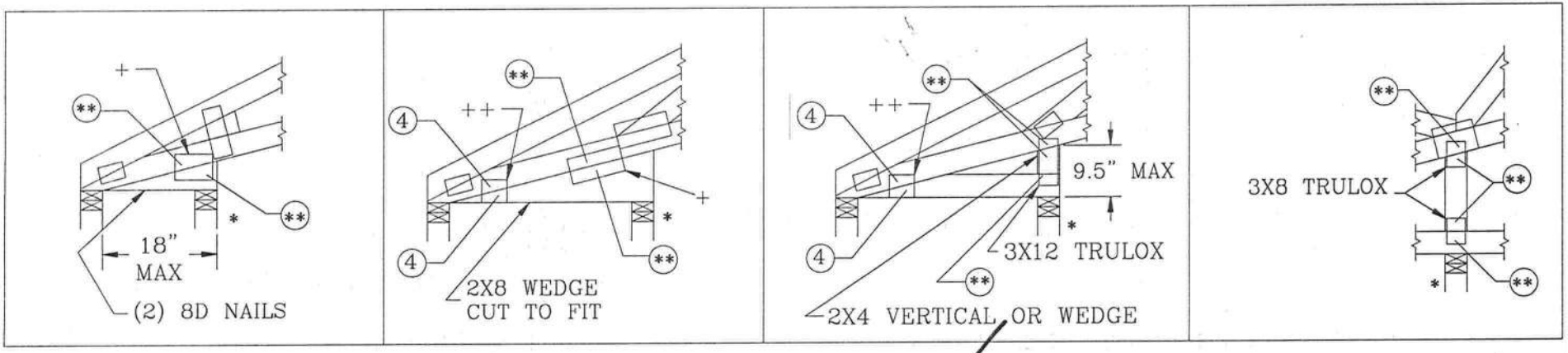

THIS DRAWING REPLACES DRAWINGS A115 A115/R & 884,132

ALPINE

ALPINE ENGINEERED PRODUCTS, INC.
POMPANO BEACH, FLORIDA

WARNING TRUSSES REQUIRE EXTREME CARE IN FABRICATING, HANDLING, SHIPPING, INSTALLING AND BRACING. REFER TO BCSI 1-03 (BUILDING COMPONENT SAFETY INFORMATION), PUBLISHED BY TPI (TRUSS PLATE INSTITUTE, 583 D'ONOFRIO DR., SUITE 200, MADISON, WI. 53719) AND WTCA (WOOD TRUSS COUNCIL OF AMERICA, 6300 ENTERPRISE LN, MADISON, WI 53719) FOR SAFETY PRACTICES PRIOR TO PERFORMING THESE FUNCTIONS. UNLESS OTHERWISE INDICATED, TOP CHORD SHALL HAVE PROPERLY ATTACHED STRUCTURAL PANELS AND BOTTOM CHORD SHALL HAVE A PROPERLY ATTACHED RIGID CEILING.

IMPORTANT FURNISH COPY OF THIS DESIGN TO INSTALLATION CONTRACTOR. ALPINE ENGINEERED PRODUCTS, INC., SHALL NOT BE RESPONSIBLE FOR ANY DEVIATION FROM THIS DESIGN; ANY FAILURE TO BUILD THE TRUSS IN CONFORMANCE WITH TPI; OR FABRICATING, HANDLING, SHIPPING, INSTALLING & BRACING OF TRUSSES. DESIGN CONFORMS WITH APPLICABLE PROVISIONS OF NDS (NATIONAL DESIGN SPEC, BY AF&PA) AND TPI. ALPINE CONNECTOR PLATES ARE MADE OF 20/18/16GA (W,H/S/K) ASTM A653 GRADE 40/60 (W,K/H,S) GALV. STEEL. APPLY PLATES TO EACH FACE OF TRUSS AND, UNLESS OTHERWISE LOCATED ON THIS DESIGN, POSITION PER DRAWINGS 160A-Z. ANY INSPECTION OF PLATES FOLLOWED BY (I) SHALL BE PER ANNEX A3 OF TPI 1-2002 SEC. 3. A SEAL ON THIS DRAWING INDICATES ACCEPTANCE OF PROFESSIONAL ENGINEERING RESPONSIBILITY SOLELY FOR THE TRUSS COMPONENT DESIGN SHOWN. THE SUITABILITY AND USE OF THIS COMPONENT FOR ANY BUILDING IS THE RESPONSIBILITY OF THE BUILDING DESIGNER, PER ANSI/TPI 1 SEC. 2.

ARTHUR R. FISHER LICENSE No. 59687 STATE OF FLORIDA PROFESSIONAL ENGINEER

Jan 06

TC LL	—	PSF
TC DL	—	PSF
BC DL	10.0	PSF
BC LL	—	PSF
TOT. LD.	—	PSF
DUR. FAC. 1.0/1.15/1.25/1.33		
SPACING 24.0"		

REF	BC FILLER
DATE	11/26/03
DRWG	BCFILLER1103
-ENG	DLJ/KAR

THIS DRAWING SPECIFIES REPAIRS FOR A TRUSS WITH CRACKED OR BROKEN WEBS.

THIS DESIGN IS VALID ONLY FOR SINGLE PLY TRUSSES WITH 2X4 #3, STUD, OR STANDARD CRACKED OR BROKEN WEBS. NO MORE THAN 1 CRACK OR BREAK PER WEB AND 2 CRACKED OR BROKEN WEBS PER TRUSS ARE ALLOWED. CONTACT THE TRUSS MANUFACTURER FOR ANY REPAIRS THAT DO NOT COMPLY WITH THIS DETAIL.

(B) = DAMAGED AREA, 0" MIN TO 12" MAX LENGTH OF CRACK OR BREAK IN WEB.

(S) = (2) 2X4 SCABS, SAME GRADE, SPECIES AS WEB MEMBER. MINIMUM LENGTH OF SCAB MUST BE THE GREATER OF:

1. 68" + LENGTH OF DAMAGED AREA (B), MINIMUM OF 34" ON BOTH SIDES OF THE DAMAGED AREA.

   OR

2. 80% OF THE ORIGINAL WEB LENGTH.

ATTACH ONE SCAB TO EACH FACE OF THE WEB WITH A DOUBLE ROW OF 10d COMMON NAILS SPACED 4" OC STAGGERED. REFER TO NAIL SPACING DETAIL FOR ADDITIONAL NAIL SPACING INFORMATION.

NOTE: FIELD REPAIRS MUST COMPLY WITH ALPINE DESIGNS AND SPECIFICATIONS.

CRACKED OR BROKEN WEB REPAIR DETAIL

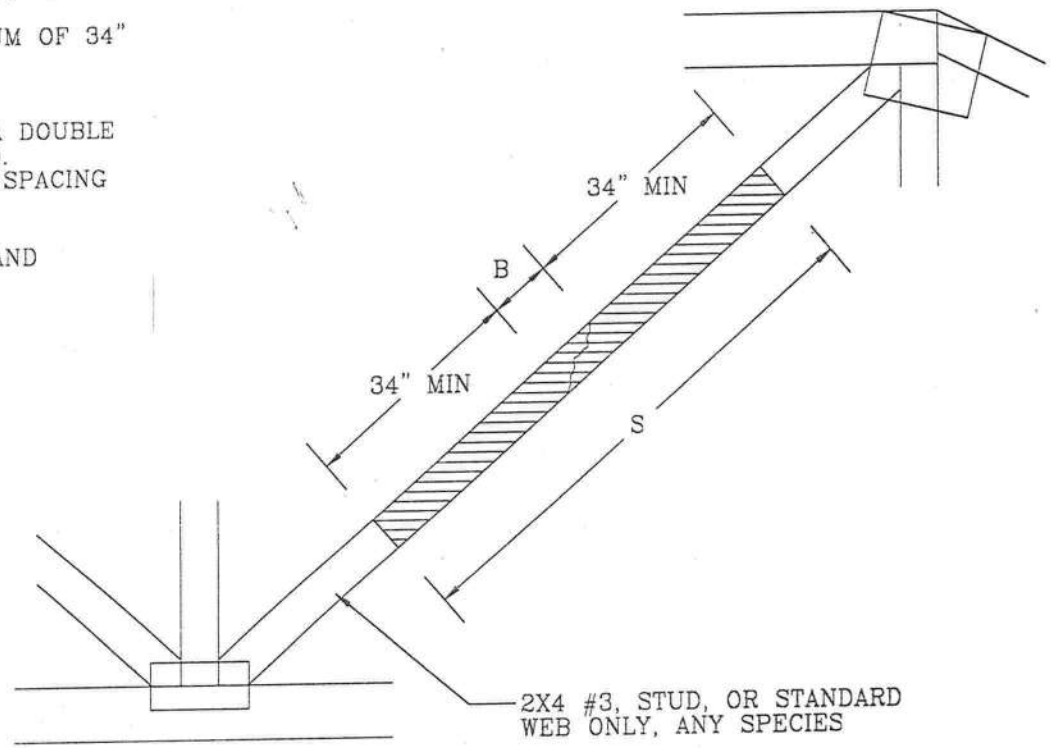

10d COMMON (0.148" x 3") NAILS: DOUBLE ROW, STAGGERED

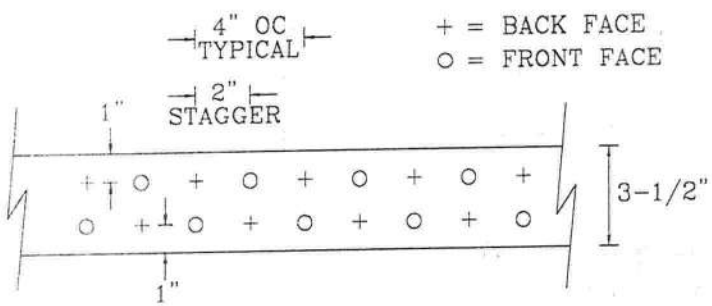

NAIL SPACING DETAIL

THIS DRAWING REPLACES DRAWINGS HC25094073 & 958,849

ALPINE

ALPINE ENGINEERED PRODUCTS, INC.
POMPANO BEACH, FLORIDA

TRUSS REPAIR

DAMAGED TRUSSES MUST BE CAREFULLY EVALUATED TO DETERMINE THE EXTENT OF DAMAGE AND THE FEASIBILITY OF REPAIR. IN SOME CASES THE PRUDENT SOLUTION IS TO SCRAP THE DAMAGED TRUSSES AND REBUILD. INTERNAL WOOD FIBER DAMAGE AND EXCESS CONNECTOR STRESS FROM BENDING OR SHOCK CANNOT BE READILY DETECTED. THEREFORE, IT IS VITAL THAT THE TRUSS FABRICATOR AND BUILDING CONTRACTOR CONSIDER THE CAUSE OF THE DAMAGE IN THEIR DECISION WHETHER TO REPAIR OR REBUILD.

REPAIR WORK SHOWN ON THIS DRAWING APPLIES ONLY TO THOSE SECTIONS OF THE TRUSS REPORTED BY THE TRUSS MANUFACTURER TO HAVE BEEN DAMAGED. A QUALIFIED THIRD PARTY INSPECTOR SHALL CHECK TRUSSES TO DETERMINE THE EXTENT OF ANY FURTHER DAMAGE, IF ANY, AND VERIFY THAT REPAIRS HAVE BEEN PERFORMED AS INDICATED ON THIS DRAWING.

SPACING 24.0"

REF	WEB REPAIR
DATE	11/26/03
DRWG	REPWEBSC1103
-ENG	MLH/KAR

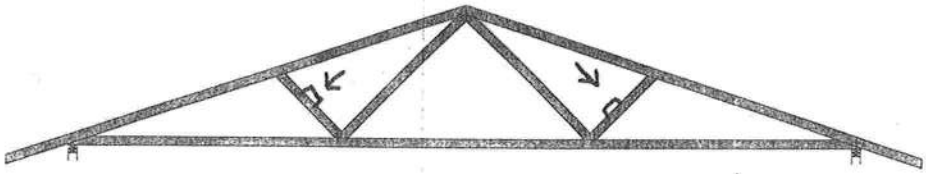

Continuous Lateral Brace

1 x 4 #3 Hem-Pir or better continuous lateral bracing to be equally spaced. Attach with (2) Od nails. Bracing material to be supplied and attached at both ends to a suitable support by erection conractor.

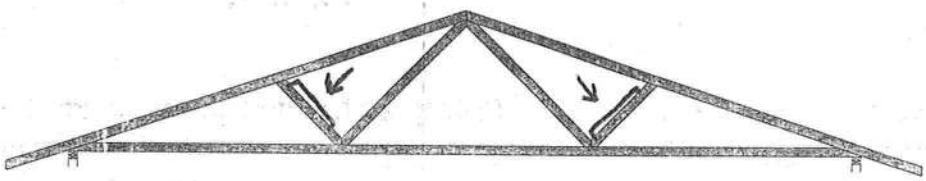

T-Brace

1 x 4 "T" Brace. Same grade as web member. Attach with 8d nails at 6" o.c. Bracing material to be supplied by erection contractor.

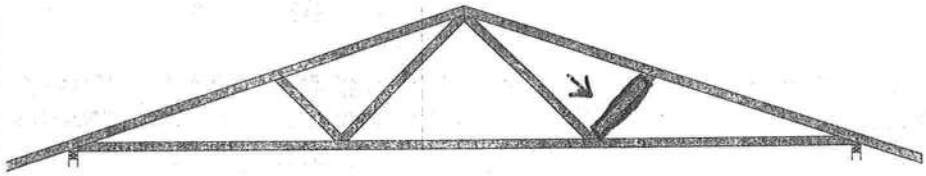

Scab Brace

Scab brace, same size, grade and length as web member. Attach with 16d nails at 4" o.c. Bracing material to be supplied by erection contractor.

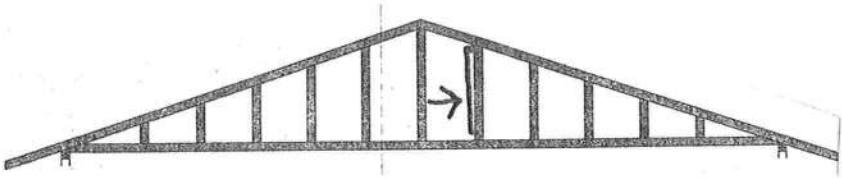

L-Brace

1 x 4 "L" Brace. Same grade as web member. Attach with 8d nails at 6" o.c. Bracing material to be supplied by erection contractor.

L-1	10.25	3.50	WALL	9.958	10.000	1029		-160
EJG	6.79	36.00	WALL	0.292	9.000	819		-551
EJG	6.79	42.00	WALL	3.292	10.000	397		-411
MGE	8.00	96.00	WALL	0.000	10.000	1380		-679
AP	14.35	6.95	WALL	0.000	20.975	110	-169	-140
AP	14.35	151.48	WALL	0.865	21.121	1264		-497
AP	14.35	6.95	WALL	13.774	20.975	91	-169	-94
AP1	14.36	6.95	WALL	0.000	20.974	49		-48
AP1	14.36	151.54	WALL	0.865	21.120	908		-320
AP1	14.36	6.95	WALL	13.778	20.974	9		-1
AP7	11.71	6.95	WALL	0.000	16.943	26		
AP7	11.71	130.11	WALL	0.865	17.089	741		
AP6	13.71	6.95	WALL	0.000	15.776	224	-170	-129
AP6	13.71	154.11	WALL	0.865	15.922	1071		-476
AP5	14.35	6.95	WALL	0.000	15.398	3		
AP5	14.35	161.88	WALL	0.865	15.544	942		
AP4	14.35	6.95	WALL	0.000	15.398	3		
AP4	14.35	161.88	WALL	0.865	15.544	942		
AP2	15.54	6.95	WALL	0.000	20.630	57	-5	-58
AP2	15.54	165.68	WALL	0.865	20.776	1015		-362
AP2	15.54	6.95	WALL	14.957	20.630	8	-5	-7
AP3	16.84	6.95	WALL	0.000	18.646	56		-53
AP3	16.84	181.30	WALL	0.865	18.792	1052		-326
AP3	16.84	6.95	WALL	16.259	18.646	20		-7

HANGER SUMMARY FOR: 8-092//Zecher-Lot 22 The Oaks

Quantity	Hanger
4	HUS26
13	LUS24

HANGER DETAIL FOR: 8-092

Quantity	Hanger

```
==============================================================================
  4      HUS26
        {3} B11
        {1} M-2
-------------------------------------------------------
  13     LUS24
        {8} C
        {5} M1
-------------------------------------------------------
```

JobKey: 8-092//Zecher-Lot 22 The Oaks
Company: Anderson Truss Company
Address: 1730 N.W. Oakland Avenue
Lake City, Florida 32055
Phone: (386) 752-3103
Site Address:
,**_

SUPPORT REPORT JOB DESCRIPTION: 8-092
WIND CODE: ASCE 7-02 WIND MPH: 110 BLDG TYPE: CLOSED

TRUSS DESC	TRUSS SPAN-ft	SUPPORT SIZE-in.	SUPPORT TYPE	BEARING XLOC-ft.	BEARING YLOC-ft.	REACT. MAX.+#	REACT. MAX.-#	MAX WIND UPLFT.-#
A1	35.50	3.50	WALL	0.000	10.000	1578	-145	
A1	35.50	3.50	WALL	35.208	10.000	1578	-145	
AGE	35.50	422.50	WALL	0.000	10.000	6696	-1095	
AGE	35.50	3.50	WALL	35.208	10.000	512	-10	
B9	37.88	3.50	WALL	0.000	10.000	280	8	
B9	37.88	4.95	WALL	5.458	10.000	1644	-181	
B9	37.88	3.50	WALL	37.583	10.000	1327	-139	
B14	37.88	3.50	WALL	0.000	10.000	1678	-146	
B14	37.88	3.50	WALL	37.583	10.000	1573	-166	
BGE1	37.88	3.50	WALL	0.000	10.000	317	-12	
BGE1	37.88	328.00	WALL	0.292	10.000	6989	-882	
BGE1	37.88	3.50	WALL	37.583	10.000	1082	-98	
B11	37.58	3.50	WALL	0.000	10.000	1575	-128	
B11	37.58	3.00	HUS26	37.333	10.000	1550	-169	
B12	37.58	3.50	WALL	0.000	10.000	1587	-130	
B12	37.58	3.50	WALL	37.583	10.000	1563	-169	
B13	37.58	3.50	WALL	0.000	10.000	1587	-130	
B13	37.58	3.50	WALL	37.583	10.000	1563	-169	
B10	37.58	3.50	WALL	0.000	10.000	1587	-130	
B10	37.58	3.50	WALL	37.583	10.000	1563	-169	

B1	45.50	3.50	WALL	0.000	10.000	351	-26
B1	45.50	3.50	WALL	10.000	10.000	2116	-210
B1	45.50	3.50	WALL	45.208	10.000	1418	-130
B2	45.50	3.50	WALL	0.000	10.000	436	-36
B2	45.50	3.50	WALL	10.000	10.000	1866	-185
B2	45.50	3.50	WALL	42.208	10.000	1583	-129
B3	45.50	3.50	WALL	0.000	10.000	485	-40
B3	45.50	3.50	WALL	10.000	10.000	1793	-180
B3	45.50	3.50	WALL	42.208	10.000	1607	-130
B4	45.38	3.50	WALL	0.000	10.000	463	-37
B4	45.38	3.50	WALL	10.000	10.000	1950	-195
B4	45.38	2.00	WALL	45.208	10.000	1455	-134
B5	45.38	3.50	WALL	0.000	10.000	394	-19
B5	45.38	4.95	WALL	8.667	10.000	1980	-211
B5	45.38	2.00	WALL	45.208	10.000	1501	-134
B7	45.38	3.50	WALL	0.000	10.000	350	-29
B7	45.38	3.50	WALL	6.500	10.000	1921	-188
B7	45.38	2.00	WALL	45.208	10.000	1603	-148
B6	45.38	3.50	WALL	0.000	10.000	386	-34
B6	45.38	4.95	WALL	6.667	10.000	1890	-183
B6	45.38	2.00	WALL	45.208	10.000	1599	-148
B8	45.38	3.50	WALL	0.000	10.000	366	-31
B8	45.38	3.50	WALL	6.500	10.000	1903	-185
B8	45.38	2.00	WALL	45.208	10.000	1606	-150
B	45.50	3.50	WALL	0.000	10.000	466	-37
B	45.50	3.50	WALL	10.000	10.000	1959	-196
B	45.50	3.50	WALL	45.208	10.000	1459	-134
BGE	45.50	123.00	WALL	0.000	10.000	6008	-708
BGE	45.50	3.50	WALL	45.208	10.000	3746	-373
C	10.67	3.00	LUS24	0.000	10.000	443	-36
C	10.67	3.00	LUS24	10.417	10.000	443	-36
CGE	10.67	60.30	WALL	0.000	10.000	693	-368
CGE	10.67	67.70	WALL	5.025	10.000	966	-343

D1	24.71	3.50	WALL	0.000	9.000	1133	-103
D1	24.71	3.50	WALL	24.417	9.000	1024	-83
D	24.71	3.50	WALL	0.000	9.000	1129	-102
D	24.71	3.50	WALL	24.417	9.000	1129	-102
DGE	24.71	3.50	WALL	0.000	9.000	348	-378
DGE	24.71	84.00	WALL	0.292	9.000	2081	-287
DGE	24.71	87.50	WALL	17.417	9.000	2332	-348
E4	24.71	3.50	WALL	0.000	9.000	1138	-106
E4	24.71	3.50	WALL	24.417	9.000	1017	-112
E3	24.71	3.50	WALL	0.000	9.000	1138	-106
E3	24.71	3.50	WALL	24.417	9.000	1017	-112
E2	24.71	3.50	WALL	0.000	9.000	1139	-93
E2	24.71	3.50	WALL	24.417	9.000	1017	-119
E1	24.71	3.50	WALL	0.000	9.000	1139	-93
E1	24.71	3.50	WALL	24.417	9.000	1017	-119
EGE	37.71	3.50	WALL	0.000	9.000	2255	-118
EGE	37.71	3.50	WALL	24.417	9.000	23	9
EGE	37.71	156.00	WALL	24.708	10.000	5672	-566
M-2	8.00	3.50	WALL	0.000	10.000	1001	-89
M-2	8.00	3.00	HUS26	7.750	10.000	1422	-123
M-3	8.29	3.50	WALL	0.000	10.000	1052	-94
M-3	8.29	3.50	WALL	8.000	10.000	1394	-121
M	8.29	3.50	WALL	0.000	10.000	451	-43
M	8.29	3.50	WALL	8.000	10.000	319	-42
M1	8.00	3.50	WALL	0.000	10.000	439	-42
M1	8.00	3.00	LUS24	7.750	10.000	307	-40
EJ	6.79	3.50	WALL	0.000	9.000	407	-16
EJ	6.79	1.50	NAILED	6.792	10.000	172	-21
EJ	6.79	1.50	NAILED	6.792	13.029	91	-27
L-1	10.25	3.50	WALL	0.000	10.000	1613	-1016