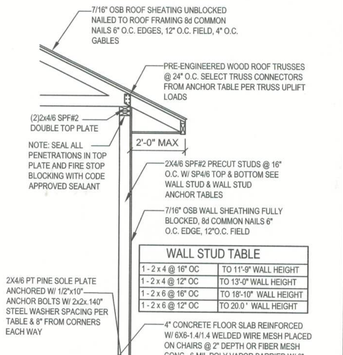

WALL STUD TABLE	
1 - 2 x 4 @ 16" OC	TO 11'-9" WALL HEIGHT
1 - 2 x 4 @ 12" OC	TO 13'-0" WALL HEIGHT
1 - 2 x 6 @ 16" OC	TO 18'-10" WALL HEIGHT
1 - 2 x 6 @ 12" OC	TO 20.0 ' WALL HEIGHT

STUD ANCHOR TABLE			
TYPICAL TRUSS UPLIFT & MAX 10'-0" WALL HIGHT	ANCHOR BOLT SPACING	SP4 / SP6 SPACING	ALTERNATE SP4/SP#6 SPACING
770 LB	48" O.C.	48" O.C.	N/A
950 LB	48" O.C.	32" O.C.	N/A
1270 LB	32" O.C.	16" O.C.	32" O.C.
1500 LB	24" O.C.	16" O.C.	16" O.C.
2200 LB	LTT01 W/ 5/8" X 7" WEDGE ANCHOR	N/A	(2) HTS20 NAILED TO STUD PACK
NOTE: SP2 TOP & SP1 BOTTOM ALTERNATE FOR SP4/6			
NOTE: MINIMUM ANCHOR BOLT SPACING FOR WALLS WITH A HEIGHT GREATER THAN 10'-0" AND LESS THAN 14'-0" SHALL BE 32" O.C.			

W1 - SINGLE STORY EXT. WALL SECTION

SCALE: 1/2"=1'-0" REV-22-AUG-03

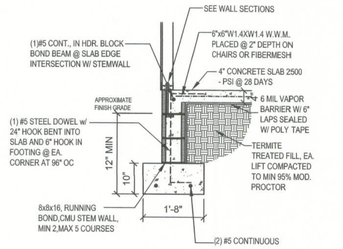

F1 - STEM WALL FOUNDATION

SCALE: 1/2"=1'-0" REV-27-MAY-03

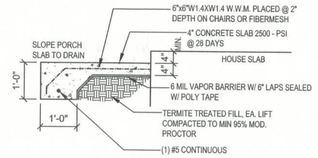

F2 - PORCH SLAB

SCALE: 1/2"=1'-0" REV-22-AUG-03

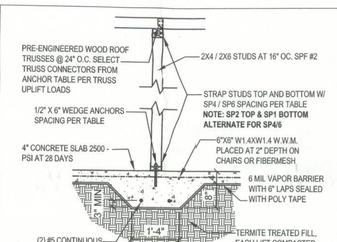

TYPICAL TRUSS UPLIFT	WEDGE ANCHOR SPACING	SP4 / SP6 SPACING	TRUSS CONNECTOR
400 LB	48" O.C.	48" O.C.	H2.5A
600 LB	48" O.C.	32" O.C.	H10
1000 LB	32" O.C.	16" O.C.	HTS20
2200 LB	LTT01 W/ 5/8" X 7" WEDGE ANCHOR	N/A	(2) HTS20 NAILED TO STUD PACK

F4 - INTERIOR BEARING FOOTING

SCALE: 1/2"=1'-0" REV-22-AUG-03

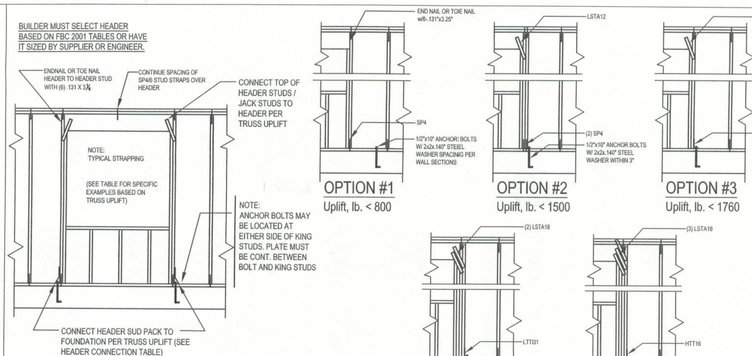

Load Bearing Header Sizing Methods (BY BUILDER)
1. Determine header size from FBC 2001, Tables 2308.3 A, B, & C, or 2308.5.
2. Use supplier published data or Southern pine span tables.
3. For engineered lumber beams have suppliers engineer size beam.

Jack Studs and King Studs (BY BUILDER)
4. Lookup jack studs from FBC 2001, Tables 2308.3 A, B, & C, or 2308.5.
5. Use one jack stud for every 3000 lb vertical load.
6. Total king plus jack studs = studs needed to be there if no opening was there.

Header Uplift Connections (BY BUILDER)
7. Calculate the uplift at each end of the header by summing the moments of all truss up
dividing by the length of the header.
8. Select header connections from table below or mfg. catalog to connect header to truss
connection) and stud to foundation (bottom connection).

Option #	Uplift, lb.	Top Connector		Bottom Connector	
#1	< 800	End nail or toe nail w/6- 131"X3.25"		SP4, 6-10dx1½"	690
#2	< 1500	LSTA12, 10-10d	755	(2) SP4, 6-10dx1½", ½"x10" AB	1380
#3	< 1760	LSTA18, 14-10d	1055	LTT20B, 10-16d ½" AB	1760
#4	< 2500	(2) LSTA18, 14-10d	2110	LTT01, 18-10d ⅝"x10" AB	2185
#5	< 3885	(3) LSTA18, 14-10d	3480	HTT16, 18-16d, ⅝"x10" AB	4175

Uplift greater than 3885 lb requires engineering design

FBC2001, TABLE 2308.3A		Building Width / Truss Span (ft				
Header Spans For Exterior Bearing Walls Supporting Roof+Ceiling (20psf+20psf)	Header Spans (ft-in)	20		28		
		Span	NJ	Span	NJ	Sp
NOTES: NJ = Number of jack studs required to support each end. Building width is measured perpendicular to the ridge. For widths between those shown, spans may be interpolated. Spans are based on uniform loads on header.	2-2x4	3-8	1	3-2	1	2-1
	2-2x6	5-5	1	4-8	1	4-2
	2-2x8	6-10	1	5-11	2	5-4
	2-2x10	8-5	2	7-3	2	6-6
	2-2x12	9-9	2	8-5	2	7-6
	3-2x8	8-4	1	7-5	1	6-8
	3-2x10	10-6	1	9-1	2	8-2
	3-2x12	12-2	2	10-7	2	9-5
	4-2x8	9-2	1	8-4	1	7-6
	4-2x10	11-8	1	10-6	1	9-5
	4-2x12	14-1	1	12-2	2	10-1

W13-TYPICAL HEADER SIZING & STRAPING DETAIL

SCALE: N.T.S. REV 22-AUG-03

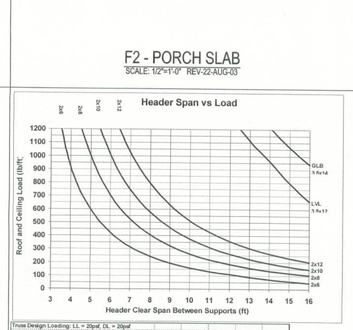

Truss Design Loading: LL = 20psf, DL = 20psf			
2" Jack Truss		220	Half of 7' truss span + 24" overhang
Porch width, 8'		240	Half of 8' truss span + 24" overhang
Garage width, 20'		460	Half of 20' truss span + 24" overhang
Garage width, 24'		500	Half of 24' truss span + 24" overhang
Main house width, 32'		720	Half of 32' truss span + 24" overhang
Main house width, 40'		880	Half of 40' truss span + 24" overhang
Main house width, 60'		1280	Half of 60' truss span + 24" overhang
Bonus Room, above garage		1025	Half of 24' truss span and 14' bonus room

Notes:
1. Deflection limits: TL=L/240, LL=L/180.
2. Duration factor, Cd = 1.25, applied to Fb and Fv. (No increase to E or Fc⊥ for duration of load.)
3. 2x headers are SYP#2 with OSB 8inch spacer and (2) 12x85 19"OC (strength increased 5% for OSB)
4. 3.5" x 14" GLB is Anthony Power Header, 2600 Fb, 1.9 E, or GP (2) 1.75x14 LVL, 2850 Fb, 2.0 E
5. 3.5" x 12" LVL is Blue Line - GP Lam, (2) 1.75" x 11.78" LVL, 2900 Fb, 2.0 E, 286 Fv
6. Minimum bearing for SYP header, Fc = 565psi, 2500 lb per jack stud. (For SPF plate, Fc = 425psi, 2200 lb per
7. Shear strength is increased 50% for minimal splits and checks headers cut to size on site.
8. Deflection has not been adjusted for creep due to long term loading, Kcr = 1.0
9. The chart is based on NDS2001 bending, horizontal shear, and deflection requirements.
10. Chart is for uniform loads only.
11. (For non-uniform loads sum the loads on the header, divide by header span, and multiply by 2.)

W71 - HEADER SPANS FOR ROOF/CEILING LOAD

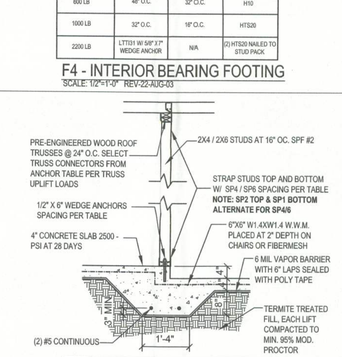

TYPICAL TRUSS UPLIFT	WEDGE ANCHOR SPACING	SP4 / SP6 SPACING	TRUSS CONNECTOR
400 LB	48" O.C.	48" O.C.	H2.5A
600 LB	48" O.C.	32" O.C.	H10
1000 LB	32" O.C.	16" O.C.	HTS20
2200 LB	LTT01 W/ 5/8" X 7" WEDGE ANCHOR	N/A	(2) HTS20 NAILED TO STUD PACK

F5 - INTERIOR BEARING STEP FOOTING

SCALE: 1/2"=1'-0" REV-22-AUG-03

N2-GENERAL NOTES:

FOUNDATION: FOR POINT LOADS GRATER THAN 5000 lb OR REPETITIVE TRUSS LOADS GRATER TH
2000 lb PER TRUSS PROVIDE A THICKENED SLAB OR PAD FOOTING 1'-0"D X 1 sq ft. FOR EVERY 100
BEARING REINFORCE WITH #5 @ 6" O.C. EACH WAY

CONCRETE: MINIMUM COMPRESSIVE STRENGTH OF CONCRETE AT 28 DAYS SHALL BE F'c = 3000 P
WHERE EXCESS WATER IS ADDED TO THE CONCRETE SO THAT ITS SERVICABILITY IS DEGRADED,
ATTAINMENT OF REQUIRED STRENGTH SHALL NOT RELEASE THE CONTRACTOR FROM PROVIDING
MODIFICATIONS AS MAY BE REQUIRED BY THE ENGINEER TO PROVIDE A SERVICEABLE MEMBER C
SURFACE. ALL CONCRETE SHALL BE VIBRATED. NO REPAIR OR RUBBING OF CONCRETE SURFACE
SHALL BE MADE PRIOR TO INSPECTION BY AND APPROVAL OF THE ENGINEER, OWNER OR HIS
REPRESENTATIVE.

WELDED WIRE REINFORCED SLAB: 6" x 6" W1.4 x W1.4, FB = 85KSI, WELDED WIRE REINFORCEMEN
FABRIC (W.W.M.) CONFORMING TO ASTM A185; LOCATED IN MIDDLE OF THE SLAB; SUPPORTED WI
APPROVED MATERIALS OR SUPPORTS AT SPACINGS NOT TO EXCEED 3'.

FIBER CONCRETE SLAB: CONCRETE SLABS ON GROUND CONTAINING SYNTHETIC FIBER
REINFORCEMENT. FIBER LENGTHS SHALL BE 1/2 INCH TO 2 INCHES IN LENGTH. DOSAGE AMOUNT
SHALL BE FROM 0.75 TO 1.5 POUNDS PER CUBIC YARD IN ACCORDANCE WITH THE MANUFACTURE
RECOMMENDATIONS. SYNTHETIC FIBERS SHALL COMPLY WITH ASTM C 1116. THE MANUFACTURE
SUPPLIER SHALL PROVIDE CERTIFICATION OF COMPLIANCE WITH ASTM C 1116 WHEN REQUESTED
THE BUILDING OFFICIAL.

CONTROL JOINTS: WHERE SPECIFIED, SAWN CONTROL JOINTS IN SLAB-ON-GRADE SHALL BE CUT
ACCORDANCE WITH ACI 302. JOINTS SHALL BE CUT WITHIN 12 HOURS OF SLAB PLACEMENT. THE L
/ WIDTH RATIOS OF SLAB AREAS SHALL NOT EXCEED 1.5 AND TYPICAL SPACING OF CUTS TO BE 12
NOT CUT WWM OR REINFORCING STEEL. (RECOMMENDED LOCATION OF CONTROL JOINTS IS SUBJ
TO OWNER AND CONTRACTOR'S APPROVAL. THE CONTROL JOINTS ARE NOT INTENDED TO PREVE
CRACKS BUT RATHER TO ENCOURAGE THE SLAB TO CRACK ON A GIVEN LINE.)

REBAR: ASTM A 615, GRADE 60, DEFORMED BARS, FY = 60 KSI. ALL LAPS SPLICES 48 * db (30" FOR
BARS); UNO. ALL REINFORCEMENT SHALL BE DETAILED AND PLACED IN ACCORDANCE WITH ACI 3
WITH ACI 315-96 UNLESS NOTED OTHERWISE. ALL TENSION DEVELOPMENT LENGTHS SHALL BE 30
INCHES.

STRUCTURAL CONNECTORS: MANUFACTURERS AND PRODUCT NUMBER FOR CONNECTORS, ANCH
AND REINFORCEMENT ARE LISTED FOR EXAMPLE NOT ENDORSEMENT. AN EQUIVALENT DEVICE O
SAME OR OTHER MANUFACTURER CAN BE SUBSTITUTED FOR ANY DEVICES LISTED IN THE EXAMP
TABLES AS LONG AS IT MEETS THE REQUIRED LOAD CAPACITIES. MANUFACTURER'S INSTALLATION
INSTRUCTIONS MUST BE FOLLOWED TO ACHIEVE RATED LOADS.

ANCHOR BOLTS: A-307 ANCHOR BOLTS WITH MINIMUM EMBEDMENT AS SPECIFIED IN DRAWINGS B
LESS THAN 7" IN CONCRETE OR REINFORCED BOND BEAM OR 15" IN GROUTED CMU.

WASHERS: WASHERS USED WITH 1/2" BOLTS TO BE 2" x 2" x 9/64"; WITH 5/8" BOLTS TO BE 3" x 3" x 0
WITH 3/4" BOLTS TO BE 3" x 3" x 9/64"; WITH 7/8" BOLTS TO BE 3" x 3" x 5/16", NO.

NAILS: ALL NAILS ARE COMMON NAILS UNLESS OTHERWISE SPECIFIED OR ACCEPTED BY FBC TES
REPORTS AS HAVING EQUAL STRUCTURAL VALUES.

REV-27-J

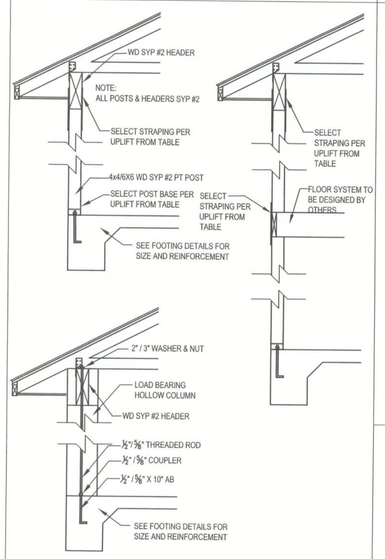

SYP #2 PT WD POSTS			
TYPICAL POST UPLIFT	POST BASE ANCHOR	BETWEEN FLOOR STRAPING	HEADER STRAPING
555 LB	ABA44 W/ (6)-10d & ½" AB	(2) LSTA21 W/ (8)-10d EA.	(2) LSTA21 W/ (8)-10d EA.
720 LB	ABA66 W/ (8)-16d & ⅝" AB	(2) LSTA21 W/ (8)-10d EA.	(2) LSTA21 W/ (8)-10d EA.
2200 LB	ABU44 W/ (12)-16d, (2)⅝" BOLTS & ⅝"AB	(2) LSTA21 W/ (18)-10d EA.	(2) LSTA21 W/ (18)-10d EA.
2300 LB	ABU66 W/ (12)-16d, (2)⅝" BOLTS & ⅝"AB	(2) LSTA21 W/ (18)-10d EA.	(2) LSTA21 W/ (18)-10d EA.
HOLLOW COLUMN			
1500 LB	½" X 10" AB ATTACHED TO ½" THREADED ROD WITH ½" COUPLER THRU COLUMN & HEADER WITH 2" WASHER & NUT TOP		
2300 LB	⅝" X 10" AB ATTACHED TO ⅝" THREADED ROD WITH ⅝" COUPLER THRU COLUMN & HEADER WITH 2" WASHER & NUT TOP		

W12 - PORCH HEADER ANCHORS

SCALE: N.T.S. REV-18-JUL-03

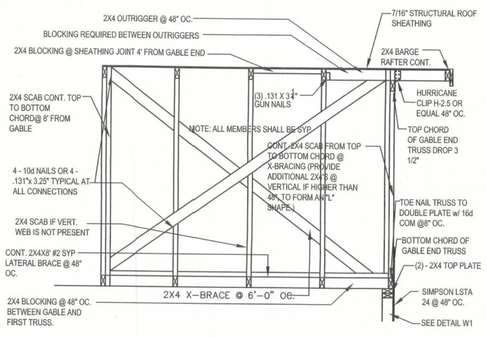

W10 - TYPICAL GABLE END (X-BRACING)

SCALE: 1/2"=1'-0"

R1 - DORMER ANCHORING DETAIL

SCALE: N.T.S. REV-04-JUN03

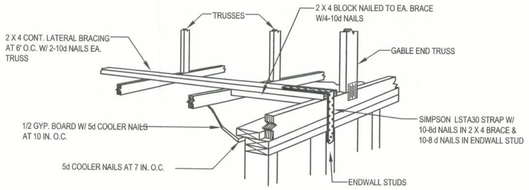

ALTERNATIVE TO BALLOON FRAMING IS GYPSUM CEILING DIAPHRAGM AS SPECIFIED IN THE "WOOD FRAME CONSTRUCTION MANUAL" (WFCM). SEE WFCM TABLE 3.13 AND FIGURE 3.6a. SHONE ABOVE. PROTECT GYPSUM FROM MOISTURE TO PRESERVE STRENGTH OF DIAPHRAGM.

NOTE: EXTEND RAT RUN BRACES GABLE TO GABLE OR A LENGTH EQUAL TO 1/2 OF GABLE WIDTH FOR ROOFS UP TO 7:12 AND 5/8 OF GABLE WIDTH OVER 7:12

W23 - GYPSUM CEILING DIAPHRAGM OPTION - GABLE END WALL

SCALE: N.T.S.

N5 - TRUSS UPLIFT CONNECTOR TABLE

REV-18-NOV-04

All connectors are Simpson Strongtie, uno. Select top and bottom connections from this table or SST catalog to meet truss uplift. Use fasteners as specified.

Uplift SPF	Uplift SYP	Truss Connector	To Plate	To Truss / Rafter
320	455	H3	4-8d	4-8d
245	350	H5A	3-8d	3-8d
535	600	H2.5A	5-8d	5-8d
620	720	H10	6-10dx1½"	6-10dx 1½"
850	990	LTS12	8-8dx1½"	8-8dx 1½"
1245	1450	HTS20	10-10d or 12-10dx1½"	10-10d or 12-10dx 1½"
1265	1470	H16, H16-2	10-10dx1½"	2-10dx 1½"
1785	2050	LGT2	14-10d Sinker	16-16d Sinker
3655	4200	MGT	⅝" Thd. Rod	22-10d
SPF	**SYP**	**Strap Connector**	**To One Member**	**To Other Member**
760	885	SP4	6-10dx1½"	N/A
865	1005	CS20	9-8d or 7-10d	9-8d or 7-10d
1085	1265	LSTA18-24	7-10d	7-10d
1170	1360	SPH4	12-10dx1½"	N/A
420	455	SSP	4-10d	3-10d to double plate or 1-10d to single
600	825	DSP	8-10d	6-10d to double plate or 2-10d to single
1420	1650	CS16	14-8d or 11-10d	14-8d or 11-10d
SPF	**SYP**	**Column Anchor**	**To Foundation**	**To Column / Truss**
1160	1350	LTT19	⅝"x 16" AB	8-16d Sinkers
1985	2310	LTT31	⅝"x 16" AB	18-10dx 1½"
2385	2775	HDZA	⅝"x 16" AB	2-⅝" Bolts
3590	4175	HTT16	⅝"x 16" AB	18-16d
1975	2300	ABU66	⅝"x 16" AB	12-16d

Studs Supporting Trusses: The builder is responsible for gravity loads, but you should put an extra 2x4 stud under truss bearing location for each 3000 lb of reaction. Check the minimum bearing requirements of the truss and top plate (SPF, Fc=425psi/223lb/psi).

Manufacturer and product number are listed for example not endorsement. An equivalent device of the same or other manufacturer can be substituted for any devices listed in the example tables as long as it meets the required load capacities. Manufacturer's installation instructions must be followed to achieve rated loads. All connections exposed directly to the weather shall be hot dipped galvanized after fabrication. Loads are increased for wind duration. Strap uplift may be reduced proportionally to number of nails. See spec sheet for alternate nail sizes (10d=.84*16d, 10dx1½"=.80*10d, 10d+12d=16d sinker). SPF=.86*SYP

N4-WIND LOAD DESIGN DATA

(Wind loads are per FBC 2004, Section 1609 for enclosed simple diaphragm buildings with mean roof height less than 60' or the least horizontal dimension; not sited on the upper half of an unobstructed 60' high hill with >10% slope.)

Basic Wind Speed	110 MPH
Wind Exposure	B
Wind Importance Factor	1.0
Building Category	II
Internal pressure Coefficient	N/A (Enclosed)
Building not in the high velocity hurricane zone	
Building not in the wind-borne debris region	
Mean Roof Height	< 30 ft
Roof Angle	10-45 degrees
Components And Cladding Wind Pressures (FBC Table1609 B&C)	

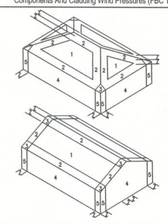

Zone	Effective Wind Area (ft2)			
	10		100	
4	21.8	-23.6	18.5	-20.4
5	21.8	-29.1	18.5	-22.6

Total Shear Wall Segments 2'-4"min for 8'-0"h wall 2'-10"min for 10'-0"H wall		
	Transverse	Longitudinal
Required	32.5'	29.5'
Actual	51.0'	80.1'

All exterior walls are type II shear walls ACTUAL SHEAR WALL length is the total of all wall segments with full height sheathing and width to height ratio greater than 1: 3.5 (plus special shear wall segments if noted.) REQUIRED SHEAR WALL length is from WFCM-2001, table 3.17A & 3.17B with table 3.17E adjustment for type II shear wall (or equivalent calculation)

REV-27-Jun-03

N3-WINDLOAD ENGINEER'S SCOPE OF WORK: The wind load engineer is engineer of record for compliance of the structure to wind load requirements of FBC 2004, Section 1609. If trusses are used, the wind load engineer is not engineer of record for the trusses and did not design the trusses or delegate to the truss designer.

BUILDER'S RESPONSIBILITY: The builder and owner are responsible for the following, which are specifically not part of the wind load engineer's scope of work.
* Confirm that the foundation design & site conditions meet gravity load requirements (assume 1000 PSF bearing capacity unless visual observation or soils test proves otherwise
* Provide materials and construction techniques, which comply with FBC 2004 requirements for the stated wind velocity and design pressures.
* Provide a continuous load path from roof to foundation. If you believe the plan omits a continuous load path connection, call the wind load engineer immediately.
* Verify the truss engineering includes truss design, placement plans, temporary and permanent bracing details, truss-to-truss connections, and load reactions for all bearing locations.
* Select uplift connections, walls, columns, and footings based on truss engineering bearing locations and reactions; including interior bearing walls.
* Size headers for gravity loads; headers sized by the builder for gravity loads will also satisfy wind loads.

DOCUMENT CONTROL and PRIORITY: Structural requirements on S-1 control unless the building code or architectural sheets have more stringent requirements. Non-structural requirements on architectural sheets control. Specific requirements take precedence over general requirements. Revision control is by the latest signature date and is the responsibility of the builder.

COPYRIGHTS AND PROPERTY RIGHTS: Mark Disosway, P.E. hereby expressly reserves its common law copyrights and property right in these instruments of service. This document is not to be reproduced, altered or copied in any form or manner without first the express written permission and consent of Mark Disosway.

DIMENSIONS:
Stated dimensions supercede scaled dimensions. Refer all questions to Mark Disosway, P.E. for resolution. Do not proceed without clarification.

WINDLOAD ENGINEER: Mark Disosway, PE No.53915

CERTIFICATION: The attached plans and "Windload Engineering", sheet S-1, comply with FBC 2004, Section 1609 wind loads, to the best of my knowledge.

LIMITATION: This design is valid for one building, at specified location.
This drawing is not valid for construction unless raised seal is affixed.

REV-06-OCT-03

WINDLOAD ENGINEERING
"EVERYTHING YOU NEED FOR YOUR BUILDING PERMIT
Mark Disosway P.E.
POB 868, Lake City, FL 32056 Phone: (386) 754-5419
Fax: (386) 269-4871 Email: windloadengineer@bellsouth.net

Location: Deer Hammock S/D Columbia County, Florida

Bert & Patty Giddens Residence

Builder:

Designer:

Approved: FLPE#53915 Revisions:

11Oct05

Sheet S-1 of 6 Sheets
Windload Engineering
Job # 510071