HUBERT

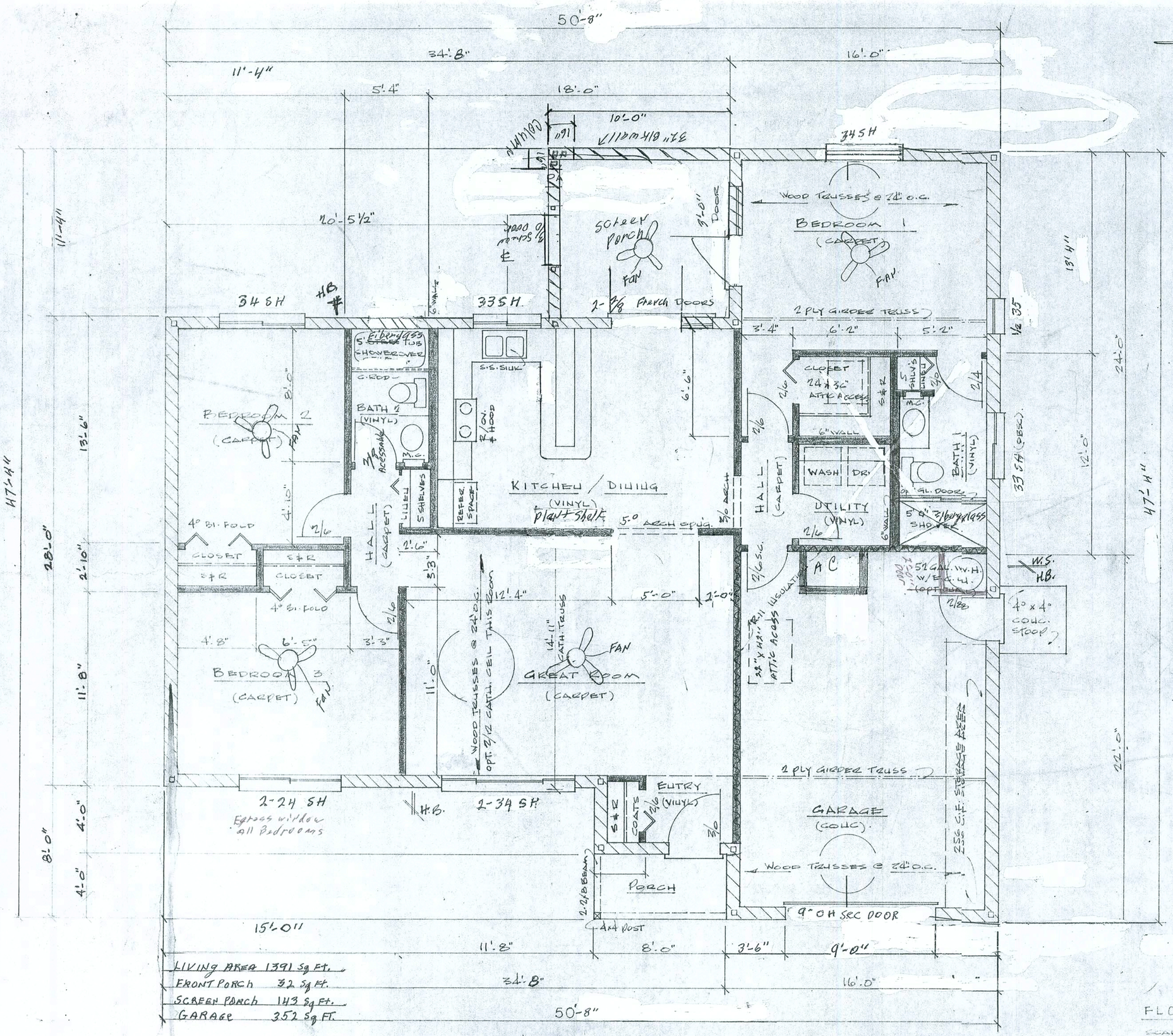

FLOR PLAN

LIVING AREA	1391 Sq Ft.
FRONT PORCH	32 Sq Ft.
SCREEN PORCH	143 Sq Ft.
GARAGE	352 Sq Ft.

PLAN NO. 1375

FLOOR PLAN

SCALE: ¼" = 1'-0"

RESIDENCE FOR HUBERT AND RAE CURRY @ 5862 S.W. HERLONG STREET, FORT WHITE

Hubert R. Curry

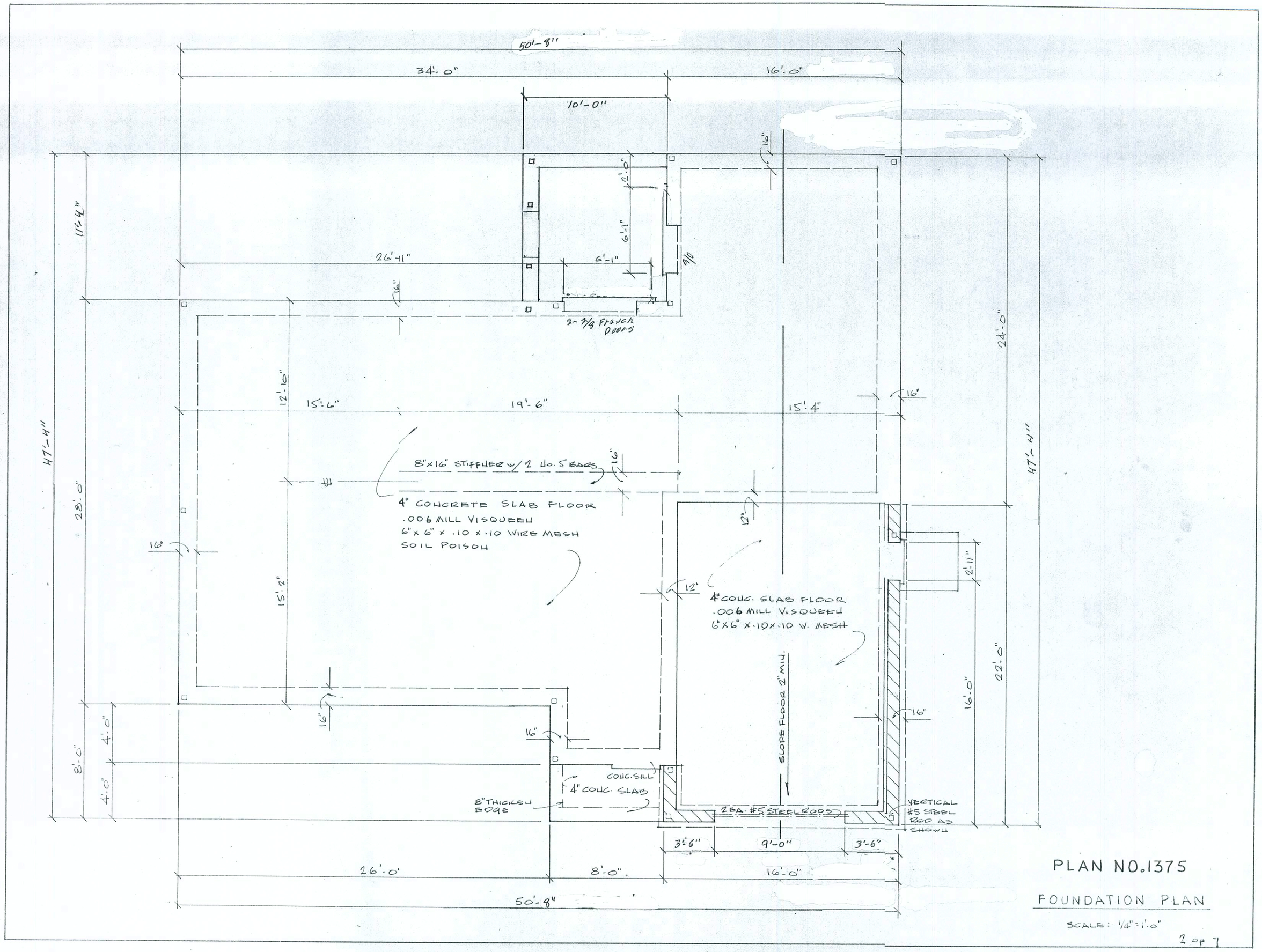

PLAN NO. 1375

FOUNDATION PLAN

SCALE: 1/4" = 1'-0"

2 of 7

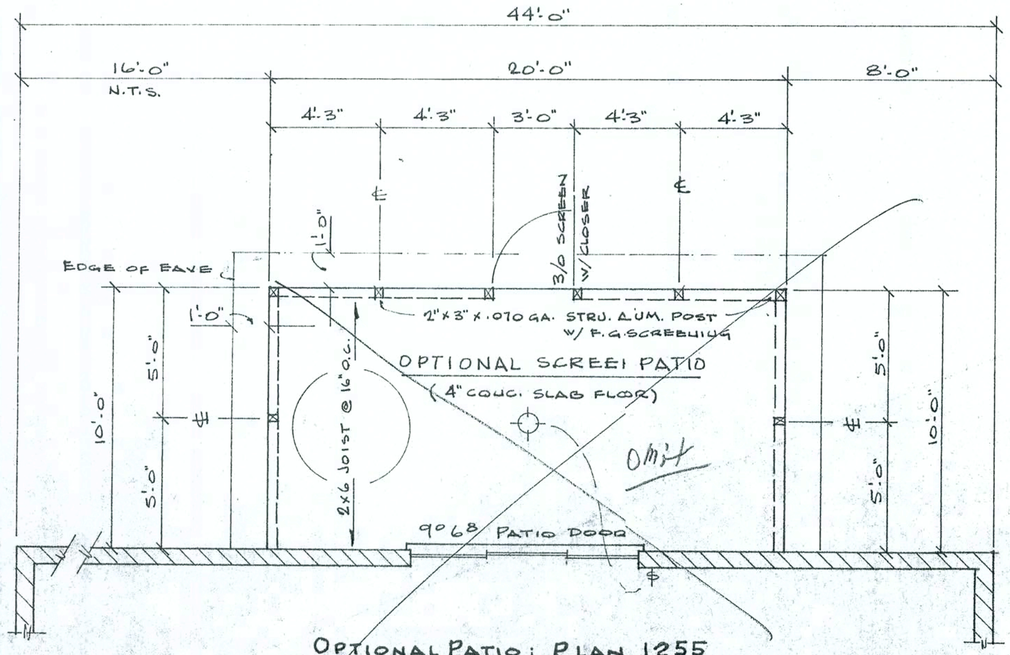

OPTIONAL PATIO: PLAN 1255

SCALE: 1/4" = 1'-0

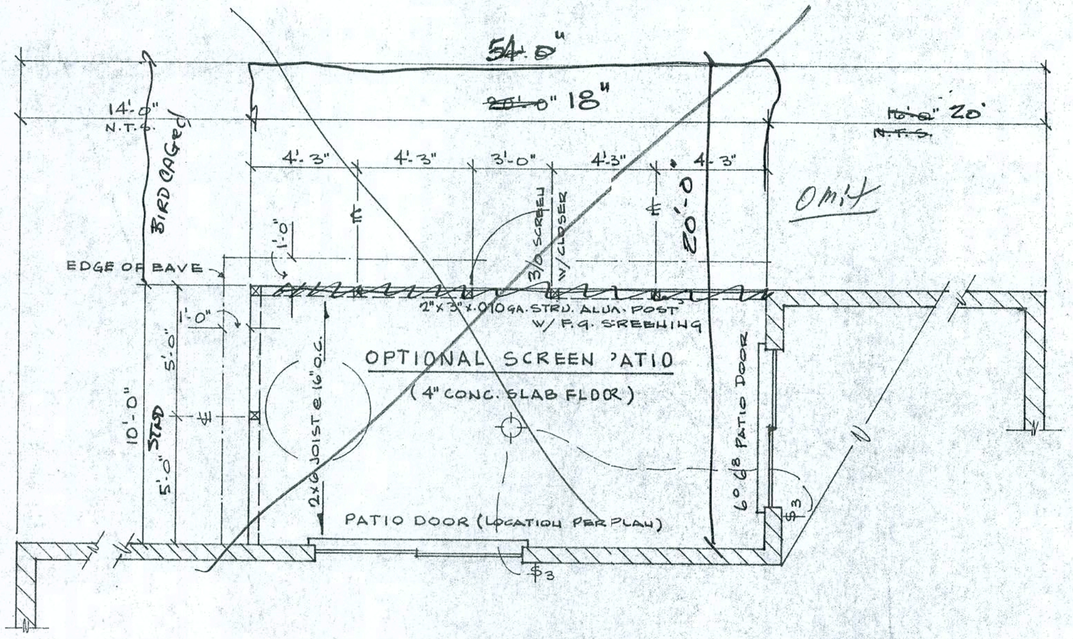

OPTIONAL PATIO: PLANS 1375 & 1190

SCALE: 1/4" = 1'-0"

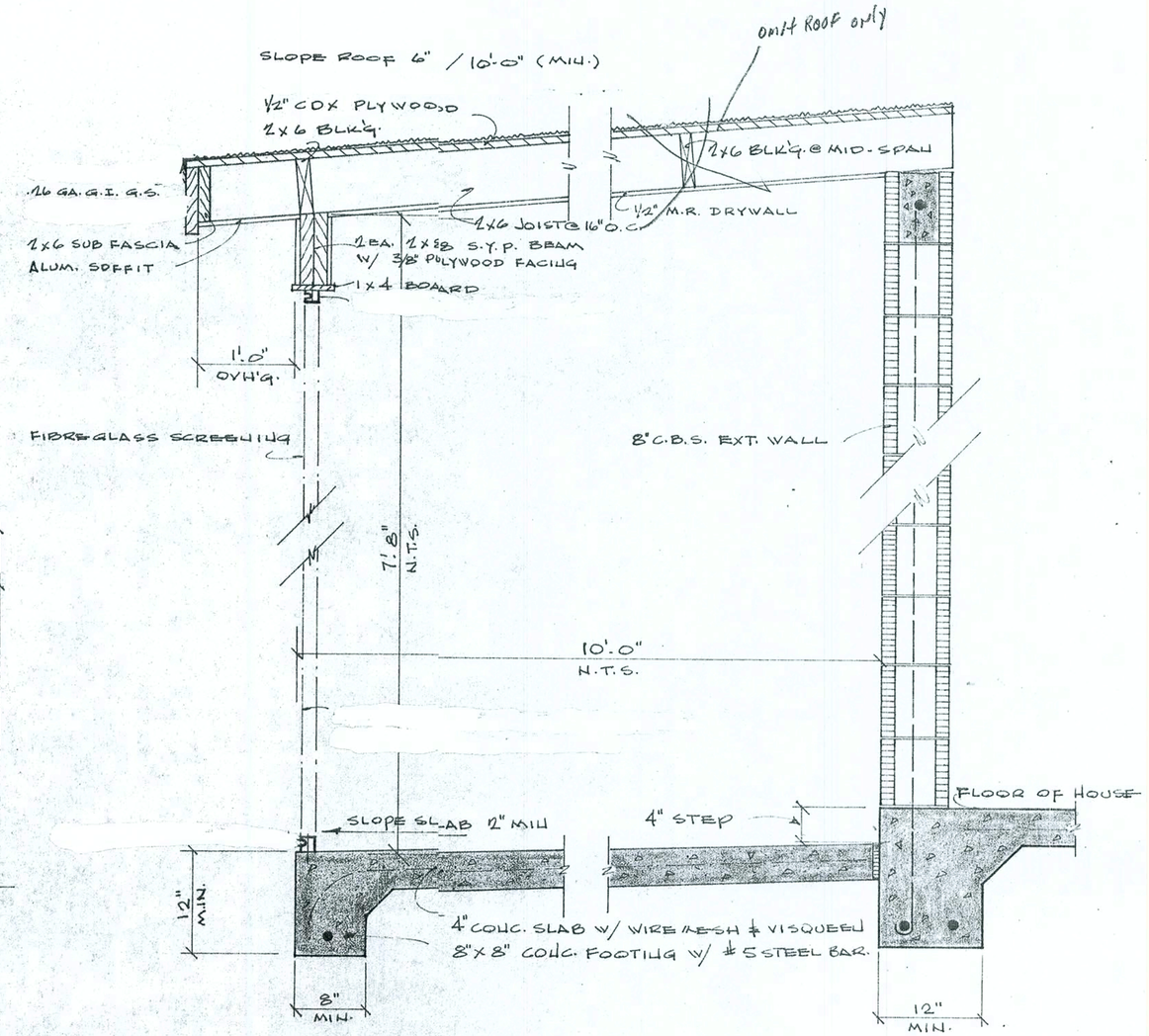

CONSTRUCTION DETAIL

SCALE: 1" = 1'-0"

OPTIONAL PATIO

SHEET NO. 3A OF 7

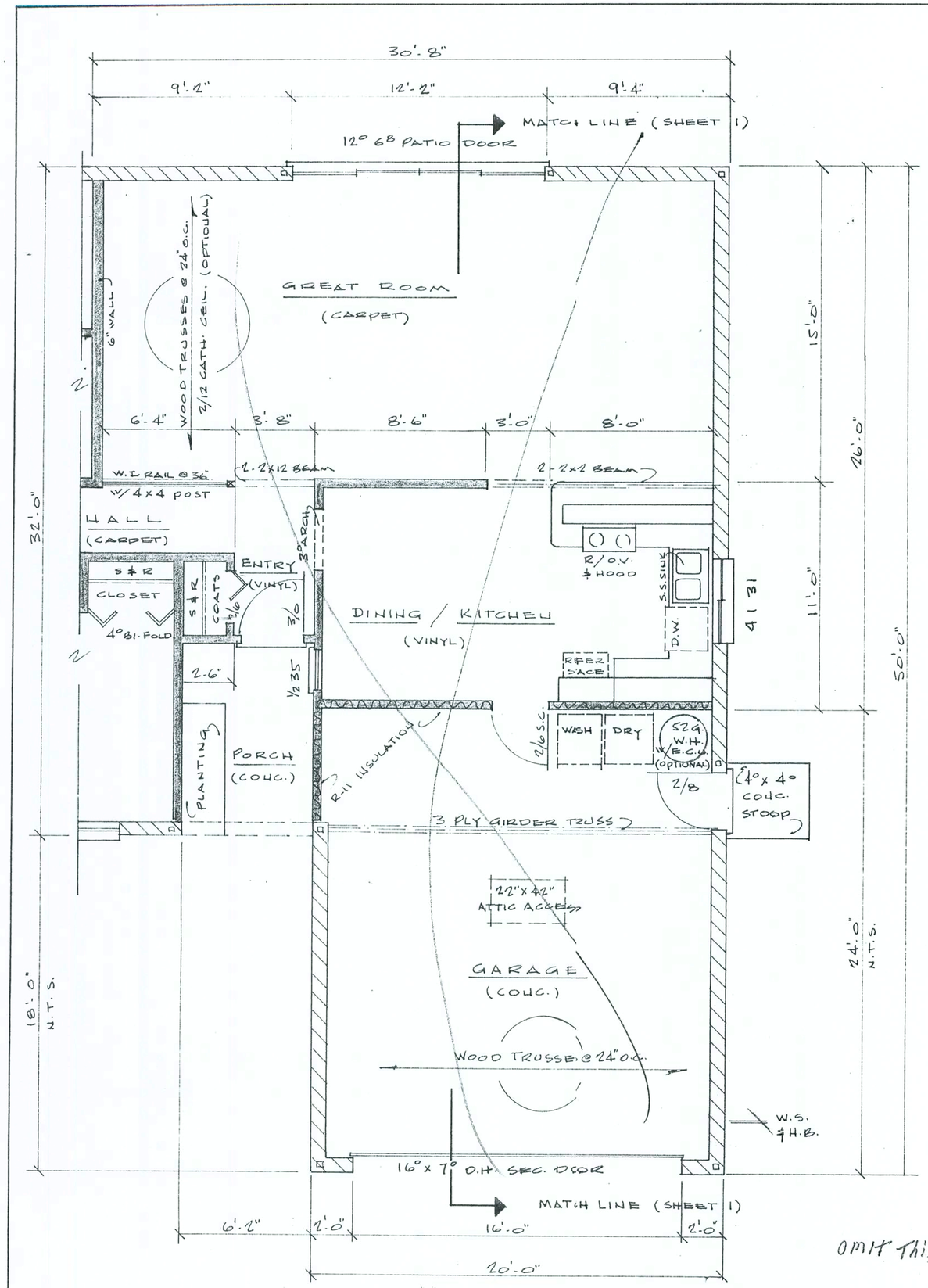

2 CAR GARAGE / LIVING OPTION

SCALE: 1/4" = 1'-0"

PLAN 1255

OMIT THIS Page

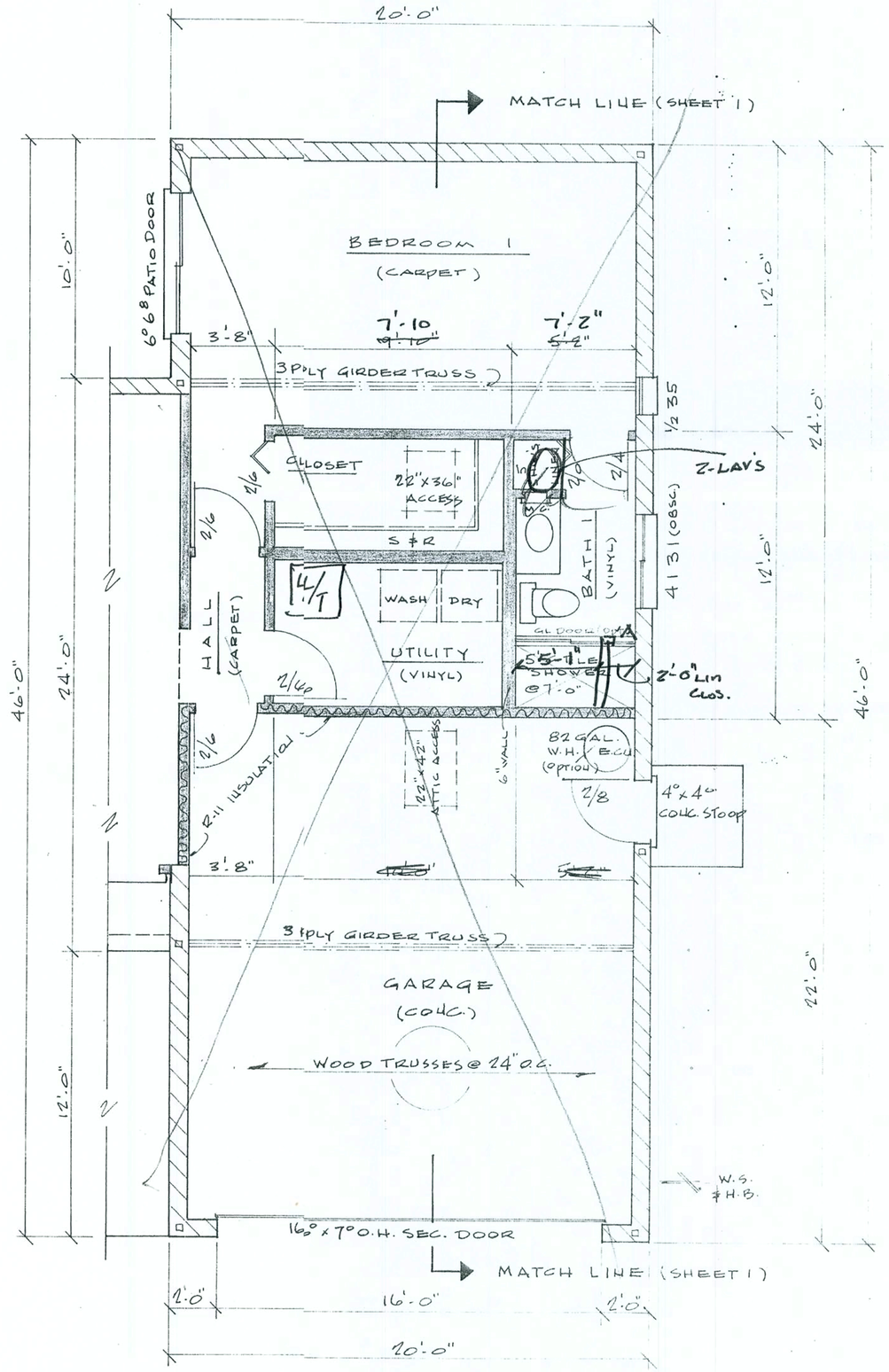

2 CAR GARAGE / LIVING OPTION

SCALE: 1/4" = 1'-0"

PLANS: 1190 & 1375

SHEET No. 38

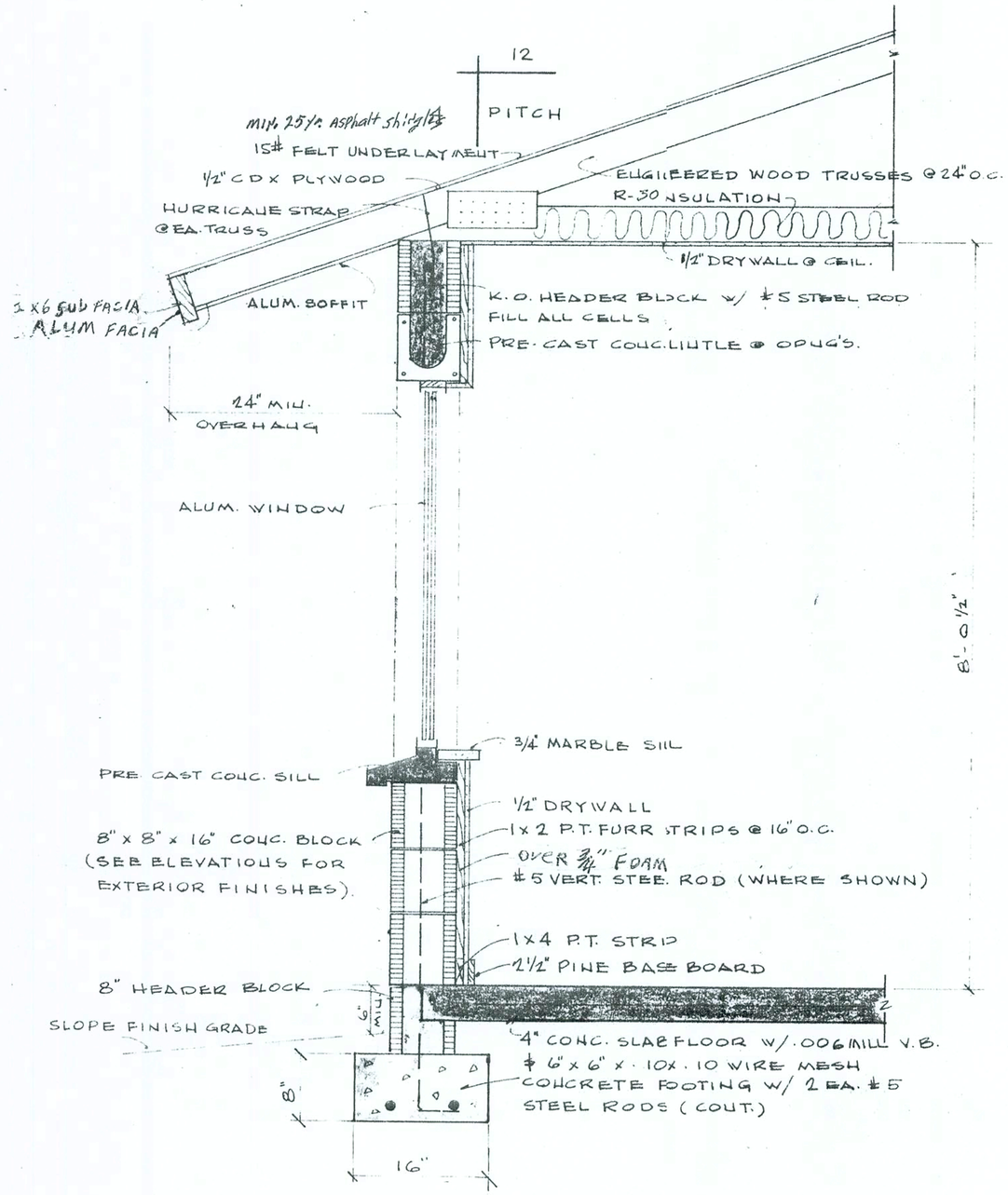

TYPICAL WALL SECTION

SCALE : 1" = 1'-0"

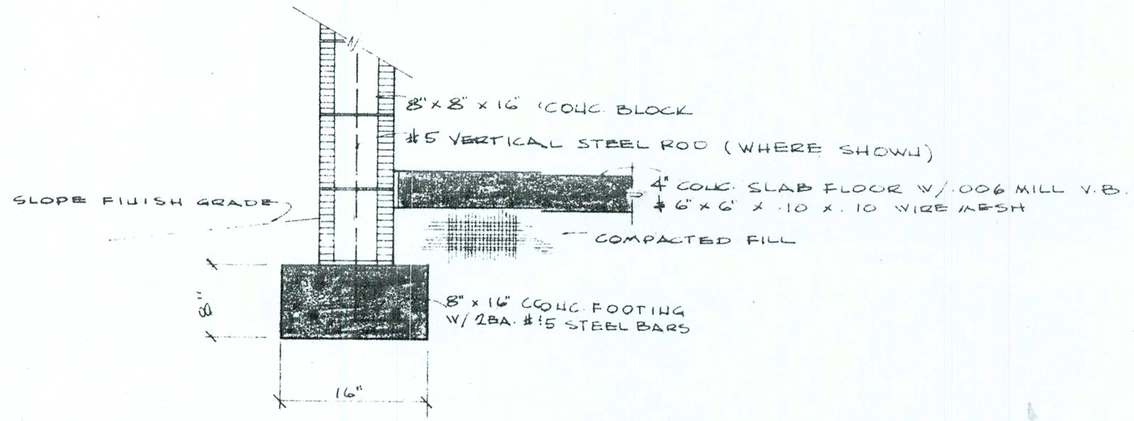

EXTERIOR GARAGE WALL

SCALE : 1" = 1'-0"

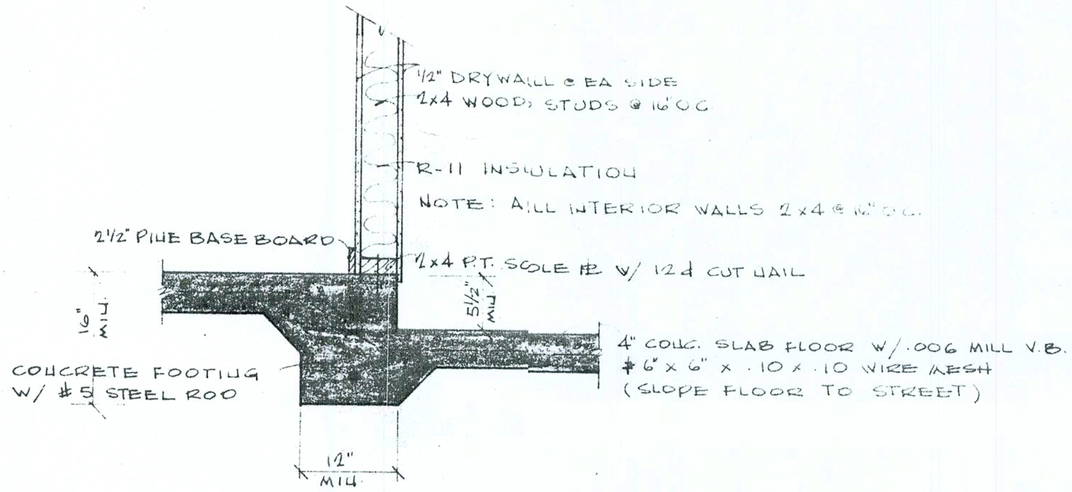

GARAGE / HOUSE SECTION

SCALE : 1" = 1'-0"

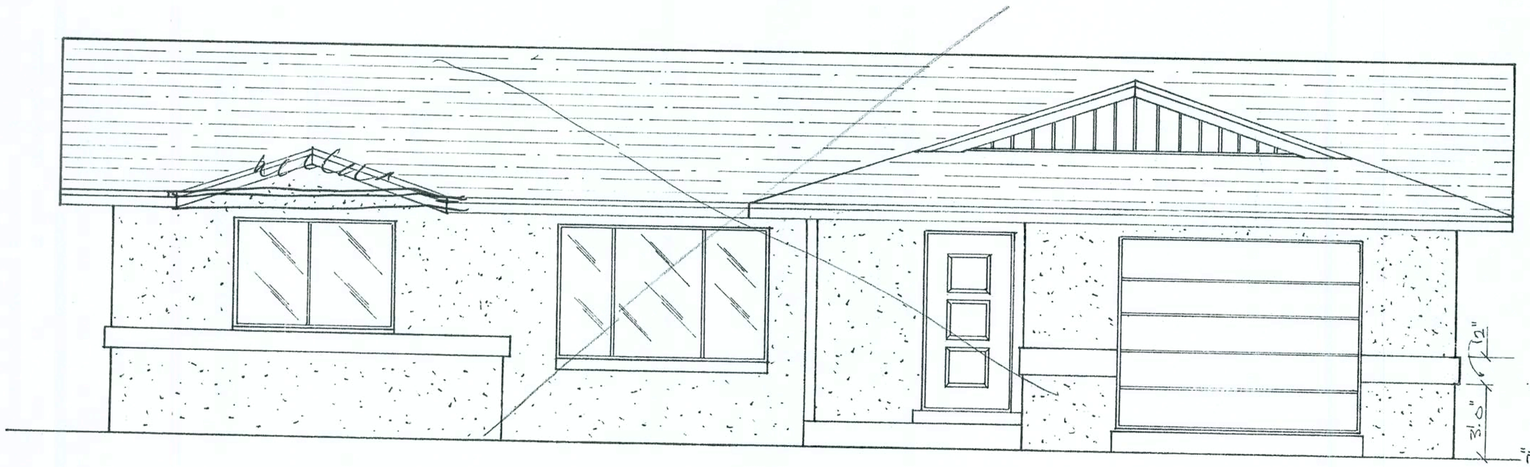

FRONT ELEVATION "~~B~~"

SCALE 1/4" = 1'-0"

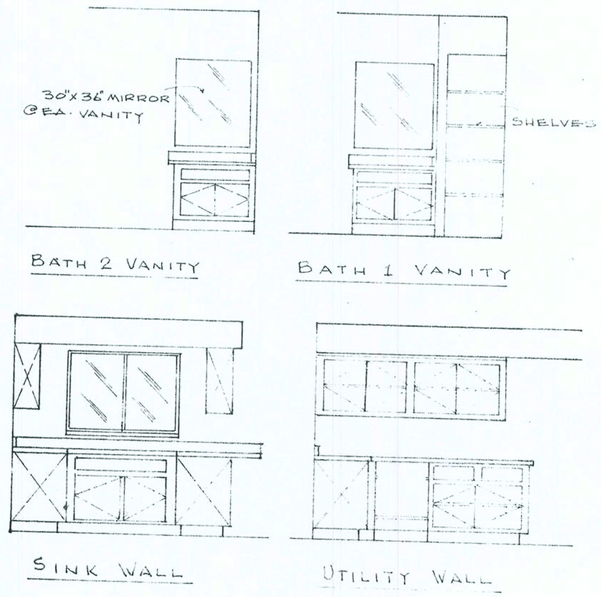

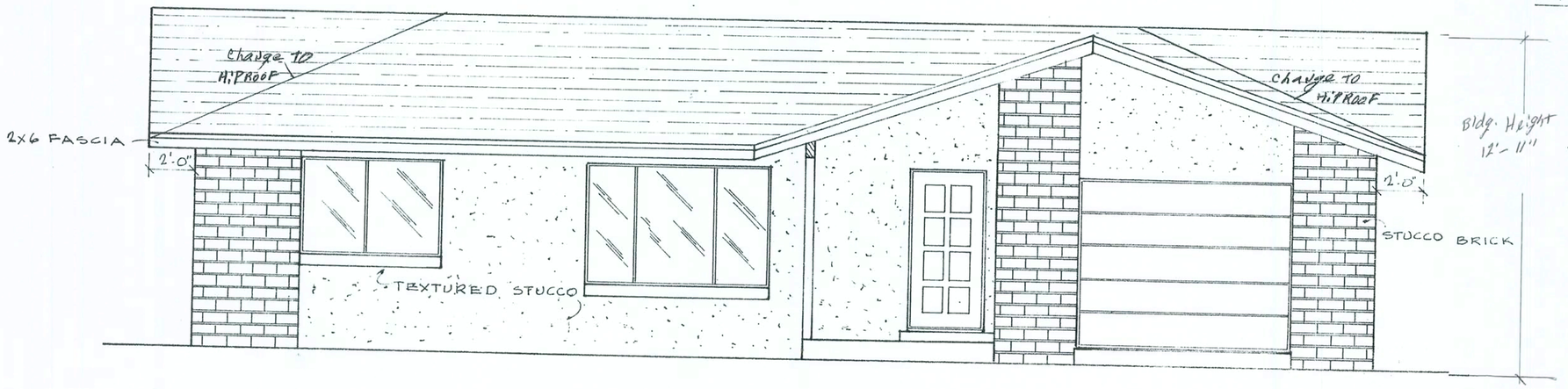

FRONT ELEVATION "A"

SCALE : 1/4" = 1'-0"

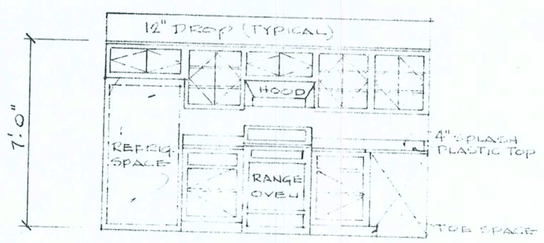

CABINETS & CASES

SCALE : 1/4" = 1'-0"

PLAN NO. 1375

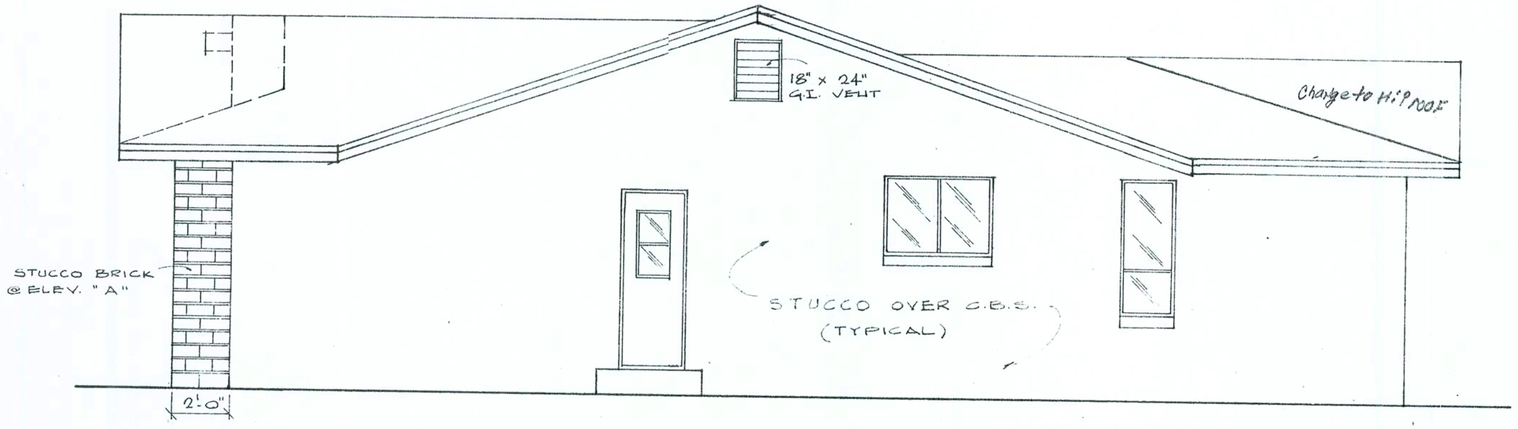

SIDE ELEVATION

SCALE : 1/4" = 1'-0"

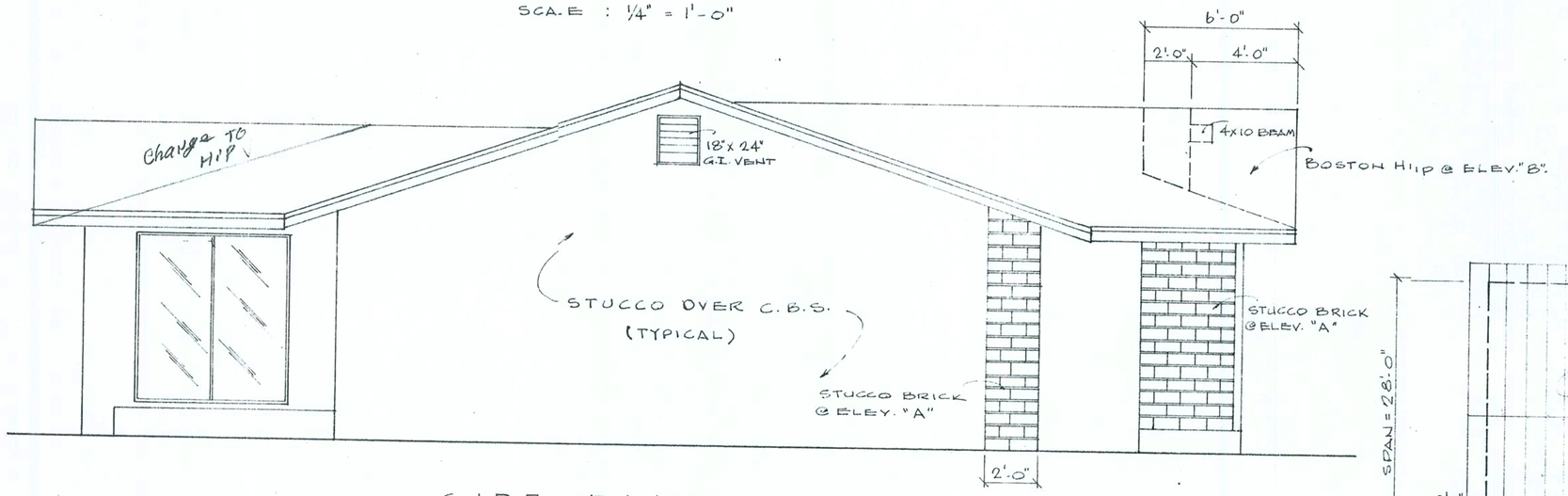

SIDE ELEVATION

SCALE : 1/4" = 1'-0"

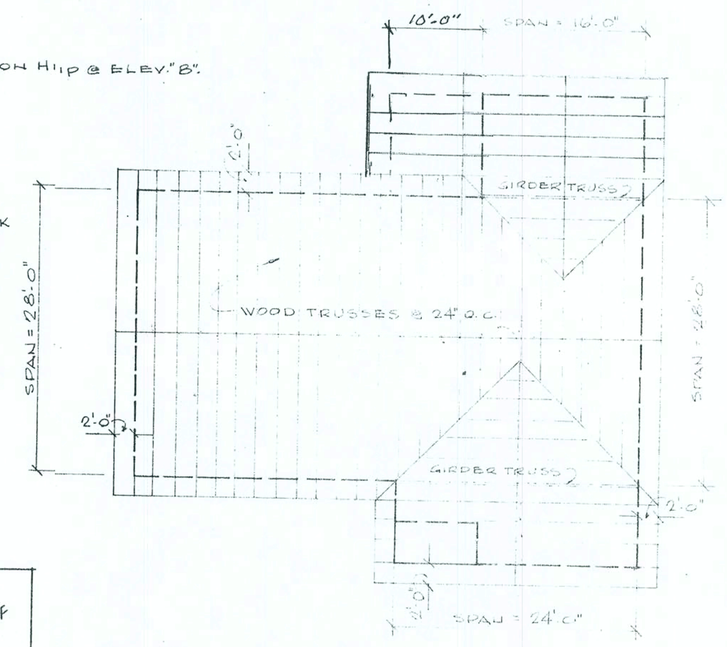

ROOF FRAMING PLAN

SCALE : 3/32" = 1'-0"

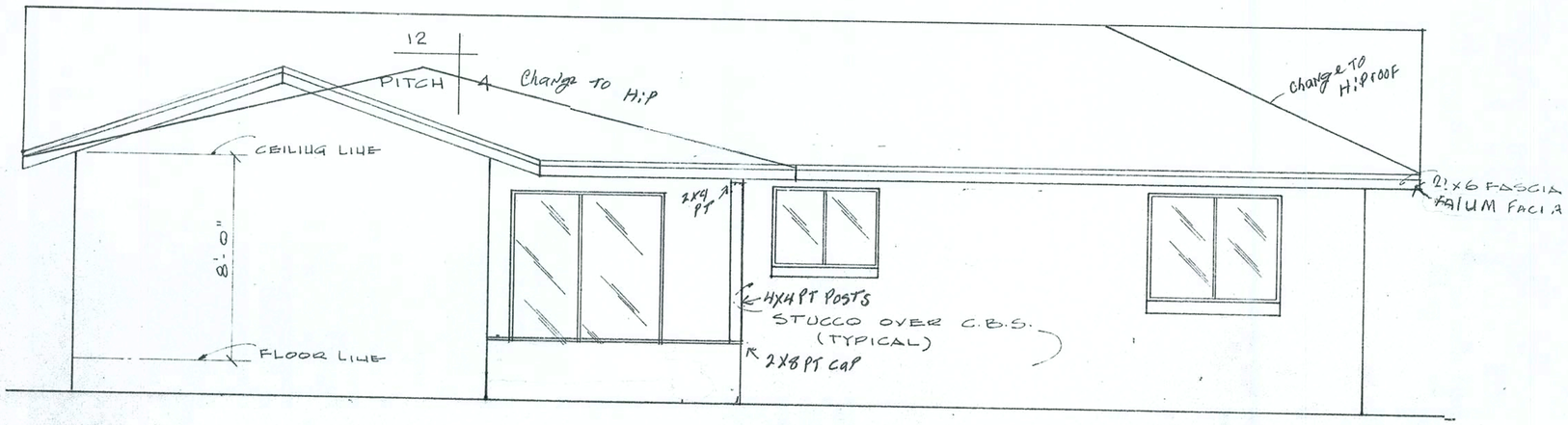

REAR ELEVATION

SCALE : 1/4" = 1'-0"

PLAN NO. 1375

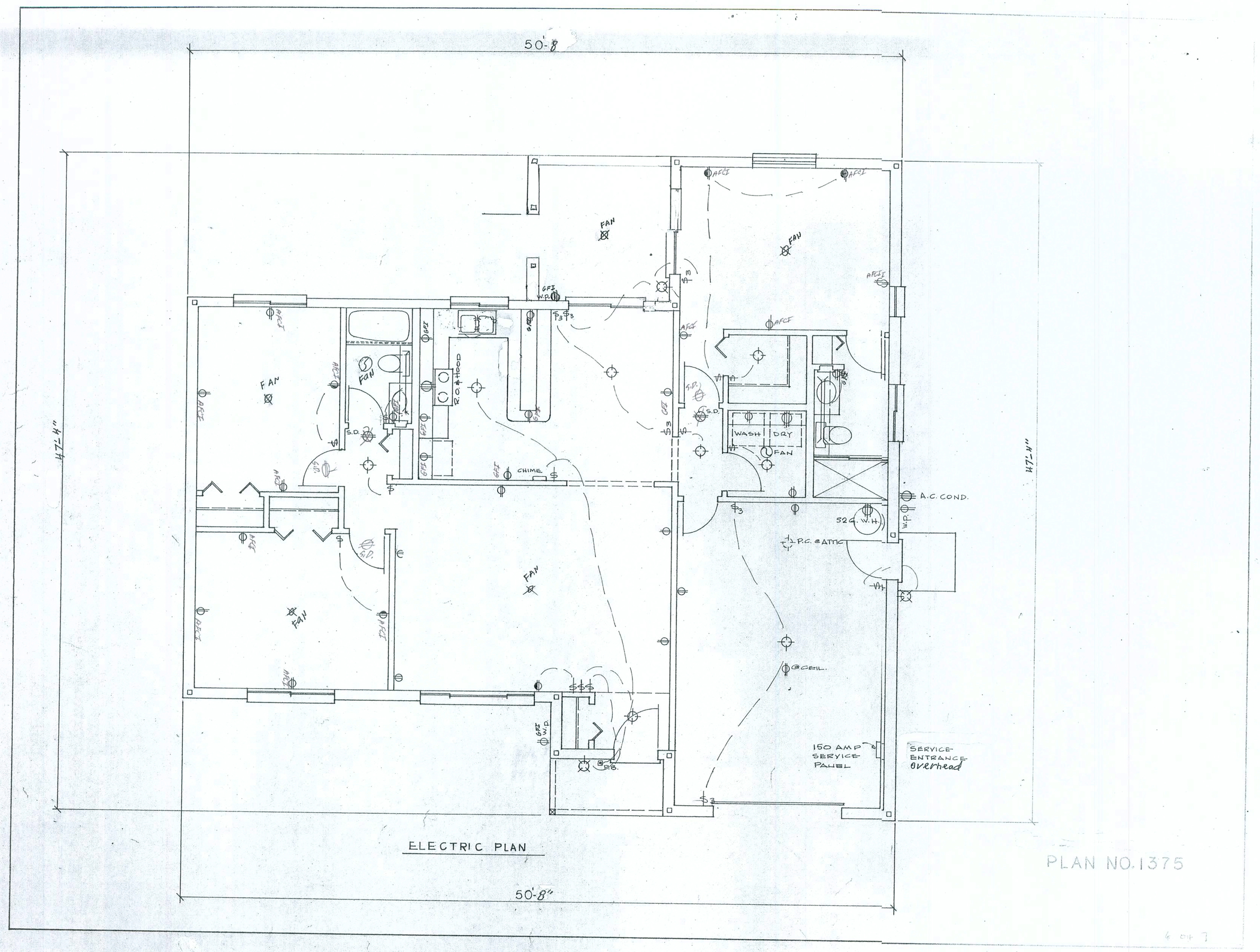

ELECTRIC PLAN

PLAN NO. 1375

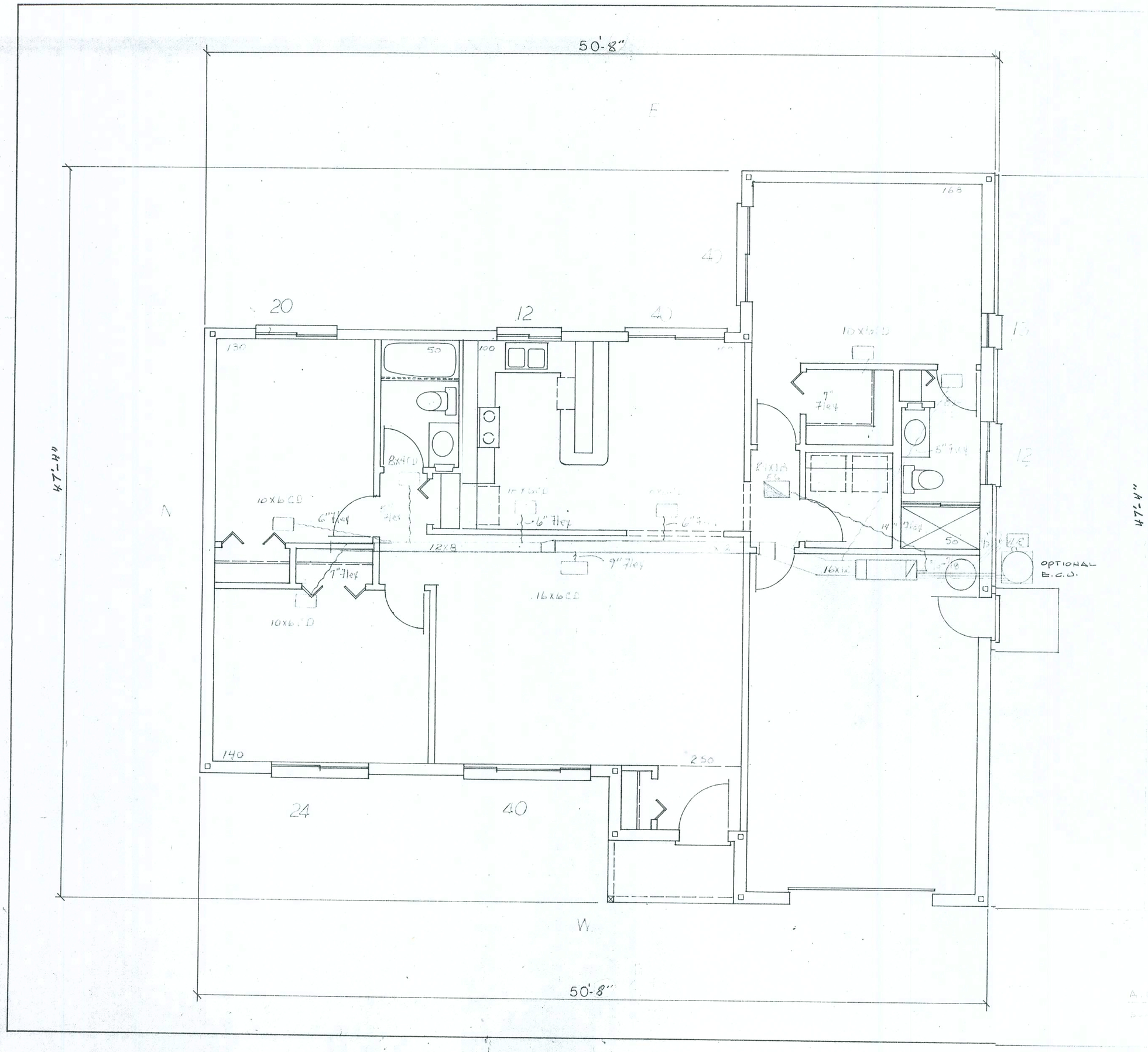
50'-8"
E
40
20
12
40
13
12
130
50
100
168
10x6 CD
7" Flex
6" Flex
8x4 CD
12x8
9" Flex
16x16 CD
14" Flex
50
16x16
OPTIONAL
E.C.D.
140
250
24
40
W
50'-8"
47'-4"
47'-4"

MASONRY ANCHOR TABLE

OBTAIN UPLIFT REQUIREMENTS FROM TRUSS MANUFACTURER'S ENGINEERING

UPLIFT LBS.	TRUSS CONNECTOR MASONRY *	
< 1040	META20	7–10d, 1 1/2"
< 1490	META20	10–10d, 1 1/2"
< 1735	HETA20	14–10d, 1 1/2"
< 1780	LGT2	7 – 1/4"x2 1/4" TITEN IN BLOCK 14 – 16d SINKER IN GIRDER
< 2130	HHETA20	17–10d, 1 1/2"
< 2310	HHETA24	21–10d, 1 1/2"

All connectors are Simpson Strongtie, uno. Select top and bottom connections from this table or SST catalog to meet truss uplift. Use fasteners as specified.

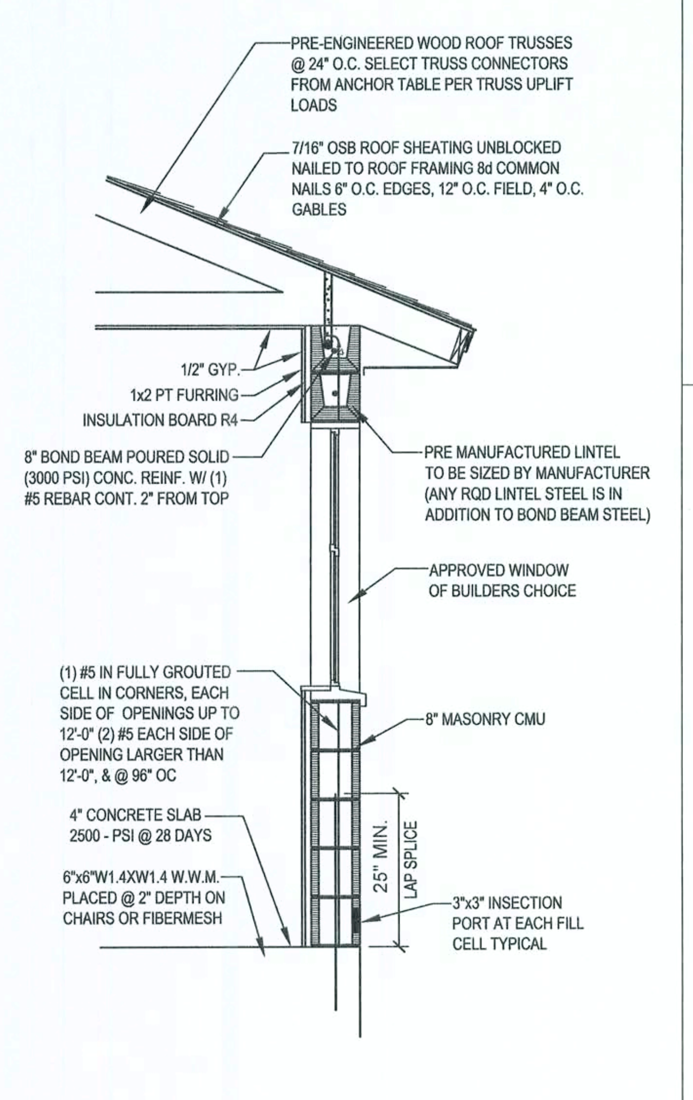

W6-TYP 1 - STORY BLOCK WALL SECTION
SCALE: 1/2"=1'-0" REV-13-Mar-04

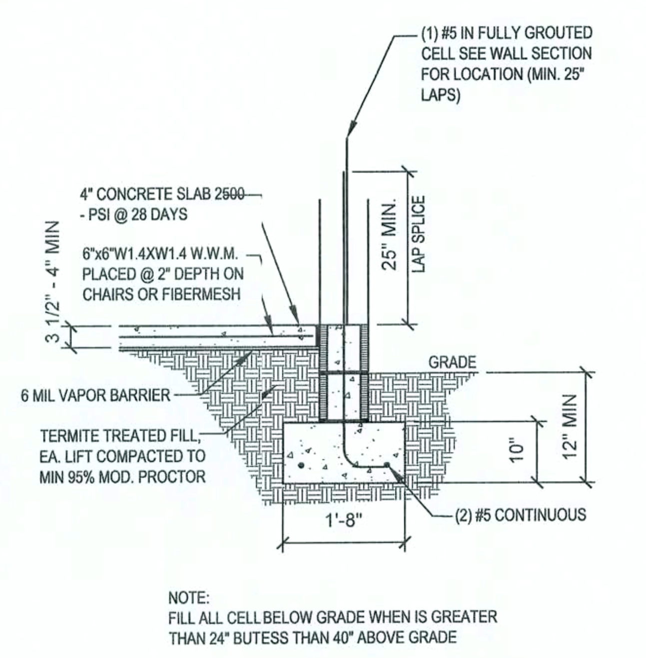

NOTE:
FILL ALL CELL BELOW GRADE WHEN IS GREATER THAN 24" BUTESS THAN 40" ABOVE GRADE

F14 - BLOCK WALL FOOTING
SCALE: 1/2"=1'-0" RE-31-MAR-04

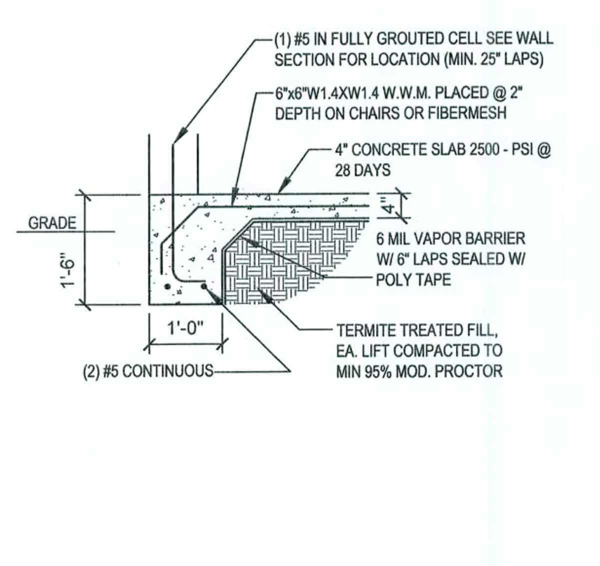

F15 - ALT. BLOCK WALL FOOTING
SCALE: 1/2"=1'-0" REV-31-MAR-04

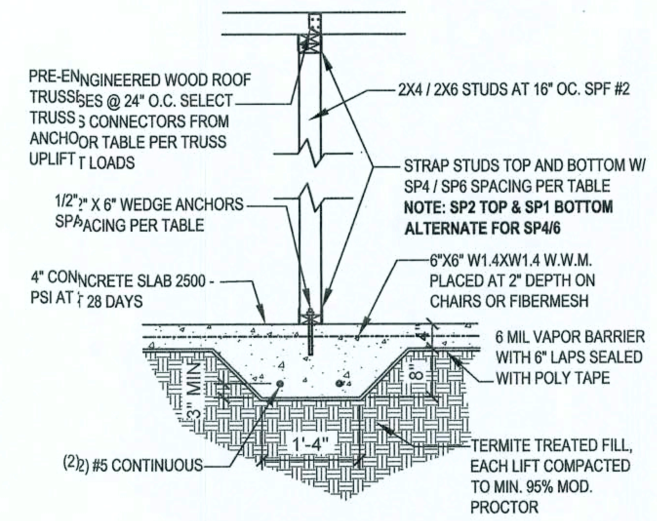

TYPICAL TRUSS UPLIFT	WEDGE ANCHOR SPACING	SP4 / SP6 SPACING	TRUSS CONNECTOR
400 LB	48" O.C.	48" O.C.	H2.5A
600 LB	48" O.C.	32" O.C.	H10
1000 LB	32" O.C.	16" O.C.	HTS20
2200 LB	LTTI31 W/ 5/8" X 7" WEDGE ANCHOR	N/A	(2) HTS20 NAILED TO STUD PACK

F4 - INTERIOR BEARING FOOTING
SCALE: 1/2"=1'-0" REV-22-AUG-03

BUILDER MUST SELECT HEADER BASED ON FBC 2001 TABLES OR HAVE IT SIZED BY SUPPLIER OR ENGINEER.

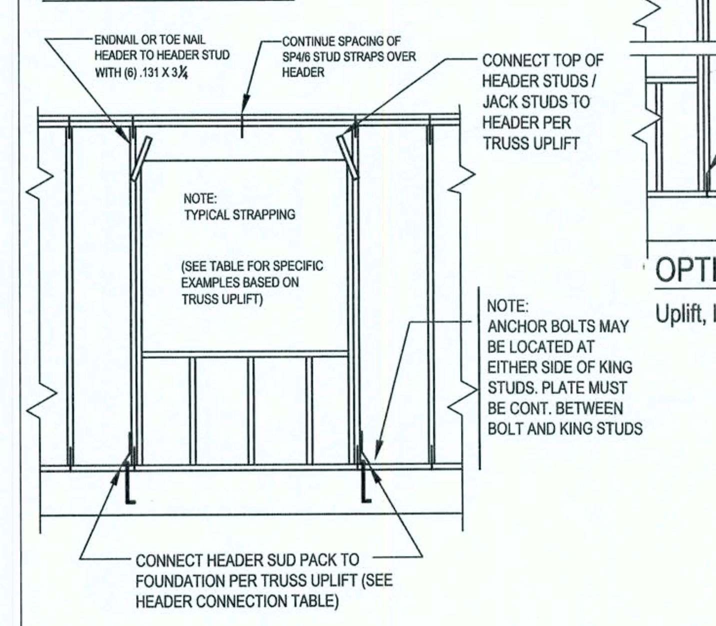

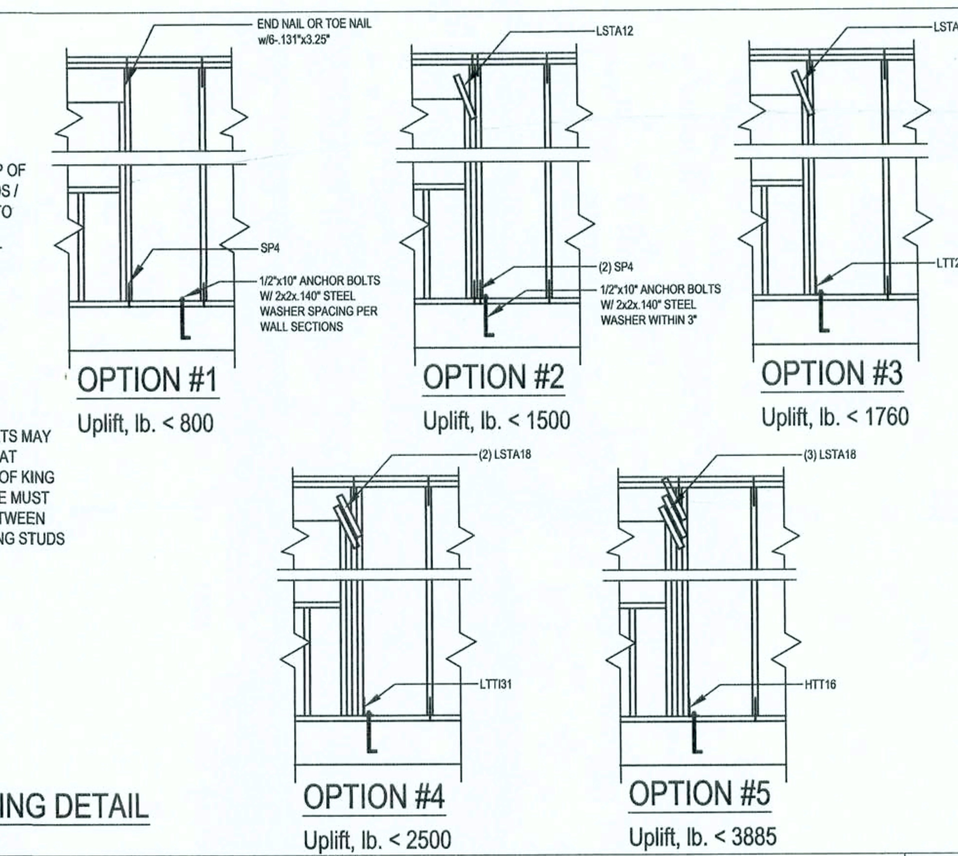

W13-TYPICAL HEADER SIZING & STRAPING DETAIL
SCALE: N.T.S. REV 22-AUG-03

Load Bearing Header Sizing Methods (BY BUILDER)
1. Determine header size from FBC 2001, Tables 2308.3 A, B, & C, or 2308.5.
2. Use supplier pubished data or Southern pine span tables.
3. For engineered lumber beams have suppliers engineer size beam.
Jack Studs and King Studs (BY BUILDER)
4. Lookup jack studs from FBC 2001, Tables 2308.3 A, B, & C, or 2308.5.
5. Use one jack stud for every 3000 lb vertical load.
6. Total king plus jack studs = studs needed to be there if no opening was there.
Header Uplift Connections (BY BUILDER)
7. Calculate the uplift at each end of the header by summing the moments of all truss uplifts and dividing by the length of the header.
8. Select header connections from table below or mfg. catalog to connect header to stud (top connection) and stud to foundation (bottom connection).

Option #	Uplift, lb.	Top Connector		Bottom Connector	
#1	< 800	End nail or toe nail w/6-.131"x3.25"		SP4, 6-10dx1½"	690
#2	< 1500	LSTA12, 0-10d	755	(2) SP4, 6-10dx1½", ½" AB	1380
#3	< 1750	LSTA18, 4-10d	1055	LTT20B, 10-16d ½" AB	1750
#4	< 2500	(2) LSTA8, 14-10d	2110	LTTI31, 18-10d½"x10" AB	2185
#5	< 3885	(3) LSTA8, 14-10d	3480	HTT16, 18-16d, ⅝"x10" AB	4175
Uplift greater than 3885 lb requires enginering design					

FBC2001, TABLE 2308.3A
Header Spans For Exterior Bearing Walls Supporting Roof+Ceiling (20psf+20psf)

NOTES: NJ = Number of jack studs required to support each end. Building width is measured perpendicular to the ridge. For widths between those shown, spans may be interpolated. Spans are based on uniform loads on header.

Header Sizes	20 Span	20 NJ	28 Span	28 NJ	36 Span
2-2x4	3-6	1	3-2	1	2-10
2-2x6	5-5	1	4-8	1	4-2
2-2x8	6-10	1	5-11	2	5-4
2-2x10	8-5	2	7-3	2	6-6
2-2x12	9-9	2	8-5	2	7-6
3-2x8	8-4	1	7-5	1	6-8
3-2x10	10-6	1	9-1	2	8-2
3-2x12	12-2	2	10-7	2	9-5
4-2x8	9-2	1	8-4	1	7-6
4-2x10	11-8	1	10-6	1	9-5
4-2x12	14-1	1	12-2	2	10-11

Header Spans (ft-in); Building Width / Truss Span (ft)

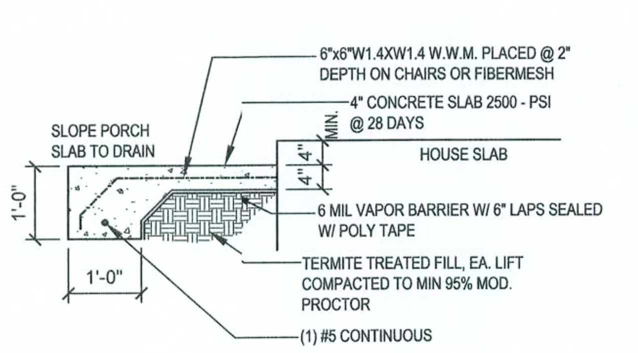

F2 - PORCH SLAB
SCALE: 1/2"1'-0" REV-22-AUG-03

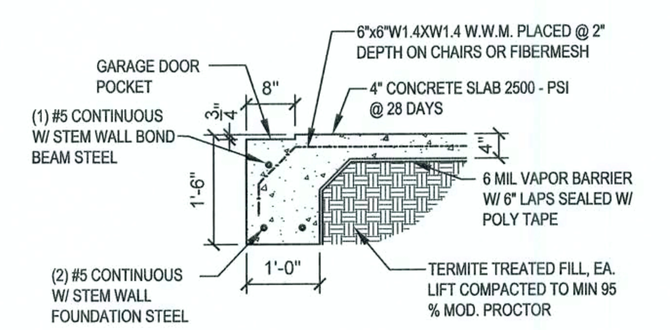

F3 - GARAGE DOOR POCKET
SCALE: 1/2"=1'-0" 22-AUG-03

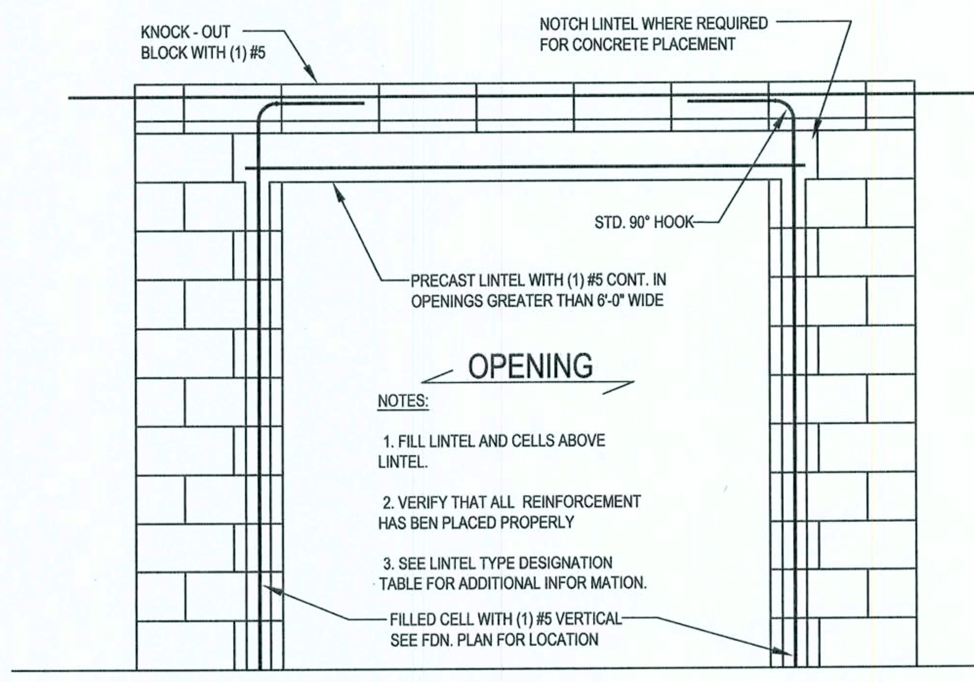

W22 - TYPICAL FILLED LINTEL ASSEMBLY DETAIL
SCALE: 1/2"=1'-0" REV-22-MAY-03

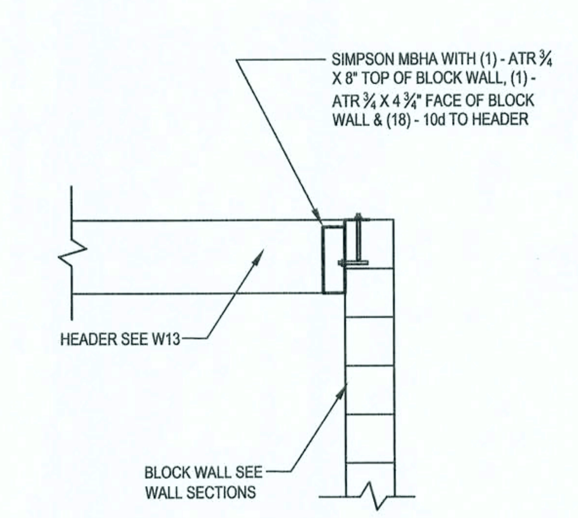

W30 - PORCH HEADER ATTACHMENT DETAIL @ WALL
SCALE: 1/2"=1'-0" REV-23-JUL-03

N2-GENERAL NOTES:

CONCRETE: MINIMUM COMPRESSIVE STRENGTH OF CONCRETE AT 28 DAYS SHALL BE F'c = 3000 PSI. WHERE EXCESS WATER IS ADDED TO THE CONCRETE SO THAT ITS SERVICABILITY IS DEGRADED, THE ATTAINMENT OF REQUIRED STRENGTH SHALL NOT RELEASE THE CONTRACTOR FROM PROVIDING SUCH MODIFICATIONS AS MAY BE REQUIRED BY THE ENGINEER TO PROVIDE A SERVICEABLE MEMBER OR SURFACE. ALL CONCRETE SHALL BE VIBRATED. NO REPAIR OR RUBBING OF CONCRETE SURFACES SHALL BE MADE PRIOR TO INSPECTION BY AND APPROVAL OF THE ENGINEER, OWNER OR HIS REPRESENTATIVE.

WELDED WIRE REINFORCED SLAB: 6" x 6" W1.4 x W1.4, FB = 85KSI, WELDED WIRE REINFORCEMENT FABRIC (W.W.M.) CONFORMING TO ASTM A185; LOCATED IN MIDDLE OF THE SLAB; SUPPORTED WITH APPROVED MATERIALS OR SUPPORTS AT SPACINGS NOT TO EXCEED 3'.

FIBER CONCRETE SLAB: CONCRETE SLABS ON GROUND CONTAINING SYNTHETIC FIBER REINFORCEMENT. FIBER LENGTHS SHALL BE 1/2 INCH TO 2 INCHES IN LENGTH. DOSAGE AMOUNTS SHALL BE FROM 0.75 TO 1.5 POUNDS PER CUBIC YARD IN ACCORDANCE WITH THE MANUFACTURER'S RECOMMENDATIONS. SYNTHETIC FIBERS SHALL COMPLY WITH ASTM C 1116. THE MANUFACTURER OR SUPPLIER SHALL PROVIDE CERTIFICATION OF COMPLIANCE WITH ASTM C 1116 WHEN REQUESTED BY THE BUILDING OFFICIAL.

CONTROL JOINTS: WHERE SPECIFIED, SAWN CONTROL JOINTS IN SLAB-ON-GRADE SHALL BE CUT IN ACCORDANCE WITH ACI 302. JOINTS SHALL BE CUT WITHIN 12 HOURS OF SLAB PLACEMENT. THE LENGTH / WIDTH RATIOS OF SLAB AREAS SHALL NOT EXCEED 1.5 AND TYPICAL SPACING OF CUTS TO BE 12FT. DO NOT CUT WWM OR REINFORCING STEEL. (RECOMMENDED LOCATION OF CONTROL JOINTS IS SUBJECT TO OWNER AND CONTRACTOR'S APPROVAL. THE CONTROL JOINTS ARE NOT INTENDED TO PREVENT CRACKS BUT RATHER TO ENCOURAGE THE SLAB TO CRACK ON A GIVEN LINE.)

REBAR: ASTM A 615, GRADE 40, DEFORMED BARS, FY = 40 KSI. ALL LAPS SPLICES 40 * DB (25" FOR #5 BARS); UNO. ALL REINFORCEMENT SHALL BE DETAILED AND PLACED IN ACCORDANCE WITH ACI 315-95 WITH ACI 315-96 UNLESS NOTED OTHERWISE. ALL TENSION DEVELOPMENT LENGTHS SHALL BE 23 INCHES.

STRUCTURAL CONNECTORS: MANUFACTURERS AND PRODUCT NUMBER FOR CONNECTORS, ANCHORS, AND REINFORCEMENT ARE LISTED FOR EXAMPLE NOT ENDORSEMENT. AN EQUIVALENT DEVICE OF THE SAME OR OTHER MANUFACTURER CAN BE SUBSTITUTED FOR ANY DEVICES LISTED IN THE EXAMPLE TABLES AS LONG AS IT MEETS THE REQUIRED LOAD CAPACITIES. MANUFACTURER'S INSTALLATION INSTRUCTIONS MUST BE FOLLOWED TO ACHIEVE RATED LOADS.

ANCHOR BOLTS: A-307 ANCHOR BOLTS WITH MINIMUM EMBEDMENT AS SPECIFIED IN DRAWINGS BUT NO LESS THAN 7" IN CONCRETE OR REINFORCED BONDBEAM OR 15" IN GROUTED CMU.

WASHERS: WASHERS USED WITH 1/2" BOLTS TO BE 2" x 2" x 9/64"; WITH 5/8" BOLTS TO BE 3" x 3" x 9/64"; WITH 3/4" BOLTS TO BE 3" x 3" x 9/64"; WITH 7/8" BOLTS TO BE 3" x 3" x 5/16"; NO.

NAILS: ALL NAILS ARE COMMON NAILS UNLESS OTHERWISE SPECIFIED OR ACCEPTED BY FBC TEST REPORTS AS HAVING EQUAL STRUCTURAL VALUES.

REV-22-AUG-03

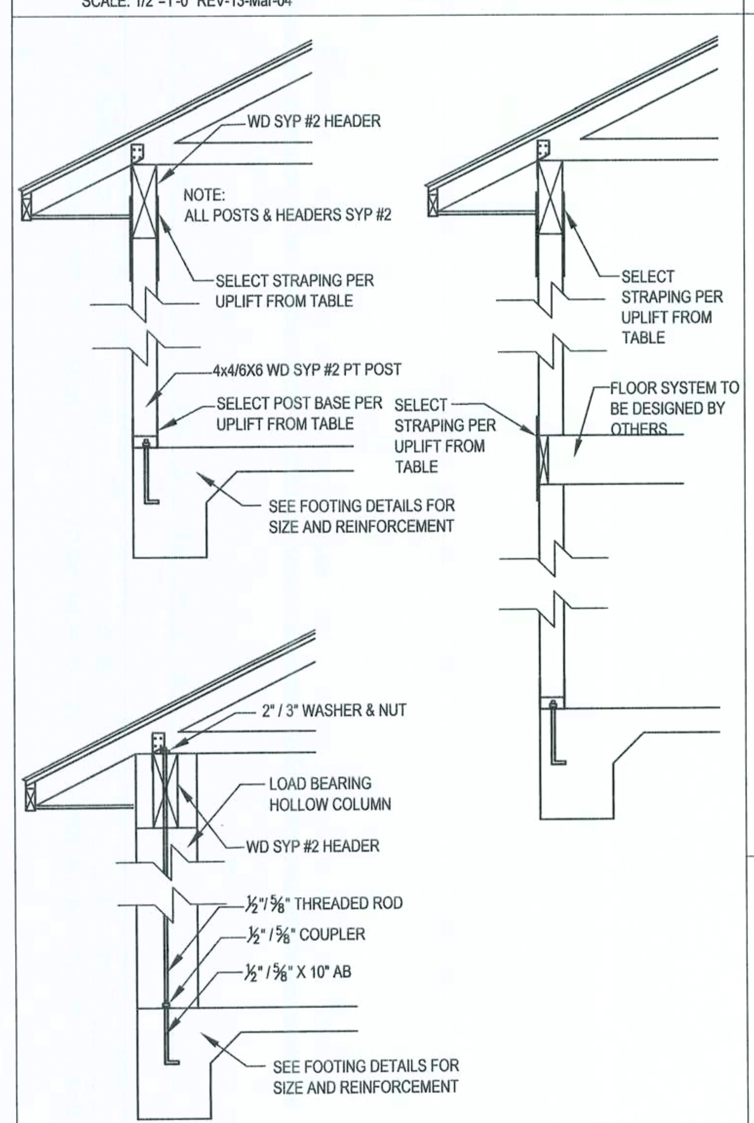

SYP #2 PT WD POSTS			
TYPICAL POST UPLIFT	POST BASE ANCHOR	BETWEEN FLOOR STRAPING	HEADER STRAPING
555 LB	ABA44 W/ (6)-10d & ½" AB	(2) LSTA21 W/ (6)-10d EA.	(2) LSTA21 W/ (6)-10d EA.
720 LB	ABA66 W/ (8)-16d & ⅝" AB	(2) LSTA21 W/ (8)-10d EA.	(2) LSTA21 W/ (8)-10d EA.
2200 LB	ABU44 W/ (12)-16d, (2)½ BOLTS & ⅝"AB	(2) LSTA21 W/ (16)-10d EA.	(2) LSTA21 W/ (16)-10d EA.
2300 LB	ABU66 W/ (12)-16d, (2)½ BOLTS & ⅝"AB	(2) LSTA21 W/ (16)-10d EA.	(2) LSTA21 W/ (16)-10d EA.
HOLLOW COLUMN			
1500 LB	½" X 10" AB ATTACHED TO ½" THREADED ROD WITH ½" COUPLER THRU COLUMN & HEADER WITH 2" WASHER & NUT TOP		
2300 LB	⅝" X 10" AB ATTACHED TO ⅝" THREADED ROD WITH ⅝" COUPLER THRU COLUMN & HEADER WITH 3" WASHER & NUT TOP		

W12 - PORCH HEADER ANCHORS
SCALE: N.T.S. REV-18-JUL-03

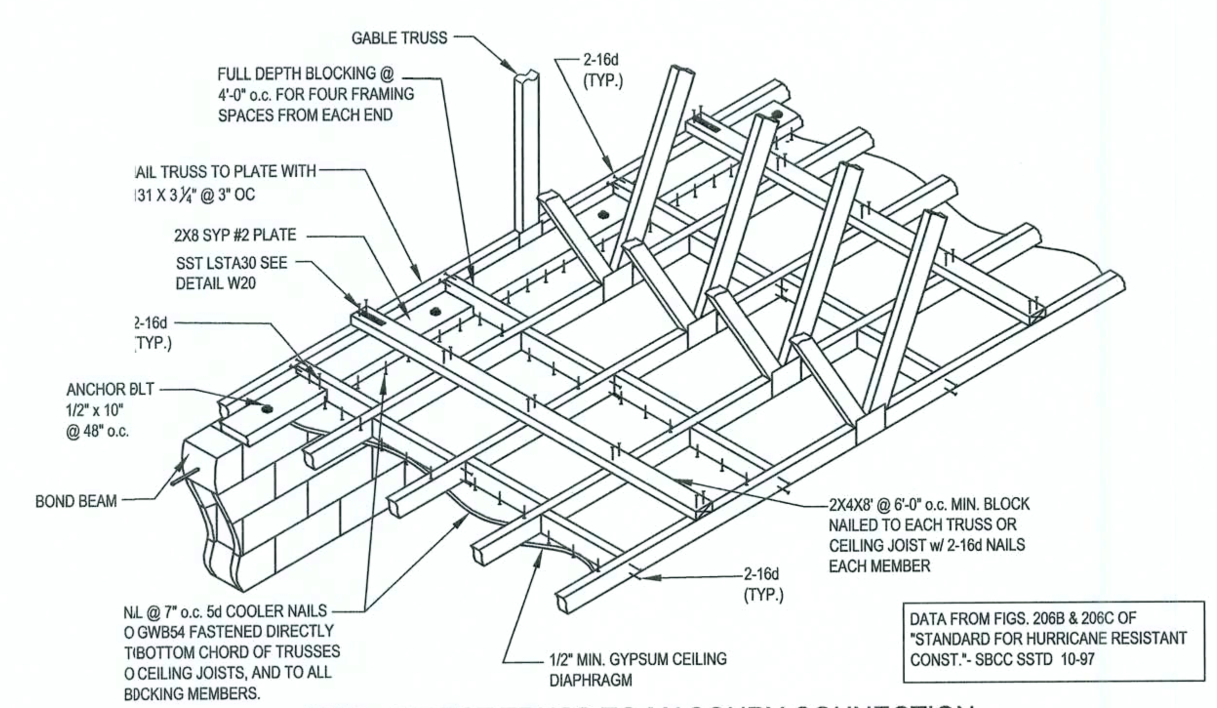

W18 - DIRECT TRUSS TO MASONRY CONNECTION ENDWALL FOR GYPSUM CEILING DIAPHRAGM
SCALE: N.T.S. REV-21-MAY-03

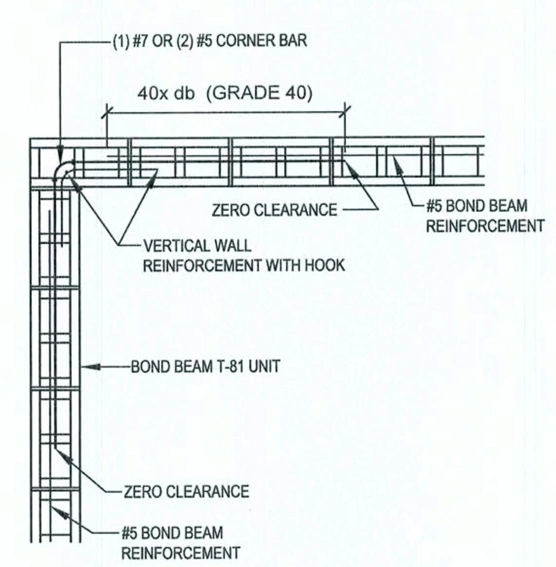

W21 - TYPICAL BOND BEAM CORNER DETAIL
SCALE: 1/2"=1'-0" REV-21-May-03

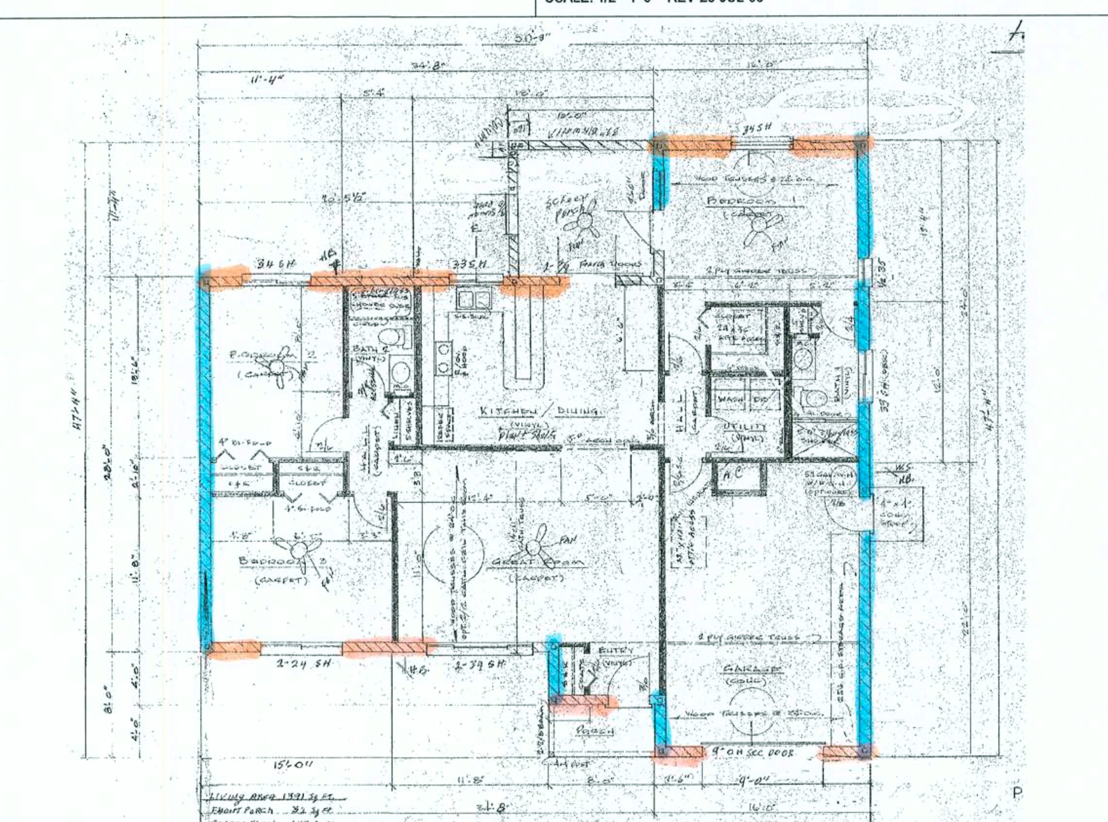

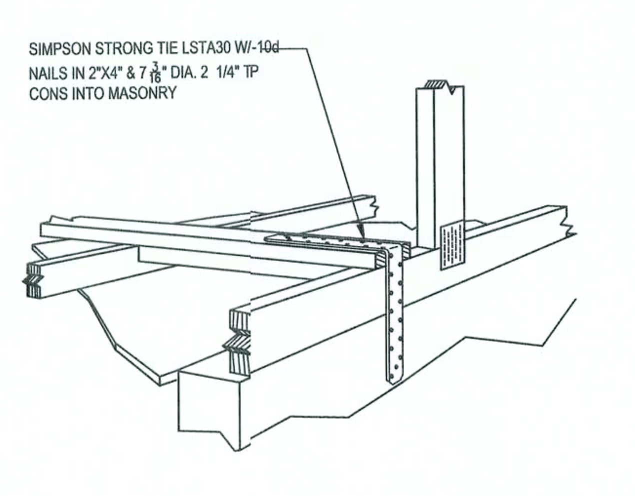

W20 - GABLE END GYPSUM DIAPHRAGM HOLDOWN CONNECTOR
SCALE: N.T.S. REV-21-MAY-03

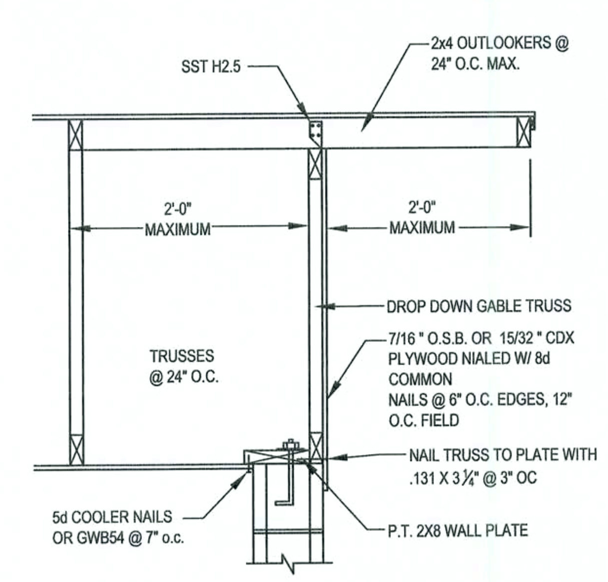

W19 - GABLE END OUTLOOKER DETAIL
SCALE: N.T.S. REV-21-MAY-03

N5 - TRUSS UPLIFT CONNECTOR TABLE
REV-25-AUG-03

All connectors are Simpson Strongtie, uno. Select top and bottom connections from this table or SST catalog to meet truss uplift. Use fasteners as specified.

Uplift SPF	Uplift SYP	Truss Connector	To Plate	To Truss / Rafter
320	455	H3	4-8d	4-8d
245	350	H5A	3-8d	3-8d
535	600	H2.5A	5-8d	5-8d
620	720	H10	6-10dx1½"	6-10dx 1½"
850	990	LTS12	8-8dx1½"	8-8dx 1½"
1245	1450	HTS20	10-10d or 12-10dx1½"	10-10d or 12-10dx 1½"
1265	1470	H16, H16-2	10-10dx1½"	2-10dx 1½"
1785	2050	LGT2	14-10d Sinker	16-16d Sinker
3655	4200	MGT	⅝" Thd. Rod	22-10d
SPF	SYP	Strap Connector	To One Member	To Other Member
760	885	SP4	6-10dx1½"	N/A
865	1005	CS20	9-8d or 7-10d	9-8d or 7-10d
1085	1265	LSTA18-24	7-10d	7-10d
1170	1360	SPH4	12-10dx1½"	N/A
1420	1650	CS16	14-8d or 11-10d	14-8d or 11-10d
SPF	SYP	Column Anchor	To Foundation	To Column / Truss
1160	1350	LTT19	⅝"x 16" AB	8-16d Sinkers
1985	2310	LTTI31	⅝"x 16" AB	18-10dx 1½"
2385	2775	HD2A	⅝"x 16" AB	2-⅝" Bolts
3590	4175	HTT16	⅝"x 16" AB	18-16d
1975	2300	ABU66	⅝"x 16" AB	12-16d

Studs Supporting Trusses: The builder is responsible for gravity loads, but you should put an extra 2x4 stud under truss bearing location for each 3000 lb of reaction. Check the minimum bearing requirements of the truss and top plate (SPF, Fc=425psi=2230lb/ply).

Manufacturer and product number are listed for example not endorsement. An equivalent device of the same or other manufacturer can be substituted for any devices listed in the example tables as long as it meets the required load capacities. Manufacturer's installation instructions must be followed to achieve rated loads. All connections exposed directly to the weather shall be hot dipped galvanized after fabrication. Loads are increased for wind duration. Strap uplift may be reduced proportionally to number of nails. See spec sheet for alternate nail sizes (10d=.84*16d, 10dx1½"=.80*10d, 10d=12d=16d sinker). SPF=.86*SYP

N4-WIND LOAD DESIGN DATA

(Wind loads are per FBC 2001, Section 1606.2 for enclosed simple diaphragm buildings with mean roof height less than 60' or the least horizontal dimension; not sited on the upper half of an unobstructed 60' high hill with >10% slope.)

Basic Wind Speed	110 MPH
Wind Exposure	B
Wind Importance Factor	1.0
Building Category	II
Internal pressure Coefficient	N/A (Enclosed)
Building not in the high velocity hurricane zone	
Building not in the wind-borne debris region	
Mean Roof Height	< 30 ft
Roof Angle	10-45 degrees

Components And Cladding Wind Pressures (FBC Table1606.2 B&C)

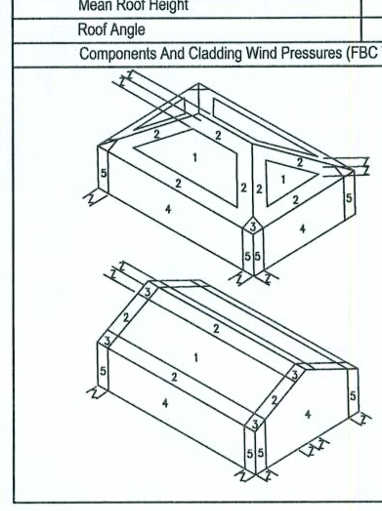

Zone	Effective Wind Area (ft2) 10		100	
4	21.8	-23.6	18.5	-20.4
5	21.8	-29.1	18.5	-22.6

Total Shear Wall Segments

	Transverse	Longitudinal
Required	10.0'	10.0'
Actual	78.0'	50.5'

REV-27-Jun-03

N3-WINDLOAD ENGINEER'S SCOPE OF WORK: The wind load engineer is engineer of record for compliance of the structure to wind load requirements of FBC 2001, Section 1606. If trusses are used, the wind load engineer is not engineer of record for the trusses and did not design the trusses or delegate to the truss designer.

BUILDER'S RESPONSIBILITY: The builder and owner are responsible for the following, which are specifically not part of the wind load engineer's scope of work.
* Confirm that the foundation design & site conditions meet gravity load requirements (assume 1000 PSF bearing capacity unless visual observation or soils test proves otherwise
* Provide materials and construction techniques, which comply with FBC 2001 requirements for the stated wind velocity and design pressures.
* Provide a continuous load path from roof to foundation. If you believe the plan omits a continuous load path connection, call the wind load engineer immediately.
* Verify the truss engineering includes truss design, placement plans, temporary and permanent bracing details, truss-to-truss connections, and load reactions for all bearing locations.
* Select uplift connections, walls, columns, and footings based on truss engineering bearing locations and reactions; including interior bearing walls.
* Size headers for gravity loads; headers sized by the builder for gravity loads will also satisfy wind loads.

DOCUMENT CONTROL and PRIORITY: Structural requirements on S-1 control unless the building code or architectural sheets have more stringent requirements. Non-structural requirements on architectural sheets control. Specific requirements take precedence over general requirements. Revision control is by the latest signature date and is the responsibility of the builder.

COPYRIGHTS AND PROPERTY RIGHTS: Mark Disosway, P.E. hereby expressly reserves its common law copyrights and property right in these instruments of service. This document is not to be reproduced, altered or copied in any form or manner without first the express written permission and consent of Mark Disosway.

DIMENSIONS:
Stated dimensions supercede scaled dimensions. Refer all questions to Mark Disosway, P.E. for resolution. Do not proceed without clarification.

WINDLOAD ENGINEER: Mark Disosway, PE No.53915

CERTIFICATION: The attached plans and "Windload Engineering", sheet S-1, comply with FBC 2001, Section 1606 wind loads, to the best of my knowledge.

LIMITATION: This design is valid for one building, at specified location.
This drawing is not valid for construction unless raised seal is affixed.

REV-06-OCT-03

WINDLOAD ENGINEERING
"EVERYTHING YOU NEED FOR YOUR BUILDING PERMIT"
Mark Disosway P.E.
POB 868, Lake City, FL 32056 Phone: (386) 754-5419
Fax: (386) 754-6749 Email: wndloadengineer@bellsouth.net

Location: 5862 SW Herlong St. Fort White, Florda

Hubert & Rea Curry
Residence

Builder:

Designer:

Approved: FLPE#53915
Mark Disosway 12JUL04
12Jul04

Revisions:

Sheet S-1 of 1 Sheet
Windload Engineering
Job # 407123