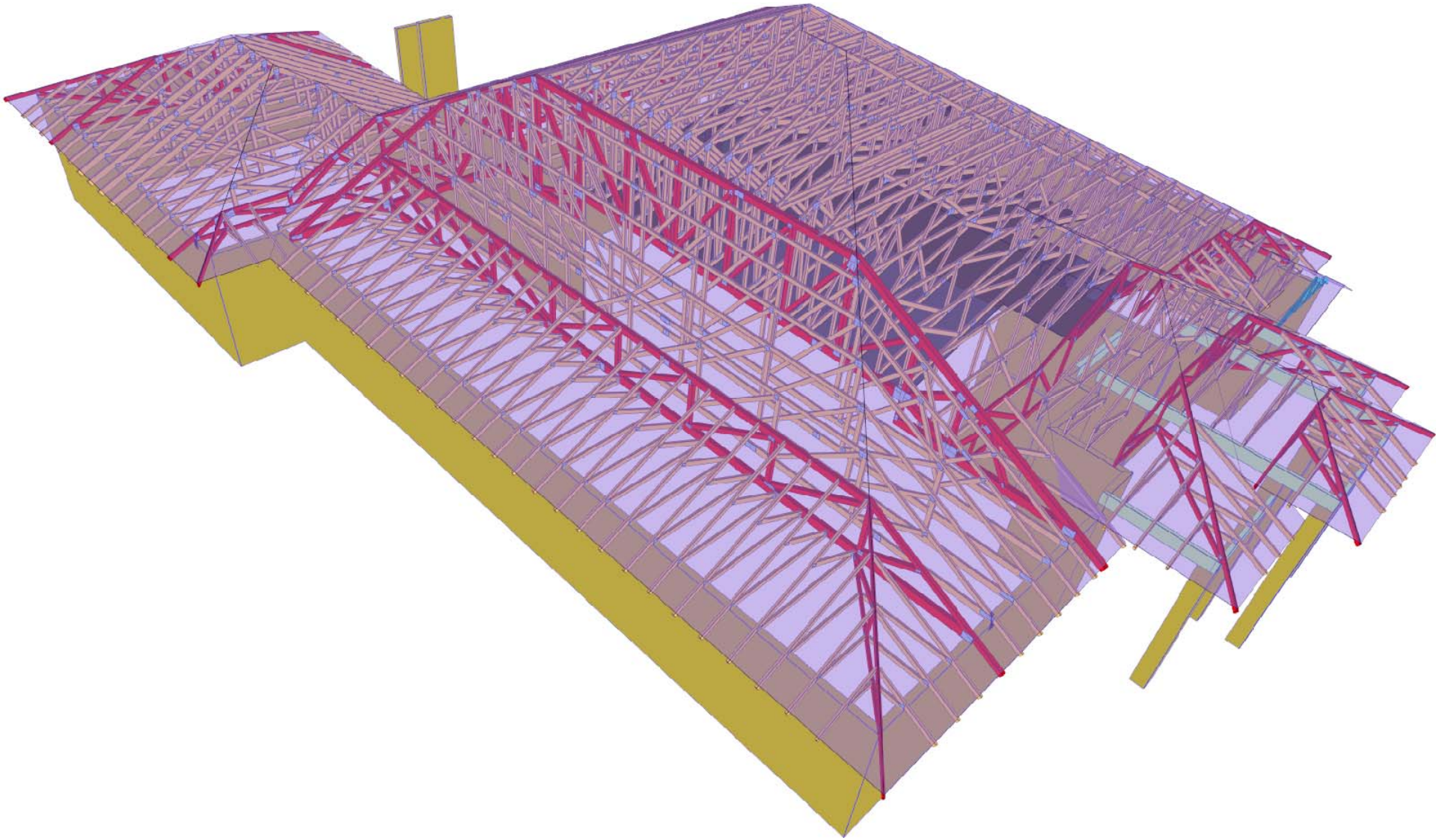

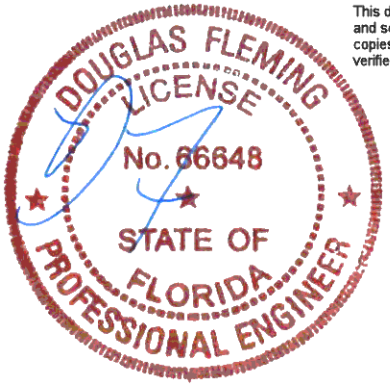

This document has been electronically signed and sealed using a Digital Signature. Printed copies without an original signature must be verified using the original electronic version.

COA #0 278
09/15/2020

Alpine, an ITW Company
6750 Forum Drive, Suite 305
Orlando, FL 32821
Phone: (800)755-6001
www.alpineitw.com

Site Information:	**Page 1:**
Customer: Seminole Trusses, Inc.	*Job Number:* b51385aa
Job Description: -terrell floor plan Trademark Const Group	
Address: LAKE CITY, FL	

Job Engineering Criteria:	
Design Code: FBC 2017 RES	*IntelliVIEW Version:* 18.02.01A *JRef #:* 1WYP8570001
Wind Standard: ASCE 7-10 *Wind Speed (mph):* 130 *Building Type:* Closed	*Roof Load (psf):* 20.00- 7.00- 0.00-10.00 *Floor Load (psf):* None

This package contains general notes pages, 83 truss drawing(s) and 8 detail(s).

Item	Drawing Number	Truss	Item	Drawing Number	Truss
1	259.20.0954.19973	CJ10	2	259.20.0954.21673	CJ2
3	259.20.1000.07680	CJ2A	4	259.20.1000.08957	CJ2B
5	259.20.1000.10080	CJ2C	6	259.20.1000.11263	CJ4A
7	259.20.1000.12483	CJ4B	8	259.20.1000.13773	CJ6
9	259.20.1000.15080	CJ6A	10	259.20.1000.16283	CJ8
11	259.20.1000.17457	CJ8A	12	259.20.1000.18950	CJG4
13	259.20.1000.20590	CJG4A	14	259.20.1000.22450	EJ4
15	259.20.1000.33967	EJ8	16	259.20.1000.35430	EJ8A
17	259.20.1000.37217	GE1	18	259.20.1000.38943	H0A
19	259.20.1000.40420	H10A	20	259.20.1000.41943	H10B
21	259.20.1000.43337	H12A	22	259.20.1000.45703	H16A
23	259.20.1000.51313	H18A	24	259.20.1000.53570	H7A
25	259.20.1001.15750	HG19A	26	259.20.1001.17690	HG4A
27	259.20.1001.19763	HG8A	28	259.20.0955.09213	HJ11
29	259.20.0956.06200	HJ11A	30	259.20.0956.53520	HJ3
31	259.20.0956.56127	HJ6	32	259.20.0956.57487	HJ6A
33	259.20.0957.32980	MH1	34	259.20.0957.36650	MH2
35	259.20.0957.53000	MH3	36	259.20.1003.33177	MHG1
37	259.20.1003.36530	MHG2	38	259.20.1003.40380	MHG3
39	259.20.1003.42170	S1	40	259.20.1003.43473	S2
41	259.20.1003.44933	S3	42	259.20.1003.47010	SG1
43	259.20.1003.49310	SG2	44	259.20.0952.08280	T-1
45	259.20.0952.10980	T-10	46	259.20.0952.12620	T-11
47	259.20.0952.14173	T-12	48	259.20.0952.16303	T-13
49	259.20.0952.18300	T-14	50	259.20.0952.20370	T-15
51	259.20.1003.52290	T-16	52	259.20.1003.55667	T-17

DOUGLAS FLEMING LICENSE No. 66648 STATE OF FLORIDA PROFESSIONAL ENGINEER

This document has been electronically signed and sealed using a Digital Signature. Printed copies without an original signature must be verified using the original electronic version.

COA #0 278
09/15/2020

Alpine, an ITW Company
6750 Forum Drive, Suite 305
Orlando, FL 32821
Phone: (800)755-6001
www.alpineitw.com

Site Information:	Page 2:
Customer: Seminole Trusses, Inc.	*Job Number:* b51385aa
Job Description: -terrell floor plan Trademark Const Group	
Address: LAKE CITY, FL	

Item	Drawing Number	Truss	Item	Drawing Number	Truss
53	259.20.1003.59333	T-18	54	259.20.1004.02190	T-19
55	259.20.1004.04213	T-2	56	259.20.1004.06017	T-20
57	259.20.0952.32133	T-21	58	259.20.0953.54987	T-22
59	259.20.1004.09010	T-23	60	259.20.1004.10523	T-24
61	259.20.1004.12557	T-25	62	259.20.1004.15400	T-26
63	259.20.1004.19380	T-27	64	259.20.1004.21480	T-28
65	259.20.0958.08773	T-29	66	259.20.0958.11013	T-3
67	259.20.0958.13110	T-30	68	259.20.0958.17357	T-31
69	259.20.0958.20883	T-32	70	259.20.0958.41857	T-33
71	259.20.0958.43487	T-34	72	259.20.0958.44917	T-35
73	259.20.0958.47337	T-36	74	259.20.0958.49987	T-37
75	259.20.0958.51703	T-38	76	259.20.0959.24297	T-4
77	259.20.0959.26437	T-5	78	259.20.0959.28533	T-6
79	259.20.0959.39700	T-7	80	259.20.0959.42830	T-8
81	259.20.0959.59100	T-9	82	259.20.1000.05767	TG-1
83	259.20.0954.17833	CJ4	84	PB160160118	
85	PB180160118		86	REPCHRD1014	
87	PB160101014		88	BRCLBSUB0119	
89	CNNAILSP1014		90	A14015ENC101014	
91	GBLLETIN0118				

Columbia County Building Department
Plans Reviewed for Code Compliance
State of Florida

General Notes

Truss Design Engineer Scope of Work, Design Assumptions and Design Responsibilities:
The design responsibilities assumed in the preparation of these design drawings are those specified in ANSI/TPI 1, Chapter 2; and the National Design Standard for Metal Plate Connected Wood Truss Construction, by the Truss Plate Institute. The truss component designs conform to the applicable provisions of ANSI/TPI 1 and NDS, the National Design Specification for Wood Construction by AWC. The truss component designs are based on the specified loading and dimension information furnished by others to the Truss Design Engineer. The Truss Design Engineer has no duty to independently verify the accuracy or completeness of the information provided by others and may rely on that information without liability. The responsibility for verification of that information remains with others neither employed nor controlled by the Truss Design Engineer. The Truss Design Engineer's seal and signature on the attached drawings, or cover page listing these drawings, indicates acceptance of professional engineering responsibility solely for the truss component designs and not for the technical information furnished by others which technical information and consequences thereof remain their sole responsibility.

The suitability and use of these drawings for any particular structure is the responsibility of the Building Designer in accordance with ANSI/TPI 1 Chapter 2. The Building Designer is responsible for determining that the dimensions and loads for each truss component match those required by the plans and by the actual use of the individual component, and for ascertaining that the loads shown on the drawings meet or exceed applicable building code requirements and any additional factors required in the particular application. Truss components using metal connector plates with integral teeth shall not be placed in environments that will cause the moisture content of the wood in which plates are embedded to exceed 19% and/or cause corrosion of connector plates and other metal fasteners.

The Truss Design Engineer shall not be responsible for items beyond the specific scope of the agreed contracted work set forth herein, including but not limited to: verifying the dimensions of the truss component, calculation of any of the truss component design loads, inspection of the truss components before or after installation, the design of temporary or permanent bracing and their attachment required in the roof and/or floor systems, the design of diaphragms or shear walls, the design of load transfer connections to and from diaphragms and shear walls, the design of load transfer to the foundation, the design of connections for truss components to their bearing supports, the design of the bearing supports, installation of the truss components, observation of the truss component installation process, review of truss assembly procedures, sequencing of the truss component installation, construction means and methods, site and/or worker safety in the installation of the truss components and/or its connections.

This document may be a high quality facsimile of the original engineering document which is a digitally signed electronic file with third party authentication. A wet or embossed seal copy of this engineering document is available upon request.

Temporary Lateral Restraint and Bracing:
Temporary lateral restraint and diagonal bracing shall be installed according to the provisions of BCSI chapters B1, B2, B7 and/or B10 (Building Component Safety Information, by TPI and SBCA), or as specified by the Building Designer or other Registered Design Professional. The required locations for lateral restraint and/or bracing depicted on these drawings are only for the permanent lateral support of the truss members to reduce buckling lengths, and do not apply to and may not be relied upon for the temporary stability of the truss components during their installation.

Permanent Lateral Restraint and Bracing:
The required locations for lateral restraint or bracing depicted on these drawings are for the permanent lateral support of the truss members to reduce buckling lengths. Permanent lateral support shall be installed according to the provisions of BCSI chapters B3, B7 and/or B10, or as specified by the Building Designer or other Registered Design Professional. These drawings do not depict or specify installation/erection bracing, wind bracing, portal bracing or similar building stability bracing which are parts of the overall building design to be specified, designed and detailed by the Building Designer.

Connector Plate Information:
Alpine connector plates are made of ASTM A653 or ASTM A1063 galvanized steel with the following designations, gauges and grades: W=Wave, 20ga, grade 40; H=High Strength, 20ga, grade 60; S=Super Strength, 18ga, grade 60. Information on model code compliance is contained in the ICC Evaluation Service report ESR-1118, available on-line at www.icc-es.org.

Fire Retardant Treated Lumber:
Fire retardant treated lumber must be properly re-dried and maintained below 19% or less moisture level through all stages of construction and usage. Fire retardant treated lumber may be more brittle than untreated lumber. Special handling care must be taken to prevent breakage during all handling activities.

General Notes (continued)

Key to Terms:
Information provided on drawings reflects a summary of the pertinent information required for the truss design. Detailed information on load cases, reactions, member lengths, forces and members requiring permanent lateral support may be found in calculation sheets available upon written request.

BCDL = Bottom Chord standard design Dead Load in pounds per square foot.
BCLL = Bottom Chord standard design Live Load in pounds per square foot.
CL = Certified lumber.
Des Ld = total of TCLL, TCDL, BCLL and BCDL Design Load in pounds per square foot.
FRT = Fire Retardant Treated lumber.
FRT-DB = D-Blaze Fire Retardant Treated lumber.
FRT-DC = Dricon Fire Retardant Treated lumber.
FRT-FP = FirePRO Fire Retardant Treated lumber.
FRT-FL = FlamePRO Fire Retardant Treated lumber.
FRT-FT = FlameTech Fire Retardant Treated lumber.
FRT-PG = PYRO-GUARD Fire Retardant Treated lumber.
g = green lumber.
HORZ(LL) = maximum Horizontal panel point deflection due to Live Load, in inches.
HORZ(TL) = maximum Horizontal panel point long term deflection in inches, due to Total Load, including creep adjustment.
HPL = additional Horizontal Load added to a truss Piece in pounds per linear foot or pounds.
Ic = Incised lumber.
FJ = Finger Jointed lumber.
L/# = user specified divisor for limiting span/deflection ratio for evaluation of actual L/defl value.
L/defl = ratio of Length between bearings, in inches, divided by the vertical Deflection due to creep, in inches, at the referenced panel point. Reported as 999 if greater than or equal to 999.
Loc = Location, starting location of left end of bearing or panel point (joint) location of deflection.
Max BC CSI = Maximum bending and axial Combined Stress Index for Bottom Chords for of all load cases.
Max TC CSI = Maximum bending and axial Combined Stress Index for Top Chords for of all load cases.
Max Web CSI= Maximum bending and axial Combined Stress Index for Webs for of all load cases.
NCBCLL = Non-Concurrent Bottom Chord design Live Load in pounds per square foot.
PL = additional Load applied at a user specified angle on a truss Piece in pounds per linear foot or pounds.
PLB = additional vertical load added to a Bottom chord Piece of a truss in pounds per linear foot or pounds
PLT = additional vertical load added to a Top chord Piece of a truss in pounds per linear foot or pounds.
PP = Panel Point.
R = maximum downward design Reaction, in pounds, from all specified gravity load cases, at the indicated location (Loc).
-R = maximum upward design Reaction, in pounds, from all specified gravity load cases, at the identified location (Loc).
Rh = maximum horizontal design Reaction in either direction, in pounds, from all specified gravity load cases, at the indicated location (Loc).
RL = maximum horizontal design Reaction in either direction, in pounds, from all specified non-gravity (wind or seismic) load cases, at the indicated location (Loc).
Rw = maximum downward design Reaction, in pounds, from all specified non-gravity (wind or seismic) load cases, at the identified location (Loc).
TCDL = Top Chord standard design Dead Load in pounds per square foot.
TCLL = Top Chord standard design Live Load in pounds per square foot.
U = maximum Upward design reaction, in pounds, from all specified non-gravity (wind or seismic) load cases, at the indicated location (Loc).
VERT(CL) = maximum Vertical panel point deflection in inches due to Live Load and Creep Component of Dead Load in inches.
VERT(CTL) = maximum Vertical panel point deflection ratios due to Live Load and Creep Component of Dead Load, and maximum long term Vertical panel point deflection in inches due to Total load, including creep adjustment.
VERT(LL) = maximum Vertical panel point deflection in inches due to Live Load.
VERT(TL) = maximum Vertical panel point long term deflection in inches due to Total load, including creep adjustment.
W = Width of non-hanger bearing, in inches.

Refer to ASCE-7 for Wind and Seismic abbreviations.
Uppercase Acronyms not explained above are as defined in TPI 1.

References:

1. AWC: American Wood Council; 222 Catoctin Circle SE, Suite 201; Leesburg, VA 20175; www.awc.org.
2. ICC: International Code Council; www.iccsafe.org.
3. Alpine, a division of ITW Building Components Group Inc.: 514 Earth City Expressway, Suite 242, Earth City, MO 63045; www.alpineitw.com.
4. TPI: Truss Plate Institute, 2670 Crain Highway, Suite 203, Waldorf, MD 20601; www.tpinst.org.
5. SBCA: Wood Truss Council of America, 6300 Enterprise Lane, Madison, WI 53719; www.sbcindustry.com.

SEQN: 65863 JACK FROM: RNB	Ply: 1 Qty: 1	**Job Number:** b51385aa -terrell floor plan Trademark Const Group **Truss Label:** CJ10	Cust: R 857 JRef:1WYP8570001 T33 DrwNo: 259.20.0954.19973 SSB / DF 09/15/2020

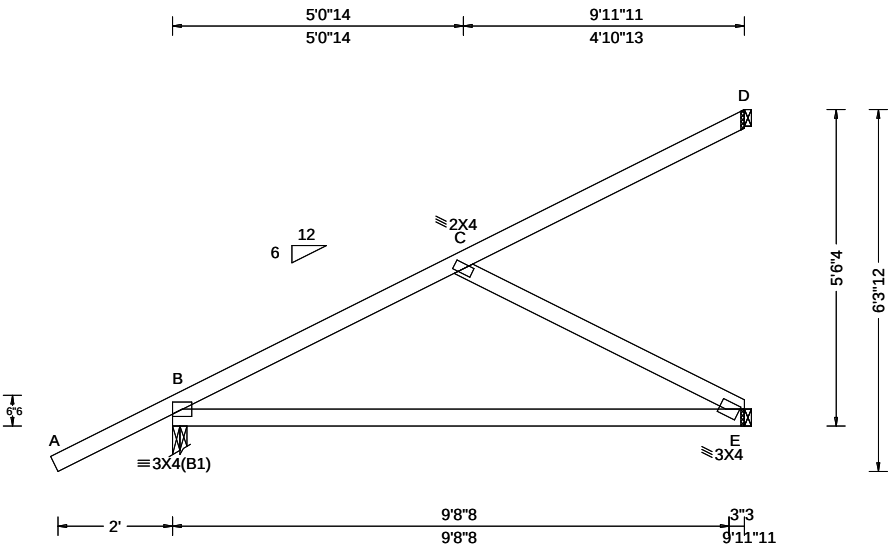

Loading Criteria (psf)

TCLL:	20.00
TCDL:	7.00
BCLL:	0.00
BCDL:	10.00
Des Ld:	37.00
NCBCLL:	10.00
Soffit:	2.00

Load Duration: 1.25
Spacing: 24.0 "

Wind Criteria
Wind Std: ASCE 7-10
Speed: 130 mph
Enclosure: Closed
Risk Category: II
EXP: B Kzt: NA
Mean Height: 15.00 ft
TCDL: 0.0 psf
BCDL: 0.0 psf
MWFRS Parallel Dist: h/2 to h
C&C Dist a: 3.00 ft
Loc. from endwall: not in 4.50 ft
GCpi: 0.18
Wind Duration: 1.60

Snow Criteria (Pg,Pf in PSF)
Pg: NA Ct: NA CAT: NA
Pf: NA Ce: NA
Lu: NA Cs: NA
Snow Duration: NA

Building Code:
FBC 2017 RES
TPI Std: 2014
Rep Fac: Yes
FT/RT:20(0)/0(0)
Plate Type(s):
WAVE

Defl/CSI Criteria

PP Deflection in	loc	L/defl	L/#
VERT(LL): -0.006	C	999	360
VERT(CL): -0.019	C	999	240
HORZ(LL): -0.005	E	-	-
HORZ(TL): 0.015	E	-	-

Creep Factor: 2.0
Max TC CSI: 0.681
Max BC CSI: 0.388
Max Web CSI: 0.224

VIEW Ver: 18.02.01A.0205.19

▲Maximum Reactions (lbs)

	Gravity			Non-Gravity		
Loc	R+	/ R-	/ Rh	/ Rw	/ U	/ RL
B	515	/-	/-	/297	/133	/139
E	252	/-	/-	/172	/86	/-
D	112	/-	/-	/53	/60	/-

Wind reactions based on MWFRS
B Brg Width = 3.0 Min Req = 1.5
E Brg Width = 1.5 Min Req = -
D Brg Width = 1.5 Min Req = -
Bearing B Fcperp = 425psi.
Members not listed have forces less than 375#

Maximum Top Chord Forces Per Ply (lbs)

Chords	Tens.	Comp.
B - C	90	-388

Lumber
Top chord: 2x4 SP #1;
Bot chord: 2x4 SP SS Dense;
Webs: 2x4 SP #3;

Plating Notes
Plates sized for a minimum of 3.50 sq.in./piece.

Purlins
In lieu of structural panels or rigid ceiling use purlins to laterally brace chords as follows:

Chord	Spacing(in oc)	Start(ft)	End(ft)
TC	75	-2.07	9.97
BC	75	0.17	9.81

Apply purlins to any chords above or below fillers at 24" OC unless shown otherwise above.

Wind
Wind loads based on MWFRS with additional C&C member design.

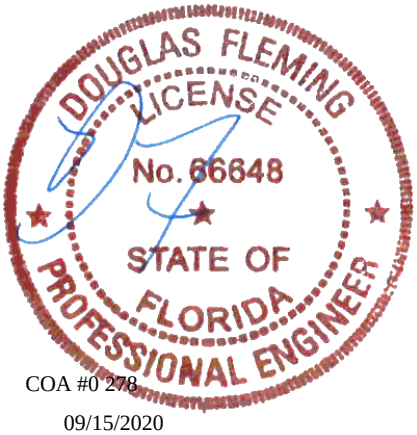

COA #0 278

09/15/2020

****WARNING**** READ AND FOLLOW ALL NOTES ON THIS DRAWING!
****IMPORTANT**** FURNISH THIS DRAWING TO ALL CONTRACTORS INCLUDING THE INSTALLERS

Trusses require extreme care in fabricating, handling, shipping, installing and bracing. Refer to and follow the latest edition of BCSI (Building Component Safety Information, by TPI and SBCA) for safety practices prior to performing these functions. Installers shall provide temporary bracing per BCSI. Unless noted otherwise, top chord shall have properly attached structural sheathing and bottom chord shall have a properly attached rigid ceiling. Locations shown for permanent lateral restraint of webs shall have bracing installed per BCSI sections B3, B7, or B10, as applicable. Apply plates to each face of truss and position as shown above and on the Joint Details, unless noted otherwise. Refer to drawings 160A-Z for standard plate positions. Refer to job's General Notes page for additional information.

Alpine, a division of ITW Building Components Group Inc. shall not be responsible for any deviation from this drawing, any failure to build the truss in conformance with ANSI/TPI 1, or for handling, shipping, installation and bracing of trusses. A seal on this drawing or cover page listing this drawing, indicates acceptance of professional engineering responsibility solely for the design shown. The suitability and use of this drawing for any structure is the responsibility of the Building Designer per ANSI/TPI 1 Sec.2.

For more information see these web sites: Alpine: www.alpineitw.com; TPI: www.tpinst.org; SBCA: www.sbcindustry.com; ICC: www.iccsafe.org

ALPINE AN ITW COMPANY
6750 Forum Drive
Suite 305
Orlando FL, 32821

SEQN: 65864 JACK FROM: RNB	Ply: 1 Qty: 14	**Job Number:** b51385aa -terrell floor plan Trademark Const Group **Truss Label:** CJ2	Cust: R 857 JRef:1WYP8570001 T16 DrwNo: 259.20.0954.21673 SSB / DF 09/15/2020

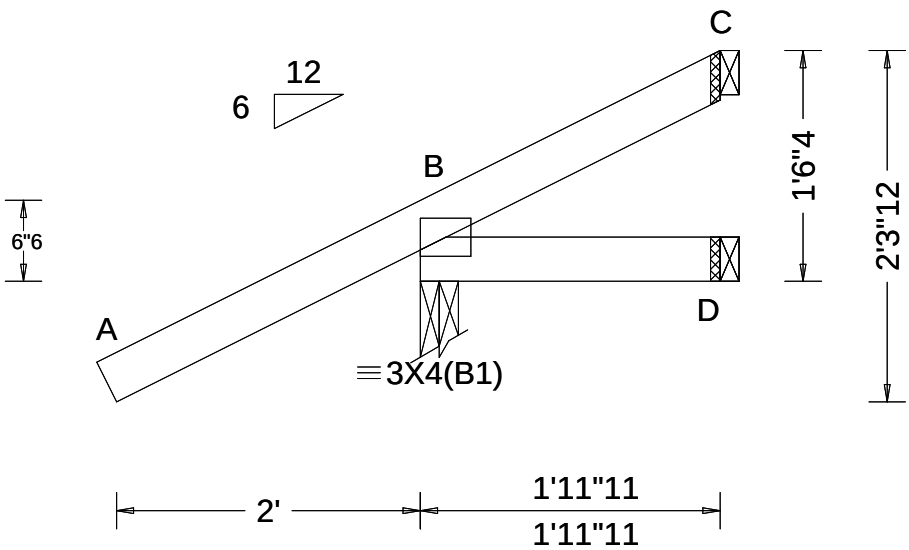

Loading Criteria (psf)
TCLL: 20.00
TCDL: 7.00
BCLL: 0.00
BCDL: 10.00
Des Ld: 37.00
NCBCLL: 10.00
Soffit: 2.00
Load Duration: 1.25
Spacing: 24.0 "

Wind Criteria
Wind Std: ASCE 7-10
Speed: 130 mph
Enclosure: Closed
Risk Category: II
EXP: B Kzt: NA
Mean Height: 15.00 ft
TCDL: 0.0 psf
BCDL: 0.0 psf
MWFRS Parallel Dist: 0 to h/2
C&C Dist a: 3.00 ft
Loc. from endwall: Any
GCpi: 0.18
Wind Duration: 1.60

Snow Criteria (Pg,Pf in PSF)
Pg: NA Ct: NA CAT: NA
Pf: NA Ce: NA
Lu: NA Cs: NA
Snow Duration: NA

Building Code:
FBC 2017 RES
TPI Std: 2014
Rep Fac: Yes
FT/RT:20(0)/0(0)
Plate Type(s):
WAVE

Defl/CSI Criteria
PP Deflection in loc L/defl L/#
VERT(LL): NA
VERT(CL): NA
HORZ(LL): -0.001 C - -
HORZ(TL): 0.002 C - -
Creep Factor: 2.0
Max TC CSI: 0.410
Max BC CSI: 0.057
Max Web CSI: 0.000

VIEW Ver: 18.02.01A.0205.19

▲Maximum Reactions (lbs)

	Gravity			Non-Gravity		
Loc	R+	/ R-	/ Rh	/ Rw	/ U	/ RL
B	276	/-	/-	/171	/89	/44
D	32	/-	/-	/16	/6	/-
C	-	/-7	/-	/25	/25	/-

Wind reactions based on MWFRS
B Brg Width = 3.0 Min Req = 1.5
D Brg Width = 1.5 Min Req = -
C Brg Width = 1.5 Min Req = -
Bearing B Fcperp = 425psi.
Members not listed have forces less than 375#

Lumber
Top chord: 2x4 SP #1;
Bot chord: 2x4 SP #1;

Plating Notes
Plates sized for a minimum of 3.50 sq.in./piece.

Purlins
In lieu of structural panels or rigid ceiling use purlins to laterally brace chords as follows:

Chord	Spacing(in oc)	Start(ft)	End(ft)
TC	54	-2.07	1.97
BC	22	0.17	1.97

Apply purlins to any chords above or below fillers at 24" OC unless shown otherwise above.

Wind
Wind loads based on MWFRS with additional C&C member design.

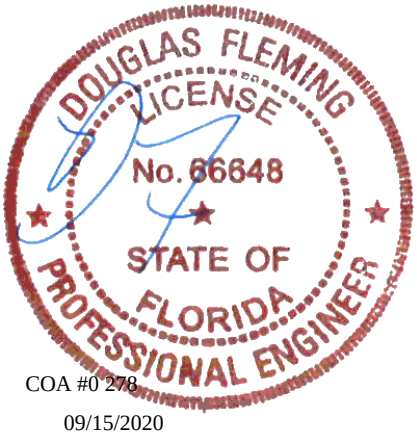

COA #0 278

09/15/2020

****WARNING**** READ AND FOLLOW ALL NOTES ON THIS DRAWING!
****IMPORTANT**** FURNISH THIS DRAWING TO ALL CONTRACTORS INCLUDING THE INSTALLERS

Trusses require extreme care in fabricating, handling, shipping, installing and bracing. Refer to and follow the latest edition of BCSI (Building Component Safety Information, by TPI and SBCA) for safety practices prior to performing these functions. Installers shall provide temporary bracing per BCSI. Unless noted otherwise, top chord shall have properly attached structural sheathing and bottom chord shall have a properly attached rigid ceiling. Locations shown for permanent lateral restraint of webs shall have bracing installed per BCSI sections B3, B7, or B10, as applicable. Apply plates to each face of truss and position as shown above and on the Joint Details, unless noted otherwise. Refer to drawings 160A-Z for standard plate positions. Refer to job's General Notes page for additional information.

Alpine, a division of ITW Building Components Group Inc. shall not be responsible for any deviation from this drawing, any failure to build the truss in conformance with ANSI/TPI 1, or for handling, shipping, installation and bracing of trusses. A seal on this drawing or cover page listing this drawing, indicates acceptance of professional engineering responsibility solely for the design shown. The suitability and use of this drawing for any structure is the responsibility of the Building Designer per ANSI/TPI 1 Sec.2.

For more information see these web sites: Alpine: www.alpineitw.com; TPI: www.tpinst.org; SBCA: www.sbcindustry.com; ICC: www.iccsafe.org

ALPINE AN ITW COMPANY
6750 Forum Drive
Suite 305
Orlando FL, 32821

SEQN: 65865 JACK FROM: RNB	Ply: 1 Qty: 1	**Job Number:** b51385aa -terrell floor plan Trademark Const Group **Truss Label:** CJ2A	Cust: R 857 JRef:1WYP8570001 T36 DrwNo: 259.20.1000.07680 SSB / DF 09/15/2020

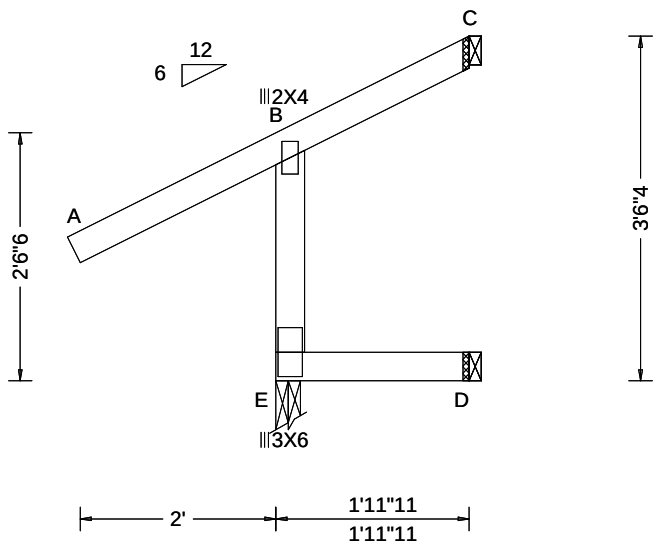

Loading Criteria (psf)

TCLL:	20.00
TCDL:	7.00
BCLL:	0.00
BCDL:	10.00
Des Ld:	37.00
NCBCLL:	10.00
Soffit:	2.00

Load Duration: 1.25
Spacing: 24.0 "

Wind Criteria
Wind Std: ASCE 7-10
Speed: 130 mph
Enclosure: Closed
Risk Category: II
EXP: B Kzt: NA
Mean Height: 15.00 ft
TCDL: 0.0 psf
BCDL: 0.0 psf
MWFRS Parallel Dist: h/2 to h
C&C Dist a: 3.00 ft
Loc. from endwall: not in 4.50 ft
GCpi: 0.18
Wind Duration: 1.60

Snow Criteria (Pg,Pf in PSF)
Pg: NA Ct: NA CAT: NA
Pf: NA Ce: NA
Lu: NA Cs: NA
Snow Duration: NA

Building Code:
FBC 2017 RES
TPI Std: 2014
Rep Fac: Yes
FT/RT:20(0)/0(0)
Plate Type(s):
WAVE

Defl/CSI Criteria

PP Deflection in	loc	L/defl	L/#
VERT(LL): 0.001	B	999	360
VERT(CL): 0.001	B	999	240
HORZ(LL): -0.000	B	-	-
HORZ(TL): 0.001	B	-	-

Creep Factor: 2.0
Max TC CSI: 0.244
Max BC CSI: 0.033
Max Web CSI: 0.157

VIEW Ver: 18.02.01A.0205.19

▲Maximum Reactions (lbs)

	Gravity			Non-Gravity		
Loc	R+	/ R-	/ Rh	/ Rw	/ U	/ RL
E	264	/-	/-	/192	/115	/-
D	39	/-	/-	/20	/-	/21
C	-	/-10	/-	/32	/47	/62

Wind reactions based on MWFRS
E Brg Width = 3.0 Min Req = 1.5
D Brg Width = 1.5 Min Req = -
C Brg Width = 1.5 Min Req = -
Bearing E Fcperp = 425psi.
Members not listed have forces less than 375#

Lumber

Top chord: 2x4 SP #1;
Bot chord: 2x4 SP #1;
Webs: 2x4 SP #3;

Plating Notes

Plates sized for a minimum of 3.50 sq.in./piece.

Purlins

In lieu of structural panels or rigid ceiling use purlins to laterally brace chords as follows:

Chord	Spacing(in oc)	Start(ft)	End(ft)
TC	54	-2.07	1.97
BC	24	0.00	1.97

Apply purlins to any chords above or below fillers at 24" OC unless shown otherwise above.

Wind

Wind loads based on MWFRS with additional C&C member design.

Left end vertical exposed to wind pressure. Deflection meets L/180.

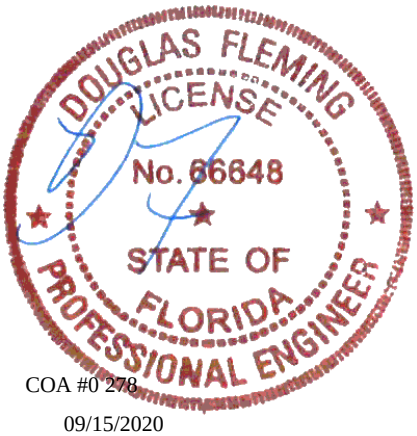

COA #0 278

09/15/2020

****WARNING**** READ AND FOLLOW ALL NOTES ON THIS DRAWING!
****IMPORTANT**** FURNISH THIS DRAWING TO ALL CONTRACTORS INCLUDING THE INSTALLERS

Trusses require extreme care in fabricating, handling, shipping, installing and bracing. Refer to and follow the latest edition of BCSI (Building Component Safety Information, by TPI and SBCA) for safety practices prior to performing these functions. Installers shall provide temporary bracing per BCSI. Unless noted otherwise, top chord shall have properly attached structural sheathing and bottom chord shall have a properly attached rigid ceiling. Locations shown for permanent lateral restraint of webs shall have bracing installed per BCSI sections B3, B7, or B10, as applicable. Apply plates to each face of truss and position as shown above and on the Joint Details, unless noted otherwise. Refer to drawings 160A-Z for standard plate positions. Refer to job's General Notes page for additional information.

Alpine, a division of ITW Building Components Group Inc. shall not be responsible for any deviation from this drawing, any failure to build the truss in conformance with ANSI/TPI 1, or for handling, shipping, installation and bracing of trusses. A seal on this drawing or cover page listing this drawing, indicates acceptance of professional engineering responsibility solely for the design shown. The suitability and use of this drawing for any structure is the responsibility of the Building Designer per ANSI/TPI 1 Sec.2.

For more information see these web sites: Alpine: www.alpineitw.com; TPI: www.tpinst.org; SBCA: www.sbcindustry.com; ICC: www.iccsafe.org

ALPINE
AN ITW COMPANY
6750 Forum Drive
Suite 305
Orlando FL, 32821

SEQN: 65866 JACK FROM: RNB	Ply: 1 Qty: 2	**Job Number:** b51385aa -terrell floor plan Trademark Const Group **Truss Label:** CJ2B	Cust: R 857 JRef:1WYP8570001 T60 DrwNo: 259.20.1000.08957 SSB / DF 09/15/2020

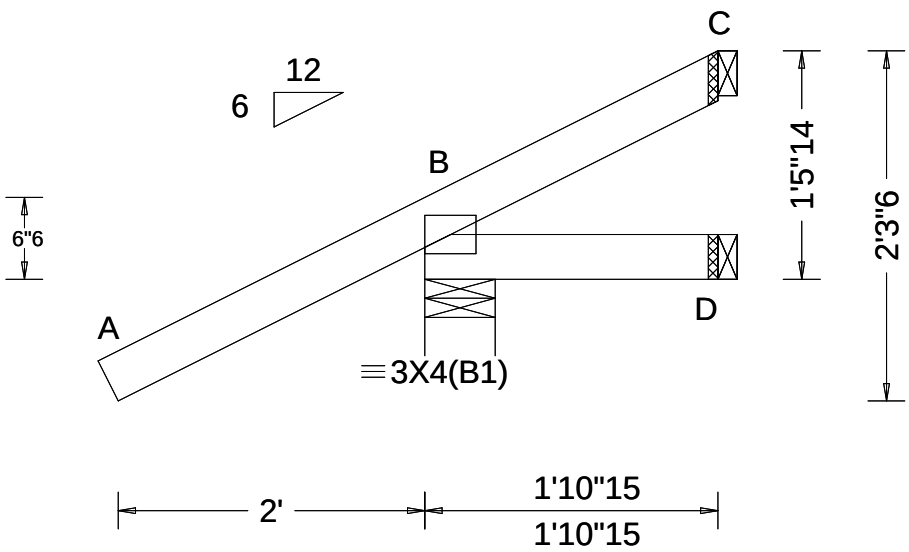

Loading Criteria (psf)
TCLL: 20.00
TCDL: 7.00
BCLL: 0.00
BCDL: 10.00
Des Ld: 37.00
NCBCLL: 10.00
Soffit: 2.00
Load Duration: 1.25
Spacing: 24.0 "

Wind Criteria
Wind Std: ASCE 7-10
Speed: 130 mph
Enclosure: Closed
Risk Category: II
EXP: B Kzt: NA
Mean Height: 15.00 ft
TCDL: 0.0 psf
BCDL: 0.0 psf
MWFRS Parallel Dist: 0 to h/2
C&C Dist a: 3.00 ft
Loc. from endwall: Any
GCpi: 0.18
Wind Duration: 1.60

Snow Criteria (Pg,Pf in PSF)
Pg: NA Ct: NA CAT: NA
Pf: NA Ce: NA
Lu: NA Cs: NA
Snow Duration: NA

Building Code:
FBC 2017 RES
TPI Std: 2014
Rep Fac: Yes
FT/RT:20(0)/0(0)
Plate Type(s):
WAVE

Defl/CSI Criteria
PP Deflection in loc L/defl L/#
VERT(LL): NA
VERT(CL): NA
HORZ(LL): -0.001 C - -
HORZ(TL): 0.002 C - -
Creep Factor: 2.0
Max TC CSI: 0.410
Max BC CSI: 0.057
Max Web CSI: 0.000

VIEW Ver: 18.02.01A.0205.19

▲Maximum Reactions (lbs)

	Gravity			Non-Gravity		
Loc	R+	/ R-	/ Rh	/ Rw	/ U	/ RL
B	276	/-	/-	/171	/90	/43
D	30	/-	/-	/15	/7	/-
C	-	/-11	/-	/26	/26	/-

Wind reactions based on MWFRS
B Brg Width = 5.5 Min Req = 1.5
D Brg Width = 1.5 Min Req = -
C Brg Width = 1.5 Min Req = -
Bearing B Fcperp = 425psi.
Members not listed have forces less than 375#

Lumber
Top chord: 2x4 SP #1;
Bot chord: 2x4 SP #1;

Plating Notes
Plates sized for a minimum of 3.50 sq.in./piece.

Purlins
In lieu of structural panels or rigid ceiling use purlins to laterally brace chords as follows:

Chord	Spacing(in oc)	Start(ft)	End(ft)
TC	53	-2.07	1.91
BC	21	0.17	1.91

Apply purlins to any chords above or below fillers at 24" OC unless shown otherwise above.

Wind
Wind loads based on MWFRS with additional C&C member design.

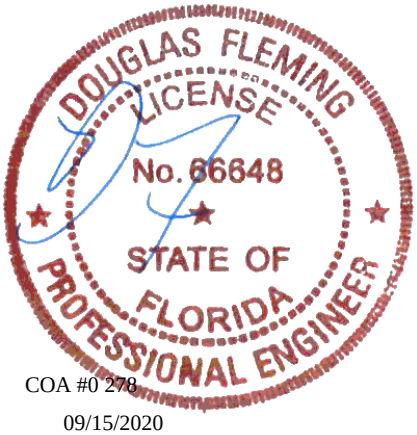

COA #0 278

09/15/2020

****WARNING**** READ AND FOLLOW ALL NOTES ON THIS DRAWING!
****IMPORTANT**** FURNISH THIS DRAWING TO ALL CONTRACTORS INCLUDING THE INSTALLERS

Trusses require extreme care in fabricating, handling, shipping, installing and bracing. Refer to and follow the latest edition of BCSI (Building Component Safety Information, by TPI and SBCA) for safety practices prior to performing these functions. Installers shall provide temporary bracing per BCSI. Unless noted otherwise, top chord shall have properly attached structural sheathing and bottom chord shall have a properly attached rigid ceiling. Locations shown for permanent lateral restraint of webs shall have bracing installed per BCSI sections B3, B7, or B10, as applicable. Apply plates to each face of truss and position as shown above and on the Joint Details, unless noted otherwise. Refer to drawings 160A-Z for standard plate positions. Refer to job's General Notes page for additional information.

Alpine, a division of ITW Building Components Group Inc. shall not be responsible for any deviation from this drawing, any failure to build the truss in conformance with ANSI/TPI 1, or for handling, shipping, installation and bracing of trusses. A seal on this drawing or cover page listing this drawing, indicates acceptance of professional engineering responsibility solely for the design shown. The suitability and use of this drawing for any structure is the responsibility of the Building Designer per ANSI/TPI 1 Sec.2.

For more information see these web sites: Alpine: www.alpineitw.com; TPI: www.tpinst.org; SBCA: www.sbcindustry.com; ICC: www.iccsafe.org

ALPINE AN ITW COMPANY
6750 Forum Drive
Suite 305
Orlando FL, 32821

SEQN: 65867 JACK FROM: RNB	Ply: 1 Qty: 2	**Job Number:** b51385aa -terrell floor plan Trademark Const Group **Truss Label:** CJ2C	Cust: R 857 JRef:1WYP8570001 T10 DrwNo: 259.20.1000.10080 SSB / DF 09/15/2020

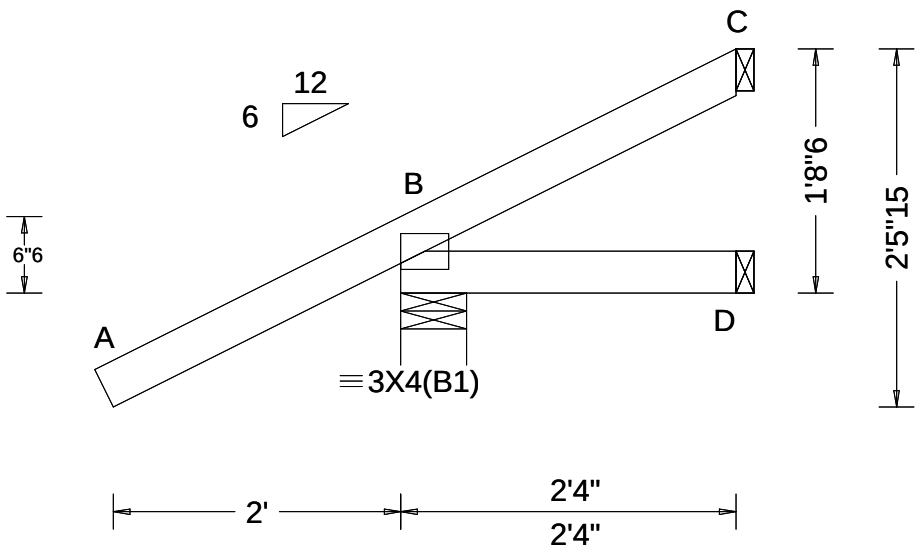

Loading Criteria (psf)
TCLL: 20.00
TCDL: 7.00
BCLL: 0.00
BCDL: 10.00
Des Ld: 37.00
NCBCLL: 10.00
Soffit: 2.00
Load Duration: 1.25
Spacing: 24.0 "

Wind Criteria
Wind Std: ASCE 7-10
Speed: 130 mph
Enclosure: Closed
Risk Category: II
EXP: B Kzt: NA
Mean Height: 15.00 ft
TCDL: 0.0 psf
BCDL: 0.0 psf
MWFRS Parallel Dist: 0 to h/2
C&C Dist a: 3.00 ft
Loc. from endwall: Any
GCpi: 0.18
Wind Duration: 1.60

Snow Criteria (Pg,Pf in PSF)
Pg: NA Ct: NA CAT: NA
Pf: NA Ce: NA
Lu: NA Cs: NA
Snow Duration: NA

Building Code:
FBC 2017 RES
TPI Std: 2014
Rep Fac: Yes
FT/RT:20(0)/0(0)
Plate Type(s):
WAVE

Defl/CSI Criteria
PP Deflection in loc L/defl L/#
VERT(LL): NA
VERT(CL): NA
HORZ(LL): -0.001 C - -
HORZ(TL): 0.002 C - -
Creep Factor: 2.0
Max TC CSI: 0.410
Max BC CSI: 0.060
Max Web CSI: 0.000

VIEW Ver: 18.02.01A.0205.19

▲Maximum Reactions (lbs)

	Gravity			Non-Gravity		
Loc	R+	/ R-	/ Rh	/ Rw	/ U	/ RL
B	277	/-	/-	/170	/85	/48
D	39	/-	/-	/20	/6	/-
C	13	/-	/-	/20	/20	/-

Wind reactions based on MWFRS
B Brg Width = 5.5 Min Req = 1.5
D Brg Width = 1.5 Min Req = -
C Brg Width = 1.5 Min Req = -
Bearing B Fcperp = 425psi.
Members not listed have forces less than 375#

Lumber
Top chord: 2x4 SP #1;
Bot chord: 2x4 SP #1;

Plating Notes
Plates sized for a minimum of 3.50 sq.in./piece.

Purlins
In lieu of structural panels or rigid ceiling use purlins to laterally brace chords as follows:

Chord	Spacing(in oc)	Start(ft)	End(ft)
TC	59	-2.07	2.33
BC	26	0.17	2.33

Apply purlins to any chords above or below fillers at 24" OC unless shown otherwise above.

Wind
Wind loads based on MWFRS with additional C&C member design.

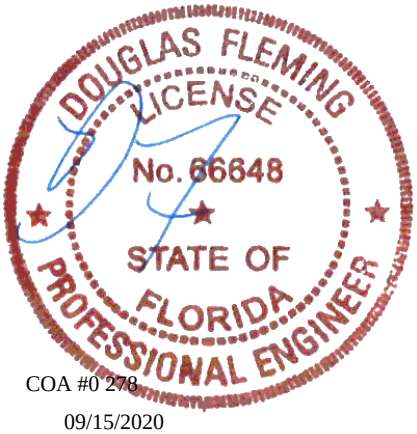

COA #0 278

09/15/2020

****WARNING**** READ AND FOLLOW ALL NOTES ON THIS DRAWING!
****IMPORTANT**** FURNISH THIS DRAWING TO ALL CONTRACTORS INCLUDING THE INSTALLERS

Trusses require extreme care in fabricating, handling, shipping, installing and bracing. Refer to and follow the latest edition of BCSI (Building Component Safety Information, by TPI and SBCA) for safety practices prior to performing these functions. Installers shall provide temporary bracing per BCSI. Unless noted otherwise, top chord shall have properly attached structural sheathing and bottom chord shall have a properly attached rigid ceiling. Locations shown for permanent lateral restraint of webs shall have bracing installed per BCSI sections B3, B7, or B10, as applicable. Apply plates to each face of truss and position as shown above and on the Joint Details, unless noted otherwise. Refer to drawings 160A-Z for standard plate positions. Refer to job's General Notes page for additional information.

Alpine, a division of ITW Building Components Group Inc. shall not be responsible for any deviation from this drawing, any failure to build the truss in conformance with ANSI/TPI 1, or for handling, shipping, installation and bracing of trusses. A seal on this drawing or cover page listing this drawing, indicates acceptance of professional engineering responsibility solely for the design shown. The suitability and use of this drawing for any structure is the responsibility of the Building Designer per ANSI/TPI 1 Sec.2.

For more information see these web sites: Alpine: www.alpineitw.com; TPI: www.tpinst.org; SBCA: www.sbcindustry.com; ICC: www.iccsafe.org

ALPINE AN ITW COMPANY
6750 Forum Drive
Suite 305
Orlando FL, 32821

SEQN: 65868 JACK FROM: RNB	Ply: 1 Qty: 1	**Job Number:** b51385aa -terrell floor plan Trademark Const Group **Truss Label:** CJ4A	Cust: R 857 JRef:1WYP8570001 T35 DrwNo: 259.20.1000.11263 SSB / DF 09/15/2020

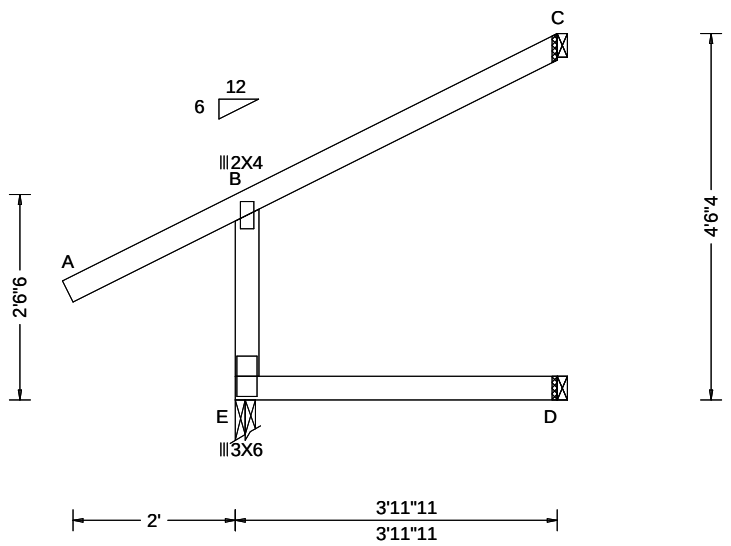

Loading Criteria (psf)

TCLL: 20.00
TCDL: 7.00
BCLL: 0.00
BCDL: 10.00
Des Ld: 37.00
NCBCLL: 10.00
Soffit: 2.00
Load Duration: 1.25
Spacing: 24.0 "

Wind Criteria

Wind Std: ASCE 7-10
Speed: 130 mph
Enclosure: Closed
Risk Category: II
EXP: B Kzt: NA
Mean Height: 15.00 ft
TCDL: 0.0 psf
BCDL: 0.0 psf
MWFRS Parallel Dist: h/2 to h
C&C Dist a: 3.00 ft
Loc. from endwall: not in 9.00 ft
GCpi: 0.18
Wind Duration: 1.60

Snow Criteria (Pg,Pf in PSF)

Pg: NA Ct: NA CAT: NA
Pf: NA Ce: NA
Lu: NA Cs: NA
Snow Duration: NA

Building Code:
FBC 2017 RES
TPI Std: 2014
Rep Fac: Yes
FT/RT:20(0)/0(0)
Plate Type(s):
WAVE

Defl/CSI Criteria

PP Deflection in	loc	L/defl	L/#
VERT(LL): 0.001	B	999	360
VERT(CL): 0.001	B	999	240
HORZ(LL): -0.001	B	-	-
HORZ(TL): 0.001	B	-	-

Creep Factor: 2.0
Max TC CSI: 0.257
Max BC CSI: 0.144
Max Web CSI: 0.167

VIEW Ver: 18.02.01A.0205.19

▲Maximum Reactions (lbs)

	Gravity			Non-Gravity		
Loc	R+	/ R-	/ Rh	/ Rw	/ U	/ RL
E	307	/-	/-	/215	/132	/-
D	79	/-	/-	/40	/-	/21
C	78	/-	/-	/33	/32	/86

Wind reactions based on MWFRS
E Brg Width = 3.0 Min Req = 1.5
D Brg Width = 1.5 Min Req = -
C Brg Width = 1.5 Min Req = -
Bearing E Fcperp = 425psi.
Members not listed have forces less than 375#

Lumber

Top chord: 2x4 SP #1;
Bot chord: 2x4 SP #1;
Webs: 2x4 SP #3;

Plating Notes

Plates sized for a minimum of 3.50 sq.in./piece.

Purlins

In lieu of structural panels or rigid ceiling use purlins to laterally brace chords as follows:

Chord	Spacing(in oc)	Start(ft)	End(ft)
TC	75	-2.07	3.97
BC	48	0.00	3.97

Apply purlins to any chords above or below fillers at 24" OC unless shown otherwise above.

Wind

Wind loads based on MWFRS with additional C&C member design.

Left end vertical exposed to wind pressure. Deflection meets L/180.

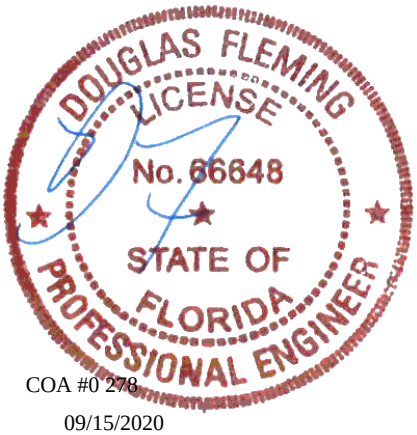

COA #0 278

09/15/2020

****WARNING**** READ AND FOLLOW ALL NOTES ON THIS DRAWING!
****IMPORTANT**** FURNISH THIS DRAWING TO ALL CONTRACTORS INCLUDING THE INSTALLERS

Trusses require extreme care in fabricating, handling, shipping, installing and bracing. Refer to and follow the latest edition of BCSI (Building Component Safety Information, by TPI and SBCA) for safety practices prior to performing these functions. Installers shall provide temporary bracing per BCSI. Unless noted otherwise, top chord shall have properly attached structural sheathing and bottom chord shall have a properly attached rigid ceiling. Locations shown for permanent lateral restraint of webs shall have bracing installed per BCSI sections B3, B7, or B10, as applicable. Apply plates to each face of truss and position as shown above and on the Joint Details, unless noted otherwise. Refer to drawings 160A-Z for standard plate positions. Refer to job's General Notes page for additional information.

Alpine, a division of ITW Building Components Group Inc. shall not be responsible for any deviation from this drawing, any failure to build the truss in conformance with ANSI/TPI 1, or for handling, shipping, installation and bracing of trusses. A seal on this drawing or cover page listing this drawing, indicates acceptance of professional engineering responsibility solely for the design shown. The suitability and use of this drawing for any structure is the responsibility of the Building Designer per ANSI/TPI 1 Sec.2.

For more information see these web sites: Alpine: www.alpineitw.com; TPI: www.tpinst.org; SBCA: www.sbcindustry.com; ICC: www.iccsafe.org

ALPINE AN ITW COMPANY
6750 Forum Drive
Suite 305
Orlando FL, 32821

SEQN: 65869 JACK FROM: RNB	Ply: 1 Qty: 5	**Job Number:** b51385aa -terrell floor plan Trademark Const Group **Truss Label:** CJ4B	Cust: R 857 JRef:1WYP8570001 T69 DrwNo: 259.20.1000.12483 SSB / DF 09/15/2020

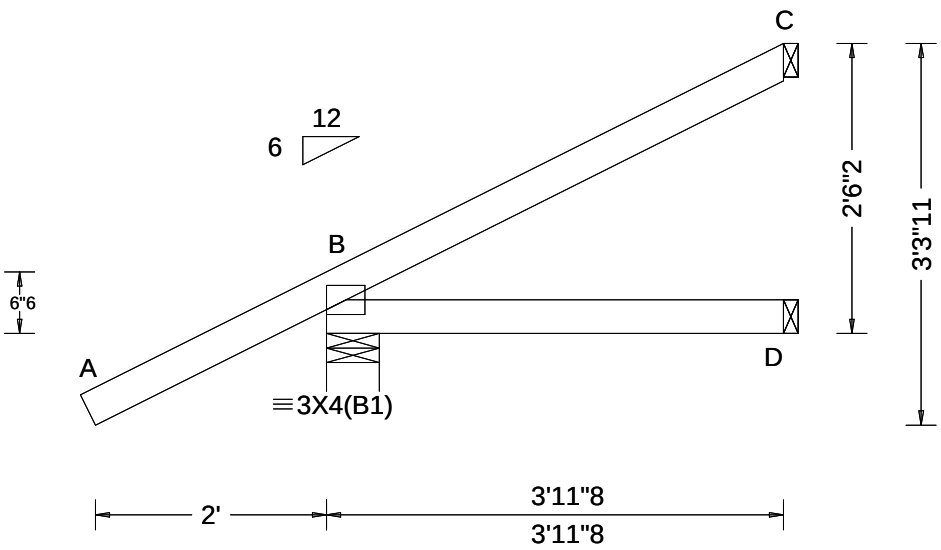

Loading Criteria (psf)
TCLL: 20.00
TCDL: 7.00
BCLL: 0.00
BCDL: 10.00
Des Ld: 37.00
NCBCLL: 10.00
Soffit: 2.00
Load Duration: 1.25
Spacing: 24.0 "

Wind Criteria
Wind Std: ASCE 7-10
Speed: 130 mph
Enclosure: Closed
Risk Category: II
EXP: B Kzt: NA
Mean Height: 15.00 ft
TCDL: 0.0 psf
BCDL: 0.0 psf
MWFRS Parallel Dist: h to 2h
C&C Dist a: 3.00 ft
Loc. from endwall: not in 9.00 ft
GCpi: 0.18
Wind Duration: 1.60

Snow Criteria (Pg,Pf in PSF)
Pg: NA Ct: NA CAT: NA
Pf: NA Ce: NA
Lu: NA Cs: NA
Snow Duration: NA

Building Code:
FBC 2017 RES
TPI Std: 2014
Rep Fac: Yes
FT/RT:20(0)/0(0)
Plate Type(s):
WAVE

Defl/CSI Criteria
PP Deflection in loc L/defl L/#
VERT(LL): NA
VERT(CL): NA
HORZ(LL): 0.002 D - -
HORZ(TL): 0.002 D - -
Creep Factor: 2.0
Max TC CSI: 0.244
Max BC CSI: 0.115
Max Web CSI: 0.000

VIEW Ver: 18.02.01A.0205.19

▲Maximum Reactions (lbs)

	Gravity			Non-Gravity		
Loc	R+	/ R-	/ Rh	/ Rw	/ U	/ RL
B	313	/-	/-	/187	/80	/48
D	71	/-	/-	/37	/4	/-
C	77	/-	/-	/34	/34	/-

Wind reactions based on MWFRS
B Brg Width = 5.5 Min Req = 1.5
D Brg Width = 1.5 Min Req = -
C Brg Width = 1.5 Min Req = -
Bearing B Fcperp = 425psi.
Members not listed have forces less than 375#

Lumber
Top chord: 2x4 SP #1;
Bot chord: 2x4 SP #1;

Plating Notes
Plates sized for a minimum of 3.50 sq.in./piece.

Purlins
In lieu of structural panels or rigid ceiling use purlins to laterally brace chords as follows:

Chord	Spacing(in oc)	Start(ft)	End(ft)
TC	75	-2.07	3.96
BC	45	0.17	3.96

Apply purlins to any chords above or below fillers at 24" OC unless shown otherwise above.

Wind
Wind loads based on MWFRS with additional C&C member design.

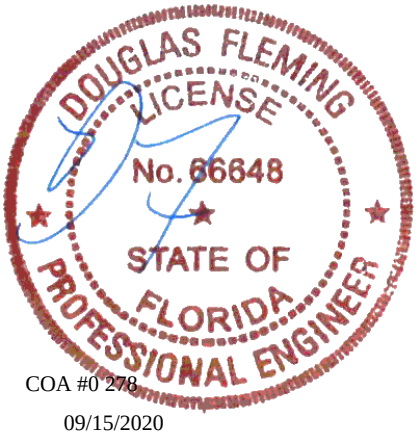

COA #0 278

09/15/2020

****WARNING**** READ AND FOLLOW ALL NOTES ON THIS DRAWING!
****IMPORTANT**** FURNISH THIS DRAWING TO ALL CONTRACTORS INCLUDING THE INSTALLERS

Trusses require extreme care in fabricating, handling, shipping, installing and bracing. Refer to and follow the latest edition of BCSI (Building Component Safety Information, by TPI and SBCA) for safety practices prior to performing these functions. Installers shall provide temporary bracing per BCSI. Unless noted otherwise, top chord shall have properly attached structural sheathing and bottom chord shall have a properly attached rigid ceiling. Locations shown for permanent lateral restraint of webs shall have bracing installed per BCSI sections B3, B7, or B10, as applicable. Apply plates to each face of truss and position as shown above and on the Joint Details, unless noted otherwise. Refer to drawings 160A-Z for standard plate positions. Refer to job's General Notes page for additional information.

Alpine, a division of ITW Building Components Group Inc. shall not be responsible for any deviation from this drawing, any failure to build the truss in conformance with ANSI/TPI 1, or for handling, shipping, installation and bracing of trusses. A seal on this drawing or cover page listing this drawing, indicates acceptance of professional engineering responsibility solely for the design shown. The suitability and use of this drawing for any structure is the responsibility of the Building Designer per ANSI/TPI 1 Sec.2.

For more information see these web sites: Alpine: www.alpineitw.com; TPI: www.tpinst.org; SBCA: www.sbcindustry.com; ICC: www.iccsafe.org

ALPINE AN ITW COMPANY
6750 Forum Drive
Suite 305
Orlando FL, 32821

SEQN: 65870 JACK FROM: RNB	Ply: 1 Qty: 11	**Job Number:** b51385aa -terrell floor plan Trademark Const Group **Truss Label:** CJ6	Cust: R 857 JRef:1WYP8570001 T14 DrwNo: 259.20.1000.13773 SSB / DF 09/15/2020

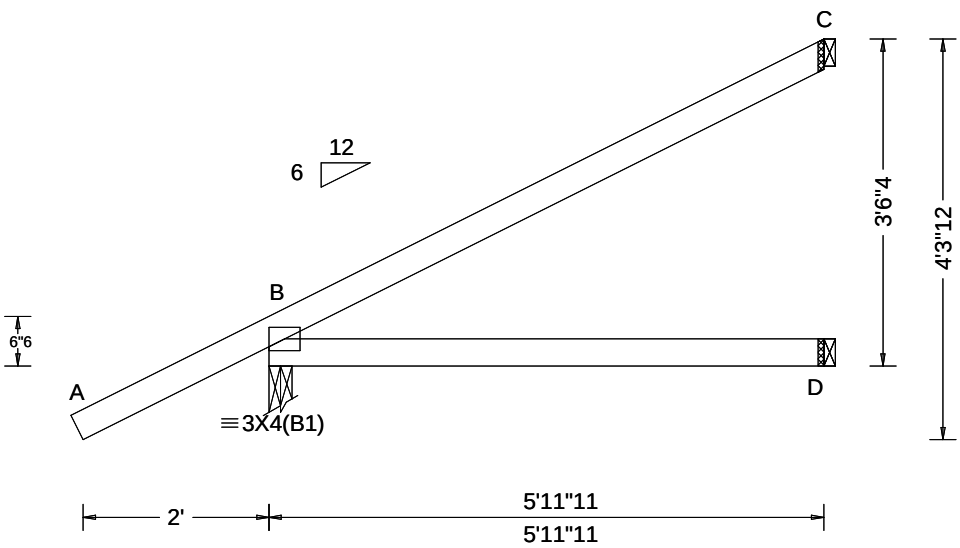

Loading Criteria (psf)
TCLL: 20.00
TCDL: 7.00
BCLL: 0.00
BCDL: 10.00
Des Ld: 37.00
NCBCLL: 10.00
Soffit: 2.00
Load Duration: 1.25
Spacing: 24.0 "

Wind Criteria
Wind Std: ASCE 7-10
Speed: 130 mph
Enclosure: Closed
Risk Category: II
EXP: B Kzt: NA
Mean Height: 15.00 ft
TCDL: 0.0 psf
BCDL: 0.0 psf
MWFRS Parallel Dist: 0 to h/2
C&C Dist a: 3.00 ft
Loc. from endwall: Any
GCpi: 0.18
Wind Duration: 1.60

Snow Criteria (Pg,Pf in PSF)
Pg: NA Ct: NA CAT: NA
Pf: NA Ce: NA
Lu: NA Cs: NA
Snow Duration: NA

Building Code:
FBC 2017 RES
TPI Std: 2014
Rep Fac: Yes
FT/RT:20(0)/0(0)
Plate Type(s):
WAVE

Defl/CSI Criteria
PP Deflection in loc L/defl L/#
VERT(LL): NA
VERT(CL): NA
HORZ(LL): -0.004 C - -
HORZ(TL): 0.007 D - -
Creep Factor: 2.0
Max TC CSI: 0.486
Max BC CSI: 0.276
Max Web CSI: 0.000

VIEW Ver: 18.02.01A.0205.19

▲Maximum Reactions (lbs)

	Gravity			Non-Gravity		
Loc	R+	/ R-	/ Rh	/ Rw	/ U	/ RL
B	377	/-	/-	/221	/102	/91
D	110	/-	/-	/57	/5	/-
C	139	/-	/-	/66	/76	/-

Wind reactions based on MWFRS
B Brg Width = 3.0 Min Req = 1.5
D Brg Width = 1.5 Min Req = -
C Brg Width = 1.5 Min Req = -
Bearing B Fcperp = 425psi.
Members not listed have forces less than 375#

Lumber
Top chord: 2x4 SP #1;
Bot chord: 2x4 SP #1;

Plating Notes
Plates sized for a minimum of 3.50 sq.in./piece.

Purlins
In lieu of structural panels or rigid ceiling use purlins to laterally brace chords as follows:

Chord	Spacing(in oc)	Start(ft)	End(ft)
TC	75	-2.07	5.97
BC	70	0.17	5.97

Apply purlins to any chords above or below fillers at 24" OC unless shown otherwise above.

Wind
Wind loads based on MWFRS with additional C&C member design.

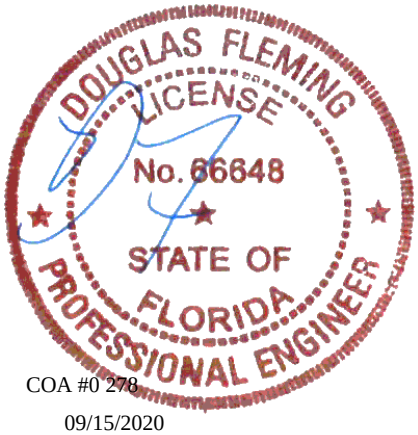

COA #0 278

09/15/2020

****WARNING**** READ AND FOLLOW ALL NOTES ON THIS DRAWING!
****IMPORTANT**** FURNISH THIS DRAWING TO ALL CONTRACTORS INCLUDING THE INSTALLERS

Trusses require extreme care in fabricating, handling, shipping, installing and bracing. Refer to and follow the latest edition of BCSI (Building Component Safety Information, by TPI and SBCA) for safety practices prior to performing these functions. Installers shall provide temporary bracing per BCSI. Unless noted otherwise, top chord shall have properly attached structural sheathing and bottom chord shall have a properly attached rigid ceiling. Locations shown for permanent lateral restraint of webs shall have bracing installed per BCSI sections B3, B7, or B10, as applicable. Apply plates to each face of truss and position as shown above and on the Joint Details, unless noted otherwise. Refer to drawings 160A-Z for standard plate positions. Refer to job's General Notes page for additional information.

Alpine, a division of ITW Building Components Group Inc. shall not be responsible for any deviation from this drawing, any failure to build the truss in conformance with ANSI/TPI 1, or for handling, shipping, installation and bracing of trusses. A seal on this drawing or cover page listing this drawing, indicates acceptance of professional engineering responsibility solely for the design shown. The suitability and use of this drawing for any structure is the responsibility of the Building Designer per ANSI/TPI 1 Sec.2.

For more information see these web sites: Alpine: www.alpineitw.com; TPI: www.tpinst.org; SBCA: www.sbcindustry.com; ICC: www.iccsafe.org

ALPINE AN ITW COMPANY
6750 Forum Drive
Suite 305
Orlando FL, 32821

SEQN: 65871 JACK FROM: RNB	Ply: 1 Qty: 1	**Job Number:** b51385aa -terrell floor plan Trademark Const Group **Truss Label:** CJ6A	Cust: R 857 JRef:1WYP8570001 T38 DrwNo: 259.20.1000.15080 SSB / DF 09/15/2020

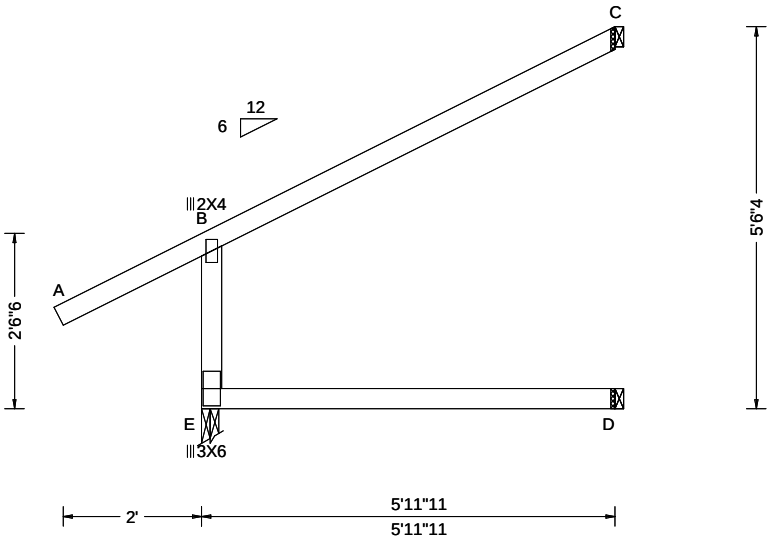

Loading Criteria (psf)

TCLL:	20.00
TCDL:	7.00
BCLL:	0.00
BCDL:	10.00
Des Ld:	37.00
NCBCLL:	10.00
Soffit:	2.00

Load Duration: 1.25
Spacing: 24.0 "

Wind Criteria
Wind Std: ASCE 7-10
Speed: 130 mph
Enclosure: Closed
Risk Category: II
EXP: B Kzt: NA
Mean Height: 15.00 ft
TCDL: 0.0 psf
BCDL: 0.0 psf
MWFRS Parallel Dist: h/2 to h
C&C Dist a: 3.00 ft
Loc. from endwall: not in 9.00 ft
GCpi: 0.18
Wind Duration: 1.60

Snow Criteria (Pg,Pf in PSF)
Pg: NA Ct: NA CAT: NA
Pf: NA Ce: NA
Lu: NA Cs: NA
Snow Duration: NA

Building Code:
FBC 2017 RES
TPI Std: 2014
Rep Fac: Yes
FT/RT:20(0)/0(0)
Plate Type(s):
WAVE

Defl/CSI Criteria

PP Deflection in	loc	L/defl	L/#
VERT(LL): 0.001	B	999	360
VERT(CL): 0.001	B	999	240
HORZ(LL): -0.001	B	-	-
HORZ(TL): 0.001	B	-	-

Creep Factor: 2.0
Max TC CSI: 0.372
Max BC CSI: 0.324
Max Web CSI: 0.171

VIEW Ver: 18.02.01A.0205.19

▲Maximum Reactions (lbs)

	Gravity			Non-Gravity		
Loc	R+	/ R-	/ Rh	/ Rw	/ U	/ RL
E	372	/-	/-	/254	/157	/-
D	119	/-	/-	/60	/-	/21
C	145	/-	/-	/52	/27	/110

Wind reactions based on MWFRS
E Brg Width = 3.0 Min Req = 1.5
D Brg Width = 1.5 Min Req = -
C Brg Width = 1.5 Min Req = -
Bearing E Fcperp = 425psi.
Members not listed have forces less than 375#

Lumber
Top chord: 2x4 SP #1;
Bot chord: 2x4 SP #1;
Webs: 2x4 SP #3;

Plating Notes
Plates sized for a minimum of 3.50 sq.in./piece.

Purlins
In lieu of structural panels or rigid ceiling use purlins to laterally brace chords as follows:

Chord	Spacing(in oc)	Start(ft)	End(ft)
TC	75	-2.07	5.97
BC	72	0.00	5.97

Apply purlins to any chords above or below fillers at 24" OC unless shown otherwise above.

Wind
Wind loads based on MWFRS with additional C&C member design.

Left end vertical exposed to wind pressure. Deflection meets L/180.

DOUGLAS FLEMING
LICENSE
No. 66648
STATE OF
FLORIDA
PROFESSIONAL ENGINEER

COA #0 278

09/15/2020

****WARNING**** READ AND FOLLOW ALL NOTES ON THIS DRAWING!
****IMPORTANT**** FURNISH THIS DRAWING TO ALL CONTRACTORS INCLUDING THE INSTALLERS

Trusses require extreme care in fabricating, handling, shipping, installing and bracing. Refer to and follow the latest edition of BCSI (Building Component Safety Information, by TPI and SBCA) for safety practices prior to performing these functions. Installers shall provide temporary bracing per BCSI. Unless noted otherwise, top chord shall have properly attached structural sheathing and bottom chord shall have a properly attached rigid ceiling. Locations shown for permanent lateral restraint of webs shall have bracing installed per BCSI sections B3, B7, or B10, as applicable. Apply plates to each face of truss and position as shown above and on the Joint Details, unless noted otherwise. Refer to drawings 160A-Z for standard plate positions. Refer to job's General Notes page for additional information.

Alpine, a division of ITW Building Components Group Inc. shall not be responsible for any deviation from this drawing, any failure to build the truss in conformance with ANSI/TPI 1, or for handling, shipping, installation and bracing of trusses. A seal on this drawing or cover page listing this drawing, indicates acceptance of professional engineering responsibility solely for the design shown. The suitability and use of this drawing for any structure is the responsibility of the Building Designer per ANSI/TPI 1 Sec.2.

For more information see these web sites: Alpine: www.alpineitw.com; TPI: www.tpinst.org; SBCA: www.sbcindustry.com; ICC: www.iccsafe.org

ALPINE
AN ITW COMPANY
6750 Forum Drive
Suite 305
Orlando FL, 32821

SEQN: 65872 JACK FROM: RNB	Ply: 1 Qty: 1	**Job Number:** b51385aa -terrell floor plan Trademark Const Group **Truss Label:** CJ8	Cust: R 857 JRef:1WYP8570001 T34 DrwNo: 259.20.1000.16283 SSB / DF 09/15/2020

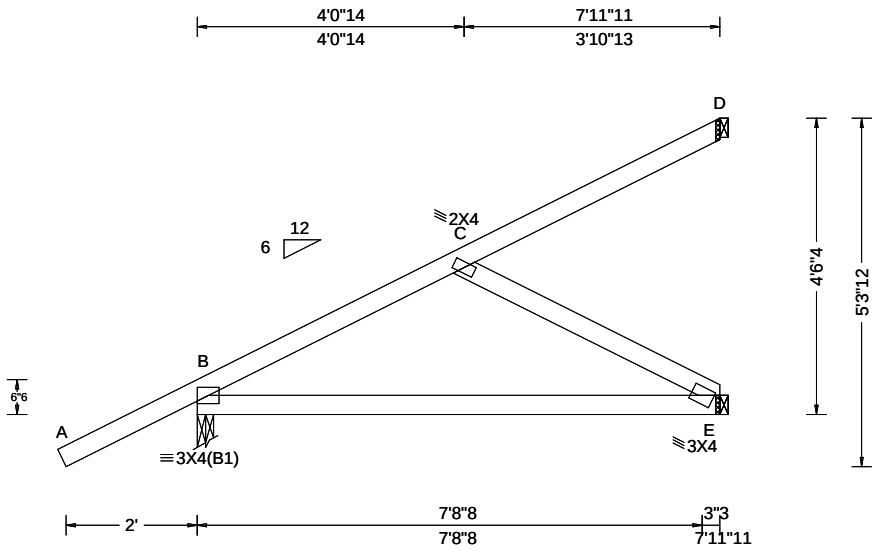

Loading Criteria (psf)

TCLL: 20.00
TCDL: 7.00
BCLL: 0.00
BCDL: 10.00
Des Ld: 37.00
NCBCLL: 10.00
Soffit: 2.00
Load Duration: 1.25
Spacing: 24.0 "

Wind Criteria

Wind Std: ASCE 7-10
Speed: 130 mph
Enclosure: Closed
Risk Category: II
EXP: B Kzt: NA
Mean Height: 15.00 ft
TCDL: 0.0 psf
BCDL: 0.0 psf
MWFRS Parallel Dist: 0 to h/2
C&C Dist a: 3.00 ft
Loc. from endwall: not in 4.50 ft
GCpi: 0.18
Wind Duration: 1.60

Snow Criteria (Pg,Pf in PSF)

Pg: NA Ct: NA CAT: NA
Pf: NA Ce: NA
Lu: NA Cs: NA
Snow Duration: NA

Building Code:
FBC 2017 RES
TPI Std: 2014
Rep Fac: Yes
FT/RT:20(0)/0(0)
Plate Type(s):
WAVE

Defl/CSI Criteria

PP Deflection in	loc	L/defl	L/#
VERT(LL): -0.004	C	999	360
VERT(CL): -0.009	C	999	240
HORZ(LL): -0.003	E	-	-
HORZ(TL): 0.008	E	-	-

Creep Factor: 2.0
Max TC CSI: 0.335
Max BC CSI: 0.439
Max Web CSI: 0.110

VIEW Ver: 18.02.01A.0205.19

▲Maximum Reactions (lbs)

	Gravity			Non-Gravity		
Loc	R+	/ R-	/ Rh	/ Rw	/ U	/ RL
B	443	/-	/-	/257	/116	/115
E	194	/-	/-	/131	/66	/-
D	94	/-	/-	/45	/49	/-

Wind reactions based on MWFRS
B Brg Width = 3.0 Min Req = 1.5
E Brg Width = 1.5 Min Req = -
D Brg Width = 1.5 Min Req = -
Bearing B Fcperp = 425psi.
Members not listed have forces less than 375#

Lumber

Top chord: 2x4 SP #1;
Bot chord: 2x4 SP #1;
Webs: 2x4 SP #3;

Plating Notes

Plates sized for a minimum of 3.50 sq.in./piece.

Purlins

In lieu of structural panels or rigid ceiling use purlins to laterally brace chords as follows:

Chord	Spacing(in oc)	Start(ft)	End(ft)
TC	75	-2.07	7.97
BC	75	0.17	7.81

Apply purlins to any chords above or below fillers at 24" OC unless shown otherwise above.

Wind

Wind loads based on MWFRS with additional C&C member design.

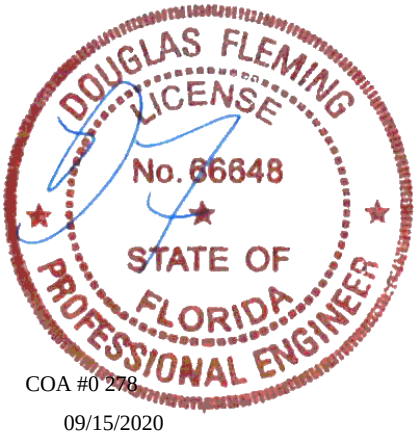

COA #0 278

09/15/2020

****WARNING**** READ AND FOLLOW ALL NOTES ON THIS DRAWING!
****IMPORTANT**** FURNISH THIS DRAWING TO ALL CONTRACTORS INCLUDING THE INSTALLERS

Trusses require extreme care in fabricating, handling, shipping, installing and bracing. Refer to and follow the latest edition of BCSI (Building Component Safety Information, by TPI and SBCA) for safety practices prior to performing these functions. Installers shall provide temporary bracing per BCSI. Unless noted otherwise, top chord shall have properly attached structural sheathing and bottom chord shall have a properly attached rigid ceiling. Locations shown for permanent lateral restraint of webs shall have bracing installed per BCSI sections B3, B7, or B10, as applicable. Apply plates to each face of truss and position as shown above and on the Joint Details, unless noted otherwise. Refer to drawings 160A-Z for standard plate positions. Refer to job's General Notes page for additional information.

Alpine, a division of ITW Building Components Group Inc. shall not be responsible for any deviation from this drawing, any failure to build the truss in conformance with ANSI/TPI 1, or for handling, shipping, installation and bracing of trusses. A seal on this drawing or cover page listing this drawing, indicates acceptance of professional engineering responsibility solely for the design shown. The suitability and use of this drawing for any structure is the responsibility of the Building Designer per ANSI/TPI 1 Sec.2.

For more information see these web sites: Alpine: www.alpineitw.com; TPI: www.tpinst.org; SBCA: www.sbcindustry.com; ICC: www.iccsafe.org

ALPINE AN ITW COMPANY
6750 Forum Drive
Suite 305
Orlando FL, 32821

SEQN: 65873 JACK FROM: RNB	Ply: 1 Qty: 1	**Job Number:** b51385aa -terrell floor plan Trademark Const Group **Truss Label:** CJ8A	Cust: R 857 JRef:1WYP8570001 T26 DrwNo: 259.20.1000.17457 SSB / DF 09/15/2020

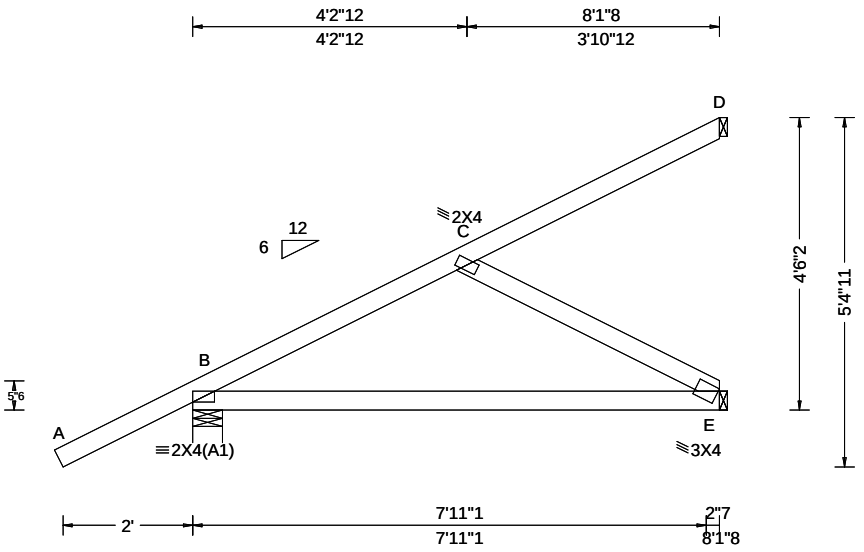

Loading Criteria (psf)

TCLL: 20.00
TCDL: 7.00
BCLL: 0.00
BCDL: 10.00
Des Ld: 37.00
NCBCLL: 10.00
Soffit: 2.00
Load Duration: 1.25
Spacing: 24.0 "

Wind Criteria

Wind Std: ASCE 7-10
Speed: 130 mph
Enclosure: Closed
Risk Category: II
EXP: B Kzt: NA
Mean Height: 15.00 ft
TCDL: 0.0 psf
BCDL: 0.0 psf
MWFRS Parallel Dist: h to 2h
C&C Dist a: 3.00 ft
Loc. from endwall: not in 9.00 ft
GCpi: 0.18
Wind Duration: 1.60

Snow Criteria (Pg,Pf in PSF)

Pg: NA Ct: NA CAT: NA
Pf: NA Ce: NA
Lu: NA Cs: NA
Snow Duration: NA

Building Code:
FBC 2017 RES
TPI Std: 2014
Rep Fac: Yes
FT/RT:20(0)/0(0)
Plate Type(s):
WAVE

Defl/CSI Criteria

PP Deflection in	loc	L/defl	L/#
VERT(LL): 0.004	E	999	360
VERT(CL): 0.012	E	999	240
HORZ(LL): 0.003	E	-	-
HORZ(TL): 0.008	E	-	-

Creep Factor: 2.0
Max TC CSI: 0.386
Max BC CSI: 0.425
Max Web CSI: 0.114

VIEW Ver: 18.02.01A.0205.19

▲Maximum Reactions (lbs)

	Gravity			Non-Gravity		
Loc	R+	/ R-	/ Rh	/ Rw	/ U	/ RL
B	451	/-	/-	/262	/88	/84
E	198	/-	/-	/133	/49	/-
D	92	/-	/-	/44	/36	/-

Wind reactions based on MWFRS
B Brg Width = 5.5 Min Req = 1.5
E Brg Width = 1.5 Min Req = -
D Brg Width = 1.5 Min Req = -
Bearing B Fcperp = 425psi.
Members not listed have forces less than 375#

Lumber

Top chord: 2x4 SP #1;
Bot chord: 2x4 SP #1;
Webs: 2x4 SP #3;

Plating Notes

Plates sized for a minimum of 3.50 sq.in./piece.

Purlins

In lieu of structural panels or rigid ceiling use purlins to laterally brace chords as follows:

Chord	Spacing(in oc)	Start(ft)	End(ft)
TC	75	-2.07	8.13
BC	75	0.15	7.96

Apply purlins to any chords above or below fillers at 24" OC unless shown otherwise above.

Wind

Wind loads based on MWFRS with additional C&C member design.

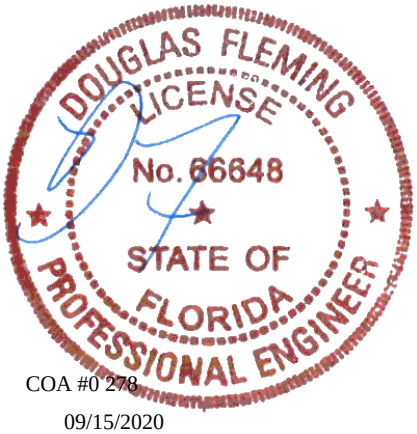

COA #0 278

09/15/2020

****WARNING**** READ AND FOLLOW ALL NOTES ON THIS DRAWING!
****IMPORTANT**** FURNISH THIS DRAWING TO ALL CONTRACTORS INCLUDING THE INSTALLERS

Trusses require extreme care in fabricating, handling, shipping, installing and bracing. Refer to and follow the latest edition of BCSI (Building Component Safety Information, by TPI and SBCA) for safety practices prior to performing these functions. Installers shall provide temporary bracing per BCSI. Unless noted otherwise, top chord shall have properly attached structural sheathing and bottom chord shall have a properly attached rigid ceiling. Locations shown for permanent lateral restraint of webs shall have bracing installed per BCSI sections B3, B7, or B10, as applicable. Apply plates to each face of truss and position as shown above and on the Joint Details, unless noted otherwise. Refer to drawings 160A-Z for standard plate positions. Refer to job's General Notes page for additional information.

Alpine, a division of ITW Building Components Group Inc. shall not be responsible for any deviation from this drawing, any failure to build the truss in conformance with ANSI/TPI 1, or for handling, shipping, installation and bracing of trusses. A seal on this drawing or cover page listing this drawing, indicates acceptance of professional engineering responsibility solely for the design shown. The suitability and use of this drawing for any structure is the responsibility of the Building Designer per ANSI/TPI 1 Sec.2.

For more information see these web sites: Alpine: www.alpineitw.com; TPI: www.tpinst.org; SBCA: www.sbcindustry.com; ICC: www.iccsafe.org

ALPINE AN ITW COMPANY
6750 Forum Drive
Suite 305
Orlando FL, 32821

SEQN: 65936 JACK FROM: RNB	Ply: 1 Qty: 1	**Job Number:** b51385aa -terrell floor plan Trademark Const Group **Truss Label:** CJG4	Cust: R 857 JRef:1WYP8570001 T12 DrwNo: 259.20.1000.18950 SSB / DF 09/15/2020

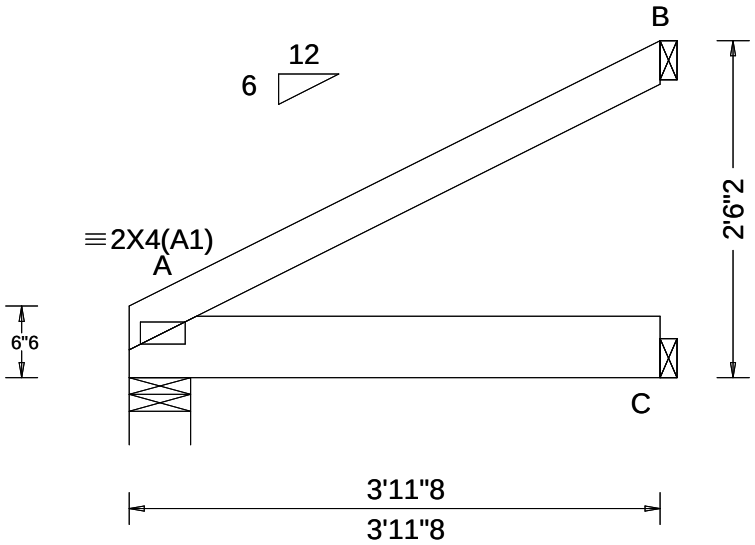

Loading Criteria (psf)
TCLL: 20.00
TCDL: 7.00
BCLL: 0.00
BCDL: 10.00
Des Ld: 37.00
NCBCLL: 10.00
Soffit: 2.00
Load Duration: 1.25
Spacing: 24.0 "

Wind Criteria
Wind Std: ASCE 7-10
Speed: 130 mph
Enclosure: Closed
Risk Category: II
EXP: B Kzt: NA
Mean Height: 15.00 ft
TCDL: 0.0 psf
BCDL: 0.0 psf
MWFRS Parallel Dist: 0 to h/2
C&C Dist a: 3.00 ft
Loc. from endwall: Any
GCpi: 0.18
Wind Duration: 1.60

Snow Criteria (Pg,Pf in PSF)
Pg: NA Ct: NA CAT: NA
Pf: NA Ce: NA
Lu: NA Cs: NA
Snow Duration: NA

Building Code:
FBC 2017 RES
TPI Std: 2014
Rep Fac: Varies by Ld Case
FT/RT:20(0)/0(0)
Plate Type(s):
WAVE

Defl/CSI Criteria
PP Deflection in loc L/defl L/#
VERT(LL): NA
VERT(CL): NA
HORZ(LL): 0.004 C - -
HORZ(TL): 0.007 C - -
Creep Factor: 2.0
Max TC CSI: 0.185
Max BC CSI: 0.354
Max Web CSI: 0.000

VIEW Ver: 18.02.01A.0205.19

▲Maximum Reactions (lbs)

	Gravity			Non-Gravity		
Loc	R+	/ R-	/ Rh	/ Rw	/ U	/ RL
A	569	/-	/-	/-	/183	/-
C	389	/-	/-	/-	/92	/-
B	112	/-	/-	/-	/43	/-

Wind reactions based on MWFRS
A Brg Width = 5.5 Min Req = 1.5
C Brg Width = 1.5 Min Req = -
B Brg Width = 1.5 Min Req = -
Bearing A Fcperp = 425psi.
Members not listed have forces less than 375#

Lumber
Top chord: 2x4 SP #1;
Bot chord: 2x6 SP #1;

Special Loads
------(Lumber Dur.Fac.=1.25 / Plate Dur.Fac.=1.25)

TC: From	56 plf at	0.00 to	56 plf at	2.60
TC: From	28 plf at	2.60 to	28 plf at	3.96
BC: From	10 plf at	0.00 to	10 plf at	3.96

TC: 35 lb Conc. Load at 3.96
BC: 357 lb Conc. Load at 0.60, 2.60
BC: 99 lb Conc. Load at 3.96

Plating Notes
Plates sized for a minimum of 3.50 sq.in./piece.

Purlins
In lieu of structural panels or rigid ceiling use purlins to laterally brace chords as follows:

Chord	Spacing(in oc)	Start(ft)	End(ft)
TC	53	0.00	3.96
BC	46	0.15	3.96

Apply purlins to any chords above or below fillers at 24" OC unless shown otherwise above.

Wind
Wind loads and reactions based on MWFRS.

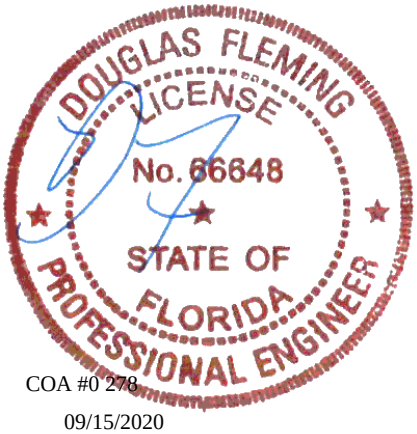

COA #0 278

09/15/2020

****WARNING**** READ AND FOLLOW ALL NOTES ON THIS DRAWING!
****IMPORTANT**** FURNISH THIS DRAWING TO ALL CONTRACTORS INCLUDING THE INSTALLERS

Trusses require extreme care in fabricating, handling, shipping, installing and bracing. Refer to and follow the latest edition of BCSI (Building Component Safety Information, by TPI and SBCA) for safety practices prior to performing these functions. Installers shall provide temporary bracing per BCSI. Unless noted otherwise, top chord shall have properly attached structural sheathing and bottom chord shall have a properly attached rigid ceiling. Locations shown for permanent lateral restraint of webs shall have bracing installed per BCSI sections B3, B7, or B10, as applicable. Apply plates to each face of truss and position as shown above and on the Joint Details, unless noted otherwise. Refer to drawings 160A-Z for standard plate positions. Refer to job's General Notes page for additional information.

Alpine, a division of ITW Building Components Group Inc. shall not be responsible for any deviation from this drawing, any failure to build the truss in conformance with ANSI/TPI 1, or for handling, shipping, installation and bracing of trusses. A seal on this drawing or cover page listing this drawing, indicates acceptance of professional engineering responsibility solely for the design shown. The suitability and use of this drawing for any structure is the responsibility of the Building Designer per ANSI/TPI 1 Sec.2.

For more information see these web sites: Alpine: www.alpineitw.com; TPI: www.tpinst.org; SBCA: www.sbcindustry.com; ICC: www.iccsafe.org

ALPINE AN ITW COMPANY
6750 Forum Drive
Suite 305
Orlando FL, 32821

SEQN: 65930 JACK FROM: RNB	Ply: 1 Qty: 1	**Job Number:** b51385aa -terrell floor plan Trademark Const Group **Truss Label:** CJG4A	Cust: R 857 JRef:1WYP8570001 T27 DrwNo: 259.20.1000.20590 SSB / DF 09/15/2020

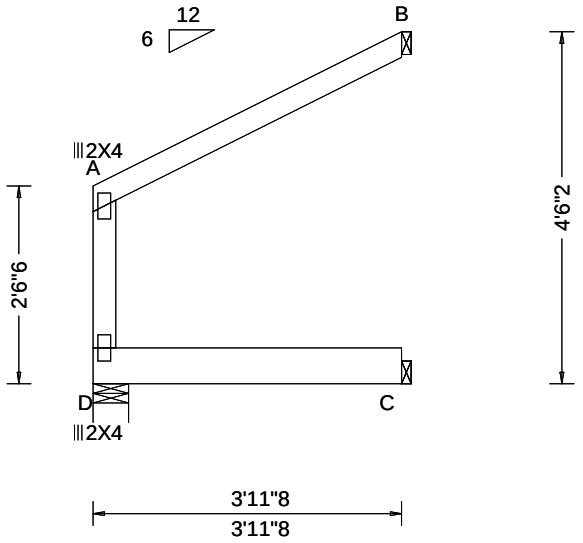

Loading Criteria (psf)

TCLL: 20.00
TCDL: 7.00
BCLL: 0.00
BCDL: 10.00
Des Ld: 37.00
NCBCLL: 10.00
Soffit: 2.00
Load Duration: 1.25
Spacing: 24.0 "

Wind Criteria

Wind Std: ASCE 7-10
Speed: 130 mph
Enclosure: Closed
Risk Category: II
EXP: B Kzt: NA
Mean Height: 15.00 ft
TCDL: 0.0 psf
BCDL: 0.0 psf
MWFRS Parallel Dist: 0 to h/2
C&C Dist a: 3.00 ft
Loc. from endwall: Any
GCpi: 0.18
Wind Duration: 1.60

Snow Criteria (Pg,Pf in PSF)

Pg: NA Ct: NA CAT: NA
Pf: NA Ce: NA
Lu: NA Cs: NA
Snow Duration: NA

Building Code:
FBC 2017 RES
TPI Std: 2014
Rep Fac: Varies by Ld Case
FT/RT:20(0)/0(0)
Plate Type(s):
WAVE

Defl/CSI Criteria

PP Deflection in	loc	L/defl	L/#
VERT(LL): 0.000	A	999	360
VERT(CL): 0.000	A	999	240
HORZ(LL): -0.000	A	-	-
HORZ(TL): 0.000	A	-	-

Creep Factor: 2.0
Max TC CSI: 0.222
Max BC CSI: 0.369
Max Web CSI: 0.041

VIEW Ver: 18.02.01A.0205.19

▲Maximum Reactions (lbs)

	Gravity			Non-Gravity		
Loc	R+	/ R-	/ Rh	/ Rw	/ U	/ RL
D	550	/-	/-	/-	/187	/-
C	308	/-	/-	/-	/93	/13
B	110	/-	/-	/-	/41	/14

Wind reactions based on MWFRS
D Brg Width = 5.5 Min Req = 1.5
C Brg Width = 1.5 Min Req = -
B Brg Width = 1.5 Min Req = -
Bearing D Fcperp = 425psi.
Members not listed have forces less than 375#

Lumber

Top chord: 2x4 SP #1;
Bot chord: 2x6 SP #1;
Webs: 2x4 SP #3;

Special Loads

------(Lumber Dur.Fac.=1.25 / Plate Dur.Fac.=1.25)
TC: From 56 plf at 0.00 to 56 plf at 3.96
BC: From 10 plf at 0.00 to 10 plf at 3.96
BC: 351 lb Conc. Load at 0.60
BC: 356 lb Conc. Load at 2.60

Plating Notes

Plates sized for a minimum of 3.50 sq.in./piece.

Purlins

In lieu of structural panels or rigid ceiling use purlins to laterally brace chords as follows:

Chord	Spacing(in oc)	Start(ft)	End(ft)
TC	53	0.00	3.96
BC	47	0.00	3.96

Apply purlins to any chords above or below fillers at 24" OC unless shown otherwise above.

Wind

Wind loads and reactions based on MWFRS.

Left end vertical exposed to wind pressure. Deflection meets L/180.

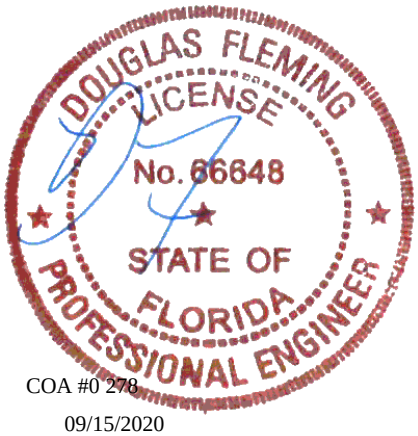

COA #0 278

09/15/2020

****WARNING**** READ AND FOLLOW ALL NOTES ON THIS DRAWING!
****IMPORTANT**** FURNISH THIS DRAWING TO ALL CONTRACTORS INCLUDING THE INSTALLERS

Trusses require extreme care in fabricating, handling, shipping, installing and bracing. Refer to and follow the latest edition of BCSI (Building Component Safety Information, by TPI and SBCA) for safety practices prior to performing these functions. Installers shall provide temporary bracing per BCSI. Unless noted otherwise, top chord shall have properly attached structural sheathing and bottom chord shall have a properly attached rigid ceiling. Locations shown for permanent lateral restraint of webs shall have bracing installed per BCSI sections B3, B7, or B10, as applicable. Apply plates to each face of truss and position as shown above and on the Joint Details, unless noted otherwise. Refer to drawings 160A-Z for standard plate positions. Refer to job's General Notes page for additional information.

Alpine, a division of ITW Building Components Group Inc. shall not be responsible for any deviation from this drawing, any failure to build the truss in conformance with ANSI/TPI 1, or for handling, shipping, installation and bracing of trusses. A seal on this drawing or cover page listing this drawing, indicates acceptance of professional engineering responsibility solely for the design shown. The suitability and use of this drawing for any structure is the responsibility of the Building Designer per ANSI/TPI 1 Sec.2.

For more information see these web sites: Alpine: www.alpineitw.com; TPI: www.tpinst.org; SBCA: www.sbcindustry.com; ICC: www.iccsafe.org

ALPINE AN ITW COMPANY
6750 Forum Drive
Suite 305
Orlando FL, 32821

SEQN: 65874 EJAC FROM: RNB	Ply: 1 Qty: 3	**Job Number:** b51385aa -terrell floor plan Trademark Const Group **Truss Label:** EJ4	Cust: R 857 JRef:1WYP8570001 T80 DrwNo: 259.20.1000.22450 SSB / DF 09/15/2020

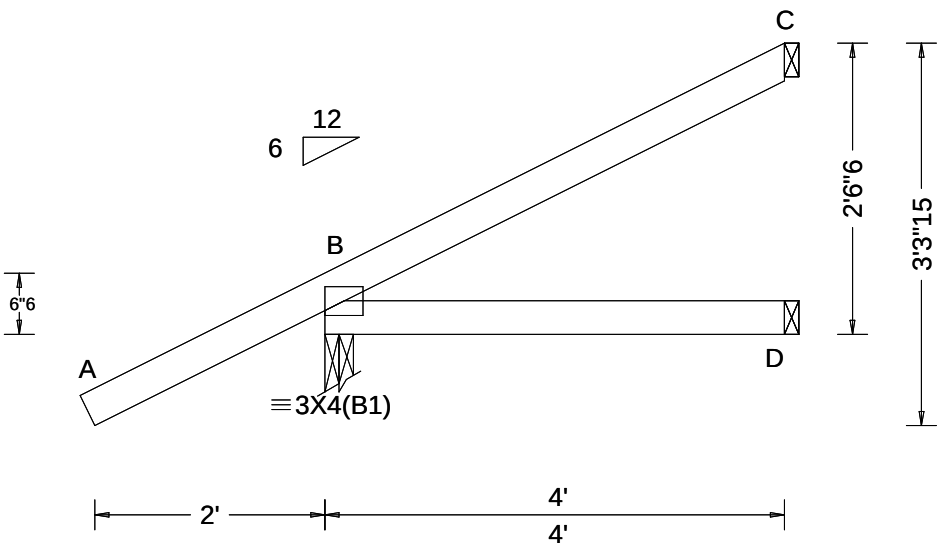

Loading Criteria (psf)
TCLL: 20.00
TCDL: 7.00
BCLL: 0.00
BCDL: 10.00
Des Ld: 37.00
NCBCLL: 10.00
Soffit: 2.00
Load Duration: 1.25
Spacing: 24.0 "

Wind Criteria
Wind Std: ASCE 7-10
Speed: 130 mph
Enclosure: Closed
Risk Category: II
EXP: B Kzt: NA
Mean Height: 15.09 ft
TCDL: 0.0 psf
BCDL: 0.0 psf
MWFRS Parallel Dist: h/2 to h
C&C Dist a: 3.00 ft
Loc. from endwall: not in 9.00 ft
GCpi: 0.18
Wind Duration: 1.60

Snow Criteria (Pg,Pf in PSF)
Pg: NA Ct: NA CAT: NA
Pf: NA Ce: NA
Lu: NA Cs: NA
Snow Duration: NA

Building Code:
FBC 2017 RES
TPI Std: 2014
Rep Fac: Yes
FT/RT:20(0)/0(0)
Plate Type(s):
WAVE

Defl/CSI Criteria
PP Deflection in loc L/defl L/#
VERT(LL): NA
VERT(CL): NA
HORZ(LL): 0.002 D - -
HORZ(TL): 0.002 D - -
Creep Factor: 2.0
Max TC CSI: 0.244
Max BC CSI: 0.118
Max Web CSI: 0.000

VIEW Ver: 18.02.01A.0205.19

▲Maximum Reactions (lbs)

	Gravity			Non-Gravity		
Loc	R+	/ R-	/ Rh	/ Rw	/ U	/ RL
B	314	/-	/-	/188	/89	/68
D	72	/-	/-	/37	/4	/-
C	79	/-	/-	/34	/46	/-

Wind reactions based on MWFRS
B Brg Width = 3.0 Min Req = 1.5
D Brg Width = 1.5 Min Req = -
C Brg Width = 1.5 Min Req = -
Bearing B Fcperp = 425psi.
Members not listed have forces less than 375#

Lumber
Top chord: 2x4 SP #1;
Bot chord: 2x4 SP #1;

Plating Notes
Plates sized for a minimum of 3.50 sq.in./piece.

Purlins
In lieu of structural panels or rigid ceiling use purlins to laterally brace chords as follows:

Chord	Spacing(in oc)	Start(ft)	End(ft)
TC	75	-2.07	4.00
BC	46	0.17	4.00

Apply purlins to any chords above or below fillers at 24" OC unless shown otherwise above.

Wind
Wind loads based on MWFRS with additional C&C member design.

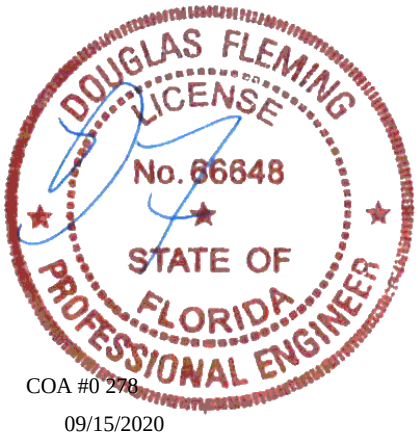

COA #0 278

09/15/2020

****WARNING**** READ AND FOLLOW ALL NOTES ON THIS DRAWING!
****IMPORTANT**** FURNISH THIS DRAWING TO ALL CONTRACTORS INCLUDING THE INSTALLERS

Trusses require extreme care in fabricating, handling, shipping, installing and bracing. Refer to and follow the latest edition of BCSI (Building Component Safety Information, by TPI and SBCA) for safety practices prior to performing these functions. Installers shall provide temporary bracing per BCSI. Unless noted otherwise, top chord shall have properly attached structural sheathing and bottom chord shall have a properly attached rigid ceiling. Locations shown for permanent lateral restraint of webs shall have bracing installed per BCSI sections B3, B7, or B10, as applicable. Apply plates to each face of truss and position as shown above and on the Joint Details, unless noted otherwise. Refer to drawings 160A-Z for standard plate positions. Refer to job's General Notes page for additional information.

Alpine, a division of ITW Building Components Group Inc. shall not be responsible for any deviation from this drawing, any failure to build the truss in conformance with ANSI/TPI 1, or for handling, shipping, installation and bracing of trusses. A seal on this drawing or cover page listing this drawing, indicates acceptance of professional engineering responsibility solely for the design shown. The suitability and use of this drawing for any structure is the responsibility of the Building Designer per ANSI/TPI 1 Sec.2.

For more information see these web sites: Alpine: www.alpineitw.com; TPI: www.tpinst.org; SBCA: www.sbcindustry.com; ICC: www.iccsafe.org

ALPINE AN ITW COMPANY
6750 Forum Drive
Suite 305
Orlando FL, 32821

SEQN: 65875 EJAC FROM: RNB	Ply: 1 Qty: 46	**Job Number:** b51385aa -terrell floor plan Trademark Const Group **Truss Label:** EJ8	Cust: R 857 JRef:1WYP8570001 T17 DrwNo: 259.20.1000.33967 SSB / DF 09/15/2020

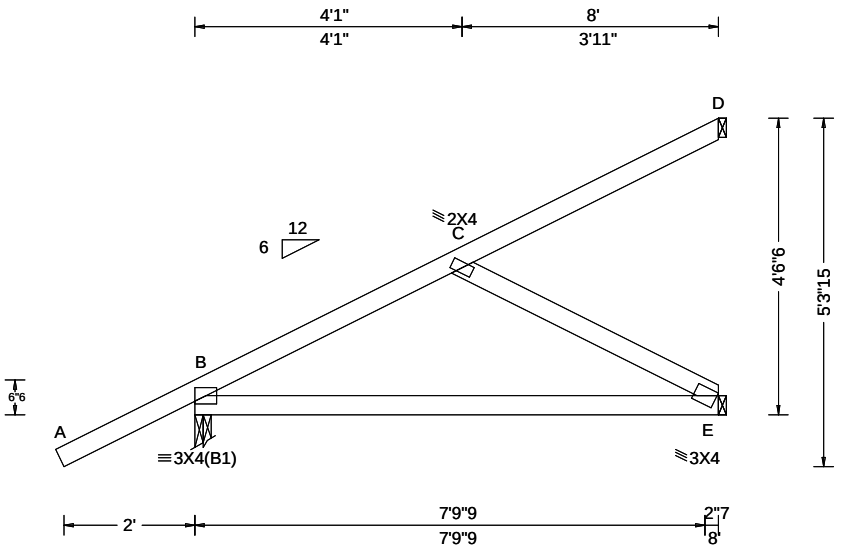

Loading Criteria (psf)
TCLL: 20.00
TCDL: 7.00
BCLL: 0.00
BCDL: 10.00
Des Ld: 37.00
NCBCLL: 10.00
Soffit: 2.00
Load Duration: 1.25
Spacing: 24.0 "

Wind Criteria
Wind Std: ASCE 7-10
Speed: 130 mph
Enclosure: Closed
Risk Category: II
EXP: B Kzt: NA
Mean Height: 15.00 ft
TCDL: 0.0 psf
BCDL: 0.0 psf
MWFRS Parallel Dist: h/2 to h
C&C Dist a: 3.00 ft
Loc. from endwall: not in 4.50 ft
GCpi: 0.18
Wind Duration: 1.60

Snow Criteria (Pg,Pf in PSF)
Pg: NA Ct: NA CAT: NA
Pf: NA Ce: NA
Lu: NA Cs: NA
Snow Duration: NA

Building Code:
FBC 2017 RES
TPI Std: 2014
Rep Fac: Yes
FT/RT:20(0)/0(0)
Plate Type(s):
WAVE

Defl/CSI Criteria

PP Deflection in	loc	L/defl	L/#
VERT(LL): -0.004	C	999	360
VERT(CL): -0.009	C	999	240
HORZ(LL): -0.003	E	-	-
HORZ(TL): 0.008	E	-	-

Creep Factor: 2.0
Max TC CSI: 0.336
Max BC CSI: 0.442
Max Web CSI: 0.111

VIEW Ver: 18.02.01A.0205.19

▲Maximum Reactions (lbs)

	Gravity			Non-Gravity		
Loc	R+	/ R-	/ Rh	/ Rw	/ U	/ RL
B	444	/-	/-	/257	/116	/116
E	194	/-	/-	/131	/66	/-
D	94	/-	/-	/45	/49	/-

Wind reactions based on MWFRS
B Brg Width = 3.0 Min Req = 1.5
E Brg Width = 1.5 Min Req = -
D Brg Width = 1.5 Min Req = -
Bearing B Fcperp = 425psi.
Members not listed have forces less than 375#

Lumber
Top chord: 2x4 SP #1;
Bot chord: 2x4 SP #1;
Webs: 2x4 SP #3;

Plating Notes
Plates sized for a minimum of 3.50 sq.in./piece.

Purlins
In lieu of structural panels or rigid ceiling use purlins to laterally brace chords as follows:

Chord	Spacing(in oc)	Start(ft)	End(ft)
TC	75	-2.07	8.00
BC	75	0.17	7.84

Apply purlins to any chords above or below fillers at 24" OC unless shown otherwise above.

Wind
Wind loads based on MWFRS with additional C&C member design.

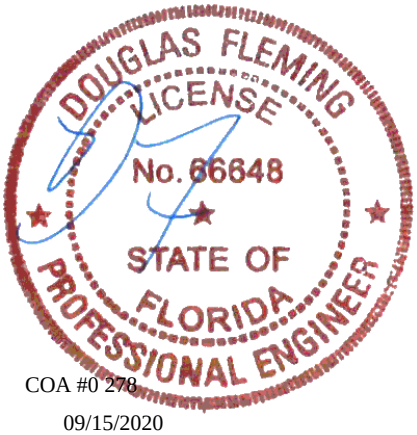

COA #0 278

09/15/2020

****WARNING**** READ AND FOLLOW ALL NOTES ON THIS DRAWING!
****IMPORTANT**** FURNISH THIS DRAWING TO ALL CONTRACTORS INCLUDING THE INSTALLERS

Trusses require extreme care in fabricating, handling, shipping, installing and bracing. Refer to and follow the latest edition of BCSI (Building Component Safety Information, by TPI and SBCA) for safety practices prior to performing these functions. Installers shall provide temporary bracing per BCSI. Unless noted otherwise, top chord shall have properly attached structural sheathing and bottom chord shall have a properly attached rigid ceiling. Locations shown for permanent lateral restraint of webs shall have bracing installed per BCSI sections B3, B7, or B10, as applicable. Apply plates to each face of truss and position as shown above and on the Joint Details, unless noted otherwise. Refer to drawings 160A-Z for standard plate positions. Refer to job's General Notes page for additional information.

Alpine, a division of ITW Building Components Group Inc. shall not be responsible for any deviation from this drawing, any failure to build the truss in conformance with ANSI/TPI 1, or for handling, shipping, installation and bracing of trusses. A seal on this drawing or cover page listing this drawing, indicates acceptance of professional engineering responsibility solely for the design shown. The suitability and use of this drawing for any structure is the responsibility of the Building Designer per ANSI/TPI 1 Sec.2.

For more information see these web sites: Alpine: www.alpineitw.com; TPI: www.tpinst.org; SBCA: www.sbcindustry.com; ICC: www.iccsafe.org

ALPINE AN ITW COMPANY
6750 Forum Drive
Suite 305
Orlando FL, 32821

SEQN: 65876 EJAC FROM: RNB	Ply: 1 Qty: 2	**Job Number:** b51385aa -terrell floor plan Trademark Const Group **Truss Label:** EJ8A	Cust: R 857 JRef:1WYP8570001 T32 DrwNo: 259.20.1000.35430 SSB / DF 09/15/2020

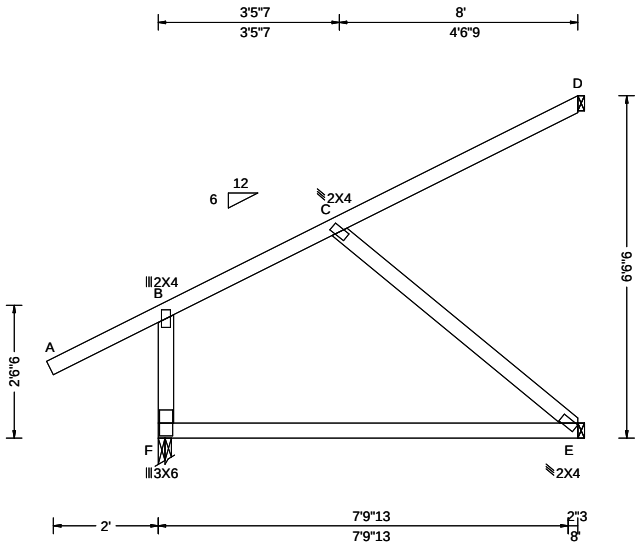

Loading Criteria (psf)

TCLL:	20.00
TCDL:	7.00
BCLL:	0.00
BCDL:	10.00
Des Ld:	37.00
NCBCLL:	10.00
Soffit:	2.00

Load Duration: 1.25
Spacing: 24.0 "

Wind Criteria
Wind Std: ASCE 7-10
Speed: 130 mph
Enclosure: Closed
Risk Category: II
EXP: B Kzt: NA
Mean Height: 15.00 ft
TCDL: 0.0 psf
BCDL: 0.0 psf
MWFRS Parallel Dist: h/2 to h
C&C Dist a: 3.00 ft
Loc. from endwall: not in 9.00 ft
GCpi: 0.18
Wind Duration: 1.60

Snow Criteria (Pg,Pf in PSF)
Pg: NA Ct: NA CAT: NA
Pf: NA Ce: NA
Lu: NA Cs: NA
Snow Duration: NA

Building Code:
FBC 2017 RES
TPI Std: 2014
Rep Fac: Yes
FT/RT:20(0)/0(0)
Plate Type(s):
WAVE

Defl/CSI Criteria

PP Deflection in	loc	L/defl	L/#
VERT(LL): 0.003	C	999	360
VERT(CL): 0.005	C	999	240
HORZ(LL): -0.001	C	-	-
HORZ(TL): 0.002	E	-	-

Creep Factor: 2.0
Max TC CSI: 0.257
Max BC CSI: 0.564
Max Web CSI: 0.163

VIEW Ver: 18.02.01A.0205.19

▲Maximum Reactions (lbs)

	Gravity			Non-Gravity		
Loc	R+	/ R-	/ Rh	/ Rw	/ U	/ RL
F	322	/-	/176	/236	/106	/119
E	223	/-	/-	/141	/82	/-
D	205	/-	/176	/71	/44	/68

Wind reactions based on MWFRS
F Brg Width = 3.0 Min Req = 1.5
E Brg Width = 1.5 Min Req = -
D Brg Width = 1.5 Min Req = -
Bearing F Fcperp = 425psi.
Members not listed have forces less than 375#

Lumber

Top chord: 2x4 SP #1;
Bot chord: 2x4 SP #1;
Webs: 2x4 SP #3;

Plating Notes

Plates sized for a minimum of 3.50 sq.in./piece.

Purlins

In lieu of structural panels or rigid ceiling use purlins to laterally brace chords as follows:

Chord	Spacing(in oc)	Start(ft)	End(ft)
TC	75	-2.07	8.00
BC	94	0.00	7.83

Apply purlins to any chords above or below fillers at 24" OC unless shown otherwise above.

Wind

Wind loads based on MWFRS with additional C&C member design.

Left end vertical exposed to wind pressure. Deflection meets L/180.

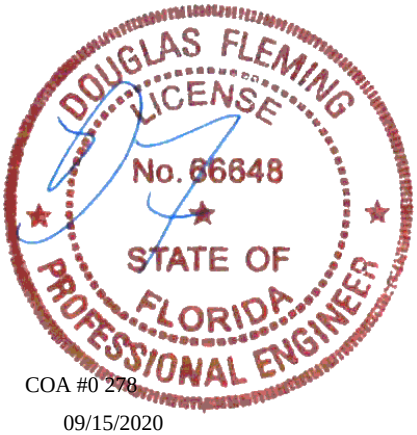

COA #0 278

09/15/2020

****WARNING**** READ AND FOLLOW ALL NOTES ON THIS DRAWING!
****IMPORTANT**** FURNISH THIS DRAWING TO ALL CONTRACTORS INCLUDING THE INSTALLERS

Trusses require extreme care in fabricating, handling, shipping, installing and bracing. Refer to and follow the latest edition of BCSI (Building Component Safety Information, by TPI and SBCA) for safety practices prior to performing these functions. Installers shall provide temporary bracing per BCSI. Unless noted otherwise, top chord shall have properly attached structural sheathing and bottom chord shall have a properly attached rigid ceiling. Locations shown for permanent lateral restraint of webs shall have bracing installed per BCSI sections B3, B7, or B10, as applicable. Apply plates to each face of truss and position as shown above and on the Joint Details, unless noted otherwise. Refer to drawings 160A-Z for standard plate positions. Refer to job's General Notes page for additional information.

Alpine, a division of ITW Building Components Group Inc. shall not be responsible for any deviation from this drawing, any failure to build the truss in conformance with ANSI/TPI 1, or for handling, shipping, installation and bracing of trusses. A seal on this drawing or cover page listing this drawing, indicates acceptance of professional engineering responsibility solely for the design shown. The suitability and use of this drawing for any structure is the responsibility of the Building Designer per ANSI/TPI 1 Sec.2.

For more information see these web sites: Alpine: www.alpineitw.com; TPI: www.tpinst.org; SBCA: www.sbcindustry.com; ICC: www.iccsafe.org

ALPINE AN ITW COMPANY
6750 Forum Drive
Suite 305
Orlando FL, 32821

SEQN: 65877 GABL FROM: RNB	Ply: 1 Qty: 1	**Job Number:** b51385aa -terrell floor plan Trademark Const Group **Truss Label:** GE1	Cust: R 857 JRef:1WYP8570001 T63 DrwNo: 259.20.1000.37217 SSB / DF 09/15/2020

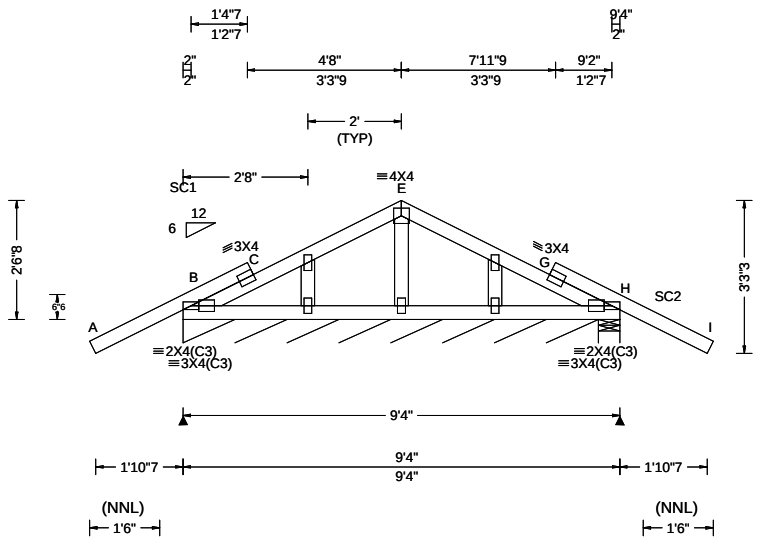

Loading Criteria (psf)

TCLL:	20.00
TCDL:	7.00
BCLL:	0.00
BCDL:	10.00
Des Ld:	37.00
NCBCLL:	10.00
Soffit:	2.00

Load Duration: 1.25
Spacing: 24.0 "

Wind Criteria
Wind Std: ASCE 7-10
Speed: 130 mph
Enclosure: Closed
Risk Category: II
EXP: B Kzt: NA
Mean Height: 15.00 ft
TCDL: 0.0 psf
BCDL: 0.0 psf
MWFRS Parallel Dist: 0 to h/2
C&C Dist a: 3.00 ft
Loc. from endwall: Any
GCpi: 0.18
Wind Duration: 1.60

Snow Criteria (Pg,Pf in PSF)
Pg: NA Ct: NA CAT: NA
Pf: NA Ce: NA
Lu: NA Cs: NA
Snow Duration: NA

Building Code:
FBC 2017 RES
TPI Std: 2014
Rep Fac: Yes
FT/RT:20(0)/0(0)
Plate Type(s):
WAVE

Defl/CSI Criteria

PP Deflection in	loc	L/defl	L/#
VERT(LL): -0.002	C	999	360
VERT(CL): 0.003	L	999	240
HORZ(LL): 0.001	C	-	-
HORZ(TL): 0.002	C	-	-

Creep Factor: 2.0
Max TC CSI: 0.312
Max BC CSI: 0.123
Max Web CSI: 0.025

VIEW Ver: 18.02.01A.0205.19

▲Maximum Reactions (lbs), or *=PLF

	Gravity			Non-Gravity		
Loc	R+	/ R-	/ Rh	/ Rw	/ U	/ RL
B*	76	/-	/-	/42	/23	/8
H	268	/-	/-	/169	/87	/-

Wind reactions based on MWFRS
B Brg Width = 106 Min Req = -
H Brg Width = 5.5 Min Req = 1.5
Bearings B & H Fcperp = 425psi.
Members not listed have forces less than 375#

Maximum Top Chord Forces Per Ply (lbs)

Chords	Tens.	Comp.	Chords	Tens.	Comp.
B - C	603	- 598	G - H	517	- 501

Lumber
Top chord: 2x4 SP #1;
Bot chord: 2x4 SP #1;
Webs: 2x4 SP #3;
Stack Chord: SC1 2x4 SP #1;
Stack Chord: SC2 2x4 SP #1;

Plating Notes
All plates are 2X4 except as noted.
Plates sized for a minimum of 3.50 sq.in./piece.

Purlins
In lieu of structural panels or rigid ceiling use purlins to laterally brace chords as follows:

Chord	Spacing(in oc)	Start(ft)	End(ft)
TC	44	-1.93	1.50
TC	61	0.00	4.67
TC	61	4.67	9.33
TC	44	7.83	11.27
BC	75	0.00	9.33

Apply purlins to any chords above or below fillers at 24" OC unless shown otherwise above.

Wind
Wind loads based on MWFRS with additional C&C member design.

Additional Notes
See DWGS A14015ENC101014 & GBLLETIN0118 for gable wind bracing and other requirements.

Stacked top chord must NOT be notched or cut in area (NNL). Dropped top chord braced at 24" oc intervals. Attach stacked top chord (SC) to dropped top chord in notchable area using 3x4 tie-plates 24" oc. Center plate on stacked/dropped chord interface, plate length perpendicular to chord length. Splice top chord in notchable area using 3x6.

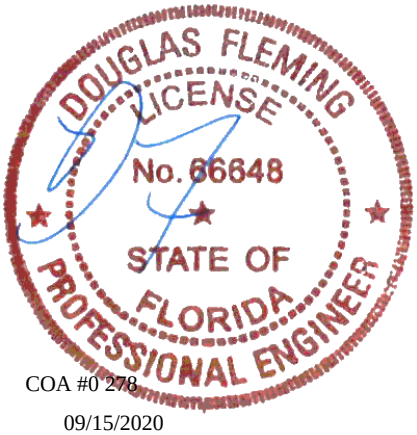

COA #0 278

09/15/2020

****WARNING**** READ AND FOLLOW ALL NOTES ON THIS DRAWING!
****IMPORTANT**** FURNISH THIS DRAWING TO ALL CONTRACTORS INCLUDING THE INSTALLERS

Trusses require extreme care in fabricating, handling, shipping, installing and bracing. Refer to and follow the latest edition of BCSI (Building Component Safety Information, by TPI and SBCA) for safety practices prior to performing these functions. Installers shall provide temporary bracing per BCSI. Unless noted otherwise, top chord shall have properly attached structural sheathing and bottom chord shall have a properly attached rigid ceiling. Locations shown for permanent lateral restraint of webs shall have bracing installed per BCSI sections B3, B7, or B10, as applicable. Apply plates to each face of truss and position as shown above and on the Joint Details, unless noted otherwise. Refer to drawings 160A-Z for standard plate positions. Refer to job's General Notes page for additional information.

Alpine, a division of ITW Building Components Group Inc. shall not be responsible for any deviation from this drawing, any failure to build the truss in conformance with ANSI/TPI 1, or for handling, shipping, installation and bracing of trusses. A seal on this drawing or cover page listing this drawing, indicates acceptance of professional engineering responsibility solely for the design shown. The suitability and use of this drawing for any structure is the responsibility of the Building Designer per ANSI/TPI 1 Sec.2.

For more information see these web sites: Alpine: www.alpineitw.com; TPI: www.tpinst.org; SBCA: www.sbcindustry.com; ICC: www.iccsafe.org

ALPINE AN ITW COMPANY
6750 Forum Drive
Suite 305
Orlando FL, 32821

SEQN: 65878 HIPS FROM: RNB	Ply: 1 Qty: 1	**Job Number:** b51385aa -terrell floor plan Trademark Const Group **Truss Label:** H0A	Cust: R 857 JRef:1WYP8570001 T1 DrwNo: 259.20.1000.38943 SSB / DF 09/15/2020

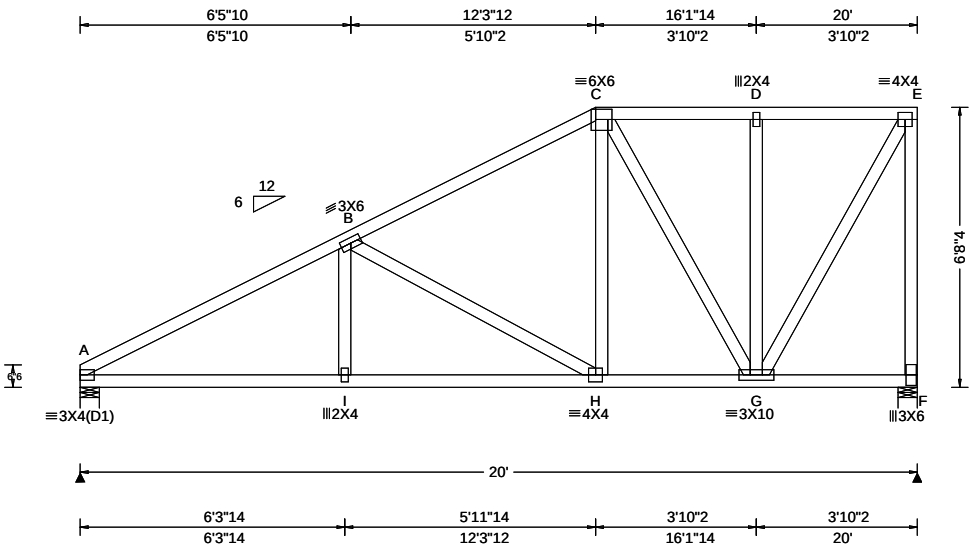

Loading Criteria (psf)

TCLL: 20.00
TCDL: 7.00
BCLL: 0.00
BCDL: 10.00
Des Ld: 37.00
NCBCLL: 10.00
Soffit: 2.00
Load Duration: 1.25
Spacing: 24.0 "

Wind Criteria

Wind Std: ASCE 7-10
Speed: 130 mph
Enclosure: Closed
Risk Category: II
EXP: B Kzt: NA
Mean Height: 15.00 ft
TCDL: 0.0 psf
BCDL: 0.0 psf
MWFRS Parallel Dist: > 2h
C&C Dist a: 3.00 ft
Loc. from endwall: not in 9.00 ft
GCpi: 0.18
Wind Duration: 1.60

Snow Criteria (Pg,Pf in PSF)

Pg: NA Ct: NA CAT: NA
Pf: NA Ce: NA
Lu: NA Cs: NA
Snow Duration: NA

Building Code:
FBC 2017 RES
TPI Std: 2014
Rep Fac: Yes
FT/RT:20(0)/0(0)
Plate Type(s):
WAVE

Defl/CSI Criteria

PP Deflection in	loc	L/defl	L/#
VERT(LL): 0.035	I	999	360
VERT(CL): 0.067	I	999	240
HORZ(LL): 0.012	G	-	-
HORZ(TL): 0.023	G	-	-

Creep Factor: 2.0
Max TC CSI: 0.987
Max BC CSI: 0.722
Max Web CSI: 0.840

VIEW Ver: 18.02.01A.0205.19

▲Maximum Reactions (lbs)

Loc	Gravity R+	Gravity / R-	Gravity / Rh	Non-Gravity / Rw	Non-Gravity / U	Non-Gravity / RL
A	760	/-	/-	/417	/155	/186
F	753	/-	/-	/397	/244	/-

Wind reactions based on MWFRS
A Brg Width = 5.5 Min Req = 1.5
F Brg Width = 5.5 Min Req = 1.5
Bearings A & F Fcperp = 425psi.
Members not listed have forces less than 375#

Maximum Top Chord Forces Per Ply (lbs)

Chords	Tens.	Comp.	Chords	Tens.	Comp.
A - B	519	- 1211	C - D	285	- 380
B - C	367	- 728	D - E	285	- 379

Maximum Bot Chord Forces Per Ply (lbs)

Chords	Tens.	Comp.	Chords	Tens.	Comp.
A - I	1014	- 648	H - G	580	- 415
I - H	1011	- 649			

Maximum Web Forces Per Ply (lbs)

Webs	Tens.	Comp.	Webs	Tens.	Comp.
B - H	280	- 498	G - E	736	- 409
C - H	382	- 142	E - F	415	- 720
C - G	253	- 389			

Lumber

Top chord: 2x4 SP #1;
Bot chord: 2x4 SP #1;
Webs: 2x4 SP #3;

Plating Notes

Plates sized for a minimum of 3.50 sq.in./piece.

Purlins

In lieu of structural panels or rigid ceiling use purlins to laterally brace chords as follows:

Chord	Spacing(in oc)	Start(ft)	End(ft)
TC	65	0.10	12.31
TC	24	12.31	20.00
BC	120	0.17	20.00

Apply purlins to any chords above or below fillers at 24" OC unless shown otherwise above.

Wind

Wind loads based on MWFRS with additional C&C member design.

Right end vertical exposed to wind pressure.
Deflection meets L/180.

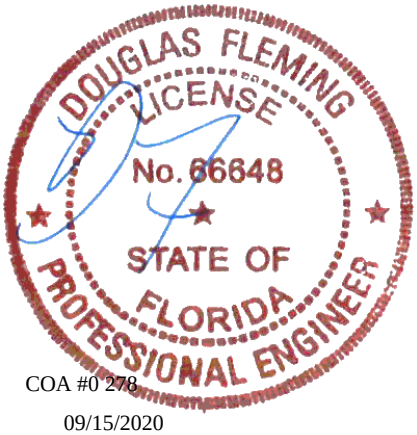

COA #0 278

09/15/2020

****WARNING**** READ AND FOLLOW ALL NOTES ON THIS DRAWING!
****IMPORTANT**** FURNISH THIS DRAWING TO ALL CONTRACTORS INCLUDING THE INSTALLERS

Trusses require extreme care in fabricating, handling, shipping, installing and bracing. Refer to and follow the latest edition of BCSI (Building Component Safety Information, by TPI and SBCA) for safety practices prior to performing these functions. Installers shall provide temporary bracing per BCSI. Unless noted otherwise, top chord shall have properly attached structural sheathing and bottom chord shall have a properly attached rigid ceiling. Locations shown for permanent lateral restraint of webs shall have bracing installed per BCSI sections B3, B7, or B10, as applicable. Apply plates to each face of truss and position as shown above and on the Joint Details, unless noted otherwise. Refer to drawings 160A-Z for standard plate positions. Refer to job's General Notes page for additional information.

Alpine, a division of ITW Building Components Group Inc. shall not be responsible for any deviation from this drawing, any failure to build the truss in conformance with ANSI/TPI 1, or for handling, shipping, installation and bracing of trusses. A seal on this drawing or cover page listing this drawing, indicates acceptance of professional engineering responsibility solely for the design shown. The suitability and use of this drawing for any structure is the responsibility of the Building Designer per ANSI/TPI 1 Sec.2.

For more information see these web sites: Alpine: www.alpineitw.com; TPI: www.tpinst.org; SBCA: www.sbcindustry.com; ICC: www.iccsafe.org

ALPINE AN ITW COMPANY
6750 Forum Drive
Suite 305
Orlando FL, 32821

SEQN: 65879 HIPS FROM: RNB	Ply: 1 Qty: 1	**Job Number:** b51385aa -terrell floor plan Trademark Const Group **Truss Label:** H10A	Cust: R 857 JRef:1WYP8570001 T2 DrwNo: 259.20.1000.40420 SSB / DF 09/15/2020

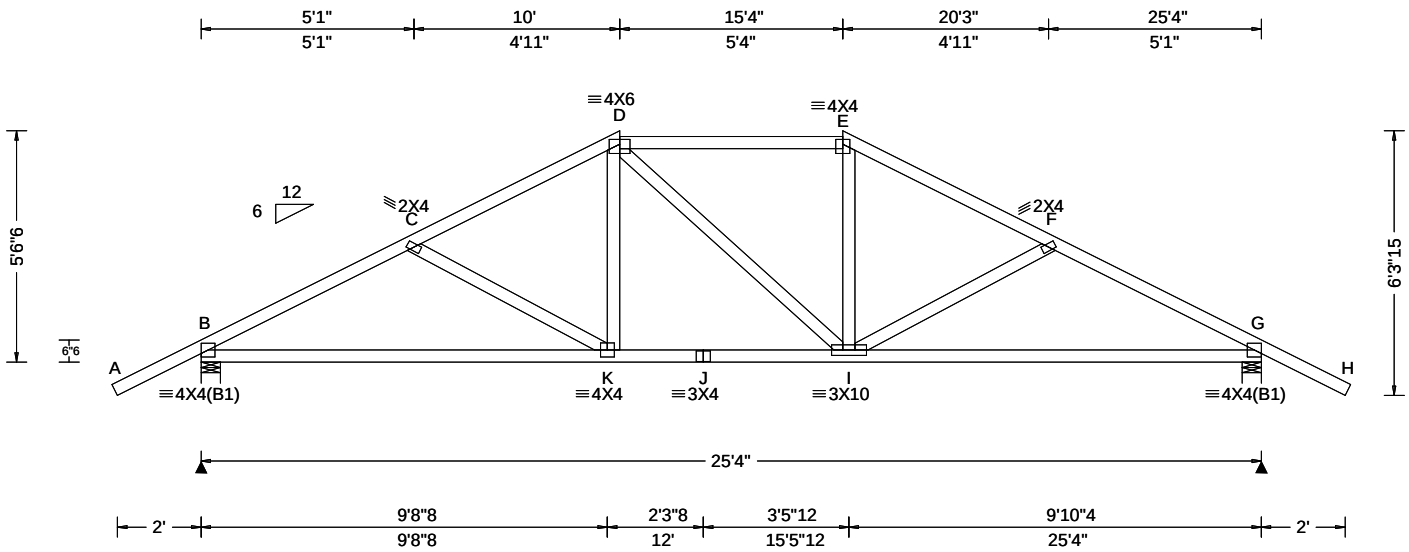

Loading Criteria (psf)

TCLL:	20.00
TCDL:	7.00
BCLL:	0.00
BCDL:	10.00
Des Ld:	37.00
NCBCLL:	10.00
Soffit:	2.00

Load Duration: 1.25
Spacing: 24.0 "

Wind Criteria
Wind Std: ASCE 7-10
Speed: 130 mph
Enclosure: Closed
Risk Category: II
EXP: B Kzt: NA
Mean Height: 15.00 ft
TCDL: 0.0 psf
BCDL: 0.0 psf
MWFRS Parallel Dist: h/2 to h
C&C Dist a: 3.00 ft
Loc. from endwall: not in 9.00 ft
GCpi: 0.18
Wind Duration: 1.60

Snow Criteria (Pg,Pf in PSF)
Pg: NA Ct: NA CAT: NA
Pf: NA Ce: NA
Lu: NA Cs: NA
Snow Duration: NA

Building Code:
FBC 2017 RES
TPI Std: 2014
Rep Fac: Yes
FT/RT:20(0)/0(0)
Plate Type(s):
WAVE

Defl/CSI Criteria

PP Deflection in	loc	L/defl	L/#
VERT(LL): 0.070	K	999	360
VERT(CL): 0.129	K	999	240
HORZ(LL): 0.033	I	-	-
HORZ(TL): 0.060	I	-	-

Creep Factor: 2.0
Max TC CSI: 0.995
Max BC CSI: 0.902
Max Web CSI: 0.132

VIEW Ver: 18.02.01A.0205.19

▲Maximum Reactions (lbs)

	Gravity			Non-Gravity		
Loc	R+	/ R-	/ Rh	/ Rw	/ U	/ RL
B	1082	/-	/-	/577	/343	/123
G	1082	/-	/-	/577	/343	/-

Wind reactions based on MWFRS
B Brg Width = 5.5 Min Req = 1.5
G Brg Width = 5.5 Min Req = 1.5
Bearings B & G Fcperp = 425psi.
Members not listed have forces less than 375#

Maximum Top Chord Forces Per Ply (lbs)

Chords	Tens.	Comp.	Chords	Tens.	Comp.
B - C	697	-1554	E - F	600	-1307
C - D	603	-1312	F - G	696	-1553
D - E	590	-1119			

Maximum Bot Chord Forces Per Ply (lbs)

Chords	Tens.	Comp.	Chords	Tens.	Comp.
B - K	1317	-516	J - I	1116	-370
K - J	1116	-370	I - G	1317	-543

Lumber
Top chord: 2x4 SP #1;
Bot chord: 2x4 SP #1;
Webs: 2x4 SP #3;

Plating Notes
Plates sized for a minimum of 3.50 sq.in./piece.

Purlins
In lieu of structural panels or rigid ceiling use purlins to laterally brace chords as follows:

Chord	Spacing(in oc)	Start(ft)	End(ft)
TC	54	-2.07	10.00
TC	24	10.00	15.33
TC	54	15.33	27.40
BC	120	0.17	25.16

Apply purlins to any chords above or below fillers at 24" OC unless shown otherwise above.

Wind
Wind loads based on MWFRS with additional C&C member design.

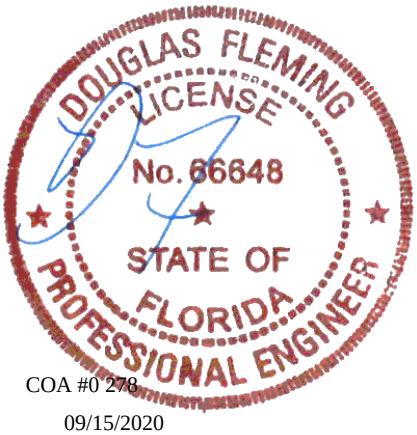

COA #0 278

09/15/2020

****WARNING**** READ AND FOLLOW ALL NOTES ON THIS DRAWING!
****IMPORTANT**** FURNISH THIS DRAWING TO ALL CONTRACTORS INCLUDING THE INSTALLERS

Trusses require extreme care in fabricating, handling, shipping, installing and bracing. Refer to and follow the latest edition of BCSI (Building Component Safety Information, by TPI and SBCA) for safety practices prior to performing these functions. Installers shall provide temporary bracing per BCSI. Unless noted otherwise, top chord shall have properly attached structural sheathing and bottom chord shall have a properly attached rigid ceiling. Locations shown for permanent lateral restraint of webs shall have bracing installed per BCSI sections B3, B7, or B10, as applicable. Apply plates to each face of truss and position as shown above and on the Joint Details, unless noted otherwise. Refer to drawings 160A-Z for standard plate positions. Refer to job's General Notes page for additional information.

Alpine, a division of ITW Building Components Group Inc. shall not be responsible for any deviation from this drawing, any failure to build the truss in conformance with ANSI/TPI 1, or for handling, shipping, installation and bracing of trusses. A seal on this drawing or cover page listing this drawing, indicates acceptance of professional engineering responsibility solely for the design shown. The suitability and use of this drawing for any structure is the responsibility of the Building Designer per ANSI/TPI 1 Sec.2.

For more information see these web sites: Alpine: www.alpineitw.com; TPI: www.tpinst.org; SBCA: www.sbcindustry.com; ICC: www.iccsafe.org

ALPINE AN ITW COMPANY
6750 Forum Drive
Suite 305
Orlando FL, 32821

SEQN: 65880 HIPS FROM: RNB	Ply: 1 Qty: 1	**Job Number:** b51385aa -terrell floor plan Trademark Const Group **Truss Label:** H10B	Cust: R 857 JRef:1WYP8570001 T6 DrwNo: 259.20.1000.41943 SSB / DF 09/15/2020

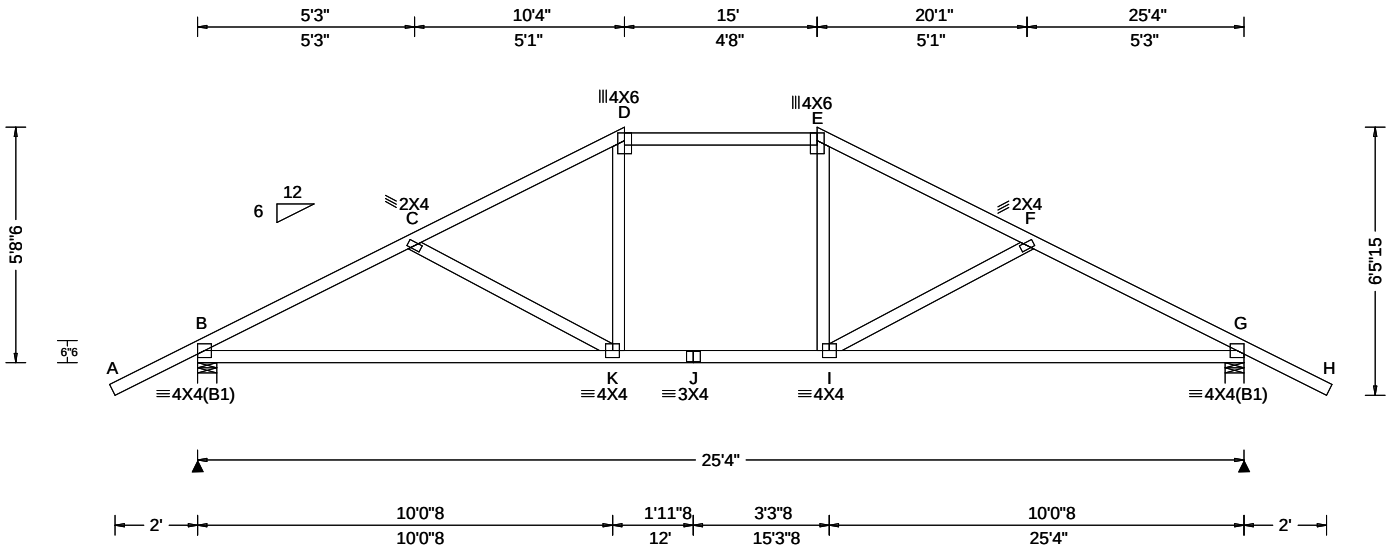

Loading Criteria (psf)

TCLL: 20.00
TCDL: 7.00
BCLL: 0.00
BCDL: 10.00
Des Ld: 37.00
NCBCLL: 10.00
Soffit: 2.00
Load Duration: 1.25
Spacing: 24.0 "

Wind Criteria

Wind Std: ASCE 7-10
Speed: 130 mph
Enclosure: Closed
Risk Category: II
EXP: B Kzt: NA
Mean Height: 15.00 ft
TCDL: 0.0 psf
BCDL: 0.0 psf
MWFRS Parallel Dist: h to 2h
C&C Dist a: 3.00 ft
Loc. from endwall: not in 9.00 ft
GCpi: 0.18
Wind Duration: 1.60

Snow Criteria (Pg,Pf in PSF)

Pg: NA Ct: NA CAT: NA
Pf: NA Ce: NA
Lu: NA Cs: NA
Snow Duration: NA

Building Code:
FBC 2017 RES
TPI Std: 2014
Rep Fac: Yes
FT/RT:20(0)/0(0)
Plate Type(s):
WAVE

Defl/CSI Criteria

PP Deflection in	loc	L/defl	L/#
VERT(LL): 0.113	E	999	360
VERT(CL): 0.258	E	999	240
HORZ(LL): -0.046	D	-	-
HORZ(TL): 0.103	D	-	-

Creep Factor: 2.0
Max TC CSI: 0.983
Max BC CSI: 0.588
Max Web CSI: 0.192

VIEW Ver: 18.02.01A.0205.19

▲Maximum Reactions (lbs)

	Gravity			Non-Gravity		
Loc	R+	/ R-	/ Rh	/ Rw	/ U	/ RL
B	1082	/-	/-	/577	/243	/126
G	1082	/-	/-	/577	/243	/-

Wind reactions based on MWFRS
B Brg Width = 5.5 Min Req = 1.5
G Brg Width = 5.5 Min Req = 1.5
Bearings B & G Fcperp = 425psi.
Members not listed have forces less than 375#

Maximum Top Chord Forces Per Ply (lbs)

Chords	Tens.	Comp.	Chords	Tens.	Comp.
B - C	693	- 1551	E - F	590	- 1290
C - D	590	- 1290	F - G	692	- 1551
D - E	571	- 1092			

Maximum Bot Chord Forces Per Ply (lbs)

Chords	Tens.	Comp.	Chords	Tens.	Comp.
B - K	1315	- 513	J - I	1092	- 365
K - J	1092	- 365	I - G	1315	- 540

Lumber

Top chord: 2x4 SP #1;
Bot chord: 2x4 SP #1;
Webs: 2x4 SP #3;

Plating Notes

Plates sized for a minimum of 3.50 sq.in./piece.

Purlins

In lieu of structural panels or rigid ceiling use purlins to laterally brace chords as follows:

Chord	Spacing(in oc)	Start(ft)	End(ft)
TC	54	-2.07	10.33
TC	24	10.33	15.00
TC	54	15.00	27.40
BC	120	0.17	25.16

Apply purlins to any chords above or below fillers at 24" OC unless shown otherwise above.

Wind

Wind loads based on MWFRS with additional C&C member design.

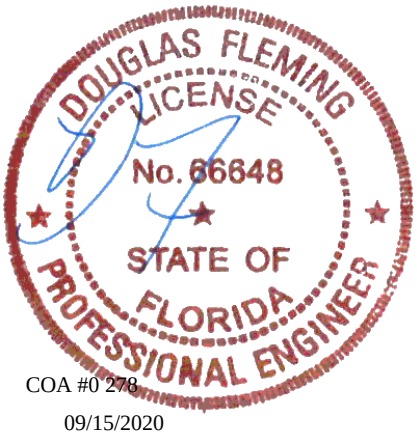

COA #0 278

09/15/2020

****WARNING**** READ AND FOLLOW ALL NOTES ON THIS DRAWING!
****IMPORTANT**** FURNISH THIS DRAWING TO ALL CONTRACTORS INCLUDING THE INSTALLERS

Trusses require extreme care in fabricating, handling, shipping, installing and bracing. Refer to and follow the latest edition of BCSI (Building Component Safety Information, by TPI and SBCA) for safety practices prior to performing these functions. Installers shall provide temporary bracing per BCSI. Unless noted otherwise, top chord shall have properly attached structural sheathing and bottom chord shall have a properly attached rigid ceiling. Locations shown for permanent lateral restraint of webs shall have bracing installed per BCSI sections B3, B7, or B10, as applicable. Apply plates to each face of truss and position as shown above and on the Joint Details, unless noted otherwise. Refer to drawings 160A-Z for standard plate positions. Refer to job's General Notes page for additional information.

Alpine, a division of ITW Building Components Group Inc. shall not be responsible for any deviation from this drawing, any failure to build the truss in conformance with ANSI/TPI 1, or for handling, shipping, installation and bracing of trusses. A seal on this drawing or cover page listing this drawing, indicates acceptance of professional engineering responsibility solely for the design shown. The suitability and use of this drawing for any structure is the responsibility of the Building Designer per ANSI/TPI 1 Sec.2.

For more information see these web sites: Alpine: www.alpineitw.com; TPI: www.tpinst.org; SBCA: www.sbcindustry.com; ICC: www.iccsafe.org

ALPINE AN ITW COMPANY
6750 Forum Drive
Suite 305
Orlando FL, 32821

SEQN: 65881 HIPS FROM: RNB	Ply: 1 Qty: 1	**Job Number:** b51385aa -terrell floor plan Trademark Const Group **Truss Label:** H12A	Cust: R 857 JRef:1WYP8570001 T3 DrwNo: 259.20.1000.43337 SSB / DF 09/15/2020

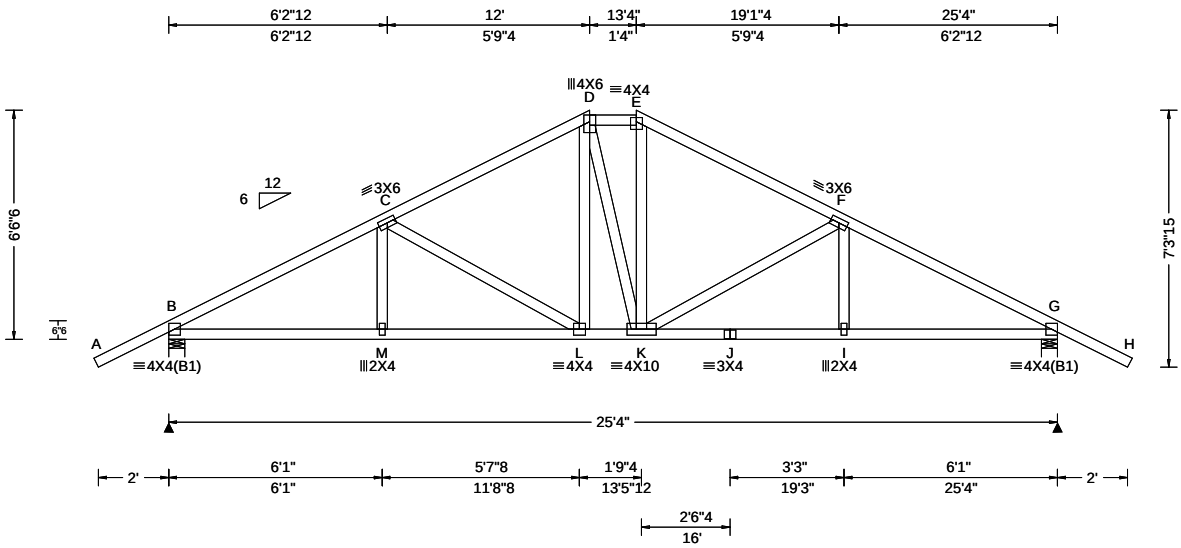

Loading Criteria (psf)

TCLL:	20.00
TCDL:	7.00
BCLL:	0.00
BCDL:	10.00
Des Ld:	37.00
NCBCLL:	10.00
Soffit:	2.00

Load Duration: 1.25
Spacing: 24.0 "

Wind Criteria
Wind Std: ASCE 7-10
Speed: 130 mph
Enclosure: Closed
Risk Category: II
EXP: B Kzt: NA
Mean Height: 15.00 ft
TCDL: 0.0 psf
BCDL: 0.0 psf
MWFRS Parallel Dist: h/2 to h
C&C Dist a: 3.00 ft
Loc. from endwall: not in 9.00 ft
GCpi: 0.18
Wind Duration: 1.60

Snow Criteria (Pg,Pf in PSF)
Pg: NA Ct: NA CAT: NA
Pf: NA Ce: NA
Lu: NA Cs: NA
Snow Duration: NA

Building Code:
FBC 2017 RES
TPI Std: 2014
Rep Fac: Yes
FT/RT:20(0)/0(0)
Plate Type(s):
WAVE

Defl/CSI Criteria

PP Deflection in	loc	L/defl	L/#
VERT(LL): 0.074	L	999	360
VERT(CL): 0.136	L	999	240
HORZ(LL): 0.036	I	-	-
HORZ(TL): 0.066	I	-	-

Creep Factor: 2.0
Max TC CSI: 0.969
Max BC CSI: 0.821
Max Web CSI: 0.329

VIEW Ver: 18.02.01A.0205.19

▲ Maximum Reactions (lbs)

	Gravity			Non-Gravity		
Loc	R+	/ R-	/ Rh	/ Rw	/ U	/ RL
B	1082	/-	/-	/577	/343	/141
G	1082	/-	/-	/577	/343	/-

Wind reactions based on MWFRS
B Brg Width = 5.5 Min Req = 1.5
G Brg Width = 5.5 Min Req = 1.5
Bearings B & G Fcperp = 425psi.
Members not listed have forces less than 375#

Maximum Top Chord Forces Per Ply (lbs)

Chords	Tens.	Comp.	Chords	Tens.	Comp.
B - C	643	- 1568	E - F	538	- 1164
C - D	539	- 1168	F - G	641	- 1568
D - E	530	- 974			

Maximum Bot Chord Forces Per Ply (lbs)

Chords	Tens.	Comp.	Chords	Tens.	Comp.
B - M	1323	- 466	K - J	1321	- 493
M - L	1322	- 466	J - I	1321	- 493
L - K	971	- 291	I - G	1323	- 492

Maximum Web Forces Per Ply (lbs)

Webs	Tens.	Comp.	Webs	Tens.	Comp.
C - L	222	- 393	K - F	221	- 394

Lumber
Top chord: 2x4 SP #1;
Bot chord: 2x4 SP #1;
Webs: 2x4 SP #3;

Plating Notes
Plates sized for a minimum of 3.50 sq.in./piece.

Purlins
In lieu of structural panels or rigid ceiling use purlins to laterally brace chords as follows:

Chord	Spacing(in oc)	Start(ft)	End(ft)
TC	52	-2.07	12.00
TC	24	12.00	13.33
TC	52	13.33	27.40
BC	120	0.17	25.16

Apply purlins to any chords above or below fillers at 24" OC unless shown otherwise above.

Wind
Wind loads based on MWFRS with additional C&C member design.

DOUGLAS FLEMING
LICENSE
No. 66648
STATE OF
FLORIDA
PROFESSIONAL ENGINEER

COA #0 278

09/15/2020

****WARNING**** READ AND FOLLOW ALL NOTES ON THIS DRAWING!
****IMPORTANT**** FURNISH THIS DRAWING TO ALL CONTRACTORS INCLUDING THE INSTALLERS

Trusses require extreme care in fabricating, handling, shipping, installing and bracing. Refer to and follow the latest edition of BCSI (Building Component Safety Information, by TPI and SBCA) for safety practices prior to performing these functions. Installers shall provide temporary bracing per BCSI. Unless noted otherwise, top chord shall have properly attached structural sheathing and bottom chord shall have a properly attached rigid ceiling. Locations shown for permanent lateral restraint of webs shall have bracing installed per BCSI sections B3, B7, or B10, as applicable. Apply plates to each face of truss and position as shown above and on the Joint Details, unless noted otherwise. Refer to drawings 160A-Z for standard plate positions. Refer to job's General Notes page for additional information.

Alpine, a division of ITW Building Components Group Inc. shall not be responsible for any deviation from this drawing, any failure to build the truss in conformance with ANSI/TPI 1, or for handling, shipping, installation and bracing of trusses. A seal on this drawing or cover page listing this drawing, indicates acceptance of professional engineering responsibility solely for the design shown. The suitability and use of this drawing for any structure is the responsibility of the Building Designer per ANSI/TPI 1 Sec.2.

For more information see these web sites: Alpine: www.alpineitw.com; TPI: www.tpinst.org; SBCA: www.sbcindustry.com; ICC: www.iccsafe.org

ALPINE
AN ITW COMPANY
6750 Forum Drive
Suite 305
Orlando FL, 32821

SEQN: 65882 HIPS	Ply: 1	**Job Number:** b51385aa	Cust: R 857 JRef:1WYP8570001 T59
FROM: RNB	Qty: 1	-terrell floor plan Trademark Const Group	DrwNo: 259.20.1000.45703
Page 1 of 2		**Truss Label:** H16A	SSB / DF 09/15/2020

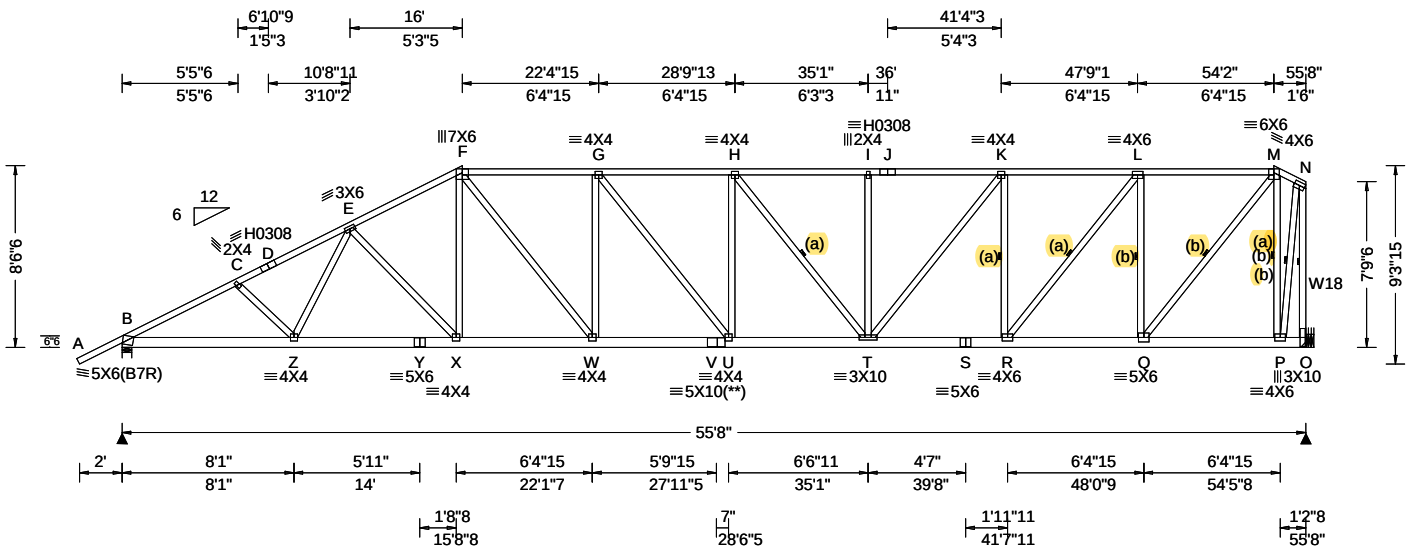

Loading Criteria (psf)

TCLL: 20.00
TCDL: 7.00
BCLL: 0.00
BCDL: 10.00
Des Ld: 37.00
NCBCLL: 10.00
Soffit: 2.00
Load Duration: 1.25
Spacing: 24.0 "

Wind Criteria

Wind Std: ASCE 7-10
Speed: 130 mph
Enclosure: Closed
Risk Category: II
EXP: B Kzt: NA
Mean Height: 15.00 ft
TCDL: 0.0 psf
BCDL: 0.0 psf
MWFRS Parallel Dist: h to 2h
C&C Dist a: 5.57 ft
Loc. from endwall: not in 13.00 ft
GCpi: 0.18
Wind Duration: 1.60

Snow Criteria (Pg,Pf in PSF)

Pg: NA Ct: NA CAT: NA
Pf: NA Ce: NA
Lu: NA Cs: NA
Snow Duration: NA

Building Code:
FBC 2017 RES
TPI Std: 2014
Rep Fac: Yes
FT/RT:20(0)/0(0)
Plate Type(s):
WAVE, HS

Defl/CSI Criteria

PP Deflection in	loc	L/defl	L/#
VERT(LL): 0.319	H	999	360
VERT(CL): 0.600	H	999	240
HORZ(LL): 0.074	F	-	-
HORZ(TL): 0.140	F	-	-

Creep Factor: 2.0
Max TC CSI: 0.983
Max BC CSI: 0.962
Max Web CSI: 0.975

VIEW Ver: 18.02.01A.0205.19

▲Maximum Reactions (lbs)

Loc	Gravity R+	/ R-	/ Rh	Non-Gravity / Rw	/ U	/ RL
B	2238	/-	/-	/1204	/591	/246
O	2097	/-	/-	/987	/642	/-

Wind reactions based on MWFRS
B Brg Width = 5.5 Min Req = 2.8
O Brg Width = - Min Req = -
Bearing B Fcperp = 425psi.
Members not listed have forces less than 375#

Maximum Top Chord Forces Per Ply (lbs)

Chords	Tens.	Comp.	Chords	Tens.	Comp.
B - C	1716	- 3960	H - I	1656	- 3411
C - D	1670	- 3780	I - J	1656	- 3411
D - E	1670	- 3743	J - K	1656	- 3411
E - F	1572	- 3381	K - L	1369	- 2762
F - G	1690	- 3489	L - M	924	- 1751
G - H	1758	- 3646			

Maximum Bot Chord Forces Per Ply (lbs)

Chords	Tens.	Comp.	Chords	Tens.	Comp.
B - Z	3465	- 1877	V - U	3508	- 1795
Z - Y	3245	- 1763	U - T	3648	- 1830
Y - X	3245	- 1763	T - S	2803	- 1404
X - W	2962	- 1581	S - R	2803	- 1404
W - V	3508	- 1795	R - Q	1809	- 941

Maximum Web Forces Per Ply (lbs)

Webs	Tens.	Comp.	Webs	Tens.	Comp.
E - X	257	- 392	R - L	1571	- 728
X - F	501	- 213	L - Q	832	- 1649
F - W	870	- 403	Q - M	2277	- 1064
W - G	329	- 583	M - P	997	- 1916
H - T	215	- 385	P - N	1892	- 931
T - K	988	- 477	N - O	939	- 1993
K - R	582	- 1127			

Lumber

Top chord: 2x4 SP #1;
Bot chord: 2x6 SP #1;
Webs: 2x4 SP #3; W18 2x4 SP #1;

Bracing

(a) Continuous lateral restraint equally spaced on member. Or 1x4 #3SRB SPF-S or better "T" reinforcement. 80% length of web member. Attached with 8d Box or Gun (0.113"x2.5",min.)nails @ 6" oc.

(b) Continuous lateral restraint equally spaced on member. Or 2x6 #3 or better "T" reinforcement. 80% length of web member. Attached with 10d Box or Gun (0.128"x3",min.)nails @ 6" oc.

Plating Notes

(**) 1 plate(s) require special positioning. Refer to scaled plate plot details for special positioning requirements.

Plates sized for a minimum of 3.50 sq.in./piece.

Purlins

In lieu of structural panels or rigid ceiling use purlins to laterally brace chords as follows:

Chord	Spacing(in oc)	Start(ft)	End(ft)
TC	31	-2.07	16.00
TC	24	16.00	54.17
TC	20	54.17	55.67
BC	88	0.15	55.67

Apply purlins to any chords above or below fillers at 24" OC unless shown otherwise above.

Wind

Wind loads based on MWFRS with additional C&C member design.

Right end vertical exposed to wind pressure. Deflection meets L/180.

Additional Notes

WARNING: Furnish a copy of this DWG to the installation contractor. Special care must be taken during handling, shipping and installation of trusses. See "WARNING" note below.

DOUGLAS FLEMING LICENSE No. 66648 STATE OF FLORIDA PROFESSIONAL ENGINEER

COA #0 278

09/15/2020

****WARNING**** READ AND FOLLOW ALL NOTES ON THIS DRAWING!
****IMPORTANT**** FURNISH THIS DRAWING TO ALL CONTRACTORS INCLUDING THE INSTALLERS

Trusses require extreme care in fabricating, handling, shipping, installing and bracing. Refer to and follow the latest edition of BCSI (Building Component Safety Information, by TPI and SBCA) for safety practices prior to performing these functions. Installers shall provide temporary bracing per BCSI. Unless noted otherwise, top chord shall have properly attached structural sheathing and bottom chord shall have a properly attached rigid ceiling. Locations shown for permanent lateral restraint of webs shall have bracing installed per BCSI sections B3, B7, or B10, as applicable. Apply plates to each face of truss and position as shown above and on the Joint Details, unless noted otherwise. Refer to drawings 160A-Z for standard plate positions. Refer to job's General Notes page for additional information.

Alpine, a division of ITW Building Components Group Inc. shall not be responsible for any deviation from this drawing, any failure to build the truss in conformance with ANSI/TPI 1, or for handling, shipping, installation and bracing of trusses. A seal on this drawing or cover page listing this drawing, indicates acceptance of professional engineering responsibility solely for the design shown. The suitability and use of this drawing for any structure is the responsibility of the Building Designer per ANSI/TPI 1 Sec.2.

For more information see these web sites: Alpine: www.alpineitw.com; TPI: www.tpinst.org; SBCA: www.sbcindustry.com; ICC: www.iccsafe.org

ALPINE AN ITW COMPANY
6750 Forum Drive
Suite 305
Orlando FL, 32821

Hangers / Ties

Simpson Construction Hardware is specified based on the most current information provided by Simpson Strong-Tie. Please refer to the most recent Simpson Strong-Tie catalog for additional information.

Recommended hanger connections are based on manufacturer tested capacities and calculations. Conditions may exist that require different connections than indicated. Refer to manufacturer publication for additional information.

Bearing at location x=55'5" uses the following support conditions: 55'5"
Bearing O (55'5", 10'1"2) HGUS28
Supporting Member: (3)2x8 SP SS Dense
(36) 0.148"x3" nails into supporting member,
(6) 0.148"x3" nails into supported member.

DOUGLAS FLEMING
LICENSE
No. 66648
STATE OF
FLORIDA
PROFESSIONAL ENGINEER

COA #0 278

09/15/2020

****WARNING**** READ AND FOLLOW ALL NOTES ON THIS DRAWING!
****IMPORTANT**** FURNISH THIS DRAWING TO ALL CONTRACTORS INCLUDING THE INSTALLERS

Trusses require extreme care in fabricating, handling, shipping, installing and bracing. Refer to and follow the latest edition of BCSI (Building Component Safety Information, by TPI and SBCA) for safety practices prior to performing these functions. Installers shall provide temporary bracing per BCSI. Unless noted otherwise, top chord shall have properly attached structural sheathing and bottom chord shall have a properly attached rigid ceiling. Locations shown for permanent lateral restraint of webs shall have bracing installed per BCSI sections B3, B7, or B10, as applicable. Apply plates to each face of truss and position as shown above and on the Joint Details, unless noted otherwise. Refer to drawings 160A-Z for standard plate positions. Refer to job's General Notes page for additional information.

Alpine, a division of ITW Building Components Group Inc. shall not be responsible for any deviation from this drawing, any failure to build the truss in conformance with ANSI/TPI 1, or for handling, shipping, installation and bracing of trusses. A seal on this drawing or cover page listing this drawing, indicates acceptance of professional engineering responsibility solely for the design shown. The suitability and use of this drawing for any structure is the responsibility of the Building Designer per ANSI/TPI 1 Sec.2.

For more information see these web sites: Alpine: www.alpineitw.com; TPI: www.tpinst.org; SBCA: www.sbcindustry.com; ICC: www.iccsafe.org

ALPINE AN ITW COMPANY
6750 Forum Drive
Suite 305
Orlando FL, 32821

SEQN: 65883 HIPS	Ply: 1	**Job Number:** b51385aa	Cust: R 857 JRef:1WYP8570001 T67
FROM: RNB	Qty: 1	-terrell floor plan Trademark Const Group	DrwNo: 259.20.1000.51313
Page 1 of 2		**Truss Label:** H18A	SSB / DF 09/15/2020

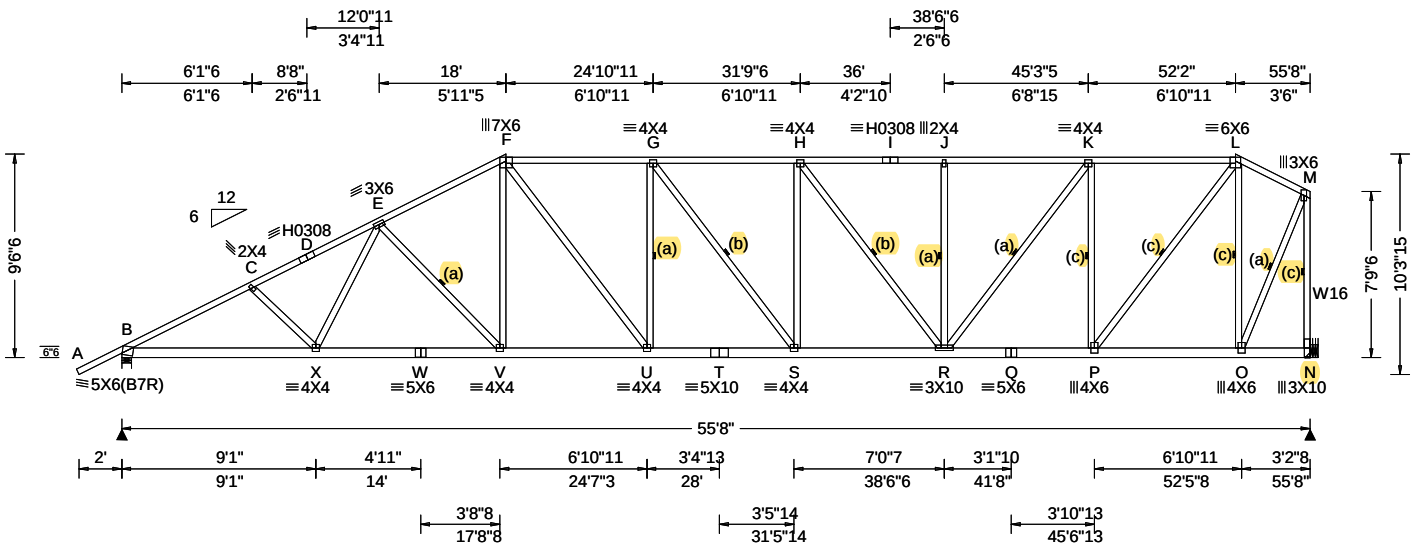

Loading Criteria (psf)

TCLL: 20.00
TCDL: 7.00
BCLL: 0.00
BCDL: 10.00
Des Ld: 37.00
NCBCLL: 10.00
Soffit: 2.00
Load Duration: 1.25
Spacing: 24.0 "

Wind Criteria

Wind Std: ASCE 7-10
Speed: 130 mph
Enclosure: Closed
Risk Category: II
EXP: B Kzt: NA
Mean Height: 15.00 ft
TCDL: 0.0 psf
BCDL: 0.0 psf
MWFRS Parallel Dist: h to 2h
C&C Dist a: 5.57 ft
Loc. from endwall: not in 13.00 ft
GCpi: 0.18
Wind Duration: 1.60

Snow Criteria (Pg,Pf in PSF)

Pg: NA Ct: NA CAT: NA
Pf: NA Ce: NA
Lu: NA Cs: NA
Snow Duration: NA

Building Code:
FBC 2017 RES
TPI Std: 2014
Rep Fac: Yes
FT/RT:20(0)/0(0)
Plate Type(s):
WAVE, HS

Defl/CSI Criteria

PP Deflection in	loc	L/defl	L/#
VERT(LL): 0.273	G	999	360
VERT(CL): 0.513	G	999	240
HORZ(LL): 0.070	O	-	-
HORZ(TL): 0.131	O	-	-

Creep Factor: 2.0
Max TC CSI: 0.993
Max BC CSI: 0.976
Max Web CSI: 0.999

VIEW Ver: 18.02.01A.0205.19

▲Maximum Reactions (lbs)

Loc	Gravity R+	/ R-	/ Rh	Non-Gravity / Rw	/ U	/ RL
B	2238	/-	/-	/1217	/580	/265
N	2097	/-	/-	/983	/611	/-

Wind reactions based on MWFRS
B Brg Width = 5.5 Min Req = 2.8
N Brg Width = - Min Req = -
Bearing B Fcperp = 425psi.
Members not listed have forces less than 375#

Maximum Top Chord Forces Per Ply (lbs)

Chords	Tens.	Comp.	Chords	Tens.	Comp.
B - C	1714	- 3964	H - I	1400	- 2781
C - D	1660	- 3751	I - J	1400	- 2781
D - E	1660	- 3686	J - K	1400	- 2781
E - F	1517	- 3237	K - L	1037	- 1950
F - G	1581	- 3202	L - M	505	- 831
G - H	1580	- 3196			

Maximum Bot Chord Forces Per Ply (lbs)

Chords	Tens.	Comp.	Chords	Tens.	Comp.
B - X	3466	- 1860	T - S	3213	- 1644
X - W	3172	- 1710	S - R	3190	- 1611
W - V	3172	- 1710	R - Q	1995	- 1039
V - U	2822	- 1496	Q - P	1995	- 1039
U - T	3213	- 1644	P - O	776	- 467

Maximum Web Forces Per Ply (lbs)

Webs	Tens.	Comp.	Webs	Tens.	Comp.
X - E	385	- 88	R - K	1312	- 612
E - V	301	- 487	K - P	752	- 1466
V - F	571	- 241	P - L	1994	- 930
F - U	642	- 306	L - O	828	- 1561
U - G	254	- 399	O - M	1822	- 900
H - R	343	- 683	M - N	1017	- 2080

Lumber

Top chord: 2x4 SP #1;
Bot chord: 2x6 SP #1;
Webs: 2x4 SP #3; W16 2x4 SP #1;

Bracing

(a) Continuous lateral restraint equally spaced on member. Or 1x4 #3SRB SPF-S or better "T" reinforcement. 80% length of web member. Attached with 8d Box or Gun (0.113"x2.5",min.)nails @ 6" oc.

(b) Continuous lateral restraint equally spaced on member. Or 2x4 #3 or better "T" reinforcement. 80% length of web member. Attached with 10d Box or Gun (0.128"x3",min.)nails @ 6" oc.

(c) Continuous lateral restraint equally spaced on member. Or 2x6 #3 or better "T" reinforcement. 80% length of web member. Attached with 10d Box or Gun (0.128"x3",min.)nails @ 6" oc.

Plating Notes

Plates sized for a minimum of 3.50 sq.in./piece.

Purlins

In lieu of structural panels or rigid ceiling use purlins to laterally brace chords as follows:

Chord	Spacing(in oc)	Start(ft)	End(ft)
TC	31	-2.07	18.00
TC	24	18.00	52.17
TC	47	52.17	55.67
BC	89	0.15	55.67

Apply purlins to any chords above or below fillers at 24" OC unless shown otherwise above.

Wind

Wind loads based on MWFRS with additional C&C member design.

Right end vertical exposed to wind pressure. Deflection meets L/180.

Additional Notes

WARNING: Furnish a copy of this DWG to the installation contractor. Special care must be taken during handling, shipping and installation of trusses. See "WARNING" note below.

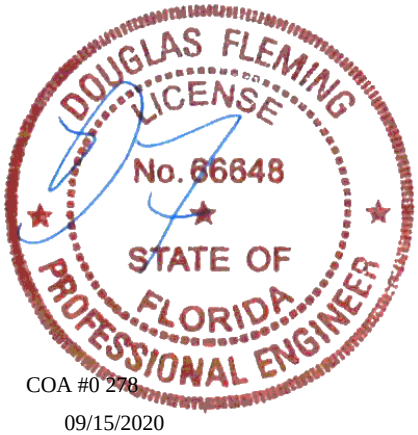

COA #0 278

09/15/2020

****WARNING**** READ AND FOLLOW ALL NOTES ON THIS DRAWING!
****IMPORTANT**** FURNISH THIS DRAWING TO ALL CONTRACTORS INCLUDING THE INSTALLERS

Trusses require extreme care in fabricating, handling, shipping, installing and bracing. Refer to and follow the latest edition of BCSI (Building Component Safety Information, by TPI and SBCA) for safety practices prior to performing these functions. Installers shall provide temporary bracing per BCSI. Unless noted otherwise, top chord shall have properly attached structural sheathing and bottom chord shall have a properly attached rigid ceiling. Locations shown for permanent lateral restraint of webs shall have bracing installed per BCSI sections B3, B7, or B10, as applicable. Apply plates to each face of truss and position as shown above and on the Joint Details, unless noted otherwise. Refer to drawings 160A-Z for standard plate positions. Refer to job's General Notes page for additional information.

Alpine, a division of ITW Building Components Group Inc. shall not be responsible for any deviation from this drawing, any failure to build the truss in conformance with ANSI/TPI 1, or for handling, shipping, installation and bracing of trusses. A seal on this drawing or cover page listing this drawing, indicates acceptance of professional engineering responsibility solely for the design shown. The suitability and use of this drawing for any structure is the responsibility of the Building Designer per ANSI/TPI 1 Sec.2.

For more information see these web sites: Alpine: www.alpineitw.com; TPI: www.tpinst.org; SBCA: www.sbcindustry.com; ICC: www.iccsafe.org

ALPINE AN ITW COMPANY
6750 Forum Drive
Suite 305
Orlando FL, 32821

Hangers / Ties

Simpson Construction Hardware is specified based on the most current information provided by Simpson Strong-Tie. Please refer to the most recent Simpson Strong-Tie catalog for additional information.

Recommended hanger connections are based on manufacturer tested capacities and calculations. Conditions may exist that require different connections than indicated. Refer to manufacturer publication for additional information.

Bearing at location x=55'5" uses the following support conditions: 55'5"
Bearing N (55'5", 10'1"2) HGUS28
Supporting Member: (3)2x8 SP SS Dense
(36) 0.148"x3" nails into supporting member,
(6) 0.148"x3" nails into supported member.

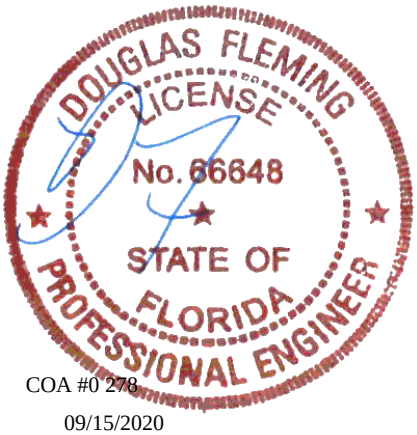

COA #0 278

09/15/2020

****WARNING**** READ AND FOLLOW ALL NOTES ON THIS DRAWING!
****IMPORTANT**** FURNISH THIS DRAWING TO ALL CONTRACTORS INCLUDING THE INSTALLERS

Trusses require extreme care in fabricating, handling, shipping, installing and bracing. Refer to and follow the latest edition of BCSI (Building Component Safety Information, by TPI and SBCA) for safety practices prior to performing these functions. Installers shall provide temporary bracing per BCSI. Unless noted otherwise, top chord shall have properly attached structural sheathing and bottom chord shall have a properly attached rigid ceiling. Locations shown for permanent lateral restraint of webs shall have bracing installed per BCSI sections B3, B7, or B10, as applicable. Apply plates to each face of truss and position as shown above and on the Joint Details, unless noted otherwise. Refer to drawings 160A-Z for standard plate positions. Refer to job's General Notes page for additional information.

Alpine, a division of ITW Building Components Group Inc. shall not be responsible for any deviation from this drawing, any failure to build the truss in conformance with ANSI/TPI 1, or for handling, shipping, installation and bracing of trusses. A seal on this drawing or cover page listing this drawing, indicates acceptance of professional engineering responsibility solely for the design shown. The suitability and use of this drawing for any structure is the responsibility of the Building Designer per ANSI/TPI 1 Sec.2.

For more information see these web sites: Alpine: www.alpineitw.com; TPI: www.tpinst.org; SBCA: www.sbcindustry.com; ICC: www.iccsafe.org

ALPINE AN ITW COMPANY
6750 Forum Drive
Suite 305
Orlando FL, 32821

SEQN: 65884 HIPS	Ply: 1	**Job Number:** b51385aa	Cust: R 857 JRef:1WYP8570001 T31
FROM: RNB	Qty: 1	-terrell floor plan Trademark Const Group	DrwNo: 259.20.1000.53570
		Truss Label: H7A	SSB / DF 09/15/2020

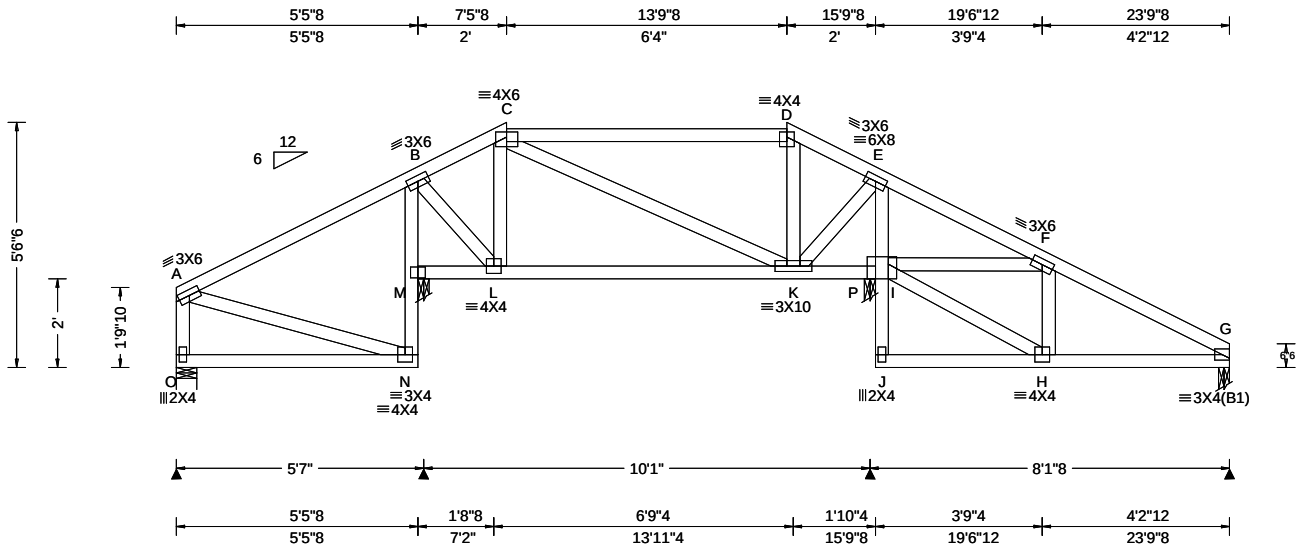

Loading Criteria (psf)

TCLL:	20.00
TCDL:	7.00
BCLL:	0.00
BCDL:	10.00
Des Ld:	37.00
NCBCLL:	10.00
Soffit:	2.00

Load Duration: 1.25
Spacing: 24.0 "

Wind Criteria
Wind Std: ASCE 7-10
Speed: 130 mph
Enclosure: Closed
Risk Category: II
EXP: B Kzt: NA
Mean Height: 15.13 ft
TCDL: 0.0 psf
BCDL: 0.0 psf
MWFRS Parallel Dist: h/2 to h
C&C Dist a: 3.00 ft
Loc. from endwall: not in 9.00 ft
GCpi: 0.18
Wind Duration: 1.60

Snow Criteria (Pg,Pf in PSF)
Pg: NA Ct: NA CAT: NA
Pf: NA Ce: NA
Lu: NA Cs: NA
Snow Duration: NA

Building Code:
FBC 2017 RES
TPI Std: 2014
Rep Fac: Yes
FT/RT:20(0)/0(0)
Plate Type(s):
WAVE

Defl/CSI Criteria

PP Deflection in	loc	L/defl	L/#
VERT(LL): 0.004	F	999	360
VERT(CL): 0.007	F	999	240
HORZ(LL): 0.004	F	-	-
HORZ(TL): 0.004	F	-	-

Creep Factor: 2.0
Max TC CSI: 0.310
Max BC CSI: 0.259
Max Web CSI: 0.159

VIEW Ver: 18.02.01A.0205.19

▲Maximum Reactions (lbs)

	Gravity			Non-Gravity		
Loc	R+	/ R-	/ Rh	/ Rw	/ U	/ RL
O	181	/-	/-	/125	/88	/87
M	620	/-	/-	/378	/162	/-
P	734	/-	/-	/395	/227	/-
G	280	/-	/-	/168	/96	/-

Wind reactions based on MWFRS
O Brg Width = 5.5 Min Req = 1.5
M Brg Width = 3.0 Min Req = 1.5
P Brg Width = 3.0 Min Req = 1.5
G Brg Width = 3.0 Min Req = 1.5
Bearings O, M, P, & G Fcperp = 425psi.
Members not listed have forces less than 375#

Maximum Web Forces Per Ply (lbs)

Webs	Tens.	Comp.	Webs	Tens.	Comp.
M - B	250	- 577	E - I	276	- 559
K - E	418	- 169			

Lumber
Top chord: 2x4 SP #1;
Bot chord: 2x4 SP #1;
Webs: 2x4 SP #3;

Plating Notes
Plates sized for a minimum of 3.50 sq.in./piece.

Purlins
In lieu of structural panels or rigid ceiling use purlins to laterally brace chords as follows:

Chord	Spacing(in oc)	Start(ft)	End(ft)
TC	75	0.00	7.46
TC	24	7.46	13.79
TC	75	13.79	23.69
BC	62	0.00	5.17
BC	75	5.27	15.90
BC	92	15.94	23.62

Apply purlins to any chords above or below fillers at 24" OC unless shown otherwise above.

Wind
Wind loads based on MWFRS with additional C&C member design.

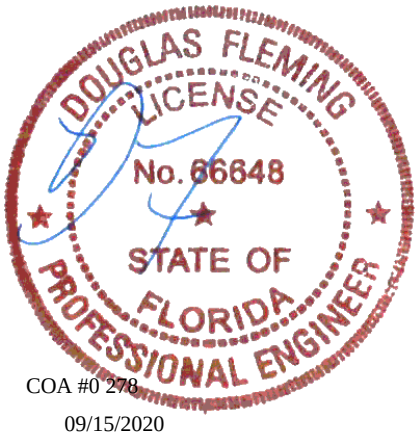

COA #0 278

09/15/2020

****WARNING**** READ AND FOLLOW ALL NOTES ON THIS DRAWING!
****IMPORTANT**** FURNISH THIS DRAWING TO ALL CONTRACTORS INCLUDING THE INSTALLERS

Trusses require extreme care in fabricating, handling, shipping, installing and bracing. Refer to and follow the latest edition of BCSI (Building Component Safety Information, by TPI and SBCA) for safety practices prior to performing these functions. Installers shall provide temporary bracing per BCSI. Unless noted otherwise, top chord shall have properly attached structural sheathing and bottom chord shall have a properly attached rigid ceiling. Locations shown for permanent lateral restraint of webs shall have bracing installed per BCSI sections B3, B7, or B10, as applicable. Apply plates to each face of truss and position as shown above and on the Joint Details, unless noted otherwise. Refer to drawings 160A-Z for standard plate positions. Refer to job's General Notes page for additional information.

Alpine, a division of ITW Building Components Group Inc. shall not be responsible for any deviation from this drawing, any failure to build the truss in conformance with ANSI/TPI 1, or for handling, shipping, installation and bracing of trusses. A seal on this drawing or cover page listing this drawing, indicates acceptance of professional engineering responsibility solely for the design shown. The suitability and use of this drawing for any structure is the responsibility of the Building Designer per ANSI/TPI 1 Sec.2.

For more information see these web sites: Alpine: www.alpineitw.com; TPI: www.tpinst.org; SBCA: www.sbcindustry.com; ICC: www.iccsafe.org

ALPINE AN ITW COMPANY
6750 Forum Drive
Suite 305
Orlando FL, 32821

SEQN: 65944 HIPS	Ply: 3	**Job Number:** b51385aa	Cust: R 857 JRef:1WYP8570001 T51
FROM: RNB	Qty: 1	-terrell floor plan Trademark Const Group	DrwNo: 259.20.1001.15750
Page 1 of 2		**Truss Label:** HG19A	SSB / DF 09/15/2020

3 Complete Trusses Required

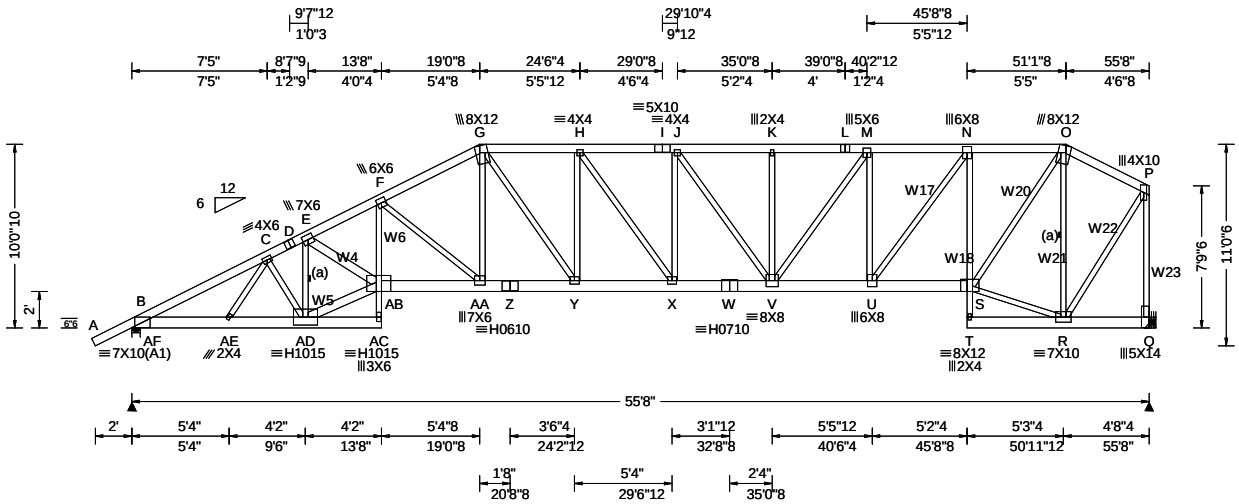

Loading Criteria (psf)
TCLL: 20.00
TCDL: 7.00
BCLL: 0.00
BCDL: 10.00
Des Ld: 37.00
NCBCLL: 0.00
Soffit: 2.00
Load Duration: 1.25
Spacing: 24.0 "

Wind Criteria
Wind Std: ASCE 7-10
Speed: 130 mph
Enclosure: Closed
Risk Category: II
EXP: B Kzt: NA
Mean Height: 15.00 ft
TCDL: 0.0 psf
BCDL: 0.0 psf
MWFRS Parallel Dist: 0 to h/2
C&C Dist a: 5.57 ft
Loc. from endwall: Any
GCpi: 0.18
Wind Duration: 1.60

Snow Criteria (Pg,Pf in PSF)
Pg: NA Ct: NA CAT: NA
Pf: NA Ce: NA
Lu: NA Cs: NA
Snow Duration: NA

Building Code:
FBC 2017 RES
TPI Std: 2014
Rep Fac: Yes
FT/RT:20(0)/0(0)
Plate Type(s):
WAVE, HS

Defl/CSI Criteria
PP Deflection in loc L/defl L/#
VERT(LL): 0.610 X 999 360
VERT(CL): 1.122 X 593 240
HORZ(LL): 0.269 R - -
HORZ(TL): 0.495 R - -
Creep Factor: 2.0
Max TC CSI: 0.994
Max BC CSI: 0.593
Max Web CSI: 0.956

VIEW Ver: 18.02.01A.0205.19

▲Maximum Reactions (lbs)

	Gravity			Non-Gravity	
Loc	R+ / R-	/ Rh	/ Rw	/ U	/ RL
AF	11343 / -	/ -	/ -	/3390	/101
Q	11703 / -	/ -	/ -	/3468	/ -

Wind reactions based on MWFRS
AF Brg Width = 5.5 Min Req = 5.5
Q Brg Width = - Min Req = -
Bearing AF Fcperp = 425psi.
Members not listed have forces less than 375#

Maximum Top Chord Forces Per Ply (lbs)

Chords	Tens.	Comp.	Chords	Tens.	Comp.
B - C	2317	- 7792	I - J	2763	- 9333
C - D	2367	- 7973	J - K	2584	- 8726
D - E	2363	- 7963	K - L	2584	- 8726
E - F	3330	- 11288	L - M	2584	- 8726
F - G	2679	- 9048	M - N	2152	- 7263
G - H	2686	- 9074	N - O	1468	- 4937
H - I	2763	- 9333	O - P	647	- 2131

Maximum Bot Chord Forces Per Ply (lbs)

Chords	Tens.	Comp.	Chords	Tens.	Comp.
B -AE	6945	- 2029	Y - X	9088	- 2657
AE-AD	7079	- 2070	X - W	9305	- 2722
AB-AA	10100	- 2945	W - V	9305	- 2722
AA- Z	8094	- 2362	V - U	7345	- 2143
Z - Y	8094	- 2362	U - S	4997	- 1452

Maximum Web Forces Per Ply (lbs)

Webs	Tens.	Comp.	Webs	Tens.	Comp.
AD- E	977	- 3354	V - M	2434	- 716
AD-AB	8023	- 2342	M - U	634	- 2108
E -AB	3511	- 1021	U - N	3992	- 1174
AB- F	2711	- 783	N - S	1005	- 3370
F -AA	766	- 2633	S - R	1937	- 551
G -AA	2492	- 729	S - O	5375	- 1580
G - Y	1724	- 512	R - O	1052	- 3560
H - X	440	- 130	R - P	3474	- 1021
X - J	720	- 200	P - Q	1159	- 3898
J - V	302	- 1019			

Lumber

Top chord: 2x6 SP #1;
Bot chord: 2x8 SP SS Dense;
Webs: 2x4 SP #3; W4,W5 2x6 SP #1; W6,W17,W18,W20, W21,W22,W23 2x4 SP #1;

Bracing

(a) Continuous lateral restraint equally spaced on member.

Nailnote

Nail Schedule:0.128"x3", min. nails
Top Chord: 1 Row @12.00" o.c.
Bot Chord: 1 Row @ 4.25" o.c.
Webs : 1 Row @ 4" o.c.
Repeat nailing as each layer is applied. Use equal spacing between rows and stagger nails in each row to avoid splitting.
(1) 1/2" bolts may be used for
(2) 0.128"x3", min. nails on
Either The Top or Bottom Chords.

Plating Notes

All plates are 5X6 except as noted.

Plates sized for a minimum of 3.50 sq.in./piece.

Hangers / Ties

(J) Hanger Support Required, by others

Wind

Wind loads and reactions based on MWFRS.

Right end vertical exposed to wind pressure.
Deflection meets L/180.

Purlins

In lieu of structural panels or rigid ceiling use purlins to laterally brace chords as follows:

Chord	Spacing(in oc)	Start(ft)	End(ft)
TC	23	-2.10	19.04
TC	24	19.04	51.12
TC	61	51.12	55.67
BC	120	0.15	13.52
BC	120	13.53	45.82
BC	118	45.85	55.67

Apply purlins to any chords above or below fillers at 24" OC unless shown otherwise above.

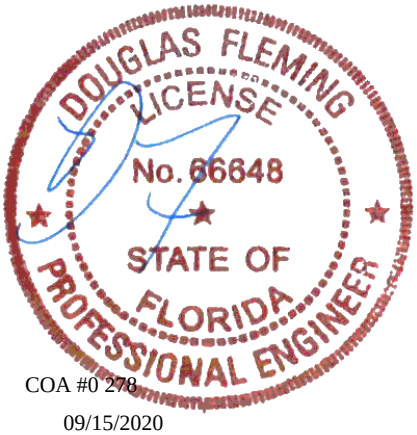

COA #0 278

09/15/2020

****WARNING**** READ AND FOLLOW ALL NOTES ON THIS DRAWING!
****IMPORTANT**** FURNISH THIS DRAWING TO ALL CONTRACTORS INCLUDING THE INSTALLERS

Trusses require extreme care in fabricating, handling, shipping, installing and bracing. Refer to and follow the latest edition of BCSI (Building Component Safety Information, by TPI and SBCA) for safety practices prior to performing these functions. Installers shall provide temporary bracing per BCSI. Unless noted otherwise, top chord shall have properly attached structural sheathing and bottom chord shall have a properly attached rigid ceiling. Locations shown for permanent lateral restraint of webs shall have bracing installed per BCSI sections B3, B7, or B10, as applicable. Apply plates to each face of truss and position as shown above and on the Joint Details, unless noted otherwise. Refer to drawings 160A-Z for standard plate positions. Refer to job's General Notes page for additional information.

Alpine, a division of ITW Building Components Group Inc. shall not be responsible for any deviation from this drawing, any failure to build the truss in conformance with ANSI/TPI 1, or for handling, shipping, installation and bracing of trusses. A seal on this drawing or cover page listing this drawing, indicates acceptance of professional engineering responsibility solely for the design shown. The suitability and use of this drawing for any structure is the responsibility of the Building Designer per ANSI/TPI 1 Sec.2.

For more information see these web sites: Alpine: www.alpineitw.com; TPI: www.tpinst.org; SBCA: www.sbcindustry.com; ICC: www.iccsafe.org

ALPINE AN ITW COMPANY
6750 Forum Drive
Suite 305
Orlando FL, 32821

Special Loads

------(Lumber Dur.Fac.=1.25 / Plate Dur.Fac.=1.25)

TC: From	56 plf at	-2.20 to	56 plf at	8.53
TC: From	28 plf at	8.53 to	28 plf at	26.10
TC: From	56 plf at	26.10 to	56 plf at	55.67
BC: From	4 plf at	-2.20 to	4 plf at	0.00
BC: From	20 plf at	0.00 to	20 plf at	8.19
BC: From	10 plf at	8.19 to	10 plf at	45.71
BC: From	20 plf at	45.71 to	20 plf at	55.67

BC: 608 lb Conc. Load at 8.19
BC: 384 lb Conc. Load at 10.10
BC: 374 lb Conc. Load at 12.10
BC: 769 lb Conc. Load at 14.10
BC: 767 lb Conc. Load at 16.10
BC: 1187 lb Conc. Load at 18.10
BC: 1191 lb Conc. Load at 20.10,22.10
BC: 1197 lb Conc. Load at 24.10,26.10,28.10,30.10 32.10,34.10,36.10,38.10
BC: 1174 lb Conc. Load at 40.10,42.10,44.10

Additional Notes

WARNING: Furnish a copy of this DWG to the installation contractor. Special care must be taken during handling, shipping and installation of trusses. See "WARNING" note below.

It is the responsibility of the Building Designer and Truss Fabricator to review this drawing prior to cutting lumber to verify that all data,including dimensions and loads, conform to the architectural plans/specifications and fabricators truss layout.

DOUGLAS FLEMING
LICENSE
No. 66648
STATE OF
FLORIDA
PROFESSIONAL ENGINEER

COA #0 278

09/15/2020

****WARNING**** READ AND FOLLOW ALL NOTES ON THIS DRAWING!
****IMPORTANT**** FURNISH THIS DRAWING TO ALL CONTRACTORS INCLUDING THE INSTALLERS

Trusses require extreme care in fabricating, handling, shipping, installing and bracing. Refer to and follow the latest edition of BCSI (Building Component Safety Information, by TPI and SBCA) for safety practices prior to performing these functions. Installers shall provide temporary bracing per BCSI. Unless noted otherwise, top chord shall have properly attached structural sheathing and bottom chord shall have a properly attached rigid ceiling. Locations shown for permanent lateral restraint of webs shall have bracing installed per BCSI sections B3, B7, or B10, as applicable. Apply plates to each face of truss and position as shown above and on the Joint Details, unless noted otherwise. Refer to drawings 160A-Z for standard plate positions. Refer to job's General Notes page for additional information.

Alpine, a division of ITW Building Components Group Inc. shall not be responsible for any deviation from this drawing, any failure to build the truss in conformance with ANSI/TPI 1, or for handling, shipping, installation and bracing of trusses. A seal on this drawing or cover page listing this drawing, indicates acceptance of professional engineering responsibility solely for the design shown. The suitability and use of this drawing for any structure is the responsibility of the Building Designer per ANSI/TPI 1 Sec.2.

For more information see these web sites: Alpine: www.alpineitw.com; TPI: www.tpinst.org; SBCA: www.sbcindustry.com; ICC: www.iccsafe.org

ALPINE
AN ITW COMPANY
6750 Forum Drive
Suite 305
Orlando FL, 32821

SEQN: 65937 HIPS FROM: RNB	Ply: 1 Qty: 1	**Job Number:** b51385aa -terrell floor plan Trademark Const Group **Truss Label:** HG4A	Cust: R 857 JRef:1WYP8570001 T79 DrwNo: 259.20.1001.17690 SSB / DF 09/15/2020

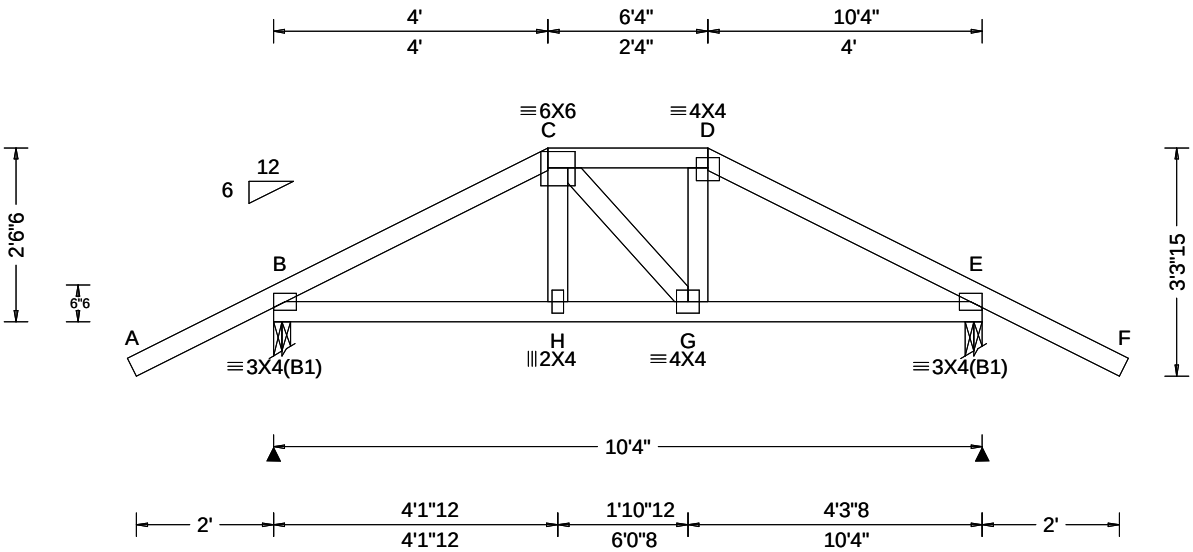

Loading Criteria (psf)

TCLL: 20.00
TCDL: 7.00
BCLL: 0.00
BCDL: 10.00
Des Ld: 37.00
NCBCLL: 10.00
Soffit: 2.00
Load Duration: 1.25
Spacing: 24.0 "

Wind Criteria

Wind Std: ASCE 7-10
Speed: 130 mph
Enclosure: Closed
Risk Category: II
EXP: B Kzt: NA
Mean Height: 15.09 ft
TCDL: 0.0 psf
BCDL: 0.0 psf
MWFRS Parallel Dist: 0 to h/2
C&C Dist a: 3.00 ft
Loc. from endwall: Any
GCpi: 0.18
Wind Duration: 1.60

Snow Criteria (Pg,Pf in PSF)

Pg: NA Ct: NA CAT: NA
Pf: NA Ce: NA
Lu: NA Cs: NA
Snow Duration: NA

Building Code:
FBC 2017 RES
TPI Std: 2014
Rep Fac: Varies by Ld Case
FT/RT:20(0)/0(0)
Plate Type(s):
WAVE

Defl/CSI Criteria

PP Deflection in	loc	L/defl	L/#
VERT(LL): 0.028	H	999	360
VERT(CL): 0.051	H	999	240
HORZ(LL): 0.014	G	-	-
HORZ(TL): 0.026	G	-	-

Creep Factor: 2.0
Max TC CSI: 0.996
Max BC CSI: 0.467
Max Web CSI: 0.080

VIEW Ver: 18.02.01A.0205.19

▲Maximum Reactions (lbs)

Loc	Gravity R+	Gravity / R-	Gravity / Rh	Non-Gravity / Rw	Non-Gravity / U	Non-Gravity / RL
B	833	/-	/-	/-	/254	/-
E	833	/-	/-	/-	/254	/-

Wind reactions based on MWFRS
B Brg Width = 3.0 Min Req = 1.5
E Brg Width = 3.0 Min Req = 1.5
Bearings B & E Fcperp = 425psi.
Members not listed have forces less than 375#

Maximum Top Chord Forces Per Ply (lbs)

Chords	Tens.	Comp.	Chords	Tens.	Comp.
B - C	301	- 1067	D - E	302	- 1066
C - D	243	- 913			

Maximum Bot Chord Forces Per Ply (lbs)

Chords	Tens.	Comp.	Chords	Tens.	Comp.
B - H	886	- 242	G - E	886	- 243
H - G	899	- 242			

Lumber

Top chord: 2x4 SP #1;
Bot chord: 2x4 SP #1;
Webs: 2x4 SP #3;

Wind

Wind loads and reactions based on MWFRS.

Special Loads

------(Lumber Dur.Fac.=1.25 / Plate Dur.Fac.=1.25)

TC: From	56 plf at	-2.13 to	56 plf at	4.00
TC: From	28 plf at	4.00 to	28 plf at	6.33
TC: From	56 plf at	6.33 to	56 plf at	12.46
BC: From	4 plf at	-2.13 to	4 plf at	0.00
BC: From	20 plf at	0.00 to	20 plf at	4.03
BC: From	10 plf at	4.03 to	10 plf at	6.30
BC: From	20 plf at	6.30 to	20 plf at	10.33
BC: From	4 plf at	10.33 to	4 plf at	12.46

TC: 114 lb Conc. Load at 4.03, 6.30
TC: 79 lb Conc. Load at 5.17
BC: 172 lb Conc. Load at 4.03, 6.30
BC: 72 lb Conc. Load at 5.17

Plating Notes

Plates sized for a minimum of 3.50 sq.in./piece.

Purlins

In lieu of structural panels or rigid ceiling use purlins to laterally brace chords as follows:

Chord	Spacing(in oc)	Start(ft)	End(ft)
TC	61	-2.07	4.00
TC	24	4.00	6.33
TC	61	6.33	12.40
BC	120	0.17	10.16

Apply purlins to any chords above or below fillers at 24" OC unless shown otherwise above.

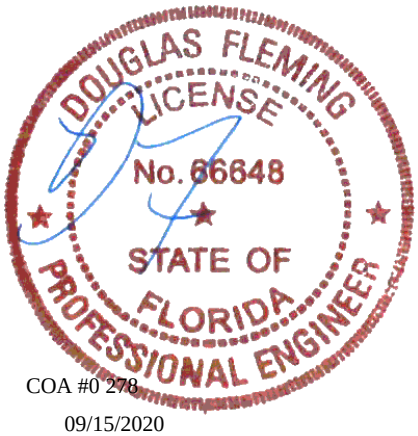

COA #0 278

09/15/2020

****WARNING**** READ AND FOLLOW ALL NOTES ON THIS DRAWING!
****IMPORTANT**** FURNISH THIS DRAWING TO ALL CONTRACTORS INCLUDING THE INSTALLERS

Trusses require extreme care in fabricating, handling, shipping, installing and bracing. Refer to and follow the latest edition of BCSI (Building Component Safety Information, by TPI and SBCA) for safety practices prior to performing these functions. Installers shall provide temporary bracing per BCSI. Unless noted otherwise, top chord shall have properly attached structural sheathing and bottom chord shall have a properly attached rigid ceiling. Locations shown for permanent lateral restraint of webs shall have bracing installed per BCSI sections B3, B7, or B10, as applicable. Apply plates to each face of truss and position as shown above and on the Joint Details, unless noted otherwise. Refer to drawings 160A-Z for standard plate positions. Refer to job's General Notes page for additional information.

Alpine, a division of ITW Building Components Group Inc. shall not be responsible for any deviation from this drawing, any failure to build the truss in conformance with ANSI/TPI 1, or for handling, shipping, installation and bracing of trusses. A seal on this drawing or cover page listing this drawing, indicates acceptance of professional engineering responsibility solely for the design shown. The suitability and use of this drawing for any structure is the responsibility of the Building Designer per ANSI/TPI 1 Sec.2.

For more information see these web sites: Alpine: www.alpineitw.com; TPI: www.tpinst.org; SBCA: www.sbcindustry.com; ICC: www.iccsafe.org

ALPINE AN ITW COMPANY
6750 Forum Drive
Suite 305
Orlando FL, 32821

SEQN: 65938 HIPS FROM: RNB	Ply: 1 Qty: 1	**Job Number:** b51385aa -terrell floor plan Trademark Const Group **Truss Label:** HG8A	Cust: R 857 JRef:1WYP8570001 T13 DrwNo: 259.20.1001.19763 SSB / DF 09/15/2020

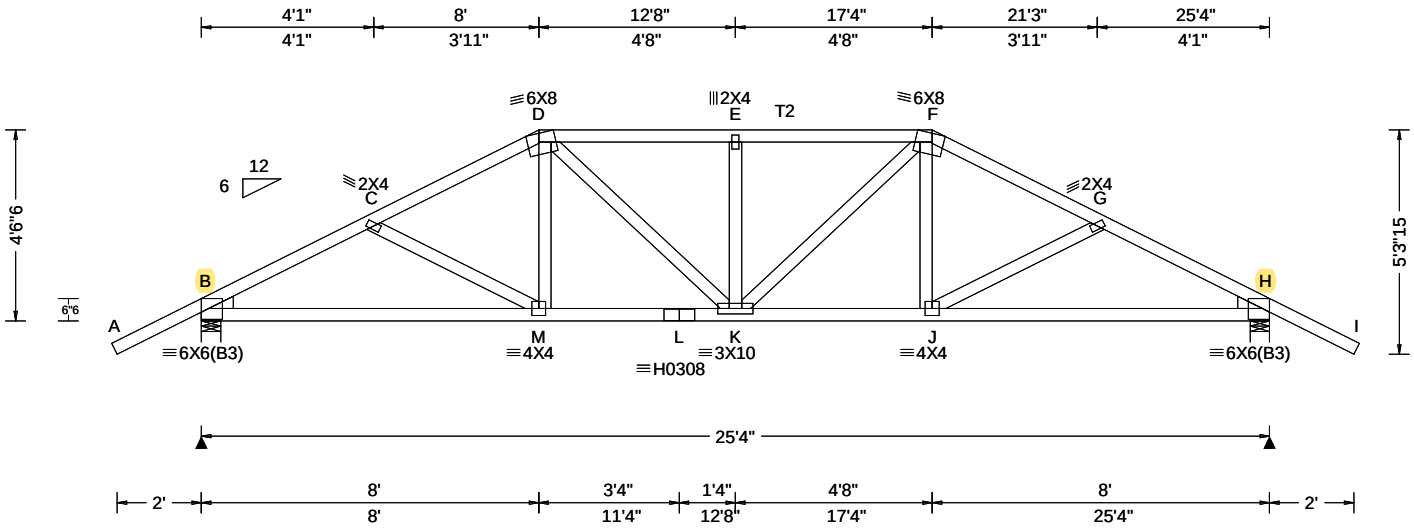

Loading Criteria (psf)

TCLL: 20.00
TCDL: 7.00
BCLL: 0.00
BCDL: 10.00
Des Ld: 37.00
NCBCLL: 10.00
Soffit: 2.00
Load Duration: 1.25
Spacing: 24.0 "

Wind Criteria

Wind Std: ASCE 7-10
Speed: 130 mph
Enclosure: Closed
Risk Category: II
EXP: B Kzt: NA
Mean Height: 15.00 ft
TCDL: 0.0 psf
BCDL: 0.0 psf
MWFRS Parallel Dist: 0 to h/2
C&C Dist a: 3.00 ft
Loc. from endwall: Any
GCpi: 0.18
Wind Duration: 1.60

Snow Criteria (Pg,Pf in PSF)

Pg: NA Ct: NA CAT: NA
Pf: NA Ce: NA
Lu: NA Cs: NA
Snow Duration: NA

Building Code:
FBC 2017 RES
TPI Std: 2014
Rep Fac: Varies by Ld Case
FT/RT:20(0)/0(0)
Plate Type(s):
WAVE, HS

Defl/CSI Criteria

PP Deflection in	loc	L/defl	L/#
VERT(LL): 0.199	E	999	360
VERT(CL): 0.366	E	824	240
HORZ(LL): 0.083	J	-	-
HORZ(TL): 0.152	J	-	-

Creep Factor: 2.0
Max TC CSI: 0.966
Max BC CSI: 0.969
Max Web CSI: 0.297

VIEW Ver: 18.02.01A.0205.19

▲Maximum Reactions (lbs)

Loc	Gravity R+	/ R-	/ Rh	Non-Gravity / Rw	/ U	/ RL
B	2319	/-	/-	/-	/814	/-
H	2319	/-	/-	/-	/814	/-

Wind reactions based on MWFRS
B Brg Width = 5.5 Min Req = 2.9
H Brg Width = 5.5 Min Req = 2.9
Bearings B & H Fcperp = 425psi.
Members not listed have forces less than 375#

Maximum Top Chord Forces Per Ply (lbs)

Chords	Tens.	Comp.	Chords	Tens.	Comp.
B - C	1429	- 4023	E - F	1469	- 4101
C - D	1394	- 3959	F - G	1394	- 3959
D - E	1469	- 4101	G - H	1429	- 4023

Maximum Bot Chord Forces Per Ply (lbs)

Chords	Tens.	Comp.	Chords	Tens.	Comp.
B - M	3471	- 1228	K - J	3524	- 1238
M - L	3524	- 1238	J - H	3471	- 1228
L - K	3524	- 1238			

Maximum Web Forces Per Ply (lbs)

Webs	Tens.	Comp.	Webs	Tens.	Comp.
D - M	704	- 170	K - F	779	- 312
D - K	779	- 312	F - J	704	- 170

Lumber

Top chord: 2x4 SP SS Dense; T2 2x4 SP #1;
Bot chord: 2x4 SP SS Dense;
Webs: 2x4 SP #3;
Lt Wedge: 2x4 SP #3;Rt Wedge: 2x4 SP #3;

Wind

Wind loads and reactions based on MWFRS.

Special Loads

------(Lumber Dur.Fac.=1.25 / Plate Dur.Fac.=1.25)

TC: From	56 plf at	-2.13 to	56 plf at	8.00
TC: From	28 plf at	8.00 to	28 plf at	17.33
TC: From	56 plf at	17.33 to	56 plf at	27.46
BC: From	4 plf at	-2.13 to	4 plf at	0.00
BC: From	20 plf at	0.00 to	20 plf at	8.03
BC: From	10 plf at	8.03 to	10 plf at	17.30
BC: From	20 plf at	17.30 to	20 plf at	25.33
BC: From	4 plf at	25.33 to	4 plf at	27.46

TC: 217 lb Conc. Load at 8.03,17.30
TC: 94 lb Conc. Load at 10.06,12.06,13.27,15.27
BC: 619 lb Conc. Load at 8.03,17.30
BC: 194 lb Conc. Load at 10.06,12.06,13.27,15.27

Plating Notes

Plates sized for a minimum of 3.50 sq.in./piece.

Purlins

In lieu of structural panels or rigid ceiling use purlins to laterally brace chords as follows:

Chord	Spacing(in oc)	Start(ft)	End(ft)
TC	29	-2.07	8.00
TC	24	8.00	17.33
TC	29	17.33	27.40
BC	70	0.17	25.16

Apply purlins to any chords above or below fillers at 24" OC unless shown otherwise above.

DOUGLAS FLEMING
LICENSE
No. 66648
STATE OF
FLORIDA
PROFESSIONAL ENGINEER

COA #0 278

09/15/2020

****WARNING**** READ AND FOLLOW ALL NOTES ON THIS DRAWING!
****IMPORTANT**** FURNISH THIS DRAWING TO ALL CONTRACTORS INCLUDING THE INSTALLERS

Trusses require extreme care in fabricating, handling, shipping, installing and bracing. Refer to and follow the latest edition of BCSI (Building Component Safety Information, by TPI and SBCA) for safety practices prior to performing these functions. Installers shall provide temporary bracing per BCSI. Unless noted otherwise, top chord shall have properly attached structural sheathing and bottom chord shall have a properly attached rigid ceiling. Locations shown for permanent lateral restraint of webs shall have bracing installed per BCSI sections B3, B7, or B10, as applicable. Apply plates to each face of truss and position as shown above and on the Joint Details, unless noted otherwise. Refer to drawings 160A-Z for standard plate positions. Refer to job's General Notes page for additional information.

Alpine, a division of ITW Building Components Group Inc. shall not be responsible for any deviation from this drawing, any failure to build the truss in conformance with ANSI/TPI 1, or for handling, shipping, installation and bracing of trusses. A seal on this drawing or cover page listing this drawing, indicates acceptance of professional engineering responsibility solely for the design shown. The suitability and use of this drawing for any structure is the responsibility of the Building Designer per ANSI/TPI 1 Sec.2.

For more information see these web sites: Alpine: www.alpineitw.com; TPI: www.tpinst.org; SBCA: www.sbcindustry.com; ICC: www.iccsafe.org

ALPINE
AN ITW COMPANY
6750 Forum Drive
Suite 305
Orlando FL, 32821

SEQN: 65931 HIP_ FROM: RNB	Ply: 1 Qty: 5	**Job Number:** b51385aa -terrell floor plan Trademark Const Group **Truss Label:** HJ11	Cust: R 857 JRef:1WYP8570001 T56 DrwNo: 259.20.0955.09213 SSB / DF 09/15/2020

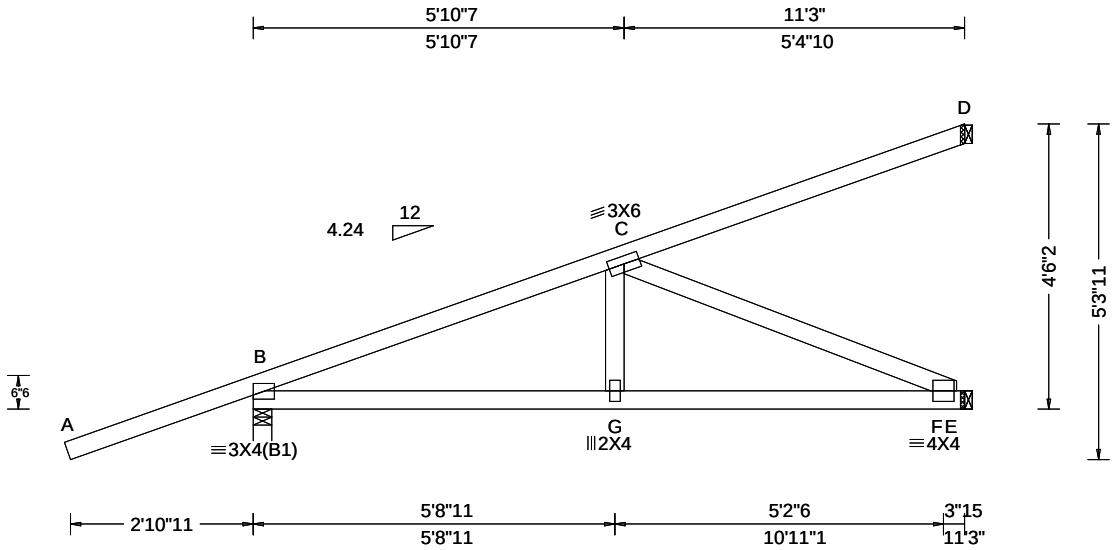

Loading Criteria (psf)

TCLL:	20.00
TCDL:	7.00
BCLL:	0.00
BCDL:	10.00
Des Ld:	37.00
NCBCLL:	10.00
Soffit:	2.00

Load Duration: 1.25
Spacing: 24.0 "

Wind Criteria
Wind Std: ASCE 7-10
Speed: 130 mph
Enclosure: Closed
Risk Category: II
EXP: B Kzt: NA
Mean Height: 15.00 ft
TCDL: 0.0 psf
BCDL: 0.0 psf
MWFRS Parallel Dist: 0 to h/2
C&C Dist a: 3.00 ft
Loc. from endwall: Any
GCpi: 0.18
Wind Duration: 1.60

Snow Criteria (Pg,Pf in PSF)
Pg: NA Ct: NA CAT: NA
Pf: NA Ce: NA
Lu: NA Cs: NA
Snow Duration: NA

Building Code:
FBC 2017 RES
TPI Std: 2014
Rep Fac: Varies by Ld Case
FT/RT:20(0)/0(0)
Plate Type(s):
WAVE

Defl/CSI Criteria

PP Deflection in	loc	L/defl	L/#
VERT(LL): 0.036	G	999	360
VERT(CL): 0.068	G	999	240
HORZ(LL): -0.010	D	-	-
HORZ(TL): 0.019	D	-	-

Creep Factor: 2.0
Max TC CSI: 0.992
Max BC CSI: 0.711
Max Web CSI: 0.581

VIEW Ver: 18.02.01A.0205.19

▲Maximum Reactions (lbs)

	Gravity			Non-Gravity		
Loc	R+	/ R-	/ Rh	/ Rw	/ U	/ RL
B	436	/-	/-	/-	/165	/-
E	425	/-	/-	/-	/118	/-
D	124	/-	/-	/-	/54	/-

Wind reactions based on MWFRS
B Brg Width = 3.5 Min Req = 1.5
E Brg Width = 1.5 Min Req = -
D Brg Width = 1.5 Min Req = -
Bearing B Fcperp = 425psi.
Members not listed have forces less than 375#

Maximum Top Chord Forces Per Ply (lbs)

Chords	Tens.	Comp.
B - C	288	- 846

Maximum Bot Chord Forces Per Ply (lbs)

Chords	Tens.	Comp.	Chords	Tens.	Comp.
B - G	792	- 265	G - F	779	- 265

Maximum Web Forces Per Ply (lbs)

Webs	Tens.	Comp.
C - F	289	- 848

Lumber
Top chord: 2x4 SP #1;
Bot chord: 2x4 SP #1;
Webs: 2x4 SP #3;

Special Loads
------(Lumber Dur.Fac.=1.25 / Plate Dur.Fac.=1.25)

TC: From	0 plf at	-2.99 to	55 plf at	-0.10	
TC: From	2 plf at	-0.10 to	2 plf at	11.25	
BC: From	0 plf at	-2.99 to	4 plf at	-0.10	
BC: From	2 plf at	0.00 to	2 plf at	11.25	

TC: -8 lb Conc. Load at 2.79
TC: 156 lb Conc. Load at 5.62
TC: 278 lb Conc. Load at 8.45
BC: 63 lb Conc. Load at 2.79
BC: 143 lb Conc. Load at 5.62
BC: 221 lb Conc. Load at 8.45

Plating Notes
Plates sized for a minimum of 3.50 sq.in./piece.

Purlins
In lieu of structural panels or rigid ceiling use purlins to laterally brace chords as follows:

Chord	Spacing(in oc)	Start(ft)	End(ft)
TC	73	-2.94	11.25
BC	120	0.19	11.25

Apply purlins to any chords above or below fillers at 24" OC unless shown otherwise above.

Wind
Wind loads and reactions based on MWFRS.

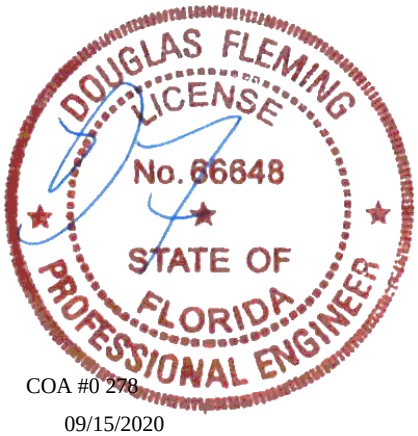

COA #0 278

09/15/2020

****WARNING**** READ AND FOLLOW ALL NOTES ON THIS DRAWING!
****IMPORTANT**** FURNISH THIS DRAWING TO ALL CONTRACTORS INCLUDING THE INSTALLERS

Trusses require extreme care in fabricating, handling, shipping, installing and bracing. Refer to and follow the latest edition of BCSI (Building Component Safety Information, by TPI and SBCA) for safety practices prior to performing these functions. Installers shall provide temporary bracing per BCSI. Unless noted otherwise, top chord shall have properly attached structural sheathing and bottom chord shall have a properly attached rigid ceiling. Locations shown for permanent lateral restraint of webs shall have bracing installed per BCSI sections B3, B7, or B10, as applicable. Apply plates to each face of truss and position as shown above and on the Joint Details, unless noted otherwise. Refer to drawings 160A-Z for standard plate positions. Refer to job's General Notes page for additional information.

Alpine, a division of ITW Building Components Group Inc. shall not be responsible for any deviation from this drawing, any failure to build the truss in conformance with ANSI/TPI 1, or for handling, shipping, installation and bracing of trusses. A seal on this drawing or cover page listing this drawing, indicates acceptance of professional engineering responsibility solely for the design shown. The suitability and use of this drawing for any structure is the responsibility of the Building Designer per ANSI/TPI 1 Sec.2.

For more information see these web sites: Alpine: www.alpineitw.com; TPI: www.tpinst.org; SBCA: www.sbcindustry.com; ICC: www.iccsafe.org

ALPINE AN ITW COMPANY
6750 Forum Drive
Suite 305
Orlando FL, 32821

SEQN: 65965 HIP_ FROM: RNB	Ply: 1 Qty: 1	**Job Number:** b51385aa -terrell floor plan Trademark Const Group **Truss Label:** HJ11A	Cust: R 857 JRef:1WYP8570001 T37 DrwNo: 259.20.0956.06200 SSB / DF 09/15/2020

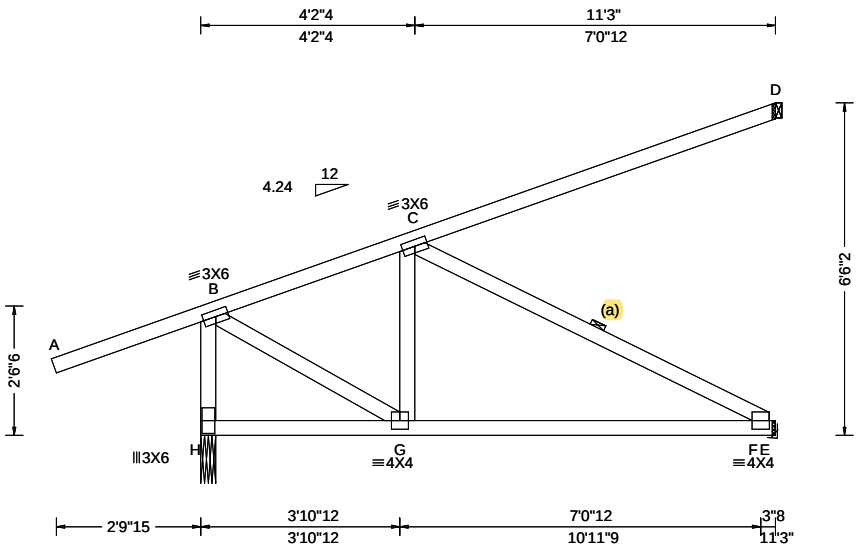

Loading Criteria (psf)

TCLL: 20.00
TCDL: 7.00
BCLL: 0.00
BCDL: 10.00
Des Ld: 37.00
NCBCLL: 10.00
Soffit: 2.00
Load Duration: 1.25
Spacing: 24.0 "

Wind Criteria

Wind Std: ASCE 7-10
Speed: 130 mph
Enclosure: Closed
Risk Category: II
EXP: B Kzt: NA
Mean Height: 15.00 ft
TCDL: 0.0 psf
BCDL: 0.0 psf
MWFRS Parallel Dist: 0 to h/2
C&C Dist a: 3.00 ft
Loc. from endwall: Any
GCpi: 0.18
Wind Duration: 1.60

Snow Criteria (Pg,Pf in PSF)

Pg: NA Ct: NA CAT: NA
Pf: NA Ce: NA
Lu: NA Cs: NA
Snow Duration: NA

Building Code:
FBC 2017 RES
TPI Std: 2014
Rep Fac: Varies by Ld Case
FT/RT:20(0)/0(0)
Plate Type(s):
WAVE

Defl/CSI Criteria

PP Deflection in	loc	L/defl	L/#
VERT(LL): 0.019	G	999	360
VERT(CL): 0.036	G	999	240
HORZ(LL): 0.010	C	-	-
HORZ(TL): 0.018	C	-	-

Creep Factor: 2.0
Max TC CSI: 0.995
Max BC CSI: 0.833
Max Web CSI: 0.683

VIEW Ver: 18.02.01A.0205.19

▲Maximum Reactions (lbs)

	Gravity			Non-Gravity		
Loc	R+	/ R-	/ Rh	/ Rw	/ U	/ RL
H	706	/-	/-	/-	/235	/42
E	626	/-	/-	/-	/183	/-
D	153	/-	/-	/-	/44	/-

Wind reactions based on MWFRS
H Brg Width = 3.5 Min Req = 1.5
E Brg Width = 1.5 Min Req = -
D Brg Width = 1.5 Min Req = -
Bearing H Fcperp = 425psi.
Members not listed have forces less than 375#

Maximum Top Chord Forces Per Ply (lbs)

Chords	Tens.	Comp.
B - C	270	- 823

Maximum Bot Chord Forces Per Ply (lbs)

Chords	Tens.	Comp.
G - F	764	- 248

Maximum Web Forces Per Ply (lbs)

Webs	Tens.	Comp.	Webs	Tens.	Comp.
H - B	268	- 803	C - F	281	- 864
B - G	841	- 235			

Lumber

Top chord: 2x4 SP #1;
Bot chord: 2x4 SP SS Dense;
Webs: 2x4 SP #3;

Bracing

(a) Continuous lateral restraint equally spaced on member. Or 1x4 #3SRB SPF-S or better "T" reinforcement. 80% length of web member. Attached with 8d Box or Gun (0.113"x2.5",min.)nails @ 6" oc.

Special Loads

------(Lumber Dur.Fac.=1.25 / Plate Dur.Fac.=1.25)

TC: From	0 plf at	-2.93 to	55 plf at	-0.10	
TC: From	2 plf at	-0.10 to	2 plf at	11.25	
BC: From	0 plf at	-2.93 to	4 plf at	-0.10	
BC: From	2 plf at	0.00 to	2 plf at	11.25	

TC: 133 lb Conc. Load at 2.79
TC: 172 lb Conc. Load at 5.62
TC: 257 lb Conc. Load at 8.45
BC: 150 lb Conc. Load at 2.79
BC: 273 lb Conc. Load at 5.62
BC: 372 lb Conc. Load at 8.45

Plating Notes

Plates sized for a minimum of 3.50 sq.in./piece.

Wind

Wind loads and reactions based on MWFRS.

Left end vertical exposed to wind pressure. Deflection meets L/180.

Purlins

In lieu of structural panels or rigid ceiling use purlins to laterally brace chords as follows:

Chord	Spacing(in oc)	Start(ft)	End(ft)
TC	64	-2.88	11.25
BC	103	0.00	11.25

Apply purlins to any chords above or below fillers at 24" OC unless shown otherwise above.

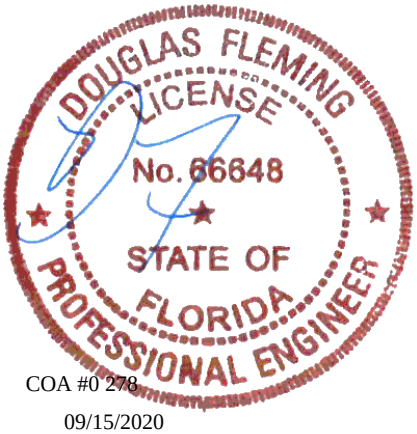

COA #0 278

09/15/2020

****WARNING**** READ AND FOLLOW ALL NOTES ON THIS DRAWING!
****IMPORTANT**** FURNISH THIS DRAWING TO ALL CONTRACTORS INCLUDING THE INSTALLERS

Trusses require extreme care in fabricating, handling, shipping, installing and bracing. Refer to and follow the latest edition of BCSI (Building Component Safety Information, by TPI and SBCA) for safety practices prior to performing these functions. Installers shall provide temporary bracing per BCSI. Unless noted otherwise, top chord shall have properly attached structural sheathing and bottom chord shall have a properly attached rigid ceiling. Locations shown for permanent lateral restraint of webs shall have bracing installed per BCSI sections B3, B7, or B10, as applicable. Apply plates to each face of truss and position as shown above and on the Joint Details, unless noted otherwise. Refer to drawings 160A-Z for standard plate positions. Refer to job's General Notes page for additional information.

Alpine, a division of ITW Building Components Group Inc. shall not be responsible for any deviation from this drawing, any failure to build the truss in conformance with ANSI/TPI 1, or for handling, shipping, installation and bracing of trusses. A seal on this drawing or cover page listing this drawing, indicates acceptance of professional engineering responsibility solely for the design shown. The suitability and use of this drawing for any structure is the responsibility of the Building Designer per ANSI/TPI 1 Sec.2.

For more information see these web sites: Alpine: www.alpineitw.com; TPI: www.tpinst.org; SBCA: www.sbcindustry.com; ICC: www.iccsafe.org

ALPINE AN ITW COMPANY
6750 Forum Drive
Suite 305
Orlando FL, 32821

SEQN: 65933 HIP_ FROM: RNB	Ply: 1 Qty: 1	**Job Number:** b51385aa -terrell floor plan Trademark Const Group **Truss Label:** HJ3	Cust: R 857 JRef:1WYP8570001 T87 DrwNo: 259.20.0956.53520 SSB / DF 09/15/2020

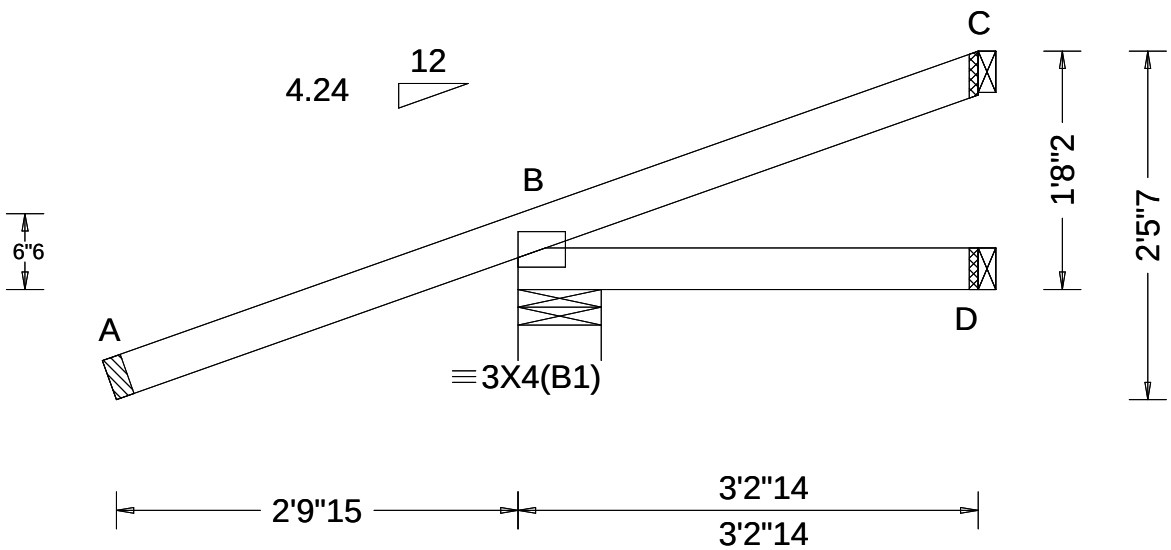

Loading Criteria (psf)
TCLL: 20.00
TCDL: 7.00
BCLL: 0.00
BCDL: 10.00
Des Ld: 37.00
NCBCLL: 10.00
Soffit: 2.00
Load Duration: 1.25
Spacing: 24.0 "

Wind Criteria
Wind Std: ASCE 7-10
Speed: 130 mph
Enclosure: Closed
Risk Category: II
EXP: B Kzt: NA
Mean Height: 15.00 ft
TCDL: 0.0 psf
BCDL: 0.0 psf
MWFRS Parallel Dist: 0 to h/2
C&C Dist a: 3.00 ft
Loc. from endwall: Any
GCpi: 0.18
Wind Duration: 1.60

Snow Criteria (Pg,Pf in PSF)
Pg: NA Ct: NA CAT: NA
Pf: NA Ce: NA
Lu: NA Cs: NA
Snow Duration: NA

Building Code:
FBC 2017 RES
TPI Std: 2014
Rep Fac: Yes
FT/RT:20(0)/0(0)
Plate Type(s):
WAVE

Defl/CSI Criteria
PP Deflection in loc L/defl L/#
VERT(LL): NA
VERT(CL): NA
HORZ(LL): 0.003 D - -
HORZ(TL): 0.005 D - -
Creep Factor: 2.0
Max TC CSI: 0.751
Max BC CSI: 0.135
Max Web CSI: 0.000

VIEW Ver: 18.02.01A.0205.19

▲Maximum Reactions (lbs)

	Gravity			Non-Gravity		
Loc	R+	/ R-	/ Rh	/ Rw	/ U	/ RL
B	378	/-	/-	/225	/137	/47
D	53	/-	/-	/27	/9	/-
C	22	/-	/-	/22	/25	/-

Wind reactions based on MWFRS
B Brg Width = 7.0 Min Req = 1.5
D Brg Width = 1.5 Min Req = -
C Brg Width = 1.5 Min Req = -
Bearing B Fcperp = 425psi.
Members not listed have forces less than 375#

Lumber
Top chord: 2x4 SP #1;
Bot chord: 2x4 SP #1;

Plating Notes
Plates sized for a minimum of 3.50 sq.in./piece.

Purlins
In lieu of structural panels or rigid ceiling use purlins to laterally brace chords as follows:

Chord	Spacing(in oc)	Start(ft)	End(ft)
TC	75	-2.88	3.24
BC	37	0.19	3.24

Apply purlins to any chords above or below fillers at 24" OC unless shown otherwise above.

Wind
Wind loads based on MWFRS with additional C&C member design.

DOUGLAS FLEMING
LICENSE
No. 66648
STATE OF
FLORIDA
PROFESSIONAL ENGINEER

COA #0 278

09/15/2020

****WARNING**** READ AND FOLLOW ALL NOTES ON THIS DRAWING!
****IMPORTANT**** FURNISH THIS DRAWING TO ALL CONTRACTORS INCLUDING THE INSTALLERS

Trusses require extreme care in fabricating, handling, shipping, installing and bracing. Refer to and follow the latest edition of BCSI (Building Component Safety Information, by TPI and SBCA) for safety practices prior to performing these functions. Installers shall provide temporary bracing per BCSI. Unless noted otherwise, top chord shall have properly attached structural sheathing and bottom chord shall have a properly attached rigid ceiling. Locations shown for permanent lateral restraint of webs shall have bracing installed per BCSI sections B3, B7, or B10, as applicable. Apply plates to each face of truss and position as shown above and on the Joint Details, unless noted otherwise. Refer to drawings 160A-Z for standard plate positions. Refer to job's General Notes page for additional information.

Alpine, a division of ITW Building Components Group Inc. shall not be responsible for any deviation from this drawing, any failure to build the truss in conformance with ANSI/TPI 1, or for handling, shipping, installation and bracing of trusses. A seal on this drawing or cover page listing this drawing, indicates acceptance of professional engineering responsibility solely for the design shown. The suitability and use of this drawing for any structure is the responsibility of the Building Designer per ANSI/TPI 1 Sec.2.

For more information see these web sites: Alpine: www.alpineitw.com; TPI: www.tpinst.org; SBCA: www.sbcindustry.com; ICC: www.iccsafe.org

ALPINE AN ITW COMPANY
6750 Forum Drive
Suite 305
Orlando FL, 32821

SEQN: 65934 HIP_ FROM: RNB	Ply: 1 Qty: 1	**Job Number:** b51385aa -terrell floor plan Trademark Const Group **Truss Label:** HJ6	Cust: R 857 JRef:1WYP8570001 T61 DrwNo: 259.20.0956.56127 SSB / DF 09/15/2020

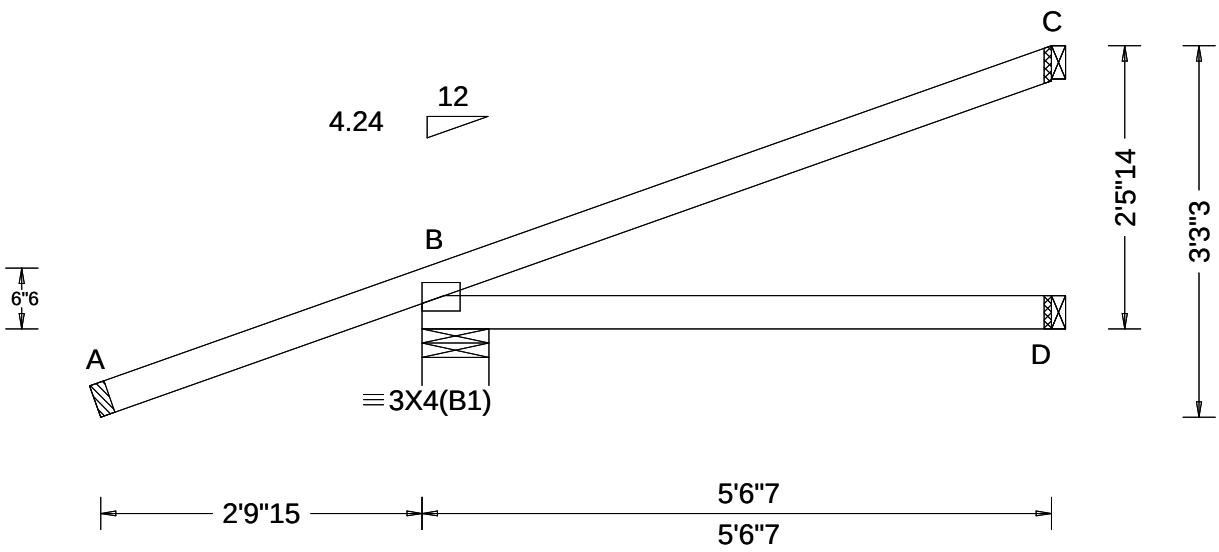

Loading Criteria (psf)

TCLL: 20.00
TCDL: 7.00
BCLL: 0.00
BCDL: 10.00
Des Ld: 37.00
NCBCLL: 10.00
Soffit: 2.00
Load Duration: 1.25
Spacing: 24.0 "

Wind Criteria

Wind Std: ASCE 7-10
Speed: 130 mph
Enclosure: Closed
Risk Category: II
EXP: B Kzt: NA
Mean Height: 15.00 ft
TCDL: 0.0 psf
BCDL: 0.0 psf
MWFRS Parallel Dist: 0 to h/2
C&C Dist a: 3.00 ft
Loc. from endwall: Any
GCpi: 0.18
Wind Duration: 1.60

Snow Criteria (Pg,Pf in PSF)

Pg: NA Ct: NA CAT: NA
Pf: NA Ce: NA
Lu: NA Cs: NA
Snow Duration: NA

Building Code:
FBC 2017 RES
TPI Std: 2014
Rep Fac: Varies by Ld Case
FT/RT:20(0)/0(0)
Plate Type(s):
WAVE

Defl/CSI Criteria

PP Deflection in loc L/defl L/#
VERT(LL): NA
VERT(CL): NA
HORZ(LL): -0.001 D - -
HORZ(TL): 0.004 D - -
Creep Factor: 2.0
Max TC CSI: 0.186
Max BC CSI: 0.221
Max Web CSI: 0.000

VIEW Ver: 18.02.01A.0205.19

▲Maximum Reactions (lbs)

	Gravity			Non-Gravity		
Loc	R+	/ R-	/ Rh	/ Rw	/ U	/ RL
B	225	/-	/-	/-	/68	/-
D	99	/-	/-	/-	/6	/-
C	35	/-7	/-	/-	/12	/-

Wind reactions based on MWFRS
B Brg Width = 7.0 Min Req = 1.5
D Brg Width = 1.5 Min Req = -
C Brg Width = 1.5 Min Req = -
Bearing B Fcperp = 425psi.
Members not listed have forces less than 375#

Lumber

Top chord: 2x4 SP #1;
Bot chord: 2x4 SP #1;

Special Loads

------(Lumber Dur.Fac.=1.25 / Plate Dur.Fac.=1.25)

TC: From	0 plf at	-2.93 to	55 plf at	-0.10
TC: From	2 plf at	-0.10 to	2 plf at	5.54
BC: From	0 plf at	-2.93 to	4 plf at	-0.10
BC: From	2 plf at	0.00 to	2 plf at	5.54

TC: -10 lb Conc. Load at 2.70
BC: 61 lb Conc. Load at 2.70

Plating Notes

Plates sized for a minimum of 3.50 sq.in./piece.

Purlins

In lieu of structural panels or rigid ceiling use purlins to laterally brace chords as follows:

Chord	Spacing(in oc)	Start(ft)	End(ft)
TC	75	-2.88	5.54
BC	64	0.19	5.54

Apply purlins to any chords above or below fillers at 24" OC unless shown otherwise above.

Wind

Wind loads and reactions based on MWFRS.

DOUGLAS FLEMING
LICENSE
No. 66648
STATE OF
FLORIDA
PROFESSIONAL ENGINEER

COA #0 278

09/15/2020

****WARNING**** READ AND FOLLOW ALL NOTES ON THIS DRAWING!
****IMPORTANT**** FURNISH THIS DRAWING TO ALL CONTRACTORS INCLUDING THE INSTALLERS

Trusses require extreme care in fabricating, handling, shipping, installing and bracing. Refer to and follow the latest edition of BCSI (Building Component Safety Information, by TPI and SBCA) for safety practices prior to performing these functions. Installers shall provide temporary bracing per BCSI. Unless noted otherwise, top chord shall have properly attached structural sheathing and bottom chord shall have a properly attached rigid ceiling. Locations shown for permanent lateral restraint of webs shall have bracing installed per BCSI sections B3, B7, or B10, as applicable. Apply plates to each face of truss and position as shown above and on the Joint Details, unless noted otherwise. Refer to drawings 160A-Z for standard plate positions. Refer to job's General Notes page for additional information.

Alpine, a division of ITW Building Components Group Inc. shall not be responsible for any deviation from this drawing, any failure to build the truss in conformance with ANSI/TPI 1, or for handling, shipping, installation and bracing of trusses. A seal on this drawing or cover page listing this drawing, indicates acceptance of professional engineering responsibility solely for the design shown. The suitability and use of this drawing for any structure is the responsibility of the Building Designer per ANSI/TPI 1 Sec.2.

For more information see these web sites: Alpine: www.alpineitw.com; TPI: www.tpinst.org; SBCA: www.sbcindustry.com; ICC: www.iccsafe.org

ALPINE
AN ITW COMPANY
6750 Forum Drive
Suite 305
Orlando FL, 32821

SEQN: 65935 HIP_ FROM: RNB	Ply: 1 Qty: 2	**Job Number:** b51385aa -terrell floor plan Trademark Const Group **Truss Label:** HJ6A	Cust: R 857 JRef:1WYP8570001 T81 DrwNo: 259.20.0956.57487 SSB / DF 09/15/2020

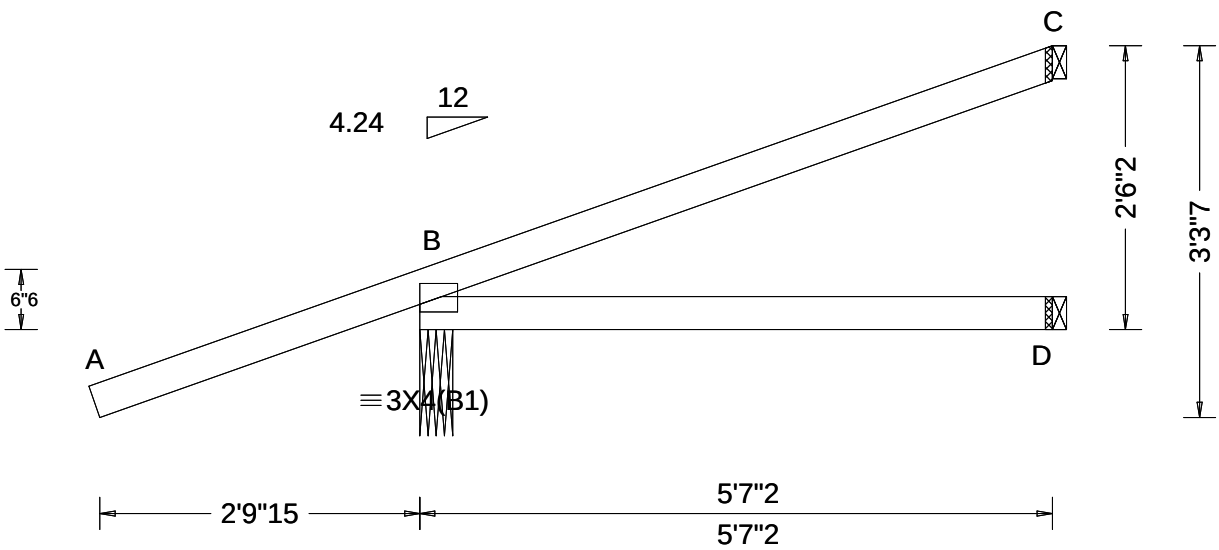

Loading Criteria (psf)
TCLL: 20.00
TCDL: 7.00
BCLL: 0.00
BCDL: 10.00
Des Ld: 37.00
NCBCLL: 10.00
Soffit: 2.00
Load Duration: 1.25
Spacing: 24.0 "

Wind Criteria
Wind Std: ASCE 7-10
Speed: 130 mph
Enclosure: Closed
Risk Category: II
EXP: B Kzt: NA
Mean Height: 15.10 ft
TCDL: 0.0 psf
BCDL: 0.0 psf
MWFRS Parallel Dist: 0 to h/2
C&C Dist a: 3.00 ft
Loc. from endwall: Any
GCpi: 0.18
Wind Duration: 1.60

Snow Criteria (Pg,Pf in PSF)
Pg: NA Ct: NA CAT: NA
Pf: NA Ce: NA
Lu: NA Cs: NA
Snow Duration: NA

Building Code:
FBC 2017 RES
TPI Std: 2014
Rep Fac: Varies by Ld Case
FT/RT:20(0)/0(0)
Plate Type(s):
WAVE

Defl/CSI Criteria
PP Deflection in loc L/defl L/#
VERT(LL): NA
VERT(CL): NA
HORZ(LL): -0.001 D - -
HORZ(TL): 0.004 D - -
Creep Factor: 2.0
Max TC CSI: 0.186
Max BC CSI: 0.226
Max Web CSI: 0.000

VIEW Ver: 18.02.01A.0205.19

▲Maximum Reactions (lbs)

	Gravity			Non-Gravity		
Loc	R+	/ R-	/ Rh	/ Rw	/ U	/ RL
B	226	/-	/-	/-	/67	/-
D	100	/-	/-	/-	/6	/-
C	36	/-6	/-	/-	/12	/-

Wind reactions based on MWFRS
B Brg Width = 3.5 Min Req = 1.5
D Brg Width = 1.5 Min Req = -
C Brg Width = 1.5 Min Req = -
Bearing B Fcperp = 425psi.
Members not listed have forces less than 375#

Lumber
Top chord: 2x4 SP #1;
Bot chord: 2x4 SP #1;

Special Loads
------(Lumber Dur.Fac.=1.25 / Plate Dur.Fac.=1.25)

TC: From	0 plf at	-2.93 to	55 plf at	-0.10
TC: From	2 plf at	-0.10 to	2 plf at	5.59
BC: From	0 plf at	-2.93 to	4 plf at	-0.10
BC: From	2 plf at	0.00 to	2 plf at	5.59

TC: -8 lb Conc. Load at 2.79
BC: 63 lb Conc. Load at 2.79

Plating Notes
Plates sized for a minimum of 3.50 sq.in./piece.

Purlins
In lieu of structural panels or rigid ceiling use purlins to laterally brace chords as follows:

Chord	Spacing(in oc)	Start(ft)	End(ft)
TC	75	-2.88	5.59
BC	65	0.19	5.59

Apply purlins to any chords above or below fillers at 24" OC unless shown otherwise above.

Wind
Wind loads and reactions based on MWFRS.

DOUGLAS FLEMING
LICENSE
No. 66648
STATE OF
FLORIDA
PROFESSIONAL ENGINEER

COA #0 278

09/15/2020

****WARNING**** READ AND FOLLOW ALL NOTES ON THIS DRAWING!
****IMPORTANT**** FURNISH THIS DRAWING TO ALL CONTRACTORS INCLUDING THE INSTALLERS

Trusses require extreme care in fabricating, handling, shipping, installing and bracing. Refer to and follow the latest edition of BCSI (Building Component Safety Information, by TPI and SBCA) for safety practices prior to performing these functions. Installers shall provide temporary bracing per BCSI. Unless noted otherwise, top chord shall have properly attached structural sheathing and bottom chord shall have a properly attached rigid ceiling. Locations shown for permanent lateral restraint of webs shall have bracing installed per BCSI sections B3, B7, or B10, as applicable. Apply plates to each face of truss and position as shown above and on the Joint Details, unless noted otherwise. Refer to drawings 160A-Z for standard plate positions. Refer to job's General Notes page for additional information.

Alpine, a division of ITW Building Components Group Inc. shall not be responsible for any deviation from this drawing, any failure to build the truss in conformance with ANSI/TPI 1, or for handling, shipping, installation and bracing of trusses. A seal on this drawing or cover page listing this drawing, indicates acceptance of professional engineering responsibility solely for the design shown. The suitability and use of this drawing for any structure is the responsibility of the Building Designer per ANSI/TPI 1 Sec.2.

For more information see these web sites: Alpine: www.alpineitw.com; TPI: www.tpinst.org; SBCA: www.sbcindustry.com; ICC: www.iccsafe.org

ALPINE AN ITW COMPANY
6750 Forum Drive
Suite 305
Orlando FL, 32821

SEQN: 65885 HIPM	Ply: 1	**Job Number:** b51385aa	Cust: R 857 JRef:1WYP8570001 T45
FROM: RNB	Qty: 1	-terrell floor plan Trademark Const Group	DrwNo: 259.20.0957.32980
Page 1 of 2		**Truss Label:** MH1	SSB / DF 09/15/2020

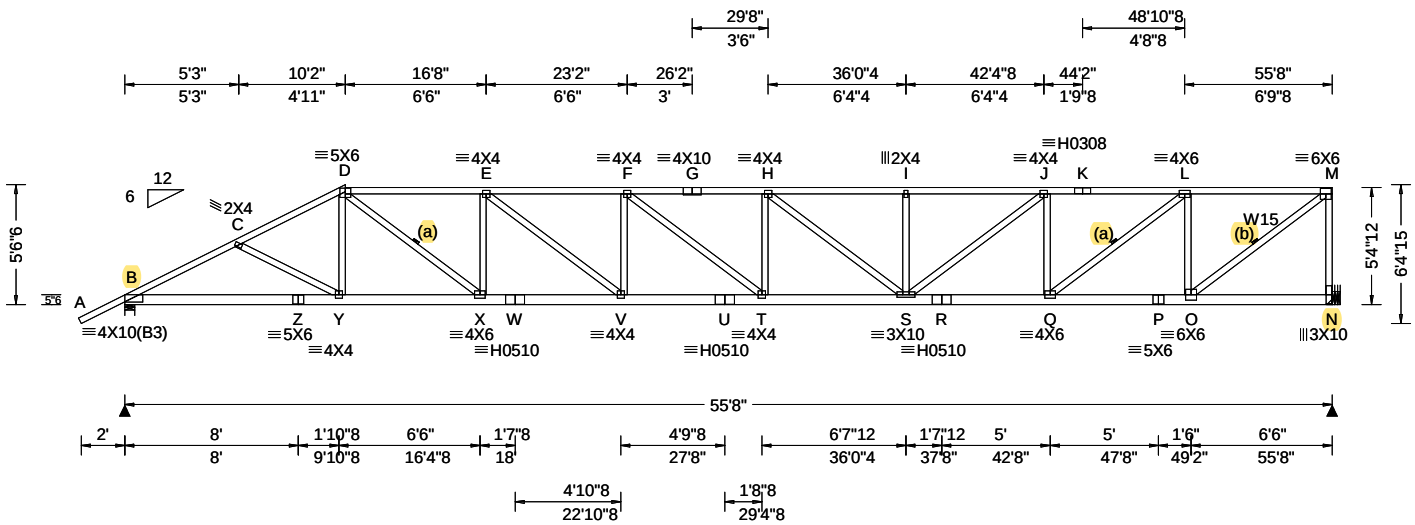

Loading Criteria (psf)

TCLL:	20.00
TCDL:	7.00
BCLL:	0.00
BCDL:	10.00
Des Ld:	37.00
NCBCLL:	10.00
Soffit:	2.00

Load Duration: 1.25
Spacing: 24.0 "

Wind Criteria
Wind Std: ASCE 7-10
Speed: 130 mph
Enclosure: Closed
Risk Category: II
EXP: B Kzt: NA
Mean Height: 15.00 ft
TCDL: 0.0 psf
BCDL: 0.0 psf
MWFRS Parallel Dist: h/2 to h
C&C Dist a: 5.57 ft
Loc. from endwall: not in 6.50 ft
GCpi: 0.18
Wind Duration: 1.60

Snow Criteria (Pg,Pf in PSF)
Pg: NA Ct: NA CAT: NA
Pf: NA Ce: NA
Lu: NA Cs: NA
Snow Duration: NA

Building Code:
FBC 2017 RES
TPI Std: 2014
Rep Fac: Yes
FT/RT:20(0)/0(0)
Plate Type(s):
WAVE, HS

Defl/CSI Criteria

PP Deflection in	loc	L/defl	L/#
VERT(LL): 0.596	T	999	360
VERT(CL): 1.118	T	595	240
HORZ(LL): 0.127	D	-	-
HORZ(TL): 0.239	D	-	-

Creep Factor: 2.0
Max TC CSI: 0.975
Max BC CSI: 0.998
Max Web CSI: 0.996

VIEW Ver: 18.02.01A.0205.19

▲ Maximum Reactions (lbs)

	Gravity			Non-Gravity		
Loc	R+	/ R-	/ Rh	/ Rw	/ U	/ RL
B	2238	/-	/-	/1157	/708	/161
N	2097	/-	/-	/975	/666	/-

Wind reactions based on MWFRS
B Brg Width = 5.5 Min Req = 2.8
N Brg Width = - Min Req = -
Bearing B Fcperp = 425psi.
Members not listed have forces less than 375#

Maximum Top Chord Forces Per Ply (lbs)

Chords	Tens.	Comp.	Chords	Tens.	Comp.
B - C	1848	- 4059	H - I	2456	- 5335
C - D	1742	- 3847	I - J	2456	- 5335
D - E	2243	- 4818	J - K	1946	- 4188
E - F	2591	- 5627	K - L	1946	- 4188
F - G	2668	- 5807	L - M	1174	- 2447
G - H	2668	- 5807			

Maximum Bot Chord Forces Per Ply (lbs)

Chords	Tens.	Comp.	Chords	Tens.	Comp.
B - Z	3565	- 1906	U - T	5655	- 2690
Z - Y	3565	- 1906	T - S	5806	- 2733
Y - X	3401	- 1735	S - R	4257	- 2003
X - W	4876	- 2371	R - Q	4257	- 2003
W - V	4876	- 2371	Q - P	2549	- 1231
V - U	5655	- 2690	P - O	2549	- 1231

Maximum Web Forces Per Ply (lbs)

Webs	Tens.	Comp.	Webs	Tens.	Comp.
D - X	1829	- 838	J - Q	595	- 1196
X - E	518	- 1023	Q - L	2108	- 948
E - V	966	- 410	L - O	870	- 1749
V - F	263	- 484	O - M	3092	- 1419
H - S	297	- 601	M - N	975	- 2041
S - J	1373	- 634			

Lumber

Top chord: 2x4 SP #1;
Bot chord: 2x6 SP #1;
Webs: 2x4 SP #3; W15 2x4 SP #1;

Bracing

(a) Continuous lateral restraint equally spaced on member. Or 1x4 #3SRB SPF-S or better "T" reinforcement. 80% length of web member. Attached with 8d Box or Gun (0.113"x2.5",min.)nails @ 6" oc.

(b) Continuous lateral restraint equally spaced on member. Or 2x4 #3 or better "T" reinforcement. 80% length of web member. Attached with 10d Box or Gun (0.128"x3",min.)nails @ 6" oc.

Plating Notes

Plates sized for a minimum of 3.50 sq.in./piece.

Purlins

In lieu of structural panels or rigid ceiling use purlins to laterally brace chords as follows:

Chord	Spacing(in oc)	Start(ft)	End(ft)
TC	33	-2.07	10.17
TC	24	10.17	55.67
BC	71	0.15	55.67

Apply purlins to any chords above or below fillers at 24" OC unless shown otherwise above.

Wind

Wind loads based on MWFRS with additional C&C member design.

Right end vertical exposed to wind pressure.
Deflection meets L/180.

Additional Notes

WARNING: Furnish a copy of this DWG to the installation contractor. Special care must be taken during handling, shipping and installation of trusses. See "WARNING" note below.

DOUGLAS FLEMING
LICENSE
No. 66648
STATE OF
FLORIDA
PROFESSIONAL ENGINEER

COA #0 278

09/15/2020

****WARNING**** READ AND FOLLOW ALL NOTES ON THIS DRAWING!
****IMPORTANT**** FURNISH THIS DRAWING TO ALL CONTRACTORS INCLUDING THE INSTALLERS

Trusses require extreme care in fabricating, handling, shipping, installing and bracing. Refer to and follow the latest edition of BCSI (Building Component Safety Information, by TPI and SBCA) for safety practices prior to performing these functions. Installers shall provide temporary bracing per BCSI. Unless noted otherwise, top chord shall have properly attached structural sheathing and bottom chord shall have a properly attached rigid ceiling. Locations shown for permanent lateral restraint of webs shall have bracing installed per BCSI sections B3, B7, or B10, as applicable. Apply plates to each face of truss and position as shown above and on the Joint Details, unless noted otherwise. Refer to drawings 160A-Z for standard plate positions. Refer to job's General Notes page for additional information.

Alpine, a division of ITW Building Components Group Inc. shall not be responsible for any deviation from this drawing, any failure to build the truss in conformance with ANSI/TPI 1, or for handling, shipping, installation and bracing of trusses. A seal on this drawing or cover page listing this drawing, indicates acceptance of professional engineering responsibility solely for the design shown. The suitability and use of this drawing for any structure is the responsibility of the Building Designer per ANSI/TPI 1 Sec.2.

For more information see these web sites: Alpine: www.alpineitw.com; TPI: www.tpinst.org; SBCA: www.sbcindustry.com; ICC: www.iccsafe.org

ALPINE
AN ITW COMPANY
6750 Forum Drive
Suite 305
Orlando FL, 32821

Hangers / Ties

Simpson Construction Hardware is specified based on the most current information provided by Simpson Strong-Tie. Please refer to the most recent Simpson Strong-Tie catalog for additional information.

Recommended hanger connections are based on manufacturer tested capacities and calculations. Conditions may exist that require different connections than indicated. Refer to manufacturer publication for additional information.

Bearing at location x=55'5" uses the following support conditions: 55'5"
Bearing N (55'5", 10'1"2) HGUS28
Supporting Member: (3)2x8 SP SS Dense
(36) 0.148"x3" nails into supporting member,
(6) 0.148"x3" nails into supported member.

DOUGLAS FLEMING
LICENSE
No. 66648
STATE OF
FLORIDA
PROFESSIONAL ENGINEER

COA #0 278

09/15/2020

****WARNING**** READ AND FOLLOW ALL NOTES ON THIS DRAWING!
****IMPORTANT**** FURNISH THIS DRAWING TO ALL CONTRACTORS INCLUDING THE INSTALLERS

Trusses require extreme care in fabricating, handling, shipping, installing and bracing. Refer to and follow the latest edition of BCSI (Building Component Safety Information, by TPI and SBCA) for safety practices prior to performing these functions. Installers shall provide temporary bracing per BCSI. Unless noted otherwise, top chord shall have properly attached structural sheathing and bottom chord shall have a properly attached rigid ceiling. Locations shown for permanent lateral restraint of webs shall have bracing installed per BCSI sections B3, B7, or B10, as applicable. Apply plates to each face of truss and position as shown above and on the Joint Details, unless noted otherwise. Refer to drawings 160A-Z for standard plate positions. Refer to job's General Notes page for additional information.

Alpine, a division of ITW Building Components Group Inc. shall not be responsible for any deviation from this drawing, any failure to build the truss in conformance with ANSI/TPI 1, or for handling, shipping, installation and bracing of trusses. A seal on this drawing or cover page listing this drawing, indicates acceptance of professional engineering responsibility solely for the design shown. The suitability and use of this drawing for any structure is the responsibility of the Building Designer per ANSI/TPI 1 Sec.2.

For more information see these web sites: Alpine: www.alpineitw.com; TPI: www.tpinst.org; SBCA: www.sbcindustry.com; ICC: www.iccsafe.org

ALPINE AN ITW COMPANY
6750 Forum Drive
Suite 305
Orlando FL, 32821

SEQN: 65886 HIPM	Ply: 1	**Job Number:** b51385aa		Cust: R 857 JRef:1WYP8570001 T43
FROM: RNB	Qty: 1	-terrell floor plan Trademark Const Group		DrwNo: 259.20.0957.36650
Page 1 of 2		**Truss Label:** MH2		SSB / DF 09/15/2020

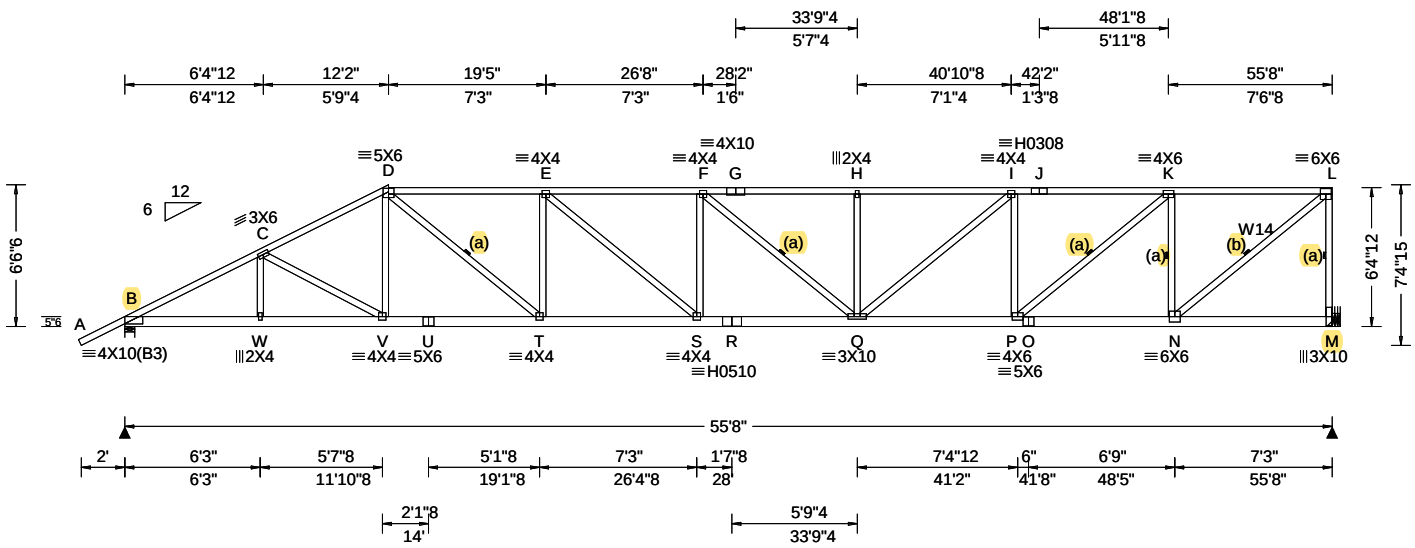

Loading Criteria (psf)

TCLL: 20.00
TCDL: 7.00
BCLL: 0.00
BCDL: 10.00
Des Ld: 37.00
NCBCLL: 10.00
Soffit: 2.00
Load Duration: 1.25
Spacing: 24.0 "

Wind Criteria

Wind Std: ASCE 7-10
Speed: 130 mph
Enclosure: Closed
Risk Category: II
EXP: B Kzt: NA
Mean Height: 15.00 ft
TCDL: 0.0 psf
BCDL: 0.0 psf
MWFRS Parallel Dist: h/2 to h
C&C Dist a: 5.57 ft
Loc. from endwall: not in 13.00 ft
GCpi: 0.18
Wind Duration: 1.60

Snow Criteria (Pg,Pf in PSF)

Pg: NA Ct: NA CAT: NA
Pf: NA Ce: NA
Lu: NA Cs: NA
Snow Duration: NA

Building Code:
FBC 2017 RES
TPI Std: 2014
Rep Fac: Yes
FT/RT:20(0)/0(0)
Plate Type(s):
WAVE, HS

Defl/CSI Criteria

PP Deflection in	loc	L/defl	L/#
VERT(LL): 0.453	F	999	360
VERT(CL): 0.849	F	784	240
HORZ(LL): 0.104	D	-	-
HORZ(TL): 0.195	D	-	-

Creep Factor: 2.0
Max TC CSI: 0.956
Max BC CSI: 0.977
Max Web CSI: 0.989

VIEW Ver: 18.02.01A.0205.19

▲Maximum Reactions (lbs)

Loc	Gravity R+	/ R-	/ Rh	Non-Gravity / Rw	/ U	/ RL
B	2238	/-	/-	/1175	/707	/192
M	2097	/-	/-	/982	/666	/-

Wind reactions based on MWFRS
B Brg Width = 5.5 Min Req = 2.8
M Brg Width = - Min Req = -
Bearing B Fcperp = 425psi.
Members not listed have forces less than 375#

Maximum Top Chord Forces Per Ply (lbs)

Chords	Tens.	Comp.	Chords	Tens.	Comp.
B - C	1767	-4020	G - H	2174	-4660
C - D	1694	-3732	H - I	2174	-4660
D - E	2057	-4380	I - J	1776	-3766
E - F	2260	-4852	J - K	1776	-3766
F - G	2174	-4660	K - L	1105	-2251

Maximum Bot Chord Forces Per Ply (lbs)

Chords	Tens.	Comp.	Chords	Tens.	Comp.
B - W	3525	-1885	S - R	4863	-2352
W - V	3526	-1886	R - Q	4863	-2352
V - U	3278	-1717	Q - P	3819	-1831
U - T	3278	-1717	P - O	2334	-1150
T - S	4419	-2186	O - N	2334	-1150

Maximum Web Forces Per Ply (lbs)

Webs	Tens.	Comp.	Webs	Tens.	Comp.
V - D	397	-122	I - P	564	-1096
D - T	1461	-658	P - K	1894	-864
T - E	440	-827	K - N	866	-1710
E - S	573	-241	N - L	2926	-1352
H - Q	239	-397	L - M	983	-2036
Q - I	1102	-524			

Lumber

Top chord: 2x4 SP #1;
Bot chord: 2x6 SP #1;
Webs: 2x4 SP #3; W14 2x4 SP #1;

Bracing

(a) Continuous lateral restraint equally spaced on member. Or 1x4 #3SRB SPF-S or better "T" reinforcement. 80% length of web member. Attached with 8d Box or Gun (0.113"x2.5",min.)nails @ 6" oc.

(b) Continuous lateral restraint equally spaced on member. Or 2x6 #3 or better "T" reinforcement. 80% length of web member. Attached with 10d Box or Gun (0.128"x3",min.)nails @ 6" oc.

Plating Notes

Plates sized for a minimum of 3.50 sq.in./piece.

Purlins

In lieu of structural panels or rigid ceiling use purlins to laterally brace chords as follows:

Chord	Spacing(in oc)	Start(ft)	End(ft)
TC	33	-2.07	12.17
TC	24	12.17	55.67
BC	77	0.15	55.67

Apply purlins to any chords above or below fillers at 24" OC unless shown otherwise above.

Wind

Wind loads based on MWFRS with additional C&C member design.

Right end vertical exposed to wind pressure.
Deflection meets L/180.

Additional Notes

WARNING: Furnish a copy of this DWG to the installation contractor. Special care must be taken during handling, shipping and installation of trusses. See "WARNING" note below.

DOUGLAS FLEMING LICENSE No. 66648 STATE OF FLORIDA PROFESSIONAL ENGINEER

COA #0 278

09/15/2020

****WARNING**** READ AND FOLLOW ALL NOTES ON THIS DRAWING!
****IMPORTANT**** FURNISH THIS DRAWING TO ALL CONTRACTORS INCLUDING THE INSTALLERS

Trusses require extreme care in fabricating, handling, shipping, installing and bracing. Refer to and follow the latest edition of BCSI (Building Component Safety Information, by TPI and SBCA) for safety practices prior to performing these functions. Installers shall provide temporary bracing per BCSI. Unless noted otherwise, top chord shall have properly attached structural sheathing and bottom chord shall have a properly attached rigid ceiling. Locations shown for permanent lateral restraint of webs shall have bracing installed per BCSI sections B3, B7, or B10, as applicable. Apply plates to each face of truss and position as shown above and on the Joint Details, unless noted otherwise. Refer to drawings 160A-Z for standard plate positions. Refer to job's General Notes page for additional information.

Alpine, a division of ITW Building Components Group Inc. shall not be responsible for any deviation from this drawing, any failure to build the truss in conformance with ANSI/TPI 1, or for handling, shipping, installation and bracing of trusses. A seal on this drawing or cover page listing this drawing, indicates acceptance of professional engineering responsibility solely for the design shown. The suitability and use of this drawing for any structure is the responsibility of the Building Designer per ANSI/TPI 1 Sec.2.

For more information see these web sites: Alpine: www.alpineitw.com; TPI: www.tpinst.org; SBCA: www.sbcindustry.com; ICC: www.iccsafe.org

ALPINE AN ITW COMPANY
6750 Forum Drive
Suite 305
Orlando FL, 32821

Hangers / Ties

Simpson Construction Hardware is specified based on the most current information provided by Simpson Strong-Tie. Please refer to the most recent Simpson Strong-Tie catalog for additional information.

Recommended hanger connections are based on manufacturer tested capacities and calculations. Conditions may exist that require different connections than indicated. Refer to manufacturer publication for additional information.

Bearing at location x=55'5" uses the following support conditions: 55'5"
Bearing M (55'5", 10'1"2) HGUS28
Supporting Member: (3)2x8 SP SS Dense
(36) 0.148"x3" nails into supporting member,
(6) 0.148"x3" nails into supported member.

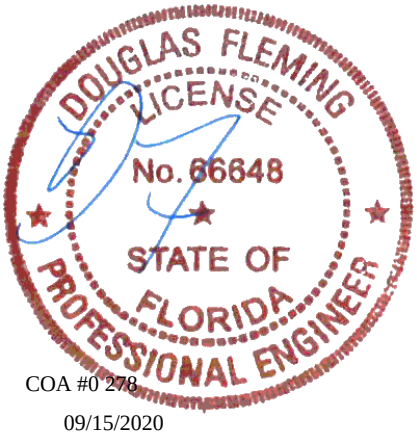

COA #0 278

09/15/2020

****WARNING**** READ AND FOLLOW ALL NOTES ON THIS DRAWING!
****IMPORTANT**** FURNISH THIS DRAWING TO ALL CONTRACTORS INCLUDING THE INSTALLERS

Trusses require extreme care in fabricating, handling, shipping, installing and bracing. Refer to and follow the latest edition of BCSI (Building Component Safety Information, by TPI and SBCA) for safety practices prior to performing these functions. Installers shall provide temporary bracing per BCSI. Unless noted otherwise, top chord shall have properly attached structural sheathing and bottom chord shall have a properly attached rigid ceiling. Locations shown for permanent lateral restraint of webs shall have bracing installed per BCSI sections B3, B7, or B10, as applicable. Apply plates to each face of truss and position as shown above and on the Joint Details, unless noted otherwise. Refer to drawings 160A-Z for standard plate positions. Refer to job's General Notes page for additional information.

Alpine, a division of ITW Building Components Group Inc. shall not be responsible for any deviation from this drawing, any failure to build the truss in conformance with ANSI/TPI 1, or for handling, shipping, installation and bracing of trusses. A seal on this drawing or cover page listing this drawing, indicates acceptance of professional engineering responsibility solely for the design shown. The suitability and use of this drawing for any structure is the responsibility of the Building Designer per ANSI/TPI 1 Sec.2.

For more information see these web sites: Alpine: www.alpineitw.com; TPI: www.tpinst.org; SBCA: www.sbcindustry.com; ICC: www.iccsafe.org

ALPINE
AN ITW COMPANY
6750 Forum Drive
Suite 305
Orlando FL, 32821

SEQN: 65887 HIPM	Ply: 1	**Job Number:** b51385aa	Cust: R 857 JRef:1WYP8570001 T50
FROM: RNB	Qty: 1	-terrell floor plan Trademark Const Group	DrwNo: 259.20.0957.53000
Page 1 of 2		**Truss Label:** MH3	SSB / DF 09/15/2020

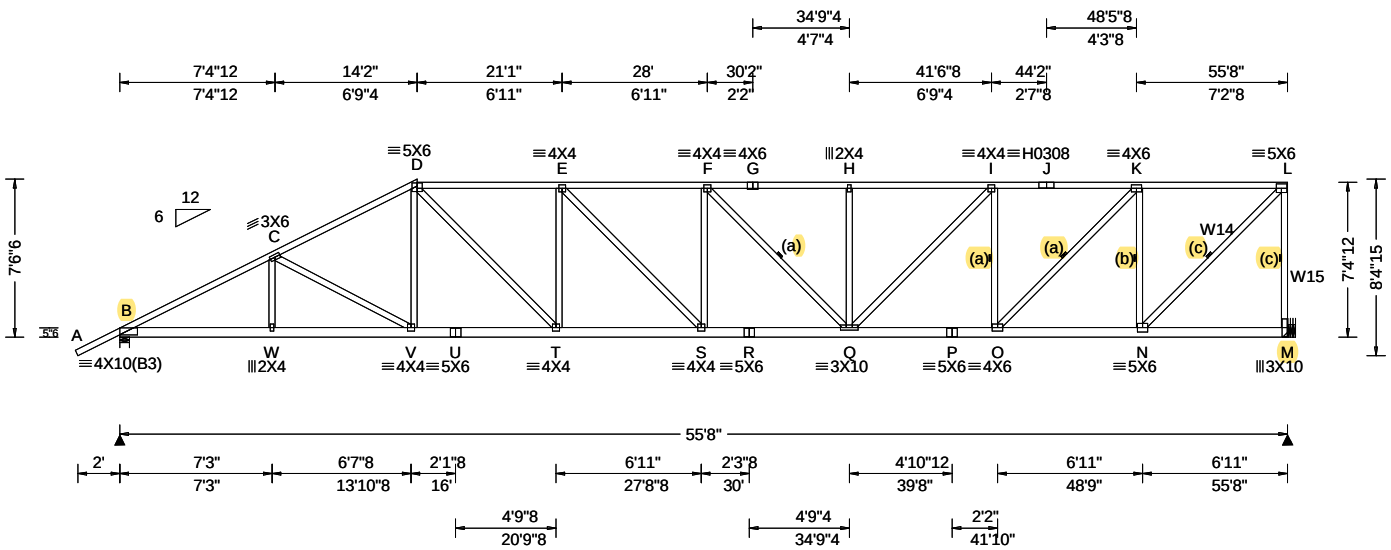

Loading Criteria (psf)

TCLL:	20.00
TCDL:	7.00
BCLL:	0.00
BCDL:	10.00
Des Ld:	37.00
NCBCLL:	10.00
Soffit:	2.00

Load Duration: 1.25
Spacing: 24.0 "

Wind Criteria
Wind Std: ASCE 7-10
Speed: 130 mph
Enclosure: Closed
Risk Category: II
EXP: B Kzt: NA
Mean Height: 15.00 ft
TCDL: 0.0 psf
BCDL: 0.0 psf
MWFRS Parallel Dist: h to 2h
C&C Dist a: 5.57 ft
Loc. from endwall: not in 13.00 ft
GCpi: 0.18
Wind Duration: 1.60

Snow Criteria (Pg,Pf in PSF)
Pg: NA Ct: NA CAT: NA
Pf: NA Ce: NA
Lu: NA Cs: NA
Snow Duration: NA

Building Code:
FBC 2017 RES
TPI Std: 2014
Rep Fac: Yes
FT/RT:20(0)/0(0)
Plate Type(s):
WAVE, HS

Defl/CSI Criteria

PP Deflection in	loc	L/defl	L/#
VERT(LL): 0.361	F	999	360
VERT(CL): 0.678	F	982	240
HORZ(LL): 0.085	D	-	-
HORZ(TL): 0.160	D	-	-

Creep Factor: 2.0
Max TC CSI: 0.994
Max BC CSI: 0.985
Max Web CSI: 0.940

VIEW Ver: 18.02.01A.0205.19

▲Maximum Reactions (lbs)

Loc	Gravity R+	/ R-	/ Rh	Non-Gravity / Rw	/ U	/ RL
B	2238	/-	/-	/1191	/602	/223
M	2097	/-	/-	/989	/666	/-

Wind reactions based on MWFRS
B Brg Width = 5.5 Min Req = 2.8
M Brg Width = - Min Req = -
Bearing B Fcperp = 425psi.
Members not listed have forces less than 375#

Maximum Top Chord Forces Per Ply (lbs)

Chords	Tens.	Comp.	Chords	Tens.	Comp.
B - C	1739	- 4020	G - H	1863	- 3926
C - D	1629	- 3591	H - I	1863	- 3926
D - E	1855	- 3897	I - J	1510	- 3130
E - F	1972	- 4172	J - K	1510	- 3130
F - G	1863	- 3926	K - L	946	- 1853

Maximum Bot Chord Forces Per Ply (lbs)

Chords	Tens.	Comp.	Chords	Tens.	Comp.
B - W	3519	- 1904	S - R	4177	- 2065
W - V	3517	- 1905	R - Q	4177	- 2065
V - U	3133	- 1674	Q - P	3178	- 1560
U - T	3133	- 1674	P - O	3178	- 1560
T - S	3924	- 1985	O - N	1925	- 979

Maximum Web Forces Per Ply (lbs)

Webs	Tens.	Comp.	Webs	Tens.	Comp.
C - V	259	- 424	I - O	589	- 1141
V - D	452	- 148	O - K	1756	- 811
D - T	1115	- 506	K - N	878	- 1727
T - E	375	- 686	N - L	2640	- 1231
H - Q	227	- 377	L - M	991	- 2040
Q - I	1077	- 520			

Lumber
Top chord: 2x4 SP #1;
Bot chord: 2x6 SP #1;
Webs: 2x4 SP #3; W14,W15 2x4 SP #1;

Bracing
(a) Continuous lateral restraint equally spaced on member. Or 1x4 #3SRB SPF-S or better "T" reinforcement. 80% length of web member. Attached with 8d Box or Gun (0.113"x2.5",min.)nails @ 6" oc.

(b) Continuous lateral restraint equally spaced on member. Or 2x4 #3 or better "T" reinforcement. 80% length of web member. Attached with 10d Box or Gun (0.128"x3",min.)nails @ 6" oc.

(c) Continuous lateral restraint equally spaced on member. Or 2x6 #3 or better "T" reinforcement. 80% length of web member. Attached with 10d Box or Gun (0.128"x3",min.)nails @ 6" oc.

Plating Notes
Plates sized for a minimum of 3.50 sq.in./piece.

Purlins
In lieu of structural panels or rigid ceiling use purlins to laterally brace chords as follows:

Chord	Spacing(in oc)	Start(ft)	End(ft)
TC	33	-2.07	14.17
TC	24	14.17	55.67
BC	83	0.15	55.67

Apply purlins to any chords above or below fillers at 24" OC unless shown otherwise above.

Wind
Wind loads based on MWFRS with additional C&C member design.

Right end vertical exposed to wind pressure. Deflection meets L/180.

Additional Notes
WARNING: Furnish a copy of this DWG to the installation contractor. Special care must be taken during handling, shipping and installation of trusses. See "WARNING" note below.

DOUGLAS FLEMING LICENSE No. 66648 STATE OF FLORIDA PROFESSIONAL ENGINEER

COA #0 278

09/15/2020

****WARNING**** READ AND FOLLOW ALL NOTES ON THIS DRAWING!
****IMPORTANT**** FURNISH THIS DRAWING TO ALL CONTRACTORS INCLUDING THE INSTALLERS

Trusses require extreme care in fabricating, handling, shipping, installing and bracing. Refer to and follow the latest edition of BCSI (Building Component Safety Information, by TPI and SBCA) for safety practices prior to performing these functions. Installers shall provide temporary bracing per BCSI. Unless noted otherwise, top chord shall have properly attached structural sheathing and bottom chord shall have a properly attached rigid ceiling. Locations shown for permanent lateral restraint of webs shall have bracing installed per BCSI sections B3, B7, or B10, as applicable. Apply plates to each face of truss and position as shown above and on the Joint Details, unless noted otherwise. Refer to drawings 160A-Z for standard plate positions. Refer to job's General Notes page for additional information.

Alpine, a division of ITW Building Components Group Inc. shall not be responsible for any deviation from this drawing, any failure to build the truss in conformance with ANSI/TPI 1, or for handling, shipping, installation and bracing of trusses. A seal on this drawing or cover page listing this drawing, indicates acceptance of professional engineering responsibility solely for the design shown. The suitability and use of this drawing for any structure is the responsibility of the Building Designer per ANSI/TPI 1 Sec.2.

For more information see these web sites: Alpine: www.alpineitw.com; TPI: www.tpinst.org; SBCA: www.sbcindustry.com; ICC: www.iccsafe.org

ALPINE AN ITW COMPANY
6750 Forum Drive
Suite 305
Orlando FL, 32821

Hangers / Ties

Simpson Construction Hardware is specified based on the most current information provided by Simpson Strong-Tie. Please refer to the most recent Simpson Strong-Tie catalog for additional information.

Recommended hanger connections are based on manufacturer tested capacities and calculations. Conditions may exist that require different connections than indicated. Refer to manufacturer publication for additional information.

Bearing at location x=55'5" uses the following support conditions: 55'5"
Bearing M (55'5", 10'1"2) HGUS28
Supporting Member: (3)2x8 SP SS Dense
(36) 0.148"x3" nails into supporting member,
(6) 0.148"x3" nails into supported member.

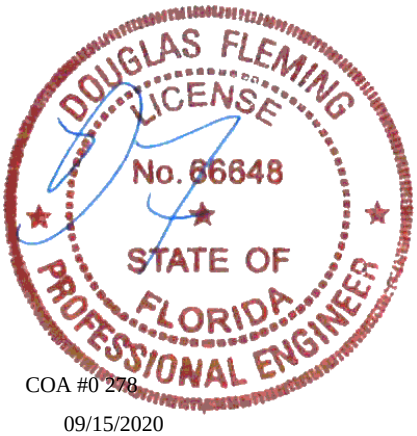

COA #0 278

09/15/2020

****WARNING**** READ AND FOLLOW ALL NOTES ON THIS DRAWING!
****IMPORTANT**** FURNISH THIS DRAWING TO ALL CONTRACTORS INCLUDING THE INSTALLERS

Trusses require extreme care in fabricating, handling, shipping, installing and bracing. Refer to and follow the latest edition of BCSI (Building Component Safety Information, by TPI and SBCA) for safety practices prior to performing these functions. Installers shall provide temporary bracing per BCSI. Unless noted otherwise, top chord shall have properly attached structural sheathing and bottom chord shall have a properly attached rigid ceiling. Locations shown for permanent lateral restraint of webs shall have bracing installed per BCSI sections B3, B7, or B10, as applicable. Apply plates to each face of truss and position as shown above and on the Joint Details, unless noted otherwise. Refer to drawings 160A-Z for standard plate positions. Refer to job's General Notes page for additional information.

Alpine, a division of ITW Building Components Group Inc. shall not be responsible for any deviation from this drawing, any failure to build the truss in conformance with ANSI/TPI 1, or for handling, shipping, installation and bracing of trusses. A seal on this drawing or cover page listing this drawing, indicates acceptance of professional engineering responsibility solely for the design shown. The suitability and use of this drawing for any structure is the responsibility of the Building Designer per ANSI/TPI 1 Sec.2.

For more information see these web sites: Alpine: www.alpineitw.com; TPI: www.tpinst.org; SBCA: www.sbcindustry.com; ICC: www.iccsafe.org

ALPINE AN ITW COMPANY
6750 Forum Drive
Suite 305
Orlando FL, 32821

SEQN: 65945 HIPM FROM: RNB Page 1 of 2	Ply: 3 Qty: 1	**Job Number:** b51385aa -terrell floor plan Trademark Const Group **Truss Label:** MHG1	Cust: R 857 JRef:1WYP8570001 T73 DrwNo: 259.20.1003.33177 SSB / DF 09/15/2020

3 Complete Trusses Required

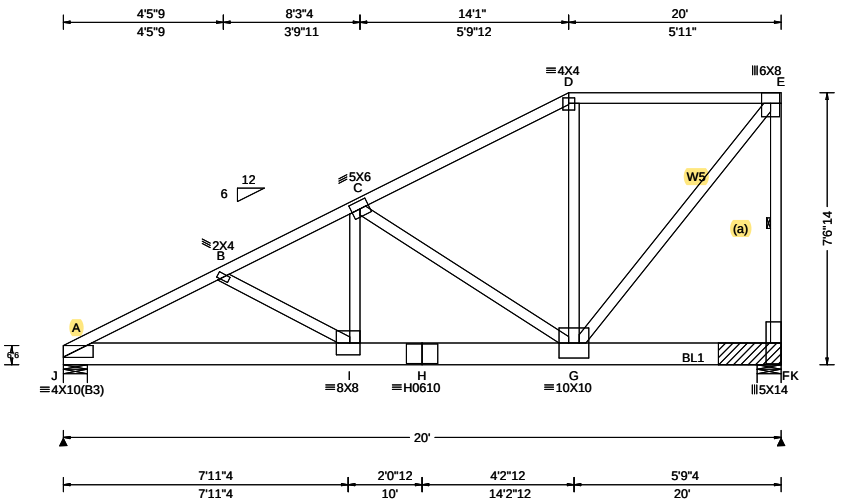

Loading Criteria (psf)
TCLL: 20.00
TCDL: 7.00
BCLL: 0.00
BCDL: 10.00
Des Ld: 37.00
NCBCLL: 0.00
Soffit: 2.00
Load Duration: 1.25
Spacing: 24.0 "

Wind Criteria
Wind Std: ASCE 7-10
Speed: 130 mph
Enclosure: Closed
Risk Category: II
EXP: B Kzt: NA
Mean Height: 15.00 ft
TCDL: 0.0 psf
BCDL: 0.0 psf
MWFRS Parallel Dist: 0 to h/2
C&C Dist a: 3.00 ft
Loc. from endwall: Any
GCpi: 0.18
Wind Duration: 1.60

Snow Criteria (Pg,Pf in PSF)
Pg: NA Ct: NA CAT: NA
Pf: NA Ce: NA
Lu: NA Cs: NA
Snow Duration: NA

Building Code:
FBC 2017 RES
TPI Std: 2014
Rep Fac: Yes
FT/RT:20(0)/0(0)
Plate Type(s):
WAVE, HS

Defl/CSI Criteria

PP Deflection in	loc	L/defl	L/#
VERT(LL): 0.126	I	999	360
VERT(CL): 0.234	I	999	240
HORZ(LL): 0.028	B	-	-
HORZ(TL): 0.052	B	-	-

Creep Factor: 2.0
Max TC CSI: 0.999
Max BC CSI: 0.833
Max Web CSI: 0.979

VIEW Ver: 18.02.01A.0205.19

▲Maximum Reactions (lbs)

Loc	Gravity R+	/ R-	/ Rh	Non-Gravity / Rw	/ U	/ RL
J	7237	/-	/-	/-	/2488	/101
K	21188	/-	/-	/-	/6545	/-

Wind reactions based on MWFRS
J Brg Width = 8.0 Min Req = 3.5
K Brg Width = 8.0 Min Req = -
Bearings J & K Fcperp = 425psi.
Members not listed have forces less than 375#

Maximum Top Chord Forces Per Ply (lbs)

Chords	Tens.	Comp.	Chords	Tens.	Comp.
A - B	1726	-4991	C - D	974	-2947
B - C	1712	-4968	D - E	874	-2650

Maximum Bot Chord Forces Per Ply (lbs)

Chords	Tens.	Comp.	Chords	Tens.	Comp.
A - I	4427	-1496	H - G	4329	-1455
I - H	4329	-1455			

Maximum Web Forces Per Ply (lbs)

Webs	Tens.	Comp.	Webs	Tens.	Comp.
I - C	2006	-730	G - E	4211	-1362
C - G	757	-2073	E - F	1078	-3317
D - G	1220	-393			

Lumber
Top chord: 2x4 SP #1;
Bot chord: 2x8 SP SS Dense;
Webs: 2x4 SP #3; W5 2x4 SP #1;

Bracing
(a) Continuous lateral restraint equally spaced on member.

Nailnote
Nail Schedule:0.128"x3", min. nails
Top Chord: 1 Row @12.00" o.c.
Bot Chord: 3 Rows @ 3.00" o.c. (Each Row)
Webs : 1 Row @ 4" o.c.
Repeat nailing as each layer is applied. Use equal spacing between rows and stagger nails in each row to avoid splitting.
(1) 1/2" bolts may be used for
(2) 0.128"x3", min. nails on
The Bottom Chord Only.

Special Loads
------(Lumber Dur.Fac.=1.25 / Plate Dur.Fac.=1.25)

TC: From	56 plf at	0.00 to	56 plf at	8.13
TC: From	28 plf at	8.13 to	28 plf at	14.08
TC: From	56 plf at	14.08 to	56 plf at	20.00
BC: From	20 plf at	0.00 to	20 plf at	8.13
BC: From	10 plf at	8.13 to	10 plf at	20.00

BC: 5005 lb Conc. Load at 8.13
BC: 2097 lb Conc. Load at 10.06,12.06,14.06,16.06 18.06
BC: 11703 lb Conc. Load at 19.23 +

+16-(0.131"x3.0") nails opposite hanger after third ply is attached.

Plating Notes
Plates sized for a minimum of 3.50 sq.in./piece.

Purlins
In lieu of structural panels or rigid ceiling use purlins to laterally brace chords as follows:

Chord	Spacing(in oc)	Start(ft)	End(ft)
TC	58	0.00	14.08
TC	24	14.08	20.00
BC	120	0.15	20.00

Apply purlins to any chords above or below fillers at 24" OC unless shown otherwise above.

DOUGLAS FLEMING LICENSE No. 66648 STATE OF FLORIDA PROFESSIONAL ENGINEER

COA #0 278

09/15/2020

****WARNING**** READ AND FOLLOW ALL NOTES ON THIS DRAWING!
****IMPORTANT**** FURNISH THIS DRAWING TO ALL CONTRACTORS INCLUDING THE INSTALLERS

Trusses require extreme care in fabricating, handling, shipping, installing and bracing. Refer to and follow the latest edition of BCSI (Building Component Safety Information, by TPI and SBCA) for safety practices prior to performing these functions. Installers shall provide temporary bracing per BCSI. Unless noted otherwise, top chord shall have properly attached structural sheathing and bottom chord shall have a properly attached rigid ceiling. Locations shown for permanent lateral restraint of webs shall have bracing installed per BCSI sections B3, B7, or B10, as applicable. Apply plates to each face of truss and position as shown above and on the Joint Details, unless noted otherwise. Refer to drawings 160A-Z for standard plate positions. Refer to job's General Notes page for additional information.

Alpine, a division of ITW Building Components Group Inc. shall not be responsible for any deviation from this drawing, any failure to build the truss in conformance with ANSI/TPI 1, or for handling, shipping, installation and bracing of trusses. A seal on this drawing or cover page listing this drawing, indicates acceptance of professional engineering responsibility solely for the design shown. The suitability and use of this drawing for any structure is the responsibility of the Building Designer per ANSI/TPI 1 Sec.2.

For more information see these web sites: Alpine: www.alpineitw.com; TPI: www.tpinst.org; SBCA: www.sbcindustry.com; ICC: www.iccsafe.org

ALPINE AN ITW COMPANY
6750 Forum Drive
Suite 305
Orlando FL, 32821

Wind

Wind loads and reactions based on MWFRS.

Right end vertical exposed to wind pressure.
Deflection meets L/180.

Bearing Block(s)

Brg blocks:0.128"x3", min. nails

brg	x-loc	#blocks	length/blk	#nails/blk	wall plate
2	19.333'	1	21"	37	SPF Standard

Brg block to be same size and species as chord.
Refer to drawing CNNAILSP1014 for more information.

Blocking

Full Height Blocking reinforcement required to prevent buckling of members over the bearings:
bearing 2 located at 19.3'

It is the responsibility of the Building Designer and Truss Fabricator to review this drawing prior to cutting lumber to verify that all data,including dimensions and loads, conform to the architectural plans/specifications and fabricators truss layout.

DOUGLAS FLEMING
LICENSE
No. 66648
STATE OF
FLORIDA
PROFESSIONAL ENGINEER

COA #0 278

09/15/2020

****WARNING**** READ AND FOLLOW ALL NOTES ON THIS DRAWING!
****IMPORTANT**** FURNISH THIS DRAWING TO ALL CONTRACTORS INCLUDING THE INSTALLERS

Trusses require extreme care in fabricating, handling, shipping, installing and bracing. Refer to and follow the latest edition of BCSI (Building Component Safety Information, by TPI and SBCA) for safety practices prior to performing these functions. Installers shall provide temporary bracing per BCSI. Unless noted otherwise, top chord shall have properly attached structural sheathing and bottom chord shall have a properly attached rigid ceiling. Locations shown for permanent lateral restraint of webs shall have bracing installed per BCSI sections B3, B7, or B10, as applicable. Apply plates to each face of truss and position as shown above and on the Joint Details, unless noted otherwise. Refer to drawings 160A-Z for standard plate positions. Refer to job's General Notes page for additional information.

Alpine, a division of ITW Building Components Group Inc. shall not be responsible for any deviation from this drawing, any failure to build the truss in conformance with ANSI/TPI 1, or for handling, shipping, installation and bracing of trusses. A seal on this drawing or cover page listing this drawing, indicates acceptance of professional engineering responsibility solely for the design shown. The suitability and use of this drawing for any structure is the responsibility of the Building Designer per ANSI/TPI 1 Sec.2.

For more information see these web sites: Alpine: www.alpineitw.com; TPI: www.tpinst.org; SBCA: www.sbcindustry.com; ICC: www.iccsafe.org

ALPINE
AN ITW COMPANY
6750 Forum Drive
Suite 305
Orlando FL, 32821

SEQN: 65968 HIPM	Ply: 2	**Job Number:** b51385aa	Cust: R 857 JRef:1WYP8570001 T84
FROM: RNB	Qty: 1	-terrell floor plan Trademark Const Group	DrwNo: 259.20.1003.36530
Page 1 of 2		**Truss Label:** MHG2	SSB / DF 09/15/2020

2 Complete Trusses Required

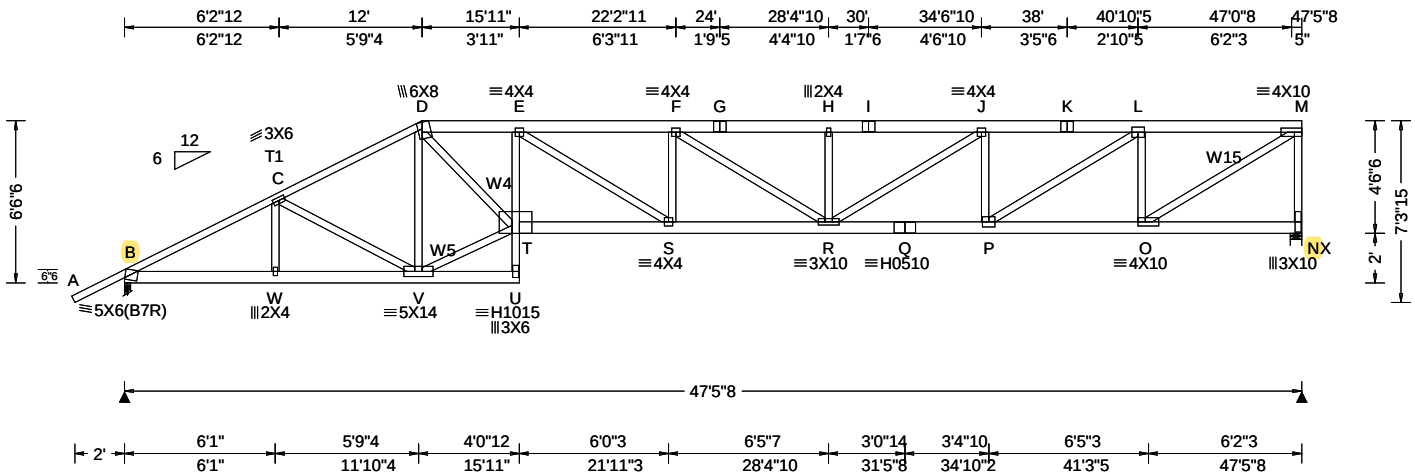

Loading Criteria (psf)

TCLL: 20.00
TCDL: 7.00
BCLL: 0.00
BCDL: 10.00
Des Ld: 37.00
NCBCLL: 0.00
Soffit: 2.00
Load Duration: 1.25
Spacing: 24.0 "

Wind Criteria

Wind Std: ASCE 7-10
Speed: 130 mph
Enclosure: Closed
Risk Category: II
EXP: B Kzt: NA
Mean Height: 15.00 ft
TCDL: 0.0 psf
BCDL: 0.0 psf
MWFRS Parallel Dist: 0 to h/2
C&C Dist a: 4.75 ft
Loc. from endwall: Any
GCpi: 0.18
Wind Duration: 1.60

Snow Criteria (Pg,Pf in PSF)

Pg: NA Ct: NA CAT: NA
Pf: NA Ce: NA
Lu: NA Cs: NA
Snow Duration: NA

Building Code:
FBC 2017 RES
TPI Std: 2014
Rep Fac: No
FT/RT:20(0)/0(0)
Plate Type(s):
WAVE, HS

Defl/CSI Criteria

PP Deflection in	loc	L/defl	L/#
VERT(LL): 0.506	F	999	360
VERT(CL): 0.939	F	605	240
HORZ(LL): 0.148	O	-	-
HORZ(TL): 0.274	O	-	-

Creep Factor: 2.0
Max TC CSI: 0.993
Max BC CSI: 0.994
Max Web CSI: 0.904

VIEW Ver: 18.02.01A.0205.19

▲Maximum Reactions (lbs)

Loc	Gravity R+	/ R-	/ Rh	Non-Gravity / Rw	/ U	/ RL
B	4221	/-	/-	/-	/1455	/55
X	4400	/-	/-	/-	/1629	/-

Wind reactions based on MWFRS
B Brg Width = 3.0 Min Req = 2.9
X Brg Width = 5.5 Min Req = 3.1
Bearings B & X Fcperp = 425psi.
Members not listed have forces less than 375#

Maximum Top Chord Forces Per Ply (lbs)

Chords	Tens.	Comp.	Chords	Tens.	Comp.
B - C	1373	- 3979	H - I	2334	- 6390
C - D	1391	- 4006	I - J	2334	- 6390
D - E	2184	- 6215	J - K	1900	- 5146
E - F	2411	- 6701	K - L	1900	- 5146
F - G	2334	- 6390	L - M	1145	- 3066
G - H	2334	- 6390			

Maximum Bot Chord Forces Per Ply (lbs)

Chords	Tens.	Comp.	Chords	Tens.	Comp.
B - W	3513	- 1183	R - Q	5217	- 1900
W - V	3517	- 1184	Q - P	5217	- 1900
T - S	6246	- 2168	P - O	3181	- 1162
S - R	6704	- 2389			

Maximum Web Forces Per Ply (lbs)

Webs	Tens.	Comp.	Webs	Tens.	Comp.
V - D	470	- 1310	R - J	1406	- 489
V - T	4019	- 1361	J - P	380	- 1001
D - T	3798	- 1361	P - L	2373	- 858
T - E	242	- 544	L - O	617	- 1607
E - S	554	- 262	O - M	3650	- 1347
F - R	98	- 377	M - N	777	- 2076

Lumber

Top chord: 2x6 SP #1; T1 2x4 SP #1;
Bot chord: 2x6 SP #1;
Webs: 2x4 SP #3; W4,W5,W15 2x4 SP #1;

Nailnote

Nail Schedule:0.128"x3", min. nails
Top Chord: 1 Row @12.00" o.c.
Bot Chord: 1 Row @12.00" o.c.
Webs : 1 Row @ 4" o.c.
Use equal spacing between rows and stagger nails in each row to avoid splitting.
(1) 1/2" bolts may be used for
(2) 0.128"x3", min. nails on
The Bottom Chord Only.

Special Loads

------(Lumber Dur.Fac.=1.25 / Plate Dur.Fac.=1.25)

TC: From	56 plf at	-2.13 to	56 plf at	12.00
TC: From	28 plf at	12.00 to	28 plf at	47.46
BC: From	4 plf at	-2.13 to	4 plf at	0.00
BC: From	20 plf at	0.00 to	20 plf at	12.06
BC: From	10 plf at	12.06 to	10 plf at	47.46

TC: 359 lb Conc. Load at 12.06
TC: 205 lb Conc. Load at 14.13
TC: 94 lb Conc. Load at 16.13,18.13,20.13,22.13 24.13,26.13,28.13,30.13,32.13,34.13,36.13,38.13 40.13,42.13,44.13,46.13
BC: 849 lb Conc. Load at 12.06
BC: 223 lb Conc. Load at 14.13
BC: 194 lb Conc. Load at 16.13,18.13,20.13,22.13 24.13,26.13,28.13,30.13,32.13,34.13,36.13,38.13 40.13,42.13,44.13,46.13

Plating Notes

All plates are 5X6 except as noted.

Plates sized for a minimum of 3.50 sq.in./piece.

Purlins

In lieu of structural panels or rigid ceiling use purlins to laterally brace chords as follows:

Chord	Spacing(in oc)	Start(ft)	End(ft)
TC	40	-2.07	12.00
TC	24	12.00	47.46
BC	120	0.13	15.77
BC	91	15.82	47.46

Apply purlins to any chords above or below fillers at 24" OC unless shown otherwise above.

DOUGLAS FLEMING LICENSE No. 66648 STATE OF FLORIDA PROFESSIONAL ENGINEER

COA #0 278

09/15/2020

****WARNING**** READ AND FOLLOW ALL NOTES ON THIS DRAWING!
****IMPORTANT**** FURNISH THIS DRAWING TO ALL CONTRACTORS INCLUDING THE INSTALLERS

Trusses require extreme care in fabricating, handling, shipping, installing and bracing. Refer to and follow the latest edition of BCSI (Building Component Safety Information, by TPI and SBCA) for safety practices prior to performing these functions. Installers shall provide temporary bracing per BCSI. Unless noted otherwise, top chord shall have properly attached structural sheathing and bottom chord shall have a properly attached rigid ceiling. Locations shown for permanent lateral restraint of webs shall have bracing installed per BCSI sections B3, B7, or B10, as applicable. Apply plates to each face of truss and position as shown above and on the Joint Details, unless noted otherwise. Refer to drawings 160A-Z for standard plate positions. Refer to job's General Notes page for additional information.

Alpine, a division of ITW Building Components Group Inc. shall not be responsible for any deviation from this drawing, any failure to build the truss in conformance with ANSI/TPI 1, or for handling, shipping, installation and bracing of trusses. A seal on this drawing or cover page listing this drawing, indicates acceptance of professional engineering responsibility solely for the design shown. The suitability and use of this drawing for any structure is the responsibility of the Building Designer per ANSI/TPI 1 Sec.2.

For more information see these web sites: Alpine: www.alpineitw.com; TPI: www.tpinst.org; SBCA: www.sbcindustry.com; ICC: www.iccsafe.org

ALPINE AN ITW COMPANY
6750 Forum Drive
Suite 305
Orlando FL, 32821

Wind

Wind loads and reactions based on MWFRS.

Right end vertical exposed to wind pressure.
Deflection meets L/180.

Additional Notes

WARNING: Furnish a copy of this DWG to the installation contractor. Special care must be taken during handling, shipping and installation of trusses. See "WARNING" note below.

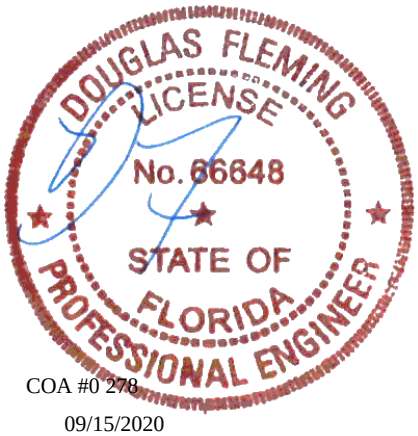

COA #0 278

09/15/2020

****WARNING**** READ AND FOLLOW ALL NOTES ON THIS DRAWING!
****IMPORTANT**** FURNISH THIS DRAWING TO ALL CONTRACTORS INCLUDING THE INSTALLERS

Trusses require extreme care in fabricating, handling, shipping, installing and bracing. Refer to and follow the latest edition of BCSI (Building Component Safety Information, by TPI and SBCA) for safety practices prior to performing these functions. Installers shall provide temporary bracing per BCSI. Unless noted otherwise, top chord shall have properly attached structural sheathing and bottom chord shall have a properly attached rigid ceiling. Locations shown for permanent lateral restraint of webs shall have bracing installed per BCSI sections B3, B7, or B10, as applicable. Apply plates to each face of truss and position as shown above and on the Joint Details, unless noted otherwise. Refer to drawings 160A-Z for standard plate positions. Refer to job's General Notes page for additional information.

Alpine, a division of ITW Building Components Group Inc. shall not be responsible for any deviation from this drawing, any failure to build the truss in conformance with ANSI/TPI 1, or for handling, shipping, installation and bracing of trusses. A seal on this drawing or cover page listing this drawing, indicates acceptance of professional engineering responsibility solely for the design shown. The suitability and use of this drawing for any structure is the responsibility of the Building Designer per ANSI/TPI 1 Sec.2.

For more information see these web sites: Alpine: www.alpineitw.com; TPI: www.tpinst.org; SBCA: www.sbcindustry.com; ICC: www.iccsafe.org

ALPINE
AN ITW COMPANY
6750 Forum Drive
Suite 305
Orlando FL, 32821

SEQN: 65940 HIPM	Ply: 2	**Job Number:** b51385aa	Cust: R 857 JRef:1WYP8570001 T39
FROM: RNB	Qty: 1	-terrell floor plan Trademark Const Group	DrwNo: 259.20.1003.40380
Page 1 of 2		**Truss Label:** MHG3	SSB / DF 09/15/2020

2 Complete Trusses Required

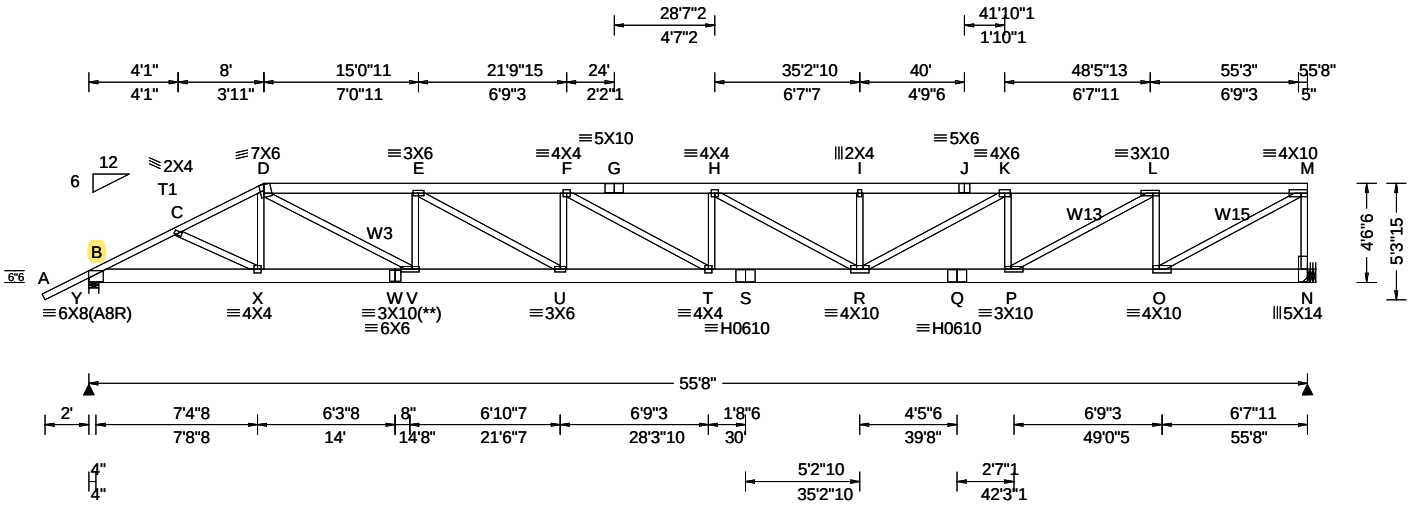

Loading Criteria (psf)

TCLL: 20.00
TCDL: 7.00
BCLL: 0.00
BCDL: 10.00
Des Ld: 37.00
NCBCLL: 0.00
Soffit: 2.00
Load Duration: 1.25
Spacing: 24.0 "

Wind Criteria

Wind Std: ASCE 7-10
Speed: 130 mph
Enclosure: Closed
Risk Category: II
EXP: B Kzt: NA
Mean Height: 15.00 ft
TCDL: 0.0 psf
BCDL: 0.0 psf
MWFRS Parallel Dist: 0 to h/2
C&C Dist a: 5.57 ft
Loc. from endwall: Any
GCpi: 0.18
Wind Duration: 1.60

Snow Criteria (Pg,Pf in PSF)

Pg: NA Ct: NA CAT: NA
Pf: NA Ce: NA
Lu: NA Cs: NA
Snow Duration: NA

Building Code:
FBC 2017 RES
TPI Std: 2014
Rep Fac: No
FT/RT:20(0)/0(0)
Plate Type(s):
WAVE, HS

Defl/CSI Criteria

PP Deflection in	loc	L/defl	L/#
VERT(LL): 0.748	T	890	360
VERT(CL): 1.387	T	480	240
HORZ(LL): 0.128	D	-	-
HORZ(TL): 0.238	D	-	-

Creep Factor: 2.0
Max TC CSI: 0.998
Max BC CSI: 0.979
Max Web CSI: 0.733

VIEW Ver: 18.02.01A.0205.19

▲Maximum Reactions (lbs)

Loc	Gravity R+	Gravity / R-	Gravity / Rh	Non-Gravity / Rw	Non-Gravity / U	Non-Gravity / RL
Y	4992	/-	/-	/-	/1843	/-
N	5005	/-	/-	/-	/1905	/-

Wind reactions based on MWFRS
Y Brg Width = 5.5 Min Req = 3.5
N Brg Width = - Min Req = -
Bearing Y Fcperp = 425psi.
Members not listed have forces less than 375#

Maximum Top Chord Forces Per Ply (lbs)

Chords	Tens.	Comp.	Chords	Tens.	Comp.
B - C	1833	- 4929	H - I	3129	- 8234
C - D	1826	- 4922	I - J	3129	- 8234
D - E	2641	- 7013	J - K	3129	- 8234
E - F	3193	- 8440	K - L	2490	- 6548
F - G	3370	- 8883	L - M	1457	- 3828
G - H	3370	- 8883			

Maximum Bot Chord Forces Per Ply (lbs)

Chords	Tens.	Comp.	Chords	Tens.	Comp.
B - X	4361	- 1620	T - S	8874	- 3368
X - W	4389	- 1631	S - R	8874	- 3368
W - V	4389	- 1631	R - Q	6637	- 2525
V - U	7094	- 2674	Q - P	6637	- 2525
U - T	8477	- 3209	P - O	3965	- 1511

Maximum Web Forces Per Ply (lbs)

Webs	Tens.	Comp.	Webs	Tens.	Comp.
D - V	3054	- 1175	R - K	1866	- 705
V - E	464	- 1127	K - P	487	- 1218
E - U	1583	- 610	P - L	3037	- 1151
U - F	222	- 502	L - O	748	- 1887
F - T	478	- 188	O - M	4447	- 1692
H - R	280	- 748	M - N	909	- 2363

Lumber

Top chord: 2x6 SP #1; T1 2x4 SP #1;
Bot chord: 2x8 SP SS Dense;
Webs: 2x4 SP #3; W3,W13,W15 2x4 SP #1;

Nailnote

Nail Schedule:0.128"x3", min. nails
Top Chord: 1 Row @12.00" o.c.
Bot Chord: 1 Row @12.00" o.c.
Webs : 1 Row @ 4" o.c.
Use equal spacing between rows and stagger nails in each row to avoid splitting.
(1) 1/2" bolts may be used for
(2) 0.128"x3", min. nails on
The Bottom Chord Only.

Special Loads

------(Lumber Dur.Fac.=1.25 / Plate Dur.Fac.=1.25)

TC: From	56 plf at	-2.13 to	56 plf at	8.00
TC: From	28 plf at	8.00 to	28 plf at	55.67
BC: From	4 plf at	-2.13 to	4 plf at	0.00
BC: From	20 plf at	0.00 to	20 plf at	8.06
BC: From	10 plf at	8.06 to	10 plf at	55.67

TC: 217 lb Conc. Load at 8.06
TC: 94 lb Conc. Load at 10.13,12.13,14.13,16.13 18.13,20.13,22.13,24.13,26.13,28.13,30.13,32.13 34.13,36.13,38.13,40.13,42.13,44.13,46.13,48.13 50.13,52.13,54.13
BC: 619 lb Conc. Load at 8.06
BC: 194 lb Conc. Load at 10.13,12.13,14.13,16.13 18.13,20.13,22.13,24.13,26.13,28.13,30.13,32.13 34.13,36.13,38.13,40.13,42.13,44.13,46.13,48.13 50.13,52.13,54.13

Plating Notes

(**) 1 plate(s) require special positioning. Refer to scaled plate plot details for special positioning requirements.

Plates sized for a minimum of 3.50 sq.in./piece.

Purlins

In lieu of structural panels or rigid ceiling use purlins to laterally brace chords as follows:

Chord	Spacing(in oc)	Start(ft)	End(ft)
TC	29	-2.07	8.00
TC	24	8.00	55.67
BC	96	0.15	55.67

Apply purlins to any chords above or below fillers at 24" OC unless shown otherwise above.

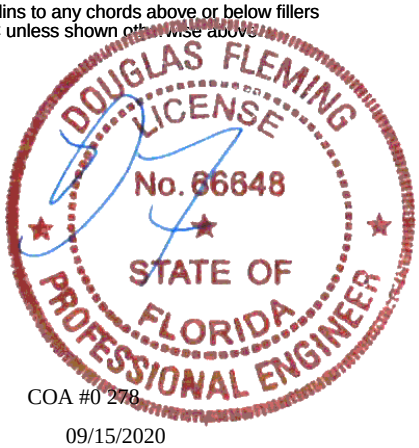

COA #0 278

09/15/2020

****WARNING**** READ AND FOLLOW ALL NOTES ON THIS DRAWING!
****IMPORTANT**** FURNISH THIS DRAWING TO ALL CONTRACTORS INCLUDING THE INSTALLERS

Trusses require extreme care in fabricating, handling, shipping, installing and bracing. Refer to and follow the latest edition of BCSI (Building Component Safety Information, by TPI and SBCA) for safety practices prior to performing these functions. Installers shall provide temporary bracing per BCSI. Unless noted otherwise, top chord shall have properly attached structural sheathing and bottom chord shall have a properly attached rigid ceiling. Locations shown for permanent lateral restraint of webs shall have bracing installed per BCSI sections B3, B7, or B10, as applicable. Apply plates to each face of truss and position as shown above and on the Joint Details, unless noted otherwise. Refer to drawings 160A-Z for standard plate positions. Refer to job's General Notes page for additional information.

Alpine, a division of ITW Building Components Group Inc. shall not be responsible for any deviation from this drawing, any failure to build the truss in conformance with ANSI/TPI 1, or for handling, shipping, installation and bracing of trusses. A seal on this drawing or cover page listing this drawing, indicates acceptance of professional engineering responsibility solely for the design shown. The suitability and use of this drawing for any structure is the responsibility of the Building Designer per ANSI/TPI 1 Sec.2.

For more information see these web sites: Alpine: www.alpineitw.com; TPI: www.tpinst.org; SBCA: www.sbcindustry.com; ICC: www.iccsafe.org

ALPINE AN ITW COMPANY
6750 Forum Drive
Suite 305
Orlando FL, 32821

Hangers / Ties

Simpson Construction Hardware is specified based on the most current information provided by Simpson Strong-Tie. Please refer to the most recent Simpson Strong-Tie catalog for additional information.

Recommended hanger connections are based on manufacturer tested capacities and calculations. Conditions may exist that require different connections than indicated. Refer to manufacturer publication for additional information.

Bearing at location x=55'5" uses the following support conditions: 55'5"
Bearing N (55'5", 10'1"2) HGUS28-2
Supporting Member: (3)2x8 SP SS Dense
(36) 0.148"x3" nails into supporting member,
(12) 0.148"x3" nails into supported member.

Wind

Wind loads and reactions based on MWFRS.

Right end vertical not exposed to wind pressure.

Additional Notes

WARNING: Furnish a copy of this DWG to the installation contractor. Special care must be taken during handling, shipping and installation of trusses. See "WARNING" note below.

DOUGLAS FLEMING
LICENSE
No. 66648
STATE OF
FLORIDA
PROFESSIONAL ENGINEER

COA #0 278

09/15/2020

****WARNING**** READ AND FOLLOW ALL NOTES ON THIS DRAWING!
****IMPORTANT**** FURNISH THIS DRAWING TO ALL CONTRACTORS INCLUDING THE INSTALLERS

Trusses require extreme care in fabricating, handling, shipping, installing and bracing. Refer to and follow the latest edition of BCSI (Building Component Safety Information, by TPI and SBCA) for safety practices prior to performing these functions. Installers shall provide temporary bracing per BCSI. Unless noted otherwise, top chord shall have properly attached structural sheathing and bottom chord shall have a properly attached rigid ceiling. Locations shown for permanent lateral restraint of webs shall have bracing installed per BCSI sections B3, B7, or B10, as applicable. Apply plates to each face of truss and position as shown above and on the Joint Details, unless noted otherwise. Refer to drawings 160A-Z for standard plate positions. Refer to job's General Notes page for additional information.

Alpine, a division of ITW Building Components Group Inc. shall not be responsible for any deviation from this drawing, any failure to build the truss in conformance with ANSI/TPI 1, or for handling, shipping, installation and bracing of trusses. A seal on this drawing or cover page listing this drawing, indicates acceptance of professional engineering responsibility solely for the design shown. The suitability and use of this drawing for any structure is the responsibility of the Building Designer per ANSI/TPI 1 Sec.2.

For more information see these web sites: Alpine: www.alpineitw.com; TPI: www.tpinst.org; SBCA: www.sbcindustry.com; ICC: www.iccsafe.org

ALPINE
AN ITW COMPANY
6750 Forum Drive
Suite 305
Orlando FL, 32821

SEQN: 65888 SPEC FROM: RNB	Ply: 1 Qty: 1	**Job Number:** b51385aa -terrell floor plan Trademark Const Group **Truss Label:** S1	Cust: R 857 JRef:1WYP8570001 T7 DrwNo: 259.20.1003.42170 SSB / DF 09/15/2020

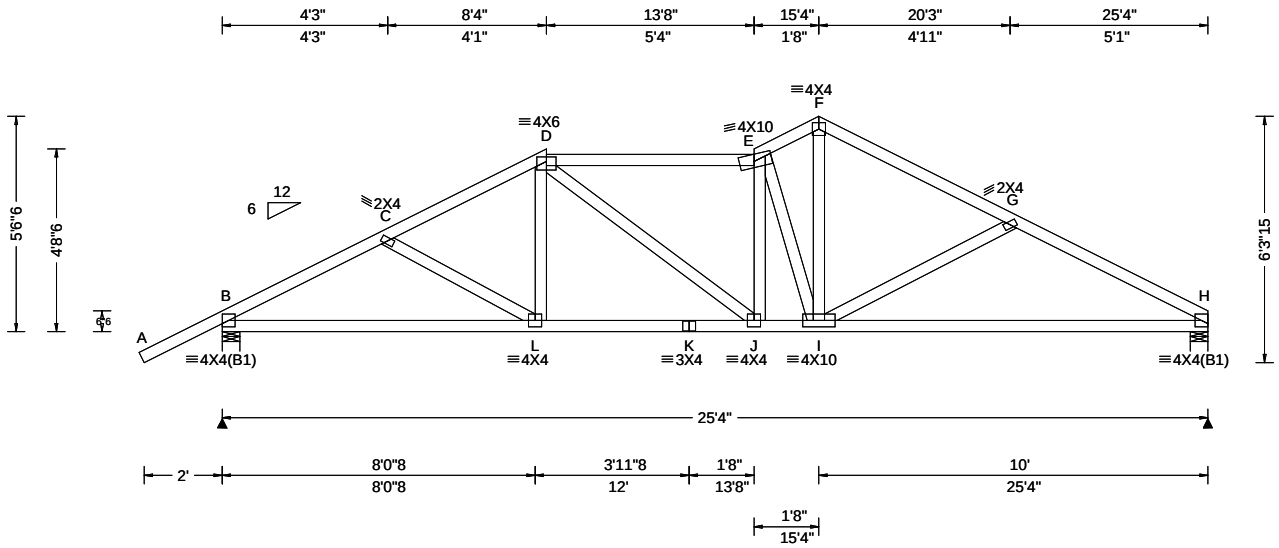

Loading Criteria (psf)

TCLL:	20.00
TCDL:	7.00
BCLL:	0.00
BCDL:	10.00
Des Ld:	37.00
NCBCLL:	10.00
Soffit:	2.00

Load Duration: 1.25
Spacing: 24.0 "

Wind Criteria
Wind Std: ASCE 7-10
Speed: 130 mph
Enclosure: Closed
Risk Category: II
EXP: B Kzt: NA
Mean Height: 15.00 ft
TCDL: 0.0 psf
BCDL: 0.0 psf
MWFRS Parallel Dist: h to 2h
C&C Dist a: 3.00 ft
Loc. from endwall: not in 9.00 ft
GCpi: 0.18
Wind Duration: 1.60

Snow Criteria (Pg,Pf in PSF)
Pg: NA Ct: NA CAT: NA
Pf: NA Ce: NA
Lu: NA Cs: NA
Snow Duration: NA

Building Code:
FBC 2017 RES
TPI Std: 2014
Rep Fac: Yes
FT/RT:20(0)/0(0)
Plate Type(s):
WAVE

Defl/CSI Criteria

PP Deflection in	loc	L/defl	L/#
VERT(LL): 0.082	E	999	360
VERT(CL): 0.152	E	999	240
HORZ(LL): 0.031	I	-	-
HORZ(TL): 0.057	I	-	-

Creep Factor: 2.0
Max TC CSI: 0.980
Max BC CSI: 0.711
Max Web CSI: 0.365

VIEW Ver: 18.02.01A.0205.19

▲Maximum Reactions (lbs)

Loc	Gravity R+	/ R-	/ Rh	Non-Gravity / Rw	/ U	/ RL
B	1088	/-	/-	/573	/251	/110
H	953	/-	/-	/492	/212	/-

Wind reactions based on MWFRS
B Brg Width = 5.5 Min Req = 1.5
H Brg Width = 5.5 Min Req = 1.5
Bearings B & H Fcperp = 425psi.
Members not listed have forces less than 375#

Maximum Top Chord Forces Per Ply (lbs)

Chords	Tens.	Comp.	Chords	Tens.	Comp.
B - C	735	-1579	E - F	659	-1286
C - D	677	-1419	F - G	632	-1317
D - E	721	-1377	G - H	752	-1597

Maximum Bot Chord Forces Per Ply (lbs)

Chords	Tens.	Comp.	Chords	Tens.	Comp.
B - L	1336	-618	J - I	1377	-586
L - K	1232	-520	I - H	1366	-620
K - J	1232	-520			

Maximum Web Forces Per Ply (lbs)

Webs	Tens.	Comp.	Webs	Tens.	Comp.
E - I	428	-707	F - I	957	-478

Lumber
Top chord: 2x4 SP #1;
Bot chord: 2x4 SP #1;
Webs: 2x4 SP #3;

Plating Notes
Plates sized for a minimum of 3.50 sq.in./piece.

Purlins
In lieu of structural panels or rigid ceiling use purlins to laterally brace chords as follows:

Chord	Spacing(in oc)	Start(ft)	End(ft)
TC	48	-2.07	8.33
TC	24	8.33	13.67
TC	23	13.67	15.33
TC	56	15.33	25.23
BC	120	0.17	25.16

Apply purlins to any chords above or below fillers at 24" OC unless shown otherwise above.

Wind
Wind loads based on MWFRS with additional C&C member design.

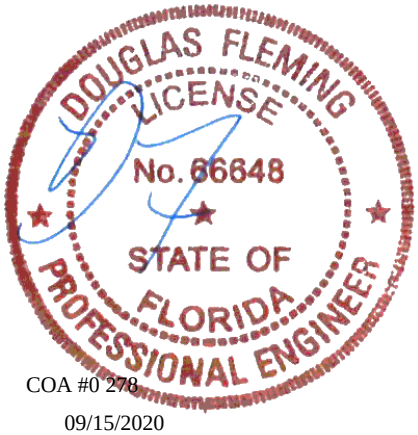

COA #0 278

09/15/2020

****WARNING**** READ AND FOLLOW ALL NOTES ON THIS DRAWING!
****IMPORTANT**** FURNISH THIS DRAWING TO ALL CONTRACTORS INCLUDING THE INSTALLERS

Trusses require extreme care in fabricating, handling, shipping, installing and bracing. Refer to and follow the latest edition of BCSI (Building Component Safety Information, by TPI and SBCA) for safety practices prior to performing these functions. Installers shall provide temporary bracing per BCSI. Unless noted otherwise, top chord shall have properly attached structural sheathing and bottom chord shall have a properly attached rigid ceiling. Locations shown for permanent lateral restraint of webs shall have bracing installed per BCSI sections B3, B7, or B10, as applicable. Apply plates to each face of truss and position as shown above and on the Joint Details, unless noted otherwise. Refer to drawings 160A-Z for standard plate positions. Refer to job's General Notes page for additional information.

Alpine, a division of ITW Building Components Group Inc. shall not be responsible for any deviation from this drawing, any failure to build the truss in conformance with ANSI/TPI 1, or for handling, shipping, installation and bracing of trusses. A seal on this drawing or cover page listing this drawing, indicates acceptance of professional engineering responsibility solely for the design shown. The suitability and use of this drawing for any structure is the responsibility of the Building Designer per ANSI/TPI 1 Sec.2.

For more information see these web sites: Alpine: www.alpineitw.com; TPI: www.tpinst.org; SBCA: www.sbcindustry.com; ICC: www.iccsafe.org

ALPINE AN ITW COMPANY
6750 Forum Drive
Suite 305
Orlando FL, 32821

SEQN: 65889 SPEC FROM: RNB	Ply: 1 Qty: 1	**Job Number:** b51385aa -terrell floor plan Trademark Const Group **Truss Label:** S2	Cust: R 857 JRef:1WYP8570001 T8 DrwNo: 259.20.1003.43473 SSB / DF 09/15/2020

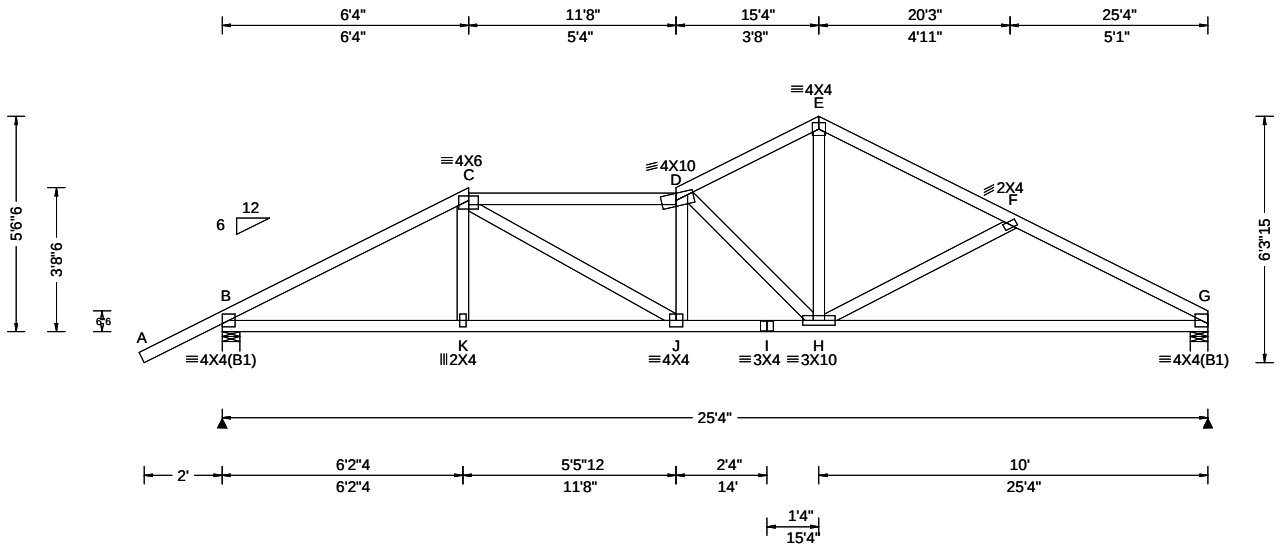

Loading Criteria (psf)

TCLL: 20.00
TCDL: 7.00
BCLL: 0.00
BCDL: 10.00
Des Ld: 37.00
NCBCLL: 10.00
Soffit: 2.00
Load Duration: 1.25
Spacing: 24.0 "

Wind Criteria

Wind Std: ASCE 7-10
Speed: 130 mph
Enclosure: Closed
Risk Category: II
EXP: B Kzt: NA
Mean Height: 15.00 ft
TCDL: 0.0 psf
BCDL: 0.0 psf
MWFRS Parallel Dist: h to 2h
C&C Dist a: 3.00 ft
Loc. from endwall: not in 9.00 ft
GCpi: 0.18
Wind Duration: 1.60

Snow Criteria (Pg,Pf in PSF)

Pg: NA Ct: NA CAT: NA
Pf: NA Ce: NA
Lu: NA Cs: NA
Snow Duration: NA

Building Code:
FBC 2017 RES
TPI Std: 2014
Rep Fac: Yes
FT/RT:20(0)/0(0)
Plate Type(s):
WAVE

Defl/CSI Criteria

PP Deflection in	loc	L/defl	L/#
VERT(LL): 0.097	D	999	360
VERT(CL): 0.180	D	999	240
HORZ(LL): 0.032	H	-	-
HORZ(TL): 0.060	H	-	-

Creep Factor: 2.0
Max TC CSI: 0.964
Max BC CSI: 0.950
Max Web CSI: 0.427

VIEW Ver: 18.02.01A.0205.19

▲Maximum Reactions (lbs)

	Gravity			Non-Gravity		
Loc	R+	/ R-	/ Rh	/ Rw	/ U	/ RL
B	1088	/-	/-	/568	/253	/110
G	953	/-	/-	/489	/207	/-

Wind reactions based on MWFRS
B Brg Width = 5.5 Min Req = 1.5
G Brg Width = 5.5 Min Req = 1.5
Bearings B & G Fcperp = 425psi.
Members not listed have forces less than 375#

Maximum Top Chord Forces Per Ply (lbs)

Chords	Tens.	Comp.	Chords	Tens.	Comp.
B - C	729	- 1592	E - F	641	- 1314
C - D	910	- 1789	F - G	759	- 1595
D - E	656	- 1305			

Maximum Bot Chord Forces Per Ply (lbs)

Chords	Tens.	Comp.	Chords	Tens.	Comp.
B - K	1347	- 612	I - H	1789	- 814
K - J	1344	- 613	H - G	1365	- 632
J - I	1789	- 814			

Maximum Web Forces Per Ply (lbs)

Webs	Tens.	Comp.	Webs	Tens.	Comp.
C - J	525	- 292	E - H	892	- 426
D - H	503	- 903			

Lumber

Top chord: 2x4 SP #1;
Bot chord: 2x4 SP #1;
Webs: 2x4 SP #3;

Plating Notes

Plates sized for a minimum of 3.50 sq.in./piece.

Purlins

In lieu of structural panels or rigid ceiling use purlins to laterally brace chords as follows:

Chord	Spacing(in oc)	Start(ft)	End(ft)
TC	51	-2.07	6.33
TC	24	6.33	11.67
TC	50	11.67	15.33
TC	56	15.33	25.23
BC	120	0.17	25.16

Apply purlins to any chords above or below fillers at 24" OC unless shown otherwise above.

Wind

Wind loads based on MWFRS with additional C&C member design.

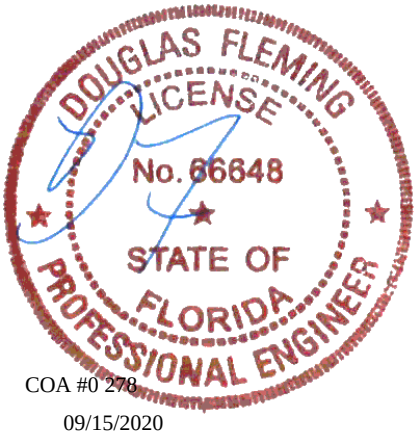

COA #0 278

09/15/2020

****WARNING**** READ AND FOLLOW ALL NOTES ON THIS DRAWING!
****IMPORTANT**** FURNISH THIS DRAWING TO ALL CONTRACTORS INCLUDING THE INSTALLERS

Trusses require extreme care in fabricating, handling, shipping, installing and bracing. Refer to and follow the latest edition of BCSI (Building Component Safety Information, by TPI and SBCA) for safety practices prior to performing these functions. Installers shall provide temporary bracing per BCSI. Unless noted otherwise, top chord shall have properly attached structural sheathing and bottom chord shall have a properly attached rigid ceiling. Locations shown for permanent lateral restraint of webs shall have bracing installed per BCSI sections B3, B7, or B10, as applicable. Apply plates to each face of truss and position as shown above and on the Joint Details, unless noted otherwise. Refer to drawings 160A-Z for standard plate positions. Refer to job's General Notes page for additional information.

Alpine, a division of ITW Building Components Group Inc. shall not be responsible for any deviation from this drawing, any failure to build the truss in conformance with ANSI/TPI 1, or for handling, shipping, installation and bracing of trusses. A seal on this drawing or cover page listing this drawing, indicates acceptance of professional engineering responsibility solely for the design shown. The suitability and use of this drawing for any structure is the responsibility of the Building Designer per ANSI/TPI 1 Sec.2.

For more information see these web sites: Alpine: www.alpineitw.com; TPI: www.tpinst.org; SBCA: www.sbcindustry.com; ICC: www.iccsafe.org

ALPINE AN ITW COMPANY
6750 Forum Drive
Suite 305
Orlando FL, 32821

SEQN: 65890 SPEC	Ply: 1	**Job Number:** b51385aa	Cust: R 857 JRef:1WYP8570001 T9
FROM: RNB	Qty: 1	-terrell floor plan Trademark Const Group	DrwNo: 259.20.1003.44933
		Truss Label: S3	SSB / DF 09/15/2020

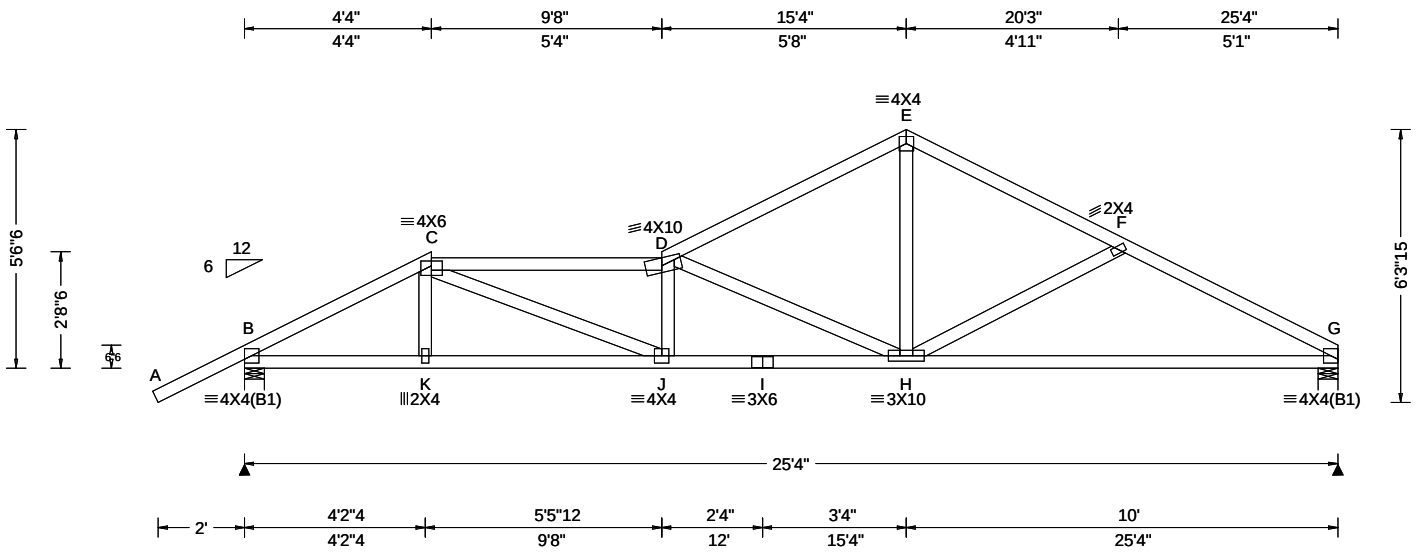

Loading Criteria (psf)

TCLL: 20.00
TCDL: 7.00
BCLL: 0.00
BCDL: 10.00
Des Ld: 37.00
NCBCLL: 10.00
Soffit: 2.00
Load Duration: 1.25
Spacing: 24.0 "

Wind Criteria

Wind Std: ASCE 7-10
Speed: 130 mph
Enclosure: Closed
Risk Category: II
EXP: B Kzt: NA
Mean Height: 15.00 ft
TCDL: 0.0 psf
BCDL: 0.0 psf
MWFRS Parallel Dist: h to 2h
C&C Dist a: 3.00 ft
Loc. from endwall: not in 9.00 ft
GCpi: 0.18
Wind Duration: 1.60

Snow Criteria (Pg,Pf in PSF)

Pg: NA Ct: NA CAT: NA
Pf: NA Ce: NA
Lu: NA Cs: NA
Snow Duration: NA

Building Code:
FBC 2017 RES
TPI Std: 2014
Rep Fac: Yes
FT/RT:20(0)/0(0)
Plate Type(s):
WAVE

Defl/CSI Criteria

PP Deflection in	loc	L/defl	L/#
VERT(LL): 0.140	D	999	360
VERT(CL): 0.261	D	999	240
HORZ(LL): 0.035	H	-	-
HORZ(TL): 0.065	H	-	-

Creep Factor: 2.0
Max TC CSI: 0.970
Max BC CSI: 0.980
Max Web CSI: 0.987

VIEW Ver: 18.02.01A.0205.19

▲Maximum Reactions (lbs)

Loc	Gravity R+	/ R-	/ Rh	Non-Gravity / Rw	/ U	/ RL
B	1088	/-	/-	/564	/252	/110
G	953	/-	/-	/486	/201	/-

Wind reactions based on MWFRS
B Brg Width = 5.5 Min Req = 1.5
G Brg Width = 5.5 Min Req = 1.5
Bearings B & G Fcperp = 425psi.
Members not listed have forces less than 375#

Maximum Top Chord Forces Per Ply (lbs)

Chords	Tens.	Comp.	Chords	Tens.	Comp.
B - C	749	-1636	E - F	633	-1321
C - D	1188	-2440	F - G	745	-1593
D - E	638	-1340			

Maximum Bot Chord Forces Per Ply (lbs)

Chords	Tens.	Comp.	Chords	Tens.	Comp.
B - K	1401	-639	I - H	2440	-1123
K - J	1399	-641	H - G	1362	-618
J - I	2440	-1123			

Maximum Web Forces Per Ply (lbs)

Webs	Tens.	Comp.	Webs	Tens.	Comp.
C - J	1136	-587	E - H	830	-367
D - H	734	-1415			

Lumber

Top chord: 2x4 SP #1;
Bot chord: 2x4 SP #1;
Webs: 2x4 SP #3;

Plating Notes

Plates sized for a minimum of 3.50 sq.in./piece.

Purlins

In lieu of structural panels or rigid ceiling use purlins to laterally brace chords as follows:

Chord	Spacing(in oc)	Start(ft)	End(ft)
TC	51	-2.07	4.33
TC	24	4.33	9.67
TC	63	9.67	15.33
TC	56	15.33	25.23
BC	111	0.17	25.16

Apply purlins to any chords above or below fillers at 24" OC unless shown otherwise above.

Wind

Wind loads based on MWFRS with additional C&C member design.

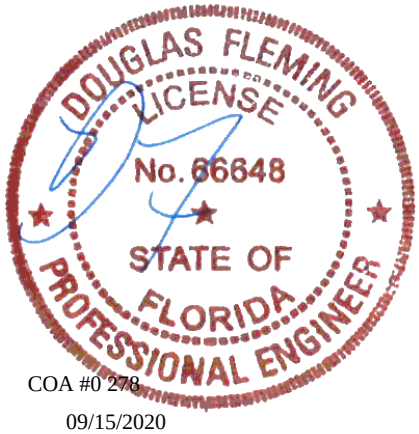

COA #0 278

09/15/2020

****WARNING**** READ AND FOLLOW ALL NOTES ON THIS DRAWING!
****IMPORTANT**** FURNISH THIS DRAWING TO ALL CONTRACTORS INCLUDING THE INSTALLERS

Trusses require extreme care in fabricating, handling, shipping, installing and bracing. Refer to and follow the latest edition of BCSI (Building Component Safety Information, by TPI and SBCA) for safety practices prior to performing these functions. Installers shall provide temporary bracing per BCSI. Unless noted otherwise, top chord shall have properly attached structural sheathing and bottom chord shall have a properly attached rigid ceiling. Locations shown for permanent lateral restraint of webs shall have bracing installed per BCSI sections B3, B7, or B10, as applicable. Apply plates to each face of truss and position as shown above and on the Joint Details, unless noted otherwise. Refer to drawings 160A-Z for standard plate positions. Refer to job's General Notes page for additional information.

Alpine, a division of ITW Building Components Group Inc. shall not be responsible for any deviation from this drawing, any failure to build the truss in conformance with ANSI/TPI 1, or for handling, shipping, installation and bracing of trusses. A seal on this drawing or cover page listing this drawing, indicates acceptance of professional engineering responsibility solely for the design shown. The suitability and use of this drawing for any structure is the responsibility of the Building Designer per ANSI/TPI 1 Sec.2.

For more information see these web sites: Alpine: www.alpineitw.com; TPI: www.tpinst.org; SBCA: www.sbcindustry.com; ICC: www.iccsafe.org

ALPINE AN ITW COMPANY
6750 Forum Drive
Suite 305
Orlando FL, 32821

SEQN: 65941 SPEC	Ply: 1	**Job Number:** b51385aa	Cust: R 857 JRef:1WYP8570001 T53
FROM: RNB	Qty: 1	-terrell floor plan Trademark Const Group	DrwNo: 259.20.1003.47010
		Truss Label: SG1	SSB / DF 09/15/2020

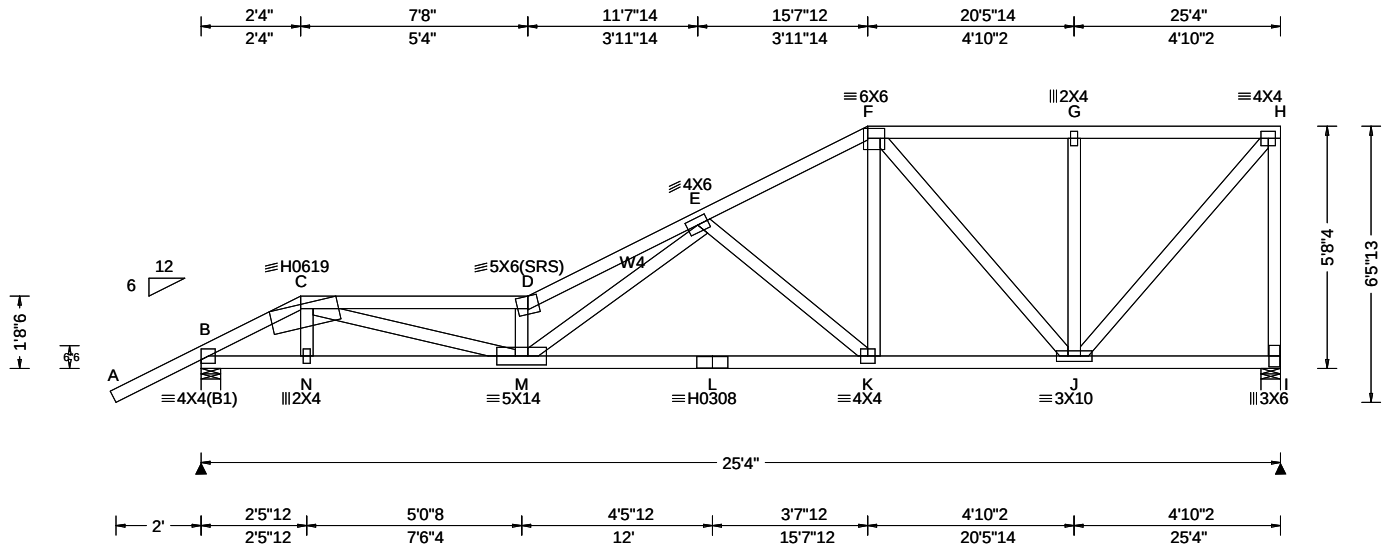

Loading Criteria (psf)

TCLL: 20.00
TCDL: 7.00
BCLL: 0.00
BCDL: 10.00
Des Ld: 37.00
NCBCLL: 10.00
Soffit: 2.00
Load Duration: 1.25
Spacing: 24.0 "

Wind Criteria

Wind Std: ASCE 7-10
Speed: 130 mph
Enclosure: Closed
Risk Category: II
EXP: B Kzt: NA
Mean Height: 15.00 ft
TCDL: 0.0 psf
BCDL: 0.0 psf
MWFRS Parallel Dist: 0 to h/2
C&C Dist a: 3.00 ft
Loc. from endwall: Any
GCpi: 0.18
Wind Duration: 1.60

Snow Criteria (Pg,Pf in PSF)

Pg: NA Ct: NA CAT: NA
Pf: NA Ce: NA
Lu: NA Cs: NA
Snow Duration: NA

Building Code:
FBC 2017 RES
TPI Std: 2014
Rep Fac: Varies by Ld Case
FT/RT:20(0)/0(0)
Plate Type(s):
WAVE, HS

Defl/CSI Criteria

PP Deflection in	loc	L/defl	L/#
VERT(LL): 0.257	D	999	360
VERT(CL): 0.478	D	633	240
HORZ(LL): -0.053	H	-	-
HORZ(TL): 0.099	H	-	-

Creep Factor: 2.0
Max TC CSI: 0.999
Max BC CSI: 0.964
Max Web CSI: 0.839

VIEW Ver: 18.02.01A.0205.19

▲Maximum Reactions (lbs)

Loc	Gravity R+	/ R-	/ Rh	Non-Gravity / Rw	/ U	/ RL
B	1182	/-	/-	/-	/418	/77
I	960	/-	/-	/-	/299	/-

Wind reactions based on MWFRS
B Brg Width = 5.5 Min Req = 1.5
I Brg Width = 5.5 Min Req = 1.5
Bearings B & I Fcperp = 425psi.
Members not listed have forces less than 375#

Maximum Top Chord Forces Per Ply (lbs)

Chords	Tens.	Comp.	Chords	Tens.	Comp.
B - C	623	- 1748	E - F	442	- 1284
C - D	1217	- 3624	F - G	265	- 727
D - E	1464	- 4332	G - H	265	- 727

Maximum Bot Chord Forces Per Ply (lbs)

Chords	Tens.	Comp.	Chords	Tens.	Comp.
B - N	1490	- 454	L - K	1801	- 544
N - M	1498	- 453	K - J	1099	- 297
M - L	1801	- 544			

Maximum Web Forces Per Ply (lbs)

Webs	Tens.	Comp.	Webs	Tens.	Comp.
C - M	2202	- 712	F - K	740	- 211
M - D	752	- 2137	F - J	164	- 557
M - E	2649	- 873	J - H	1088	- 339
E - K	320	- 911	H - I	298	- 916

Lumber

Top chord: 2x4 SP #1;
Bot chord: 2x4 SP #1;
Webs: 2x4 SP #3; W4 2x4 SP #1;

Special Loads

------(Lumber Dur.Fac.=1.25 / Plate Dur.Fac.=1.25)

TC: From	56 plf at	-2.13 to	56 plf at	2.33
TC: From	28 plf at	2.33 to	28 plf at	4.40
TC: From	56 plf at	4.40 to	56 plf at	25.33
BC: From	4 plf at	-2.13 to	4 plf at	0.00
BC: From	20 plf at	0.00 to	20 plf at	2.36
BC: From	10 plf at	2.36 to	10 plf at	4.40
BC: From	20 plf at	4.40 to	20 plf at	25.33

TC: 34 lb Conc. Load at 2.36
TC: 13 lb Conc. Load at 4.40
BC: 92 lb Conc. Load at 2.36
BC: 39 lb Conc. Load at 4.40

Plating Notes

Plates sized for a minimum of 3.50 sq.in./piece.

Purlins

In lieu of structural panels or rigid ceiling use purlins to laterally brace chords as follows:

Chord	Spacing(in oc)	Start(ft)	End(ft)
TC	44	-2.07	2.33
TC	24	2.33	7.67
TC	32	7.67	15.65
TC	24	15.65	25.33
BC	99	0.17	25.33

Apply purlins to any chords above or below fillers at 24" OC unless shown otherwise above.

Wind

Wind loads and reactions based on MWFRS.

Right end vertical exposed to wind pressure.
Deflection meets L/180.

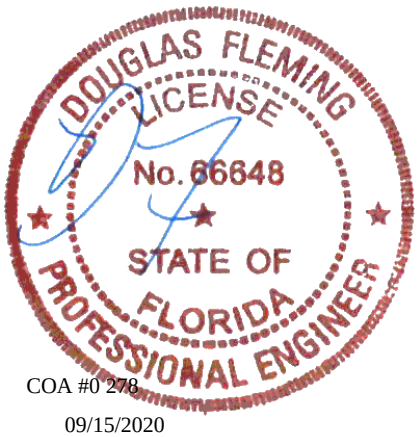

COA #0 278

09/15/2020

****WARNING**** READ AND FOLLOW ALL NOTES ON THIS DRAWING!
****IMPORTANT**** FURNISH THIS DRAWING TO ALL CONTRACTORS INCLUDING THE INSTALLERS

Trusses require extreme care in fabricating, handling, shipping, installing and bracing. Refer to and follow the latest edition of BCSI (Building Component Safety Information, by TPI and SBCA) for safety practices prior to performing these functions. Installers shall provide temporary bracing per BCSI. Unless noted otherwise, top chord shall have properly attached structural sheathing and bottom chord shall have a properly attached rigid ceiling. Locations shown for permanent lateral restraint of webs shall have bracing installed per BCSI sections B3, B7, or B10, as applicable. Apply plates to each face of truss and position as shown above and on the Joint Details, unless noted otherwise. Refer to drawings 160A-Z for standard plate positions. Refer to job's General Notes page for additional information.

Alpine, a division of ITW Building Components Group Inc. shall not be responsible for any deviation from this drawing, any failure to build the truss in conformance with ANSI/TPI 1, or for handling, shipping, installation and bracing of trusses. A seal on this drawing or cover page listing this drawing, indicates acceptance of professional engineering responsibility solely for the design shown. The suitability and use of this drawing for any structure is the responsibility of the Building Designer per ANSI/TPI 1 Sec.2.

For more information see these web sites: Alpine: www.alpineitw.com; TPI: www.tpinst.org; SBCA: www.sbcindustry.com; ICC: www.iccsafe.org

ALPINE AN ITW COMPANY
6750 Forum Drive
Suite 305
Orlando FL, 32821

SEQN: 65942 SPEC FROM: RNB	Ply: 1 Qty: 1	**Job Number:** b51385aa -terrell floor plan Trademark Const Group **Truss Label:** SG2	Cust: R 857 JRef:1WYP8570001 T18 DrwNo: 259.20.1003.49310 SSB / DF 09/15/2020

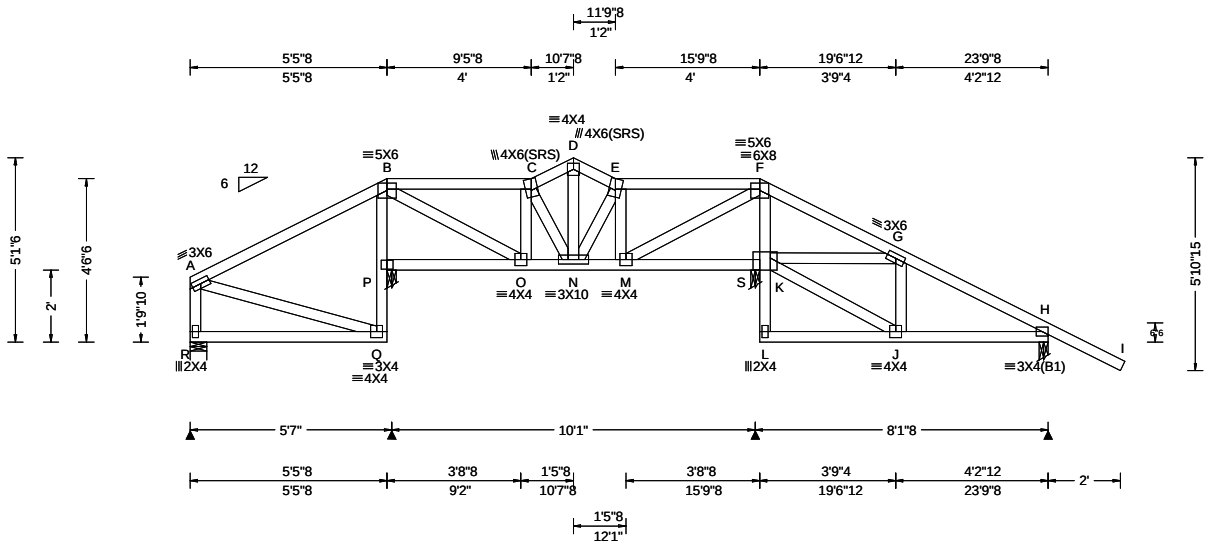

Loading Criteria (psf)

TCLL: 20.00
TCDL: 7.00
BCLL: 0.00
BCDL: 10.00
Des Ld: 37.00
NCBCLL: 10.00
Soffit: 2.00
Load Duration: 1.25
Spacing: 24.0 "

Wind Criteria

Wind Std: ASCE 7-10
Speed: 130 mph
Enclosure: Closed
Risk Category: II
EXP: B Kzt: NA
Mean Height: 15.00 ft
TCDL: 0.0 psf
BCDL: 0.0 psf
MWFRS Parallel Dist: 0 to h/2
C&C Dist a: 3.00 ft
Loc. from endwall: Any
GCpi: 0.18
Wind Duration: 1.60

Snow Criteria (Pg,Pf in PSF)

Pg: NA Ct: NA CAT: NA
Pf: NA Ce: NA
Lu: NA Cs: NA
Snow Duration: NA

Building Code:
FBC 2017 RES
TPI Std: 2014
Rep Fac: Varies by Ld Case
FT/RT:20(0)/0(0)
Plate Type(s):
WAVE

Defl/CSI Criteria

PP Deflection in	loc	L/defl	L/#
VERT(LL): 0.009	E	999	360
VERT(CL): 0.018	E	999	240
HORZ(LL): -0.004	J	-	-
HORZ(TL): 0.007	J	-	-

Creep Factor: 2.0
Max TC CSI: 0.326
Max BC CSI: 0.215
Max Web CSI: 0.223

VIEW Ver: 18.02.01A.0205.19

▲Maximum Reactions (lbs)

	Gravity			Non-Gravity		
Loc	R+	/ R-	/ Rh	/ Rw	/ U	/ RL
R	184	/-	/-	/-	/53	/-
P	1147	/-	/-	/-	/360	/-
S	1337	/-	/-	/-	/418	/-
H	397	/-	/-	/-	/131	/-

Wind reactions based on MWFRS
R Brg Width = 5.5 Min Req = 1.5
P Brg Width = 3.0 Min Req = 1.5
S Brg Width = 3.0 Min Req = 1.7
H Brg Width = 3.0 Min Req = 1.5
Bearings R, P, S, & H Fcperp = 425psi.
Members not listed have forces less than 375#

Maximum Top Chord Forces Per Ply (lbs)

Chords	Tens.	Comp.
B - C	106	- 389

Maximum Bot Chord Forces Per Ply (lbs)

Chords	Tens.	Comp.	Chords	Tens.	Comp.
O - N	402	- 112	N - M	377	- 100

Maximum Web Forces Per Ply (lbs)

Webs	Tens.	Comp.	Webs	Tens.	Comp.
P - B	245	- 647	M - F	585	- 173
B - O	409	- 108	F - K	277	- 768

Lumber

Top chord: 2x4 SP #1;
Bot chord: 2x4 SP #1;
Webs: 2x4 SP #3;

Special Loads

------(Lumber Dur.Fac.=1.25 / Plate Dur.Fac.=1.25)

TC: From	56 plf at	0.00 to	56 plf at	25.92
BC: From	20 plf at	0.00 to	20 plf at	23.79
BC: From	4 plf at	23.79 to	4 plf at	25.92

TC: 124 lb Conc. Load at 5.46,15.79
BC: 425 lb Conc. Load at 5.46,15.79

Plating Notes

Plates sized for a minimum of 3.50 sq.in./piece.

Purlins

In lieu of structural panels or rigid ceiling use purlins to laterally brace chords as follows:

Chord	Spacing(in oc)	Start(ft)	End(ft)
TC	73	0.00	5.46
TC	24	5.46	9.46
TC	16	9.46	10.63
TC	16	10.63	11.79
TC	24	11.79	15.79
TC	75	15.79	25.86
BC	62	0.00	5.17
BC	75	5.30	15.86
BC	75	15.94	23.62

Apply purlins to any chords above or below fillers at 24" OC unless shown otherwise above.

Wind

Wind loads and reactions based on MWFRS.

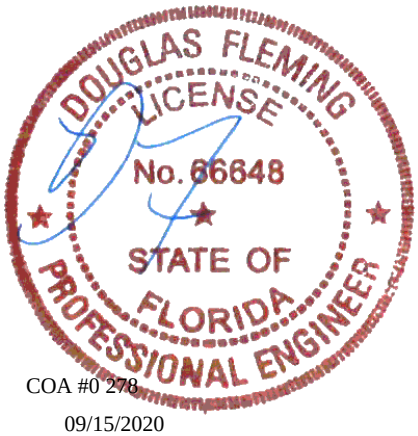

COA #0 278

09/15/2020

****WARNING**** READ AND FOLLOW ALL NOTES ON THIS DRAWING!
****IMPORTANT**** FURNISH THIS DRAWING TO ALL CONTRACTORS INCLUDING THE INSTALLERS

Trusses require extreme care in fabricating, handling, shipping, installing and bracing. Refer to and follow the latest edition of BCSI (Building Component Safety Information, by TPI and SBCA) for safety practices prior to performing these functions. Installers shall provide temporary bracing per BCSI. Unless noted otherwise, top chord shall have properly attached structural sheathing and bottom chord shall have a properly attached rigid ceiling. Locations shown for permanent lateral restraint of webs shall have bracing installed per BCSI sections B3, B7, or B10, as applicable. Apply plates to each face of truss and position as shown above and on the Joint Details, unless noted otherwise. Refer to drawings 160A-Z for standard plate positions. Refer to job's General Notes page for additional information.

Alpine, a division of ITW Building Components Group Inc. shall not be responsible for any deviation from this drawing, any failure to build the truss in conformance with ANSI/TPI 1, or for handling, shipping, installation and bracing of trusses. A seal on this drawing or cover page listing this drawing, indicates acceptance of professional engineering responsibility solely for the design shown. The suitability and use of this drawing for any structure is the responsibility of the Building Designer per ANSI/TPI 1 Sec.2.

For more information see these web sites: Alpine: www.alpineitw.com; TPI: www.tpinst.org; SBCA: www.sbcindustry.com; ICC: www.iccsafe.org

ALPINE
AN ITW COMPANY
6750 Forum Drive
Suite 305
Orlando FL, 32821

SEQN: 65955 COMN FROM: RNB	Ply: 1 Qty: 4	**Job Number:** b51385aa -terrell floor plan Trademark Const Group **Truss Label:** T-1	Cust: R 857 JRef:1WYP8570001 T4 DrwNo: 259.20.0952.08280 SSB / DF 09/15/2020

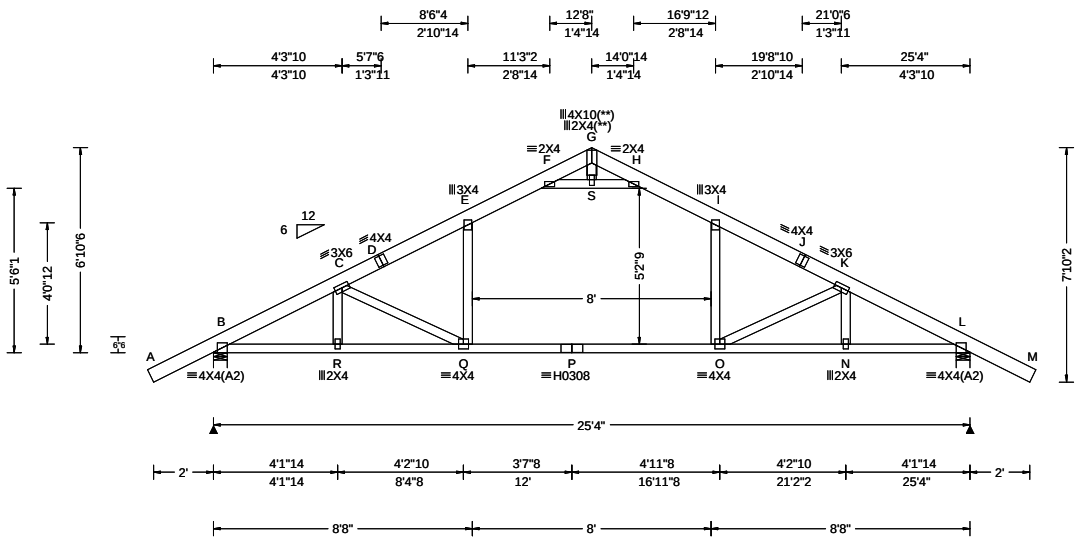

Loading Criteria (psf)

TCLL: 20.00
TCDL: 7.00
BCLL: 0.00
BCDL: 10.00
Des Ld: 37.00
NCBCLL: 10.00
Soffit: 2.00
Load Duration: 1.25
Spacing: 24.0 "

Wind Criteria

Wind Std: ASCE 7-10
Speed: 130 mph
Enclosure: Closed
Risk Category: II
EXP: B Kzt: NA
Mean Height: 15.00 ft
TCDL: 0.0 psf
BCDL: 0.0 psf
MWFRS Parallel Dist: h/2 to h
C&C Dist a: 3.00 ft
Loc. from endwall: not in 9.00 ft
GCpi: 0.18
Wind Duration: 1.60

Snow Criteria (Pg,Pf in PSF)

Pg: NA Ct: NA CAT: NA
Pf: NA Ce: NA
Lu: NA Cs: NA
Snow Duration: NA

Building Code:
FBC 2017 RES
TPI Std: 2014
Rep Fac: Yes
FT/RT:20(0)/0(0)
Plate Type(s):
WAVE, HS

Defl/CSI Criteria

PP Deflection in	loc	L/defl	L/#
VERT(LL): 0.133	Q	999	360
VERT(CL): 0.339	Q	887	240
HORZ(LL): 0.061	E	-	-
HORZ(TL): 0.159	E	-	-

Creep Factor: 2.0
Max TC CSI: 0.999
Max BC CSI: 0.984
Max Web CSI: 0.254

VIEW Ver: 18.02.01A.0205.19

▲Maximum Reactions (lbs)

	Gravity			Non-Gravity		
Loc	R+	/ R-	/ Rh	/ Rw	/ U	/ RL
B	1203	/-	/-	/580	/344	/148
L	1203	/-	/-	/580	/344	/-

Wind reactions based on MWFRS
B Brg Width = 5.5 Min Req = 1.5
L Brg Width = 5.5 Min Req = 1.5
Bearings B & L Fcperp = 425psi.
Members not listed have forces less than 375#

Maximum Top Chord Forces Per Ply (lbs)

Chords	Tens.	Comp.	Chords	Tens.	Comp.
B - C	661	- 1876	H - I	529	- 1340
C - D	562	- 1675	I - J	562	- 1646
D - E	562	- 1646	J - K	562	- 1675
E - F	529	- 1339	K - L	659	- 1876

Maximum Bot Chord Forces Per Ply (lbs)

Chords	Tens.	Comp.	Chords	Tens.	Comp.
B - R	1625	- 488	P - O	1382	- 339
R - Q	1626	- 488	O - N	1626	- 515
Q - P	1382	- 339	N - L	1625	- 515

Maximum Web Forces Per Ply (lbs)

Webs	Tens.	Comp.	Webs	Tens.	Comp.
C - Q	199	- 444	S - H	655	- 1802
Q - E	551	- 92	I - O	550	- 91
F - S	655	- 1802	O - K	198	- 444
G - S	542	- 190			

Lumber

Top chord: 2x6 SP #1;
Bot chord: 2x4 SP #1;
Webs: 2x4 SP #3;

Plating Notes

(**) 2 plate(s) require special positioning. Refer to scaled plate plot details for special positioning requirements.

Plates sized for a minimum of 3.50 sq.in./piece.

Purlins

In lieu of structural panels or rigid ceiling use purlins to laterally brace chords as follows:

Chord	Spacing(in oc)	Start(ft)	End(ft)
TC	63	-2.10	12.67
TC	64	12.67	27.44
BC	120	0.15	25.19
BC	36	11.16	14.18

Apply purlins to any chords above or below fillers at 24" OC unless shown otherwise above.

Collar-tie braced with continuous lateral bracing at 24" oc. or rigid ceiling.

Loading

Live loads applied in combination per ASCE 7 sec. 2.4.1 use 0.75 factor for multiple live loads.

BC attic loading: LL = 20.00 psf; DL = 5.00 psf; from 8-8-0 to 16-8-0.

Wind

Wind loads based on MWFRS with additional C&C member design.

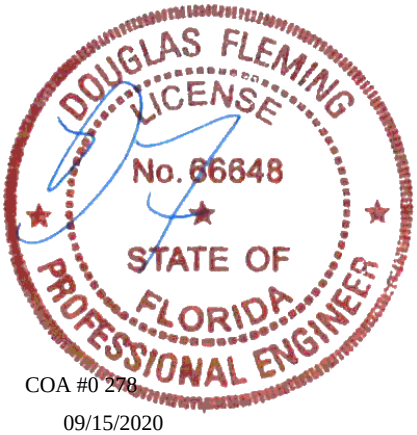

COA #0 278

09/15/2020

****WARNING**** READ AND FOLLOW ALL NOTES ON THIS DRAWING!
****IMPORTANT**** FURNISH THIS DRAWING TO ALL CONTRACTORS INCLUDING THE INSTALLERS

Trusses require extreme care in fabricating, handling, shipping, installing and bracing. Refer to and follow the latest edition of BCSI (Building Component Safety Information, by TPI and SBCA) for safety practices prior to performing these functions. Installers shall provide temporary bracing per BCSI. Unless noted otherwise, top chord shall have properly attached structural sheathing and bottom chord shall have a properly attached rigid ceiling. Locations shown for permanent lateral restraint of webs shall have bracing installed per BCSI sections B3, B7, or B10, as applicable. Apply plates to each face of truss and position as shown above and on the Joint Details, unless noted otherwise. Refer to drawings 160A-Z for standard plate positions. Refer to job's General Notes page for additional information.

Alpine, a division of ITW Building Components Group Inc. shall not be responsible for any deviation from this drawing, any failure to build the truss in conformance with ANSI/TPI 1, or for handling, shipping, installation and bracing of trusses. A seal on this drawing or cover page listing this drawing, indicates acceptance of professional engineering responsibility solely for the design shown. The suitability and use of this drawing for any structure is the responsibility of the Building Designer per ANSI/TPI 1 Sec.2.

For more information see these web sites: Alpine: www.alpineitw.com; TPI: www.tpinst.org; SBCA: www.sbcindustry.com; ICC: www.iccsafe.org

ALPINE AN ITW COMPANY
6750 Forum Drive
Suite 305
Orlando FL, 32821

SEQN: 65892 COMN FROM: RNB	Ply: 1 Qty: 1	**Job Number:** b51385aa -terrell floor plan Trademark Const Group **Truss Label:** T-10	Cust: R 857 JRef:1WYP8570001 T83 DrwNo: 259.20.0952.10980 SSB / DF 09/15/2020

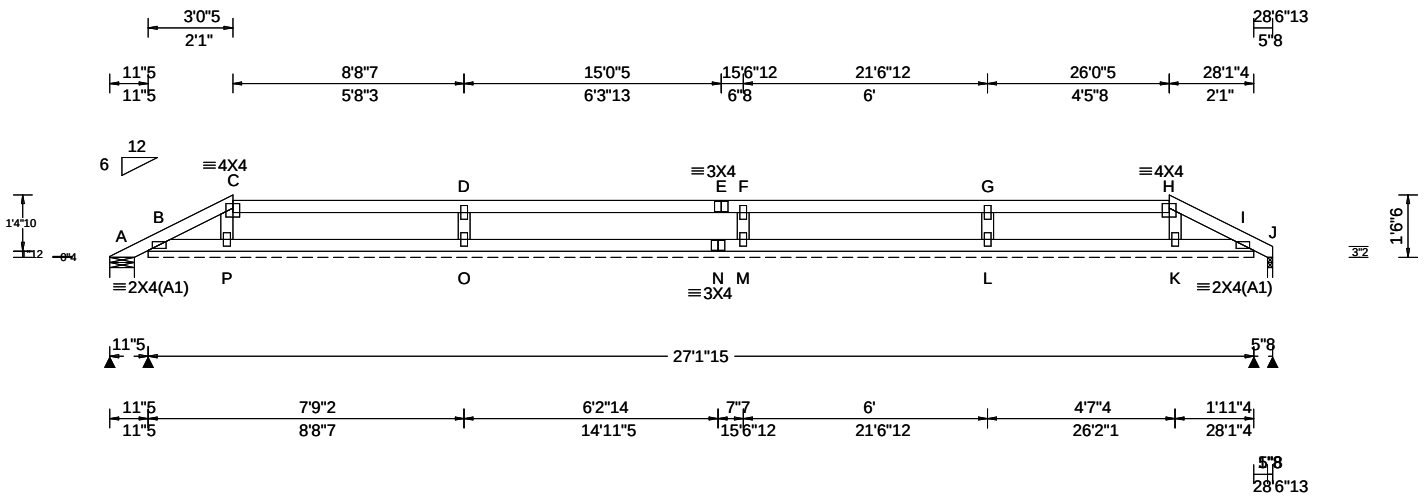

Loading Criteria (psf)	**Wind Criteria**	**Snow Criteria** (Pg,Pf in PSF)	**Defl/CSI Criteria**
TCLL: 20.00 TCDL: 7.00 BCLL: 0.00 BCDL: 10.00 Des Ld: 37.00 NCBCLL: 0.00 Soffit: 2.00 Load Duration: 1.25 Spacing: 24.0 "	Wind Std: ASCE 7-10 Speed: 130 mph Enclosure: Closed Risk Category: II EXP: B Kzt: NA Mean Height: 15.00 ft TCDL: 0.0 psf BCDL: 0.0 psf MWFRS Parallel Dist: h to 2h C&C Dist a: 3.00 ft Loc. from endwall: not in 9.00 ft GCpi: 0.18 Wind Duration: 1.60	Pg: NA Ct: NA CAT: NA Pf: NA Ce: NA Lu: NA Cs: NA Snow Duration: NA Building Code: FBC 2017 RES TPI Std: 2014 Rep Fac: Yes FT/RT:20(0)/0(0) Plate Type(s): WAVE	PP Deflection in loc L/defl L/# VERT(LL): 0.000 D 999 360 VERT(CL): 0.001 D 999 240 HORZ(LL): 0.001 K - - HORZ(TL): 0.001 K - - Creep Factor: 2.0 Max TC CSI: 0.338 Max BC CSI: 0.104 Max Web CSI: 0.073 VIEW Ver: 18.02.01A.0205.19

▲Maximum Reactions (lbs), or *=PLF

	Gravity			Non-Gravity		
Loc	R+	/ R-	/ Rh	/ Rw	/ U	/ RL
A	17	/-	/-	/13	/10	/24
B*	78	/-	/-	/36	/23	/-
J	5	/-1	/-	/3	/1	/-
P		/-121				
O		/-242				
M		/-214				
L		/-197				
K		/-102				

Wind reactions based on MWFRS

A	Brg Width = 7.3	Min Req = 1.5
B	Brg Width = 325	Min Req = -
J	Brg Width = 1.5	Min Req = 1.5

Bearings A, B, & J are a rigid surface.
Members not listed have forces less than 375#

Maximum Web Forces Per Ply (lbs)

Webs	Tens.	Comp.
D - O	243	-403

Lumber

Top chord: 2x4 SP #1;
Bot chord: 2x4 SP #1;
Webs: 2x4 SP #3;

Plating Notes

All plates are 2X4 except as noted.

Plates sized for a minimum of 3.50 sq.in./piece.

Purlins

In lieu of structural panels or rigid ceiling use purlins to laterally brace chords as follows:

Chord	Spacing(in oc)	Start(ft)	End(ft)
TC	36	-0.66	2.08
TC	24	2.08	25.08
TC	34	25.08	27.62
BC	75	0.15	27.02

Apply purlins to any chords above or below fillers at 24" OC unless shown otherwise above.

Wind

Wind loads based on MWFRS with additional C&C member design.

Additional Notes

Refer to DWG PB160101014 for piggyback details.

DOUGLAS FLEMING
LICENSE
No. 66648
STATE OF
FLORIDA
PROFESSIONAL ENGINEER

COA #0 278

09/15/2020

****WARNING**** READ AND FOLLOW ALL NOTES ON THIS DRAWING!
****IMPORTANT**** FURNISH THIS DRAWING TO ALL CONTRACTORS INCLUDING THE INSTALLERS

Trusses require extreme care in fabricating, handling, shipping, installing and bracing. Refer to and follow the latest edition of BCSI (Building Component Safety Information, by TPI and SBCA) for safety practices prior to performing these functions. Installers shall provide temporary bracing per BCSI. Unless noted otherwise, top chord shall have properly attached structural sheathing and bottom chord shall have a properly attached rigid ceiling. Locations shown for permanent lateral restraint of webs shall have bracing installed per BCSI sections B3, B7, or B10, as applicable. Apply plates to each face of truss and position as shown above and on the Joint Details, unless noted otherwise. Refer to drawings 160A-Z for standard plate positions. Refer to job's General Notes page for additional information.

Alpine, a division of ITW Building Components Group Inc. shall not be responsible for any deviation from this drawing, any failure to build the truss in conformance with ANSI/TPI 1, or for handling, shipping, installation and bracing of trusses. A seal on this drawing or cover page listing this drawing, indicates acceptance of professional engineering responsibility solely for the design shown. The suitability and use of this drawing for any structure is the responsibility of the Building Designer per ANSI/TPI 1 Sec.2.

For more information see these web sites: Alpine: www.alpineitw.com; TPI: www.tpinst.org; SBCA: www.sbcindustry.com; ICC: www.iccsafe.org

ALPINE
AN ITW COMPANY
6750 Forum Drive
Suite 305
Orlando FL, 32821

SEQN: 65893 COMN FROM: RNB	Ply: 1 Qty: 1	**Job Number:** b51385aa -terrell floor plan Trademark Const Group **Truss Label:** T-11	Cust: R 857 JRef:1WYP8570001 T66 DrwNo: 259.20.0952.12620 SSB / DF 09/15/2020

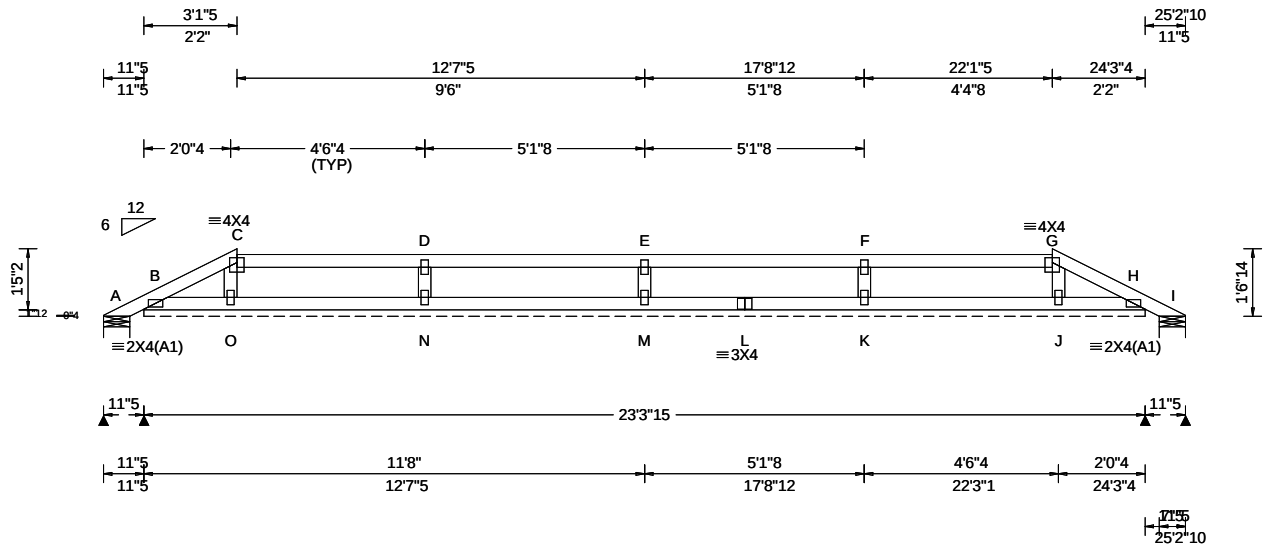

Loading Criteria (psf)

TCLL: 20.00
TCDL: 7.00
BCLL: 0.00
BCDL: 10.00
Des Ld: 37.00
NCBCLL: 0.00
Soffit: 2.00
Load Duration: 1.25
Spacing: 24.0 "

Wind Criteria

Wind Std: ASCE 7-10
Speed: 130 mph
Enclosure: Closed
Risk Category: II
EXP: B Kzt: NA
Mean Height: 15.00 ft
TCDL: 0.0 psf
BCDL: 0.0 psf
MWFRS Parallel Dist: h to 2h
C&C Dist a: 3.00 ft
Loc. from endwall: not in 9.00 ft
GCpi: 0.18
Wind Duration: 1.60

Snow Criteria (Pg,Pf in PSF)

Pg: NA Ct: NA CAT: NA
Pf: NA Ce: NA
Lu: NA Cs: NA
Snow Duration: NA

Building Code:
FBC 2017 RES
TPI Std: 2014
Rep Fac: Yes
FT/RT:20(0)/0(0)
Plate Type(s):
WAVE

Defl/CSI Criteria

PP Deflection in	loc	L/defl	L/#
VERT(LL): 0.000	O	999	360
VERT(CL): 0.001	O	999	240
HORZ(LL): 0.001	J	-	-
HORZ(TL): 0.001	J	-	-

Creep Factor: 2.0
Max TC CSI: 0.196
Max BC CSI: 0.068
Max Web CSI: 0.056

VIEW Ver: 18.02.01A.0205.19

▲Maximum Reactions (lbs), or *=PLF

	Gravity			Non-Gravity		
Loc	R+	/ R-	/ Rh	/ Rw	/ U	/ RL
A	14	/-	/-	/12	/11	/24
B*	79	/-	/-	/36	/23	/-
I	15	/-	/-	/4	/2	/-
O		/-101				
N		/-184				
M		/-167				
K		/-184				
J		/-101				

Wind reactions based on MWFRS
A Brg Width = 7.3 Min Req = 1.5
B Brg Width = 279 Min Req = -
I Brg Width = 7.3 Min Req = 1.5
Bearings A, B, & I are a rigid surface.
Members not listed have forces less than 375#

Lumber

Top chord: 2x4 SP #1;
Bot chord: 2x4 SP #1;
Webs: 2x4 SP #3;

Plating Notes

All plates are 2X4 except as noted.

Plates sized for a minimum of 3.50 sq.in./piece.

Purlins

In lieu of structural panels or rigid ceiling use purlins to laterally brace chords as follows:

Chord	Spacing(in oc)	Start(ft)	End(ft)
TC	38	-0.66	2.16
TC	24	2.16	21.16
TC	38	21.16	23.99
BC	75	0.15	23.18

Apply purlins to any chords above or below fillers at 24" OC unless shown otherwise above.

Wind

Wind loads based on MWFRS with additional C&C member design.

Additional Notes

Refer to DWG PB160101014 for piggyback details.

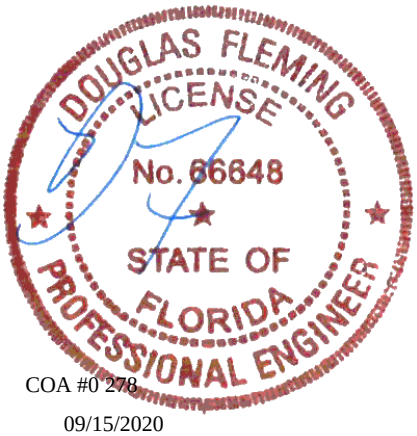

COA #0 278

09/15/2020

****WARNING**** READ AND FOLLOW ALL NOTES ON THIS DRAWING!
****IMPORTANT**** FURNISH THIS DRAWING TO ALL CONTRACTORS INCLUDING THE INSTALLERS

Trusses require extreme care in fabricating, handling, shipping, installing and bracing. Refer to and follow the latest edition of BCSI (Building Component Safety Information, by TPI and SBCA) for safety practices prior to performing these functions. Installers shall provide temporary bracing per BCSI. Unless noted otherwise, top chord shall have properly attached structural sheathing and bottom chord shall have a properly attached rigid ceiling. Locations shown for permanent lateral restraint of webs shall have bracing installed per BCSI sections B3, B7, or B10, as applicable. Apply plates to each face of truss and position as shown above and on the Joint Details, unless noted otherwise. Refer to drawings 160A-Z for standard plate positions. Refer to job's General Notes page for additional information.

Alpine, a division of ITW Building Components Group Inc. shall not be responsible for any deviation from this drawing, any failure to build the truss in conformance with ANSI/TPI 1, or for handling, shipping, installation and bracing of trusses. A seal on this drawing or cover page listing this drawing, indicates acceptance of professional engineering responsibility solely for the design shown. The suitability and use of this drawing for any structure is the responsibility of the Building Designer per ANSI/TPI 1 Sec.2.

For more information see these web sites: Alpine: www.alpineitw.com; TPI: www.tpinst.org; SBCA: www.sbcindustry.com; ICC: www.iccsafe.org

ALPINE AN ITW COMPANY
6750 Forum Drive
Suite 305
Orlando FL, 32821

SEQN: 65894 COMN FROM: RNB	Ply: 1 Qty: 1	**Job Number:** b51385aa -terrell floor plan Trademark Const Group **Truss Label:** T-12	Cust: R 857 JRef:1WYP8570001 T40 DrwNo: 259.20.0952.14173 SSB / DF 09/15/2020

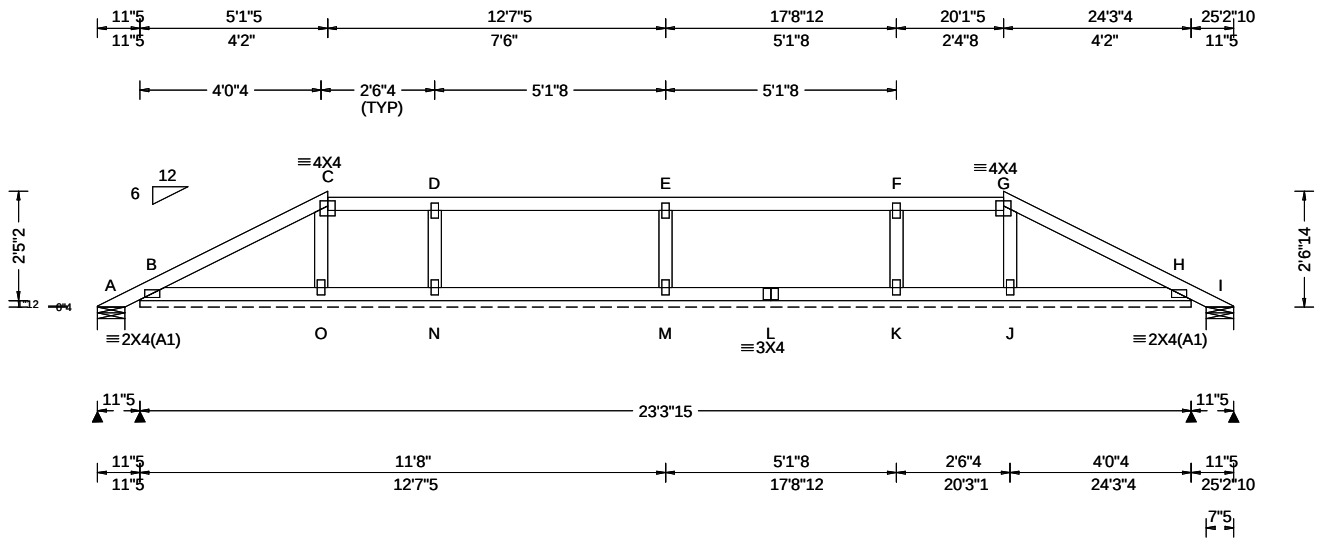

Loading Criteria (psf)

TCLL: 20.00
TCDL: 7.00
BCLL: 0.00
BCDL: 10.00
Des Ld: 37.00
NCBCLL: 0.00
Soffit: 2.00
Load Duration: 1.25
Spacing: 24.0 "

Wind Criteria

Wind Std: ASCE 7-10
Speed: 130 mph
Enclosure: Closed
Risk Category: II
EXP: B Kzt: NA
Mean Height: 15.00 ft
TCDL: 0.0 psf
BCDL: 0.0 psf
MWFRS Parallel Dist: h to 2h
C&C Dist a: 3.00 ft
Loc. from endwall: not in 9.00 ft
GCpi: 0.18
Wind Duration: 1.60

Snow Criteria (Pg,Pf in PSF)

Pg: NA Ct: NA CAT: NA
Pf: NA Ce: NA
Lu: NA Cs: NA
Snow Duration: NA

Building Code:
FBC 2017 RES
TPI Std: 2014
Rep Fac: Yes
FT/RT:20(0)/0(0)
Plate Type(s):
WAVE

Defl/CSI Criteria

PP Deflection in	loc	L/defl	L/#
VERT(LL): 0.002	O	999	360
VERT(CL): 0.003	O	999	240
HORZ(LL): 0.001	J	-	-
HORZ(TL): 0.002	J	-	-

Creep Factor: 2.0
Max TC CSI: 0.196
Max BC CSI: 0.055
Max Web CSI: 0.059

VIEW Ver: 18.02.01A.0205.19

▲Maximum Reactions (lbs), or *=PLF

	Gravity			Non-Gravity		
Loc	R+	/ R-	/ Rh	/ Rw	/ U	/ RL
A	-	/-58	/-	/42	/61	/42
B*	68	/-	/-	/39	/23	/-
I	-	/-58	/-	/23	/42	/-
N		/-100				
M		/-130				
K		/-99				

Wind reactions based on MWFRS
A Brg Width = 7.3 Min Req = 1.5
B Brg Width = 279 Min Req = -
I Brg Width = 7.3 Min Req = 1.5
Bearings A, B, & I are a rigid surface.
Members not listed have forces less than 375#

Lumber

Top chord: 2x4 SP #1;
Bot chord: 2x4 SP #1;
Webs: 2x4 SP #3;

Plating Notes

All plates are 2X4 except as noted.

Plates sized for a minimum of 3.50 sq.in./piece.

Purlins

In lieu of structural panels or rigid ceiling use purlins to laterally brace chords as follows:

Chord	Spacing(in oc)	Start(ft)	End(ft)
TC	64	-0.66	4.16
TC	24	4.16	19.16
TC	64	19.16	23.99
BC	120	0.15	23.18

Apply purlins to any chords above or below fillers at 24" OC unless shown otherwise above.

Wind

Wind loads based on MWFRS with additional C&C member design.

Additional Notes

Refer to DWG PB160101014 for piggyback details.

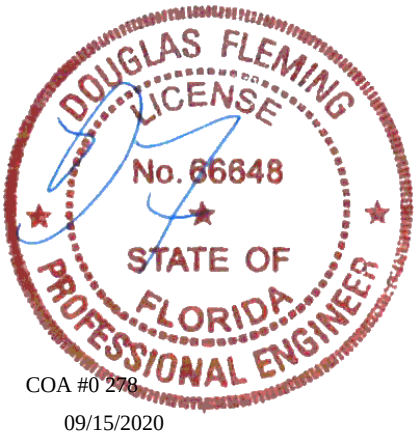

COA #0 278

09/15/2020

****WARNING**** READ AND FOLLOW ALL NOTES ON THIS DRAWING!
****IMPORTANT**** FURNISH THIS DRAWING TO ALL CONTRACTORS INCLUDING THE INSTALLERS

Trusses require extreme care in fabricating, handling, shipping, installing and bracing. Refer to and follow the latest edition of BCSI (Building Component Safety Information, by TPI and SBCA) for safety practices prior to performing these functions. Installers shall provide temporary bracing per BCSI. Unless noted otherwise, top chord shall have properly attached structural sheathing and bottom chord shall have a properly attached rigid ceiling. Locations shown for permanent lateral restraint of webs shall have bracing installed per BCSI sections B3, B7, or B10, as applicable. Apply plates to each face of truss and position as shown above and on the Joint Details, unless noted otherwise. Refer to drawings 160A-Z for standard plate positions. Refer to job's General Notes page for additional information.

Alpine, a division of ITW Building Components Group Inc. shall not be responsible for any deviation from this drawing, any failure to build the truss in conformance with ANSI/TPI 1, or for handling, shipping, installation and bracing of trusses. A seal on this drawing or cover page listing this drawing, indicates acceptance of professional engineering responsibility solely for the design shown. The suitability and use of this drawing for any structure is the responsibility of the Building Designer per ANSI/TPI 1 Sec.2.

For more information see these web sites: Alpine: www.alpineitw.com; TPI: www.tpinst.org; SBCA: www.sbcindustry.com; ICC: www.iccsafe.org

ALPINE
AN ITW COMPANY
6750 Forum Drive
Suite 305
Orlando FL, 32821

SEQN: 65895 COMN FROM: RNB	Ply: 1 Qty: 1	**Job Number:** b51385aa -terrell floor plan Trademark Const Group **Truss Label:** T-13	Cust: R 857 JRef:1WYP8570001 T57 DrwNo: 259.20.0952.16303 SSB / DF 09/15/2020

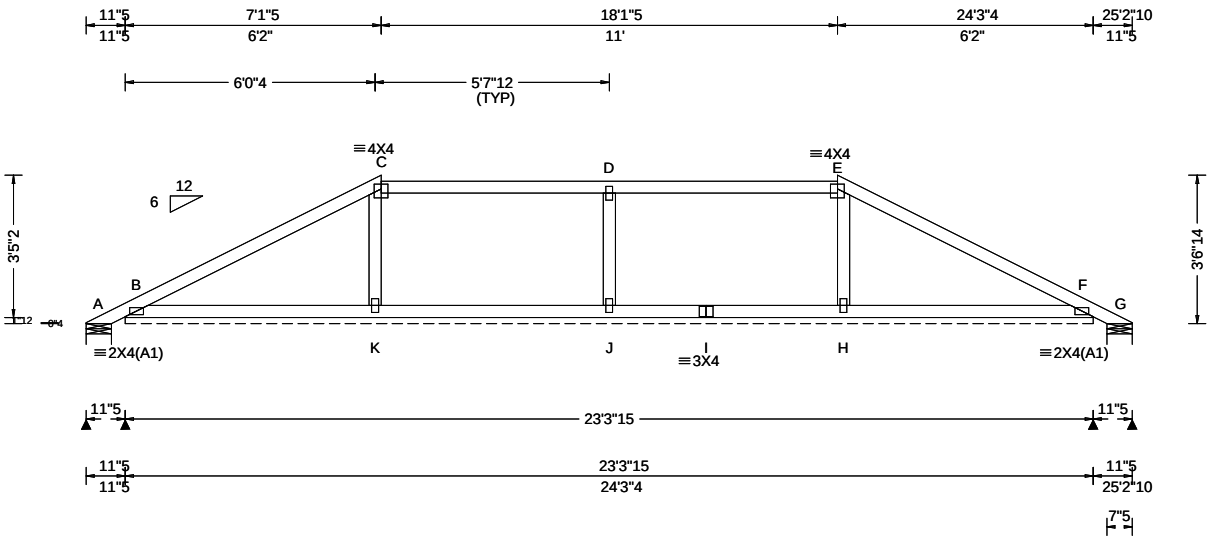

Loading Criteria (psf)

TCLL: 20.00
TCDL: 7.00
BCLL: 0.00
BCDL: 10.00
Des Ld: 37.00
NCBCLL: 0.00
Soffit: 2.00
Load Duration: 1.25
Spacing: 24.0 "

Wind Criteria

Wind Std: ASCE 7-10
Speed: 130 mph
Enclosure: Closed
Risk Category: II
EXP: B Kzt: NA
Mean Height: 15.00 ft
TCDL: 0.0 psf
BCDL: 0.0 psf
MWFRS Parallel Dist: h to 2h
C&C Dist a: 3.00 ft
Loc. from endwall: not in 9.00 ft
GCpi: 0.18
Wind Duration: 1.60

Snow Criteria (Pg,Pf in PSF)

Pg: NA Ct: NA CAT: NA
Pf: NA Ce: NA
Lu: NA Cs: NA
Snow Duration: NA

Building Code:
FBC 2017 RES
TPI Std: 2014
Rep Fac: Yes
FT/RT:20(0)/0(0)
Plate Type(s):
WAVE

Defl/CSI Criteria

PP Deflection in	loc	L/defl	L/#
VERT(LL): 0.005	K	999	360
VERT(CL): 0.008	K	999	240
HORZ(LL): -0.003	H	-	-
HORZ(TL): 0.005	H	-	-

Creep Factor: 2.0
Max TC CSI: 0.324
Max BC CSI: 0.106
Max Web CSI: 0.091

VIEW Ver: 18.02.01A.0205.19

▲Maximum Reactions (lbs), or *=PLF

	Gravity			Non-Gravity		
Loc	R+	/ R-	/ Rh	/ Rw	/ U	/ RL
A	-	/-185	/-	/99	/150	/59
B*	79	/-	/-	/45	/25	/-
G	-	/-185	/-	/72	/128	/-
J		/-164				
F		/-159				

Wind reactions based on MWFRS
A Brg Width = 7.3 Min Req = 1.5
B Brg Width = 279 Min Req = -
G Brg Width = 7.3 Min Req = 1.5
Bearings A, B, & G are a rigid surface.
Members not listed have forces less than 375#

Maximum Web Forces Per Ply (lbs)

Webs	Tens.	Comp.
D - J	238	- 382

Lumber

Top chord: 2x4 SP #1;
Bot chord: 2x4 SP #1;
Webs: 2x4 SP #3;

Plating Notes

All plates are 2X4 except as noted.

Plates sized for a minimum of 3.50 sq.in./piece.

Purlins

In lieu of structural panels or rigid ceiling use purlins to laterally brace chords as follows:

Chord	Spacing(in oc)	Start(ft)	End(ft)
TC	75	-0.66	6.16
TC	24	6.16	17.16
TC	75	17.16	23.99
BC	120	0.15	23.18

Apply purlins to any chords above or below fillers at 24" OC unless shown otherwise above.

Wind

Wind loads based on MWFRS with additional C&C member design.

Additional Notes

Negative reaction(s) of -185# MAX. from a non-wind load case requires uplift connection. See Maximum Reactions.

Refer to DWG PB160101014 for piggyback details.

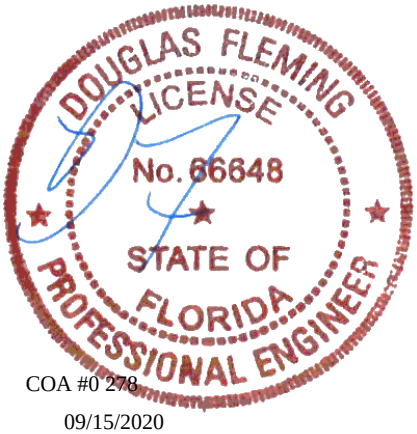

COA #0 278

09/15/2020

****WARNING**** READ AND FOLLOW ALL NOTES ON THIS DRAWING!
****IMPORTANT**** FURNISH THIS DRAWING TO ALL CONTRACTORS INCLUDING THE INSTALLERS

Trusses require extreme care in fabricating, handling, shipping, installing and bracing. Refer to and follow the latest edition of BCSI (Building Component Safety Information, by TPI and SBCA) for safety practices prior to performing these functions. Installers shall provide temporary bracing per BCSI. Unless noted otherwise, top chord shall have properly attached structural sheathing and bottom chord shall have a properly attached rigid ceiling. Locations shown for permanent lateral restraint of webs shall have bracing installed per BCSI sections B3, B7, or B10, as applicable. Apply plates to each face of truss and position as shown above and on the Joint Details, unless noted otherwise. Refer to drawings 160A-Z for standard plate positions. Refer to job's General Notes page for additional information.

Alpine, a division of ITW Building Components Group Inc. shall not be responsible for any deviation from this drawing, any failure to build the truss in conformance with ANSI/TPI 1, or for handling, shipping, installation and bracing of trusses. A seal on this drawing or cover page listing this drawing, indicates acceptance of professional engineering responsibility solely for the design shown. The suitability and use of this drawing for any structure is the responsibility of the Building Designer per ANSI/TPI 1 Sec.2.

For more information see these web sites: Alpine: www.alpineitw.com; TPI: www.tpinst.org; SBCA: www.sbcindustry.com; ICC: www.iccsafe.org

ALPINE AN ITW COMPANY
6750 Forum Drive
Suite 305
Orlando FL, 32821

SEQN: 65896 COMN FROM: RNB	Ply: 1 Qty: 1	**Job Number:** b51385aa -terrell floor plan Trademark Const Group **Truss Label:** T-14	Cust: R 857 JRef:1WYP8570001 T64 DrwNo: 259.20.0952.18300 SSB / DF 09/15/2020

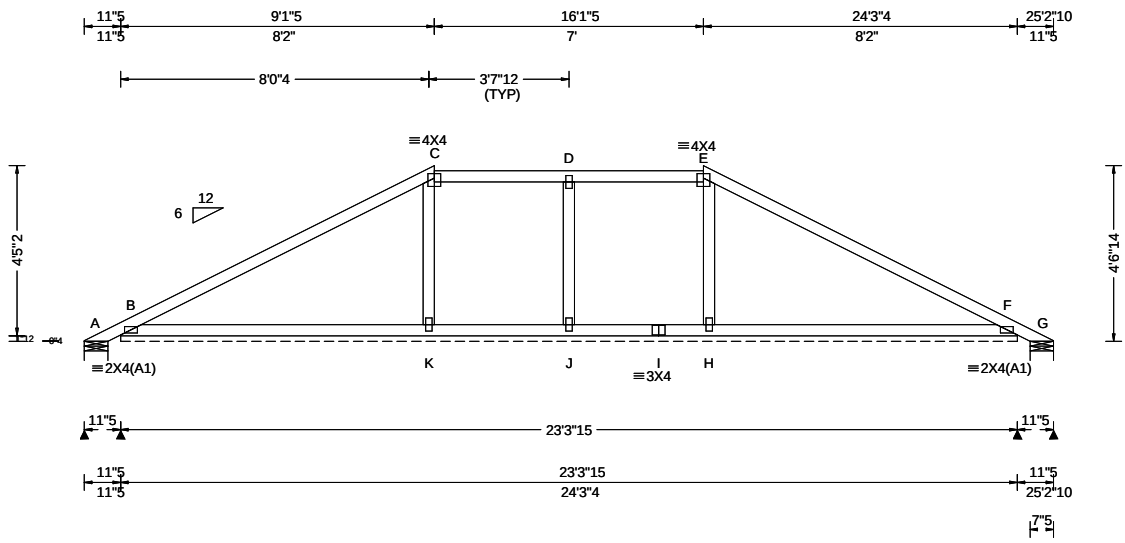

Loading Criteria (psf)

TCLL: 20.00
TCDL: 7.00
BCLL: 0.00
BCDL: 10.00
Des Ld: 37.00
NCBCLL: 0.00
Soffit: 2.00
Load Duration: 1.25
Spacing: 24.0 "

Wind Criteria

Wind Std: ASCE 7-10
Speed: 130 mph
Enclosure: Closed
Risk Category: II
EXP: B Kzt: NA
Mean Height: 15.00 ft
TCDL: 0.0 psf
BCDL: 0.0 psf
MWFRS Parallel Dist: h to 2h
C&C Dist a: 3.00 ft
Loc. from endwall: not in 9.00 ft
GCpi: 0.18
Wind Duration: 1.60

Snow Criteria (Pg,Pf in PSF)

Pg: NA Ct: NA CAT: NA
Pf: NA Ce: NA
Lu: NA Cs: NA
Snow Duration: NA

Building Code:
FBC 2017 RES
TPI Std: 2014
Rep Fac: Yes
FT/RT:20(0)/0(0)
Plate Type(s):
WAVE

Defl/CSI Criteria

PP Deflection in	loc	L/defl	L/#
VERT(LL): 0.011	K	999	360
VERT(CL): 0.016	K	999	240
HORZ(LL): -0.006	H	-	-
HORZ(TL): 0.010	H	-	-

Creep Factor: 2.0
Max TC CSI: 0.630
Max BC CSI: 0.156
Max Web CSI: 0.083

VIEW Ver: 18.02.01A.0205.19

▲Maximum Reactions (lbs), or *=PLF

	Gravity			Non-Gravity		
Loc	R+	/ R-	/ Rh	/ Rw	/ U	/ RL
A	-	/-378	/-	/180	/294	/77
B*	95	/-	/-	/54	/28	/-
G	-	/-376	/-	/146	/257	/-
B		/-156				
J		/-103				
F		/-262				

Wind reactions based on MWFRS
A Brg Width = 7.3 Min Req = 1.5
B Brg Width = 279 Min Req = -
G Brg Width = 7.3 Min Req = 1.5
Bearings A, B, & G are a rigid surface.
Members not listed have forces less than 375#

Lumber

Top chord: 2x4 SP #1;
Bot chord: 2x4 SP #1;
Webs: 2x4 SP #3;

Plating Notes

All plates are 2X4 except as noted.

Plates sized for a minimum of 3.50 sq.in./piece.

Purlins

In lieu of structural panels or rigid ceiling use purlins to laterally brace chords as follows:

Chord	Spacing(in oc)	Start(ft)	End(ft)
TC	75	-0.66	8.16
TC	24	8.16	15.16
TC	75	15.16	23.99
BC	120	0.15	23.18

Apply purlins to any chords above or below fillers at 24" OC unless shown otherwise above.

Wind

Wind loads based on MWFRS with additional C&C member design.

Additional Notes

Negative reaction(s) of -378# MAX. from a non-wind load case requires uplift connection. See Maximum Reactions.

Refer to DWG PB160101014 for piggyback details.

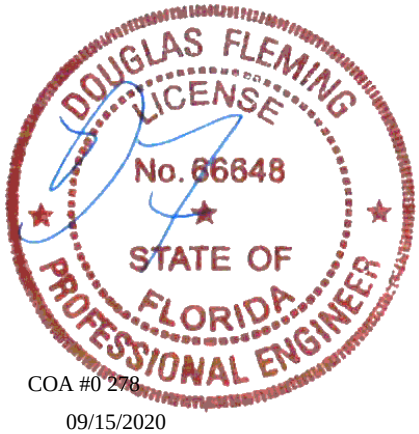

COA #0 278

09/15/2020

****WARNING**** READ AND FOLLOW ALL NOTES ON THIS DRAWING!
****IMPORTANT**** FURNISH THIS DRAWING TO ALL CONTRACTORS INCLUDING THE INSTALLERS

Trusses require extreme care in fabricating, handling, shipping, installing and bracing. Refer to and follow the latest edition of BCSI (Building Component Safety Information, by TPI and SBCA) for safety practices prior to performing these functions. Installers shall provide temporary bracing per BCSI. Unless noted otherwise, top chord shall have properly attached structural sheathing and bottom chord shall have a properly attached rigid ceiling. Locations shown for permanent lateral restraint of webs shall have bracing installed per BCSI sections B3, B7, or B10, as applicable. Apply plates to each face of truss and position as shown above and on the Joint Details, unless noted otherwise. Refer to drawings 160A-Z for standard plate positions. Refer to job's General Notes page for additional information.

Alpine, a division of ITW Building Components Group Inc. shall not be responsible for any deviation from this drawing, any failure to build the truss in conformance with ANSI/TPI 1, or for handling, shipping, installation and bracing of trusses. A seal on this drawing or cover page listing this drawing, indicates acceptance of professional engineering responsibility solely for the design shown. The suitability and use of this drawing for any structure is the responsibility of the Building Designer per ANSI/TPI 1 Sec.2.

For more information see these web sites: Alpine: www.alpineitw.com; TPI: www.tpinst.org; SBCA: www.sbcindustry.com; ICC: www.iccsafe.org

ALPINE AN ITW COMPANY
6750 Forum Drive
Suite 305
Orlando FL, 32821

SEQN: 65897 COMN FROM: RNB	Ply: 1 Qty: 1	**Job Number:** b51385aa -terrell floor plan Trademark Const Group **Truss Label:** T-15	Cust: R 857 JRef:1WYP8570001 T41 DrwNo: 259.20.0952.20370 SSB / DF 09/15/2020

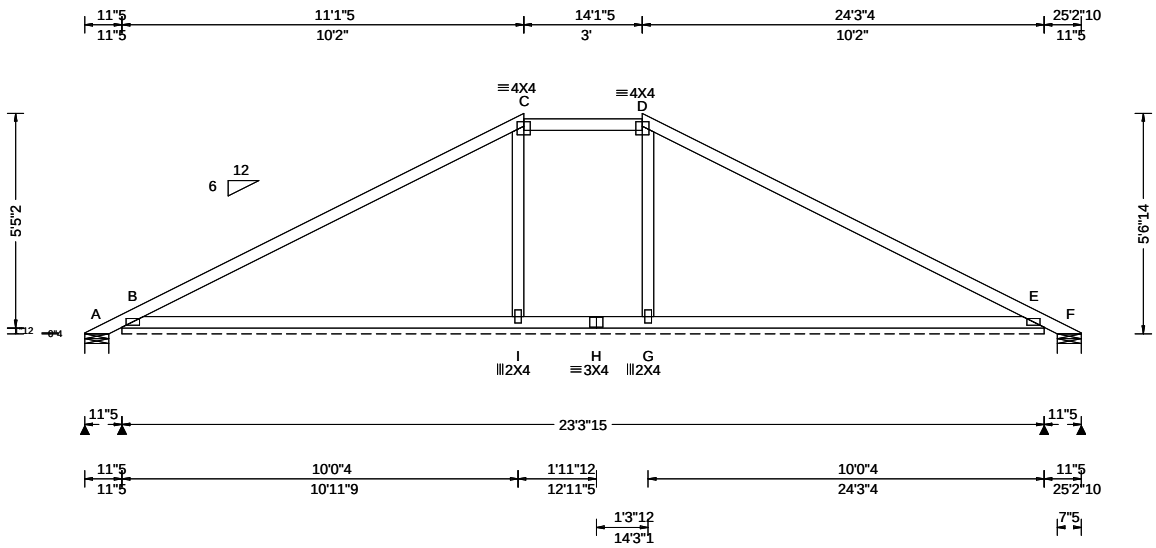

Loading Criteria (psf)

TCLL: 20.00
TCDL: 7.00
BCLL: 0.00
BCDL: 10.00
Des Ld: 37.00
NCBCLL: 0.00
Soffit: 2.00
Load Duration: 1.25
Spacing: 24.0 "

Wind Criteria

Wind Std: ASCE 7-10
Speed: 130 mph
Enclosure: Closed
Risk Category: II
EXP: B Kzt: NA
Mean Height: 15.00 ft
TCDL: 0.0 psf
BCDL: 0.0 psf
MWFRS Parallel Dist: > 2h
C&C Dist a: 3.00 ft
Loc. from endwall: not in 9.00 ft
GCpi: 0.18
Wind Duration: 1.60

Snow Criteria (Pg,Pf in PSF)

Pg: NA Ct: NA CAT: NA
Pf: NA Ce: NA
Lu: NA Cs: NA
Snow Duration: NA

Building Code:
FBC 2017 RES
TPI Std: 2014
Rep Fac: Yes
FT/RT:20(0)/0(0)
Plate Type(s):
WAVE

Defl/CSI Criteria

PP Deflection in	loc	L/defl	L/#
VERT(LL): 0.017	I	999	360
VERT(CL): 0.026	I	999	240
HORZ(LL): -0.011	G	-	-
HORZ(TL): 0.016	G	-	-

Creep Factor: 2.0
Max TC CSI: 0.997
Max BC CSI: 0.244
Max Web CSI: 0.108

VIEW Ver: 18.02.01A.0205.19

▲Maximum Reactions (lbs), or *=PLF

	Gravity			Non-Gravity		
Loc	R+	/ R-	/ Rh	/ Rw	/ U	/ RL
A	-	/-636	/-	/287	/475	/94
B*	117	/-	/-	/65	/33	/-
F	-	/-635	/-	/245	/432	/-
B		/-236				
H		/-114				
E		/-394				

Wind reactions based on MWFRS
A Brg Width = 7.3 Min Req = 1.5
B Brg Width = 279 Min Req = -
F Brg Width = 7.3 Min Req = 1.5
Bearings A, B, & F are a rigid surface.
Members not listed have forces less than 375#

Lumber

Top chord: 2x4 SP #1;
Bot chord: 2x4 SP #1;
Webs: 2x4 SP #3;

Plating Notes

All plates are 2X4(A1) except as noted.

Plates sized for a minimum of 3.50 sq.in./piece.

Purlins

In lieu of structural panels or rigid ceiling use purlins to laterally brace chords as follows:

Chord	Spacing(in oc)	Start(ft)	End(ft)
TC	65	-0.66	10.16
TC	24	10.16	13.16
TC	65	13.16	23.99
BC	120	0.15	23.18

Apply purlins to any chords above or below fillers at 24" OC unless shown otherwise above.

Wind

Wind loads based on MWFRS with additional C&C member design.

Additional Notes

Negative reaction(s) of -636# MAX. from a non-wind load case requires uplift connection. See Maximum Reactions.

Refer to DWG PB160101014 for piggyback details.

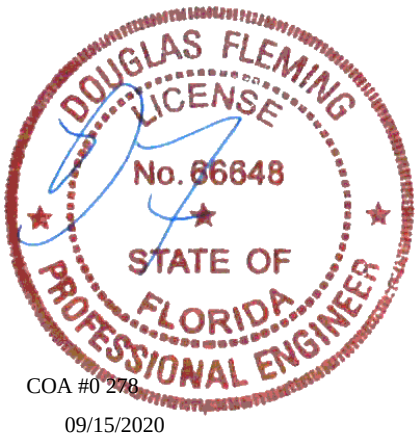

COA #0 278

09/15/2020

****WARNING**** READ AND FOLLOW ALL NOTES ON THIS DRAWING!
****IMPORTANT**** FURNISH THIS DRAWING TO ALL CONTRACTORS INCLUDING THE INSTALLERS

Trusses require extreme care in fabricating, handling, shipping, installing and bracing. Refer to and follow the latest edition of BCSI (Building Component Safety Information, by TPI and SBCA) for safety practices prior to performing these functions. Installers shall provide temporary bracing per BCSI. Unless noted otherwise, top chord shall have properly attached structural sheathing and bottom chord shall have a properly attached rigid ceiling. Locations shown for permanent lateral restraint of webs shall have bracing installed per BCSI sections B3, B7, or B10, as applicable. Apply plates to each face of truss and position as shown above and on the Joint Details, unless noted otherwise. Refer to drawings 160A-Z for standard plate positions. Refer to job's General Notes page for additional information.

Alpine, a division of ITW Building Components Group Inc. shall not be responsible for any deviation from this drawing, any failure to build the truss in conformance with ANSI/TPI 1, or for handling, shipping, installation and bracing of trusses. A seal on this drawing or cover page listing this drawing, indicates acceptance of professional engineering responsibility solely for the design shown. The suitability and use of this drawing for any structure is the responsibility of the Building Designer per ANSI/TPI 1 Sec.2.

For more information see these web sites: Alpine: www.alpineitw.com; TPI: www.tpinst.org; SBCA: www.sbcindustry.com; ICC: www.iccsafe.org

ALPINE AN ITW COMPANY
6750 Forum Drive
Suite 305
Orlando FL, 32821

SEQN: 65898 COMN	Ply: 1	**Job Number:** b51385aa	Cust: R 857 JRef:1WYP8570001 T78
FROM: RNB	Qty: 1	-terrell floor plan Trademark Const Group	DrwNo: 259.20.1003.52290
Page 1 of 2		**Truss Label:** T-16	SSB / DF 09/15/2020

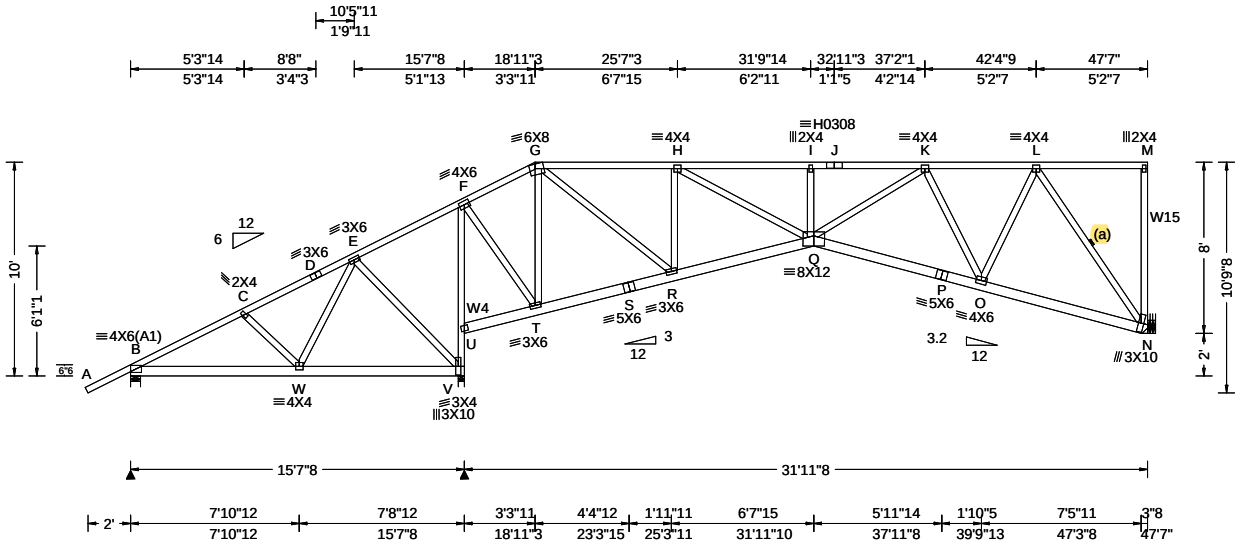

Loading Criteria (psf)

TCLL: 20.00
TCDL: 7.00
BCLL: 0.00
BCDL: 10.00
Des Ld: 37.00
NCBCLL: 10.00
Soffit: 2.00
Load Duration: 1.25
Spacing: 24.0 "

Wind Criteria

Wind Std: ASCE 7-10
Speed: 130 mph
Enclosure: Closed
Risk Category: II
EXP: B Kzt: NA
Mean Height: 15.00 ft
TCDL: 0.0 psf
BCDL: 0.0 psf
MWFRS Parallel Dist: > 2h
C&C Dist a: 4.76 ft
Loc. from endwall: not in 13.00 ft
GCpi: 0.18
Wind Duration: 1.60

Snow Criteria (Pg,Pf in PSF)

Pg: NA Ct: NA CAT: NA
Pf: NA Ce: NA
Lu: NA Cs: NA
Snow Duration: NA

Building Code:
FBC 2017 RES
TPI Std: 2014
Rep Fac: Yes
FT/RT:20(0)/0(0)
Plate Type(s):
WAVE, HS

Defl/CSI Criteria

PP Deflection in	loc	L/defl	L/#
VERT(LL): 0.143	I	999	360
VERT(CL): 0.271	I	999	240
HORZ(LL): 0.046	N	-	-
HORZ(TL): 0.094	N	-	-

Creep Factor: 2.0
Max TC CSI: 0.762
Max BC CSI: 0.844
Max Web CSI: 0.808

VIEW Ver: 18.02.01A.0205.19

▲Maximum Reactions (lbs)

Loc	Gravity R+	/ R-	/ Rh	Non-Gravity / Rw	/ U	/ RL
B	676	/-	/-	/354	/136	/278
V	1910	/-	/-	/1062	/599	/-
N	1197	/-	/-	/556	/362	/-

Wind reactions based on MWFRS
B Brg Width = 5.5 Min Req = 1.5
V Brg Width = 3.5 Min Req = 2.4
N Brg Width = - Min Req = -
Bearings B & V Fcperp = 425psi.
Members not listed have forces less than 375#

Maximum Top Chord Forces Per Ply (lbs)

Chords	Tens.	Comp.	Chords	Tens.	Comp.
B - C	345	- 745	G - H	835	- 1544
C - D	296	- 552	H - I	1244	- 2696
D - E	296	- 467	I - J	1237	- 2683
E - F	225	- 423	J - K	1237	- 2683
F - G	420	- 561	K - L	659	- 1268

Maximum Bot Chord Forces Per Ply (lbs)

Chords	Tens.	Comp.	Chords	Tens.	Comp.
B - W	611	- 309	Q - P	1781	- 907
T - S	484	- 273	P - O	1749	- 907
S - R	495	- 273	O - N	894	- 500
R - Q	1652	- 818			

Maximum Web Forces Per Ply (lbs)

Webs	Tens.	Comp.	Webs	Tens.	Comp.
W - E	453	- 140	R - H	533	- 1003
E - V	278	- 526	H - Q	1265	- 621
V - U	855	- 1470	Q - K	1181	- 547
U - F	834	- 1388	K - O	523	- 1046
F - T	1043	- 558	O - L	1012	- 413
G - T	549	- 918	L - N	710	- 1499
G - R	1389	- 648			

Lumber

Top chord: 2x4 SP #1;
Bot chord: 2x6 SP #1;
Webs: 2x4 SP #3; W4 2x4 SP SS Dense;
W15 2x4 SP #1;

Bracing

(a) Continuous lateral restraint equally spaced on member. Or 2x6 #3 or better "T" reinforcement. 80% length of web member. Attached with 10d Box or Gun (0.128"x3",min.)nails @ 6" oc.

Plating Notes

Plates sized for a minimum of 3.50 sq.in./piece.

Purlins

In lieu of structural panels or rigid ceiling use purlins to laterally brace chords as follows:

Chord	Spacing(in oc)	Start(ft)	End(ft)
TC	75	-2.07	18.93
TC	24	18.93	47.58
BC	120	0.15	15.33
BC	75	15.39	31.97
BC	120	31.97	47.58

Apply purlins to any chords above or below fillers at 24" OC unless shown otherwise above.

Wind

Wind loads based on MWFRS with additional C&C member design.

Right end vertical exposed to wind pressure.
Deflection meets L/180.

Additional Notes

WARNING: Furnish a copy of this DWG to the installation contractor. Special care must be taken during handling, shipping and installation of trusses. See "WARNING" note below.

Shim all supports to solid bearing.

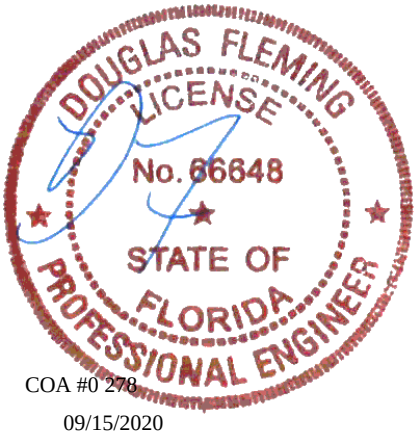

COA #0 278

09/15/2020

****WARNING**** READ AND FOLLOW ALL NOTES ON THIS DRAWING!
****IMPORTANT**** FURNISH THIS DRAWING TO ALL CONTRACTORS INCLUDING THE INSTALLERS

Trusses require extreme care in fabricating, handling, shipping, installing and bracing. Refer to and follow the latest edition of BCSI (Building Component Safety Information, by TPI and SBCA) for safety practices prior to performing these functions. Installers shall provide temporary bracing per BCSI. Unless noted otherwise, top chord shall have properly attached structural sheathing and bottom chord shall have a properly attached rigid ceiling. Locations shown for permanent lateral restraint of webs shall have bracing installed per BCSI sections B3, B7, or B10, as applicable. Apply plates to each face of truss and position as shown above and on the Joint Details, unless noted otherwise. Refer to drawings 160A-Z for standard plate positions. Refer to job's General Notes page for additional information.

Alpine, a division of ITW Building Components Group Inc. shall not be responsible for any deviation from this drawing, any failure to build the truss in conformance with ANSI/TPI 1, or for handling, shipping, installation and bracing of trusses. A seal on this drawing or cover page listing this drawing, indicates acceptance of professional engineering responsibility solely for the design shown. The suitability and use of this drawing for any structure is the responsibility of the Building Designer per ANSI/TPI 1 Sec.2.

For more information see these web sites: Alpine: www.alpineitw.com; TPI: www.tpinst.org; SBCA: www.sbcindustry.com; ICC: www.iccsafe.org

ALPINE AN ITW COMPANY
6750 Forum Drive
Suite 305
Orlando FL, 32821

Hangers / Ties

Simpson Construction Hardware is specified based on the most current information provided by Simpson Strong-Tie. Please refer to the most recent Simpson Strong-Tie catalog for additional information.

Recommended hanger connections are based on manufacturer tested capacities and calculations. Conditions may exist that require different connections than indicated. Refer to manufacturer publication for additional information.

Bearing at location x=47'4" uses the following support conditions: 47'4"
Bearing N (47'4", 12'1"2) HGUS26
Supporting Member: (3)2x8 SP SS Dense
(20) 0.148"x3" nails into supporting member,
(6) 0.148"x3" nails into supported member.

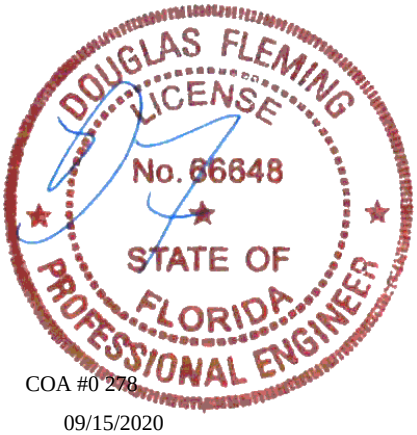

COA #0 278

09/15/2020

****WARNING**** READ AND FOLLOW ALL NOTES ON THIS DRAWING!
****IMPORTANT**** FURNISH THIS DRAWING TO ALL CONTRACTORS INCLUDING THE INSTALLERS

Trusses require extreme care in fabricating, handling, shipping, installing and bracing. Refer to and follow the latest edition of BCSI (Building Component Safety Information, by TPI and SBCA) for safety practices prior to performing these functions. Installers shall provide temporary bracing per BCSI. Unless noted otherwise, top chord shall have properly attached structural sheathing and bottom chord shall have a properly attached rigid ceiling. Locations shown for permanent lateral restraint of webs shall have bracing installed per BCSI sections B3, B7, or B10, as applicable. Apply plates to each face of truss and position as shown above and on the Joint Details, unless noted otherwise. Refer to drawings 160A-Z for standard plate positions. Refer to job's General Notes page for additional information.

Alpine, a division of ITW Building Components Group Inc. shall not be responsible for any deviation from this drawing, any failure to build the truss in conformance with ANSI/TPI 1, or for handling, shipping, installation and bracing of trusses. A seal on this drawing or cover page listing this drawing, indicates acceptance of professional engineering responsibility solely for the design shown. The suitability and use of this drawing for any structure is the responsibility of the Building Designer per ANSI/TPI 1 Sec.2.

For more information see these web sites: Alpine: www.alpineitw.com; TPI: www.tpinst.org; SBCA: www.sbcindustry.com; ICC: www.iccsafe.org

ALPINE AN ITW COMPANY
6750 Forum Drive
Suite 305
Orlando FL, 32821

SEQN: 65899 COMN FROM: RNB	Ply: 1 Qty: 1	**Job Number:** b51385aa -terrell floor plan Trademark Const Group **Truss Label:** T-17	Cust: R 857 JRef:1WYP8570001 T47 DrwNo: 259.20.1003.55667 SSB / DF 09/15/2020

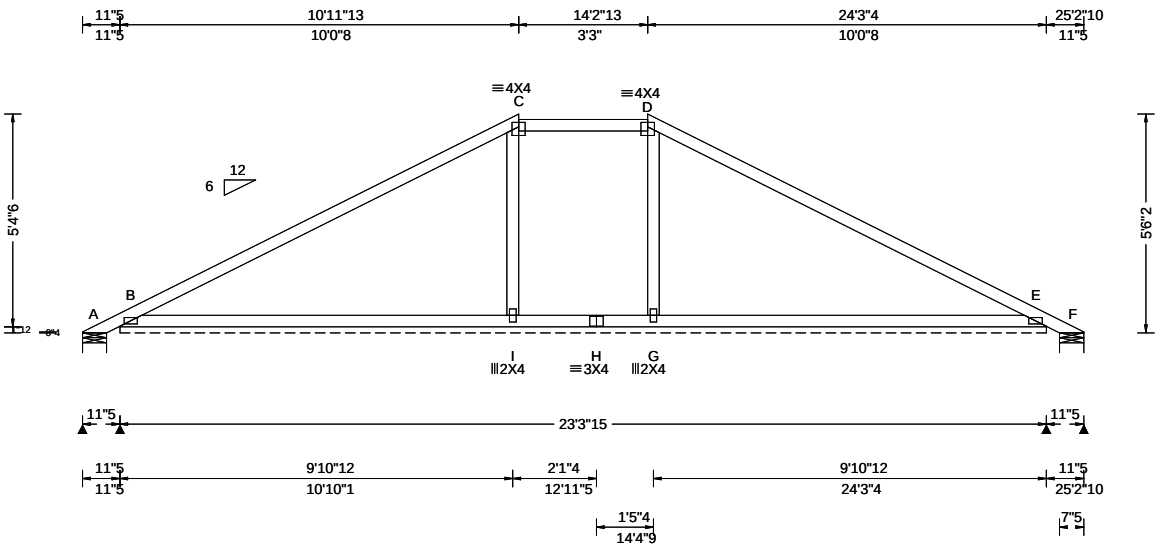

Loading Criteria (psf)
TCLL: 20.00
TCDL: 7.00
BCLL: 0.00
BCDL: 10.00
Des Ld: 37.00
NCBCLL: 0.00
Soffit: 2.00
Load Duration: 1.25
Spacing: 24.0 "

Wind Criteria
Wind Std: ASCE 7-10
Speed: 130 mph
Enclosure: Closed
Risk Category: II
EXP: B Kzt: NA
Mean Height: 15.00 ft
TCDL: 0.0 psf
BCDL: 0.0 psf
MWFRS Parallel Dist: > 2h
C&C Dist a: 3.00 ft
Loc. from endwall: not in 9.00 ft
GCpi: 0.18
Wind Duration: 1.60

Snow Criteria (Pg,Pf in PSF)
Pg: NA Ct: NA CAT: NA
Pf: NA Ce: NA
Lu: NA Cs: NA
Snow Duration: NA

Building Code:
FBC 2017 RES
TPI Std: 2014
Rep Fac: Yes
FT/RT:20(0)/0(0)
Plate Type(s):
WAVE

Defl/CSI Criteria

PP Deflection in	loc	L/defl	L/#
VERT(LL): 0.017	I	999	360
VERT(CL): 0.025	I	999	240
HORZ(LL): -0.011	G	-	-
HORZ(TL): 0.016	G	-	-

Creep Factor: 2.0
Max TC CSI: 0.994
Max BC CSI: 0.237
Max Web CSI: 0.109

VIEW Ver: 18.02.01A.0205.19

▲Maximum Reactions (lbs), or *=PLF

	Gravity			Non-Gravity		
Loc	R+	/ R-	/ Rh	/ Rw	/ U	/ RL
A	-	/-618	/-	/279	/463	/93
B*	116	/-	/-	/64	/33	/-
F	-	/-617	/-	/239	/420	/-
B		/-231				
H		/-103				
E		/-385				

Wind reactions based on MWFRS
A Brg Width = 7.3 Min Req = 1.5
B Brg Width = 279 Min Req = -
F Brg Width = 7.3 Min Req = 1.5
Bearings A, B, & F are a rigid surface.
Members not listed have forces less than 375#

Lumber
Top chord: 2x4 SP #1;
Bot chord: 2x4 SP #1;
Webs: 2x4 SP #3;

Plating Notes
All plates are 2X4(A1) except as noted.
Plates sized for a minimum of 3.50 sq.in./piece.

Purlins
In lieu of structural panels or rigid ceiling use purlins to laterally brace chords as follows:

Chord	Spacing(in oc)	Start(ft)	End(ft)
TC	69	-0.66	10.04
TC	24	10.04	13.29
TC	69	13.29	23.99
BC	120	0.15	23.18

Apply purlins to any chords above or below fillers at 24" OC unless shown otherwise above.

Wind
Wind loads based on MWFRS with additional C&C member design.

Additional Notes
Negative reaction(s) of -618# MAX. from a non-wind load case requires uplift connection. See Maximum Reactions.
Refer to DWG PB160101014 for piggyback details.

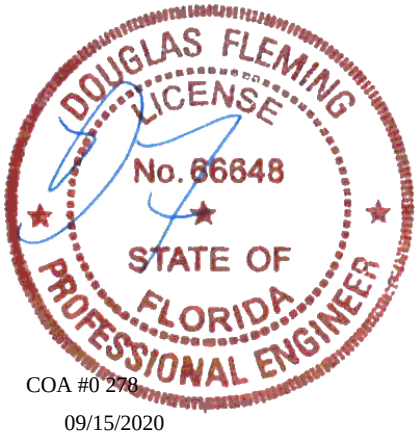

COA #0 278
09/15/2020

****WARNING**** READ AND FOLLOW ALL NOTES ON THIS DRAWING!
****IMPORTANT**** FURNISH THIS DRAWING TO ALL CONTRACTORS INCLUDING THE INSTALLERS

Trusses require extreme care in fabricating, handling, shipping, installing and bracing. Refer to and follow the latest edition of BCSI (Building Component Safety Information, by TPI and SBCA) for safety practices prior to performing these functions. Installers shall provide temporary bracing per BCSI. Unless noted otherwise, top chord shall have properly attached structural sheathing and bottom chord shall have a properly attached rigid ceiling. Locations shown for permanent lateral restraint of webs shall have bracing installed per BCSI sections B3, B7, or B10, as applicable. Apply plates to each face of truss and position as shown above and on the Joint Details, unless noted otherwise. Refer to drawings 160A-Z for standard plate positions. Refer to job's General Notes page for additional information.

Alpine, a division of ITW Building Components Group Inc. shall not be responsible for any deviation from this drawing, any failure to build the truss in conformance with ANSI/TPI 1, or for handling, shipping, installation and bracing of trusses. A seal on this drawing or cover page listing this drawing, indicates acceptance of professional engineering responsibility solely for the design shown. The suitability and use of this drawing for any structure is the responsibility of the Building Designer per ANSI/TPI 1 Sec.2.

For more information see these web sites: Alpine: www.alpineitw.com; TPI: www.tpinst.org; SBCA: www.sbcindustry.com; ICC: www.iccsafe.org

ALPINE AN ITW COMPANY
6750 Forum Drive
Suite 305
Orlando FL, 32821

SEQN: 65900 COMN FROM: RNB	Ply: 1 Qty: 1	**Job Number:** b51385aa -terrell floor plan Trademark Const Group **Truss Label:** T-18	Cust: R 857 JRef:1WYP8570001 T48 DrwNo: 259.20.1003.59333 SSB / DF 09/15/2020

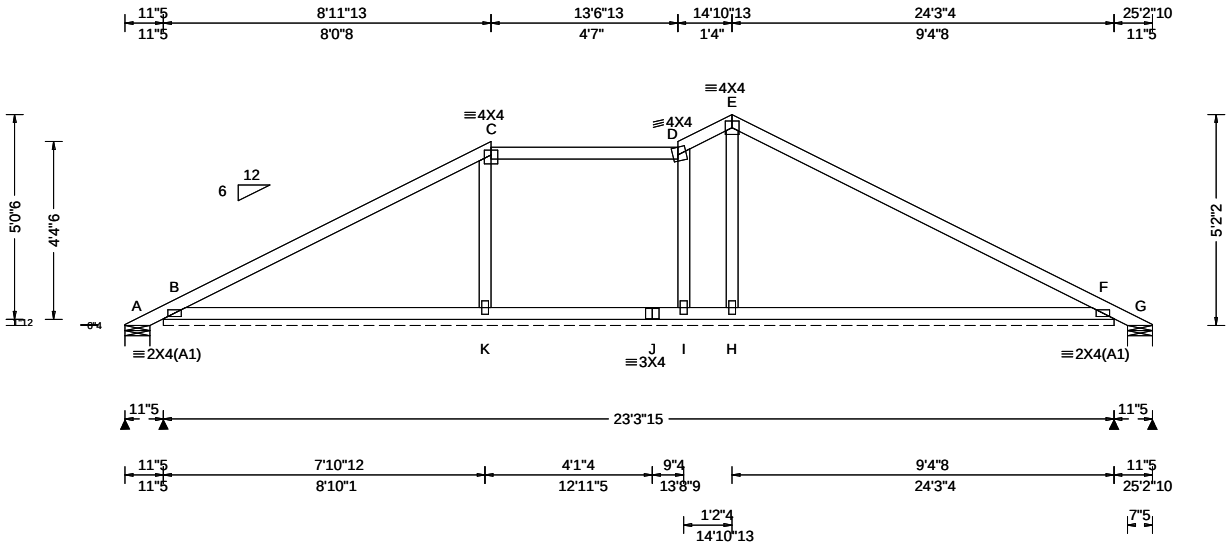

Loading Criteria (psf)

TCLL: 20.00
TCDL: 7.00
BCLL: 0.00
BCDL: 10.00
Des Ld: 37.00
NCBCLL: 0.00
Soffit: 2.00
Load Duration: 1.25
Spacing: 24.0 "

Wind Criteria

Wind Std: ASCE 7-10
Speed: 130 mph
Enclosure: Closed
Risk Category: II
EXP: B Kzt: NA
Mean Height: 15.00 ft
TCDL: 0.0 psf
BCDL: 0.0 psf
MWFRS Parallel Dist: > 2h
C&C Dist a: 3.00 ft
Loc. from endwall: not in 9.00 ft
GCpi: 0.18
Wind Duration: 1.60

Snow Criteria (Pg,Pf in PSF)

Pg: NA Ct: NA CAT: NA
Pf: NA Ce: NA
Lu: NA Cs: NA
Snow Duration: NA

Building Code:
FBC 2017 RES
TPI Std: 2014
Rep Fac: Yes
FT/RT:20(0)/0(0)
Plate Type(s):
WAVE

Defl/CSI Criteria

PP Deflection in	loc	L/defl	L/#
VERT(LL): 0.015	H	999	360
VERT(CL): 0.022	H	999	240
HORZ(LL): -0.009	H	-	-
HORZ(TL): 0.014	H	-	-

Creep Factor: 2.0
Max TC CSI: 0.855
Max BC CSI: 0.215
Max Web CSI: 0.109

VIEW Ver: 18.02.01A.0205.19

▲Maximum Reactions (lbs), or *=PLF

	Gravity			Non-Gravity		
Loc	R+	/ R-	/ Rh	/ Rw	/ U	/ RL
A	-	/-364	/-	/180	/288	/88
B*	101	/-	/-	/56	/28	/-
G	-	/-530	/-	/205	/364	/-
B		/-149				
I		/-117				
F		/-334				

Wind reactions based on MWFRS
A Brg Width = 7.3 Min Req = 1.5
B Brg Width = 279 Min Req = -
G Brg Width = 7.3 Min Req = 1.5
Bearings A, B, & G are a rigid surface.
Members not listed have forces less than 375#

Lumber

Top chord: 2x4 SP #1;
Bot chord: 2x4 SP #1;
Webs: 2x4 SP #3;

Plating Notes

All plates are 2X4 except as noted.

Plates sized for a minimum of 3.50 sq.in./piece.

Purlins

In lieu of structural panels or rigid ceiling use purlins to laterally brace chords as follows:

Chord	Spacing(in oc)	Start(ft)	End(ft)
TC	75	-0.66	8.04
TC	24	8.04	12.62
TC	18	12.62	13.96
TC	75	13.96	23.99
BC	120	0.15	23.18

Apply purlins to any chords above or below fillers at 24" OC unless shown otherwise above.

Wind

Wind loads based on MWFRS with additional C&C member design.

Additional Notes

Negative reaction(s) of -530# MAX. from a non-wind load case requires uplift connection. See Maximum Reactions.

Refer to DWG PB160101014 for piggyback details.

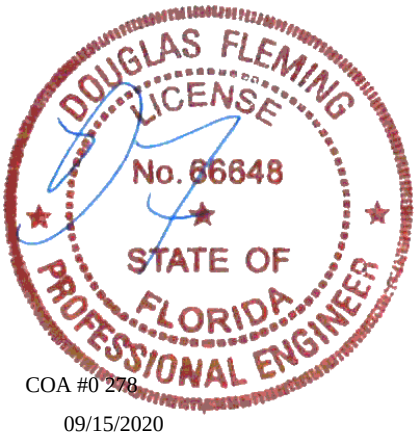

COA #0 278

09/15/2020

****WARNING**** READ AND FOLLOW ALL NOTES ON THIS DRAWING!
****IMPORTANT**** FURNISH THIS DRAWING TO ALL CONTRACTORS INCLUDING THE INSTALLERS

Trusses require extreme care in fabricating, handling, shipping, installing and bracing. Refer to and follow the latest edition of BCSI (Building Component Safety Information, by TPI and SBCA) for safety practices prior to performing these functions. Installers shall provide temporary bracing per BCSI. Unless noted otherwise, top chord shall have properly attached structural sheathing and bottom chord shall have a properly attached rigid ceiling. Locations shown for permanent lateral restraint of webs shall have bracing installed per BCSI sections B3, B7, or B10, as applicable. Apply plates to each face of truss and position as shown above and on the Joint Details, unless noted otherwise. Refer to drawings 160A-Z for standard plate positions. Refer to job's General Notes page for additional information.

Alpine, a division of ITW Building Components Group Inc. shall not be responsible for any deviation from this drawing, any failure to build the truss in conformance with ANSI/TPI 1, or for handling, shipping, installation and bracing of trusses. A seal on this drawing or cover page listing this drawing, indicates acceptance of professional engineering responsibility solely for the design shown. The suitability and use of this drawing for any structure is the responsibility of the Building Designer per ANSI/TPI 1 Sec.2.

For more information see these web sites: Alpine: www.alpineitw.com; TPI: www.tpinst.org; SBCA: www.sbcindustry.com; ICC: www.iccsafe.org

ALPINE AN ITW COMPANY
6750 Forum Drive
Suite 305
Orlando FL, 32821

SEQN: 65901 COMN	Ply: 1	**Job Number:** b51385aa	Cust: R 857 JRef:1WYP8570001 T42
FROM: RNB	Qty: 1	-terrell floor plan Trademark Const Group	DrwNo: 259.20.1004.02190
Page 1 of 2		**Truss Label:** T-19	SSB / DF 09/15/2020

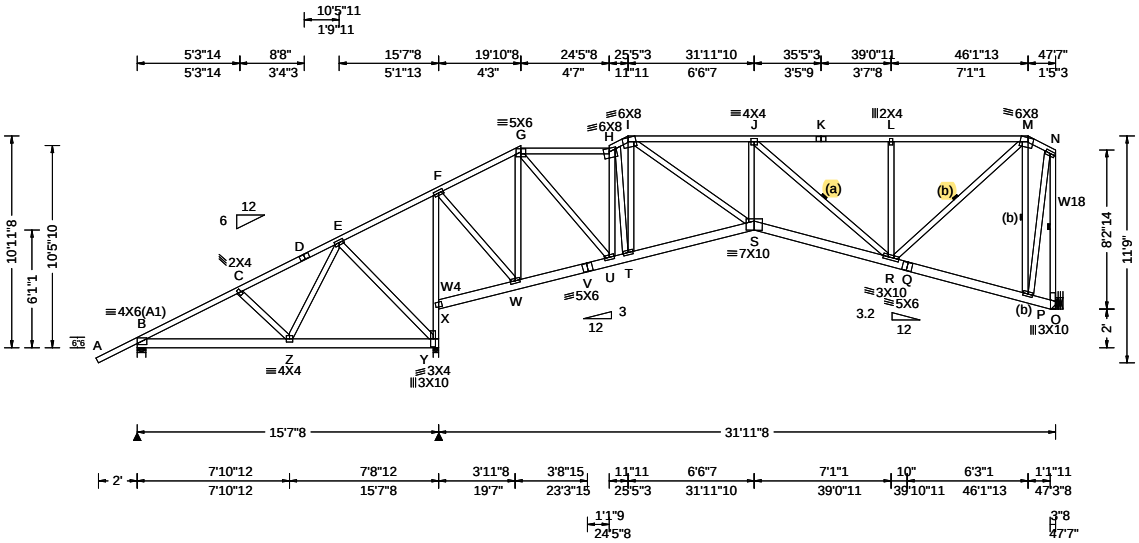

Loading Criteria (psf)	**Wind Criteria**	**Snow Criteria** (Pg,Pf in PSF)	**Defl/CSI Criteria**
TCLL: 20.00	Wind Std: ASCE 7-10	Pg: NA Ct: NA CAT: NA	PP Deflection in loc L/defl L/#
TCDL: 7.00	Speed: 130 mph	Pf: NA Ce: NA	VERT(LL): 0.119 S 999 360
BCLL: 0.00	Enclosure: Closed	Lu: NA Cs: NA	VERT(CL): 0.224 S 999 240
BCDL: 10.00	Risk Category: II	Snow Duration: NA	HORZ(LL): 0.040 O - -
Des Ld: 37.00	EXP: B Kzt: NA		HORZ(TL): 0.075 O - -
NCBCLL: 0.00	Mean Height: 15.00 ft	Building Code:	Creep Factor: 2.0
Soffit: 2.00	TCDL: 0.0 psf	FBC 2017 RES	Max TC CSI: 0.689
Load Duration: 1.25	BCDL: 0.0 psf	TPI Std: 2014	Max BC CSI: 0.310
Spacing: 24.0 "	MWFRS Parallel Dist: > 2h	Rep Fac: Yes	Max Web CSI: 0.969
	C&C Dist a: 4.76 ft	FT/RT:20(0)/0(0)	
	Loc. from endwall: not in 13.00 ft	Plate Type(s):	
	GCpi: 0.18	WAVE	VIEW Ver: 18.02.01A.0205.19
	Wind Duration: 1.60		

▲ Maximum Reactions (lbs)

Loc	Gravity R+	/ R-	/ Rh	Non-Gravity / Rw	/ U	/ RL
B	648	/-	/-	/349	/142	/298
Y	1899	/-	/-	/1081	/591	/-
O	1197	/-	/-	/569	/339	/-

Wind reactions based on MWFRS
B Brg Width = 5.5 Min Req = 1.5
Y Brg Width = 3.5 Min Req = 2.4
O Brg Width = - Min Req = -
Bearings B & Y Fcperp = 425psi.
Members not listed have forces less than 375#

Maximum Top Chord Forces Per Ply (lbs)

Chords	Tens.	Comp.	Chords	Tens.	Comp.
B - C	352	- 690	H - I	854	- 1471
C - D	303	- 496	I - J	1076	- 2140
D - E	303	- 414	J - K	687	- 1229
E - F	217	- 431	K - L	687	- 1229
F - G	473	- 660	L - M	689	- 1233
G - H	771	- 1282			

Maximum Bot Chord Forces Per Ply (lbs)

Chords	Tens.	Comp.	Chords	Tens.	Comp.
B - Z	562	- 312	U - T	1304	- 710
W - V	597	- 366	T - S	1354	- 735
V - U	602	- 366	S - R	2229	- 1178

Maximum Web Forces Per Ply (lbs)

Webs	Tens.	Comp.	Webs	Tens.	Comp.
Z - E	385	- 141	I - S	1020	- 516
E - Y	272	- 520	J - S	442	- 183
Y - X	884	- 1461	J - R	614	- 1228
X - F	867	- 1378	R - L	262	- 420
F - W	1008	- 580	R - M	1365	- 654
W - G	556	- 867	P - M	637	- 1100
G - U	1138	- 555	P - N	1130	- 587
H - U	478	- 951	N - O	560	- 1174

Lumber

Top chord: 2x4 SP #1;
Bot chord: 2x6 SP #1;
Webs: 2x4 SP #3; W4 2x4 SP SS Dense;
W18 2x4 SP #1;

Bracing

(b) Continuous lateral restraint equally spaced on member. Or 1x4 #3SRB SPF-S or better "T" reinforcement. 80% length of web member. Attached with 8d Box or Gun (0.113"x2.5",min.)nails @ 6" oc.

(a) Continuous lateral restraint equally spaced on member. Or 2x6 #3 or better "T" reinforcement. 80% length of web member. Attached with 10d Box or Gun (0.128"x3",min.)nails @ 6" oc.

Plating Notes

All plates are 3X6 except as noted.

Plates sized for a minimum of 3.50 sq.in./piece.

Purlins

In lieu of structural panels or rigid ceiling use purlins to laterally brace chords as follows:

Chord	Spacing(in oc)	Start(ft)	End(ft)
TC	75	-2.07	19.88
TC	24	19.88	24.46
TC	13	24.46	25.43
TC	24	25.43	46.15
TC	19	46.15	47.58
BC	120	0.15	15.33
BC	75	15.39	31.97
BC	75	31.97	47.58

Apply purlins to any chords above or below fillers at 24" OC unless shown otherwise above.

Wind

Wind loads based on MWFRS with additional C&C member design.

Right end vertical exposed to wind pressure. Deflection meets L/180.

Additional Notes

WARNING: Furnish a copy of this DWG to the installation contractor. Special care must be taken during handling, shipping and installation of trusses. See "WARNING" note below.

Shim all supports to solid bearing.

DOUGLAS FLEMING LICENSE No. 66648 STATE OF FLORIDA PROFESSIONAL ENGINEER

COA #0 278

09/15/2020

****WARNING**** READ AND FOLLOW ALL NOTES ON THIS DRAWING!
****IMPORTANT**** FURNISH THIS DRAWING TO ALL CONTRACTORS INCLUDING THE INSTALLERS

Trusses require extreme care in fabricating, handling, shipping, installing and bracing. Refer to and follow the latest edition of BCSI (Building Component Safety Information, by TPI and SBCA) for safety practices prior to performing these functions. Installers shall provide temporary bracing per BCSI. Unless noted otherwise, top chord shall have properly attached structural sheathing and bottom chord shall have a properly attached rigid ceiling. Locations shown for permanent lateral restraint of webs shall have bracing installed per BCSI sections B3, B7, or B10, as applicable. Apply plates to each face of truss and position as shown above and on the Joint Details, unless noted otherwise. Refer to drawings 160A-Z for standard plate positions. Refer to job's General Notes page for additional information.

Alpine, a division of ITW Building Components Group Inc. shall not be responsible for any deviation from this drawing, any failure to build the truss in conformance with ANSI/TPI 1, or for handling, shipping, installation and bracing of trusses. A seal on this drawing or cover page listing this drawing, indicates acceptance of professional engineering responsibility solely for the design shown. The suitability and use of this drawing for any structure is the responsibility of the Building Designer per ANSI/TPI 1 Sec.2.

For more information see these web sites: Alpine: www.alpineitw.com; TPI: www.tpinst.org; SBCA: www.sbcindustry.com; ICC: www.iccsafe.org

ALPINE AN ITW COMPANY
6750 Forum Drive
Suite 305
Orlando FL, 32821

Hangers / Ties

Simpson Construction Hardware is specified based on the most current information provided by Simpson Strong-Tie. Please refer to the most recent Simpson Strong-Tie catalog for additional information.

Recommended hanger connections are based on manufacturer tested capacities and calculations. Conditions may exist that require different connections than indicated. Refer to manufacturer publication for additional information.

Bearing at location x=47'4" uses the following support conditions: 47'4"
Bearing O (47'4", 12'1"2) HGUS26
Supporting Member: (3)2x8 SP SS Dense
(20) 0.148"x3" nails into supporting member,
(6) 0.148"x3" nails into supported member.

DOUGLAS FLEMING
LICENSE
No. 66648
STATE OF
FLORIDA
PROFESSIONAL ENGINEER

COA #0 278

09/15/2020

****WARNING**** READ AND FOLLOW ALL NOTES ON THIS DRAWING!
****IMPORTANT**** FURNISH THIS DRAWING TO ALL CONTRACTORS INCLUDING THE INSTALLERS

Trusses require extreme care in fabricating, handling, shipping, installing and bracing. Refer to and follow the latest edition of BCSI (Building Component Safety Information, by TPI and SBCA) for safety practices prior to performing these functions. Installers shall provide temporary bracing per BCSI. Unless noted otherwise, top chord shall have properly attached structural sheathing and bottom chord shall have a properly attached rigid ceiling. Locations shown for permanent lateral restraint of webs shall have bracing installed per BCSI sections B3, B7, or B10, as applicable. Apply plates to each face of truss and position as shown above and on the Joint Details, unless noted otherwise. Refer to drawings 160A-Z for standard plate positions. Refer to job's General Notes page for additional information.

Alpine, a division of ITW Building Components Group Inc. shall not be responsible for any deviation from this drawing, any failure to build the truss in conformance with ANSI/TPI 1, or for handling, shipping, installation and bracing of trusses. A seal on this drawing or cover page listing this drawing, indicates acceptance of professional engineering responsibility solely for the design shown. The suitability and use of this drawing for any structure is the responsibility of the Building Designer per ANSI/TPI 1 Sec.2.

For more information see these web sites: Alpine: www.alpineitw.com; TPI: www.tpinst.org; SBCA: www.sbcindustry.com; ICC: www.iccsafe.org

ALPINE
AN ITW COMPANY
6750 Forum Drive
Suite 305
Orlando FL, 32821

SEQN: 65902 COMN FROM: RNB	Ply: 1 Qty: 1	**Job Number:** b51385aa -terrell floor plan Trademark Const Group **Truss Label:** T-2	Cust: R 857 JRef:1WYP8570001 T21 DrwNo: 259.20.1004.04213 SSB / DF 09/15/2020

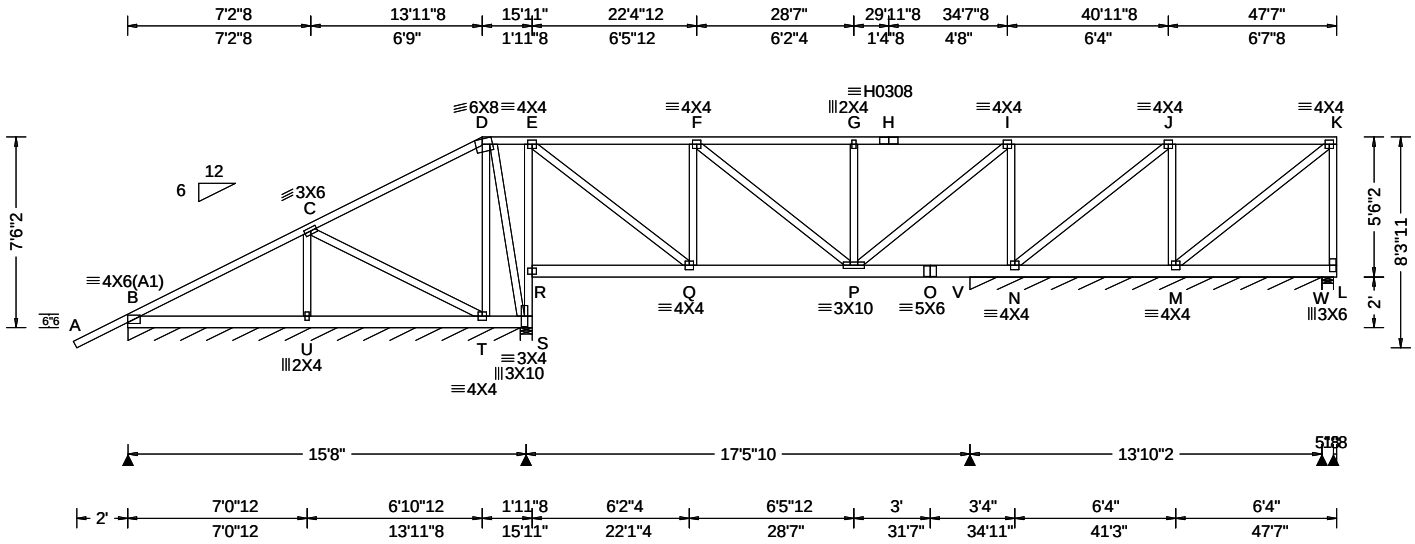

Loading Criteria (psf)

TCLL:	20.00
TCDL:	7.00
BCLL:	0.00
BCDL:	10.00
Des Ld:	37.00
NCBCLL:	10.00
Soffit:	2.00

Load Duration: 1.25
Spacing: 24.0 "

Wind Criteria
Wind Std: ASCE 7-10
Speed: 130 mph
Enclosure: Closed
Risk Category: II
EXP: B Kzt: NA
Mean Height: 15.00 ft
TCDL: 0.0 psf
BCDL: 0.0 psf
MWFRS Parallel Dist: h/2 to h
C&C Dist a: 4.76 ft
Loc. from endwall: not in 6.50 ft
GCpi: 0.18
Wind Duration: 1.60

Snow Criteria (Pg,Pf in PSF)
Pg: NA Ct: NA CAT: NA
Pf: NA Ce: NA
Lu: NA Cs: NA
Snow Duration: NA

Building Code:
FBC 2017 RES
TPI Std: 2014
Rep Fac: Yes
FT/RT:20(0)/0(0)
Plate Type(s):
WAVE, HS

Defl/CSI Criteria

PP Deflection in	loc	L/defl	L/#
VERT(LL): 0.019	G	999	360
VERT(CL): 0.036	G	999	240
HORZ(LL): -0.006	L	-	-
HORZ(TL): 0.011	I	-	-

Creep Factor: 2.0
Max TC CSI: 0.497
Max BC CSI: 0.176
Max Web CSI: 0.497

VIEW Ver: 18.02.01A.0205.19

▲Maximum Reactions (lbs), or *=PLF

	Gravity			Non-Gravity		
Loc	R+	/ R-	/ Rh	/ Rw	/ U	/ RL
B*	76	/-	/-	/46	/23	/13
S	842	/-	/-	/380	/255	/-
V*	118	/-	/-	/56	/39	/-
W	169	/-	/-	/60	/48	/-

Wind reactions based on MWFRS
B Brg Width = 185 Min Req = -
S Brg Width = 5.5 Min Req = 1.5
V Brg Width = 166 Min Req = -
W Brg Width = 5.5 Min Req = 1.5
Bearings B, S, V, & W Fcperp = 425psi.
Members not listed have forces less than 375#

Maximum Top Chord Forces Per Ply (lbs)

Chords	Tens.	Comp.	Chords	Tens.	Comp.
E - F	353	- 491	G - H	270	- 395
F - G	270	- 395	H - I	270	- 395

Maximum Bot Chord Forces Per Ply (lbs)

Chords	Tens.	Comp.	Chords	Tens.	Comp.
Q - P	506	- 248	O - N	447	- 442

Maximum Web Forces Per Ply (lbs)

Webs	Tens.	Comp.	Webs	Tens.	Comp.
S - R	380	- 783	P - I	794	- 402
R - E	379	- 725	I - N	460	- 864
E - Q	658	- 307			

Lumber
Top chord: 2x4 SP #1;
Bot chord: 2x6 SP #1;
Webs: 2x4 SP #3;

Plating Notes
Plates sized for a minimum of 3.50 sq.in./piece.

Purlins
In lieu of structural panels or rigid ceiling use purlins to laterally brace chords as follows:

Chord	Spacing(in oc)	Start(ft)	End(ft)
TC	75	-2.07	13.96
TC	24	13.96	47.58
BC	120	0.02	15.62
BC	75	15.71	47.58

Apply purlins to any chords above or below fillers at 24" OC unless shown otherwise above.

Wind
Wind loads based on MWFRS with additional C&C member design.
Right end vertical exposed to wind pressure. Deflection meets L/180.
Right cantilever is not exposed to wind

Additional Notes
WARNING: Furnish a copy of this DWG to the installation contractor. Special care must be taken during handling, shipping and installation of trusses. See "WARNING" note below.

DOUGLAS FLEMING
LICENSE
No. 66648
STATE OF
FLORIDA
PROFESSIONAL ENGINEER

COA #0 278

09/15/2020

****WARNING**** READ AND FOLLOW ALL NOTES ON THIS DRAWING!
****IMPORTANT**** FURNISH THIS DRAWING TO ALL CONTRACTORS INCLUDING THE INSTALLERS

Trusses require extreme care in fabricating, handling, shipping, installing and bracing. Refer to and follow the latest edition of BCSI (Building Component Safety Information, by TPI and SBCA) for safety practices prior to performing these functions. Installers shall provide temporary bracing per BCSI. Unless noted otherwise, top chord shall have properly attached structural sheathing and bottom chord shall have a properly attached rigid ceiling. Locations shown for permanent lateral restraint of webs shall have bracing installed per BCSI sections B3, B7, or B10, as applicable. Apply plates to each face of truss and position as shown above and on the Joint Details, unless noted otherwise. Refer to drawings 160A-Z for standard plate positions. Refer to job's General Notes page for additional information.

Alpine, a division of ITW Building Components Group Inc. shall not be responsible for any deviation from this drawing, any failure to build the truss in conformance with ANSI/TPI 1, or for handling, shipping, installation and bracing of trusses. A seal on this drawing or cover page listing this drawing, indicates acceptance of professional engineering responsibility solely for the design shown. The suitability and use of this drawing for any structure is the responsibility of the Building Designer per ANSI/TPI 1 Sec.2.

For more information see these web sites: Alpine: www.alpineitw.com; TPI: www.tpinst.org; SBCA: www.sbcindustry.com; ICC: www.iccsafe.org

ALPINE
AN ITW COMPANY
6750 Forum Drive
Suite 305
Orlando FL, 32821

SEQN: 65903 COMN FROM: RNB	Ply: 1 Qty: 1	**Job Number:** b51385aa -terrell floor plan Trademark Const Group **Truss Label:** T-20	Cust: R 857 JRef:1WYP8570001 T52 DrwNo: 259.20.1004.06017 SSB / DF 09/15/2020

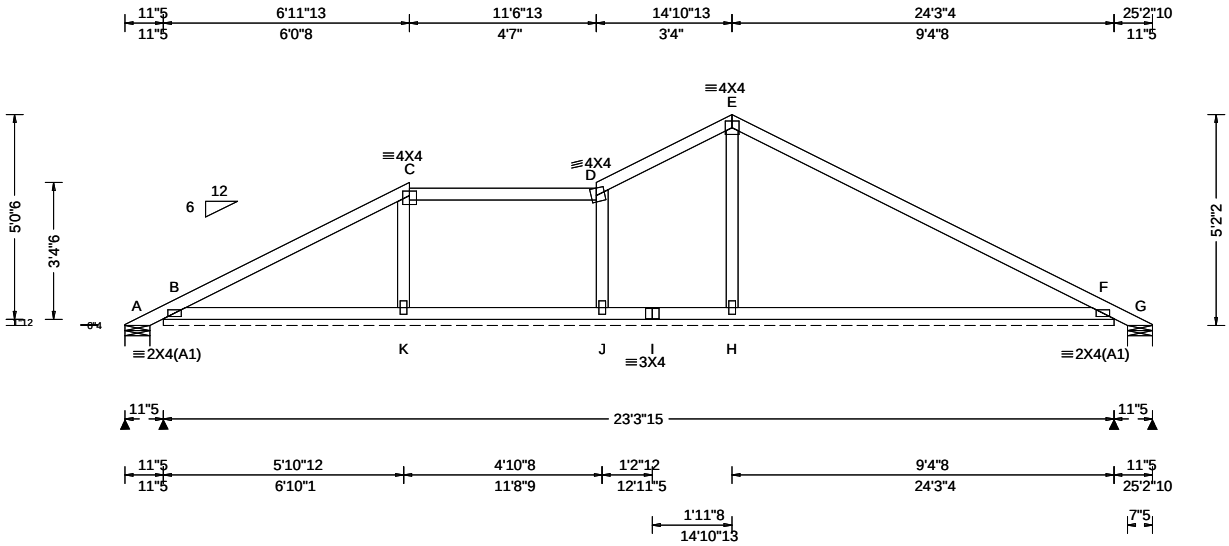

Loading Criteria (psf)	**Wind Criteria**	**Snow Criteria** (Pg,Pf in PSF)	**Defl/CSI Criteria**	**▲Maximum Reactions (lbs), or *=PLF**
TCLL: 20.00 TCDL: 7.00 BCLL: 0.00 BCDL: 10.00 Des Ld: 37.00 NCBCLL: 0.00 Soffit: 2.00 Load Duration: 1.25 Spacing: 24.0 "	Wind Std: ASCE 7-10 Speed: 130 mph Enclosure: Closed Risk Category: II EXP: B Kzt: NA Mean Height: 15.00 ft TCDL: 0.0 psf BCDL: 0.0 psf MWFRS Parallel Dist: > 2h C&C Dist a: 3.00 ft Loc. from endwall: not in 9.00 ft GCpi: 0.18 Wind Duration: 1.60	Pg: NA Ct: NA CAT: NA Pf: NA Ce: NA Lu: NA Cs: NA Snow Duration: NA Building Code: FBC 2017 RES TPI Std: 2014 Rep Fac: Yes FT/RT:20(0)/0(0) Plate Type(s): WAVE	PP Deflection in loc L/defl L/# VERT(LL): 0.015 H 999 360 VERT(CL): 0.022 H 999 240 HORZ(LL): -0.009 H - - HORZ(TL): 0.013 H - - Creep Factor: 2.0 Max TC CSI: 0.846 Max BC CSI: 0.202 Max Web CSI: 0.080 VIEW Ver: 18.02.01A.0205.19	

	Gravity			Non-Gravity		
Loc	R+	/ R-	/ Rh	/ Rw	/ U	/ RL
A	-	/-172	/-	/108	/156	/88
B*	93	/-	/-	/53	/26	/-
G	-	/-533	/-	/205	/367	/-
J		/-125				
F		/-335				

Wind reactions based on MWFRS
A Brg Width = 7.3 Min Req = 1.5
B Brg Width = 279 Min Req = -
G Brg Width = 7.3 Min Req = 1.5
Bearings A, B, & G are a rigid surface.
Members not listed have forces less than 375#

Lumber

Top chord: 2x4 SP #1;
Bot chord: 2x4 SP #1;
Webs: 2x4 SP #3;

Plating Notes

All plates are 2X4 except as noted.

Plates sized for a minimum of 3.50 sq.in./piece.

Purlins

In lieu of structural panels or rigid ceiling use purlins to laterally brace chords as follows:

Chord	Spacing(in oc)	Start(ft)	End(ft)
TC	75	-0.66	6.04
TC	24	6.04	10.62
TC	45	10.62	13.96
TC	75	13.96	23.99
BC	120	0.15	23.18

Apply purlins to any chords above or below fillers at 24" OC unless shown otherwise above.

Wind

Wind loads based on MWFRS with additional C&C member design.

Additional Notes

Negative reaction(s) of -533# MAX. from a non-wind load case requires uplift connection. See Maximum Reactions.

Refer to DWG PB160101014 for piggyback details.

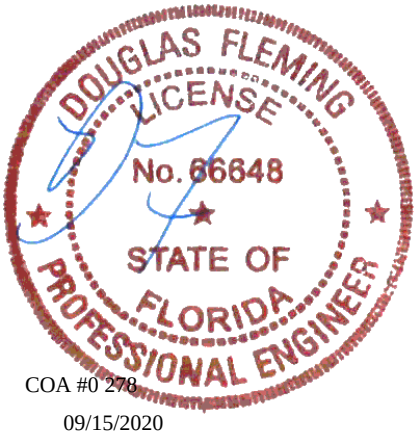

COA #0 278

09/15/2020

****WARNING**** READ AND FOLLOW ALL NOTES ON THIS DRAWING!
****IMPORTANT**** FURNISH THIS DRAWING TO ALL CONTRACTORS INCLUDING THE INSTALLERS

Trusses require extreme care in fabricating, handling, shipping, installing and bracing. Refer to and follow the latest edition of BCSI (Building Component Safety Information, by TPI and SBCA) for safety practices prior to performing these functions. Installers shall provide temporary bracing per BCSI. Unless noted otherwise, top chord shall have properly attached structural sheathing and bottom chord shall have a properly attached rigid ceiling. Locations shown for permanent lateral restraint of webs shall have bracing installed per BCSI sections B3, B7, or B10, as applicable. Apply plates to each face of truss and position as shown above and on the Joint Details, unless noted otherwise. Refer to drawings 160A-Z for standard plate positions. Refer to job's General Notes page for additional information.

Alpine, a division of ITW Building Components Group Inc. shall not be responsible for any deviation from this drawing, any failure to build the truss in conformance with ANSI/TPI 1, or for handling, shipping, installation and bracing of trusses. A seal on this drawing or cover page listing this drawing, indicates acceptance of professional engineering responsibility solely for the design shown. The suitability and use of this drawing for any structure is the responsibility of the Building Designer per ANSI/TPI 1 Sec.2.

For more information see these web sites: Alpine: www.alpineitw.com; TPI: www.tpinst.org; SBCA: www.sbcindustry.com; ICC: www.iccsafe.org

ALPINE AN ITW COMPANY
6750 Forum Drive
Suite 305
Orlando FL, 32821

SEQN: 65904 COMN	Ply: 1	**Job Number:** b51385aa	Cust: R 857 JRef:1WYP8570001 T75
FROM: RNB	Qty: 1	-terrell floor plan Trademark Const Group	DrwNo: 259.20.0952.32133
Page 1 of 2		**Truss Label:** T-21	SSB / DF 09/15/2020

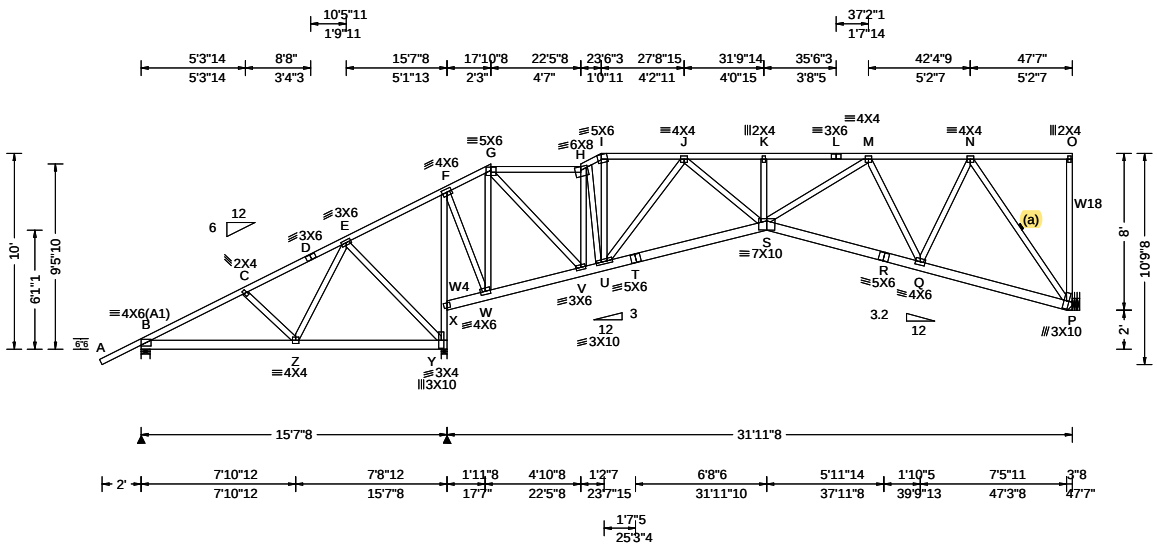

Loading Criteria (psf)
TCLL: 20.00
TCDL: 7.00
BCLL: 0.00
BCDL: 10.00
Des Ld: 37.00
NCBCLL: 0.00
Soffit: 2.00
Load Duration: 1.25
Spacing: 24.0 "

Wind Criteria
Wind Std: ASCE 7-10
Speed: 130 mph
Enclosure: Closed
Risk Category: II
EXP: B Kzt: NA
Mean Height: 15.00 ft
TCDL: 0.0 psf
BCDL: 0.0 psf
MWFRS Parallel Dist: > 2h
C&C Dist a: 4.76 ft
Loc. from endwall: not in 13.00 ft
GCpi: 0.18
Wind Duration: 1.60

Snow Criteria (Pg,Pf in PSF)
Pg: NA Ct: NA CAT: NA
Pf: NA Ce: NA
Lu: NA Cs: NA
Snow Duration: NA

Building Code:
FBC 2017 RES
TPI Std: 2014
Rep Fac: Yes
FT/RT:20(0)/0(0)
Plate Type(s):
WAVE

Defl/CSI Criteria

PP Deflection in	loc	L/defl	L/#
VERT(LL): 0.137	K	999	360
VERT(CL): 0.259	K	999	240
HORZ(LL): 0.046	P	-	-
HORZ(TL): 0.086	P	-	-

Creep Factor: 2.0
Max TC CSI: 0.662
Max BC CSI: 0.839
Max Web CSI: 0.999

VIEW Ver: 18.02.01A.0205.19

▲Maximum Reactions (lbs)

Loc	Gravity R+	/ R-	/ Rh	Non-Gravity / Rw	/ U	/ RL
B	638	/-	/-	/353	/136	/277
Y	1914	/-	/-	/1061	/597	/-
P	1191	/-	/-	/555	/362	/-

Wind reactions based on MWFRS
B Brg Width = 5.5 Min Req = 1.5
Y Brg Width = 3.5 Min Req = 2.4
P Brg Width = - Min Req = -
Bearings B & Y Fcperp = 425psi.
Members not listed have forces less than 375#

Maximum Top Chord Forces Per Ply (lbs)

Chords	Tens.	Comp.	Chords	Tens.	Comp.
B - C	333	- 668	I - J	739	- 1219
C - D	284	- 474	J - K	1280	- 2671
D - E	284	- 389	K - L	1273	- 2660
E - F	231	- 429	L - M	1273	- 2660
G - H	712	- 1136	M - N	672	- 1258
H - I	821	- 1387			

Maximum Bot Chord Forces Per Ply (lbs)

Chords	Tens.	Comp.	Chords	Tens.	Comp.
B - Z	543	- 308	S - R	1774	- 918
V - U	1163	- 601	R - Q	1743	- 918
U - T	1912	- 997	Q - P	887	- 503
T - S	1945	- 997			

Maximum Web Forces Per Ply (lbs)

Webs	Tens.	Comp.	Webs	Tens.	Comp.
Z - E	387	- 140	I - U	520	- 292
E - Y	283	- 522	U - J	565	- 1111
Y - X	888	- 1476	J - S	1046	- 498
X - F	853	- 1379	S - M	1164	- 552
F - W	1019	- 566	M - Q	534	- 1049
W - G	615	- 1029	Q - N	1004	- 420
G - V	1305	- 628	N - P	715	- 1487
H - V	541	- 1122			

Lumber
Top chord: 2x4 SP #1;
Bot chord: 2x6 SP #1;
Webs: 2x4 SP #3; W4 2x4 SP SS Dense;
W18 2x4 SP #1;

Bracing
(a) Continuous lateral restraint equally spaced on member. Or 2x6 #3 or better "T" reinforcement. 80% length of web member. Attached with 10d Box or Gun (0.128"x3",min.)nails @ 6" oc.

Plating Notes
Plates sized for a minimum of 3.50 sq.in./piece.

Purlins
In lieu of structural panels or rigid ceiling use purlins to laterally brace chords as follows:

Chord	Spacing(in oc)	Start(ft)	End(ft)
TC	75	-2.07	17.88
TC	24	17.88	22.46
TC	15	22.46	23.52
TC	24	23.52	47.58
BC	120	0.15	15.33
BC	75	15.39	31.97
BC	120	31.97	47.58

Apply purlins to any chords above or below fillers at 24" OC unless shown otherwise above.

Wind
Wind loads based on MWFRS with additional C&C member design.
Right end vertical exposed to wind pressure.
Deflection meets L/180.

Additional Notes
WARNING: Furnish a copy of this DWG to the installation contractor. Special care must be taken during handling, shipping and installation of trusses. See "WARNING" note below.
Shim all supports to solid bearing.

DOUGLAS FLEMING LICENSE No. 66648 STATE OF FLORIDA PROFESSIONAL ENGINEER

COA #0 278

09/15/2020

****WARNING**** READ AND FOLLOW ALL NOTES ON THIS DRAWING!
****IMPORTANT**** FURNISH THIS DRAWING TO ALL CONTRACTORS INCLUDING THE INSTALLERS

Trusses require extreme care in fabricating, handling, shipping, installing and bracing. Refer to and follow the latest edition of BCSI (Building Component Safety Information, by TPI and SBCA) for safety practices prior to performing these functions. Installers shall provide temporary bracing per BCSI. Unless noted otherwise, top chord shall have properly attached structural sheathing and bottom chord shall have a properly attached rigid ceiling. Locations shown for permanent lateral restraint of webs shall have bracing installed per BCSI sections B3, B7, or B10, as applicable. Apply plates to each face of truss and position as shown above and on the Joint Details, unless noted otherwise. Refer to drawings 160A-Z for standard plate positions. Refer to job's General Notes page for additional information.

Alpine, a division of ITW Building Components Group Inc. shall not be responsible for any deviation from this drawing, any failure to build the truss in conformance with ANSI/TPI 1, or for handling, shipping, installation and bracing of trusses. A seal on this drawing or cover page listing this drawing, indicates acceptance of professional engineering responsibility solely for the design shown. The suitability and use of this drawing for any structure is the responsibility of the Building Designer per ANSI/TPI 1 Sec.2.

For more information see these web sites: Alpine: www.alpineitw.com; TPI: www.tpinst.org; SBCA: www.sbcindustry.com; ICC: www.iccsafe.org

ALPINE AN ITW COMPANY
6750 Forum Drive
Suite 305
Orlando FL, 32821

Hangers / Ties

Simpson Construction Hardware is specified based on the most current information provided by Simpson Strong-Tie. Please refer to the most recent Simpson Strong-Tie catalog for additional information.

Recommended hanger connections are based on manufacturer tested capacities and calculations. Conditions may exist that require different connections than indicated. Refer to manufacturer publication for additional information.

Bearing at location x=47'4" uses the following support conditions: 47'4"
Bearing P (47'4", 12'1"2) HGUS26
Supporting Member: (3)2x8 SP SS Dense
(20) 0.148"x3" nails into supporting member,
(6) 0.148"x3" nails into supported member.

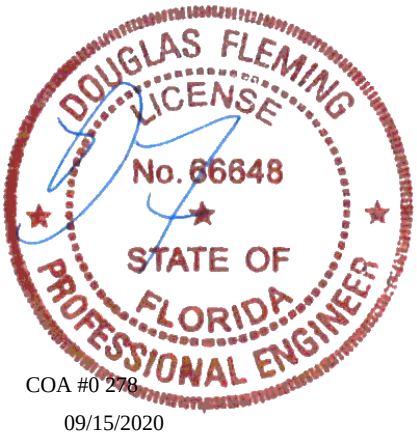

COA #0 278

09/15/2020

****WARNING**** READ AND FOLLOW ALL NOTES ON THIS DRAWING!
****IMPORTANT**** FURNISH THIS DRAWING TO ALL CONTRACTORS INCLUDING THE INSTALLERS

Trusses require extreme care in fabricating, handling, shipping, installing and bracing. Refer to and follow the latest edition of BCSI (Building Component Safety Information, by TPI and SBCA) for safety practices prior to performing these functions. Installers shall provide temporary bracing per BCSI. Unless noted otherwise, top chord shall have properly attached structural sheathing and bottom chord shall have a properly attached rigid ceiling. Locations shown for permanent lateral restraint of webs shall have bracing installed per BCSI sections B3, B7, or B10, as applicable. Apply plates to each face of truss and position as shown above and on the Joint Details, unless noted otherwise. Refer to drawings 160A-Z for standard plate positions. Refer to job's General Notes page for additional information.

Alpine, a division of ITW Building Components Group Inc. shall not be responsible for any deviation from this drawing, any failure to build the truss in conformance with ANSI/TPI 1, or for handling, shipping, installation and bracing of trusses. A seal on this drawing or cover page listing this drawing, indicates acceptance of professional engineering responsibility solely for the design shown. The suitability and use of this drawing for any structure is the responsibility of the Building Designer per ANSI/TPI 1 Sec.2.

For more information see these web sites: Alpine: www.alpineitw.com; TPI: www.tpinst.org; SBCA: www.sbcindustry.com; ICC: www.iccsafe.org

ALPINE AN ITW COMPANY
6750 Forum Drive
Suite 305
Orlando FL, 32821

SEQN: 65905 COMN FROM: RNB	Ply: 1 Qty: 1	**Job Number:** b51385aa -terrell floor plan Trademark Const Group **Truss Label:** T-22	Cust: R 857 JRef:1WYP8570001 T19 DrwNo: 259.20.0953.54987 SSB / DF 09/15/2020

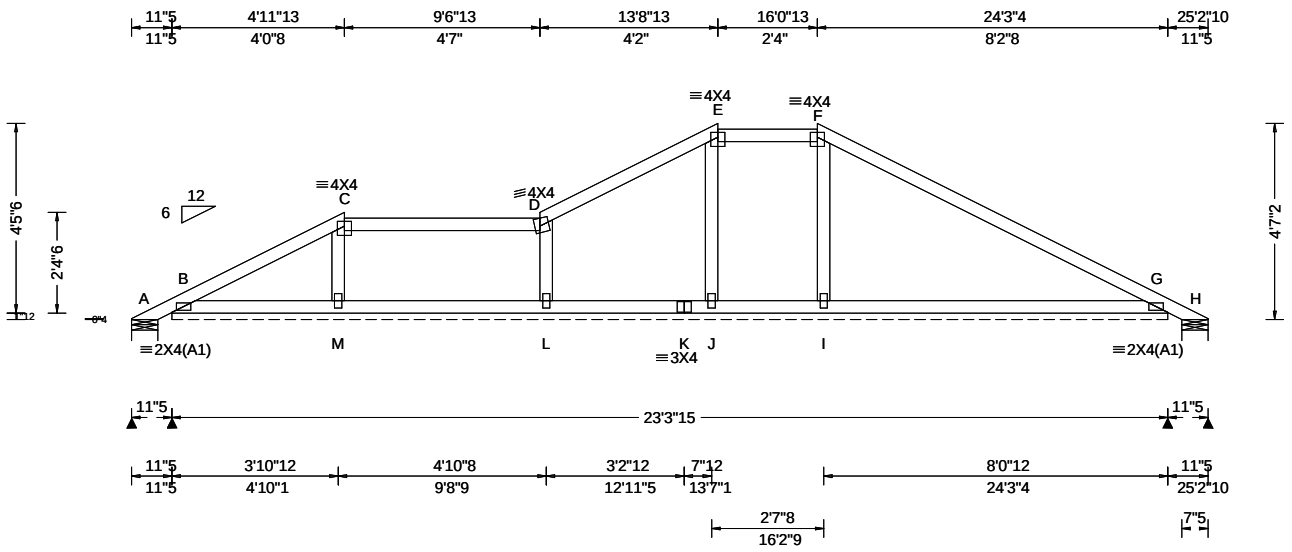

Loading Criteria (psf)

TCLL: 20.00
TCDL: 7.00
BCLL: 0.00
BCDL: 10.00
Des Ld: 37.00
NCBCLL: 0.00
Soffit: 2.00
Load Duration: 1.25
Spacing: 24.0 "

Wind Criteria

Wind Std: ASCE 7-10
Speed: 130 mph
Enclosure: Closed
Risk Category: II
EXP: B Kzt: NA
Mean Height: 15.00 ft
TCDL: 0.0 psf
BCDL: 0.0 psf
MWFRS Parallel Dist: > 2h
C&C Dist a: 3.00 ft
Loc. from endwall: not in 9.00 ft
GCpi: 0.18
Wind Duration: 1.60

Snow Criteria (Pg,Pf in PSF)

Pg: NA Ct: NA CAT: NA
Pf: NA Ce: NA
Lu: NA Cs: NA
Snow Duration: NA

Building Code:
FBC 2017 RES
TPI Std: 2014
Rep Fac: Yes
FT/RT:20(0)/0(0)
Plate Type(s):
WAVE

Defl/CSI Criteria

PP Deflection in	loc	L/defl	L/#
VERT(LL): 0.011	I	999	360
VERT(CL): 0.016	I	999	240
HORZ(LL): -0.006	I	-	-
HORZ(TL): 0.009	I	-	-

Creep Factor: 2.0
Max TC CSI: 0.610
Max BC CSI: 0.145
Max Web CSI: 0.077

VIEW Ver: 18.02.01A.0205.19

▲Maximum Reactions (lbs), or *=PLF

	Gravity			Non-Gravity		
Loc	R+	/ R-	/ Rh	/ Rw	/ U	/ RL
A	-	/-48	/-	/56	/67	/77
B*	81	/-	/-	/47	/24	/-
H	-	/-387	/-	/149	/265	/-
L		/-119				
G		/-260				

Wind reactions based on MWFRS
A Brg Width = 7.3 Min Req = 1.5
B Brg Width = 279 Min Req = -
H Brg Width = 7.3 Min Req = 1.5
Bearings A, B, & H are a rigid surface.
Members not listed have forces less than 375#

Lumber

Top chord: 2x4 SP #1;
Bot chord: 2x4 SP #1;
Webs: 2x4 SP #3;

Plating Notes

All plates are 2X4 except as noted.

Plates sized for a minimum of 3.50 sq.in./piece.

Purlins

In lieu of structural panels or rigid ceiling use purlins to laterally brace chords as follows:

Chord	Spacing(in oc)	Start(ft)	End(ft)
TC	63	-0.66	4.04
TC	24	4.04	8.62
TC	56	8.62	12.79
TC	24	12.79	15.12
TC	75	15.12	23.99
BC	120	0.15	23.18

Apply purlins to any chords above or below fillers at 24" OC unless shown otherwise above.

Wind

Wind loads based on MWFRS with additional C&C member design.

Additional Notes

Negative reaction(s) of -387# MAX. from a non-wind load case requires uplift connection. See Maximum Reactions.

Refer to DWG PB160101014 for piggyback details.

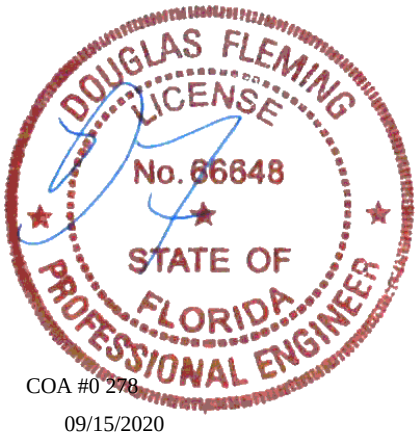

COA #0 278

09/15/2020

****WARNING**** READ AND FOLLOW ALL NOTES ON THIS DRAWING!
****IMPORTANT**** FURNISH THIS DRAWING TO ALL CONTRACTORS INCLUDING THE INSTALLERS

Trusses require extreme care in fabricating, handling, shipping, installing and bracing. Refer to and follow the latest edition of BCSI (Building Component Safety Information, by TPI and SBCA) for safety practices prior to performing these functions. Installers shall provide temporary bracing per BCSI. Unless noted otherwise, top chord shall have properly attached structural sheathing and bottom chord shall have a properly attached rigid ceiling. Locations shown for permanent lateral restraint of webs shall have bracing installed per BCSI sections B3, B7, or B10, as applicable. Apply plates to each face of truss and position as shown above and on the Joint Details, unless noted otherwise. Refer to drawings 160A-Z for standard plate positions. Refer to job's General Notes page for additional information.

Alpine, a division of ITW Building Components Group Inc. shall not be responsible for any deviation from this drawing, any failure to build the truss in conformance with ANSI/TPI 1, or for handling, shipping, installation and bracing of trusses. A seal on this drawing or cover page listing this drawing, indicates acceptance of professional engineering responsibility solely for the design shown. The suitability and use of this drawing for any structure is the responsibility of the Building Designer per ANSI/TPI 1 Sec.2.

For more information see these web sites: Alpine: www.alpineitw.com; TPI: www.tpinst.org; SBCA: www.sbcindustry.com; ICC: www.iccsafe.org

ALPINE AN ITW COMPANY
6750 Forum Drive
Suite 305
Orlando FL, 32821

SEQN: 65953 COMN	Ply: 1	**Job Number:** b51385aa	Cust: R 857 JRef:1WYP8570001 T49
FROM: RNB	Qty: 1	-terrell floor plan Trademark Const Group	DrwNo: 259.20.1004.09010
Page 1 of 2		**Truss Label:** T-23	SSB / DF 09/15/2020

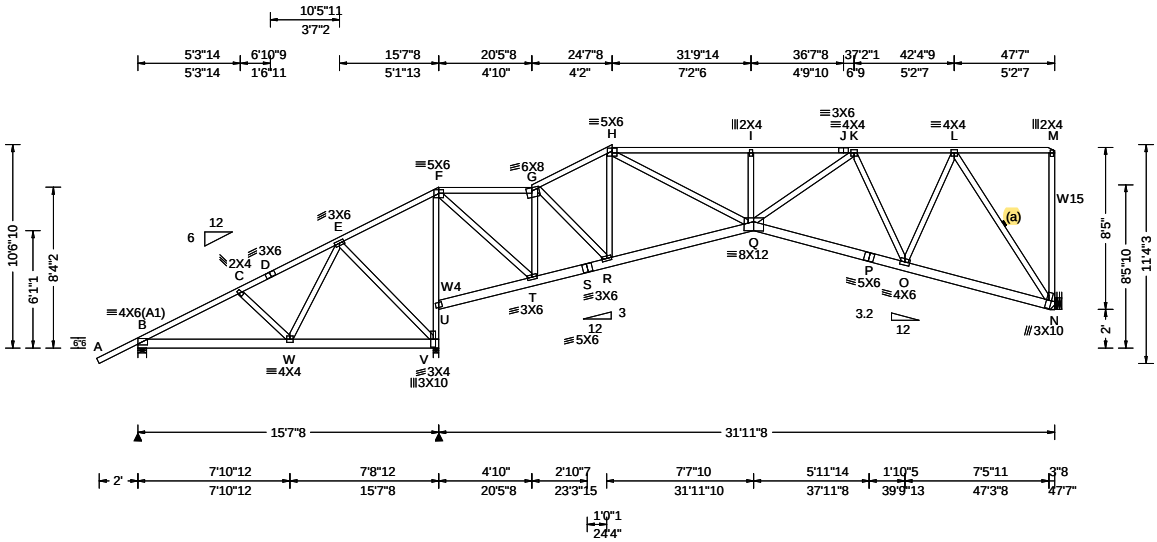

Loading Criteria (psf)	Wind Criteria	Snow Criteria (Pg,Pf in PSF)	Defl/CSI Criteria
TCLL: 20.00	Wind Std: ASCE 7-10	Pg: NA Ct: NA CAT: NA	PP Deflection in loc L/defl L/#
TCDL: 7.00	Speed: 130 mph	Pf: NA Ce: NA	VERT(LL): 0.126 I 999 360
BCLL: 0.00	Enclosure: Closed	Lu: NA Cs: NA	VERT(CL): 0.238 I 999 240
BCDL: 10.00	Risk Category: II	Snow Duration: NA	HORZ(LL): -0.044 U - -
Des Ld: 37.00	EXP: B Kzt: NA		HORZ(TL): 0.083 U - -
NCBCLL: 10.00	Mean Height: 15.10 ft	Building Code:	Creep Factor: 2.0
Soffit: 2.00	TCDL: 0.0 psf	FBC 2017 RES	Max TC CSI: 0.769
Load Duration: 1.25	BCDL: 0.0 psf	TPI Std: 2014	Max BC CSI: 0.746
Spacing: 24.0 "	MWFRS Parallel Dist: > 2h	Rep Fac: Yes	Max Web CSI: 0.831
	C&C Dist a: 4.76 ft	FT/RT:20(0)/0(0)	
	Loc. from endwall: not in 13.00 ft	Plate Type(s):	
	GCpi: 0.18	WAVE	VIEW Ver: 18.02.01A.0205.19
	Wind Duration: 1.60		

▲ Maximum Reactions (lbs)

Loc	Gravity R+	/ R-	/ Rh	Non-Gravity / Rw	/ U	/ RL
B	678	/-	/-	/350	/139	/291
V	1910	/-	/-	/1067	/596	/-
N	1192	/-	/-	/555	/355	/-

Wind reactions based on MWFRS
B Brg Width = 5.5 Min Req = 1.5
V Brg Width = 3.5 Min Req = 2.4
N Brg Width = - Min Req = -
Bearings B & V Fcperp = 425psi.
Members not listed have forces less than 375#

Maximum Top Chord Forces Per Ply (lbs)

Chords	Tens.	Comp.	Chords	Tens.	Comp.
B - C	318	- 747	G - H	827	- 1476
C - D	271	- 556	H - I	1211	- 2435
D - E	271	- 515	I - J	1201	- 2419
E - F	230	- 460	J - K	1201	- 2419
F - G	630	- 934	K - L	649	- 1175

Maximum Bot Chord Forces Per Ply (lbs)

Chords	Tens.	Comp.	Chords	Tens.	Comp.
B - W	612	- 326	Q - P	1638	- 872
T - S	958	- 485	P - O	1606	- 872
S - R	963	- 485	O - N	838	- 491
R - Q	1351	- 734			

Maximum Web Forces Per Ply (lbs)

Webs	Tens.	Comp.	Webs	Tens.	Comp.
W - E	451	- 131	H - Q	1298	- 638
E - V	334	- 555	I - Q	245	- 393
V - U	888	- 1449	Q - K	1070	- 529
U - F	866	- 1339	K - O	517	- 991
F - T	1460	- 723	O - L	976	- 415
G - T	647	- 1226	L - N	710	- 1454
G - R	513	- 326			

Lumber

Top chord: 2x4 SP #1;
Bot chord: 2x6 SP #1;
Webs: 2x4 SP #3; W4 2x4 SP SS Dense;
W15 2x4 SP #1;

Bracing

(a) Continuous lateral restraint equally spaced on member. Or 2x6 #3 or better "T" reinforcement. 80% length of web member. Attached with 10d Box or Gun (0.128"x3",min.)nails @ 6" oc.

Plating Notes

Plates sized for a minimum of 3.50 sq.in./piece.

Purlins

In lieu of structural panels or rigid ceiling use purlins to laterally brace chords as follows:

Chord	Spacing(in oc)	Start(ft)	End(ft)
TC	75	-2.07	15.62
TC	24	15.62	20.46
TC	56	20.46	24.62
TC	24	24.62	47.53
BC	120	0.15	15.33
BC	75	15.41	31.97
BC	120	31.97	47.58

Apply purlins to any chords above or below fillers at 24" OC unless shown otherwise above.

Wind

Wind loads based on MWFRS with additional C&C member design.

Right end vertical exposed to wind pressure.
Deflection meets L/180.

Additional Notes

WARNING: Furnish a copy of this DWG to the installation contractor. Special care must be taken during handling, shipping and installation of trusses. See "WARNING" note below.

Shim all supports to solid bearing.

DOUGLAS FLEMING LICENSE No. 66648 STATE OF FLORIDA PROFESSIONAL ENGINEER

COA #0 278

09/15/2020

****WARNING**** READ AND FOLLOW ALL NOTES ON THIS DRAWING!
****IMPORTANT**** FURNISH THIS DRAWING TO ALL CONTRACTORS INCLUDING THE INSTALLERS

Trusses require extreme care in fabricating, handling, shipping, installing and bracing. Refer to and follow the latest edition of BCSI (Building Component Safety Information, by TPI and SBCA) for safety practices prior to performing these functions. Installers shall provide temporary bracing per BCSI. Unless noted otherwise, top chord shall have properly attached structural sheathing and bottom chord shall have a properly attached rigid ceiling. Locations shown for permanent lateral restraint of webs shall have bracing installed per BCSI sections B3, B7, or B10, as applicable. Apply plates to each face of truss and position as shown above and on the Joint Details, unless noted otherwise. Refer to drawings 160A-Z for standard plate positions. Refer to job's General Notes page for additional information.

Alpine, a division of ITW Building Components Group Inc. shall not be responsible for any deviation from this drawing, any failure to build the truss in conformance with ANSI/TPI 1, or for handling, shipping, installation and bracing of trusses. A seal on this drawing or cover page listing this drawing, indicates acceptance of professional engineering responsibility solely for the design shown. The suitability and use of this drawing for any structure is the responsibility of the Building Designer per ANSI/TPI 1 Sec.2.

For more information see these web sites: Alpine: www.alpineitw.com; TPI: www.tpinst.org; SBCA: www.sbcindustry.com; ICC: www.iccsafe.org

ALPINE AN ITW COMPANY
6750 Forum Drive
Suite 305
Orlando FL, 32821

Hangers / Ties

Simpson Construction Hardware is specified based on the most current information provided by Simpson Strong-Tie. Please refer to the most recent Simpson Strong-Tie catalog for additional information.

Recommended hanger connections are based on manufacturer tested capacities and calculations. Conditions may exist that require different connections than indicated. Refer to manufacturer publication for additional information.

Bearing at location x=47'4" uses the following support conditions: 47'4"
Bearing N (47'4", 12'1"2) HGUS26
Supporting Member: (3)2x8 SP SS Dense
(20) 0.148"x3" nails into supporting member,
(6) 0.148"x3" nails into supported member.

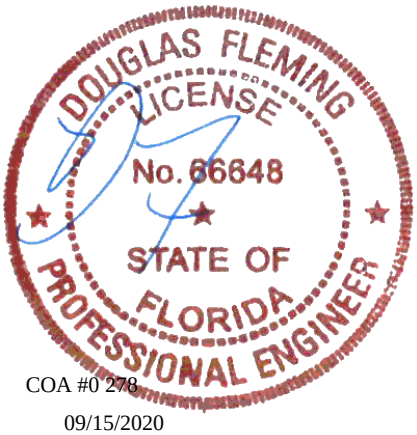

COA #0 278

09/15/2020

****WARNING**** READ AND FOLLOW ALL NOTES ON THIS DRAWING!
****IMPORTANT**** FURNISH THIS DRAWING TO ALL CONTRACTORS INCLUDING THE INSTALLERS

Trusses require extreme care in fabricating, handling, shipping, installing and bracing. Refer to and follow the latest edition of BCSI (Building Component Safety Information, by TPI and SBCA) for safety practices prior to performing these functions. Installers shall provide temporary bracing per BCSI. Unless noted otherwise, top chord shall have properly attached structural sheathing and bottom chord shall have a properly attached rigid ceiling. Locations shown for permanent lateral restraint of webs shall have bracing installed per BCSI sections B3, B7, or B10, as applicable. Apply plates to each face of truss and position as shown above and on the Joint Details, unless noted otherwise. Refer to drawings 160A-Z for standard plate positions. Refer to job's General Notes page for additional information.

Alpine, a division of ITW Building Components Group Inc. shall not be responsible for any deviation from this drawing, any failure to build the truss in conformance with ANSI/TPI 1, or for handling, shipping, installation and bracing of trusses. A seal on this drawing or cover page listing this drawing, indicates acceptance of professional engineering responsibility solely for the design shown. The suitability and use of this drawing for any structure is the responsibility of the Building Designer per ANSI/TPI 1 Sec.2.

For more information see these web sites: Alpine: www.alpineitw.com; TPI: www.tpinst.org; SBCA: www.sbcindustry.com; ICC: www.iccsafe.org

ALPINE AN ITW COMPANY
6750 Forum Drive
Suite 305
Orlando FL, 32821

SEQN: 65907 COMN FROM: RNB	Ply: 1 Qty: 1	**Job Number:** b51385aa -terrell floor plan Trademark Const Group **Truss Label:** T-24	Cust: R 857 JRef:1WYP8570001 T20 DrwNo: 259.20.1004.10523 SSB / DF 09/15/2020

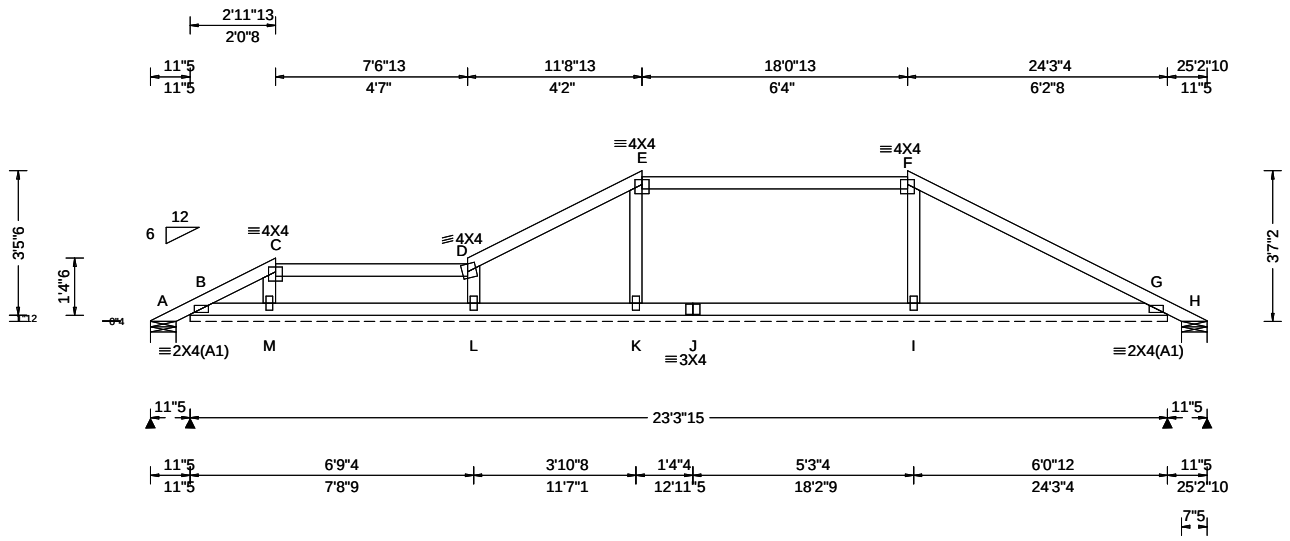

Loading Criteria (psf)

TCLL:	20.00
TCDL:	7.00
BCLL:	0.00
BCDL:	10.00
Des Ld:	37.00
NCBCLL:	0.00
Soffit:	2.00

Load Duration: 1.25
Spacing: 24.0 "

Wind Criteria
Wind Std: ASCE 7-10
Speed: 130 mph
Enclosure: Closed
Risk Category: II
EXP: B Kzt: NA
Mean Height: 15.00 ft
TCDL: 0.0 psf
BCDL: 0.0 psf
MWFRS Parallel Dist: > 2h
C&C Dist a: 3.00 ft
Loc. from endwall: not in 9.00 ft
GCpi: 0.18
Wind Duration: 1.60

Snow Criteria (Pg,Pf in PSF)
Pg: NA Ct: NA CAT: NA
Pf: NA Ce: NA
Lu: NA Cs: NA
Snow Duration: NA

Building Code:
FBC 2017 RES
TPI Std: 2014
Rep Fac: Yes
FT/RT:20(0)/0(0)
Plate Type(s):
WAVE

Defl/CSI Criteria

PP Deflection in	loc	L/defl	L/#
VERT(LL): 0.006	I	999	360
VERT(CL): 0.008	I	999	240
HORZ(LL): -0.003	I	-	-
HORZ(TL): 0.004	I	-	-

Creep Factor: 2.0
Max TC CSI: 0.516
Max BC CSI: 0.136
Max Web CSI: 0.073

VIEW Ver: 18.02.01A.0205.19

▲Maximum Reactions (lbs), or *=PLF

	Gravity			Non-Gravity		
Loc	R+	/ R-	/ Rh	/ Rw	/ U	/ RL
A	13	/-	/-	/31	/28	/60
B*	70	/-	/-	/40	/22	/-
H	-	/-191	/-	/74	/128	/-
L		/-109				
I		/-111				
G		/-158				

Wind reactions based on MWFRS
A Brg Width = 7.3 Min Req = 1.5
B Brg Width = 279 Min Req = -
H Brg Width = 7.3 Min Req = 1.5
Bearings A, B, & H are a rigid surface.
Members not listed have forces less than 375#

Lumber
Top chord: 2x4 SP #1;
Bot chord: 2x4 SP #1;
Webs: 2x4 SP #3;

Plating Notes
All plates are 2X4 except as noted.
Plates sized for a minimum of 3.50 sq.in./piece.

Purlins
In lieu of structural panels or rigid ceiling use purlins to laterally brace chords as follows:

Chord	Spacing(in oc)	Start(ft)	End(ft)
TC	36	-0.66	2.04
TC	24	2.04	6.62
TC	56	6.62	10.79
TC	24	10.79	17.12
TC	75	17.12	23.99
BC	120	0.15	23.18

Apply purlins to any chords above or below fillers at 24" OC unless shown otherwise above.

Wind
Wind loads based on MWFRS with additional C&C member design.

Additional Notes
Negative reaction(s) of -191# MAX. from a non-wind load case requires uplift connection. See Maximum Reactions.
Refer to DWG PB160101014 for piggyback details.

DOUGLAS FLEMING
LICENSE
No. 66648
STATE OF
FLORIDA
PROFESSIONAL ENGINEER

COA #0 278

09/15/2020

****WARNING**** READ AND FOLLOW ALL NOTES ON THIS DRAWING!
****IMPORTANT**** FURNISH THIS DRAWING TO ALL CONTRACTORS INCLUDING THE INSTALLERS

Trusses require extreme care in fabricating, handling, shipping, installing and bracing. Refer to and follow the latest edition of BCSI (Building Component Safety Information, by TPI and SBCA) for safety practices prior to performing these functions. Installers shall provide temporary bracing per BCSI. Unless noted otherwise, top chord shall have properly attached structural sheathing and bottom chord shall have a properly attached rigid ceiling. Locations shown for permanent lateral restraint of webs shall have bracing installed per BCSI sections B3, B7, or B10, as applicable. Apply plates to each face of truss and position as shown above and on the Joint Details, unless noted otherwise. Refer to drawings 160A-Z for standard plate positions. Refer to job's General Notes page for additional information.

Alpine, a division of ITW Building Components Group Inc. shall not be responsible for any deviation from this drawing, any failure to build the truss in conformance with ANSI/TPI 1, or for handling, shipping, installation and bracing of trusses. A seal on this drawing or cover page listing this drawing, indicates acceptance of professional engineering responsibility solely for the design shown. The suitability and use of this drawing for any structure is the responsibility of the Building Designer per ANSI/TPI 1 Sec.2.

For more information see these web sites: Alpine: www.alpineitw.com; TPI: www.tpinst.org; SBCA: www.sbcindustry.com; ICC: www.iccsafe.org

ALPINE
AN ITW COMPANY
6750 Forum Drive
Suite 305
Orlando FL, 32821

SEQN: 65908 COMN FROM: RNB	Ply: 1 Qty: 1	**Job Number:** b51385aa -terrell floor plan Trademark Const Group **Truss Label:** T-25	Cust: R 857 JRef:1WYP8570001 T54 DrwNo: 259.20.1004.12557 SSB / DF 09/15/2020

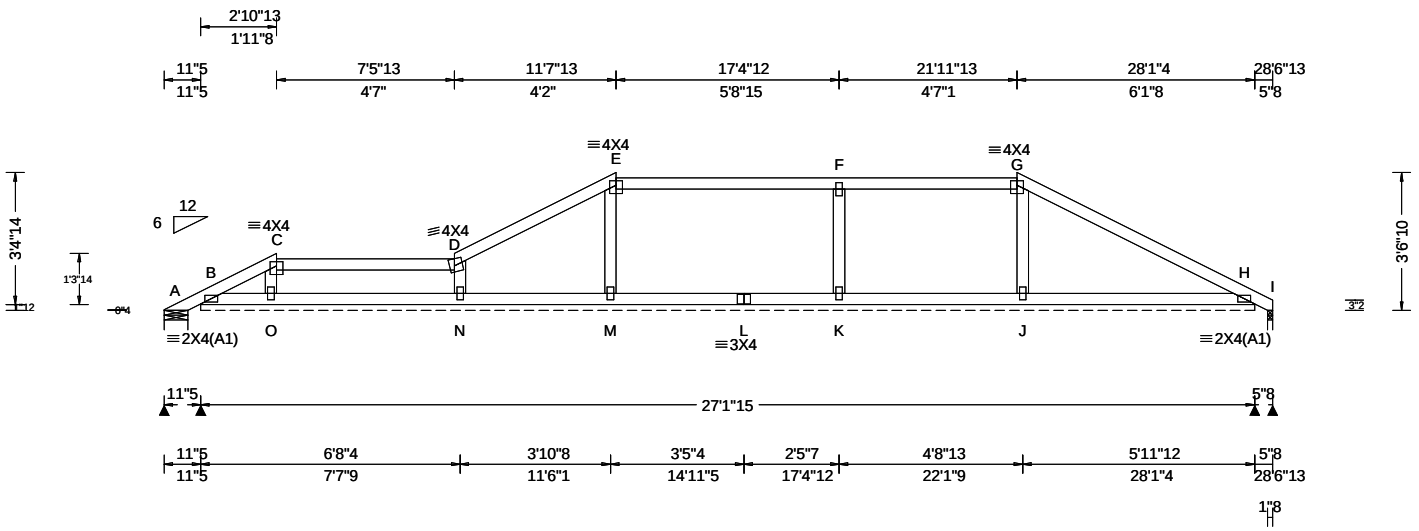

Loading Criteria (psf)

TCLL: 20.00
TCDL: 7.00
BCLL: 0.00
BCDL: 10.00
Des Ld: 37.00
NCBCLL: 0.00
Soffit: 2.00
Load Duration: 1.25
Spacing: 24.0 "

Wind Criteria

Wind Std: ASCE 7-10
Speed: 130 mph
Enclosure: Closed
Risk Category: II
EXP: B Kzt: NA
Mean Height: 15.00 ft
TCDL: 0.0 psf
BCDL: 0.0 psf
MWFRS Parallel Dist: > 2h
C&C Dist a: 3.00 ft
Loc. from endwall: not in 9.00 ft
GCpi: 0.18
Wind Duration: 1.60

Snow Criteria (Pg,Pf in PSF)

Pg: NA Ct: NA CAT: NA
Pf: NA Ce: NA
Lu: NA Cs: NA
Snow Duration: NA

Building Code:
FBC 2017 RES
TPI Std: 2014
Rep Fac: Yes
FT/RT:20(0)/0(0)
Plate Type(s):
WAVE

Defl/CSI Criteria

PP Deflection in	loc	L/defl	L/#
VERT(LL): 0.005	J	999	360
VERT(CL): 0.011	J	999	240
HORZ(LL): 0.003	J	-	-
HORZ(TL): 0.005	J	-	-

Creep Factor: 2.0
Max TC CSI: 0.309
Max BC CSI: 0.137
Max Web CSI: 0.086

VIEW Ver: 18.02.01A.0205.19

▲Maximum Reactions (lbs), or *=PLF

	Gravity			Non-Gravity		
Loc	R+	/ R-	/ Rh	/ Rw	/ U	/ RL
A	22	/-	/-	/30	/27	/58
B*	90	/-	/-	/41	/23	/-
I	-	/-298	/-	/102	/174	/-
N		/-229				
M		/-118				
K		/-220				
J		/-134				
H		/-356				

Wind reactions based on MWFRS
A Brg Width = 7.3 Min Req = 1.5
B Brg Width = 325 Min Req = -
I Brg Width = 1.5 Min Req = 1.5
Bearings A, B, & I are a rigid surface.
Members not listed have forces less than 375#

Lumber

Top chord: 2x4 SP #1;
Bot chord: 2x4 SP #1;
Webs: 2x4 SP #3;

Plating Notes

All plates are 2X4 except as noted.

Plates sized for a minimum of 3.50 sq.in./piece.

Purlins

In lieu of structural panels or rigid ceiling use purlins to laterally brace chords as follows:

Chord	Spacing(in oc)	Start(ft)	End(ft)
TC	35	-0.66	1.96
TC	24	1.96	6.54
TC	56	6.54	10.71
TC	24	10.71	21.04
TC	75	21.04	27.62
BC	120	0.15	27.02

Apply purlins to any chords above or below fillers at 24" OC unless shown otherwise above.

Wind

Wind loads based on MWFRS with additional C&C member design.

Additional Notes

Negative reaction(s) of -298# MAX. from a non-wind load case requires uplift connection. See Maximum Reactions.

Refer to DWG PB160101014 for piggyback details.

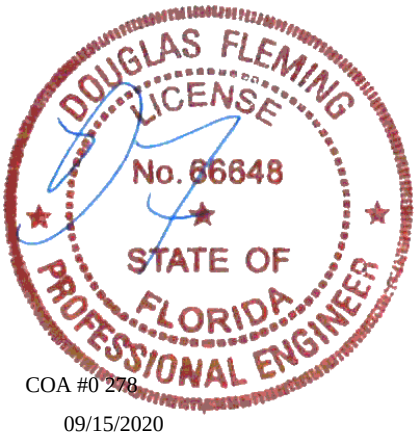

COA #0 278

09/15/2020

****WARNING**** READ AND FOLLOW ALL NOTES ON THIS DRAWING!
****IMPORTANT**** FURNISH THIS DRAWING TO ALL CONTRACTORS INCLUDING THE INSTALLERS

Trusses require extreme care in fabricating, handling, shipping, installing and bracing. Refer to and follow the latest edition of BCSI (Building Component Safety Information, by TPI and SBCA) for safety practices prior to performing these functions. Installers shall provide temporary bracing per BCSI. Unless noted otherwise, top chord shall have properly attached structural sheathing and bottom chord shall have a properly attached rigid ceiling. Locations shown for permanent lateral restraint of webs shall have bracing installed per BCSI sections B3, B7, or B10, as applicable. Apply plates to each face of truss and position as shown above and on the Joint Details, unless noted otherwise. Refer to drawings 160A-Z for standard plate positions. Refer to job's General Notes page for additional information.

Alpine, a division of ITW Building Components Group Inc. shall not be responsible for any deviation from this drawing, any failure to build the truss in conformance with ANSI/TPI 1, or for handling, shipping, installation and bracing of trusses. A seal on this drawing or cover page listing this drawing, indicates acceptance of professional engineering responsibility solely for the design shown. The suitability and use of this drawing for any structure is the responsibility of the Building Designer per ANSI/TPI 1 Sec.2.

For more information see these web sites: Alpine: www.alpineitw.com; TPI: www.tpinst.org; SBCA: www.sbcindustry.com; ICC: www.iccsafe.org

ALPINE
AN ITW COMPANY
6750 Forum Drive
Suite 305
Orlando FL, 32821

SEQN: 65909 COMN	Ply: 1	**Job Number:** b51385aa	Cust: R 857 JRef:1WYP8570001 T85
FROM: RNB	Qty: 1	-terrell floor plan Trademark Const Group	DrwNo: 259.20.1004.15400
Page 1 of 2		**Truss Label:** T-26	SSB / DF 09/15/2020

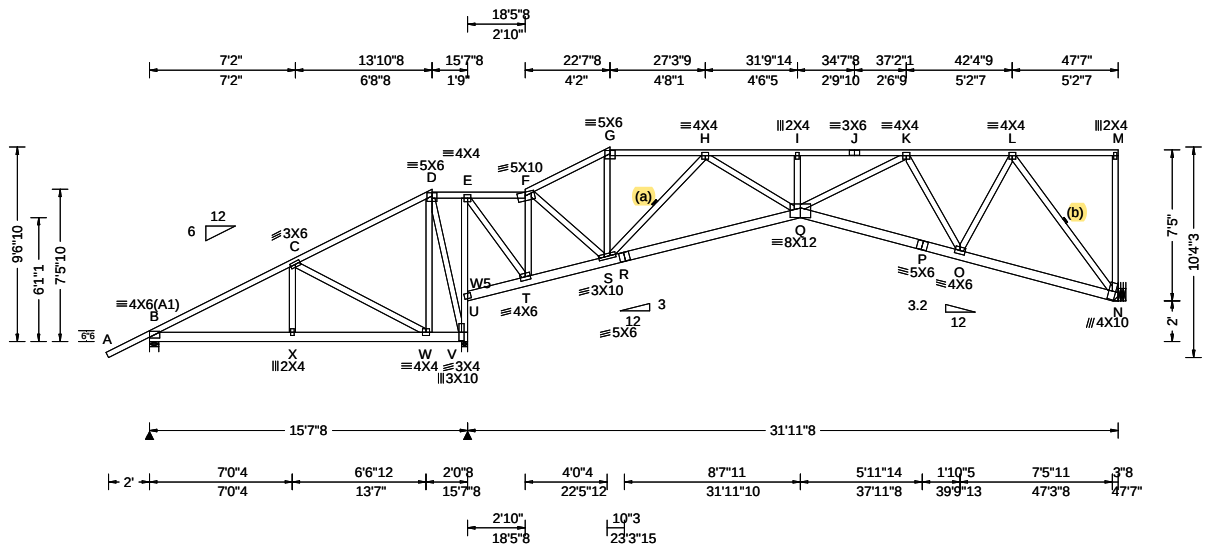

Loading Criteria (psf)

TCLL: 20.00
TCDL: 7.00
BCLL: 0.00
BCDL: 10.00
Des Ld: 37.00
NCBCLL: 10.00
Soffit: 2.00
Load Duration: 1.25
Spacing: 24.0 "

Wind Criteria

Wind Std: ASCE 7-10
Speed: 130 mph
Enclosure: Closed
Risk Category: II
EXP: B Kzt: NA
Mean Height: 15.00 ft
TCDL: 0.0 psf
BCDL: 0.0 psf
MWFRS Parallel Dist: > 2h
C&C Dist a: 4.76 ft
Loc. from endwall: not in 13.00 ft
GCpi: 0.18
Wind Duration: 1.60

Snow Criteria (Pg,Pf in PSF)

Pg: NA Ct: NA CAT: NA
Pf: NA Ce: NA
Lu: NA Cs: NA
Snow Duration: NA

Building Code:
FBC 2017 RES
TPI Std: 2014
Rep Fac: Yes
FT/RT:20(0)/0(0)
Plate Type(s):
WAVE

Defl/CSI Criteria

PP Deflection in	loc	L/defl	L/#
VERT(LL): 0.167	I	999	360
VERT(CL): 0.315	I	999	240
HORZ(LL): 0.056	N	-	-
HORZ(TL): 0.109	N	-	-

Creep Factor: 2.0
Max TC CSI: 0.685
Max BC CSI: 0.976
Max Web CSI: 0.930

VIEW Ver: 18.02.01A.0205.19

▲ Maximum Reactions (lbs)

Loc	Gravity R+	/ R-	/ Rh	Non-Gravity / Rw	/ U	/ RL
B	672	/-	/-	/354	/127	/261
V	1931	/-	/-	/1047	/588	/-
N	1187	/-	/-	/550	/366	/-

Wind reactions based on MWFRS
B Brg Width = 5.5 Min Req = 1.5
V Brg Width = 3.5 Min Req = 2.4
N Brg Width = - Min Req = -
Bearings B & V Fcperp = 425psi.
Members not listed have forces less than 375#

Maximum Top Chord Forces Per Ply (lbs)

Chords	Tens.	Comp.	Chords	Tens.	Comp.
B - C	252	- 709	H - I	1475	- 3177
E - F	419	- 534	I - J	1467	- 3164
F - G	720	- 1312	J - K	1467	- 3164
G - H	690	- 1129	K - L	720	- 1398

Maximum Bot Chord Forces Per Ply (lbs)

Chords	Tens.	Comp.	Chords	Tens.	Comp.
B - X	567	- 334	R - Q	2109	- 1090
X - W	564	- 334	Q - P	2001	- 1026
T - S	553	- 277	P - O	1969	- 1026
S - R	2066	- 1090	O - N	971	- 541

Maximum Web Forces Per Ply (lbs)

Webs	Tens.	Comp.	Webs	Tens.	Comp.
C - W	364	- 619	F - S	797	- 443
W - D	425	- 173	S - H	668	- 1345
D - V	453	- 595	H - Q	1360	- 639
V - U	673	- 1367	Q - K	1433	- 687
U - E	625	- 1240	K - O	578	- 1132
E - T	1239	- 608	O - L	1047	- 444
F - T	610	- 1208	L - N	750	- 1548

Lumber

Top chord: 2x4 SP #1;
Bot chord: 2x6 SP #1;
Webs: 2x4 SP #3; W5 2x4 SP SS Dense;

Bracing

(a) Continuous lateral restraint equally spaced on member. Or 1x4 #3SRB SPF-S or better "T" reinforcement. 80% length of web member. Attached with 8d Box or Gun (0.113"x2.5",min.)nails @ 6" oc.

(b) Continuous lateral restraint equally spaced on member. Or 2x6 #3 or better "T" reinforcement. 80% length of web member. Attached with 10d Box or Gun (0.128"x3",min.)nails @ 6" oc.

Plating Notes

Plates sized for a minimum of 3.50 sq.in./piece.

Purlins

In lieu of structural panels or rigid ceiling use purlins to laterally brace chords as follows:

Chord	Spacing(in oc)	Start(ft)	End(ft)
TC	75	-2.07	13.88
TC	24	13.88	18.46
TC	56	18.46	22.62
TC	24	22.62	47.58
BC	75	0.15	15.33
BC	75	15.42	31.97
BC	117	31.97	47.58

Apply purlins to any chords above or below fillers at 24" OC unless shown otherwise above.

Wind

Wind loads based on MWFRS with additional C&C member design.

Right end vertical exposed to wind pressure. Deflection meets L/180.

Additional Notes

WARNING: Furnish a copy of this DWG to the installation contractor. Special care must be taken during handling, shipping and installation of trusses. See "WARNING" note below.

Shim all supports to solid bearing.

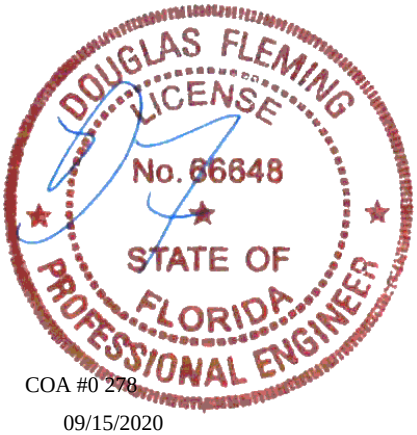

COA #0 278

09/15/2020

****WARNING**** READ AND FOLLOW ALL NOTES ON THIS DRAWING!
****IMPORTANT**** FURNISH THIS DRAWING TO ALL CONTRACTORS INCLUDING THE INSTALLERS

Trusses require extreme care in fabricating, handling, shipping, installing and bracing. Refer to and follow the latest edition of BCSI (Building Component Safety Information, by TPI and SBCA) for safety practices prior to performing these functions. Installers shall provide temporary bracing per BCSI. Unless noted otherwise, top chord shall have properly attached structural sheathing and bottom chord shall have a properly attached rigid ceiling. Locations shown for permanent lateral restraint of webs shall have bracing installed per BCSI sections B3, B7, or B10, as applicable. Apply plates to each face of truss and position as shown above and on the Joint Details, unless noted otherwise. Refer to drawings 160A-Z for standard plate positions. Refer to job's General Notes page for additional information.

Alpine, a division of ITW Building Components Group Inc. shall not be responsible for any deviation from this drawing, any failure to build the truss in conformance with ANSI/TPI 1, or for handling, shipping, installation and bracing of trusses. A seal on this drawing or cover page listing this drawing, indicates acceptance of professional engineering responsibility solely for the design shown. The suitability and use of this drawing for any structure is the responsibility of the Building Designer per ANSI/TPI 1 Sec.2.

For more information see these web sites: Alpine: www.alpineitw.com; TPI: www.tpinst.org; SBCA: www.sbcindustry.com; ICC: www.iccsafe.org

ALPINE AN ITW COMPANY
6750 Forum Drive
Suite 305
Orlando FL, 32821

Hangers / Ties

Simpson Construction Hardware is specified based on the most current information provided by Simpson Strong-Tie. Please refer to the most recent Simpson Strong-Tie catalog for additional information.

Recommended hanger connections are based on manufacturer tested capacities and calculations. Conditions may exist that require different connections than indicated. Refer to manufacturer publication for additional information.

Bearing at location x=47'4" uses the following support conditions: 47'4"
Bearing N (47'4", 12'1"2) HGUS26
Supporting Member: (3)2x8 SP SS Dense
(20) 0.148"x3" nails into supporting member,
(6) 0.148"x3" nails into supported member.

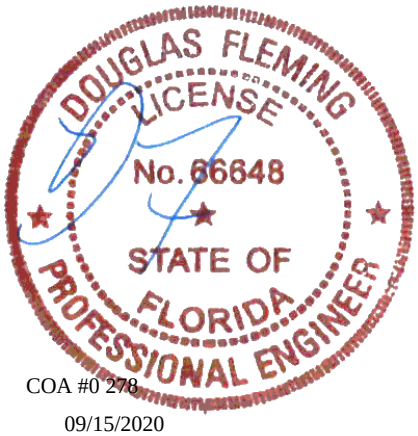

COA #0 278

09/15/2020

****WARNING**** READ AND FOLLOW ALL NOTES ON THIS DRAWING!
****IMPORTANT**** FURNISH THIS DRAWING TO ALL CONTRACTORS INCLUDING THE INSTALLERS

Trusses require extreme care in fabricating, handling, shipping, installing and bracing. Refer to and follow the latest edition of BCSI (Building Component Safety Information, by TPI and SBCA) for safety practices prior to performing these functions. Installers shall provide temporary bracing per BCSI. Unless noted otherwise, top chord shall have properly attached structural sheathing and bottom chord shall have a properly attached rigid ceiling. Locations shown for permanent lateral restraint of webs shall have bracing installed per BCSI sections B3, B7, or B10, as applicable. Apply plates to each face of truss and position as shown above and on the Joint Details, unless noted otherwise. Refer to drawings 160A-Z for standard plate positions. Refer to job's General Notes page for additional information.

Alpine, a division of ITW Building Components Group Inc. shall not be responsible for any deviation from this drawing, any failure to build the truss in conformance with ANSI/TPI 1, or for handling, shipping, installation and bracing of trusses. A seal on this drawing or cover page listing this drawing, indicates acceptance of professional engineering responsibility solely for the design shown. The suitability and use of this drawing for any structure is the responsibility of the Building Designer per ANSI/TPI 1 Sec.2.

For more information see these web sites: Alpine: www.alpineitw.com; TPI: www.tpinst.org; SBCA: www.sbcindustry.com; ICC: www.iccsafe.org

ALPINE AN ITW COMPANY
6750 Forum Drive
Suite 305
Orlando FL, 32821

SEQN: 65950 COMN	Ply: 1	**Job Number:** b51385aa	Cust: R 857 JRef:1WYP8570001 T71
FROM: RNB	Qty: 1	-terrell floor plan Trademark Const Group	DrwNo: 259.20.1004.19380
Page 1 of 2		**Truss Label:** T-27	SSB / DF 09/15/2020

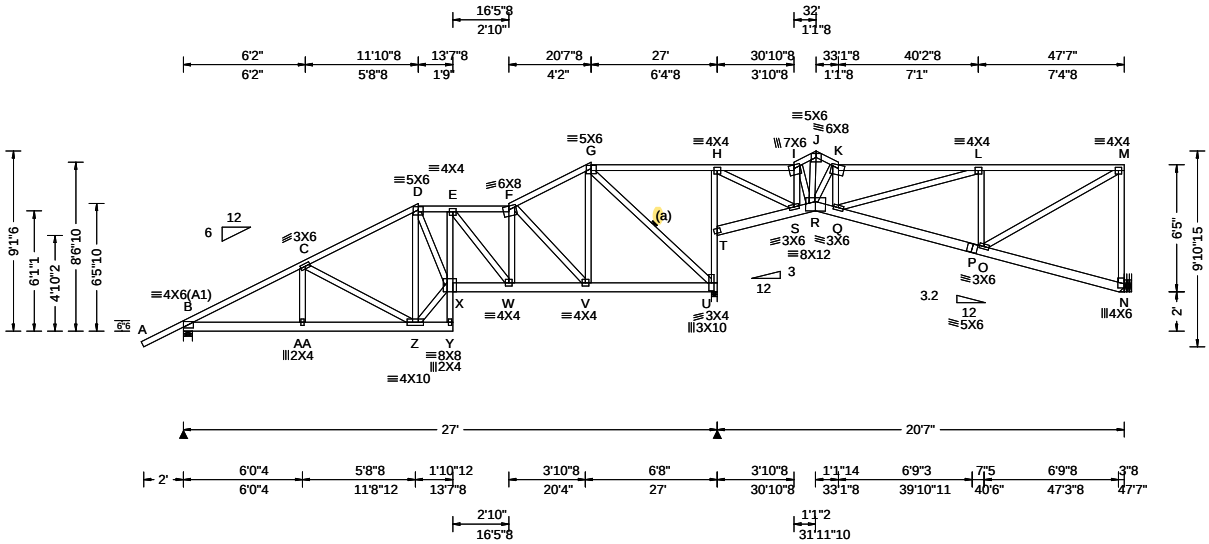

Loading Criteria (psf)

TCLL: 20.00
TCDL: 7.00
BCLL: 0.00
BCDL: 10.00
Des Ld: 37.00
NCBCLL: 10.00
Soffit: 2.00
Load Duration: 1.25
Spacing: 24.0 "

Wind Criteria

Wind Std: ASCE 7-10
Speed: 130 mph
Enclosure: Closed
Risk Category: II
EXP: B Kzt: NA
Mean Height: 15.00 ft
TCDL: 0.0 psf
BCDL: 0.0 psf
MWFRS Parallel Dist: > 2h
C&C Dist a: 4.76 ft
Loc. from endwall: not in 13.00 ft
GCpi: 0.18
Wind Duration: 1.60

Snow Criteria (Pg,Pf in PSF)

Pg: NA Ct: NA CAT: NA
Pf: NA Ce: NA
Lu: NA Cs: NA
Snow Duration: NA

Building Code:
FBC 2017 RES
TPI Std: 2014
Rep Fac: Yes
FT/RT:20(0)/0(0)
Plate Type(s):
WAVE

Defl/CSI Criteria

PP Deflection in	loc	L/defl	L/#
VERT(LL): 0.085	X	999	360
VERT(CL): 0.162	X	999	240
HORZ(LL): 0.035	U	-	-
HORZ(TL): 0.068	U	-	-

Creep Factor: 2.0
Max TC CSI: 0.999
Max BC CSI: 0.406
Max Web CSI: 0.991

VIEW Ver: 18.02.01A.0205.19

▲ Maximum Reactions (lbs)

	Gravity			Non-Gravity		
Loc	R+	/ R-	/ Rh	/ Rw	/ U	/ RL
B	1125	/-	/-	/632	/219	/238
U	1864	/-	/-	/952	/475	/-
N	767	/-	/-	/367	/219	/-

Wind reactions based on MWFRS
B Brg Width = 5.5 Min Req = 1.5
U Brg Width = 3.5 Min Req = 2.3
N Brg Width = - Min Req = -
Bearings B & U Fcperp = 425psi.
Members not listed have forces less than 375#

Maximum Top Chord Forces Per Ply (lbs)

Chords	Tens.	Comp.	Chords	Tens.	Comp.
B - C	725	- 1647	H - I	551	- 958
C - D	655	- 1279	I - J	624	- 1161
D - E	920	- 1678	J - K	658	- 1190
E - F	865	- 1490	K - L	759	- 1394
F - G	562	- 895	L - M	540	- 930

Maximum Bot Chord Forces Per Ply (lbs)

Chords	Tens.	Comp.	Chords	Tens.	Comp.
B -AA	1408	- 897	S - R	963	- 447
AA- Z	1407	- 898	R - Q	1428	- 690
X - W	1690	- 1052	Q - P	1014	- 521
W - V	1489	- 883	P - O	978	- 521
V - U	705	- 427			

Maximum Web Forces Per Ply (lbs)

Webs	Tens.	Comp.	Webs	Tens.	Comp.
C - Z	219	- 375	H - S	1170	- 552
Z - D	721	- 986	I - S	393	- 768
Z - X	1719	- 1125	R - J	1096	- 591
D - X	1424	- 808	R - K	428	- 781
F - V	625	- 1067	Q - L	448	- 207
V - G	901	- 452	L - O	366	- 627
G - U	676	- 1095	O - M	1079	- 494
U - T	551	- 1039	M - N	358	- 708
T - H	528	- 949			

Lumber

Top chord: 2x4 SP #1;
Bot chord: 2x6 SP #1;
Webs: 2x4 SP #3;

Bracing

(a) Continuous lateral restraint equally spaced on member. Or 1x4 #3SRB SPF-S or better "T" reinforcement. 80% length of web member. Attached with 8d Box or Gun (0.113"x2.5",min.)nails @ 6" oc.

Plating Notes

Plates sized for a minimum of 3.50 sq.in./piece.

Purlins

In lieu of structural panels or rigid ceiling use purlins to laterally brace chords as follows:

Chord	Spacing(in oc)	Start(ft)	End(ft)
TC	55	-2.07	11.88
TC	24	11.88	16.46
TC	56	16.46	20.62
TC	24	20.62	30.87
TC	15	30.87	32.00
TC	15	32.00	33.12
TC	24	33.12	47.58
BC	120	0.15	13.48
BC	120	13.53	26.71
BC	63	26.85	31.97
BC	75	31.97	47.58

Apply purlins to any chords above or below fillers at 24" OC unless shown otherwise above.

Wind

Wind loads based on MWFRS with additional C&C member design.

Right end vertical exposed to wind pressure. Deflection meets L/180.

Additional Notes

WARNING: Furnish a copy of this DWG to the installation contractor. Special care must be taken during handling, shipping and installation of trusses. See "WARNING" note below.

Shim all supports to solid bearing.

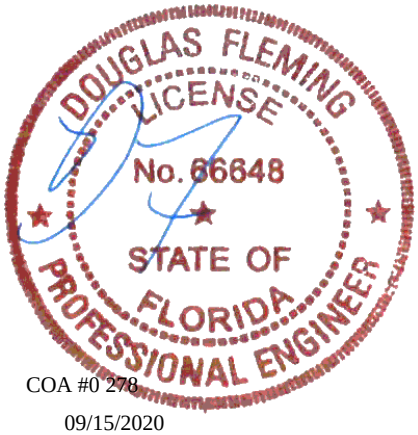

COA #0 278

09/15/2020

****WARNING**** READ AND FOLLOW ALL NOTES ON THIS DRAWING!
****IMPORTANT**** FURNISH THIS DRAWING TO ALL CONTRACTORS INCLUDING THE INSTALLERS

Trusses require extreme care in fabricating, handling, shipping, installing and bracing. Refer to and follow the latest edition of BCSI (Building Component Safety Information, by TPI and SBCA) for safety practices prior to performing these functions. Installers shall provide temporary bracing per BCSI. Unless noted otherwise, top chord shall have properly attached structural sheathing and bottom chord shall have a properly attached rigid ceiling. Locations shown for permanent lateral restraint of webs shall have bracing installed per BCSI sections B3, B7, or B10, as applicable. Apply plates to each face of truss and position as shown above and on the Joint Details, unless noted otherwise. Refer to drawings 160A-Z for standard plate positions. Refer to job's General Notes page for additional information.

Alpine, a division of ITW Building Components Group Inc. shall not be responsible for any deviation from this drawing, any failure to build the truss in conformance with ANSI/TPI 1, or for handling, shipping, installation and bracing of trusses. A seal on this drawing or cover page listing this drawing, indicates acceptance of professional engineering responsibility solely for the design shown. The suitability and use of this drawing for any structure is the responsibility of the Building Designer per ANSI/TPI 1 Sec.2.

For more information see these web sites: Alpine: www.alpineitw.com; TPI: www.tpinst.org; SBCA: www.sbcindustry.com; ICC: www.iccsafe.org

ALPINE AN ITW COMPANY
6750 Forum Drive
Suite 305
Orlando FL, 32821

Hangers / Ties

Simpson Construction Hardware is specified based on the most current information provided by Simpson Strong-Tie. Please refer to the most recent Simpson Strong-Tie catalog for additional information.

Recommended hanger connections are based on manufacturer tested capacities and calculations. Conditions may exist that require different connections than indicated. Refer to manufacturer publication for additional information.

Bearing at location x=47'4" uses the following support conditions: 47'4"
Bearing N (47'4", 12'1"2) LUS26
Supporting Member: (3)2x8 SP SS Dense
(4) 0.148"x3" nails into supporting member,
(3) 0.148"x3" nails into supported member.

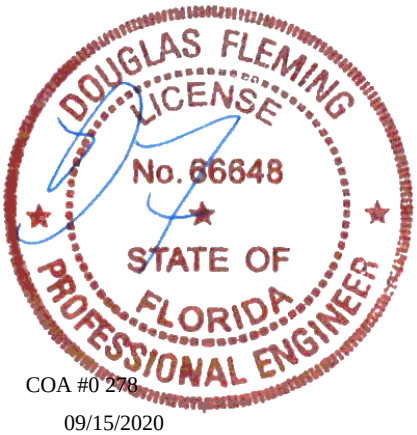

COA #0 278

09/15/2020

****WARNING**** READ AND FOLLOW ALL NOTES ON THIS DRAWING!
****IMPORTANT**** FURNISH THIS DRAWING TO ALL CONTRACTORS INCLUDING THE INSTALLERS

Trusses require extreme care in fabricating, handling, shipping, installing and bracing. Refer to and follow the latest edition of BCSI (Building Component Safety Information, by TPI and SBCA) for safety practices prior to performing these functions. Installers shall provide temporary bracing per BCSI. Unless noted otherwise, top chord shall have properly attached structural sheathing and bottom chord shall have a properly attached rigid ceiling. Locations shown for permanent lateral restraint of webs shall have bracing installed per BCSI sections B3, B7, or B10, as applicable. Apply plates to each face of truss and position as shown above and on the Joint Details, unless noted otherwise. Refer to drawings 160A-Z for standard plate positions. Refer to job's General Notes page for additional information.

Alpine, a division of ITW Building Components Group Inc. shall not be responsible for any deviation from this drawing, any failure to build the truss in conformance with ANSI/TPI 1, or for handling, shipping, installation and bracing of trusses. A seal on this drawing or cover page listing this drawing, indicates acceptance of professional engineering responsibility solely for the design shown. The suitability and use of this drawing for any structure is the responsibility of the Building Designer per ANSI/TPI 1 Sec.2.

For more information see these web sites: Alpine: www.alpineitw.com; TPI: www.tpinst.org; SBCA: www.sbcindustry.com; ICC: www.iccsafe.org

ALPINE AN ITW COMPANY
6750 Forum Drive
Suite 305
Orlando FL, 32821

SEQN: 65911 COMN FROM: RNB	Ply: 1 Qty: 1	**Job Number:** b51385aa -terrell floor plan Trademark Const Group **Truss Label:** T-28	Cust: R 857 JRef:1WYP8570001 T30 DrwNo: 259.20.1004.21480 SSB / DF 09/15/2020

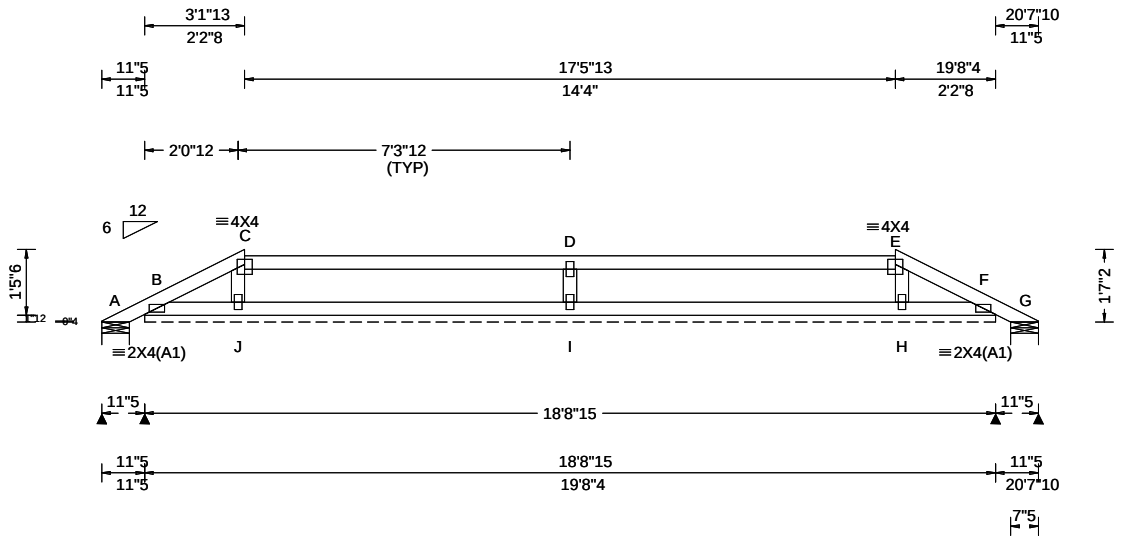

Loading Criteria (psf)
TCLL: 20.00
TCDL: 7.00
BCLL: 0.00
BCDL: 10.00
Des Ld: 37.00
NCBCLL: 0.00
Soffit: 2.00
Load Duration: 1.25
Spacing: 24.0 "

Wind Criteria
Wind Std: ASCE 7-10
Speed: 130 mph
Enclosure: Closed
Risk Category: II
EXP: B Kzt: NA
Mean Height: 15.00 ft
TCDL: 0.0 psf
BCDL: 0.0 psf
MWFRS Parallel Dist: > 2h
C&C Dist a: 3.00 ft
Loc. from endwall: not in 9.00 ft
GCpi: 0.18
Wind Duration: 1.60

Snow Criteria (Pg,Pf in PSF)
Pg: NA Ct: NA CAT: NA
Pf: NA Ce: NA
Lu: NA Cs: NA
Snow Duration: NA

Building Code:
FBC 2017 RES
TPI Std: 2014
Rep Fac: Yes
FT/RT:20(0)/0(0)
Plate Type(s):
WAVE

Defl/CSI Criteria

PP Deflection in	loc	L/defl	L/#
VERT(LL): 0.001	D	999	360
VERT(CL): 0.001	D	999	240
HORZ(LL): 0.001	H	-	-
HORZ(TL): 0.001	H	-	-

Creep Factor: 2.0
Max TC CSI: 0.505
Max BC CSI: 0.136
Max Web CSI: 0.091

VIEW Ver: 18.02.01A.0205.19

▲Maximum Reactions (lbs), or *=PLF

	Gravity			Non-Gravity		
Loc	R+	/ R-	/ Rh	/ Rw	/ U	/ RL
A	7	/-	/-	/18	/11	/25
B*	63	/-	/-	/36	/23	/-
G	7	/-	/-	/8	/2	/-
I		/-213				

Wind reactions based on MWFRS
A Brg Width = 7.3 Min Req = 1.5
B Brg Width = 224 Min Req = -
G Brg Width = 7.3 Min Req = 1.5
Bearings A, B, & G are a rigid surface.
Members not listed have forces less than 375#

Maximum Web Forces Per Ply (lbs)

Webs	Tens.	Comp.
D - I	305	-498

Lumber
Top chord: 2x4 SP #1;
Bot chord: 2x4 SP #1;
Webs: 2x4 SP #3;

Plating Notes
All plates are 2X4 except as noted.
Plates sized for a minimum of 3.50 sq.in./piece.

Purlins
In lieu of structural panels or rigid ceiling use purlins to laterally brace chords as follows:

Chord	Spacing(in oc)	Start(ft)	End(ft)
TC	38	-0.66	2.21
TC	24	2.21	16.54
TC	38	16.54	19.40
BC	75	0.15	18.60

Apply purlins to any chords above or below fillers at 24" OC unless shown otherwise above.

Wind
Wind loads based on MWFRS with additional C&C member design.

Additional Notes
Refer to DWG PB160101014 for piggyback details.

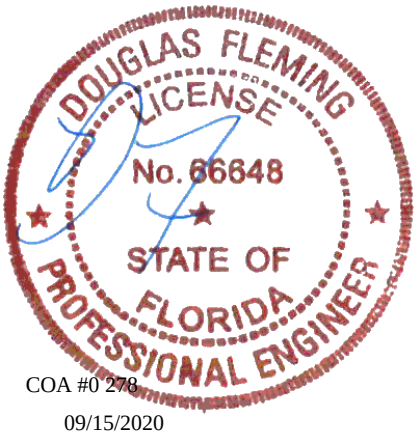

COA #0 278
09/15/2020

****WARNING**** READ AND FOLLOW ALL NOTES ON THIS DRAWING!
****IMPORTANT**** FURNISH THIS DRAWING TO ALL CONTRACTORS INCLUDING THE INSTALLERS

Trusses require extreme care in fabricating, handling, shipping, installing and bracing. Refer to and follow the latest edition of BCSI (Building Component Safety Information, by TPI and SBCA) for safety practices prior to performing these functions. Installers shall provide temporary bracing per BCSI. Unless noted otherwise, top chord shall have properly attached structural sheathing and bottom chord shall have a properly attached rigid ceiling. Locations shown for permanent lateral restraint of webs shall have bracing installed per BCSI sections B3, B7, or B10, as applicable. Apply plates to each face of truss and position as shown above and on the Joint Details, unless noted otherwise. Refer to drawings 160A-Z for standard plate positions. Refer to job's General Notes page for additional information.

Alpine, a division of ITW Building Components Group Inc. shall not be responsible for any deviation from this drawing, any failure to build the truss in conformance with ANSI/TPI 1, or for handling, shipping, installation and bracing of trusses. A seal on this drawing or cover page listing this drawing, indicates acceptance of professional engineering responsibility solely for the design shown. The suitability and use of this drawing for any structure is the responsibility of the Building Designer per ANSI/TPI 1 Sec.2.

For more information see these web sites: Alpine: www.alpineitw.com; TPI: www.tpinst.org; SBCA: www.sbcindustry.com; ICC: www.iccsafe.org

ALPINE
AN ITW COMPANY
6750 Forum Drive
Suite 305
Orlando FL, 32821

SEQN: 65948 COMN	Ply: 1	**Job Number:** b51385aa	Cust: R 857 JRef:1WYP8570001 T82
FROM: RNB	Qty: 1	-terrell floor plan Trademark Const Group	DrwNo: 259.20.0958.08773
Page 1 of 2		**Truss Label:** T-29	SSB / DF 09/15/2020

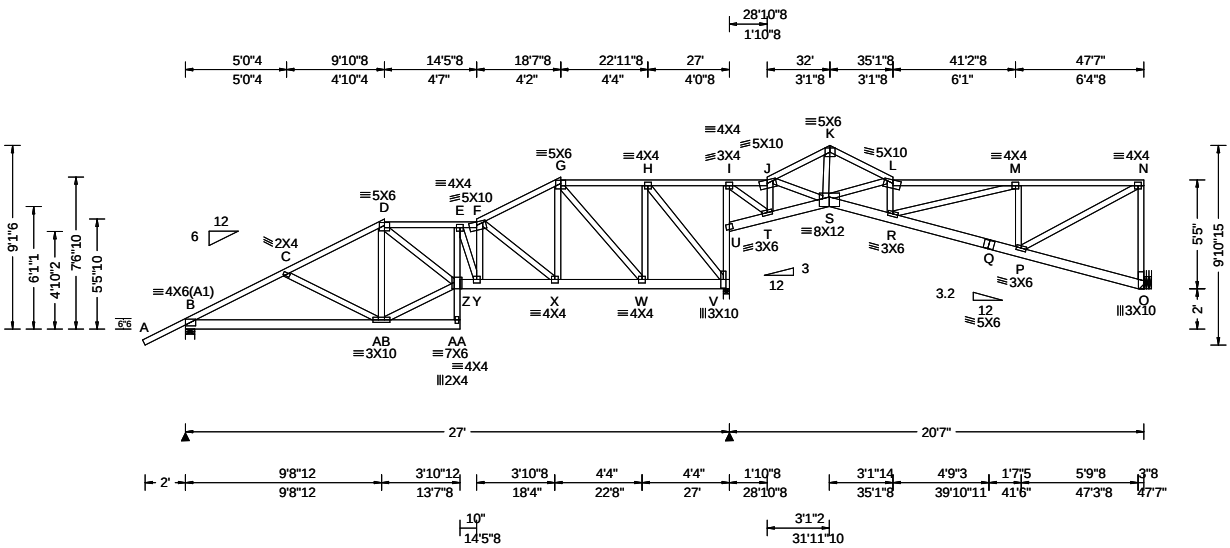

Loading Criteria (psf)

TCLL: 20.00
TCDL: 7.00
BCLL: 0.00
BCDL: 10.00
Des Ld: 37.00
NCBCLL: 10.00
Soffit: 2.00
Load Duration: 1.25
Spacing: 24.0 "

Wind Criteria

Wind Std: ASCE 7-10
Speed: 130 mph
Enclosure: Closed
Risk Category: II
EXP: B Kzt: NA
Mean Height: 15.00 ft
TCDL: 0.0 psf
BCDL: 0.0 psf
MWFRS Parallel Dist: > 2h
C&C Dist a: 4.76 ft
Loc. from endwall: not in 13.00 ft
GCpi: 0.18
Wind Duration: 1.60

Snow Criteria (Pg,Pf in PSF)

Pg: NA Ct: NA CAT: NA
Pf: NA Ce: NA
Lu: NA Cs: NA
Snow Duration: NA

Building Code:
FBC 2017 RES
TPI Std: 2014
Rep Fac: Yes
FT/RT:20(0)/0(0)
Plate Type(s):
WAVE

Defl/CSI Criteria

PP Deflection in	loc	L/defl	L/#
VERT(LL): 0.094	Z	999	360
VERT(CL): 0.181	Z	999	240
HORZ(LL): 0.030	V	-	-
HORZ(TL): 0.058	V	-	-

Creep Factor: 2.0
Max TC CSI: 0.959
Max BC CSI: 0.606
Max Web CSI: 0.841

VIEW Ver: 18.02.01A.0205.19

▲ Maximum Reactions (lbs)

Loc	Gravity R+	/ R-	/ Rh	Non-Gravity / Rw	/ U	/ RL
B	1130	/-	/-	/624	/226	/225
V	1853	/-	/-	/942	/441	/-
O	770	/-	/-	/368	/216	/-

Wind reactions based on MWFRS
B Brg Width = 5.5 Min Req = 1.5
V Brg Width = 3.5 Min Req = 2.3
O Brg Width = - Min Req = -
Bearings B & V Fcperp = 425psi.
Members not listed have forces less than 375#

Maximum Top Chord Forces Per Ply (lbs)

Chords	Tens.	Comp.	Chords	Tens.	Comp.
B - C	779	- 1669	I - J	427	- 604
C - D	688	- 1416	J - K	630	- 1214
D - E	1189	- 2216	K - L	631	- 1209
E - F	1144	- 2110	L - M	1068	- 1989
F - G	726	- 1285	M - N	584	- 1030
G - H	458	- 624			

Maximum Bot Chord Forces Per Ply (lbs)

Chords	Tens.	Comp.	Chords	Tens.	Comp.
B -AB	1435	- 957	T - S	602	- 290
Z - Y	2232	- 1314	S - R	2055	- 1040
Y - X	2105	- 1230	R - Q	1125	- 586
X - W	1057	- 629	Q - P	1099	- 586
W - V	585	- 317			

Maximum Web Forces Per Ply (lbs)

Webs	Tens.	Comp.	Webs	Tens.	Comp.
AB- D	352	- 420	I - T	921	- 465
AB- Z	1376	- 873	J - T	411	- 757
D - Z	1255	- 671	J - S	520	- 329
E - Y	281	- 419	S - K	901	- 442
F - X	729	- 1266	S - L	559	- 984
X - G	866	- 448	R - L	279	- 448
G - W	468	- 715	R - M	947	- 474
W - H	660	- 371	M - P	404	- 701
H - V	630	- 1095	P - N	1183	- 561
V - U	515	- 949	N - O	373	- 721
U - I	479	- 857			

Lumber

Top chord: 2x4 SP #1;
Bot chord: 2x6 SP #1;
Webs: 2x4 SP #3;

Plating Notes

Plates sized for a minimum of 3.50 sq.in./piece.

Purlins

In lieu of structural panels or rigid ceiling use purlins to laterally brace chords as follows:

Chord	Spacing(in oc)	Start(ft)	End(ft)
TC	54	-2.07	9.88
TC	24	9.88	14.46
TC	56	14.46	18.62
TC	24	18.62	28.87
TC	42	28.87	32.00
TC	42	32.00	35.12
TC	24	35.12	47.58
BC	120	0.15	13.48
BC	120	13.54	26.71
BC	63	26.87	31.97
BC	75	31.97	47.58

Apply purlins to any chords above or below fillers at 24" OC unless shown otherwise above.

Wind

Wind loads based on MWFRS with additional C&C member design.

Right end vertical exposed to wind pressure.
Deflection meets L/180.

Additional Notes

WARNING: Furnish a copy of this DWG to the installation contractor. Special care must be taken during handling, shipping and installation of trusses. See "WARNING" note below.

Shim all supports to solid bearing.

DOUGLAS FLEMING
LICENSE
No. 66648
STATE OF
FLORIDA
PROFESSIONAL ENGINEER

COA #0 278

09/15/2020

****WARNING**** READ AND FOLLOW ALL NOTES ON THIS DRAWING!
****IMPORTANT**** FURNISH THIS DRAWING TO ALL CONTRACTORS INCLUDING THE INSTALLERS

Trusses require extreme care in fabricating, handling, shipping, installing and bracing. Refer to and follow the latest edition of BCSI (Building Component Safety Information, by TPI and SBCA) for safety practices prior to performing these functions. Installers shall provide temporary bracing per BCSI. Unless noted otherwise, top chord shall have properly attached structural sheathing and bottom chord shall have a properly attached rigid ceiling. Locations shown for permanent lateral restraint of webs shall have bracing installed per BCSI sections B3, B7, or B10, as applicable. Apply plates to each face of truss and position as shown above and on the Joint Details, unless noted otherwise. Refer to drawings 160A-Z for standard plate positions. Refer to job's General Notes page for additional information.

Alpine, a division of ITW Building Components Group Inc. shall not be responsible for any deviation from this drawing, any failure to build the truss in conformance with ANSI/TPI 1, or for handling, shipping, installation and bracing of trusses. A seal on this drawing or cover page listing this drawing, indicates acceptance of professional engineering responsibility solely for the design shown. The suitability and use of this drawing for any structure is the responsibility of the Building Designer per ANSI/TPI 1 Sec.2.

For more information see these web sites: Alpine: www.alpineitw.com; TPI: www.tpinst.org; SBCA: www.sbcindustry.com; ICC: www.iccsafe.org

ALPINE AN ITW COMPANY
6750 Forum Drive
Suite 305
Orlando FL, 32821

Hangers / Ties

Simpson Construction Hardware is specified based on the most current information provided by Simpson Strong-Tie. Please refer to the most recent Simpson Strong-Tie catalog for additional information.

Recommended hanger connections are based on manufacturer tested capacities and calculations. Conditions may exist that require different connections than indicated. Refer to manufacturer publication for additional information.

Bearing at location x=47'4" uses the following support conditions: 47'4"
Bearing O (47'4", 12'1"2) LUS26
Supporting Member: (3)2x8 SP SS Dense
(4) 0.148"x3" nails into supporting member,
(3) 0.148"x3" nails into supported member.

DOUGLAS FLEMING
LICENSE
No. 66648
STATE OF
FLORIDA
PROFESSIONAL ENGINEER

COA #0 278

09/15/2020

****WARNING**** READ AND FOLLOW ALL NOTES ON THIS DRAWING!
****IMPORTANT**** FURNISH THIS DRAWING TO ALL CONTRACTORS INCLUDING THE INSTALLERS

Trusses require extreme care in fabricating, handling, shipping, installing and bracing. Refer to and follow the latest edition of BCSI (Building Component Safety Information, by TPI and SBCA) for safety practices prior to performing these functions. Installers shall provide temporary bracing per BCSI. Unless noted otherwise, top chord shall have properly attached structural sheathing and bottom chord shall have a properly attached rigid ceiling. Locations shown for permanent lateral restraint of webs shall have bracing installed per BCSI sections B3, B7, or B10, as applicable. Apply plates to each face of truss and position as shown above and on the Joint Details, unless noted otherwise. Refer to drawings 160A-Z for standard plate positions. Refer to job's General Notes page for additional information.

Alpine, a division of ITW Building Components Group Inc. shall not be responsible for any deviation from this drawing, any failure to build the truss in conformance with ANSI/TPI 1, or for handling, shipping, installation and bracing of trusses. A seal on this drawing or cover page listing this drawing, indicates acceptance of professional engineering responsibility solely for the design shown. The suitability and use of this drawing for any structure is the responsibility of the Building Designer per ANSI/TPI 1 Sec.2.

For more information see these web sites: Alpine: www.alpineitw.com; TPI: www.tpinst.org; SBCA: www.sbcindustry.com; ICC: www.iccsafe.org

ALPINE
AN ITW COMPANY
6750 Forum Drive
Suite 305
Orlando FL, 32821

SEQN: 65913 COMN FROM: RNB	Ply: 1 Qty: 1	**Job Number:** b51385aa -terrell floor plan Trademark Const Group **Truss Label:** T-3	Cust: R 857 JRef:1WYP8570001 T22 DrwNo: 259.20.0958.11013 SSB / DF 09/15/2020

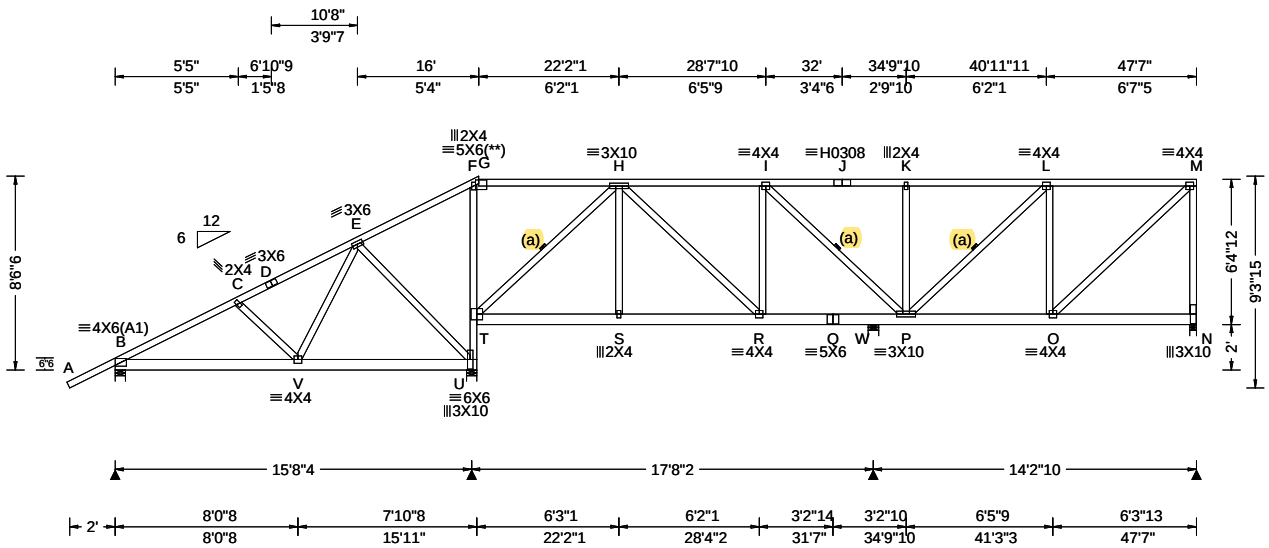

Loading Criteria (psf)

TCLL: 20.00
TCDL: 7.00
BCLL: 0.00
BCDL: 10.00
Des Ld: 37.00
NCBCLL: 10.00
Soffit: 2.00
Load Duration: 1.25
Spacing: 24.0 "

Wind Criteria

Wind Std: ASCE 7-10
Speed: 130 mph
Enclosure: Closed
Risk Category: II
EXP: B Kzt: NA
Mean Height: 15.00 ft
TCDL: 0.0 psf
BCDL: 0.0 psf
MWFRS Parallel Dist: h/2 to h
C&C Dist a: 4.76 ft
Loc. from endwall: not in 13.00 ft
GCpi: 0.18
Wind Duration: 1.60

Snow Criteria (Pg,Pf in PSF)

Pg: NA Ct: NA CAT: NA
Pf: NA Ce: NA
Lu: NA Cs: NA
Snow Duration: NA

Building Code:
FBC 2017 RES
TPI Std: 2014
Rep Fac: Yes
FT/RT:20(0)/0(0)
Plate Type(s):
WAVE, HS

Defl/CSI Criteria

PP Deflection in	loc	L/defl	L/#
VERT(LL): 0.036	I	999	360
VERT(CL): 0.067	I	999	240
HORZ(LL): -0.017	M	-	-
HORZ(TL): 0.031	M	-	-

Creep Factor: 2.0
Max TC CSI: 0.869
Max BC CSI: 0.514
Max Web CSI: 0.873

VIEW Ver: 18.02.01A.0205.19

▲Maximum Reactions (lbs)

Loc	Gravity R+	/ R-	/ Rh	Non-Gravity / Rw	/ U	/ RL
B	714	/-	/-	/400	/229	/228
U	1494	/-	/-	/816	/507	/-
W	743	/-	/0	/364	/242	/0
N	786	/-	/-	/358	/254	/-

Wind reactions based on MWFRS

B	Brg Width = 5.5	Min Req = 1.5
U	Brg Width = 5.5	Min Req = 1.9
W	Brg Width = 5.5	Min Req = 1.5
N	Brg Width = 3.5	Min Req = 1.5

Bearings B, U, W, & N Fcperp = 425psi.
Members not listed have forces less than 375#

Maximum Top Chord Forces Per Ply (lbs)

Chords	Tens.	Comp.	Chords	Tens.	Comp.
B - C	388	- 820	I - J	402	- 624
C - D	337	- 622	J - K	402	- 624
D - E	337	- 584	K - L	402	- 624
H - I	509	- 807	L - M	396	- 627

Maximum Bot Chord Forces Per Ply (lbs)

Chords	Tens.	Comp.	Chords	Tens.	Comp.
B - V	677	- 370	R - Q	815	- 411
T - S	697	- 327	Q - P	1631	- 822
S - R	695	- 327	P - O	646	- 363

Maximum Web Forces Per Ply (lbs)

Webs	Tens.	Comp.	Webs	Tens.	Comp.
V - E	456	- 134	I - P	156	- 387
E - U	299	- 532	L - O	241	- 384
U - T	631	- 1052	O - M	866	- 393
T - H	447	- 964	M - N	375	- 745

Lumber

Top chord: 2x4 SP #1;
Bot chord: 2x6 SP #1;
Webs: 2x4 SP #3;

Bracing

(a) Continuous lateral restraint equally spaced on member. Or 1x4 #3SRB SPF-S or better "T" reinforcement. 80% length of web member. Attached with 8d Box or Gun (0.113"x2.5",min.)nails @ 6" oc.

Plating Notes

(**) 1 plate(s) require special positioning. Refer to scaled plate plot details for special positioning requirements.

Plates sized for a minimum of 3.50 sq.in./piece.

Purlins

In lieu of structural panels or rigid ceiling use purlins to laterally brace chords as follows:

Chord	Spacing(in oc)	Start(ft)	End(ft)
TC	75	-2.07	16.00
TC	24	16.00	47.58
BC	120	0.15	15.62
BC	120	15.65	47.58

Apply purlins to any chords above or below fillers at 24" OC unless shown otherwise above.

Wind

Wind loads based on MWFRS with additional C&C member design.

Right end vertical exposed to wind pressure.
Deflection meets L/180.

Additional Notes

WARNING: Furnish a copy of this DWG to the installation contractor. Special care must be taken during handling, shipping and installation of trusses. See "WARNING" note below.

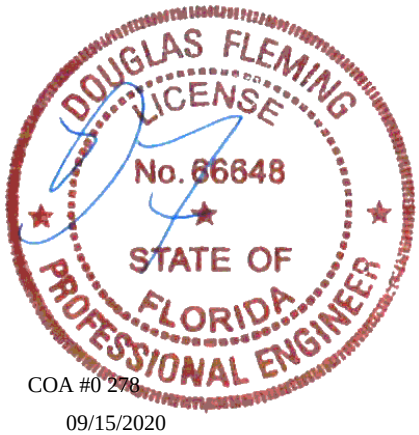

COA #0 278

09/15/2020

****WARNING**** READ AND FOLLOW ALL NOTES ON THIS DRAWING!
****IMPORTANT**** FURNISH THIS DRAWING TO ALL CONTRACTORS INCLUDING THE INSTALLERS

Trusses require extreme care in fabricating, handling, shipping, installing and bracing. Refer to and follow the latest edition of BCSI (Building Component Safety Information, by TPI and SBCA) for safety practices prior to performing these functions. Installers shall provide temporary bracing per BCSI. Unless noted otherwise, top chord shall have properly attached structural sheathing and bottom chord shall have a properly attached rigid ceiling. Locations shown for permanent lateral restraint of webs shall have bracing installed per BCSI sections B3, B7, or B10, as applicable. Apply plates to each face of truss and position as shown above and on the Joint Details, unless noted otherwise. Refer to drawings 160A-Z for standard plate positions. Refer to job's General Notes page for additional information.

Alpine, a division of ITW Building Components Group Inc. shall not be responsible for any deviation from this drawing, any failure to build the truss in conformance with ANSI/TPI 1, or for handling, shipping, installation and bracing of trusses. A seal on this drawing or cover page listing this drawing, indicates acceptance of professional engineering responsibility solely for the design shown. The suitability and use of this drawing for any structure is the responsibility of the Building Designer per ANSI/TPI 1 Sec.2.

For more information see these web sites: Alpine: www.alpineitw.com; TPI: www.tpinst.org; SBCA: www.sbcindustry.com; ICC: www.iccsafe.org

ALPINE AN ITW COMPANY
6750 Forum Drive
Suite 305
Orlando FL, 32821

SEQN: 65914 COMN FROM: RNB	Ply: 1 Qty: 1	**Job Number:** b51385aa -terrell floor plan Trademark Const Group **Truss Label:** T-30	Cust: R 857 JRef:1WYP8570001 T29 DrwNo: 259.20.0958.13110 SSB / DF 09/15/2020

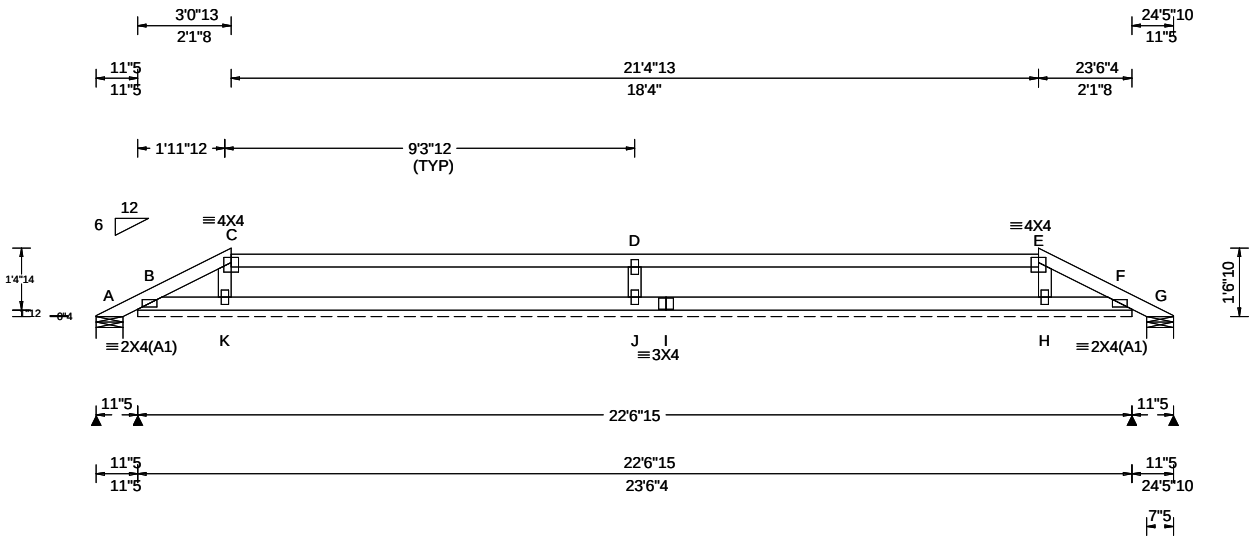

Loading Criteria (psf)

TCLL: 20.00
TCDL: 7.00
BCLL: 0.00
BCDL: 10.00
Des Ld: 37.00
NCBCLL: 0.00
Soffit: 2.00
Load Duration: 1.25
Spacing: 24.0 "

Wind Criteria

Wind Std: ASCE 7-10
Speed: 130 mph
Enclosure: Closed
Risk Category: II
EXP: B Kzt: NA
Mean Height: 15.00 ft
TCDL: 0.0 psf
BCDL: 0.0 psf
MWFRS Parallel Dist: > 2h
C&C Dist a: 3.00 ft
Loc. from endwall: not in 9.00 ft
GCpi: 0.18
Wind Duration: 1.60

Snow Criteria (Pg,Pf in PSF)

Pg: NA Ct: NA CAT: NA
Pf: NA Ce: NA
Lu: NA Cs: NA
Snow Duration: NA

Building Code:
FBC 2017 RES
TPI Std: 2014
Rep Fac: Yes
FT/RT:20(0)/0(0)
Plate Type(s):
WAVE

Defl/CSI Criteria

PP Deflection in	loc	L/defl	L/#
VERT(LL): 0.001	D	999	360
VERT(CL): 0.001	D	999	240
HORZ(LL): 0.001	H	-	-
HORZ(TL): 0.001	H	-	-

Creep Factor: 2.0
Max TC CSI: 0.861
Max BC CSI: 0.196
Max Web CSI: 0.115

VIEW Ver: 18.02.01A.0205.19

▲Maximum Reactions (lbs), or *=PLF

	Gravity			Non-Gravity		
Loc	R+	/ R-	/ Rh	/ Rw	/ U	/ RL
A	9	/-	/-	/24	/11	/24
B*	62	/-	/-	/35	/23	/-
G	9	/-	/-	/14	/2	/-
J		/-273				
H		/-99				

Wind reactions based on MWFRS
A Brg Width = 7.3 Min Req = 1.5
B Brg Width = 270 Min Req = -
G Brg Width = 7.3 Min Req = 1.5
Bearings A, B, & G are a rigid surface.
Members not listed have forces less than 375#

Maximum Web Forces Per Ply (lbs)

Webs	Tens.	Comp.
D - J	386	- 637

Lumber

Top chord: 2x4 SP #1;
Bot chord: 2x4 SP #1;
Webs: 2x4 SP #3;

Plating Notes

All plates are 2X4 except as noted.

Plates sized for a minimum of 3.50 sq.in./piece.

Purlins

In lieu of structural panels or rigid ceiling use purlins to laterally brace chords as follows:

Chord	Spacing(in oc)	Start(ft)	End(ft)
TC	37	-0.66	2.12
TC	24	2.12	20.46
TC	37	20.46	23.24
BC	75	0.15	22.43

Apply purlins to any chords above or below fillers at 24" OC unless shown otherwise above.

Wind

Wind loads based on MWFRS with additional C&C member design.

Additional Notes

Refer to DWG PB160101014 for piggyback details.

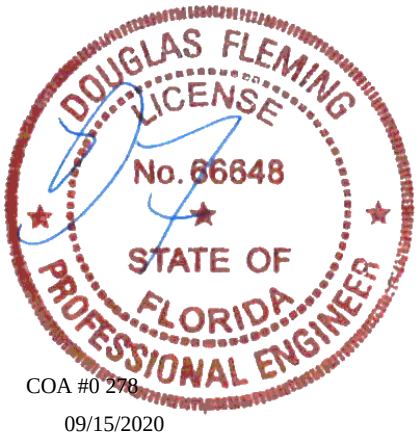

COA #0 278

09/15/2020

****WARNING**** READ AND FOLLOW ALL NOTES ON THIS DRAWING!
****IMPORTANT**** FURNISH THIS DRAWING TO ALL CONTRACTORS INCLUDING THE INSTALLERS

Trusses require extreme care in fabricating, handling, shipping, installing and bracing. Refer to and follow the latest edition of BCSI (Building Component Safety Information, by TPI and SBCA) for safety practices prior to performing these functions. Installers shall provide temporary bracing per BCSI. Unless noted otherwise, top chord shall have properly attached structural sheathing and bottom chord shall have a properly attached rigid ceiling. Locations shown for permanent lateral restraint of webs shall have bracing installed per BCSI sections B3, B7, or B10, as applicable. Apply plates to each face of truss and position as shown above and on the Joint Details, unless noted otherwise. Refer to drawings 160A-Z for standard plate positions. Refer to job's General Notes page for additional information.

Alpine, a division of ITW Building Components Group Inc. shall not be responsible for any deviation from this drawing, any failure to build the truss in conformance with ANSI/TPI 1, or for handling, shipping, installation and bracing of trusses. A seal on this drawing or cover page listing this drawing, indicates acceptance of professional engineering responsibility solely for the design shown. The suitability and use of this drawing for any structure is the responsibility of the Building Designer per ANSI/TPI 1 Sec.2.

For more information see these web sites: Alpine: www.alpineitw.com; TPI: www.tpinst.org; SBCA: www.sbcindustry.com; ICC: www.iccsafe.org

ALPINE AN ITW COMPANY
6750 Forum Drive
Suite 305
Orlando FL, 32821

SEQN: 65915 COMN	Ply: 1	**Job Number:** b51385aa	Cust: R 857 JRef:1WYP8570001 T44
FROM: RNB	Qty: 1	-terrell floor plan Trademark Const Group	DrwNo: 259.20.0958.17357
Page 1 of 2		**Truss Label:** T-31	SSB / DF 09/15/2020

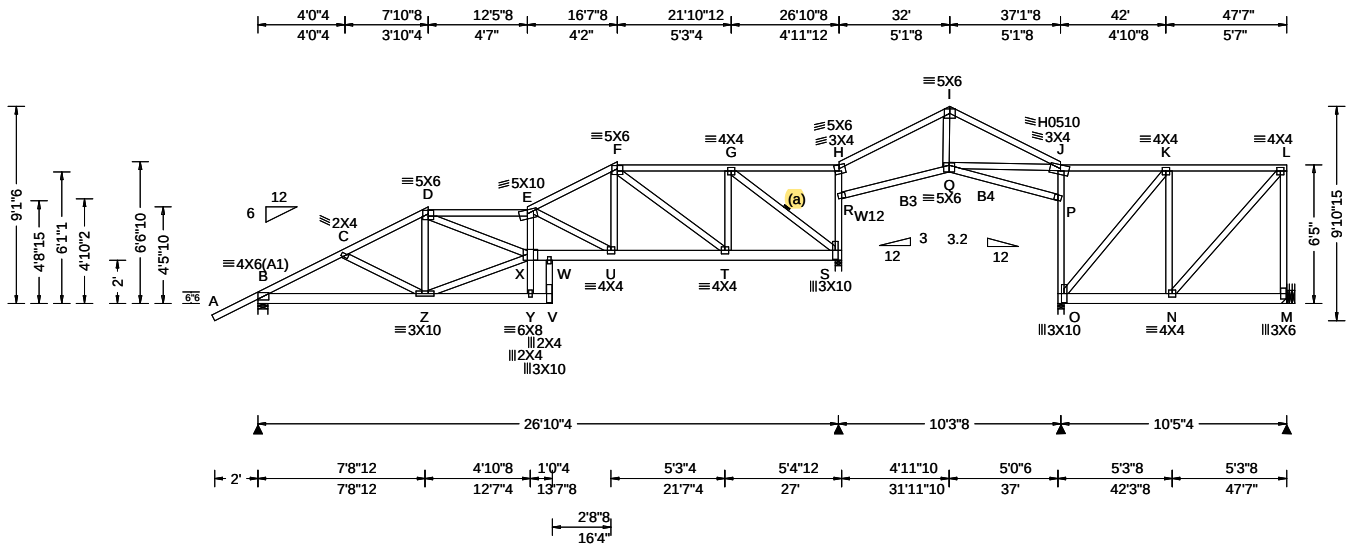

Loading Criteria (psf)

TCLL: 20.00
TCDL: 7.00
BCLL: 0.00
BCDL: 10.00
Des Ld: 37.00
NCBCLL: 10.00
Soffit: 2.00
Load Duration: 1.25
Spacing: 24.0 "

Wind Criteria

Wind Std: ASCE 7-10
Speed: 130 mph
Enclosure: Closed
Risk Category: II
EXP: B Kzt: NA
Mean Height: 15.00 ft
TCDL: 0.0 psf
BCDL: 0.0 psf
MWFRS Parallel Dist: > 2h
C&C Dist a: 4.76 ft
Loc. from endwall: not in 13.00 ft
GCpi: 0.18
Wind Duration: 1.60

Snow Criteria (Pg,Pf in PSF)

Pg: NA Ct: NA CAT: NA
Pf: NA Ce: NA
Lu: NA Cs: NA
Snow Duration: NA

Building Code:
FBC 2017 RES
TPI Std: 2014
Rep Fac: Yes
FT/RT:20(0)/0(0)
Plate Type(s):
WAVE, HS

Defl/CSI Criteria

PP Deflection in	loc	L/defl	L/#
VERT(LL): 0.161	X	999	360
VERT(CL): 0.300	X	999	240
HORZ(LL): 0.103	P	-	-
HORZ(TL): 0.196	P	-	-

Creep Factor: 2.0
Max TC CSI: 0.986
Max BC CSI: 0.992
Max Web CSI: 0.978

VIEW Ver: 18.02.01A.0205.19

▲ Maximum Reactions (lbs)

Loc	Gravity R+	/ R-	/ Rh	Non-Gravity / Rw	/ U	/ RL
B	1153	/-	/-	/630	/240	/238
S	1348	/-	/-	/699	/293	/-
O	879	/-	/-	/440	/233	/-
M	374	/-	/-	/204	/94	/-

Wind reactions based on MWFRS
B Brg Width = 5.5 Min Req = 1.5
S Brg Width = 3.5 Min Req = 1.7
O Brg Width = 3.5 Min Req = 1.5
M Brg Width = - Min Req = -
Bearings B, S, & O Fcperp = 425psi.
Members not listed have forces less than 375#

Maximum Top Chord Forces Per Ply (lbs)

Chords	Tens.	Comp.	Chords	Tens.	Comp.
B - C	831	- 1745	F - G	661	- 1084
C - D	784	- 1588	H - I	237	- 519
D - E	1699	- 3254	I - J	236	- 517
E - F	991	- 1882			

Maximum Bot Chord Forces Per Ply (lbs)

Chords	Tens.	Comp.	Chords	Tens.	Comp.
B - Z	1502	- 1027	U - T	1576	- 960
X - W	3291	- 1946	T - S	1045	- 605
W - U	3287	- 1945	R - Q	416	- 320

Maximum Web Forces Per Ply (lbs)

Webs	Tens.	Comp.	Webs	Tens.	Comp.
Z - D	314	- 381	G - S	685	- 1278
Z - X	1481	- 963	S - R	311	- 496
D - X	2002	- 1098	R - H	347	- 531
E - U	1070	- 1851	Q - J	445	- 354
U - F	963	- 502	J - P	314	- 505
F - T	435	- 648	P - O	338	- 584
T - G	520	- 269			

Lumber

Top chord: 2x4 SP #1;
Bot chord: 2x6 SP #1; B3,B4 2x4 SP #1;
Webs: 2x4 SP #3; W12 2x4 SP #1;

Bracing

(a) Continuous lateral restraint equally spaced on member. Or 1x4 #3SRB SPF-S or better "T" reinforcement. 80% length of web member. Attached with 8d Box or Gun (0.113"x2.5",min.)nails @ 6" oc.

Plating Notes

Plates sized for a minimum of 3.50 sq.in./piece.

Purlins

In lieu of structural panels or rigid ceiling use purlins to laterally brace chords as follows:

Chord	Spacing(in oc)	Start(ft)	End(ft)
TC	53	-2.07	7.88
TC	24	7.88	12.46
TC	55	12.46	16.62
TC	24	16.62	26.87
TC	69	26.87	32.00
TC	69	32.00	37.12
TC	24	37.12	47.58
BC	120	0.15	13.62
BC	111	12.53	26.71
BC	64	26.82	31.97
BC	64	31.97	37.16
BC	120	37.29	47.58

Apply purlins to any chords above or below fillers at 24" OC unless shown otherwise above.

Wind

Wind loads based on MWFRS with additional C&C member design.

Right end vertical exposed to wind pressure. Deflection meets L/180.

Additional Notes

WARNING: Furnish a copy of this DWG to the installation contractor. Special care must be taken during handling, shipping and installation of trusses. See "WARNING" note below.

DOUGLAS FLEMING LICENSE No. 66648 STATE OF FLORIDA PROFESSIONAL ENGINEER

COA #0 278

09/15/2020

****WARNING**** READ AND FOLLOW ALL NOTES ON THIS DRAWING!
****IMPORTANT**** FURNISH THIS DRAWING TO ALL CONTRACTORS INCLUDING THE INSTALLERS

Trusses require extreme care in fabricating, handling, shipping, installing and bracing. Refer to and follow the latest edition of BCSI (Building Component Safety Information, by TPI and SBCA) for safety practices prior to performing these functions. Installers shall provide temporary bracing per BCSI. Unless noted otherwise, top chord shall have properly attached structural sheathing and bottom chord shall have a properly attached rigid ceiling. Locations shown for permanent lateral restraint of webs shall have bracing installed per BCSI sections B3, B7, or B10, as applicable. Apply plates to each face of truss and position as shown above and on the Joint Details, unless noted otherwise. Refer to drawings 160A-Z for standard plate positions. Refer to job's General Notes page for additional information.

Alpine, a division of ITW Building Components Group Inc. shall not be responsible for any deviation from this drawing, any failure to build the truss in conformance with ANSI/TPI 1, or for handling, shipping, installation and bracing of trusses. A seal on this drawing or cover page listing this drawing, indicates acceptance of professional engineering responsibility solely for the design shown. The suitability and use of this drawing for any structure is the responsibility of the Building Designer per ANSI/TPI 1 Sec.2.

For more information see these web sites: Alpine: www.alpineitw.com; TPI: www.tpinst.org; SBCA: www.sbcindustry.com; ICC: www.iccsafe.org

ALPINE AN ITW COMPANY
6750 Forum Drive
Suite 305
Orlando FL, 32821

Hangers / Ties

Simpson Construction Hardware is specified based on the most current information provided by Simpson Strong-Tie. Please refer to the most recent Simpson Strong-Tie catalog for additional information.

Recommended hanger connections are based on manufacturer tested capacities and calculations. Conditions may exist that require different connections than indicated. Refer to manufacturer publication for additional information.

Bearing at location x=47'4" uses the following support conditions: 47'4"
Bearing M (47'4", 10'1"2) LUS24
Supporting Member: (3)2x8 SP SS Dense
(4) 0.148"x3" nails into supporting member,
(2) 0.148"x3" nails into supported member.

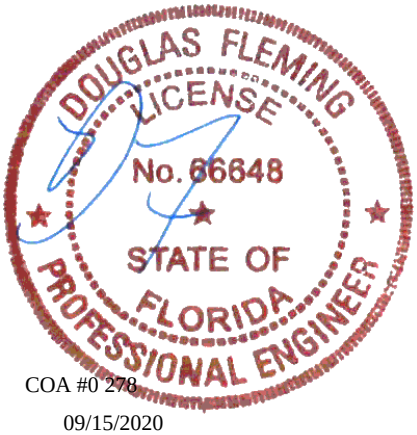

COA #0 278

09/15/2020

****WARNING**** READ AND FOLLOW ALL NOTES ON THIS DRAWING!
****IMPORTANT**** FURNISH THIS DRAWING TO ALL CONTRACTORS INCLUDING THE INSTALLERS

Trusses require extreme care in fabricating, handling, shipping, installing and bracing. Refer to and follow the latest edition of BCSI (Building Component Safety Information, by TPI and SBCA) for safety practices prior to performing these functions. Installers shall provide temporary bracing per BCSI. Unless noted otherwise, top chord shall have properly attached structural sheathing and bottom chord shall have a properly attached rigid ceiling. Locations shown for permanent lateral restraint of webs shall have bracing installed per BCSI sections B3, B7, or B10, as applicable. Apply plates to each face of truss and position as shown above and on the Joint Details, unless noted otherwise. Refer to drawings 160A-Z for standard plate positions. Refer to job's General Notes page for additional information.

Alpine, a division of ITW Building Components Group Inc. shall not be responsible for any deviation from this drawing, any failure to build the truss in conformance with ANSI/TPI 1, or for handling, shipping, installation and bracing of trusses. A seal on this drawing or cover page listing this drawing, indicates acceptance of professional engineering responsibility solely for the design shown. The suitability and use of this drawing for any structure is the responsibility of the Building Designer per ANSI/TPI 1 Sec.2.

For more information see these web sites: Alpine: www.alpineitw.com; TPI: www.tpinst.org; SBCA: www.sbcindustry.com; ICC: www.iccsafe.org

ALPINE AN ITW COMPANY
6750 Forum Drive
Suite 305
Orlando FL, 32821

SEQN: 65916 COMN	Ply: 1	**Job Number:** b51385aa	Cust: R 857 JRef:1WYP8570001 T55
FROM: RNB	Qty: 1	-terrell floor plan Trademark Const Group	DrwNo: 259.20.0958.20883
Page 1 of 2		**Truss Label:** T-32	SSB / DF 09/15/2020

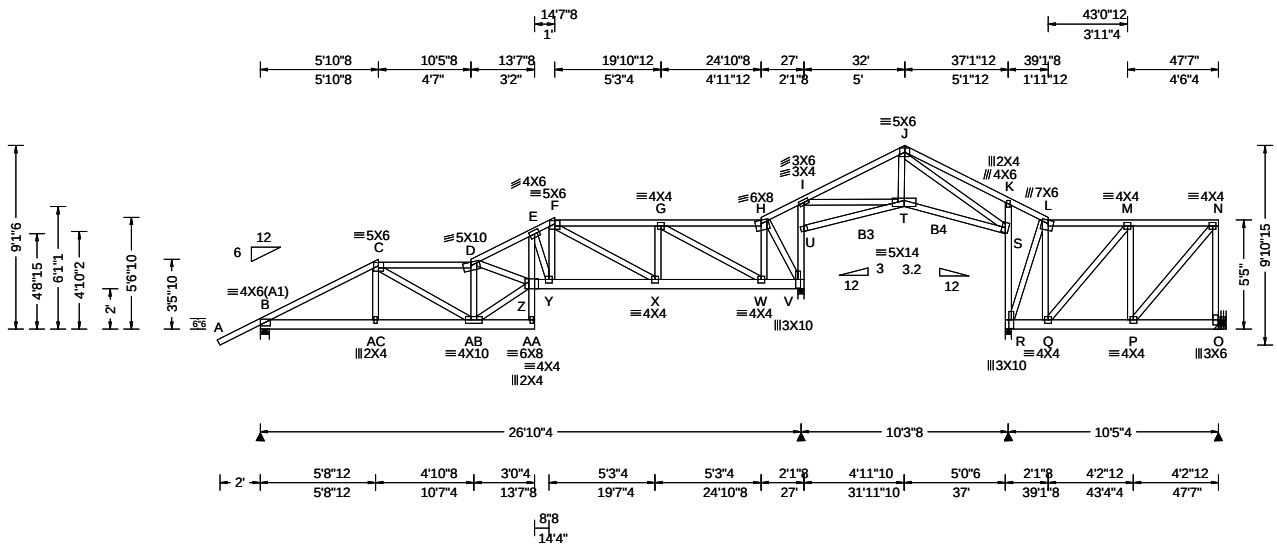

Loading Criteria (psf)

TCLL: 20.00
TCDL: 7.00
BCLL: 0.00
BCDL: 10.00
Des Ld: 37.00
NCBCLL: 10.00
Soffit: 2.00
Load Duration: 1.25
Spacing: 24.0 "

Wind Criteria

Wind Std: ASCE 7-10
Speed: 130 mph
Enclosure: Closed
Risk Category: II
EXP: B Kzt: NA
Mean Height: 15.00 ft
TCDL: 0.0 psf
BCDL: 0.0 psf
MWFRS Parallel Dist: > 2h
C&C Dist a: 4.76 ft
Loc. from endwall: not in 13.00 ft
GCpi: 0.18
Wind Duration: 1.60

Snow Criteria (Pg,Pf in PSF)

Pg: NA Ct: NA CAT: NA
Pf: NA Ce: NA
Lu: NA Cs: NA
Snow Duration: NA

Building Code:
FBC 2017 RES
TPI Std: 2014
Rep Fac: Yes
FT/RT:20(0)/0(0)
Plate Type(s):
WAVE

Defl/CSI Criteria

PP Deflection in	loc	L/defl	L/#
VERT(LL): 0.145	Z	999	360
VERT(CL): 0.275	Z	999	240
HORZ(LL): 0.038	V	-	-
HORZ(TL): 0.071	V	-	-

Creep Factor: 2.0
Max TC CSI: 0.977
Max BC CSI: 0.814
Max Web CSI: 0.923

VIEW Ver: 18.02.01A.0205.19

▲ Maximum Reactions (lbs)

Loc	Gravity R+	/ R-	/ Rh	Non-Gravity / Rw	/ U	/ RL
B	1136	/-	/-	/602	/275	/226
V	1440	/-	/-	/774	/322	/-
R	793	/-	/-	/387	/176	/-
O	384	/-	/-	/207	/99	/-

Wind reactions based on MWFRS
B Brg Width = 5.5 Min Req = 1.5
V Brg Width = 3.5 Min Req = 1.8
R Brg Width = 3.5 Min Req = 1.5
O Brg Width = - Min Req = -
Bearings B, V, & R Fcperp = 425psi.
Members not listed have forces less than 375#

Maximum Top Chord Forces Per Ply (lbs)

Chords	Tens.	Comp.	Chords	Tens.	Comp.
B - C	828	- 1698	F - G	1002	- 1670
C - D	1148	- 2057	G - H	448	- 500
D - E	1573	- 2933	I - J	212	- 480
E - F	1341	- 2389			

Maximum Bot Chord Forces Per Ply (lbs)

Chords	Tens.	Comp.	Chords	Tens.	Comp.
B -AC	1459	- 922	X - W	1634	- 856
AC-AB	1456	- 923	W - V	499	- 264
Z - Y	2548	- 1456	T - S	393	- 228
Y - X	2118	- 1196			

Maximum Web Forces Per Ply (lbs)

Webs	Tens.	Comp.	Webs	Tens.	Comp.
C -AB	713	- 434	G - W	757	- 1339
D -AB	959	- 1728	H - W	796	- 406
D - Z	609	- 379	H - V	578	- 1080
AB- Z	2392	- 1328	V - U	350	- 549
Z - E	1490	- 825	U - I	335	- 472
E - Y	716	- 1176	I - T	447	- 253
Y - F	1010	- 562	J - S	271	- 455
F - X	380	- 537	S - R	329	- 486
X - G	408	- 182			

Lumber

Top chord: 2x4 SP #1;
Bot chord: 2x6 SP #1; B3,B4 2x4 SP #1;
Webs: 2x4 SP #3;

Plating Notes

Plates sized for a minimum of 3.50 sq.in./piece.

Purlins

In lieu of structural panels or rigid ceiling use purlins to laterally brace chords as follows:

Chord	Spacing(in oc)	Start(ft)	End(ft)
TC	53	-2.07	5.88
TC	24	5.88	10.46
TC	43	10.46	14.62
TC	24	14.62	24.87
TC	75	24.87	32.00
TC	75	32.00	39.12
TC	24	39.12	47.58
BC	120	0.15	13.48
BC	120	13.52	26.71
BC	63	26.86	31.97
BC	65	31.97	37.23
BC	120	37.29	47.58

Apply purlins to any chords above or below fillers at 24" OC unless shown otherwise above.

Wind

Wind loads based on MWFRS with additional C&C member design.

Right end vertical exposed to wind pressure.
Deflection meets L/180.

Additional Notes

WARNING: Furnish a copy of this DWG to the installation contractor. Special care must be taken during handling, shipping and installation of trusses. See "WARNING" note below.

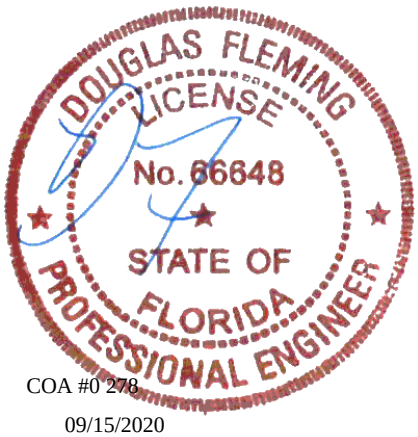

COA #0 278

09/15/2020

****WARNING**** READ AND FOLLOW ALL NOTES ON THIS DRAWING!
****IMPORTANT**** FURNISH THIS DRAWING TO ALL CONTRACTORS INCLUDING THE INSTALLERS

Trusses require extreme care in fabricating, handling, shipping, installing and bracing. Refer to and follow the latest edition of BCSI (Building Component Safety Information, by TPI and SBCA) for safety practices prior to performing these functions. Installers shall provide temporary bracing per BCSI. Unless noted otherwise, top chord shall have properly attached structural sheathing and bottom chord shall have a properly attached rigid ceiling. Locations shown for permanent lateral restraint of webs shall have bracing installed per BCSI sections B3, B7, or B10, as applicable. Apply plates to each face of truss and position as shown above and on the Joint Details, unless noted otherwise. Refer to drawings 160A-Z for standard plate positions. Refer to job's General Notes page for additional information.

Alpine, a division of ITW Building Components Group Inc. shall not be responsible for any deviation from this drawing, any failure to build the truss in conformance with ANSI/TPI 1, or for handling, shipping, installation and bracing of trusses. A seal on this drawing or cover page listing this drawing, indicates acceptance of professional engineering responsibility solely for the design shown. The suitability and use of this drawing for any structure is the responsibility of the Building Designer per ANSI/TPI 1 Sec.2.

For more information see these web sites: Alpine: www.alpineitw.com; TPI: www.tpinst.org; SBCA: www.sbcindustry.com; ICC: www.iccsafe.org

ALPINE AN ITW COMPANY
6750 Forum Drive
Suite 305
Orlando FL, 32821

Hangers / Ties

Simpson Construction Hardware is specified based on the most current information provided by Simpson Strong-Tie. Please refer to the most recent Simpson Strong-Tie catalog for additional information.

Recommended hanger connections are based on manufacturer tested capacities and calculations. Conditions may exist that require different connections than indicated. Refer to manufacturer publication for additional information.

Bearing at location x=47'4" uses the following support conditions: 47'4"
Bearing O (47'4", 10'1"2) LUS24
Supporting Member: (3)2x8 SP SS Dense
(4) 0.148"x3" nails into supporting member,
(2) 0.148"x3" nails into supported member.

DOUGLAS FLEMING
LICENSE
No. 66648
STATE OF
FLORIDA
PROFESSIONAL ENGINEER

COA #0 278

09/15/2020

****WARNING**** READ AND FOLLOW ALL NOTES ON THIS DRAWING!
****IMPORTANT**** FURNISH THIS DRAWING TO ALL CONTRACTORS INCLUDING THE INSTALLERS

Trusses require extreme care in fabricating, handling, shipping, installing and bracing. Refer to and follow the latest edition of BCSI (Building Component Safety Information, by TPI and SBCA) for safety practices prior to performing these functions. Installers shall provide temporary bracing per BCSI. Unless noted otherwise, top chord shall have properly attached structural sheathing and bottom chord shall have a properly attached rigid ceiling. Locations shown for permanent lateral restraint of webs shall have bracing installed per BCSI sections B3, B7, or B10, as applicable. Apply plates to each face of truss and position as shown above and on the Joint Details, unless noted otherwise. Refer to drawings 160A-Z for standard plate positions. Refer to job's General Notes page for additional information.

Alpine, a division of ITW Building Components Group Inc. shall not be responsible for any deviation from this drawing, any failure to build the truss in conformance with ANSI/TPI 1, or for handling, shipping, installation and bracing of trusses. A seal on this drawing or cover page listing this drawing, indicates acceptance of professional engineering responsibility solely for the design shown. The suitability and use of this drawing for any structure is the responsibility of the Building Designer per ANSI/TPI 1 Sec.2.

For more information see these web sites: Alpine: www.alpineitw.com; TPI: www.tpinst.org; SBCA: www.sbcindustry.com; ICC: www.iccsafe.org

ALPINE
AN ITW COMPANY
6750 Forum Drive
Suite 305
Orlando FL, 32821

SEQN: 65917 COMN FROM: RNB	Ply: 1 Qty: 1	**Job Number:** b51385aa -terrell floor plan Trademark Const Group **Truss Label:** T-33	Cust: R 857 JRef:1WYP8570001 T46 DrwNo: 259.20.0958.41857 SSB / DF 09/15/2020

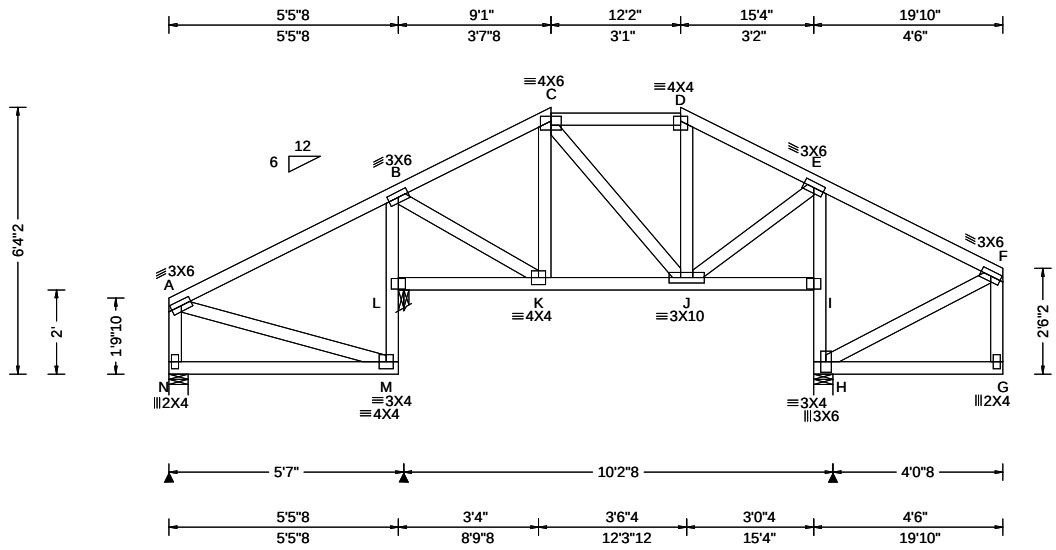

Loading Criteria (psf)

TCLL:	20.00
TCDL:	7.00
BCLL:	0.00
BCDL:	10.00
Des Ld:	37.00
NCBCLL:	10.00
Soffit:	2.00

Load Duration: 1.25
Spacing: 24.0 "

Wind Criteria
Wind Std: ASCE 7-10
Speed: 130 mph
Enclosure: Closed
Risk Category: II
EXP: B Kzt: NA
Mean Height: 16.17 ft
TCDL: 0.0 psf
BCDL: 0.0 psf
MWFRS Parallel Dist: h to 2h
C&C Dist a: 3.00 ft
Loc. from endwall: not in 9.00 ft
GCpi: 0.18
Wind Duration: 1.60

Snow Criteria (Pg,Pf in PSF)
Pg: NA Ct: NA CAT: NA
Pf: NA Ce: NA
Lu: NA Cs: NA
Snow Duration: NA

Building Code:
FBC 2017 RES
TPI Std: 2014
Rep Fac: Yes
FT/RT:20(0)/0(0)
Plate Type(s):
WAVE

Defl/CSI Criteria

PP Deflection in	loc	L/defl	L/#
VERT(LL): 0.070	G	721	360
VERT(CL): 0.148	G	340	240
HORZ(LL): -0.070	H	-	-
HORZ(TL): 0.150	H	-	-

Creep Factor: 2.0
Max TC CSI: 0.316
Max BC CSI: 0.214
Max Web CSI: 0.926

VIEW Ver: 18.02.01A.0205.19

▲Maximum Reactions (lbs)

	Gravity			Non-Gravity		
Loc	R+	/ R-	/ Rh	/ Rw	/ U	/ RL
N	183	/-	/-	/104	/75	/97
L	592	/-	/-	/372	/170	/-
H	771	/-	/-	/362	/193	/-

Wind reactions based on MWFRS
N Brg Width = 5.5 Min Req = 1.5
L Brg Width = 3.0 Min Req = 1.5
H Brg Width = 5.5 Min Req = 1.5
Bearings N, L, & H Fcperp = 425psi.
Members not listed have forces less than 375#

Maximum Web Forces Per Ply (lbs)

Webs	Tens.	Comp.	Webs	Tens.	Comp.
L - B	283	- 506	I - H	332	- 667
E - I	317	- 623			

Lumber
Top chord: 2x4 SP #1;
Bot chord: 2x4 SP #1;
Webs: 2x4 SP #3;

Plating Notes
Plates sized for a minimum of 3.50 sq.in./piece.

Purlins
In lieu of structural panels or rigid ceiling use purlins to laterally brace chords as follows:

Chord	Spacing(in oc)	Start(ft)	End(ft)
TC	75	0.00	9.08
TC	24	9.08	12.17
TC	75	12.17	19.83
BC	62	0.00	5.17
BC	75	5.27	15.52
BC	50	15.63	19.83

Apply purlins to any chords above or below fillers at 24" OC unless shown otherwise above.

Wind
Wind loads based on MWFRS with additional C&C member design.

Right end vertical exposed to wind pressure. Deflection meets L/180.

Right cantilever is not exposed to wind

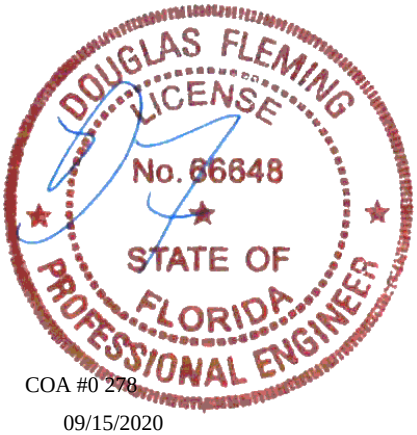

COA #0 278

09/15/2020

****WARNING**** READ AND FOLLOW ALL NOTES ON THIS DRAWING!
****IMPORTANT**** FURNISH THIS DRAWING TO ALL CONTRACTORS INCLUDING THE INSTALLERS

Trusses require extreme care in fabricating, handling, shipping, installing and bracing. Refer to and follow the latest edition of BCSI (Building Component Safety Information, by TPI and SBCA) for safety practices prior to performing these functions. Installers shall provide temporary bracing per BCSI. Unless noted otherwise, top chord shall have properly attached structural sheathing and bottom chord shall have a properly attached rigid ceiling. Locations shown for permanent lateral restraint of webs shall have bracing installed per BCSI sections B3, B7, or B10, as applicable. Apply plates to each face of truss and position as shown above and on the Joint Details, unless noted otherwise. Refer to drawings 160A-Z for standard plate positions. Refer to job's General Notes page for additional information.

Alpine, a division of ITW Building Components Group Inc. shall not be responsible for any deviation from this drawing, any failure to build the truss in conformance with ANSI/TPI 1, or for handling, shipping, installation and bracing of trusses. A seal on this drawing or cover page listing this drawing, indicates acceptance of professional engineering responsibility solely for the design shown. The suitability and use of this drawing for any structure is the responsibility of the Building Designer per ANSI/TPI 1 Sec.2.

For more information see these web sites: Alpine: www.alpineitw.com; TPI: www.tpinst.org; SBCA: www.sbcindustry.com; ICC: www.iccsafe.org

ALPINE AN ITW COMPANY
6750 Forum Drive
Suite 305
Orlando FL, 32821

SEQN: 65918 COMN FROM: RNB	Ply: 1 Qty: 1	**Job Number:** b51385aa -terrell floor plan Trademark Const Group **Truss Label:** T-34	Cust: R 857 JRef:1WYP8570001 T11 DrwNo: 259.20.0958.43487 SSB / DF 09/15/2020

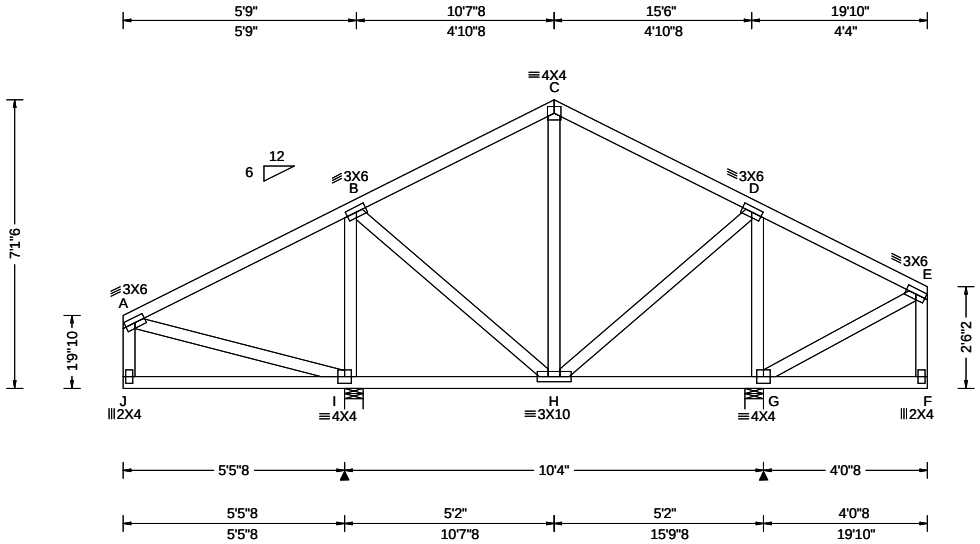

Loading Criteria (psf)	**Wind Criteria**	**Snow Criteria** (Pg,Pf in PSF)	**Defl/CSI Criteria**
TCLL: 20.00 TCDL: 7.00 BCLL: 0.00 BCDL: 10.00 Des Ld: 37.00 NCBCLL: 10.00 Soffit: 2.00 Load Duration: 1.25 Spacing: 24.0 "	Wind Std: ASCE 7-10 Speed: 130 mph Enclosure: Closed Risk Category: II EXP: B Kzt: NA Mean Height: 16.55 ft TCDL: 0.0 psf BCDL: 0.0 psf MWFRS Parallel Dist: h to 2h C&C Dist a: 3.00 ft Loc. from endwall: not in 9.00 ft GCpi: 0.18 Wind Duration: 1.60	Pg: NA Ct: NA CAT: NA Pf: NA Ce: NA Lu: NA Cs: NA Snow Duration: NA Building Code: FBC 2017 RES TPI Std: 2014 Rep Fac: Yes FT/RT:20(0)/0(0) Plate Type(s): WAVE	PP Deflection in loc L/defl L/# VERT(LL): 0.008 J 999 360 VERT(CL): 0.016 J 999 240 HORZ(LL): -0.003 B - - HORZ(TL): 0.006 B - - Creep Factor: 2.0 Max TC CSI: 0.368 Max BC CSI: 0.214 Max Web CSI: 0.272 VIEW Ver: 18.02.01A.0205.19

▲Maximum Reactions (lbs)

	Gravity			Non-Gravity		
Loc	R+	/ R-	/ Rh	/ Rw	/ U	/ RL
I	885	/-	/-	/454	/184	/127
G	705	/-	/-	/342	/138	/-

Wind reactions based on MWFRS
I Brg Width = 5.5 Min Req = 1.5
G Brg Width = 5.5 Min Req = 1.5
Bearings I & G Fcperp = 425psi.
Members not listed have forces less than 375#

Maximum Web Forces Per Ply (lbs)

Webs	Tens.	Comp.	Webs	Tens.	Comp.
I - B	368	- 697	D - G	289	- 535

Lumber

Top chord: 2x4 SP #1;
Bot chord: 2x4 SP #1;
Webs: 2x4 SP #3;

Plating Notes

Plates sized for a minimum of 3.50 sq.in./piece.

Purlins

In lieu of structural panels or rigid ceiling use purlins to laterally brace chords as follows:

Chord	Spacing(in oc)	Start(ft)	End(ft)
TC	75	0.00	10.63
TC	75	10.63	19.83
BC	75	0.00	19.83

Apply purlins to any chords above or below fillers at 24" OC unless shown otherwise above.

Wind

Wind loads based on MWFRS with additional C&C member design.

Right end vertical exposed to wind pressure. Deflection meets L/180.

Left and right cantilevers are not exposed to wind

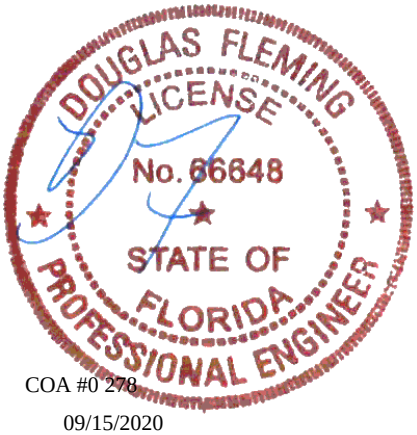

COA #0 278

09/15/2020

****WARNING**** READ AND FOLLOW ALL NOTES ON THIS DRAWING!
****IMPORTANT**** FURNISH THIS DRAWING TO ALL CONTRACTORS INCLUDING THE INSTALLERS

Trusses require extreme care in fabricating, handling, shipping, installing and bracing. Refer to and follow the latest edition of BCSI (Building Component Safety Information, by TPI and SBCA) for safety practices prior to performing these functions. Installers shall provide temporary bracing per BCSI. Unless noted otherwise, top chord shall have properly attached structural sheathing and bottom chord shall have a properly attached rigid ceiling. Locations shown for permanent lateral restraint of webs shall have bracing installed per BCSI sections B3, B7, or B10, as applicable. Apply plates to each face of truss and position as shown above and on the Joint Details, unless noted otherwise. Refer to drawings 160A-Z for standard plate positions. Refer to job's General Notes page for additional information.

Alpine, a division of ITW Building Components Group Inc. shall not be responsible for any deviation from this drawing, any failure to build the truss in conformance with ANSI/TPI 1, or for handling, shipping, installation and bracing of trusses. A seal on this drawing or cover page listing this drawing, indicates acceptance of professional engineering responsibility solely for the design shown. The suitability and use of this drawing for any structure is the responsibility of the Building Designer per ANSI/TPI 1 Sec.2.

For more information see these web sites: Alpine: www.alpineitw.com; TPI: www.tpinst.org; SBCA: www.sbcindustry.com; ICC: www.iccsafe.org

ALPINE
AN ITW COMPANY
6750 Forum Drive
Suite 305
Orlando FL, 32821

SEQN: 65919 COMN FROM: RNB	Ply: 1 Qty: 1	**Job Number:** b51385aa -terrell floor plan Trademark Const Group **Truss Label:** T-35	Cust: R 857 JRef:1WYP8570001 T65 DrwNo: 259.20.0958.44917 SSB / DF 09/15/2020

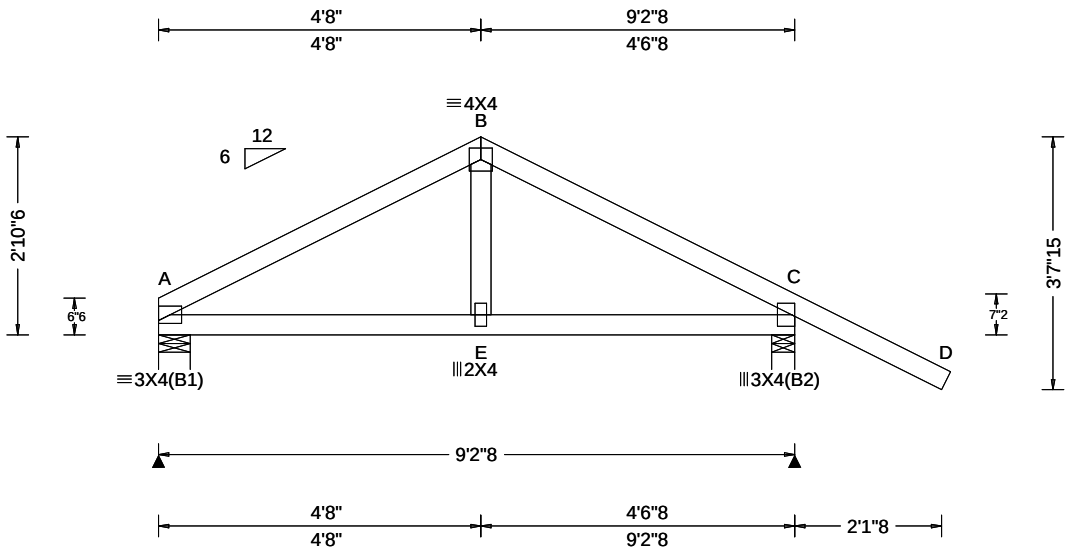

Loading Criteria (psf)

TCLL:	20.00
TCDL:	7.00
BCLL:	0.00
BCDL:	10.00
Des Ld:	37.00
NCBCLL:	10.00
Soffit:	2.00

Load Duration: 1.25
Spacing: 24.0 "

Wind Criteria
Wind Std: ASCE 7-10
Speed: 130 mph
Enclosure: Closed
Risk Category: II
EXP: B Kzt: NA
Mean Height: 15.00 ft
TCDL: 0.0 psf
BCDL: 0.0 psf
MWFRS Parallel Dist: 0 to h/2
C&C Dist a: 3.00 ft
Loc. from endwall: Any
GCpi: 0.18
Wind Duration: 1.60

Snow Criteria (Pg,Pf in PSF)
Pg: NA Ct: NA CAT: NA
Pf: NA Ce: NA
Lu: NA Cs: NA
Snow Duration: NA

Building Code:
FBC 2017 RES
TPI Std: 2014
Rep Fac: Yes
FT/RT:20(0)/0(0)
Plate Type(s):
WAVE

Defl/CSI Criteria

PP Deflection in	loc	L/defl	L/#
VERT(LL): 0.008	E	999	360
VERT(CL): 0.014	E	999	240
HORZ(LL): 0.005	E	-	-
HORZ(TL): 0.010	E	-	-

Creep Factor: 2.0
Max TC CSI: 0.422
Max BC CSI: 0.171
Max Web CSI: 0.073

VIEW Ver: 18.02.01A.0205.19

▲Maximum Reactions (lbs)

	Gravity			Non-Gravity		
Loc	R+	/ R-	/ Rh	/ Rw	/ U	/ RL
A	335	/-	/-	/181	/103	/65
C	494	/-	/-	/272	/158	/-

Wind reactions based on MWFRS
A Brg Width = 5.5 Min Req = 1.5
C Brg Width = 4.0 Min Req = 1.5
Bearings A & C Fcperp = 425psi.
Members not listed have forces less than 375#

Maximum Top Chord Forces Per Ply (lbs)

Chords	Tens.	Comp.	Chords	Tens.	Comp.
A - B	346	-403	B - C	341	-414

Lumber
Top chord: 2x4 SP #1;
Bot chord: 2x4 SP #1;
Webs: 2x4 SP #3;

Plating Notes
Plates sized for a minimum of 3.50 sq.in./piece.

Purlins
In lieu of structural panels or rigid ceiling use purlins to laterally brace chords as follows:

Chord	Spacing(in oc)	Start(ft)	End(ft)
TC	61	0.10	4.67
TC	75	4.67	11.40
BC	108	0.17	9.16

Apply purlins to any chords above or below fillers at 24" OC unless shown otherwise above.

Wind
Wind loads based on MWFRS with additional C&C member design.

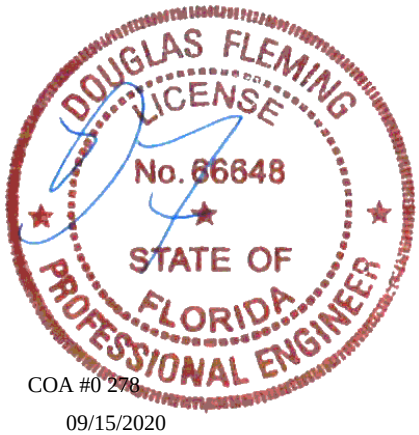

COA #0 278

09/15/2020

****WARNING**** READ AND FOLLOW ALL NOTES ON THIS DRAWING!
****IMPORTANT**** FURNISH THIS DRAWING TO ALL CONTRACTORS INCLUDING THE INSTALLERS

Trusses require extreme care in fabricating, handling, shipping, installing and bracing. Refer to and follow the latest edition of BCSI (Building Component Safety Information, by TPI and SBCA) for safety practices prior to performing these functions. Installers shall provide temporary bracing per BCSI. Unless noted otherwise, top chord shall have properly attached structural sheathing and bottom chord shall have a properly attached rigid ceiling. Locations shown for permanent lateral restraint of webs shall have bracing installed per BCSI sections B3, B7, or B10, as applicable. Apply plates to each face of truss and position as shown above and on the Joint Details, unless noted otherwise. Refer to drawings 160A-Z for standard plate positions. Refer to job's General Notes page for additional information.

Alpine, a division of ITW Building Components Group Inc. shall not be responsible for any deviation from this drawing, any failure to build the truss in conformance with ANSI/TPI 1, or for handling, shipping, installation and bracing of trusses. A seal on this drawing or cover page listing this drawing, indicates acceptance of professional engineering responsibility solely for the design shown. The suitability and use of this drawing for any structure is the responsibility of the Building Designer per ANSI/TPI 1 Sec.2.

For more information see these web sites: Alpine: www.alpineitw.com; TPI: www.tpinst.org; SBCA: www.sbcindustry.com; ICC: www.iccsafe.org

ALPINE AN ITW COMPANY
6750 Forum Drive
Suite 305
Orlando FL, 32821

SEQN: 65920 COMN FROM: RNB Page 1 of 2	Ply: 1 Qty: 1	**Job Number:** b51385aa -terrell floor plan Trademark Const Group **Truss Label:** T-36	Cust: R 857 JRef:1WYP8570001 T72 DrwNo: 259.20.0958.47337 SSB / DF 09/15/2020

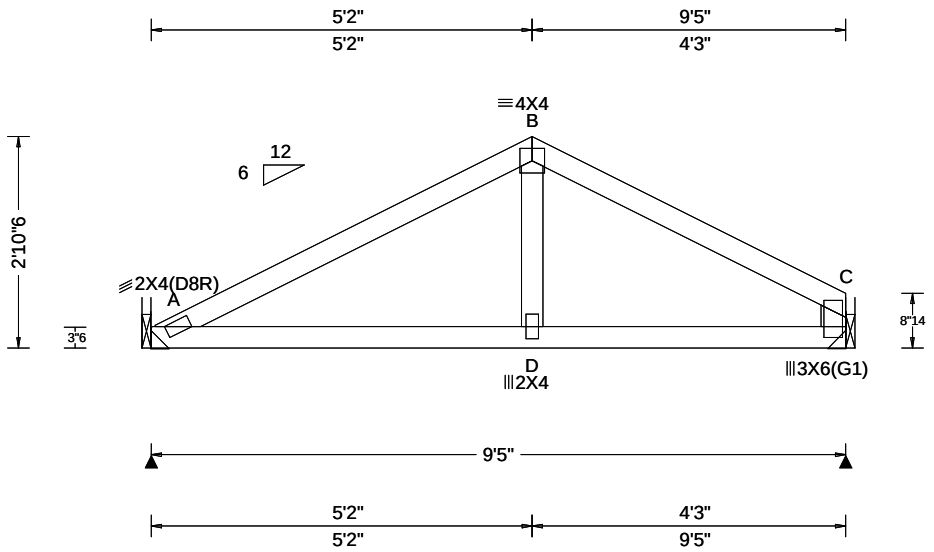

Loading Criteria (psf)

TCLL:	20.00
TCDL:	7.00
BCLL:	0.00
BCDL:	10.00
Des Ld:	37.00
NCBCLL:	10.00
Soffit:	2.00

Load Duration: 1.25
Spacing: 24.0 "

Wind Criteria
Wind Std: ASCE 7-10
Speed: 130 mph
Enclosure: Closed
Risk Category: II
EXP: B Kzt: NA
Mean Height: 15.00 ft
TCDL: 0.0 psf
BCDL: 0.0 psf
MWFRS Parallel Dist: 0 to h/2
C&C Dist a: 3.00 ft
Loc. from endwall: not in 4.50 ft
GCpi: 0.18
Wind Duration: 1.60

Snow Criteria (Pg,Pf in PSF)
Pg: NA Ct: NA CAT: NA
Pf: NA Ce: NA
Lu: NA Cs: NA
Snow Duration: NA

Building Code:
FBC 2017 RES
TPI Std: 2014
Rep Fac: Yes
FT/RT:20(0)/0(0)
Plate Type(s):
WAVE

Defl/CSI Criteria

PP Deflection in	loc	L/defl	L/#
VERT(LL): 0.009	D	999	360
VERT(CL): 0.018	D	999	240
HORZ(LL): 0.005	D	-	-
HORZ(TL): 0.009	D	-	-

Creep Factor: 2.0
Max TC CSI: 0.298
Max BC CSI: 0.188
Max Web CSI: 0.075

VIEW Ver: 18.02.01A.0205.19

▲Maximum Reactions (lbs)

	Gravity			Non-Gravity		
Loc	R+	/ R-	/ Rh	/ Rw	/ U	/ RL
A	357	/-	/-	/188	/110	/44
C	351	/-	/-	/177	/110	/-

Wind reactions based on MWFRS
A Brg Width = - Min Req = -
C Brg Width = - Min Req = -
Members not listed have forces less than 375#

Maximum Top Chord Forces Per Ply (lbs)

Chords	Tens.	Comp.	Chords	Tens.	Comp.
A - B	257	- 462	B - C	270	- 468

Lumber
Top chord: 2x4 SP #1;
Bot chord: 2x4 SP #1;
Webs: 2x4 SP #3;
Rt Stub Wedge: 2x4 SP #3;

Plating Notes
Plates sized for a minimum of 3.50 sq.in./piece.

Purlins
In lieu of structural panels or rigid ceiling use purlins to laterally brace chords as follows:

Chord	Spacing(in oc)	Start(ft)	End(ft)
TC	68	0.13	5.17
TC	57	5.17	9.42
BC	113	0.00	9.42

Apply purlins to any chords above or below fillers at 24" OC unless shown otherwise above.

Wind
Wind loads based on MWFRS with additional C&C member design.

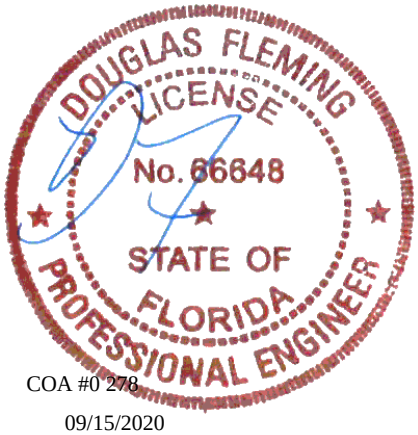

COA #0 278

09/15/2020

****WARNING**** READ AND FOLLOW ALL NOTES ON THIS DRAWING!
****IMPORTANT**** FURNISH THIS DRAWING TO ALL CONTRACTORS INCLUDING THE INSTALLERS

Trusses require extreme care in fabricating, handling, shipping, installing and bracing. Refer to and follow the latest edition of BCSI (Building Component Safety Information, by TPI and SBCA) for safety practices prior to performing these functions. Installers shall provide temporary bracing per BCSI. Unless noted otherwise, top chord shall have properly attached structural sheathing and bottom chord shall have a properly attached rigid ceiling. Locations shown for permanent lateral restraint of webs shall have bracing installed per BCSI sections B3, B7, or B10, as applicable. Apply plates to each face of truss and position as shown above and on the Joint Details, unless noted otherwise. Refer to drawings 160A-Z for standard plate positions. Refer to job's General Notes page for additional information.

Alpine, a division of ITW Building Components Group Inc. shall not be responsible for any deviation from this drawing, any failure to build the truss in conformance with ANSI/TPI 1, or for handling, shipping, installation and bracing of trusses. A seal on this drawing or cover page listing this drawing, indicates acceptance of professional engineering responsibility solely for the design shown. The suitability and use of this drawing for any structure is the responsibility of the Building Designer per ANSI/TPI 1 Sec.2.

For more information see these web sites: Alpine: www.alpineitw.com; TPI: www.tpinst.org; SBCA: www.sbcindustry.com; ICC: www.iccsafe.org

ALPINE AN ITW COMPANY
6750 Forum Drive
Suite 305
Orlando FL, 32821

Hangers / Ties

Simpson Construction Hardware is specified based on the most current information provided by Simpson Strong-Tie. Please refer to the most recent Simpson Strong-Tie catalog for additional information.

Recommended hanger connections are based on manufacturer tested capacities and calculations. Conditions may exist that require different connections than indicated. Refer to manufacturer publication for additional information.

Bearing at location x=0' uses the following support conditions: 0'
Bearing A (0', 10'1"2) LUS24
Supporting Member: (1)2x6 SP #1
(4) 0.148"x3" nails into supporting member,
(2) 0.148"x3" nails into supported member.
Bearing C (9'2", 10'1"2) LUS24
Supporting Member: (1)2x6 SP #1
(4) 0.148"x3" nails into supporting member,
(2) 0.148"x3" nails into supported member.

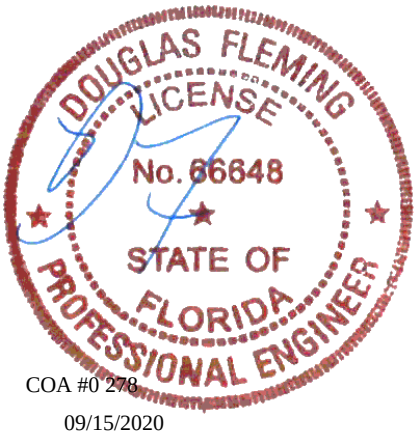

COA #0 278

09/15/2020

****WARNING**** READ AND FOLLOW ALL NOTES ON THIS DRAWING!
****IMPORTANT**** FURNISH THIS DRAWING TO ALL CONTRACTORS INCLUDING THE INSTALLERS

Trusses require extreme care in fabricating, handling, shipping, installing and bracing. Refer to and follow the latest edition of BCSI (Building Component Safety Information, by TPI and SBCA) for safety practices prior to performing these functions. Installers shall provide temporary bracing per BCSI. Unless noted otherwise, top chord shall have properly attached structural sheathing and bottom chord shall have a properly attached rigid ceiling. Locations shown for permanent lateral restraint of webs shall have bracing installed per BCSI sections B3, B7, or B10, as applicable. Apply plates to each face of truss and position as shown above and on the Joint Details, unless noted otherwise. Refer to drawings 160A-Z for standard plate positions. Refer to job's General Notes page for additional information.

Alpine, a division of ITW Building Components Group Inc. shall not be responsible for any deviation from this drawing, any failure to build the truss in conformance with ANSI/TPI 1, or for handling, shipping, installation and bracing of trusses. A seal on this drawing or cover page listing this drawing, indicates acceptance of professional engineering responsibility solely for the design shown. The suitability and use of this drawing for any structure is the responsibility of the Building Designer per ANSI/TPI 1 Sec.2.

For more information see these web sites: Alpine: www.alpineitw.com; TPI: www.tpinst.org; SBCA: www.sbcindustry.com; ICC: www.iccsafe.org

ALPINE AN ITW COMPANY
6750 Forum Drive
Suite 305
Orlando FL, 32821

SEQN: 65921 COMN FROM: RNB Page 1 of 2	Ply: 1 Qty: 1	**Job Number:** b51385aa -terrell floor plan Trademark Const Group **Truss Label:** T-37	Cust: R 857 JRef:1WYP8570001 T5 DrwNo: 259.20.0958.49987 SSB / DF 09/15/2020

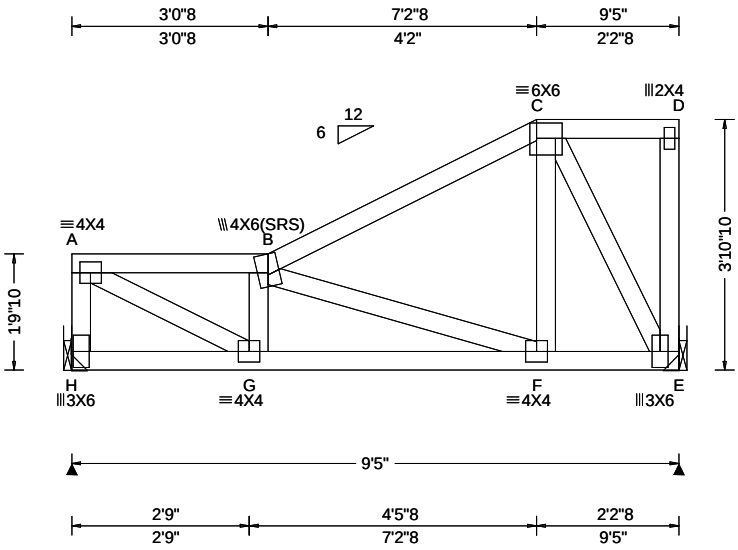

Loading Criteria (psf)

TCLL:	20.00
TCDL:	7.00
BCLL:	0.00
BCDL:	10.00
Des Ld:	37.00
NCBCLL:	10.00
Soffit:	2.00

Load Duration: 1.25
Spacing: 24.0 "

Wind Criteria
Wind Std: ASCE 7-10
Speed: 130 mph
Enclosure: Closed
Risk Category: II
EXP: B Kzt: NA
Mean Height: 15.00 ft
TCDL: 0.0 psf
BCDL: 0.0 psf
MWFRS Parallel Dist: h/2 to h
C&C Dist a: 3.00 ft
Loc. from endwall: not in 4.50 ft
GCpi: 0.18
Wind Duration: 1.60

Snow Criteria (Pg,Pf in PSF)
Pg: NA Ct: NA CAT: NA
Pf: NA Ce: NA
Lu: NA Cs: NA
Snow Duration: NA

Building Code:
FBC 2017 RES
TPI Std: 2014
Rep Fac: Yes
FT/RT:20(0)/0(0)
Plate Type(s):
WAVE

Defl/CSI Criteria

PP Deflection in	loc	L/defl	L/#
VERT(LL): 0.010	B	999	360
VERT(CL): 0.018	B	999	240
HORZ(LL): 0.003	A	-	-
HORZ(TL): 0.005	A	-	-

Creep Factor: 2.0
Max TC CSI: 0.179
Max BC CSI: 0.156
Max Web CSI: 0.231

VIEW Ver: 18.02.01A.0205.19

▲Maximum Reactions (lbs)

	Gravity			Non-Gravity		
Loc	R+	/ R-	/ Rh	/ Rw	/ U	/ RL
H	356	/-	/-	/173	/111	/89
E	356	/-	/-	/194	/116	/-

Wind reactions based on MWFRS
H Brg Width = - Min Req = -
E Brg Width = - Min Req = -
Members not listed have forces less than 375#

Maximum Top Chord Forces Per Ply (lbs)

Chords	Tens.	Comp.
A - B	354	- 493

Maximum Bot Chord Forces Per Ply (lbs)

Chords	Tens.	Comp.
G - F	530	- 472

Maximum Web Forces Per Ply (lbs)

Webs	Tens.	Comp.	Webs	Tens.	Comp.
A - G	557	- 399	B - F	324	- 377

Lumber
Top chord: 2x4 SP #1;
Bot chord: 2x4 SP #1;
Webs: 2x4 SP #3;

Plating Notes
Plates sized for a minimum of 3.50 sq.in./piece.

Purlins
In lieu of structural panels or rigid ceiling use purlins to laterally brace chords as follows:

Chord	Spacing(in oc)	Start(ft)	End(ft)
TC	24	0.00	3.04
TC	56	3.04	7.21
TC	24	7.21	9.42
BC	113	0.00	9.42

Apply purlins to any chords above or below fillers at 24" OC unless shown otherwise above.

Wind
Wind loads based on MWFRS with additional C&C member design.

Right end vertical exposed to wind pressure.
Deflection meets L/180.

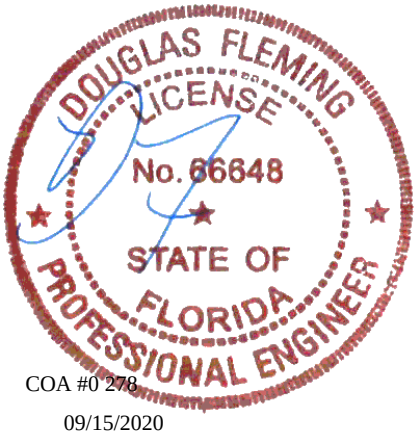

COA #0 278

09/15/2020

****WARNING**** READ AND FOLLOW ALL NOTES ON THIS DRAWING!
****IMPORTANT**** FURNISH THIS DRAWING TO ALL CONTRACTORS INCLUDING THE INSTALLERS

Trusses require extreme care in fabricating, handling, shipping, installing and bracing. Refer to and follow the latest edition of BCSI (Building Component Safety Information, by TPI and SBCA) for safety practices prior to performing these functions. Installers shall provide temporary bracing per BCSI. Unless noted otherwise, top chord shall have properly attached structural sheathing and bottom chord shall have a properly attached rigid ceiling. Locations shown for permanent lateral restraint of webs shall have bracing installed per BCSI sections B3, B7, or B10, as applicable. Apply plates to each face of truss and position as shown above and on the Joint Details, unless noted otherwise. Refer to drawings 160A-Z for standard plate positions. Refer to job's General Notes page for additional information.

Alpine, a division of ITW Building Components Group Inc. shall not be responsible for any deviation from this drawing, any failure to build the truss in conformance with ANSI/TPI 1, or for handling, shipping, installation and bracing of trusses. A seal on this drawing or cover page listing this drawing, indicates acceptance of professional engineering responsibility solely for the design shown. The suitability and use of this drawing for any structure is the responsibility of the Building Designer per ANSI/TPI 1 Sec.2.

For more information see these web sites: Alpine: www.alpineitw.com; TPI: www.tpinst.org; SBCA: www.sbcindustry.com; ICC: www.iccsafe.org

ALPINE
AN ITW COMPANY
6750 Forum Drive
Suite 305
Orlando FL, 32821

Hangers / Ties

Simpson Construction Hardware is specified based on the most current information provided by Simpson Strong-Tie. Please refer to the most recent Simpson Strong-Tie catalog for additional information.

Recommended hanger connections are based on manufacturer tested capacities and calculations. Conditions may exist that require different connections than indicated. Refer to manufacturer publication for additional information.

Bearing at location x=0' uses the following support conditions: 0'
Bearing H (0', 10'1"2) LUS24
Supporting Member: (1)2x6 SP #1
(4) 0.148"x3" nails into supporting member,
(2) 0.148"x3" nails into supported member.
Bearing E (9'2", 10'1"2) LUS24
Supporting Member: (1)2x6 SP #1
(4) 0.148"x3" nails into supporting member,
(2) 0.148"x3" nails into supported member.

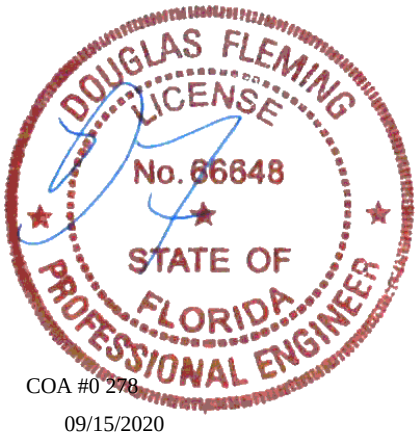

COA #0 278

09/15/2020

****WARNING**** READ AND FOLLOW ALL NOTES ON THIS DRAWING!
****IMPORTANT**** FURNISH THIS DRAWING TO ALL CONTRACTORS INCLUDING THE INSTALLERS

Trusses require extreme care in fabricating, handling, shipping, installing and bracing. Refer to and follow the latest edition of BCSI (Building Component Safety Information, by TPI and SBCA) for safety practices prior to performing these functions. Installers shall provide temporary bracing per BCSI. Unless noted otherwise, top chord shall have properly attached structural sheathing and bottom chord shall have a properly attached rigid ceiling. Locations shown for permanent lateral restraint of webs shall have bracing installed per BCSI sections B3, B7, or B10, as applicable. Apply plates to each face of truss and position as shown above and on the Joint Details, unless noted otherwise. Refer to drawings 160A-Z for standard plate positions. Refer to job's General Notes page for additional information.

Alpine, a division of ITW Building Components Group Inc. shall not be responsible for any deviation from this drawing, any failure to build the truss in conformance with ANSI/TPI 1, or for handling, shipping, installation and bracing of trusses. A seal on this drawing or cover page listing this drawing, indicates acceptance of professional engineering responsibility solely for the design shown. The suitability and use of this drawing for any structure is the responsibility of the Building Designer per ANSI/TPI 1 Sec.2.

For more information see these web sites: Alpine: www.alpineitw.com; TPI: www.tpinst.org; SBCA: www.sbcindustry.com; ICC: www.iccsafe.org

ALPINE AN ITW COMPANY
6750 Forum Drive
Suite 305
Orlando FL, 32821

SEQN: 65922 COMN FROM: RNB	Ply: 1 Qty: 3	**Job Number:** b51385aa -terrell floor plan Trademark Const Group **Truss Label:** T-38	Cust: R 857 JRef:1WYP8570001 T70 DrwNo: 259.20.0958.51703 SSB / DF 09/15/2020

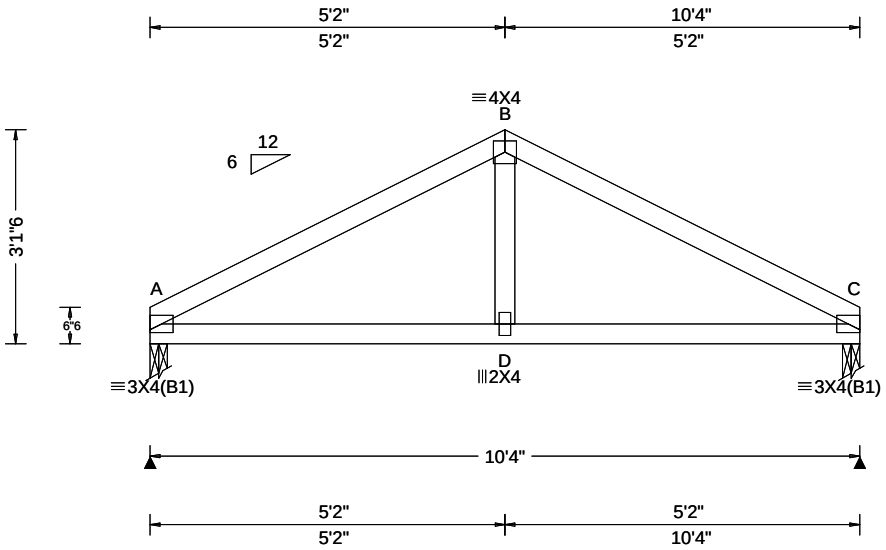

Loading Criteria (psf)

TCLL:	20.00
TCDL:	7.00
BCLL:	0.00
BCDL:	10.00
Des Ld:	37.00
NCBCLL:	10.00
Soffit:	2.00

Load Duration: 1.25
Spacing: 24.0 "

Wind Criteria
Wind Std: ASCE 7-10
Speed: 130 mph
Enclosure: Closed
Risk Category: II
EXP: B Kzt: NA
Mean Height: 15.92 ft
TCDL: 0.0 psf
BCDL: 0.0 psf
MWFRS Parallel Dist: h/2 to h
C&C Dist a: 3.00 ft
Loc. from endwall: not in 4.50 ft
GCpi: 0.18
Wind Duration: 1.60

Snow Criteria (Pg,Pf in PSF)
Pg: NA Ct: NA CAT: NA
Pf: NA Ce: NA
Lu: NA Cs: NA
Snow Duration: NA

Building Code:
FBC 2017 RES
TPI Std: 2014
Rep Fac: Yes
FT/RT:20(0)/0(0)
Plate Type(s):
WAVE

Defl/CSI Criteria

PP Deflection in	loc	L/defl	L/#
VERT(LL): 0.006	D	999	360
VERT(CL): 0.012	D	999	240
HORZ(LL): 0.003	D	-	-
HORZ(TL): 0.006	D	-	-

Creep Factor: 2.0
Max TC CSI: 0.276
Max BC CSI: 0.188
Max Web CSI: 0.084

VIEW Ver: 18.02.01A.0205.19

▲Maximum Reactions (lbs)

	Gravity			Non-Gravity		
Loc	R+	/ R-	/ Rh	/ Rw	/ U	/ RL
A	391	/-	/-	/201	/123	/45
C	391	/-	/-	/201	/123	/-

Wind reactions based on MWFRS
A Brg Width = 3.0 Min Req = 1.5
C Brg Width = 3.0 Min Req = 1.5
Bearings A & C Fcperp = 425psi.
Members not listed have forces less than 375#

Maximum Top Chord Forces Per Ply (lbs)

Chords	Tens.	Comp.	Chords	Tens.	Comp.
A - B	272	- 511	B - C	272	- 511

Maximum Bot Chord Forces Per Ply (lbs)

Chords	Tens.	Comp.	Chords	Tens.	Comp.
A - D	404	- 189	D - C	404	- 189

Lumber
Top chord: 2x4 SP #1;
Bot chord: 2x4 SP #1;
Webs: 2x4 SP #3;

Plating Notes
Plates sized for a minimum of 3.50 sq.in./piece.

Purlins
In lieu of structural panels or rigid ceiling use purlins to laterally brace chords as follows:

Chord	Spacing(in oc)	Start(ft)	End(ft)
TC	68	0.10	5.17
TC	68	5.17	10.23
BC	120	0.17	10.16

Apply purlins to any chords above or below fillers at 24" OC unless shown otherwise above.

Wind
Wind loads based on MWFRS with additional C&C member design.

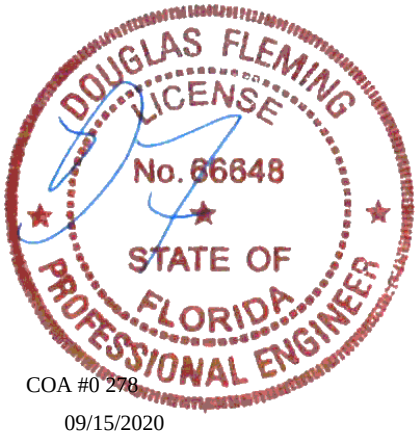

COA #0 278

09/15/2020

****WARNING**** READ AND FOLLOW ALL NOTES ON THIS DRAWING!
****IMPORTANT**** FURNISH THIS DRAWING TO ALL CONTRACTORS INCLUDING THE INSTALLERS

Trusses require extreme care in fabricating, handling, shipping, installing and bracing. Refer to and follow the latest edition of BCSI (Building Component Safety Information, by TPI and SBCA) for safety practices prior to performing these functions. Installers shall provide temporary bracing per BCSI. Unless noted otherwise, top chord shall have properly attached structural sheathing and bottom chord shall have a properly attached rigid ceiling. Locations shown for permanent lateral restraint of webs shall have bracing installed per BCSI sections B3, B7, or B10, as applicable. Apply plates to each face of truss and position as shown above and on the Joint Details, unless noted otherwise. Refer to drawings 160A-Z for standard plate positions. Refer to job's General Notes page for additional information.

Alpine, a division of ITW Building Components Group Inc. shall not be responsible for any deviation from this drawing, any failure to build the truss in conformance with ANSI/TPI 1, or for handling, shipping, installation and bracing of trusses. A seal on this drawing or cover page listing this drawing, indicates acceptance of professional engineering responsibility solely for the design shown. The suitability and use of this drawing for any structure is the responsibility of the Building Designer per ANSI/TPI 1 Sec.2.

For more information see these web sites: Alpine: www.alpineitw.com; TPI: www.tpinst.org; SBCA: www.sbcindustry.com; ICC: www.iccsafe.org

ALPINE AN ITW COMPANY
6750 Forum Drive
Suite 305
Orlando FL, 32821

SEQN: 65923 COMN FROM: RNB	Ply: 1 Qty: 1	**Job Number:** b51385aa -terrell floor plan Trademark Const Group **Truss Label:** T-4	Cust: R 857 JRef:1WYP8570001 T23 DrwNo: 259.20.0959.24297 SSB / DF 09/15/2020

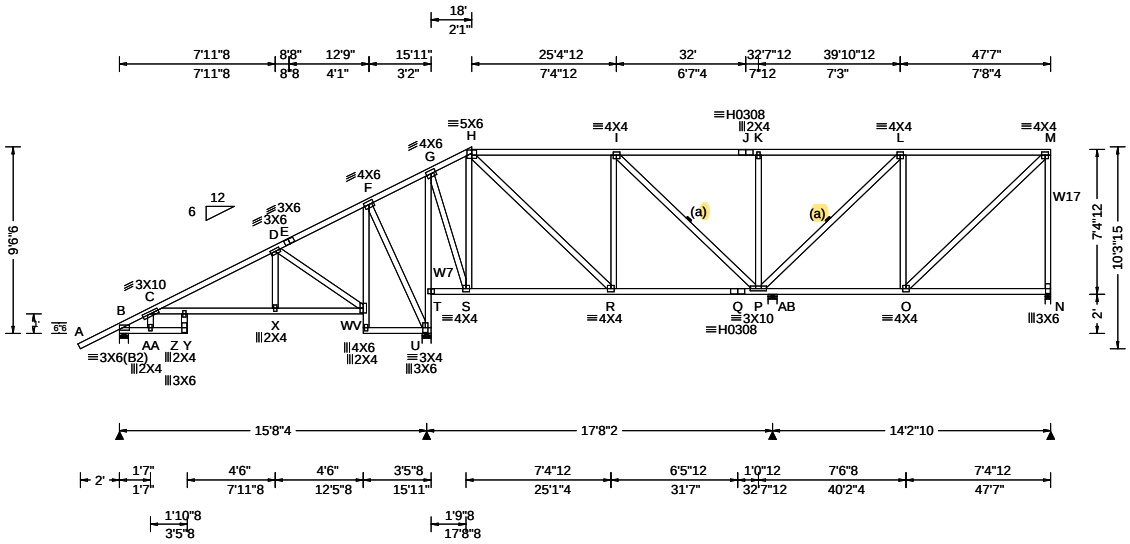

Loading Criteria (psf)

TCLL:	20.00
TCDL:	7.00
BCLL:	0.00
BCDL:	10.00
Des Ld:	37.00
NCBCLL:	10.00
Soffit:	2.00

Load Duration: 1.25
Spacing: 24.0 "

Wind Criteria
Wind Std: ASCE 7-10
Speed: 130 mph
Enclosure: Closed
Risk Category: II
EXP: B Kzt: NA
Mean Height: 15.00 ft
TCDL: 0.0 psf
BCDL: 0.0 psf
MWFRS Parallel Dist: h to 2h
C&C Dist a: 4.76 ft
Loc. from endwall: not in 13.00 ft
GCpi: 0.18
Wind Duration: 1.60

Snow Criteria (Pg,Pf in PSF)
Pg: NA Ct: NA CAT: NA
Pf: NA Ce: NA
Lu: NA Cs: NA
Snow Duration: NA

Building Code:
FBC 2017 RES
TPI Std: 2014
Rep Fac: Yes
FT/RT:20(0)/0(0)
Plate Type(s):
WAVE, HS

Defl/CSI Criteria

PP Deflection in	loc	L/defl	L/#
VERT(LL): 0.208	Y	897	360
VERT(CL): 0.395	Y	472	240
HORZ(LL): 0.101	U	-	-
HORZ(TL): 0.198	U	-	-

Creep Factor: 2.0
Max TC CSI: 0.996
Max BC CSI: 0.656
Max Web CSI: 0.783

VIEW Ver: 18.02.01A.0205.19

▲ Maximum Reactions (lbs)

Loc	Gravity R+	/ R-	/ Rh	Non-Gravity / Rw	/ U	/ RL
B	647	/-	/-	/347	/150	/262
U	1640	/-	/-	/938	/555	/-
AB	634	/-	/-	/299	/190	/-
N	834	/-	/-	/384	/258	/-

Wind reactions based on MWFRS
B Brg Width = 5.5 Min Req = 1.5
U Brg Width = 5.5 Min Req = 2.1
AB Brg Width = 5.5 Min Req = 1.5
N Brg Width = 3.5 Min Req = 1.5
Bearings B, U, AB, & N Fcperp = 425psi.
Members not listed have forces less than 375#

Maximum Top Chord Forces Per Ply (lbs)

Chords	Tens.	Comp.	Chords	Tens.	Comp.
B - C	123	- 425	I - J	431	- 644
C - D	387	- 757	J - K	431	- 644
F - G	231	- 396	K - L	431	- 644
H - I	496	- 738	L - M	410	- 620

Maximum Bot Chord Forces Per Ply (lbs)

Chords	Tens.	Comp.	Chords	Tens.	Comp.
C - Z	569	- 283	R - Q	750	- 355
Z - X	631	- 326	Q - P	750	- 355
X - V	636	- 327	P - O	1279	- 718

Maximum Web Forces Per Ply (lbs)

Webs	Tens.	Comp.	Webs	Tens.	Comp.
D - V	343	- 666	S - H	488	- 777
V - F	434	- 188	H - R	788	- 373
F - U	280	- 520	K - P	223	- 377
U - T	703	- 1156	L - O	295	- 481
T - G	684	- 1131	O - M	859	- 389
G - S	895	- 488	M - N	376	- 766

Lumber

Top chord: 2x4 SP #1;
Bot chord: 2x4 SP #1;
Webs: 2x4 SP #3; W7 2x4 SP SS Dense;
W17 2x4 SP #1;

Bracing

(a) Continuous lateral restraint equally spaced on member. Or 1x4 #3SRB SPF-S or better "T" reinforcement. 80% length of web member. Attached with 8d Box or Gun (0.113"x2.5",min.)nails @ 6" oc.

Plating Notes

Plates sized for a minimum of 3.50 sq.in./piece.

Purlins

In lieu of structural panels or rigid ceiling use purlins to laterally brace chords as follows:

Chord	Spacing(in oc)	Start(ft)	End(ft)
TC	71	-2.07	18.00
TC	24	18.00	47.58
BC	39	0.17	3.46
BC	120	1.52	12.62
BC	36	12.60	15.62
BC	75	15.68	47.58

Apply purlins to any chords above or below fillers at 24" OC unless shown otherwise above.

Wind

Wind loads based on MWFRS with additional C&C member design.

Right end vertical exposed to wind pressure.
Deflection meets L/180.

Additional Notes

WARNING: Furnish a copy of this DWG to the installation contractor. Special care must be taken during handling, shipping and installation of trusses. See "WARNING" note below.

DOUGLAS FLEMING
LICENSE
No. 66648
STATE OF
FLORIDA
PROFESSIONAL ENGINEER

COA #0 278

09/15/2020

****WARNING**** READ AND FOLLOW ALL NOTES ON THIS DRAWING!
****IMPORTANT**** FURNISH THIS DRAWING TO ALL CONTRACTORS INCLUDING THE INSTALLERS

Trusses require extreme care in fabricating, handling, shipping, installing and bracing. Refer to and follow the latest edition of BCSI (Building Component Safety Information, by TPI and SBCA) for safety practices prior to performing these functions. Installers shall provide temporary bracing per BCSI. Unless noted otherwise, top chord shall have properly attached structural sheathing and bottom chord shall have a properly attached rigid ceiling. Locations shown for permanent lateral restraint of webs shall have bracing installed per BCSI sections B3, B7, or B10, as applicable. Apply plates to each face of truss and position as shown above and on the Joint Details, unless noted otherwise. Refer to drawings 160A-Z for standard plate positions. Refer to job's General Notes page for additional information.

Alpine, a division of ITW Building Components Group Inc. shall not be responsible for any deviation from this drawing, any failure to build the truss in conformance with ANSI/TPI 1, or for handling, shipping, installation and bracing of trusses. A seal on this drawing or cover page listing this drawing, indicates acceptance of professional engineering responsibility solely for the design shown. The suitability and use of this drawing for any structure is the responsibility of the Building Designer per ANSI/TPI 1 Sec.2.

For more information see these web sites: Alpine: www.alpineitw.com; TPI: www.tpinst.org; SBCA: www.sbcindustry.com; ICC: www.iccsafe.org

ALPINE
AN ITW COMPANY
6750 Forum Drive
Suite 305
Orlando FL, 32821

SEQN: 65924 COMN FROM: RNB	Ply: 1 Qty: 1	**Job Number:** b51385aa -terrell floor plan Trademark Const Group **Truss Label:** T-5	Cust: R 857 JRef:1WYP8570001 T24 DrwNo: 259.20.0959.26437 SSB / DF 09/15/2020

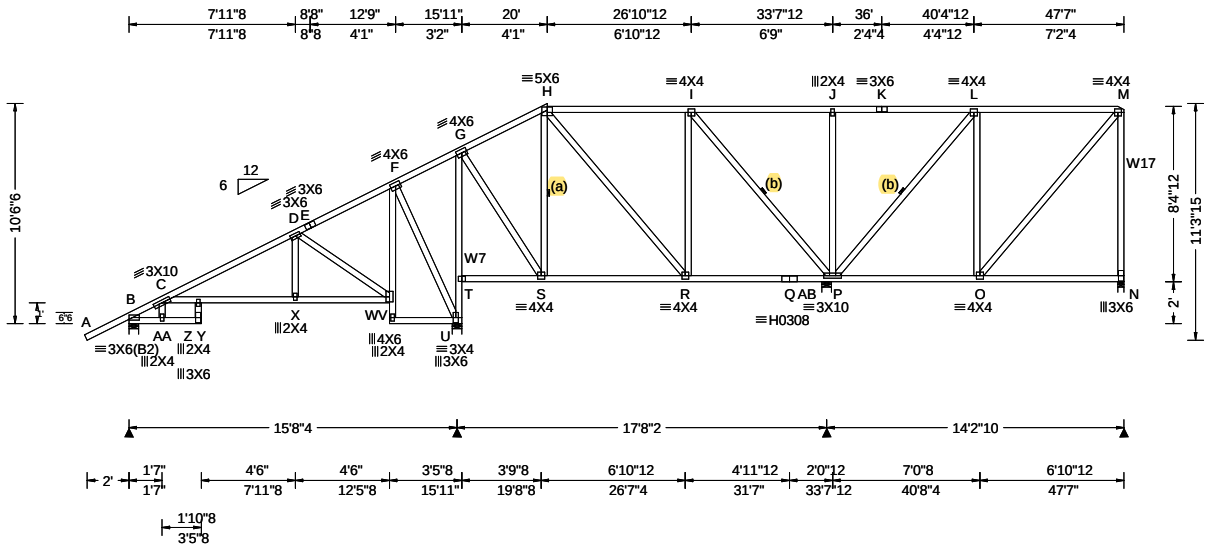

Loading Criteria (psf)

TCLL:	20.00
TCDL:	7.00
BCLL:	0.00
BCDL:	10.00
Des Ld:	37.00
NCBCLL:	10.00
Soffit:	2.00

Load Duration: 1.25
Spacing: 24.0 "

Wind Criteria
Wind Std: ASCE 7-10
Speed: 130 mph
Enclosure: Closed
Risk Category: II
EXP: B Kzt: NA
Mean Height: 15.09 ft
TCDL: 0.0 psf
BCDL: 0.0 psf
MWFRS Parallel Dist: h to 2h
C&C Dist a: 4.76 ft
Loc. from endwall: not in 13.00 ft
GCpi: 0.18
Wind Duration: 1.60

Snow Criteria (Pg,Pf in PSF)
Pg: NA Ct: NA CAT: NA
Pf: NA Ce: NA
Lu: NA Cs: NA
Snow Duration: NA

Building Code:
FBC 2017 RES
TPI Std: 2014
Rep Fac: Yes
FT/RT:20(0)/0(0)
Plate Type(s):
WAVE, HS

Defl/CSI Criteria

PP Deflection in	loc	L/defl	L/#
VERT(LL): 0.210	Y	889	360
VERT(CL): 0.397	Y	470	240
HORZ(LL): 0.104	U	-	-
HORZ(TL): 0.202	U	-	-

Creep Factor: 2.0
Max TC CSI: 0.986
Max BC CSI: 0.660
Max Web CSI: 0.536

VIEW Ver: 18.02.01A.0205.19

▲ Maximum Reactions (lbs)

Loc	Gravity R+	Gravity / R-	Gravity / Rh	Non-Gravity / Rw	Non-Gravity / U	Non-Gravity / RL
B	650	/-	/-	/340	/153	/295
U	1436	/-	/-	/877	/494	/-
AB	1087	/-	/-	/495	/332	/-
N	577	/-	/-	/273	/173	/-

Wind reactions based on MWFRS
B Brg Width = 5.5 Min Req = 1.5
U Brg Width = 5.5 Min Req = 1.8
AB Brg Width = 5.5 Min Req = 1.5
N Brg Width = 3.5 Min Req = 1.5
Bearings B, U, AB, & N Fcperp = 425psi.
Members not listed have forces less than 375#

Maximum Top Chord Forces Per Ply (lbs)

Chords	Tens.	Comp.	Chords	Tens.	Comp.
B - C	142	- 481	E - F	220	- 403
C - D	397	- 763	F - G	236	- 457
D - E	220	- 403	H - I	344	- 393

Maximum Bot Chord Forces Per Ply (lbs)

Chords	Tens.	Comp.	Chords	Tens.	Comp.
C - Z	574	- 284	R - Q	394	- 230
Z - X	638	- 328	Q - P	788	- 460
X - V	643	- 329			

Maximum Web Forces Per Ply (lbs)

Webs	Tens.	Comp.	Webs	Tens.	Comp.
D - V	348	- 667	G - S	631	- 395
V - F	434	- 190	S - H	334	- 413
F - U	260	- 523	I - P	236	- 438
U - T	640	- 955	O - M	491	- 214
T - G	635	- 917	M - N	262	- 527

Lumber

Top chord: 2x4 SP #1;
Bot chord: 2x4 SP #1;
Webs: 2x4 SP #3; W7 2x4 SP SS Dense;
W17 2x4 SP #1;

Bracing

(a) Continuous lateral restraint equally spaced on member. Or 1x4 #3SRB SPF-S or better "T" reinforcement. 80% length of web member. Attached with 8d Box or Gun (0.113"x2.5",min.)nails @ 6" oc.

(b) Continuous lateral restraint equally spaced on member. Or 2x4 #3 or better "T" reinforcement. 80% length of web member. Attached with 10d Box or Gun (0.128"x3",min.)nails @ 6" oc.

Plating Notes

Plates sized for a minimum of 3.50 sq.in./piece.

Purlins

In lieu of structural panels or rigid ceiling use purlins to laterally brace chords as follows:

Chord	Spacing(in oc)	Start(ft)	End(ft)
TC	70	-2.07	20.00
TC	24	20.00	47.57
BC	39	0.17	3.46
BC	120	1.52	12.62
BC	36	12.60	15.62
BC	75	15.68	47.58

Apply purlins to any chords above or below fillers at 24" OC unless shown otherwise above.

Wind

Wind loads based on MWFRS with additional C&C member design.

Right end vertical exposed to wind pressure. Deflection meets L/180.

Additional Notes

WARNING: Furnish a copy of this DWG to the installation contractor. Special care must be taken during handling, shipping and installation of trusses. See "WARNING" note below.

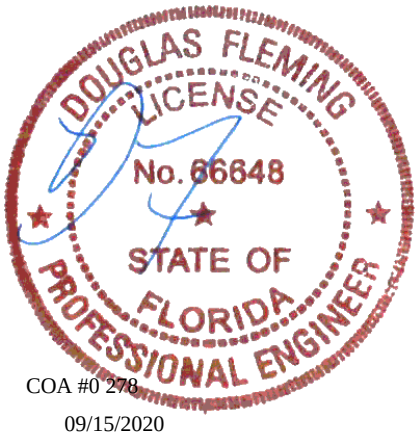

COA #0 278

09/15/2020

****WARNING**** READ AND FOLLOW ALL NOTES ON THIS DRAWING!
****IMPORTANT**** FURNISH THIS DRAWING TO ALL CONTRACTORS INCLUDING THE INSTALLERS

Trusses require extreme care in fabricating, handling, shipping, installing and bracing. Refer to and follow the latest edition of BCSI (Building Component Safety Information, by TPI and SBCA) for safety practices prior to performing these functions. Installers shall provide temporary bracing per BCSI. Unless noted otherwise, top chord shall have properly attached structural sheathing and bottom chord shall have a properly attached rigid ceiling. Locations shown for permanent lateral restraint of webs shall have bracing installed per BCSI sections B3, B7, or B10, as applicable. Apply plates to each face of truss and position as shown above and on the Joint Details, unless noted otherwise. Refer to drawings 160A-Z for standard plate positions. Refer to job's General Notes page for additional information.

Alpine, a division of ITW Building Components Group Inc. shall not be responsible for any deviation from this drawing, any failure to build the truss in conformance with ANSI/TPI 1, or for handling, shipping, installation and bracing of trusses. A seal on this drawing or cover page listing this drawing, indicates acceptance of professional engineering responsibility solely for the design shown. The suitability and use of this drawing for any structure is the responsibility of the Building Designer per ANSI/TPI 1 Sec.2.

For more information see these web sites: Alpine: www.alpineitw.com; TPI: www.tpinst.org; SBCA: www.sbcindustry.com; ICC: www.iccsafe.org

ALPINE AN ITW COMPANY
6750 Forum Drive
Suite 305
Orlando FL, 32821

SEQN: 65925 COMN FROM: RNB	Ply: 1 Qty: 1	**Job Number:** b51385aa -terrell floor plan Trademark Const Group **Truss Label:** T-6	Cust: R 857 JRef:1WYP8570001 T28 DrwNo: 259.20.0959.28533 SSB / DF 09/15/2020

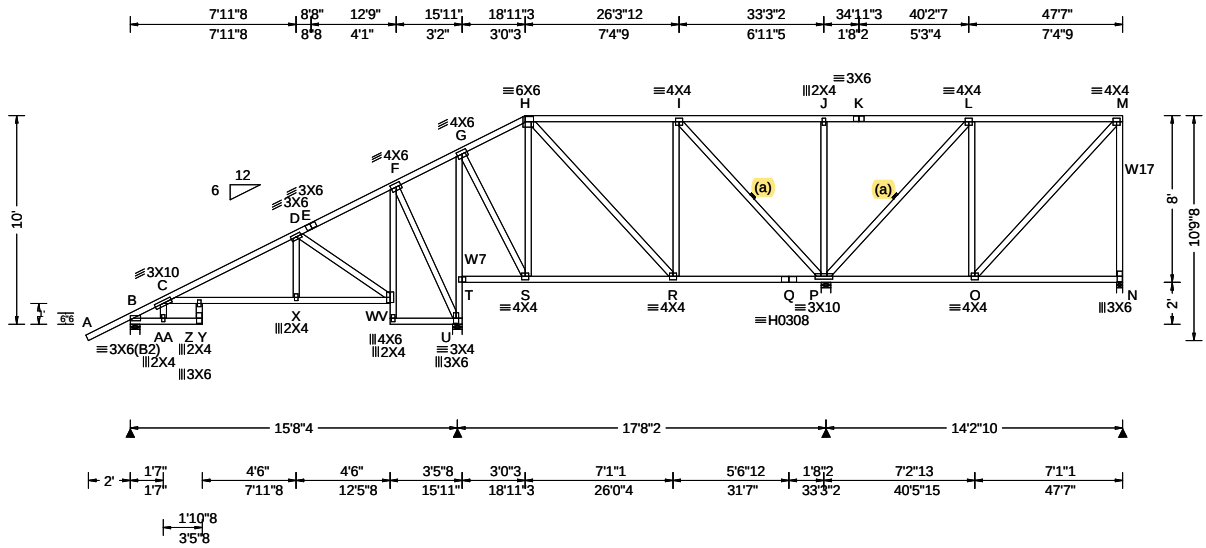

Loading Criteria (psf)

TCLL: 20.00
TCDL: 7.00
BCLL: 0.00
BCDL: 10.00
Des Ld: 37.00
NCBCLL: 10.00
Soffit: 2.00
Load Duration: 1.25
Spacing: 24.0 "

Wind Criteria

Wind Std: ASCE 7-10
Speed: 130 mph
Enclosure: Closed
Risk Category: II
EXP: B Kzt: NA
Mean Height: 15.00 ft
TCDL: 0.0 psf
BCDL: 0.0 psf
MWFRS Parallel Dist: h to 2h
C&C Dist a: 4.76 ft
Loc. from endwall: not in 13.00 ft
GCpi: 0.18
Wind Duration: 1.60

Snow Criteria (Pg,Pf in PSF)

Pg: NA Ct: NA CAT: NA
Pf: NA Ce: NA
Lu: NA Cs: NA
Snow Duration: NA

Building Code:
FBC 2017 RES
TPI Std: 2014
Rep Fac: Yes
FT/RT:20(0)/0(0)
Plate Type(s):
WAVE, HS

Defl/CSI Criteria

PP Deflection in	loc	L/defl	L/#
VERT(LL): 0.211	Y	883	360
VERT(CL): 0.398	Y	469	240
HORZ(LL): 0.107	U	-	-
HORZ(TL): 0.203	U	-	-

Creep Factor: 2.0
Max TC CSI: 0.991
Max BC CSI: 0.661
Max Web CSI: 0.693

VIEW Ver: 18.02.01A.0205.19

▲ Maximum Reactions (lbs)

Loc	Gravity R+	/ R-	/ Rh	Non-Gravity / Rw	/ U	/ RL
B	651	/-	/-	/346	/154	/280
U	1318	/-	/-	/803	/418	/-
P	1398	/-	/-	/630	/414	/-
N	458	/-	/-	/202	/128	/-

Wind reactions based on MWFRS
B Brg Width = 5.5 Min Req = 1.5
U Brg Width = 5.5 Min Req = 1.7
P Brg Width = 5.5 Min Req = 1.8
N Brg Width = 3.5 Min Req = 1.5
Bearings B, U, P, & N Fcperp = 425psi.
Members not listed have forces less than 375#

Maximum Top Chord Forces Per Ply (lbs)

Chords	Tens.	Comp.	Chords	Tens.	Comp.
B - C	135	- 455	F - G	225	- 426
C - D	404	- 767			

Maximum Bot Chord Forces Per Ply (lbs)

Chords	Tens.	Comp.	Chords	Tens.	Comp.
C - Z	577	- 289	X - V	646	- 334
Z - X	641	- 334			

Maximum Web Forces Per Ply (lbs)

Webs	Tens.	Comp.	Webs	Tens.	Comp.
D - V	346	- 667	G - S	565	- 348
V - F	435	- 190	H - S	318	- 400
F - U	272	- 523	I - P	339	- 641
U - T	558	- 831	P - L	281	- 566
T - G	550	- 800	M - N	194	- 402

Lumber

Top chord: 2x4 SP #1;
Bot chord: 2x4 SP #1;
Webs: 2x4 SP #3; W7 2x4 SP SS Dense;
W17 2x4 SP #1;

Bracing

(a) Continuous lateral restraint equally spaced on member. Or 2x4 #3 or better "T" reinforcement. 80% length of web member. Attached with 10d Box or Gun (0.128"x3",min.)nails @ 6" oc.

Plating Notes

Plates sized for a minimum of 3.50 sq.in./piece.

Purlins

In lieu of structural panels or rigid ceiling use purlins to laterally brace chords as follows:

Chord	Spacing(in oc)	Start(ft)	End(ft)
TC	70	-2.07	18.93
TC	24	18.93	47.58
BC	39	0.17	3.46
BC	120	1.52	12.62
BC	36	12.60	15.62
BC	75	15.68	47.58

Apply purlins to any chords above or below fillers at 24" OC unless shown otherwise above.

Wind

Wind loads based on MWFRS with additional C&C member design.

Right end vertical exposed to wind pressure.
Deflection meets L/180.

Additional Notes

WARNING: Furnish a copy of this DWG to the installation contractor. Special care must be taken during handling, shipping and installation of trusses. See "WARNING" note below.

DOUGLAS FLEMING LICENSE No. 66648 STATE OF FLORIDA PROFESSIONAL ENGINEER

COA #0 278

09/15/2020

****WARNING**** READ AND FOLLOW ALL NOTES ON THIS DRAWING!
****IMPORTANT**** FURNISH THIS DRAWING TO ALL CONTRACTORS INCLUDING THE INSTALLERS

Trusses require extreme care in fabricating, handling, shipping, installing and bracing. Refer to and follow the latest edition of BCSI (Building Component Safety Information, by TPI and SBCA) for safety practices prior to performing these functions. Installers shall provide temporary bracing per BCSI. Unless noted otherwise, top chord shall have properly attached structural sheathing and bottom chord shall have a properly attached rigid ceiling. Locations shown for permanent lateral restraint of webs shall have bracing installed per BCSI sections B3, B7, or B10, as applicable. Apply plates to each face of truss and position as shown above and on the Joint Details, unless noted otherwise. Refer to drawings 160A-Z for standard plate positions. Refer to job's General Notes page for additional information.

Alpine, a division of ITW Building Components Group Inc. shall not be responsible for any deviation from this drawing, any failure to build the truss in conformance with ANSI/TPI 1, or for handling, shipping, installation and bracing of trusses. A seal on this drawing or cover page listing this drawing, indicates acceptance of professional engineering responsibility solely for the design shown. The suitability and use of this drawing for any structure is the responsibility of the Building Designer per ANSI/TPI 1 Sec.2.

For more information see these web sites: Alpine: www.alpineitw.com; TPI: www.tpinst.org; SBCA: www.sbcindustry.com; ICC: www.iccsafe.org

ALPINE AN ITW COMPANY
6750 Forum Drive
Suite 305
Orlando FL, 32821

SEQN: 65926 COMN FROM: RNB	Ply: 1 Qty: 1	**Job Number:** b51385aa -terrell floor plan Trademark Const Group **Truss Label:** T-7	Cust: R 857 JRef:1WYP8570001 T25 DrwNo: 259.20.0959.39700 SSB / DF 09/15/2020

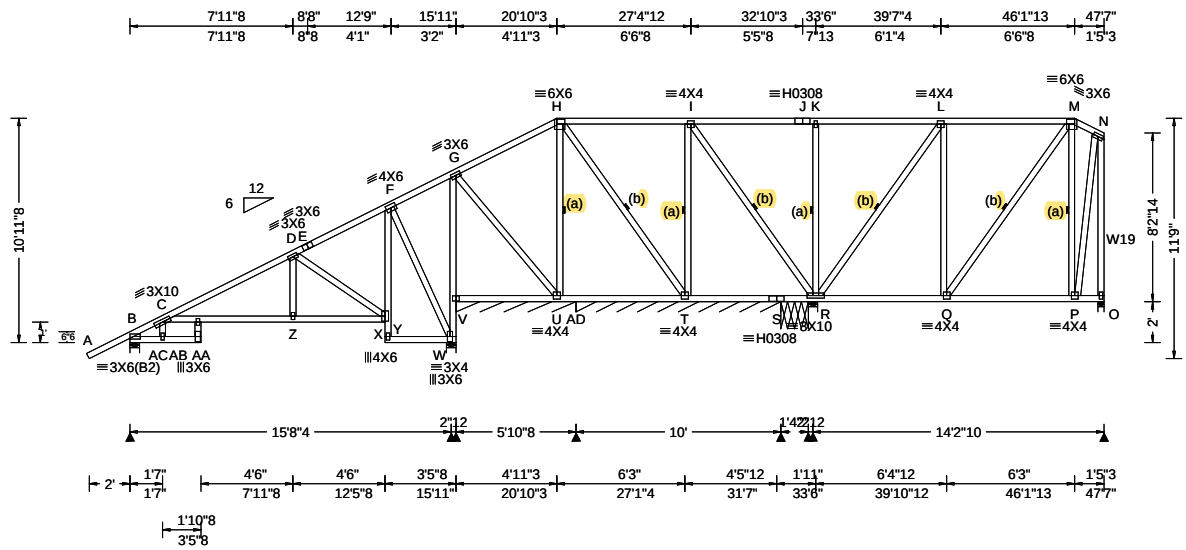

Loading Criteria (psf)

TCLL: 20.00
TCDL: 7.00
BCLL: 0.00
BCDL: 10.00
Des Ld: 37.00
NCBCLL: 10.00
Soffit: 2.00
Load Duration: 1.25
Spacing: 24.0 "

Wind Criteria

Wind Std: ASCE 7-10
Speed: 130 mph
Enclosure: Closed
Risk Category: II
EXP: B Kzt: NA
Mean Height: 15.00 ft
TCDL: 0.0 psf
BCDL: 0.0 psf
MWFRS Parallel Dist: h to 2h
C&C Dist a: 4.76 ft
Loc. from endwall: not in 13.00 ft
GCpi: 0.18
Wind Duration: 1.60

Snow Criteria (Pg,Pf in PSF)

Pg: NA Ct: NA CAT: NA
Pf: NA Ce: NA
Lu: NA Cs: NA
Snow Duration: NA

Building Code:
FBC 2017 RES
TPI Std: 2014
Rep Fac: Yes
FT/RT:20(0)/0(0)
Plate Type(s):
WAVE, HS

Defl/CSI Criteria

PP Deflection in	loc	L/defl	L/#
VERT(LL): 0.212	AA	878	360
VERT(CL): 0.400	AA	465	240
HORZ(LL): 0.109	W	-	-
HORZ(TL): 0.209	W	-	-

Creep Factor: 2.0
Max TC CSI: 0.985
Max BC CSI: 0.666
Max Web CSI: 0.905

VIEW Ver: 18.02.01A.0205.19

▲ Maximum Reactions (lbs), or *=PLF

	Gravity			Non-Gravity		
Loc	R+	/ R-	/ Rh	/ Rw	/ U	/ RL
B	654	/-	/-	/340	/154	/300
W	1934	/-	/-	/1210	/527	/-
V*	-	/-166	/-	/48	/70	/-
AD*53		/-	/-	/28	/14	/-
S*	-	/-83	/-	/1	/42	/-
R	1032	/-	/-	/460	/329	/-
O	425	/-	/-	/215	/92	/-
V		/-1159				
S		/-111				

Wind reactions based on MWFRS

B	Brg Width = 5.5	Min Req = 1.5
W	Brg Width = 5.5	Min Req = 2.4
V	Brg Width = 70.5	Min Req = -
AD	Brg Width = 120	Min Req = -
S	Brg Width = 16.1	Min Req = -
R	Brg Width = 5.5	Min Req = 1.5
O	Brg Width = 3.5	Min Req = 1.5

Bearings B, W, V, AD, S, R, & O Fcperp = 425psi.

Members not listed have forces less than 375#

Maximum Top Chord Forces Per Ply (lbs)

Chords	Tens.	Comp.	Chords	Tens.	Comp.
B - C	153	- 459	F - G	239	- 429
C - D	412	- 777			

Maximum Bot Chord Forces Per Ply (lbs)

Chords	Tens.	Comp.	Chords	Tens.	Comp.
C -AB	586	- 295	Z - X	655	- 340
AB- Z	650	- 339			

Maximum Web Forces Per Ply (lbs)

Webs	Tens.	Comp.	Webs	Tens.	Comp.
C -AC	259	- 376	V - G	348	- 401
D - X	352	- 672	R - L	300	- 558
X - F	433	- 191	P - N	441	- 219
F - W	240	- 517	N - O	176	- 438
W - V	678	- 1450			

Lumber

Top chord: 2x4 SP #1;
Bot chord: 2x4 SP #1;
Webs: 2x4 SP #3; W19 2x4 SP #1;

Bracing

(a) Continuous lateral restraint equally spaced on member. Or 1x4 #3SRB SPF-S or better "T" reinforcement. 80% length of web member. Attached with 8d Box or Gun (0.113"x2.5",min.)nails @ 6" oc.

(b) Continuous lateral restraint equally spaced on member. Or 2x4 #3 or better "T" reinforcement. 80% length of web member. Attached with 10d Box or Gun (0.128"x3",min.)nails @ 6" oc.

Plating Notes

All plates are 2X4 except as noted.

Plates sized for a minimum of 3.50 sq.in./piece.

Purlins

In lieu of structural panels or rigid ceiling use purlins to laterally brace chords as follows:

Chord	Spacing(in oc)	Start(ft)	End(ft)
TC	69	-2.07	20.85
TC	24	20.85	46.15
TC	19	46.15	47.58
BC	39	0.17	3.46
BC	120	1.52	12.62
BC	36	12.60	15.62
BC	75	15.68	47.58

Apply purlins to any chords above or below fillers at 24" OC unless shown otherwise above.

Wind

Wind loads based on MWFRS with additional C&C member design.

Right end vertical exposed to wind pressure. Deflection meets L/180.

Additional Notes

Negative reaction(s) of -978# MAX. from a non-wind load case requires uplift connection. See Maximum Reactions.

WARNING: Furnish a copy of this DWG to the installation contractor. Special care must be taken during handling, shipping and installation of trusses. See "WARNING" note below.

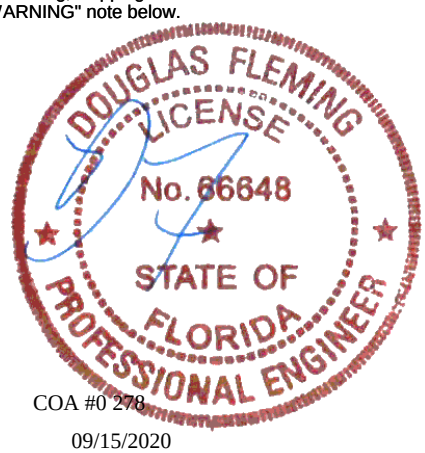

COA #0 278

09/15/2020

****WARNING**** READ AND FOLLOW ALL NOTES ON THIS DRAWING!
****IMPORTANT**** FURNISH THIS DRAWING TO ALL CONTRACTORS INCLUDING THE INSTALLERS

Trusses require extreme care in fabricating, handling, shipping, installing and bracing. Refer to and follow the latest edition of BCSI (Building Component Safety Information, by TPI and SBCA) for safety practices prior to performing these functions. Installers shall provide temporary bracing per BCSI. Unless noted otherwise, top chord shall have properly attached structural sheathing and bottom chord shall have a properly attached rigid ceiling. Locations shown for permanent lateral restraint of webs shall have bracing installed per BCSI sections B3, B7, or B10, as applicable. Apply plates to each face of truss and position as shown above and on the Joint Details, unless noted otherwise. Refer to drawings 160A-Z for standard plate positions. Refer to job's General Notes page for additional information.

Alpine, a division of ITW Building Components Group Inc. shall not be responsible for any deviation from this drawing, any failure to build the truss in conformance with ANSI/TPI 1, or for handling, shipping, installation and bracing of trusses. A seal on this drawing or cover page listing this drawing, indicates acceptance of professional engineering responsibility solely for the design shown. The suitability and use of this drawing for any structure is the responsibility of the Building Designer per ANSI/TPI 1 Sec.2.

For more information see these web sites: Alpine: www.alpineitw.com; TPI: www.tpinst.org; SBCA: www.sbcindustry.com; ICC: www.iccsafe.org

ALPINE
AN ITW COMPANY
6750 Forum Drive
Suite 305
Orlando FL, 32821

SEQN: 65927 COMN	Ply: 1	**Job Number:** b51385aa	Cust: R 857 JRef:1WYP8570001 T62
FROM: RNB	Qty: 3	-terrell floor plan Trademark Const Group	DrwNo: 259.20.0959.42830
Page 1 of 2		**Truss Label:** T-8	SSB / DF 09/15/2020

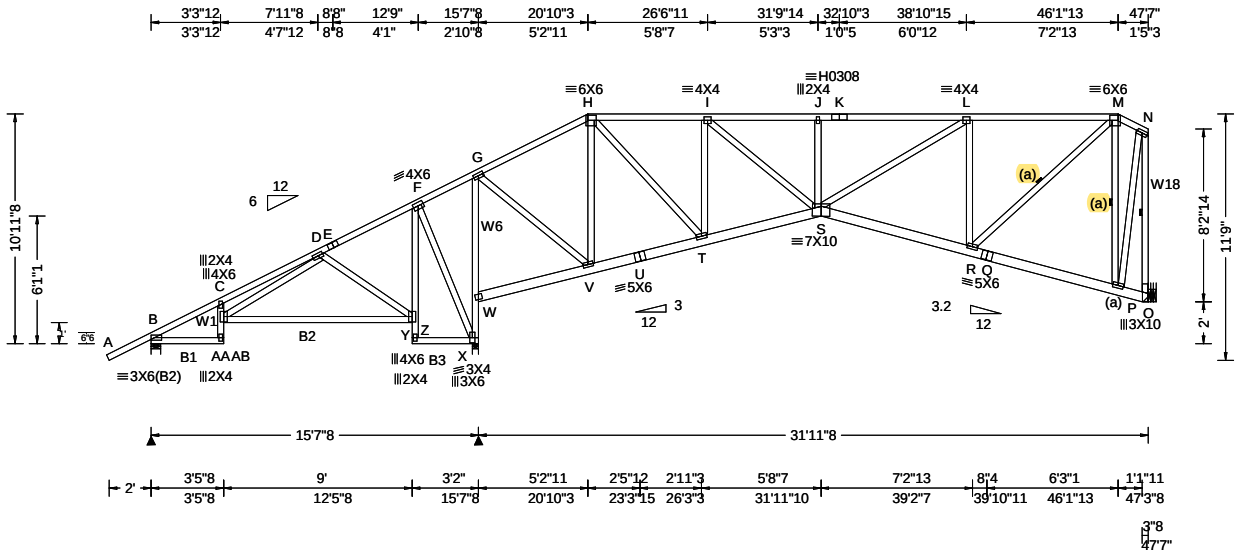

Loading Criteria (psf)

TCLL: 20.00
TCDL: 7.00
BCLL: 0.00
BCDL: 10.00
Des Ld: 37.00
NCBCLL: 0.00
Soffit: 2.00
Load Duration: 1.25
Spacing: 24.0 "

Wind Criteria

Wind Std: ASCE 7-10
Speed: 130 mph
Enclosure: Closed
Risk Category: II
EXP: B Kzt: NA
Mean Height: 15.00 ft
TCDL: 0.0 psf
BCDL: 0.0 psf
MWFRS Parallel Dist: h to 2h
C&C Dist a: 4.76 ft
Loc. from endwall: not in 13.00 ft
GCpi: 0.18
Wind Duration: 1.60

Snow Criteria (Pg,Pf in PSF)

Pg: NA Ct: NA CAT: NA
Pf: NA Ce: NA
Lu: NA Cs: NA
Snow Duration: NA

Building Code:
FBC 2017 RES
TPI Std: 2014
Rep Fac: Yes
FT/RT:20(0)/0(0)
Plate Type(s):
WAVE, HS

Defl/CSI Criteria

PP Deflection in	loc	L/defl	L/#
VERT(LL): 0.122	AA	999	360
VERT(CL): 0.230	AA	796	240
HORZ(LL): 0.071	Y	-	-
HORZ(TL): 0.134	Y	-	-

Creep Factor: 2.0
Max TC CSI: 0.986
Max BC CSI: 0.388
Max Web CSI: 0.898

VIEW Ver: 18.02.01A.0205.19

▲Maximum Reactions (lbs)

	Gravity			Non-Gravity		
Loc	R+	/ R-	/ Rh	/ Rw	/ U	/ RL
B	597	/-	/-	/308	/143	/299
X	1973	/-	/-	/1142	/626	/-
O	1174	/-	/-	/562	/337	/-

Wind reactions based on MWFRS
B Brg Width = 5.5 Min Req = 1.5
X Brg Width = 3.5 Min Req = 2.5
O Brg Width = - Min Req = -
Bearings B & X Fcperp = 425psi.
Members not listed have forces less than 375#

Maximum Top Chord Forces Per Ply (lbs)

Chords	Tens.	Comp.	Chords	Tens.	Comp.
B - C	295	- 601	H - I	751	- 1331
C - D	679	- 1387	I - J	992	- 2049
D - E	171	- 415	J - K	985	- 2038
E - F	171	- 415	K - L	985	- 2038
F - G	298	- 455	L - M	649	- 1176
G - H	473	- 734			

Maximum Bot Chord Forces Per Ply (lbs)

Chords	Tens.	Comp.	Chords	Tens.	Comp.
B -AB	464	- 282	U - T	621	- 367
AA- Y	391	- 249	T - S	1420	- 746
V - U	606	- 367	S - R	1268	- 690

Maximum Web Forces Per Ply (lbs)

Webs	Tens.	Comp.	Webs	Tens.	Comp.
C -AA	279	- 407	H - T	1092	- 517
AA- D	982	- 531	T - I	464	- 869
D - Y	302	- 494	I - S	888	- 452
Y - F	409	- 172	S - L	986	- 475
F - X	249	- 504	L - R	529	- 971
X - W	868	- 1503	R - M	1310	- 614
W - G	832	- 1369	P - M	623	- 1085
G - V	1067	- 591	P - N	1110	- 574
H - V	509	- 802	N - O	543	- 1148

Lumber

Top chord: 2x4 SP #1;
Bot chord: 2x6 SP #1; B1,B2,B3 2x4 SP #1;
Webs: 2x4 SP #3; W1,W6 2x4 SP SS Dense;
W18 2x4 SP #1;

Bracing

(a) Continuous lateral restraint equally spaced on member. Or 1x4 #3SRB SPF-S or better "T" reinforcement. 80% length of web member. Attached with 8d Box or Gun (0.113"x2.5",min.)nails @ 6" oc.

Plating Notes

All plates are 3X6 except as noted.

Plates sized for a minimum of 3.50 sq.in./piece.

Purlins

In lieu of structural panels or rigid ceiling use purlins to laterally brace chords as follows:

Chord	Spacing(in oc)	Start(ft)	End(ft)
TC	59	-2.07	20.85
TC	24	20.85	46.15
TC	19	46.15	47.58
BC	38	0.17	3.31
BC	112	3.27	12.62
BC	33	12.60	15.33
BC	75	15.39	31.97
BC	75	31.97	47.58

Apply purlins to any chords above or below fillers at 24" OC unless shown otherwise above.

Wind

Wind loads based on MWFRS with additional C&C member design.

Right end vertical exposed to wind pressure. Deflection meets L/180.

Additional Notes

WARNING: Furnish a copy of this DWG to the installation contractor. Special care must be taken during handling, shipping and installation of trusses. See "WARNING" note below.

Shim all supports to solid bearing.

DOUGLAS FLEMING LICENSE No. 66648 STATE OF FLORIDA PROFESSIONAL ENGINEER

COA #0 278

09/15/2020

****WARNING**** READ AND FOLLOW ALL NOTES ON THIS DRAWING!
****IMPORTANT**** FURNISH THIS DRAWING TO ALL CONTRACTORS INCLUDING THE INSTALLERS

Trusses require extreme care in fabricating, handling, shipping, installing and bracing. Refer to and follow the latest edition of BCSI (Building Component Safety Information, by TPI and SBCA) for safety practices prior to performing these functions. Installers shall provide temporary bracing per BCSI. Unless noted otherwise, top chord shall have properly attached structural sheathing and bottom chord shall have a properly attached rigid ceiling. Locations shown for permanent lateral restraint of webs shall have bracing installed per BCSI sections B3, B7, or B10, as applicable. Apply plates to each face of truss and position as shown above and on the Joint Details, unless noted otherwise. Refer to drawings 160A-Z for standard plate positions. Refer to job's General Notes page for additional information.

Alpine, a division of ITW Building Components Group Inc. shall not be responsible for any deviation from this drawing, any failure to build the truss in conformance with ANSI/TPI 1, or for handling, shipping, installation and bracing of trusses. A seal on this drawing or cover page listing this drawing, indicates acceptance of professional engineering responsibility solely for the design shown. The suitability and use of this drawing for any structure is the responsibility of the Building Designer per ANSI/TPI 1 Sec.2.

For more information see these web sites: Alpine: www.alpineitw.com; TPI: www.tpinst.org; SBCA: www.sbcindustry.com; ICC: www.iccsafe.org

ALPINE AN ITW COMPANY
6750 Forum Drive
Suite 305
Orlando FL, 32821

Hangers / Ties

Simpson Construction Hardware is specified based on the most current information provided by Simpson Strong-Tie. Please refer to the most recent Simpson Strong-Tie catalog for additional information.

Recommended hanger connections are based on manufacturer tested capacities and calculations. Conditions may exist that require different connections than indicated. Refer to manufacturer publication for additional information.

Bearing at location x=47'4" uses the following support conditions: 47'4"
Bearing O (47'4", 12'1"2) HGUS26
Supporting Member: (3)2x8 SP SS Dense
(20) 0.148"x3" nails into supporting member,
(6) 0.148"x3" nails into supported member.

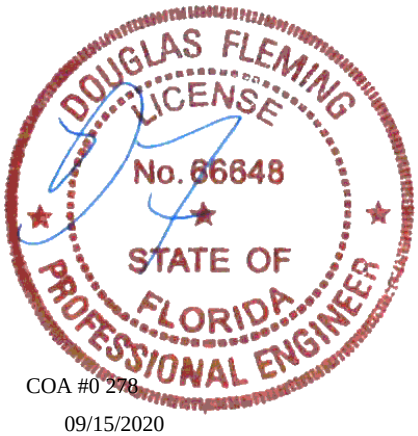

COA #0 278

09/15/2020

****WARNING**** READ AND FOLLOW ALL NOTES ON THIS DRAWING!
****IMPORTANT**** FURNISH THIS DRAWING TO ALL CONTRACTORS INCLUDING THE INSTALLERS

Trusses require extreme care in fabricating, handling, shipping, installing and bracing. Refer to and follow the latest edition of BCSI (Building Component Safety Information, by TPI and SBCA) for safety practices prior to performing these functions. Installers shall provide temporary bracing per BCSI. Unless noted otherwise, top chord shall have properly attached structural sheathing and bottom chord shall have a properly attached rigid ceiling. Locations shown for permanent lateral restraint of webs shall have bracing installed per BCSI sections B3, B7, or B10, as applicable. Apply plates to each face of truss and position as shown above and on the Joint Details, unless noted otherwise. Refer to drawings 160A-Z for standard plate positions. Refer to job's General Notes page for additional information.

Alpine, a division of ITW Building Components Group Inc. shall not be responsible for any deviation from this drawing, any failure to build the truss in conformance with ANSI/TPI 1, or for handling, shipping, installation and bracing of trusses. A seal on this drawing or cover page listing this drawing, indicates acceptance of professional engineering responsibility solely for the design shown. The suitability and use of this drawing for any structure is the responsibility of the Building Designer per ANSI/TPI 1 Sec.2.

For more information see these web sites: Alpine: www.alpineitw.com; TPI: www.tpinst.org; SBCA: www.sbcindustry.com; ICC: www.iccsafe.org

ALPINE AN ITW COMPANY
6750 Forum Drive
Suite 305
Orlando FL, 32821

SEQN: 65928 COMN	Ply: 1	**Job Number:** b51385aa	Cust: R 857 JRef:1WYP8570001 T77
FROM: RNB	Qty: 6	-terrell floor plan Trademark Const Group	DrwNo: 259.20.0959.59100
Page 1 of 2		**Truss Label:** T-9	SSB / DF 09/15/2020

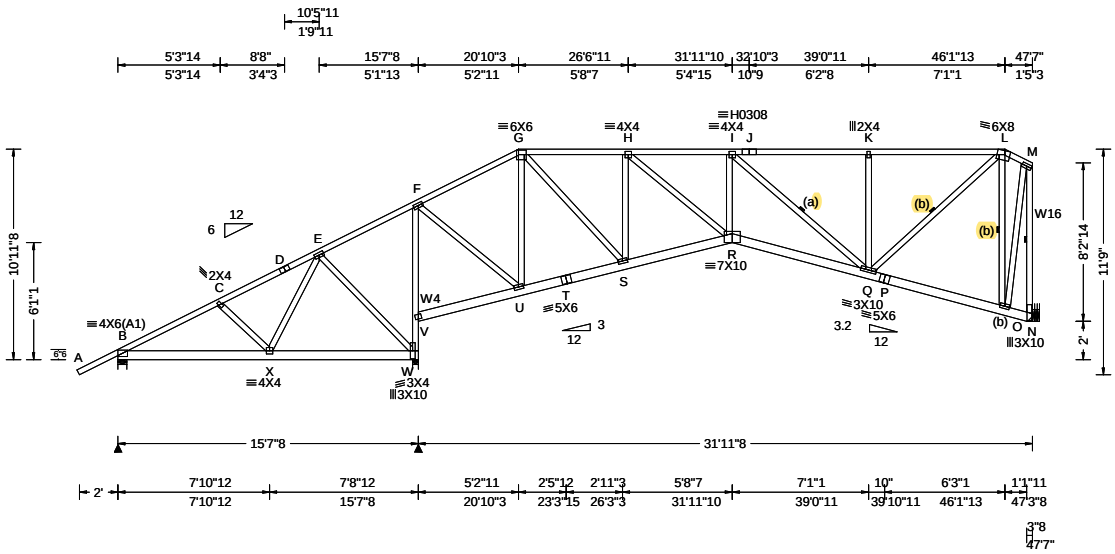

Loading Criteria (psf)

TCLL: 20.00
TCDL: 7.00
BCLL: 0.00
BCDL: 10.00
Des Ld: 37.00
NCBCLL: 0.00
Soffit: 2.00
Load Duration: 1.25
Spacing: 24.0 "

Wind Criteria

Wind Std: ASCE 7-10
Speed: 130 mph
Enclosure: Closed
Risk Category: II
EXP: B Kzt: NA
Mean Height: 15.00 ft
TCDL: 0.0 psf
BCDL: 0.0 psf
MWFRS Parallel Dist: > 2h
C&C Dist a: 4.76 ft
Loc. from endwall: not in 13.00 ft
GCpi: 0.18
Wind Duration: 1.60

Snow Criteria (Pg,Pf in PSF)

Pg: NA Ct: NA CAT: NA
Pf: NA Ce: NA
Lu: NA Cs: NA
Snow Duration: NA

Building Code:
FBC 2017 RES
TPI Std: 2014
Rep Fac: Yes
FT/RT:20(0)/0(0)
Plate Type(s):
WAVE, HS

Defl/CSI Criteria

PP Deflection in	loc	L/defl	L/#
VERT(LL): 0.114	R	999	360
VERT(CL): 0.216	R	999	240
HORZ(LL): 0.038	N	-	-
HORZ(TL): 0.072	N	-	-

Creep Factor: 2.0
Max TC CSI: 0.830
Max BC CSI: 0.313
Max Web CSI: 0.942

VIEW Ver: 18.02.01A.0205.19

▲ Maximum Reactions (lbs)

	Gravity			Non-Gravity		
Loc	R+	/ R-	/ Rh	/ Rw	/ U	/ RL
B	648	/-	/-	/348	/142	/299
W	1899	/-	/-	/1085	/604	/-
N	1197	/-	/-	/570	/343	/-

Wind reactions based on MWFRS
B Brg Width = 5.5 Min Req = 1.5
W Brg Width = 3.5 Min Req = 2.4
N Brg Width = - Min Req = -
Bearings B & W Fcperp = 425psi.
Members not listed have forces less than 375#

Maximum Top Chord Forces Per Ply (lbs)

Chords	Tens.	Comp.	Chords	Tens.	Comp.
B - C	360	- 690	G - H	786	- 1414
C - D	311	- 495	H - I	1024	- 2124
D - E	311	- 415	I - J	672	- 1231
E - F	218	- 427	J - K	672	- 1231
F - G	515	- 830	K - L	674	- 1235

Maximum Bot Chord Forces Per Ply (lbs)

Chords	Tens.	Comp.	Chords	Tens.	Comp.
B - X	562	- 312	S - R	1504	- 788
U - T	694	- 410	R - Q	2212	- 1146
T - S	709	- 410			

Maximum Web Forces Per Ply (lbs)

Webs	Tens.	Comp.	Webs	Tens.	Comp.
X - E	386	- 143	H - R	878	- 447
E - W	265	- 515	I - R	471	- 190
W - V	856	- 1465	I - Q	584	- 1204
V - F	843	- 1376	Q - K	268	- 430
F - U	1029	- 572	Q - L	1369	- 646
G - U	485	- 754	O - L	630	- 1098
G - S	1086	- 514	O - M	1127	- 580
S - H	463	- 867	M - N	554	- 1173

Lumber

Top chord: 2x4 SP #1;
Bot chord: 2x6 SP #1;
Webs: 2x4 SP #3; W4 2x4 SP SS Dense;
W16 2x4 SP #1;

Bracing

(b) Continuous lateral restraint equally spaced on member. Or 1x4 #3SRB SPF-S or better "T" reinforcement. 80% length of web member. Attached with 8d Box or Gun (0.113"x2.5",min.)nails @ 6" oc.

(a) Continuous lateral restraint equally spaced on member. Or 2x6 #3 or better "T" reinforcement. 80% length of web member. Attached with 10d Box or Gun (0.128"x3",min.)nails @ 6" oc.

Plating Notes

All plates are 3X6 except as noted.

Plates sized for a minimum of 3.50 sq.in./piece.

Purlins

In lieu of structural panels or rigid ceiling use purlins to laterally brace chords as follows:

Chord	Spacing(in oc)	Start(ft)	End(ft)
TC	75	-2.07	20.85
TC	24	20.85	46.15
TC	19	46.15	47.58
BC	120	0.15	15.33
BC	75	15.39	31.97
BC	75	31.97	47.58

Apply purlins to any chords above or below fillers at 24" OC unless shown otherwise above.

Wind

Wind loads based on MWFRS with additional C&C member design.

Right end vertical exposed to wind pressure. Deflection meets L/180.

Additional Notes

WARNING: Furnish a copy of this DWG to the installation contractor. Special care must be taken during handling, shipping and installation of trusses. See "WARNING" note below.

Shim all supports to solid bearing.

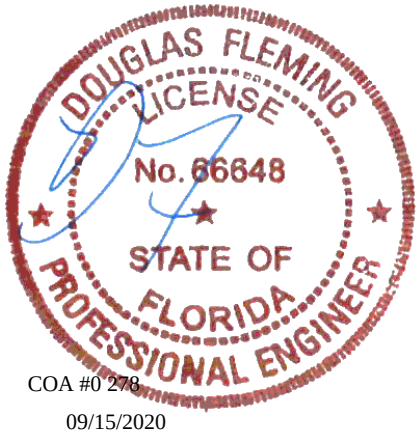

COA #0 278

09/15/2020

****WARNING**** READ AND FOLLOW ALL NOTES ON THIS DRAWING!
****IMPORTANT**** FURNISH THIS DRAWING TO ALL CONTRACTORS INCLUDING THE INSTALLERS

Trusses require extreme care in fabricating, handling, shipping, installing and bracing. Refer to and follow the latest edition of BCSI (Building Component Safety Information, by TPI and SBCA) for safety practices prior to performing these functions. Installers shall provide temporary bracing per BCSI. Unless noted otherwise, top chord shall have properly attached structural sheathing and bottom chord shall have a properly attached rigid ceiling. Locations shown for permanent lateral restraint of webs shall have bracing installed per BCSI sections B3, B7, or B10, as applicable. Apply plates to each face of truss and position as shown above and on the Joint Details, unless noted otherwise. Refer to drawings 160A-Z for standard plate positions. Refer to job's General Notes page for additional information.

Alpine, a division of ITW Building Components Group Inc. shall not be responsible for any deviation from this drawing, any failure to build the truss in conformance with ANSI/TPI 1, or for handling, shipping, installation and bracing of trusses. A seal on this drawing or cover page listing this drawing, indicates acceptance of professional engineering responsibility solely for the design shown. The suitability and use of this drawing for any structure is the responsibility of the Building Designer per ANSI/TPI 1 Sec.2.

For more information see these web sites: Alpine: www.alpineitw.com; TPI: www.tpinst.org; SBCA: www.sbcindustry.com; ICC: www.iccsafe.org

ALPINE AN ITW COMPANY
6750 Forum Drive
Suite 305
Orlando FL, 32821

Hangers / Ties

Simpson Construction Hardware is specified based on the most current information provided by Simpson Strong-Tie. Please refer to the most recent Simpson Strong-Tie catalog for additional information.

Recommended hanger connections are based on manufacturer tested capacities and calculations. Conditions may exist that require different connections than indicated. Refer to manufacturer publication for additional information.

Bearing at location x=47'4" uses the following support conditions: 47'4"
Bearing N (47'4", 12'1"2) HGUS26
Supporting Member: (3)2x8 SP SS Dense
(20) 0.148"x3" nails into supporting member,
(6) 0.148"x3" nails into supported member.

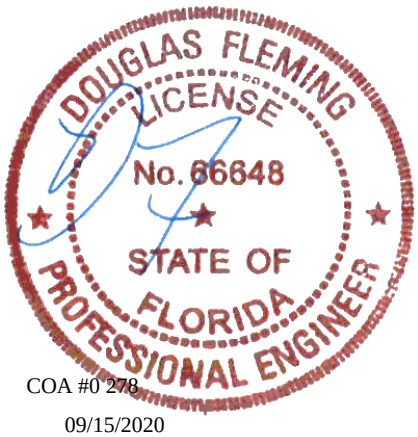

COA #0 278

09/15/2020

****WARNING**** READ AND FOLLOW ALL NOTES ON THIS DRAWING!
****IMPORTANT**** FURNISH THIS DRAWING TO ALL CONTRACTORS INCLUDING THE INSTALLERS

Trusses require extreme care in fabricating, handling, shipping, installing and bracing. Refer to and follow the latest edition of BCSI (Building Component Safety Information, by TPI and SBCA) for safety practices prior to performing these functions. Installers shall provide temporary bracing per BCSI. Unless noted otherwise, top chord shall have properly attached structural sheathing and bottom chord shall have a properly attached rigid ceiling. Locations shown for permanent lateral restraint of webs shall have bracing installed per BCSI sections B3, B7, or B10, as applicable. Apply plates to each face of truss and position as shown above and on the Joint Details, unless noted otherwise. Refer to drawings 160A-Z for standard plate positions. Refer to job's General Notes page for additional information.

Alpine, a division of ITW Building Components Group Inc. shall not be responsible for any deviation from this drawing, any failure to build the truss in conformance with ANSI/TPI 1, or for handling, shipping, installation and bracing of trusses. A seal on this drawing or cover page listing this drawing, indicates acceptance of professional engineering responsibility solely for the design shown. The suitability and use of this drawing for any structure is the responsibility of the Building Designer per ANSI/TPI 1 Sec.2.

For more information see these web sites: Alpine: www.alpineitw.com; TPI: www.tpinst.org; SBCA: www.sbcindustry.com; ICC: www.iccsafe.org

ALPINE AN ITW COMPANY
6750 Forum Drive
Suite 305
Orlando FL, 32821

SEQN: 65943 COMN	Ply: 1	**Job Number:** b51385aa	Cust: R 857 JRef:1WYP8570001 T68
FROM: RNB	Qty: 1	-terrell floor plan Trademark Const Group	DrwNo: 259.20.1000.05767
Page 1 of 2		**Truss Label:** TG-1	SSB / DF 09/15/2020

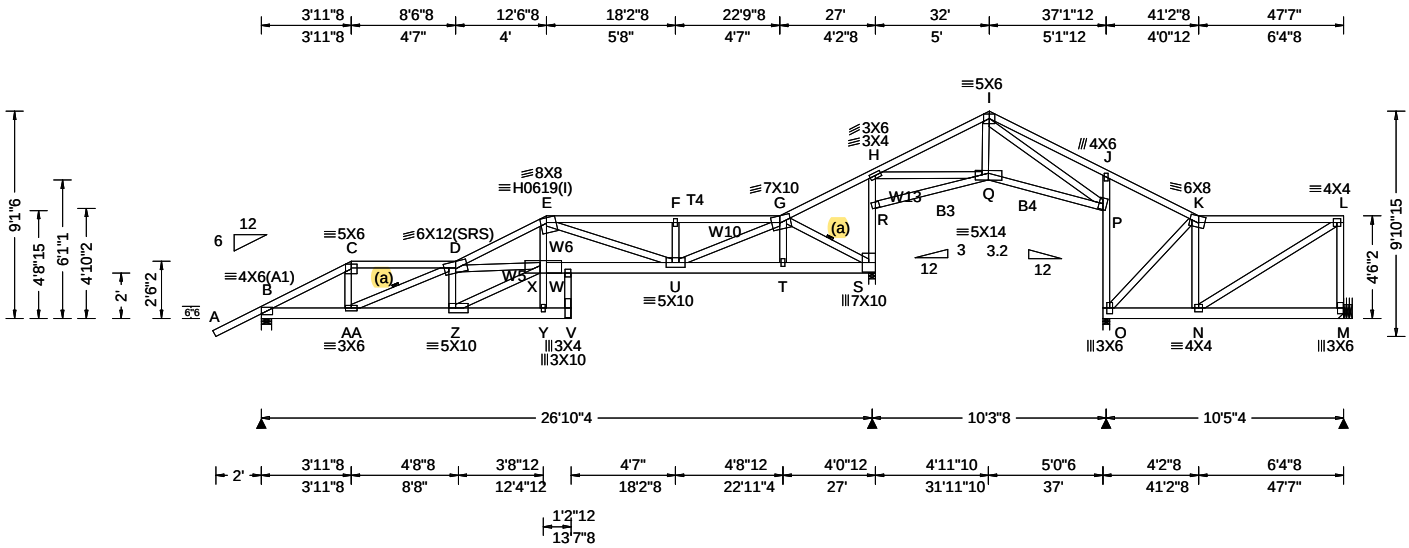

Loading Criteria (psf)		**Wind Criteria**	**Snow Criteria** (Pg,Pf in PSF)	**Defl/CSI Criteria**				
TCLL:	20.00	Wind Std: ASCE 7-10	Pg: NA Ct: NA CAT: NA	PP Deflection in	loc	L/defl	L/#	
TCDL:	7.00	Speed: 130 mph	Pf: NA Ce: NA	VERT(LL): 0.380	V	838	360	
BCLL:	0.00	Enclosure: Closed	Lu: NA Cs: NA	VERT(CL): 0.713	V	447	240	
BCDL:	10.00	Risk Category: II	Snow Duration: NA	HORZ(LL): 0.096	S	-	-	
Des Ld:	37.00	EXP: B Kzt: NA		HORZ(TL): 0.180	S	-	-	
NCBCLL:	10.00	Mean Height: 15.00 ft	Building Code:	Creep Factor: 2.0				
Soffit:	2.00	TCDL: 0.0 psf	FBC 2017 RES	Max TC CSI: 0.979				
Load Duration: 1.25		BCDL: 0.0 psf	TPI Std: 2014	Max BC CSI: 0.961				
Spacing: 24.0 "		MWFRS Parallel Dist: 0 to h/2	Rep Fac: Varies by Ld Case	Max Web CSI: 0.936				
		C&C Dist a: 4.76 ft	FT/RT:20(0)/0(0)					
		Loc. from endwall: Any	Plate Type(s):					
		GCpi: 0.18	WAVE, HS	VIEW Ver: 18.02.01A.0205.19				
		Wind Duration: 1.60						

▲ Maximum Reactions (lbs)

	Gravity			Non-Gravity		
Loc	R+	/ R-	/ Rh	/ Rw	/ U	/ RL
B	1975	/-	/-	/-	/615	/57
S	2308	/-	/-	/-	/681	/-
O	822	/-	/-	/-	/232	/-
M	608	/-	/-	/-	/206	/-

Wind reactions based on MWFRS

B	Brg Width = 5.5	Min Req = 2.5	
S	Brg Width = 3.5	Min Req = 2.9	
O	Brg Width = 3.5	Min Req = 1.5	
M	Brg Width = -	Min Req = -	

Bearings B, S, & O Fcperp = 425psi.

Members not listed have forces less than 375#

Lumber

Top chord: 2x4 SP #1; T4 2x4 SP SS Dense;
Bot chord: 2x6 SP #1; B3,B4 2x4 SP #1;
Webs: 2x4 SP #3; W5,W6,W10,W13 2x4 SP #1;

Bracing

(a) Continuous lateral restraint equally spaced on member. Or 1x4 #3SRB SPF-S or better "T" reinforcement. 80% length of web member. Attached with 8d Box or Gun (0.113"x2.5",min.)nails @ 6" oc.

Special Loads

------(Lumber Dur.Fac.=1.25 / Plate Dur.Fac.=1.25)

TC: From	56 plf at	-2.13 to	56 plf at	47.58	
BC: From	4 plf at	-2.13 to	4 plf at	0.00	
BC: From	20 plf at	0.00 to	20 plf at	27.00	
BC: From	21 plf at	27.00 to	21 plf at	31.97	
BC: From	21 plf at	31.97 to	21 plf at	37.00	
BC: From	20 plf at	37.00 to	20 plf at	47.58	

TC: 112 lb Conc. Load at 4.02
TC: 110 lb Conc. Load at 13.56
TC: 77 lb Conc. Load at 14.73,16.73,18.73,20.73 22.73
TC: 92 lb Conc. Load at 45.23
BC: 389 lb Conc. Load at 4.02
BC: 308 lb Conc. Load at 13.56
BC: 71 lb Conc. Load at 14.73,16.73,18.73,20.73 22.73
BC: 198 lb Conc. Load at 45.23

Wind

Wind loads and reactions based on MWFRS.

Right end vertical exposed to wind pressure.
Deflection meets L/180.

Plating Notes

All plates are 2X4 except as noted.

(I) - plates so marked were sized using 0% Fabrication Tolerance, 0 degrees Rotational Tolerance, and/or zero Positioning Tolerance.

Plates sized for a minimum of 3.50 sq.in./piece.

Additional Notes

WARNING: Furnish a copy of this DWG to the installation contractor. Special care must be taken during handling, shipping and installation of trusses. See "WARNING" note below.

Maximum Top Chord Forces Per Ply (lbs)

Chords	Tens.	Comp.	Chords	Tens.	Comp.
B - C	1011	- 3312	F - G	1599	- 5234
C - D	880	- 2899	H - I	122	- 409
D - E	2102	- 6925	K - L	172	- 375
E - F	1599	- 5234			

Maximum Bot Chord Forces Per Ply (lbs)

Chords	Tens.	Comp.	Chords	Tens.	Comp.
B -AA	2899	- 823	W - U	6139	- 1803
AA- Z	4841	- 1443	U - T	2759	- 827
X - W	6176	- 1814	T - S	2773	- 827

Maximum Web Forces Per Ply (lbs)

Webs	Tens.	Comp.	Webs	Tens.	Comp.
C -AA	1169	- 316	U - G	2743	- 789
AA- D	683	- 2141	G - S	998	- 3331
D - Z	739	- 2402	S - R	205	- 713
D - X	1319	- 365	R - H	172	- 558
Z - X	5407	- 1613	H - Q	611	- 130
X - E	2978	- 847	P - O	114	- 436
E - U	279	- 976	O - K	170	- 550
W - V	478	- 155	N - L	447	- 170
F - U	237	- 544	M - L	178	- 445

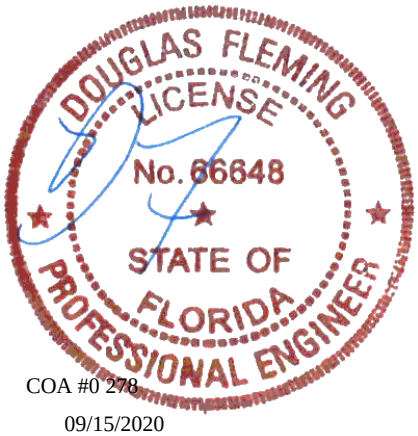

COA #0 278

09/15/2020

****WARNING**** READ AND FOLLOW ALL NOTES ON THIS DRAWING!
****IMPORTANT**** FURNISH THIS DRAWING TO ALL CONTRACTORS INCLUDING THE INSTALLERS

Trusses require extreme care in fabricating, handling, shipping, installing and bracing. Refer to and follow the latest edition of BCSI (Building Component Safety Information, by TPI and SBCA) for safety practices prior to performing these functions. Installers shall provide temporary bracing per BCSI. Unless noted otherwise, top chord shall have properly attached structural sheathing and bottom chord shall have a properly attached rigid ceiling. Locations shown for permanent lateral restraint of webs shall have bracing installed per BCSI sections B3, B7, or B10, as applicable. Apply plates to each face of truss and position as shown above and on the Joint Details, unless noted otherwise. Refer to drawings 160A-Z for standard plate positions. Refer to job's General Notes page for additional information.

Alpine, a division of ITW Building Components Group Inc. shall not be responsible for any deviation from this drawing, any failure to build the truss in conformance with ANSI/TPI 1, or for handling, shipping, installation and bracing of trusses. A seal on this drawing or cover page listing this drawing, indicates acceptance of professional engineering responsibility solely for the design shown. The suitability and use of this drawing for any structure is the responsibility of the Building Designer per ANSI/TPI 1 Sec.2.

For more information see these web sites: Alpine: www.alpineitw.com; TPI: www.tpinst.org; SBCA: www.sbcindustry.com; ICC: www.iccsafe.org

ALPINE AN ITW COMPANY
6750 Forum Drive
Suite 305
Orlando FL, 32821

Purlins

In lieu of structural panels or rigid ceiling use purlins to laterally brace chords as follows:

Chord	Spacing(in oc)	Start(ft)	End(ft)
TC	34	-2.07	3.96
TC	24	3.96	8.54
TC	22	8.54	12.54
TC	24	12.54	22.79
TC	75	22.79	32.00
TC	75	32.00	41.21
TC	24	41.21	47.58
BC	75	0.15	13.62
BC	68	12.47	26.71
BC	63	26.86	31.97
BC	65	31.97	37.23
BC	120	37.29	47.58

Apply purlins to any chords above or below fillers at 24" OC unless shown otherwise above.

Hangers / Ties

Simpson Construction Hardware is specified based on the most current information provided by Simpson Strong-Tie. Please refer to the most recent Simpson Strong-Tie catalog for additional information.

Recommended hanger connections are based on manufacturer tested capacities and calculations. Conditions may exist that require different connections than indicated. Refer to manufacturer publication for additional information.

Bearing at location x=47'4" uses the following support conditions: 47'4"
Bearing M (47'4", 10'1"2) LUS26
Supporting Member: (3)2x8 SP SS Dense
(4) 0.148"x3" nails into supporting member,
(3) 0.148"x3" nails into supported member.

DOUGLAS FLEMING
LICENSE
No. 66648
STATE OF
FLORIDA
PROFESSIONAL ENGINEER

COA #0 278

09/15/2020

****WARNING**** READ AND FOLLOW ALL NOTES ON THIS DRAWING!
****IMPORTANT**** FURNISH THIS DRAWING TO ALL CONTRACTORS INCLUDING THE INSTALLERS

Trusses require extreme care in fabricating, handling, shipping, installing and bracing. Refer to and follow the latest edition of BCSI (Building Component Safety Information, by TPI and SBCA) for safety practices prior to performing these functions. Installers shall provide temporary bracing per BCSI. Unless noted otherwise, top chord shall have properly attached structural sheathing and bottom chord shall have a properly attached rigid ceiling. Locations shown for permanent lateral restraint of webs shall have bracing installed per BCSI sections B3, B7, or B10, as applicable. Apply plates to each face of truss and position as shown above and on the Joint Details, unless noted otherwise. Refer to drawings 160A-Z for standard plate positions. Refer to job's General Notes page for additional information.

Alpine, a division of ITW Building Components Group Inc. shall not be responsible for any deviation from this drawing, any failure to build the truss in conformance with ANSI/TPI 1, or for handling, shipping, installation and bracing of trusses. A seal on this drawing or cover page listing this drawing, indicates acceptance of professional engineering responsibility solely for the design shown. The suitability and use of this drawing for any structure is the responsibility of the Building Designer per ANSI/TPI 1 Sec.2.

For more information see these web sites: Alpine: www.alpineitw.com; TPI: www.tpinst.org; SBCA: www.sbcindustry.com; ICC: www.iccsafe.org

ALPINE AN ITW COMPANY
6750 Forum Drive
Suite 305
Orlando FL, 32821

SEQN: 65929 JACK FROM: RNB	Ply: 1 Qty: 10	**Job Number:** b51385aa -terrell floor plan Trademark Const Group **Truss Label:** CJ4	Cust: R 857 JRef:1WYP8570001 T15 DrwNo: 259.20.0954.17833 SSB / DF 09/15/2020

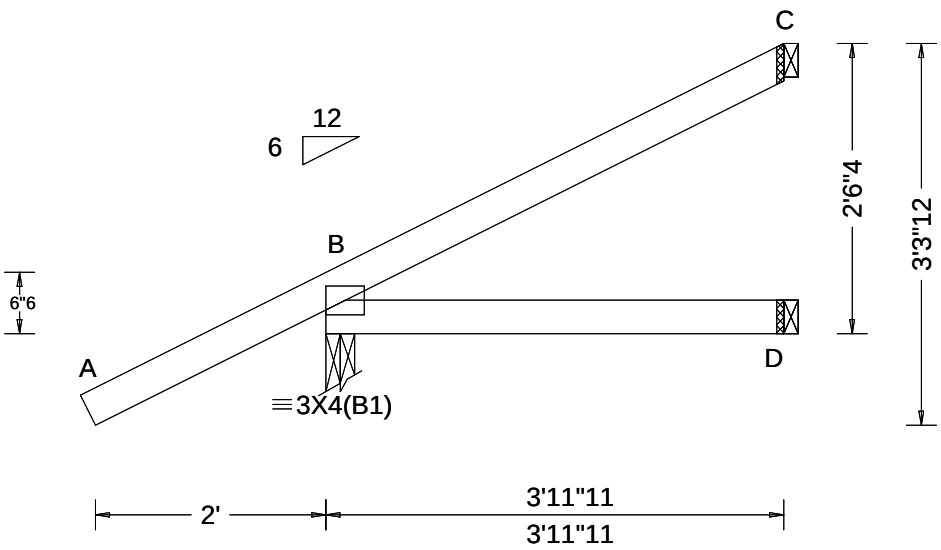

Loading Criteria (psf)
TCLL: 20.00
TCDL: 7.00
BCLL: 0.00
BCDL: 10.00
Des Ld: 37.00
NCBCLL: 10.00
Soffit: 2.00
Load Duration: 1.25
Spacing: 24.0 "

Wind Criteria
Wind Std: ASCE 7-10
Speed: 130 mph
Enclosure: Closed
Risk Category: II
EXP: B Kzt: NA
Mean Height: 15.00 ft
TCDL: 0.0 psf
BCDL: 0.0 psf
MWFRS Parallel Dist: 0 to h/2
C&C Dist a: 3.00 ft
Loc. from endwall: Any
GCpi: 0.18
Wind Duration: 1.60

Snow Criteria (Pg,Pf in PSF)
Pg: NA Ct: NA CAT: NA
Pf: NA Ce: NA
Lu: NA Cs: NA
Snow Duration: NA

Building Code:
FBC 2017 RES
TPI Std: 2014
Rep Fac: Yes
FT/RT:20(0)/0(0)
Plate Type(s):
WAVE

Defl/CSI Criteria
PP Deflection in loc L/defl L/#
VERT(LL): NA
VERT(CL): NA
HORZ(LL): 0.002 D - -
HORZ(TL): 0.002 D - -
Creep Factor: 2.0
Max TC CSI: 0.410
Max BC CSI: 0.116
Max Web CSI: 0.000

VIEW Ver: 18.02.01A.0205.19

▲Maximum Reactions (lbs)

	Gravity			Non-Gravity		
Loc	R+	/ R-	/ Rh	/ Rw	/ U	/ RL
B	313	/-	/-	/187	/88	/68
D	72	/-	/-	/37	/4	/-
C	78	/-	/-	/34	/46	/-

Wind reactions based on MWFRS
B Brg Width = 3.0 Min Req = 1.5
D Brg Width = 1.5 Min Req = -
C Brg Width = 1.5 Min Req = -
Bearing B Fcperp = 425psi.
Members not listed have forces less than 375#

Lumber
Top chord: 2x4 SP #1;
Bot chord: 2x4 SP #1;

Plating Notes
Plates sized for a minimum of 3.50 sq.in./piece.

Purlins
In lieu of structural panels or rigid ceiling use purlins to laterally brace chords as follows:

Chord	Spacing(in oc)	Start(ft)	End(ft)
TC	75	-2.07	3.97
BC	46	0.17	3.97

Apply purlins to any chords above or below fillers at 24" OC unless shown otherwise above.

Wind
Wind loads based on MWFRS with additional C&C member design.

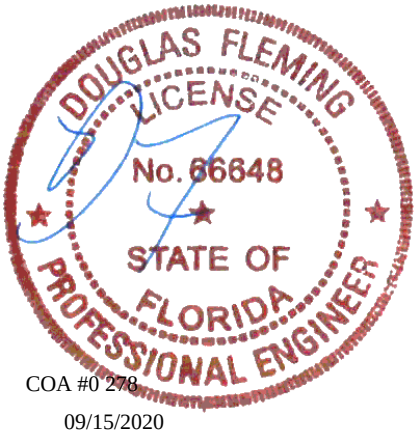

COA #0 278

09/15/2020

****WARNING**** READ AND FOLLOW ALL NOTES ON THIS DRAWING!
****IMPORTANT**** FURNISH THIS DRAWING TO ALL CONTRACTORS INCLUDING THE INSTALLERS

Trusses require extreme care in fabricating, handling, shipping, installing and bracing. Refer to and follow the latest edition of BCSI (Building Component Safety Information, by TPI and SBCA) for safety practices prior to performing these functions. Installers shall provide temporary bracing per BCSI. Unless noted otherwise, top chord shall have properly attached structural sheathing and bottom chord shall have a properly attached rigid ceiling. Locations shown for permanent lateral restraint of webs shall have bracing installed per BCSI sections B3, B7, or B10, as applicable. Apply plates to each face of truss and position as shown above and on the Joint Details, unless noted otherwise. Refer to drawings 160A-Z for standard plate positions. Refer to job's General Notes page for additional information.

Alpine, a division of ITW Building Components Group Inc. shall not be responsible for any deviation from this drawing, any failure to build the truss in conformance with ANSI/TPI 1, or for handling, shipping, installation and bracing of trusses. A seal on this drawing or cover page listing this drawing, indicates acceptance of professional engineering responsibility solely for the design shown. The suitability and use of this drawing for any structure is the responsibility of the Building Designer per ANSI/TPI 1 Sec.2.

For more information see these web sites: Alpine: www.alpineitw.com; TPI: www.tpinst.org; SBCA: www.sbcindustry.com; ICC: www.iccsafe.org

ALPINE AN ITW COMPANY
6750 Forum Drive
Suite 305
Orlando FL, 32821

Piggyback Detail - ASCE 7-16: 160 mph, 30' Mean Height, Enclosed, Exposure C, Kzt=1.00

160 mph Wind, 30.00 ft Mean Hgt, ASCE 7-16, Enclosed Bldg. located anywhere in roof, Exp C, Wind DL= 5.0 psf (min), Kzt=1.0.
Or 140 mph wind, 30.00 ft Mean Hgt, ASCE 7-16, Enclosed Bldg. located anywhere in roof, Exp D, wind DL= 5.0 psf (min), Kzt=1.0.

Note: Top chords of trusses supporting piggyback cap trusses must be adequately braced by sheathing or purlins. The building Engineer of Record shall provide diagonal bracing or any other suitable anchorage to permanently restrain purlins, and lateral bracing for out of plane loads over gable ends.

Maximum truss spacing is 24" o.c. detail is not applicable if cap supports additional loads such as cupola, steeple, chimney or drag strut loads.

** Refer to Engineer's sealed truss design drawing for piggyback and base truss specifications.

Detail A : Purlin Spacing = 24" o.c. or less

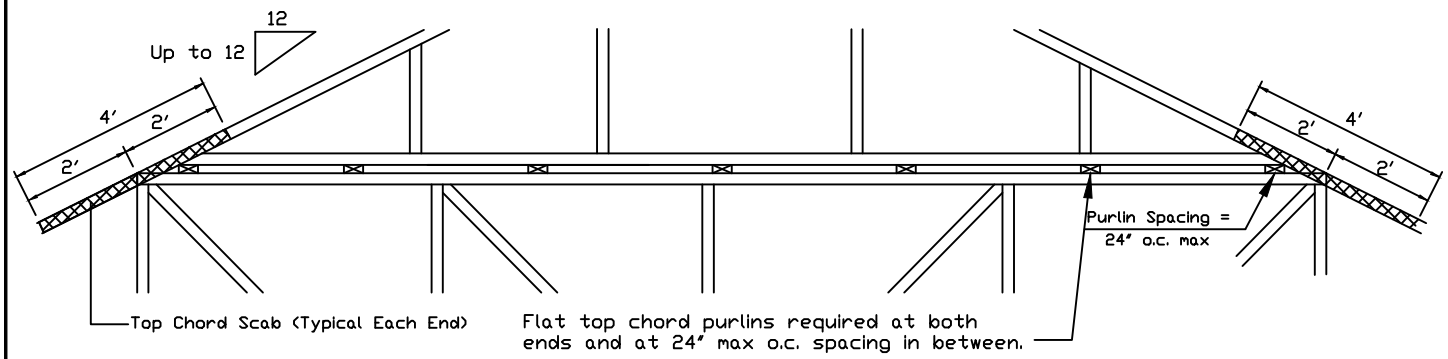

Piggyback cap truss slant nailed to all top chord purlin bracing with (2) 16d box nails (0.135"x3.5") and secure top chord with 2x4 #3 grade scab (1 side only at each end) attached with 2 rows of 10d box nails (0.128"x3") at 4" o.c.

Attach purlin bracing to the flat top chord using (2) 16d box nails (0.135"x3.5").

The top chord #3 grade 2x4 scab may be replaced with either of the following: (1) 3X8 Trulox plate attached with (8) 0.120"x1.375" nails, (4) into cap TC & (4) into base truss TC or (1) 28PB wave piggyback plate plated to the piggyback truss TC and attached to the base truss TC with (4) 0.120"x1.375" nails. Note: Nailing thru holes of wave plate is acceptable.

Detail B : Purlin Spacing > 24" o.c.

Piggyback cap truss slant nailed to all top chord purlin bracing with (2) 16d box nails (0.135"x3.5") and secure top chord with 2x4 #3 grade scab (1 side only at each end) attached with 2 rows of 10d box nails (0.128"x3") at 4" o.c.

Attach purlin bracing to the flat top chord using a minimum of (2) 16d box nails (0.135"x3.5").

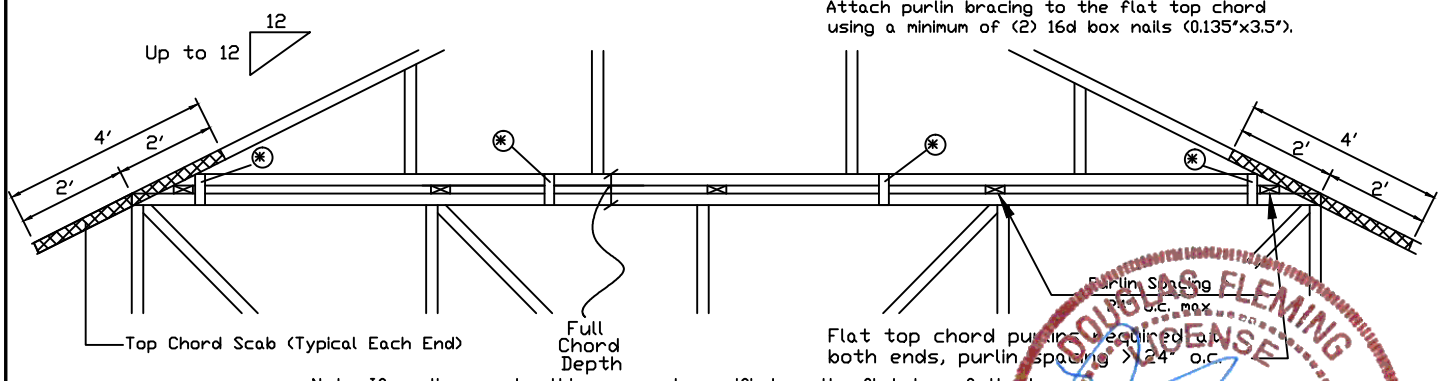

Note: If purlins or sheathing are not specified on the flat top of the base truss, purlins must be installed at 24" o.c. max. and use Detail A

* In addition, provide connection with one of the following methods:

Trulox
Use 3X8 Trulox plates for 2x4 chord member, and 3X10 Trulox plates for 2x6 and larger chord members. Attach to each face @ 8' o.c. with (4) 0.120"x1.375" nails into cap bottom chord and (4) in base truss top chord. Trulox plates may be staggered 4' o.c. front to back faces.

APA Rated Gusset
8"x8"x7/16" (min) APA rated sheathing gussets (each face). Attach @ 8' o.c. with (8) 6d common (0.113"x2") nails per gusset, (4) in cap bottom chord and (4) in base truss top chord. Gussets may be staggered 4' o.c. front to back faces.

2x4 Vertical Scabs
2x4 SPF #2, full chord depth scabs (each face). Attach @ 8' o.c. with (6) 10d box nails (0.128"x3") per scab, (3) in cap bottom chord and (3) in base truss top chord. Scabs may be staggered 4' o.c. front to back faces.

28PB Wave Piggyback Plate
One 28PB wave piggyback plate to each face @ 8' o.c. Attach teeth to piggyback at time of fabrication. Attach to supporting truss with (4) 0.120"x1.375" nails per face per ply. Piggyback plates may be staggered 4' o.c. front to back faces.

ALPINE™
AN ITW COMPANY

13723 Riverport Drive
Suite 200
Maryland Heights, MO 63043

WARNING READ AND FOLLOW ALL NOTES ON THIS DRAWING!
IMPORTANT FURNISH THIS DRAWING TO ALL CONTRACTORS INCLUDING THE INSTALLERS

Trusses require extreme care in fabricating, handling, shipping, installing and bracing. Refer to and follow the latest edition of BCSI (Building Component Safety Information, by TPI and SBCA) for safety practices prior to performing these functions. Installers shall provide temporary bracing per BCSI. Unless noted otherwise, top chord shall have properly attached structural sheathing and bottom chord shall have a properly attached rigid ceiling. Locations shown for permanent lateral restraint of webs shall have bracing installed per BCSI sections B3, B7 or B10, as applicable. Apply plates to each face of truss and position as shown above and on the Joint Details, unless noted otherwise. Refer to drawings 160A-Z for standard plate positions.

Alpine, a division of ITW Building Components Group Inc. shall not be responsible for any deviations from this drawing, any failure to build the truss in conformance with ANSI/TPI 1, or for handling, shipping, installation & bracing of trusses.

A seal on this drawing or cover page listing this drawing, indicates acceptance of professional engineering responsibility solely for the design shown. The suitability and use of this drawing for any structure is the responsibility of the Building Designer per ANSI/TPI 1 Sec.2.

For more information see this job's general notes page and these web sites:
ALPINE: www.alpineitw.com; TPI: www.tpinst.org; SBCA: www.sbcindustry.org; ICC: www.iccsafe.org

DOUGLAS FLEMING
LICENSE
No. 66648
STATE OF FLORIDA
PROFESSIONAL ENGINEER

09/15/2020
COA #0 278

REF	PIGGYBACK
DATE	01/02/2018
DRWG	PB160160118
SPACING	24.0"

Piggyback Detail - ASCE 7-16: 180 mph, 30' Mean Hgt, Partially Enclosed, Exp. C, Kzt=1.00

180 mph Wind, 30.00 ft Mean Hgt, ASCE 7-16, Part. Enclosed Bldg. located anywhere in roof, Exp C, Wind DL= 5.0 psf (min), Kzt=1.0.
Or 160 mph wind, 30.00 ft Mean Hgt, ASCE 7-16, Part. Enclosed Bldg. located anywhere in roof, Exp D, wind DL= 5.0 psf (min), Kzt=1.0.

Note: Top chords of trusses supporting piggyback cap trusses must be adequately braced by sheathing or purlins. The building Engineer of Record shall provide diagonal bracing or any other suitable anchorage to permanently restrain purlins, and lateral bracing for out of plane loads over gable ends.

Maximum truss spacing is 24" o.c. detail is not applicable if cap supports additional loads such as cupola, steeple, chimney or drag strut loads.

** Refer to Engineer's sealed truss design drawing for piggyback and base truss specifications.

Piggyback cap truss slant nailed to all top chord purlin bracing with (2) 16d box nails (0.135"x3.5") and secure top chord with 2x4 #3 grade scab (1 side only at each end) attached with 2 rows of 10d box nails (0.128"x3") at 4' o.c.

++ Flat top chord purlins required at both ends and at a maximum of 24" intervals unless otherwise noted on base truss design drawing. Attach purlin bracing to the flat top chord using a minimum of (2) 16d box nails (0.135"x3.5").

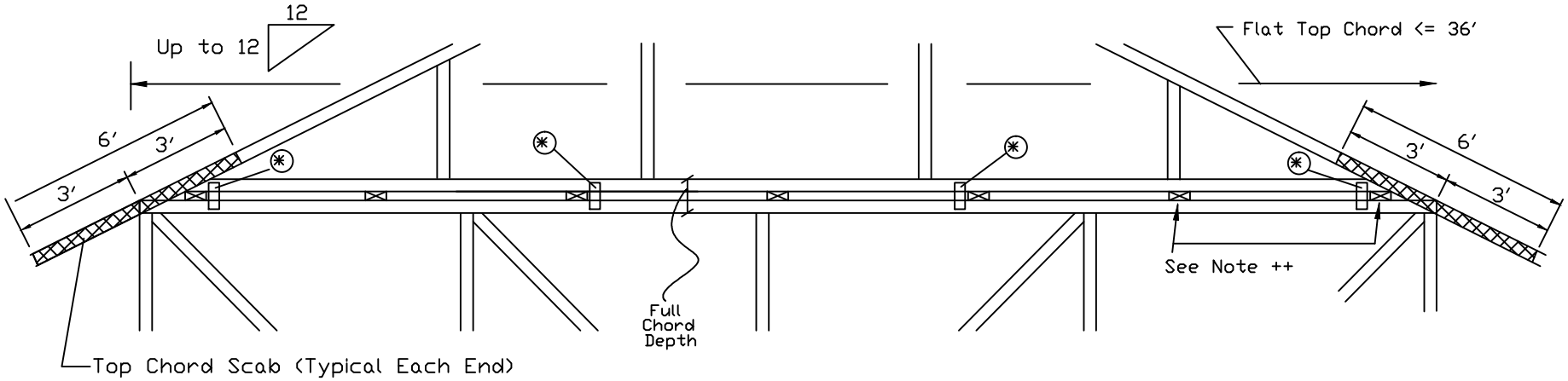

* In addition, provide connection with one of the following methods:	
Trulox Use 3X8 Trulox plates for 2x4 chord member, and 3X10 Trulox plates for 2x6 and larger chord members. Attach to each face @ 8' o.c. with (4) 0.120"x1.375" nails into cap bottom chord and (4) in base truss top chord. Trulox plates may be staggered 4' o.c. front to back faces.	28PB Wave Piggyback Plate One 28PB wave piggyback plate to each face @ 8' o.c. Attach teeth to piggyback at time of fabrication. Attach to supporting truss with (4) 0.120"x1.375" nails per face per ply. Piggyback plates may be staggered 4' o.c. front to back faces.
APA Rated Gusset 8"x8"x7/16" (min) APA rated sheathing gussets (each face). Attach @ 8' o.c. with (8) 6d common (0.113"x2") nails per gusset, (4) in cap bottom chord and (4) in base truss top chord. Gussets may be staggered 4' o.c. front to back faces.	2x4 Vertical Scabs 2x4 SPF #2, full chord depth scabs (each face). Attach @ 8' o.c. with (6) 10d box nails (0.128"x3") per scab, (3) in cap bottom chord and (3) in base truss top chord. Scabs may be staggered 4' o.c. front to back faces.

DOUGLAS A. LEMING
LICENSE
No. 66648
STATE OF FLORIDA
PROFESSIONAL ENGINEER
09/15/2020
COA #0278

ALPINE
AN ITW COMPANY
514 Earth City Expressway
Suite 242
Earth City, MO 63045

WARNING READ AND FOLLOW ALL NOTES ON THIS DRAWING!
IMPORTANT FURNISH THIS DRAWING TO ALL CONTRACTORS INCLUDING THE INSTALLER!

Trusses require extreme care in fabricating, handling, shipping, installing and bracing. Refer to and follow the latest edition of BCSI (Building Component Safety Information, by TPI and SBCA) for safety practices prior to performing these functions. Installers shall provide temporary bracing per BCSI. Unless noted otherwise, top chord shall have properly attached structural sheathing and bottom chord shall have a properly attached rigid ceiling. Locations shown for permanent lateral restraint of webs shall have bracing installed per BCSI sections B3, B7 or B10, as applicable. Apply plates to each face of truss and position as shown above and on the Joint Details, unless noted otherwise. Refer to drawings 160A-Z for standard plate positions.

Alpine, a division of ITW Building Components Group Inc. shall not be responsible for any deviation from this drawing, any failure to build the truss in conformance with ANSI/TPI 1, or for handling, shipping, installation & bracing of trusses.

A seal on this drawing or cover page listing this drawing, indicates acceptance of professional engineering responsibility solely for the design shown. The suitability and use of this drawing for any structure is the responsibility of the Building Designer per ANSI/TPI 1 Sec.2.

For more information see this job's general notes page and these web sites:
ALPINE: www.alpineitw.com; TPI: www.tpinst.org; SBCA: www.sbcindustry.org; ICC: www.iccsafe.org

SPACING	24.0"
REF	PIGGYBACK
DATE	01/02/2018
DRWG	PB180160118

Cracked or Broken Member Repair Detail

This drawing specifies repairs for a truss with broken chord or web member.

This design is valid only for single ply trusses with 2x4 or 2x6 broken members. No more than one break per chord panel and no more than two breaks per truss are allowed. Contact the truss manufacturer for any repairs that do not comply with this detail.

(B) = Damaged area, 12″ max length of damaged section
(L) = Minimum nailing distance on each side of damaged area (B)
(S) = Two 2x4 or two 2x6 side members, same size, grade, and species as damaged member. Apply one scab per face. Minimum side member length(s) = (2)(L) + (B)

Scab member length (S) must be within the broken panel.

Nail into 2x4 members using two (2) rows at 4″ o.c., rows staggered.
Nail into 2x6 members using three (3) rows at 4″ o.c., rows staggered.

Nail using 10d box or gun nails (0.128″x3″, min) into each side member.

The maximum permitted lumber grade for use with this detail is limited to Visual grade #1 and MSR grade 1650f.

This repair detail may be used for broken connector plate at mid-panel splices.

This repair detail may not be used for damaged chord or web sections occurring within the connector plate area.

Broken chord may not support any tie-in loads.

Load Duration = 0%
Member forces may be increased for Duration of Load

Member	Size	L	Maximum Member Axial Force			
			SPF-C	HF	DF-L	SYP
Web Only	2x4	12″	620#	635#	730#	800#
Web Only	2x4	18″	975#	1055#	1295#	1415#
Web or Chord	2x4	24″	975#	1055#	1495#	1745#
Web or Chord	2x6		1465#	1585#	2245#	2620#
Web or Chord	2x4	30″	1910#	1960#	2315#	2555#
Web or Chord	2x6		2230#	2365#	3125#	3575#
Web or Chord	2x4	36″	2470#	2530#	2930#	3210#
Web or Chord	2x6		3535#	3635#	4295#	4745#
Web or Chord	2x4	42″	2975#	3045#	3505#	3835#
Web or Chord	2x6		4395#	4500#	5225#	5725#
Web or Chord	2x4	48″	3460#	3540#	4070#	4445#
Web or Chord	2x6		5165#	5280#	6095#	6660#

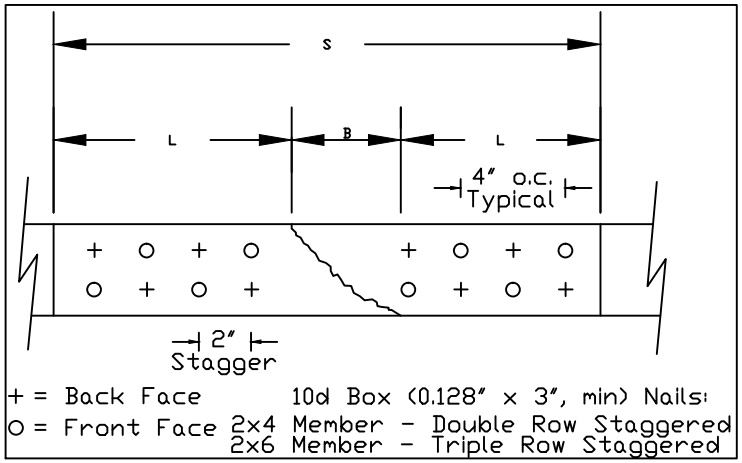

Nail Spacing Detail

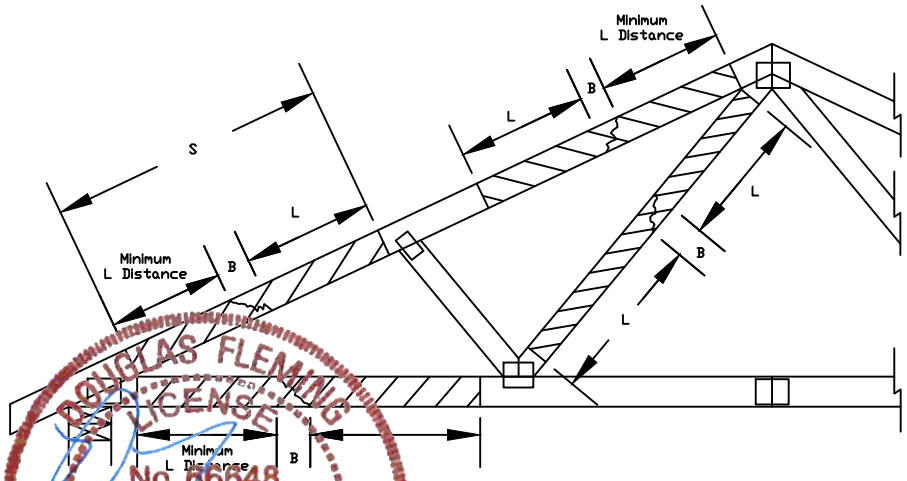

ALPINE
AN ITW COMPANY
514 Earth City Expressway
Suite 242
Earth City, MO 63045

****WARNING!** READ AND FOLLOW ALL NOTES ON THIS DRAWING!**
****IMPORTANT** FURNISH THIS DRAWING TO ALL CONTRACTORS INCLUDING THE INSTALLER!**

Trusses require extreme care in fabricating, handling, shipping, installing and bracing. Refer to and follow the latest edition of BCSI (Building Component Safety Information, by TPI and SBCA) for safety practices prior to performing these functions. Installers shall provide temporary bracing per BCSI. Unless noted otherwise, top chord shall have properly attached structural sheathing and bottom chord shall have a properly attached rigid ceiling. Locations shown for permanent lateral restraint of webs shall have bracing installed per BCSI sections B3, B7 or B10, as applicable. Apply plates to each face of truss and position as shown above and on the Joint Details, unless noted otherwise. Refer to drawings 160A-Z for standard plate positions.

Alpine, a division of ITW Building Components Group Inc. shall not be responsible for any deviations from this drawing, any failure to build the truss in conformance with ANSI/TPI 1, or for handling, shipping, installation & bracing of trusses.

A seal on this drawing or cover page listing this drawing, indicates acceptance of professional engineering responsibility solely for the design shown. The suitability and use of this drawing for any structure is the responsibility of the Building Designer per ANSI/TPI 1 Sec.2.

For more information see this job's general notes page and these web sites:
ALPINE: www.alpineitw.com; TPI: www.tpinst.org; SBCA: www.sbcindustry.org; ICC: www.iccsafe.org

DOUGLAS FLEMING
LICENSE
No. 66648
STATE OF FLORIDA
PROFESSIONAL ENGINEER
09/15/2020
COA # 0 278

SPACING 24.0″ MAX

REF	MEMBER REPAIR
DATE	10/01/14
DRWG	REPCHRD1014

Piggyback Detail - ASCE 7-10: 160 mph, 30' Mean Height, Enclosed, Exposure C, Kzt=1.00

160 mph Wind, 30.00 ft Mean Hgt, ASCE 7-10, Enclosed Bldg. located anywhere in roof, Exp C, Wind DL= 5.0 psf (min), Kzt=1.0.
Or 140 mph wind, 30.00 ft Mean Hgt, ASCE 7-10, Enclosed Bldg. located anywhere in roof, Exp D, wind DL= 5.0 psf (min), Kzt=1.0.

Note: Top chords of trusses supporting piggyback cap trusses must be adequately braced by sheathing or purlins. The building Engineer of Record shall provide diagonal bracing or any other suitable anchorage to permanently restrain purlins, and lateral bracing for out of plane loads over gable ends.

Maximum truss spacing is 24" o.c. detail is not applicable if cap supports additional loads such as cupola, steeple, chimney or drag strut loads.

** Refer to Engineer's sealed truss design drawing for piggyback and base truss specifications.

Detail A : Purlin Spacing = 24" o.c. or less

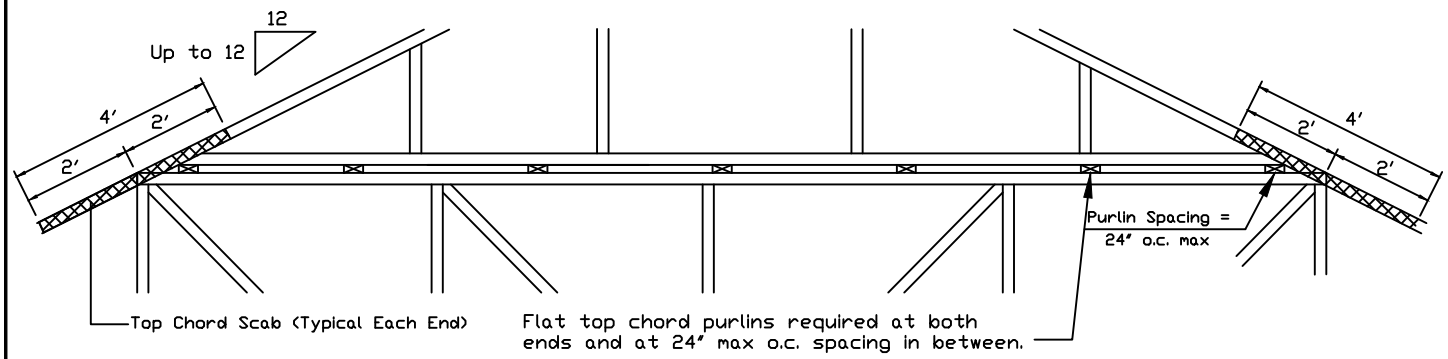

Piggyback cap truss slant nailed to all top chord purlin bracing with (2) 16d box nails (0.135"x3.5") and secure top chord with 2x4 #3 grade scab (1 side only at each end) attached with 2 rows of 10d box nails (0.128"x3") at 4" o.c.

Attach purlin bracing to the flat top chord using (2) 16d box nails (0.135"x3.5").

The top chord #3 grade 2x4 scab may be replaced with either of the following: (1) 3X8 Trulox plate attached with (8) 0.120"x1.375" nails, (4) into cap TC & (4) into base truss TC or (1) 28PB wave piggyback plate plated to the piggyback truss TC and attached to the base truss TC with (4) 0.120"x1.375" nails. Note: Nailing thru holes of wave plate is acceptable.

Detail B : Purlin Spacing > 24" o.c.

Piggyback cap truss slant nailed to all top chord purlin bracing with (2) 16d box nails (0.135"x3.5") and secure top chord with 2x4 #3 grade scab (1 side only at each end) attached with 2 rows of 10d box nails (0.128"x3") at 4" o.c.

Attach purlin bracing to the flat top chord using a minimum of (2) 16d box nails (0.135"x3.5").

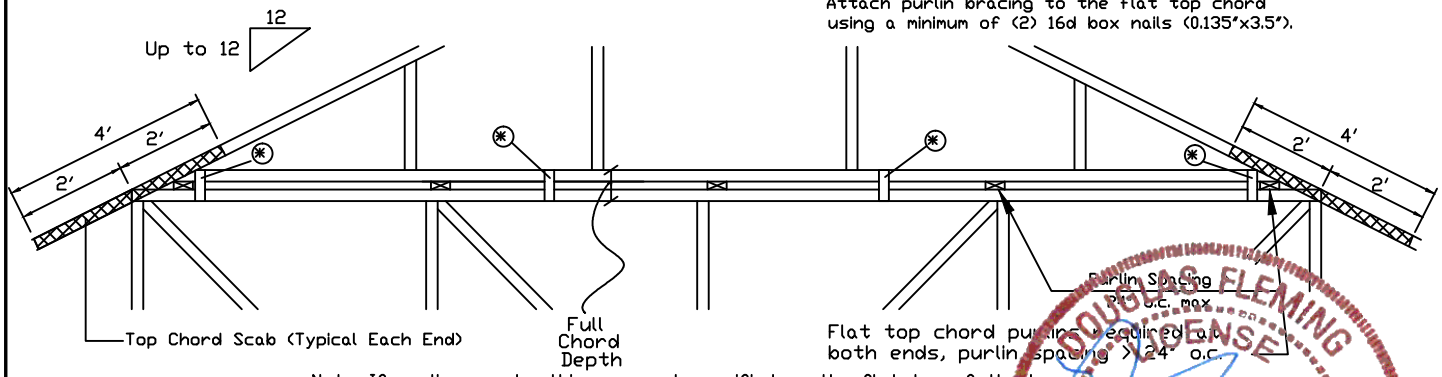

Note: If purlins or sheathing are not specified on the flat top of the base truss, purlins must be installed at 24" o.c. max. and use Detail A

* In addition, provide connection with one of the following methods:

Trulox
Use 3X8 Trulox plates for 2x4 chord member, and 3X10 Trulox plates for 2x6 and larger chord members. Attach to each face @ 8' o.c. with (4) 0.120"x1.375" nails into cap bottom chord and (4) in base truss top chord. Trulox plates may be staggered 4' o.c. front to back faces.

APA Rated Gusset
8"x8"x7/16" (min) APA rated sheathing gussets (each face). Attach @ 8' o.c. with (8) 6d common (0.113"x2") nails per gusset, (4) in cap bottom chord and (4) in base truss top chord. Gussets may be staggered 4' o.c. front to back faces.

2x4 Vertical Scabs
2x4 SPF #2, full chord depth scabs (each face). Attach @ 8' o.c. with (6) 10d box nails (0.128"x3") per scab, (3) in cap bottom chord and (3) in base truss top chord. Scabs may be staggered 4' o.c. front to back faces.

28PB Wave Piggyback Plate
One 28PB wave piggyback plate to each face @ 8' o.c. Attach teeth to piggyback at time of fabrication. Attach to supporting truss with (4) 0.120"x1.375" nails per face per ply. Piggyback plates may be staggered 4' o.c. front to back faces.

ALPINE
AN ITW COMPANY
514 Earth City Expressway
Suite 242
Earth City, MO 63045

WARNING READ AND FOLLOW ALL NOTES ON THIS DRAWING!
IMPORTANT FURNISH THIS DRAWING TO ALL CONTRACTORS INCLUDING THE INSTALLERS

Trusses require extreme care in fabricating, handling, shipping, installing and bracing. Refer to and follow the latest edition of BCSI (Building Component Safety Information, by TPI and SBCA) for safety practices prior to performing these functions. Installers shall provide temporary bracing per BCSI. Unless noted otherwise, top chord shall have properly attached structural sheathing and bottom chord shall have a properly attached rigid ceiling. Locations shown for permanent lateral restraint of webs shall have bracing installed per BCSI sections B3, B7 or B10, as applicable. Apply plates to each face of truss and position as shown above and on the Joint Details, unless noted otherwise. Refer to drawings 160A-Z for standard plate positions.

Alpine, a division of ITW Building Components Group Inc. shall not be responsible for any deviation from this drawing, any failure to build the truss in conformance with ANSI/TPI 1, or for handling, shipping, installation & bracing of trusses.

A seal on this drawing or cover page listing this drawing, indicates acceptance of professional engineering responsibility solely for the design shown. The suitability and use of this drawing for any structure is the responsibility of the Building Designer per ANSI/TPI 1 Sec.2.

For more information see this job's general notes page and these web sites:
ALPINE: www.alpineitw.com; TPI: www.tpinst.org; SBCA: www.sbcindustry.org; ICC: www.iccsafe.org

DOUGLAS FLEMING
LICENSE
No. 66648
STATE OF FLORIDA
PROFESSIONAL ENGINEER
09/15/2020
COA #0 278

REF	PIGGYBACK
DATE	10/01/14
DRWG	PB160101014
SPACING	24.0"

CLR Reinforcing Member Substitution

This detail is to be used when a Continuous Lateral Restraint (CLR) is specified on a truss design but an alternative web reinforcement method is desired.

Notes:

This detail is only applicable for changing the specified CLR shown on single ply sealed designs to T-reinforcement or L-reinforecement or scab reinforcement.

Alternative reinforcement specified in chart below may be conservative. For minimum alternative reinforcement, re-run design with appropriate reinforcement type.

Use scabs instead of L- or T- reinforcement on webs with intersecting truss joints, such as K-web joints, that may interfere with proper application along the narrow face of the web.

Web Member Size	Specified CLR Restraint	Alternative Reinforecement T- or L- Reinf.	Alternative Reinforecement Scab Reinf.
2x3 or 2x4	1 row	2x4	1-2x4
2x3 or 2x4	2 rows	2x6	2-2x4
2x6	1 row	2x4	1-2x6
2x6	2 rows	2x6	2-2x4(✱)
2x8	1 row	2x6	1-2x8
2x8	2 rows	2x6	2-2x6(✱)

T-reinforcement, L-reinforcement, or scab reinforcement to be same species and grade or better than web member unless specified otherwise on Engineer's sealed design.

(✱) Center scab on wide face of web. Apply (1) scab to each face of web.

T-Reinforcement or L-Reinforcement:

Apply to either side of web narrow face. Attach with 10d (0.128"x3.0",min) nails at 6" o.c. Reinforcing member is a minimum 80% of web member length.

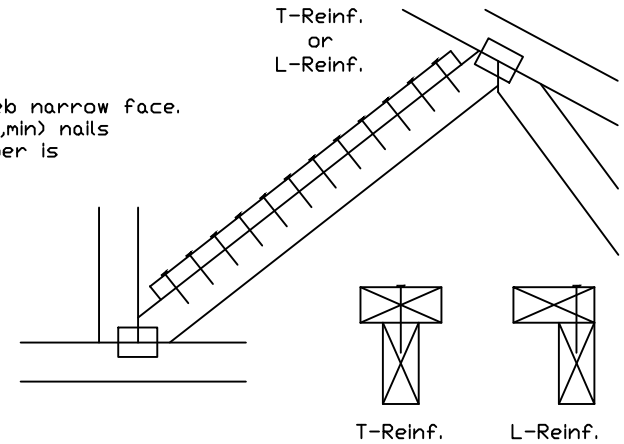

Scab Reinforcement:

Apply scab(s) to wide face of web. No more than (1) scab per face. Attach with 10d (0.128"x3.0",min) nails at 6" o.c. Reinforcing member is a minimum 80% of web member length.

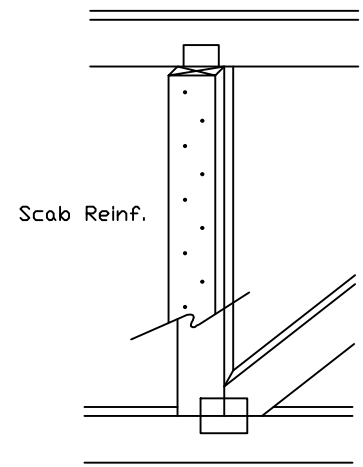

DOUGLAS FLEMING LICENSE No. 66648 STATE OF FLORIDA PROFESSIONAL ENGINEER

09/13/2020
COA #0278

ALPINE AN ITW COMPANY
514 Earth City Expressway
Suite 242
Earth City, MO 63045

WARNING READ AND FOLLOW ALL NOTES ON THIS DRAWING!
IMPORTANT FURNISH THIS DRAWING TO ALL CONTRACTORS INCLUDING THE INSTALLER!

Trusses require extreme care in fabricating, handling, shipping, installing and bracing. Refer to and follow the latest edition of BCSI (Building Component Safety Information, by TPI and SBCA) for safety practices prior to performing these functions. Installers shall provide temporary bracing per BCSI. Unless noted otherwise, top chord shall have properly attached structural sheathing and bottom chord shall have a properly attached rigid ceiling. Locations shown for permanent lateral restraint of webs shall have bracing installed per BCSI sections B3, B7 or B10, as applicable. Apply plates to each face of truss and position as shown above and on the Joint Details, unless noted otherwise. Refer to drawings 160A-Z for standard plate positions.

Alpine, a division of ITW Building Components Group Inc. shall not be responsible for any deviations from this drawing, any failure to build the truss in conformance with ANSI/TPI 1, or for handling, shipping, installation & bracing of trusses.

A seal on this drawing or cover page listing this drawing, indicates acceptance of professional engineering responsibility solely for the design shown. The suitability and use of this drawing for any structure is the responsibility of the Building Designer per ANSI/TPI 1 Sec.2.

For more information see this job's general notes page and these web sites:
ALPINE: www.alpineitw.com; TPI: www.tpinst.org; SBCA: www.sbcindustry.org; ICC: www.iccsafe.org

TC LL	PSF	
TC DL	PSF	
BC DL	PSF	
BC LL	PSF	
TOT. LD.	PSF	
DUR. FAC.		
SPACING		

REF	CLR Subst.
DATE	01/02/19
DRWG	BRCLBSUB0119

NAIL SPACING DETAIL

MINIMUM SPACING FOR SINGLE BLOCK IS SHOWN. DOUBLE NAIL SPACINGS AND STAGGER NAILING FOR TWO BLOCKS. GREATER SPACING MAY BE REQUIRED TO AVOID SPLITTING.

BLOCK LOCATION, SIZE, LENGTH,GRADE AND TOTAL NUMBER AND TYPE OF NAILS ARE TO BE SPECIFIED ON SEALED DESIGN REFERENCING THIS DETAIL.

LOAD PERPENDICULAR TO GRAIN
A - EDGE DISTANCE AND SPACING BETWEEN STAGGERED ROWS OF NAILS (6 NAIL DIAMETERS)
B - SPACING OF NAILS IN A ROW (12 NAIL DIAMETERS)
C - END DISTANCE (15 NAIL DIAMETERS)

LOAD PARALLEL TO GRAIN
A - EDGE DISTANCE (6 NAIL DIAMETERS)
C - SPACING OF NAILS IN A ROW AND END DISTANCE (15 NAIL DIAMETERS)
D - SPACING BETWEEN STAGGERED ROWS OF NAILS (7 1/2 NAIL DIAMETERS)

IF NAIL HOLES ARE PREBORED, SOME SPACING MAY BE REDUCED BY THE AMOUNTS GIVEN BELOW:
* SPACING MAY BE REDUCED BY 50%
** SPACING MAY BE REDUCED BY 33%

MINIMUM NAIL SPACING DISTANCES

NAIL TYPE	DISTANCES A	B*	C**	D
8d BOX (0.113"X 2.5",MIN)	3/4"	1 3/8"	1 3/4"	7/8"
10d BOX (0.128"X 3.",MIN)	7/8"	1 5/8"	2"	1"
12d BOX (0.128"X 3.25",MIN)	7/8"	1 5/8"	2"	1"
16d BOX (0.135"X 3.5",MIN)	7/8"	1 5/8"	2 1/8"	1 1/8"
20d BOX (0.148"X 4.",MIN)	1"	1 7/8"	2 1/4"	1 1/8"
8d COMMON (0.131"X 2.5",MIN)	7/8"	1 5/8"	2"	1"
10d COMMON (0.148"X 3.",MIN)	1"	1 7/8"	2 1/4"	1 1/8"
12d COMMON (0.148"X 3.25",MIN)	1"	1 7/8"	2 1/4"	1 1/8"
16d COMMON (0.162"X 3.5",MIN)	1'	2"	2 1/2"	1 1/4"
GUN (0.120"X 2.5",MIN)	3/4"	1 1/2"	1 7/8"	1"
GUN (0.131"X 2.5",MIN)	7/8"	1 5/8"	2"	1"
GUN (0.120"X 3.",MIN)	3/4"	1 1/2"	1 7/8"	1"
GUN (0.131"X 3.",MIN)	7/8"	1 5/8"	2"	1"

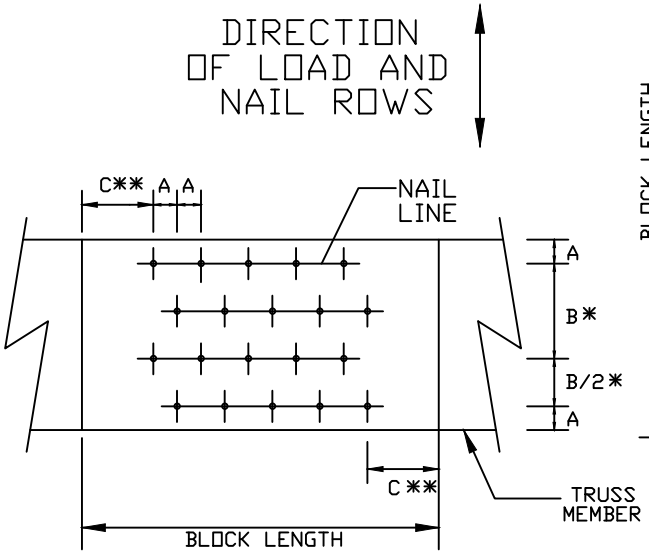

LOAD APPLIED PERPENDICULAR TO GRAIN

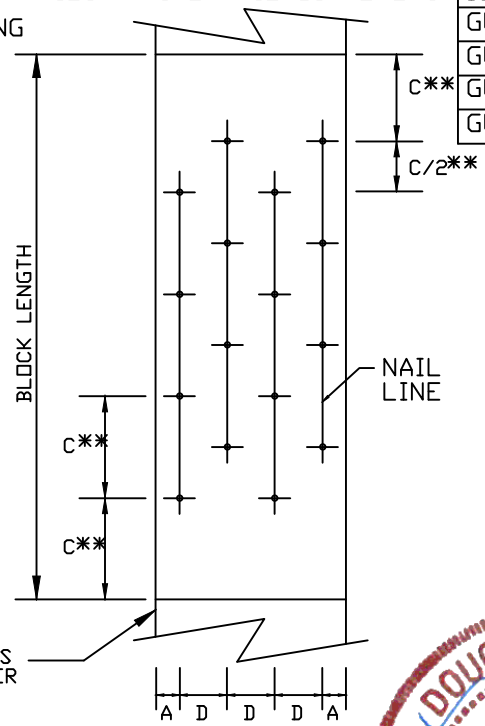

LOAD APPLIED PARALLEL TO GRAIN

DOUGLAS FLEMING LICENSE No. 66648 STATE OF FLORIDA PROFESSIONAL ENGINEER

09/15/2020

C-04-0 278

ALPINE AN ITW COMPANY
514 Earth City Expressway
Suite 242
Earth City, MO 63045

WARNING READ AND FOLLOW ALL NOTES ON THIS DRAWING!
IMPORTANT FURNISH THIS DRAWING TO ALL CONTRACTORS INCLUDING THE INSTALLERS

Trusses require extreme care in fabricating, handling, shipping, installing and bracing. Refer to and follow the latest edition of BCSI (Building Component Safety Information, by TPI and SBCA) for safety practices prior to performing these functions. Installers shall provide temporary bracing per BCSI. Unless noted otherwise, top chord shall have properly attached structural sheathing and bottom chord shall have a properly attached rigid ceiling. Locations shown for permanent lateral restraint of webs shall have bracing installed per BCSI sections B3, B7 or B10, as applicable. Apply plates to each face of truss and position as shown above and on the Joint Details, unless noted otherwise. Refer to drawings 160A-Z for standard plate positions.

Alpine, a division of ITW Building Components Group Inc. shall not be responsible for any deviations from this drawing, any failure to build the truss in conformance with ANSI/TPI 1, or for handling, shipping, installation & bracing of trusses.

A seal on this drawing or cover page listing this drawing, indicates acceptance of professional engineering responsibility solely for the design shown. The suitability and use of this drawing for any structure is the responsibility of the Building Designer per ANSI/TPI 1 Sec.2.

For more information see this job's general notes page and these web sites:
ALPINE: www.alpineitw.com; TPI: www.tpinst.org; SBCA: www.sbcindustry.org; ICC: www.iccsafe.org

REF	NAIL SPACE
DATE	10/01/14
DRWG	CNNAILSP1014

Gable Stud Reinforcement Detail

ASCE 7-10: 140 mph Wind Speed, 15' Mean Height, Enclosed, Exposure C, Kzt = 1.00

Or: 120 mph Wind Speed, 15' Mean Height, Partially Enclosed, Exposure C, Kzt = 1.00
Or: 120 mph Wind Speed, 15' Mean Height, Enclosed, Exposure D, Kzt = 1.00
Or: 100 mph Wind Speed, 15' Mean Height, Partially Enclosed, Exposure D, Kzt = 1.00

Max Gable Vertical Length	2x4 Gable Vertical Spacing	Species	Brace Grade	No Braces	(1) 1x4 'L' Brace * Group A	(1) 1x4 'L' Brace * Group B	(1) 2x4 'L' Brace * Group A	(1) 2x4 'L' Brace * Group B	(2) 2x4 'L' Brace ** Group A	(2) 2x4 'L' Brace ** Group B	(1) 2x6 'L' Brace * Group A	(1) 2x6 'L' Brace * Group B	(2) 2x6 'L' Brace ** Group A	(2) 2x6 'L' Brace ** Group B
	24" o.c.	SPF HF	#1 / #2	4' 3"	7' 3"	7' 7"	8' 7"	8' 11"	10' 3"	10' 8"	13' 6"	14' 0"	14' 0"	14' 0"
			#3	4' 1"	6' 7"	7' 1"	8' 6"	8' 10"	10' 1"	10' 6"	13' 4"	13' 10"	14' 0"	14' 0"
			Stud	4' 1"	6' 7"	7' 0"	8' 6"	8' 10"	10' 1"	10' 6"	13' 4"	13' 10"	14' 0"	14' 0"
			Standard	4' 1"	5' 8"	6' 0"	7' 7"	8' 1"	10' 1"	10' 6"	11' 10"	12' 8"	14' 0"	14' 0"
		SP DFL	#1	4' 6"	7' 4"	7' 8"	8' 8"	9' 0"	10' 4"	10' 9"	13' 8"	14' 0"	14' 0"	14' 0"
			#2	4' 3"	7' 3"	7' 7"	8' 7"	8' 11"	10' 3"	10' 8"	13' 6"	14' 0"	14' 0"	14' 0"
			#3	4' 2"	6' 0"	6' 4"	7' 11"	8' 6"	10' 2"	10' 7"	12' 5"	13' 4"	14' 0"	14' 0"
			Stud	4' 2"	6' 0"	6' 4"	7' 11"	8' 6"	10' 2"	10' 7"	12' 5"	13' 4"	14' 0"	14' 0"
			Standard	4' 0"	5' 3"	5' 7"	7' 0"	7' 6"	9' 6"	10' 2"	11' 0"	11' 10"	14' 0"	14' 0"
	16" o.c.	SPF HF	#1 / #2	4' 11"	8' 4"	8' 8"	9' 10"	10' 3"	11' 8"	12' 2"	14' 0"	14' 0"	14' 0"	14' 0"
			#3	4' 8"	8' 1"	8' 8"	9' 8"	10' 1"	11' 7"	12' 1"	14' 0"	14' 0"	14' 0"	14' 0"
			Stud	4' 8"	8' 1"	8' 6"	9' 8"	10' 1"	11' 7"	12' 1"	14' 0"	14' 0"	14' 0"	14' 0"
			Standard	4' 8"	6' 11"	7' 5"	9' 3"	9' 11"	11' 7"	12' 1"	14' 0"	14' 0"	14' 0"	14' 0"
		SP DFL	#1	5' 1"	8' 5"	8' 9"	9' 11"	10' 4"	11' 10"	12' 4"	14' 0"	14' 0"	14' 0"	14' 0"
			#2	4' 11"	8' 4"	8' 8"	9' 10"	10' 3"	11' 8"	12' 2"	14' 0"	14' 0"	14' 0"	14' 0"
			#3	4' 9"	7' 4"	7' 9"	9' 9"	10' 2"	11' 8"	12' 1"	14' 0"	14' 0"	14' 0"	14' 0"
			Stud	4' 9"	7' 4"	7' 9"	9' 9"	10' 2"	11' 8"	12' 1"	14' 0"	14' 0"	14' 0"	14' 0"
			Standard	4' 8"	6' 5"	6' 10"	8' 7"	9' 2"	11' 7"	12' 1"	13' 6"	14' 0"	14' 0"	14' 0"
	12" o.c.	SPF HF	#1 / #2	5' 5"	9' 2"	9' 6"	10' 10"	11' 3"	11' 8"	13' 5"	14' 0"	14' 0"	14' 0"	14' 0"
			#3	5' 1"	9' 0"	9' 4"	10' 8"	11' 1"	12' 9"	13' 3"	14' 0"	14' 0"	14' 0"	14' 0"
			Stud	5' 1"	9' 0"	9' 4"	10' 8"	11' 1"	12' 9"	13' 3"	14' 0"	14' 0"	14' 0"	14' 0"
			Standard	5' 1"	8' 0"	8' 6"	10' 8"	11' 1"	12' 9"	13' 3"	14' 0"	14' 0"	14' 0"	14' 0"
		SP DFL	#1	5' 8"	9' 3"	9' 8"	10' 11"	11' 4"	13' 0"	13' 6"	14' 0"	14' 0"	14' 0"	14' 0"
			#2	5' 5"	9' 2"	9' 6"	10' 10"	11' 3"	12' 11"	13' 5"	14' 0"	14' 0"	14' 0"	14' 0"
			#3	5' 3"	8' 5"	9' 0"	10' 9"	11' 2"	12' 10"	13' 4"	14' 0"	14' 0"	14' 0"	14' 0"
			Stud	5' 3"	8' 5"	9' 0"	10' 9"	11' 2"	12' 10"	13' 4"	14' 0"	14' 0"	14' 0"	14' 0"
			Standard	5' 1"	7' 5"	7' 11"	9' 11"	10' 7"	12' 9"	13' 3"	14' 0"	14' 0"	14' 0"	14' 0"

Bracing Group Species and Grades:

Group A:

Spruce-Pine-Fir

#1 / #2	Standard
#3	Stud

Hem-Fir

#2	Stud
#3	Standard

Douglas Fir-Larch

#3
Stud
Standard

Southern Pine***

#3
Stud
Standard

Group B:

Hem-Fir

#1 & Btr
#1

Douglas Fir-Larch

#1
#2

Southern Pine***

#1
#2

1x4 Braces shall be SRB (Stress-Rated Board).

***For 1x4 So. Pine use only Industrial 55 or Industrial 45 Stress-Rated Boards. Group B values may be used with these grades.

Gable Truss Detail Notes:

Wind Load deflection criterion is L/240.

Provide uplift connections for 55 plf over continuous bearing (5 psf TC Dead Load).

Gable end supports load from 4' 0" outlookers with 2' 0" overhang, or 12" plywood overhang.

Attach 'L' braces with 10d (0.128"x3.0" min) nails.

* For (1) 'L' brace: space nails at 2" o.c. in 18" end zones and 4" o.c. between zones.

** For (2) 'L' braces: space nails at 3" o.c. in 18" end zones and 6" o.c. between zones.

'L' bracing must be a minimum of 80% of web member length.

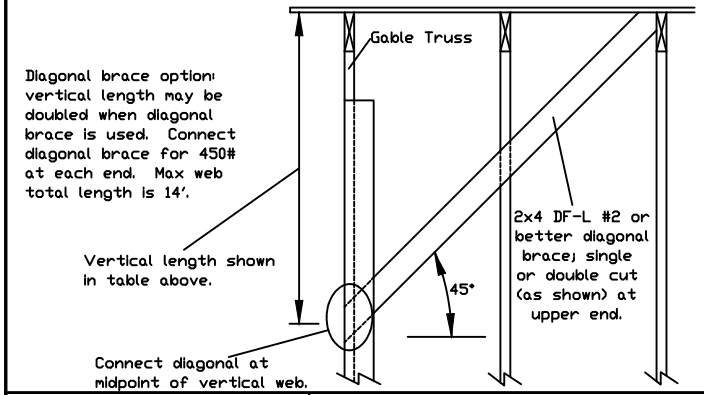

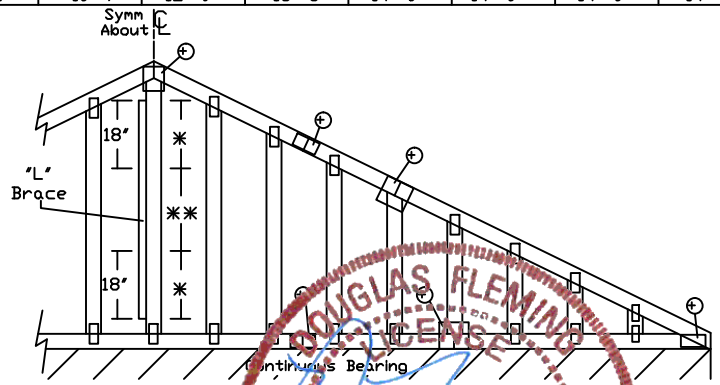

Refer to chart above for max gable vertical length.

Gable Vertical Plate Sizes

Vertical Length	No Splice
Less than 4' 0"	1X4 or 2X3
Greater than 4' 0"	3X4

+ Refer to common truss design for peak, splice, and heel plates.

Refer to the Building Designer for conditions not addressed by this detail.

DOUGLAS FLEMING LICENSED No. 66548 STATE OF FLORIDA PROFESSIONAL ENGINEER

09/15/2020
COA #0278

ALPINE AN ITW COMPANY
514 Earth City Expressway
Suite 242
Earth City, MO 63045

WARNING! READ AND FOLLOW ALL NOTES ON THIS DRAWING!
IMPORTANT! FURNISH THIS DRAWING TO ALL CONTRACTORS INCLUDING THE INSTALLERS

Trusses require extreme care in fabricating, handling, shipping, installing and bracing. Refer to and follow the latest edition of BCSI (Building Component Safety Information, by TPI and SBCA) for safety practices prior to performing these functions. Installers shall provide temporary bracing per BCSI. Unless noted otherwise, top chord shall have properly attached structural sheathing and bottom chord shall have a properly attached rigid ceiling. Locations shown for permanent lateral restraint of webs shall have bracing installed per BCSI sections B3, B7 or B10, as applicable. Apply plates to each face of truss and position as shown above and on the Joint Details, unless noted otherwise. Refer to drawings 160A-Z for standard plate positions.

Alpine, a division of ITW Building Components Group Inc. shall not be responsible for any deviations from this drawing, any failure to build the truss in conformance with ANSI/TPI 1, or for handling, shipping, installation & bracing of trusses.

A seal on this drawing or cover page listing this drawing, indicates acceptance of professional engineering responsibility solely for the design shown. The suitability and use of this drawing for any structure is the responsibility of the Building Designer per ANSI/TPI 1 Sec.2.

For more information see this job's general notes page and these web sites:
ALPINE: www.alpineitw.com; TPI: www.tpinst.org; SBCA: www.sbcindustry.org; ICC: www.iccsafe.org

MAX. TOT. LD. 60 PSF

MAX. SPACING 24.0"

REF	ASCE7-10-GAB14015
DATE	10/01/14
DRWG	A14015ENC101014

Gable Detail

For Let-in Verticals

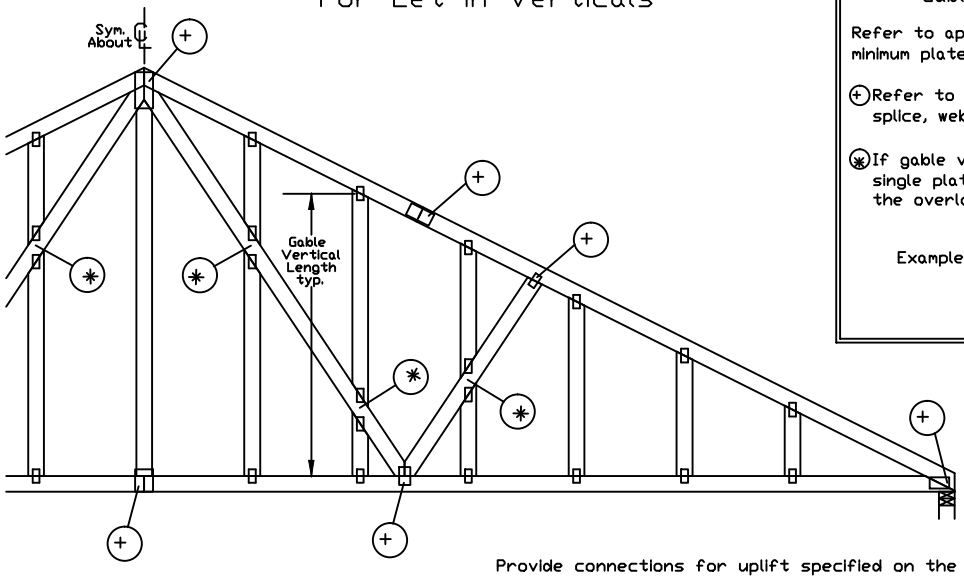

Gable Truss Plate Sizes

Refer to appropriate Alpine gable detail for minimum plate sizes for vertical studs.

(+) Refer to Engineered truss design for peak, splice, web, and heel plates.

(✱) If gable vertical plates overlap, use a single plate that covers the total area of the overlapped plates to span the web.

Example:

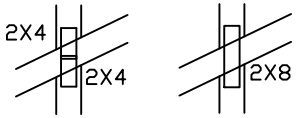

"T" Reinforcement Attachment Detail

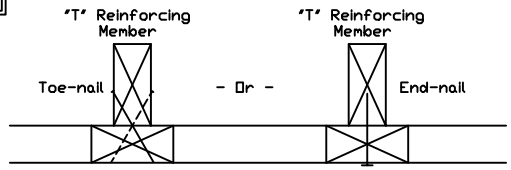

Provide connections for uplift specified on the engineered truss design.

Attach each "T" reinforcing member with

End Driven Nails:
10d Common (0.148"x 3.",min) Nails at 4" o.c. plus
(4) nails in the top and bottom chords.

Toenailed Nails:
10d Common (0.148"x3",min) Toenails at 4" o.c. plus
(4) toenails in the top and bottom chords.

This detail to be used with the appropriate Alpine gable detail for ASCE wind load.

ASCE 7-05 Gable Detail Drawings
A13015051014, A12015051014, A11015051014, A10015051014, A14015051014,
A13030051014, A12030051014, A11030051014, A10030051014, A14030051014

ASCE 7-10 & ASCE 7-16 Gable Detail Drawings
A11515ENC100118, A12015ENC100118, A14015ENC100118, A16015ENC100118,
A18015ENC100118, A20015ENC100118, A20015END100118, A20015PED100118,
A11530ENC100118, A12030ENC100118, A14030ENC100118, A16030ENC100118,
A18030ENC100118, A20030ENC100118, A20030END100118, A20030PED100118,
S11515ENC100118, S12015ENC100118, S14015ENC100118, S16015ENC100118,
S18015ENC100118, S20015ENC100118, S20015END100118, S20015PED100118,
S11530ENC100118, S12030ENC100118, S14030ENC100118, S16030ENC100118,
S18030ENC100118, S20030ENC100118, S20030END100118, S20030PED100118

See appropriate Alpine gable detail for maximum unreinforced gable vertical length.

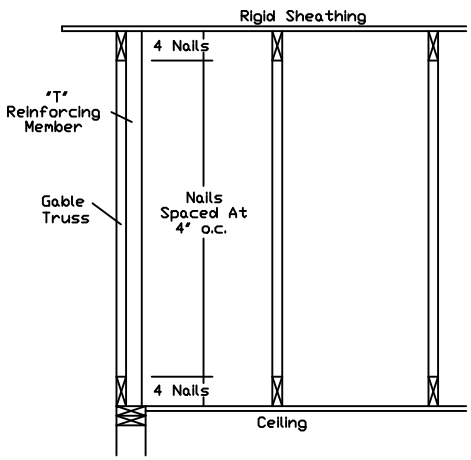

To convert from "L" to "T" reinforcing members, multiply "T" increase by length (based on appropriate Alpine gable detail).

Maximum allowable "T" reinforced gable vertical length is 14' from top to bottom chord.

"T" reinforcing member material must match size, specie, and grade of the "L" reinforcing member.

Web Length Increase w/ "T" Brace

"T" Reinf. Mbr. Size	"T" Increase
2x4	30 %
2x6	20 %

Example:
ASCE 7-10 Wind Speed = 120 mph
Mean Roof Height = 30 ft, Kzt = 1.00
Gable Vertical = 24"o.c. SP #3
"T" Reinforcing Member Size = 2x4
"T" Brace Increase (From Above) = 30% = 1.30
(1) 2x4 "L" Brace Length = 8' 7"
Maximum "T" Reinforced Gable Vertical Length
1.30 x 8' 7" = 11' 2"

ALPINE® AN ITW COMPANY
514 Earth City Expressway
Suite 242
Earth City, MO 63045

****WARNING** READ AND FOLLOW ALL NOTES ON THIS DRAWING!**
****IMPORTANT** FURNISH THIS DRAWING TO ALL CONTRACTORS INCLUDING THE INSTALLER!**

Trusses require extreme care in fabricating, handling, shipping, installing and bracing. Refer to and follow the latest edition of BCSI (Building Component Safety Information, by TPI and SBCA) for safety practices prior to performing these functions. Installers shall provide temporary bracing per BCSI. Unless noted otherwise, top chord shall have properly attached structural sheathing and bottom chord shall have a properly attached rigid ceiling. Locations shown for permanent lateral restraint of webs shall have bracing installed per BCSI sections B3, B7 or B10, as applicable. Apply plates to each face of truss and position as shown above and on the Joint Details, unless noted otherwise. Refer to drawings 160A-Z for standard plate positions.

Alpine, a division of ITW Building Components Group Inc. shall not be responsible for any deviation from this drawing, any failure to build the truss in conformance with ANSI/TPI 1, or for handling, shipping, installation & bracing of trusses.

A seal on this drawing or cover page listing this drawing, indicates acceptance of professional engineering responsibility solely for the design shown. The suitability and use of this drawing for any structure is the responsibility of the Building Designer per ANSI/TPI 1 Sec.2.

For more information see this job's general notes page and these web sites:
ALPINE: www.alpineitw.com; TPI: www.tpinst.org; SBCA: www.sbcindustry.org; ICC: www.iccsafe.org

DOUGLAS L. DEMING LICENSED No. 66648 STATE OF FLORIDA PROFESSIONAL ENGINEER

09/15/2020
COA #0 278

MAX. TOT. LD. 60 PSF
DUR. FAC. ANY
MAX. SPACING 24.0"

REF	LET-IN VERT
DATE	01/02/2018
DRWG	GBLLETIN0118

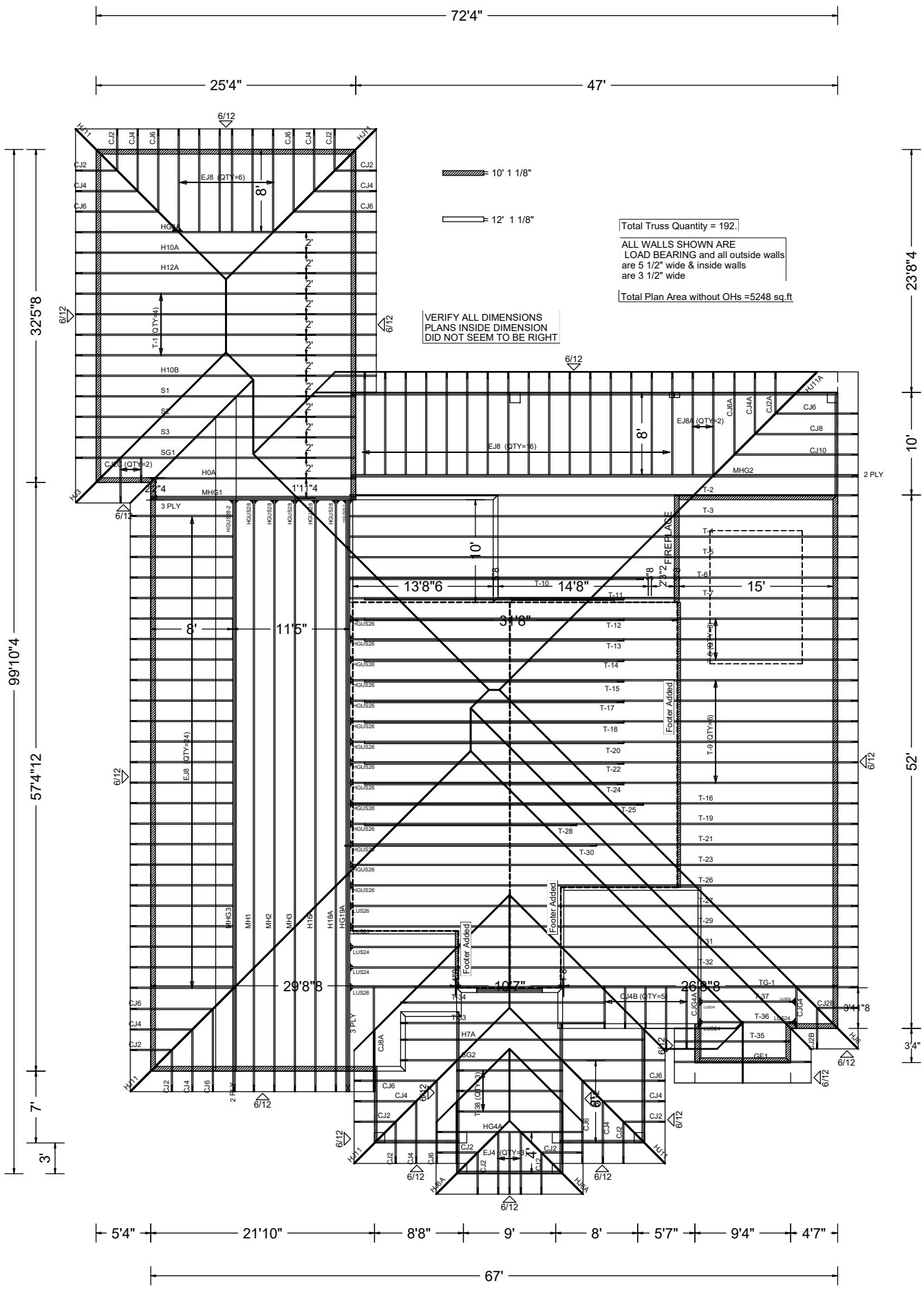

SEMINOLE TRUSSES INC.

Job Name: terrell floor plan
Customer: Trademark Const Group
Designer: Rodney Barone
PlanName:
Created : 07-23-2020
SemRef# : b51385aa

JOB NO:
b51385aa

PAGE NO:
1 OF 1