This document has been electronically signed and sealed using a Digital Signature. Printed copies without an original signature must be verified using the original electronic version.

DOUGLAS FLEMING
LICENSE
No. 66648
STATE OF FLORIDA
PROFESSIONAL ENGINEER

Columbia County Building Department
Reviewed for
File Copy
Code Compliance
Plans Examiner

73

ALPINE
AN ITW COMPANY

COA #0 278
Florida Certificate of Product Approval #FL1999

09/04/2024

Alpine, an ITW Company
155 Harlem Ave
North Building, 4th Floor
Glenview, IL 60025
Phone: (800)755-6001
www.alpineitw.com

This item has been digitally signed by Douglas Fleming on the date adjacent to the seal.

Printed copies of this document are not considered signed and sealed and the signature must be verified on any electronic copies.

Site Information:	Page 1:
Customer: Seminole Trusses, Inc.	*Job Number:* B59525R
Job Description: Perri Residence	
Address: 119 SW Hawk Lane, FORT WHITE, FL 32038	

Job Engineering Criteria:	
Design Code: FBC 8th Ed. 2023 Res.	*IntelliVIEW Version:* 23.02.01A *JRef #:* 1Y2Y8570005
Wind Standard: ASCE 7-22 *Wind Speed (mph):* 130 *Building Type:* Closed	*Design Loading (psf):* 37.00

This package contains general notes pages, 54 truss drawing(s) and 4 detail(s).

Item	Drawing Number	Truss	Item	Drawing Number	Truss
1	247.24.1013.59582	CJ1	2	247.24.1013.59363	CJ2
3	247.24.1014.00224	CJ3	4	247.24.1013.59285	CJ9
5	247.24.1014.00629	CJ10	6	247.24.1013.59738	CJ11
7	247.24.1013.58145	CJ12	8	247.24.1014.00254	CJ13
9	247.24.1013.59708	CJ14	10	247.24.1013.58146	CJ15
11	247.24.1013.59348	CJ16	12	247.24.1014.00411	CJ17
13	247.24.1014.00691	CJ18	14	247.24.1014.00326	CJ19
15	247.24.1013.59067	CJ20	16	247.24.1014.00488	EJ5
17	247.24.1014.00145	EJ22	18	247.24.1013.59301	EJ23
19	247.24.1014.00441	HG1	20	247.24.1013.59973	HG2
21	247.24.1014.00551	HG12	22	247.24.1013.59989	HG13
23	247.24.1013.59832	HG16	24	247.24.1013.59286	HJ4
25	247.24.1013.59536	HJ6	26	247.24.1014.00645	HJ7
27	247.24.1014.00708	HJ8	28	247.24.1013.58176	HJ21
29	247.24.1014.00474	HT3	30	247.24.1014.00068	HT4
31	247.24.1013.59145	HT5	32	247.24.1013.59771	HT6
33	247.24.1013.58129	HT8	34	247.24.1013.59082	HT9
35	247.24.1014.00067	HT10	36	247.24.1013.59801	HT11
37	247.24.1014.00568	HT14	38	247.24.1013.59098	HT15
39	247.24.1013.59941	HT17	40	247.24.1013.59567	HT18
41	247.24.1013.59319	HT20	42	247.24.1014.00144	HT22
43	247.24.1013.59926	HT24	44	247.24.1013.59113	HT26
45	247.24.1013.58160	SGT1	46	247.24.1013.59505	SGT2
47	247.24.1013.58911	SGT3	48	247.24.1013.59629	T1
49	247.24.1013.59786	T2	50	247.24.1014.00769	T3

This document has been electronically signed and sealed using a Digital Signature. Printed copies without an original signature must be verified using the original electronic version.

ALPINE
AN ITW COMPANY

COA #0 278
Florida Certificate of Product Approval #FL1999

09/04/2024

Alpine, an ITW Company
155 Harlem Ave
North Building, 4th Floor
Glenview, IL 60025
Phone: (800)755-6001
www.alpineitw.com

This item has been digitally signed by Douglas Fleming on the date adjacent to the seal.

Printed copies of this document are not considered signed and sealed and the signature must be verified on any electronic copies.

Site Information:	Page 2:
Customer: Seminole Trusses, Inc.	*Job Number:* B59525R
Job Description: Perri Residence	
Address: 119 SW Hawk Lane, FORT WHITE, FL 32038	

Item	Drawing Number	Truss
51	247.24.1014.00301	T4
53	247.24.1014.00786	T6
55	CNNAILSP1014	
57	PB180160118	

Item	Drawing Number	Truss
52	247.24.1013.59598	T5
54	247.24.1013.59069	T7
56	PB160160118	
58	REPCHRD1014	

General Notes

Truss Design Engineer Scope of Work, Design Assumptions and Design Responsibilities:
The design responsibilities assumed in the preparation of these design drawings are those specified in ANSI/TPI 1, Chapter 2; and the National Design Standard for Metal Plate Connected Wood Truss Construction, by the Truss Plate Institute. The truss component designs conform to the applicable provisions of ANSI/TPI 1 and NDS, the National Design Specification for Wood Construction by AWC. The truss component designs are based on the specified loading and dimension information furnished by others to the Truss Design Engineer. The Truss Design Engineer has no duty to independently verify the accuracy or completeness of the information provided by others and may rely on that information without liability. The responsibility for verification of that information remains with others neither employed nor controlled by the Truss Design Engineer. The Truss Design Engineer's seal and signature on the attached drawings, or cover page listing these drawings, indicates acceptance of professional engineering responsibility solely for the truss component designs and not for the technical information furnished by others which technical information and consequences thereof remain their sole responsibility.

The suitability and use of these drawings for any particular structure is the responsibility of the Building Designer in accordance with ANSI/TPI 1 Chapter 2. The Building Designer is responsible for determining that the dimensions and loads for each truss component match those required by the plans and by the actual use of the individual component, and for ascertaining that the loads shown on the drawings meet or exceed applicable building code requirements and any additional factors required in the particular application. Truss components using metal connector plates with integral teeth shall not be placed in environments that will cause the moisture content of the wood in which plates are embedded to exceed 19% and/or cause corrosion of connector plates and other metal fasteners.

The Truss Design Engineer shall not be responsible for items beyond the specific scope of the agreed contracted work set forth herein, including but not limited to: verifying the dimensions of the truss component, calculation of any of the truss component design loads, inspection of the truss components before or after installation, the design of temporary or permanent bracing and their attachment required in the roof and/or floor systems, the design of diaphragms or shear walls, the design of load transfer connections to and from diaphragms and shear walls, the design of load transfer to the foundation, the design of connections for truss components to their bearing supports, the design of the bearing supports, installation of the truss components, observation of the truss component installation process, review of truss assembly procedures, sequencing of the truss component installation, construction means and methods, site and/or worker safety in the installation of the truss components and/or its connections.

This document may be a high-quality facsimile of the original engineering document which is a digitally signed electronic file with third party authentication. A wet or embossed seal copy of this engineering document is available upon request.

Temporary Lateral Restraint and Bracing:
Temporary lateral restraint and diagonal bracing shall be installed according to the provisions of BCSI chapters B1, B2, B7 and/or B10 (Building Component Safety Information, by TPI and SBCA), or as specified by the Building Designer or other Registered Design Professional. The required locations for lateral restraint and/or bracing depicted on these drawings are only for the permanent lateral support of the truss members to reduce buckling lengths, and do not apply to and may not be relied upon for the temporary stability of the truss components during their installation.

Permanent Lateral Restraint and Bracing:
The required locations for lateral restraint or bracing depicted on these drawings are for the permanent lateral support of the truss members to reduce buckling lengths. Permanent lateral support shall be installed according to the provisions of BCSI chapters B3, B7 and/or B10, or as specified by the Building Designer or other Registered Design Professional. These drawings do not depict or specify installation/erection bracing, wind bracing, portal bracing or similar building stability bracing which are parts of the overall building design to be specified, designed, and detailed by the Building Designer.

Connector Plate Information:
Alpine connector plates are made of ASTM A653 or ASTM A1063 galvanized steel with the following designations, gauges and grades: W=Wave, 20ga, grade 40; H=High Strength, 20ga, grade 60; S=Super Strength, 18ga, grade 60. Information on model code compliance is contained in the ICC Evaluation Service report ESR-1118, available on-line at www.icc-es.org.

Bearing Information:
The bearing area factor, Cb, is considered for the allowable capacity of solid sawn wood bearings supporting trusses that are located a minimum of 3" from the end of the lumber piece.

General Notes (continued)

Coated Lumber:
Coated lumber must be properly re-dried and maintained below 19% or less moisture level through all stages of construction and usage. Coated lumber has no adjustments to lumber properties. Coated lumber may be more brittle than uncoated lumber. Special handling care must be taken to prevent breakage during all handling activities. Refer to manufacturer literature, specifications, and code evaluation reports for restrictions, details, and requirements.

Fire Retardant Treated Lumber:
Fire retardant treated lumber must be properly re-dried and maintained below 19% or less moisture level through all stages of construction and usage. Fire retardant treated lumber may be more brittle than untreated lumber. Special handling care must be taken to prevent breakage during all handling activities.

Key to Terms:
Information provided on drawings reflects a summary of the pertinent information required for the truss design. Detailed information on load cases, reactions, member lengths, forces and members requiring permanent lateral support may be found in calculation sheets available upon written request.

BCDL = Bottom Chord standard design Dead Load in pounds per square foot.
BCLL = Bottom Chord standard design Live Load in pounds per square foot.
C = Coated lumber.
C-AT = AtTEK coated lumber.
C-FX = FX Lumber Guard coated lumber.
C -TE = TechWood 4400 coated lumber.
CL = Certified lumber.
Des Ld = total of TCLL, TCDL, BCLL and BCDL Design Load in pounds per square foot.
FRT = Fire Retardant Treated lumber.
FRT-BF = Boraflame Fire Retardant Treated lumber
FRT-DB = D-Blaze Fire Retardant Treated lumber.
FRT-DC = Dricon Fire Retardant Treated lumber.
FRT-FP = FirePRO Fire Retardant Treated lumber.
FRT-FL = FlamePRO Fire Retardant Treated lumber.
FRT-FT = FlameTech Fire Retardant Treated lumber.
FRT-ON = OnWood Fire Retardant Treated lumber.
FRT-PG = PYRO-GUARD Fire Retardant Treated lumber.
FRT-PR = ProWood Fire Retardant Treated lumber.
g = green lumber.
HORZ(LL) = maximum Horizontal panel point deflection due to Live Load, in inches.
HORZ(TL) = maximum Horizontal panel point long term deflection in inches, due to Total Load, including creep adjustment.
HPL = additional Horizontal Load added to a truss Piece in pounds per linear foot or pounds.
Ic = Incised lumber.
FJ = Finger Jointed lumber.
L/# = user specified divisor for limiting span/deflection ratio for evaluation of actual L/defl value.
L/defl = ratio of Length between bearings, in inches, divided by the vertical Deflection due to creep, in inches, at the referenced panel point. Reported as 999 if greater than or equal to 999.
Loc = Location, starting location of left end of bearing or panel point (joint) location of deflection.
Max BC CSI = Maximum bending and axial Combined Stress Index for Bottom Chords for all load cases.
Max TC CSI = Maximum bending and axial Combined Stress Index for Top Chords for all load cases.
Max Web CSI= Maximum bending and axial Combined Stress Index for Webs for all load cases.
NCBCLL = Non-Concurrent Bottom Chord design Live Load in pounds per square foot.
PL = additional Load applied at a user specified angle on a truss Piece in pounds per linear foot or pounds.
PLB = additional vertical load added to a Bottom chord Piece of a truss in pounds per linear foot or pounds
PLT = additional vertical load added to a Top chord Piece of a truss in pounds per linear foot or pounds.
PP = Panel Point.
R = maximum downward design Reaction, in pounds, from all specified gravity load cases, at the indicated location (Loc).
-R = maximum upward design Reaction, in pounds, from all specified gravity load cases, at the identified location (Loc).
Rh = maximum horizontal design Reaction in either direction, in pounds, from all specified gravity load cases, at the indicated location (Loc).
RL = maximum horizontal design Reaction in either direction, in pounds, from all specified non-gravity (wind or seismic) load cases, at the indicated location (Loc).

General Notes (continued)

Key to Terms (continued):
Rw = maximum downward design Reaction, in pounds, from all specified non-gravity (wind or seismic) load cases, at the identified location (Loc).
TCDL = Top Chord standard design Dead Load in pounds per square foot.
TCLL = Top Chord standard design Live Load in pounds per square foot.
U = maximum Upward design reaction, in pounds, from all specified non-gravity (wind or seismic) load cases, at the indicated location (Loc).
VERT(CL) = maximum Vertical panel point deflection in inches due to Live Load and Creep Component of Dead Load in inches.
VERT(CTL) = maximum Vertical panel point deflection ratios due to Live Load and Creep Component of Dead Load, and maximum long term Vertical panel point deflection in inches due to Total load, including creep adjustment.
VERT(LL) = maximum Vertical panel point deflection in inches due to Live Load.
VERT(TL) = maximum Vertical panel point long term deflection in inches due to Total load, including creep adjustment.
W = Width of non-hanger bearing, in inches.

Refer to ASCE-7 for Wind and Seismic abbreviations.
Uppercase Acronyms not explained above are as defined in TPI 1.

References:
1. AWC: American Wood Council; 222 Catoctin Circle SE, Suite 201; Leesburg, VA 20175; www.awc.org.
2. ICC: International Code Council; www.iccsafe.org.
3. Alpine, a division of ITW Building Components Group Inc.: 155 Harlem Ave, North Building, 4th Floor, Glenview, IL 60025; www.alpineitw.com.
4. TPI: Truss Plate Institute, 2670 Crain Highway, Suite 203, Waldorf, MD 20601; www.tpinst.org.
5. SBCA: Wood Truss Council of America, 6300 Enterprise Lane, Madison, WI 53719; www. sbcacomponents.com

SEQN: 214641 / JACK FROM: RNB	Ply: 1 Qty: 8	**Job Number:** B59525R Perri Residence **Truss Label:** CJ1	Cust: R 857 JRef: 1Y2Y8570005 T9 DrwNo: 247.24.1013.59582 SSB / DF 09/03/2024

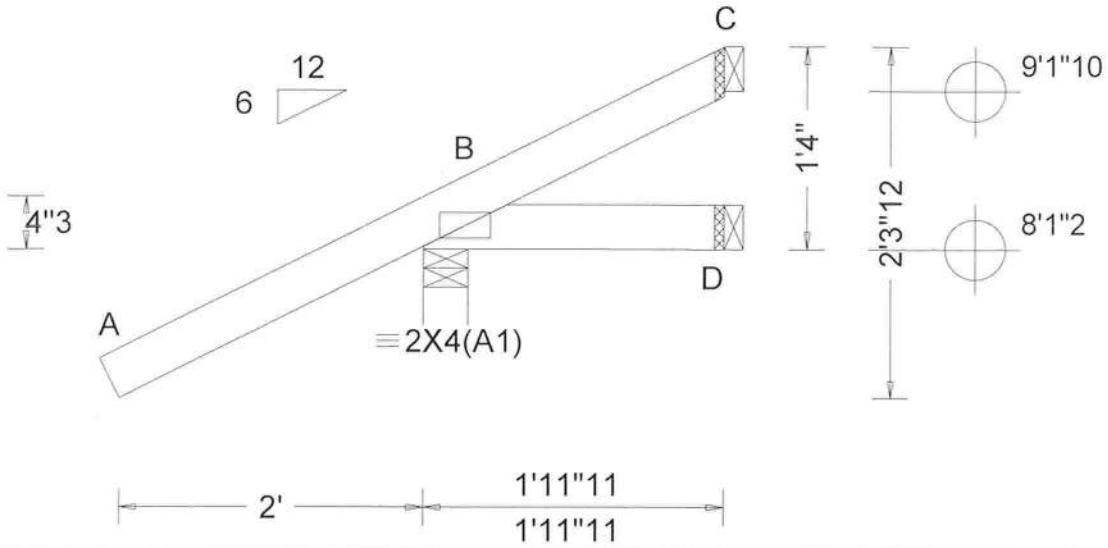

Loading Criteria (psf)	**Wind Criteria**	**Snow Criteria** (Pg,Pf in PSF)	**Defl/CSI Criteria**
TCLL: 20.00 TCDL: 7.00 BCLL: 0.00 BCDL: 10.00 Des Ld: 37.00 NCBCLL: 10.00 Soffit: 2.00 Load Duration: 1.25 Spacing: 24.0 "	Wind Std: ASCE 7-22 Speed: 130 mph Enclosure: Closed Risk Category: II EXP: B Kzt: NA Mean Height: 15.00 ft TCDL: 4.2 psf BCDL: 6.0 psf MWFRS Parallel Dist: 0 to h/2 C&C Dist a: 3.00 ft Loc. from endwall: Any GCpi: 0.18 Wind Duration: 1.60	Pg: NA Ct: NA CAT: NA Pf: NA Ce: NA Lu: NA Cs: NA Snow Duration: NA Building Code: FBC 8th Ed. 2023 Res. TPI Std: 2014 Rep Fac: Yes FT/RT:20(0)/0(0) Plate Type(s): WAVE	PP Deflection in loc L/defl L/# VERT(LL): NA VERT(CL): NA HORZ(LL): -0.001 B - - HORZ(TL): 0.002 B - - Creep Factor: 2.0 Max TC CSI: 0.259 Max BC CSI: 0.062 Max Web CSI: 0.000 VIEW Ver: 23.02.01A.1204.18

▲ Maximum Reactions (lbs)

	Gravity			Non-Gravity		
Loc	R+	/ R-	/ Rh	/ Rw	/ U	/ RL
B	285	/-	/-	/178	/39	/43
D	24	/-6	/-	/20	/7	/-
C	-	/-5	/-	/23	/21	/-

Wind reactions based on MWFRS
B Brg Wid = 3.5 Min Req = 1.5 (Support)
D Brg Wid = 1.5 Min Req = -
C Brg Wid = 1.5 Min Req = -
Bearing B Fcperp = 425psi.
Members not listed have forces less than 375#

Lumber

Top chord: 2x4 SP #1;
Bot chord: 2x4 SP #1;

Plating Notes

Plates sized for a minimum of 3.50 sq.in./piece.

Wind

Wind loads based on MWFRS with additional C&C member design.

Wind loading based on both gable and hip roof types.

DOUGLAS FLEMING
LICENSE
No. 66648
STATE OF
FLORIDA
PROFESSIONAL ENGINEER

COA #0 278
Florida Certificate of Product Approval #FL1999
09/04/2024

****WARNING**** READ AND FOLLOW ALL NOTES ON THIS DRAWING!
****IMPORTANT**** FURNISH THIS DRAWING TO ALL CONTRACTORS INCLUDING THE INSTALLERS

Trusses require extreme care in fabricating, handling, shipping, installing and bracing. Refer to and follow the latest edition of BCSI (Building Component Safety Information, by TPI and SBCA) for safety practices prior to performing these functions. Installers shall provide temporary bracing per BCSI. Unless noted otherwise, top chord shall have properly attached structural sheathing and bottom chord shall have a properly attached rigid ceiling. Locations shown for permanent lateral restraint of webs shall have continuous lateral restraint (CLR), installed with diagonal bracing installed on the CLR per BCSI sections B3, B7, or B10, as applicable. Apply plates to each face of truss and position as shown above and on the Joint Details, unless noted otherwise. Refer to drawings 160A-Z for standard plate positions. Refer to job's General Notes page for additional information.

Alpine, a division of ITW Building Components Group Inc. shall not be responsible for any deviation from this drawing, any failure to build the truss in conformance with ANSI/TPI 1, or for handling, shipping, installation and bracing of trusses. A seal on this drawing or cover page listing this drawing, indicates acceptance of professional engineering responsibility solely for the design shown. The suitability and use of this drawing for any structure is the responsibility of the Building Designer per ANSI/TPI 1 Sec.2.

For more information see these web sites: Alpine: alpineitw.com; TPI: tpinst.org; SBCA: sbcacomponents.com; ICC: iccsafe.org; AWC: awc.org

ALPINE
AN ITW COMPANY
155 Harlem Ave
North Building, 4th Floor
Glenview, IL 60025

SEQN: 214643 / JACK FROM: RNB	Ply: 1 Qty: 10	**Job Number:** B59525R Perri Residence **Truss Label:** CJ2	Cust: R 857 JRef: 1Y2Y8570005 T8 DrwNo: 247.24.1013.59363 SSB / FV 09/03/2024

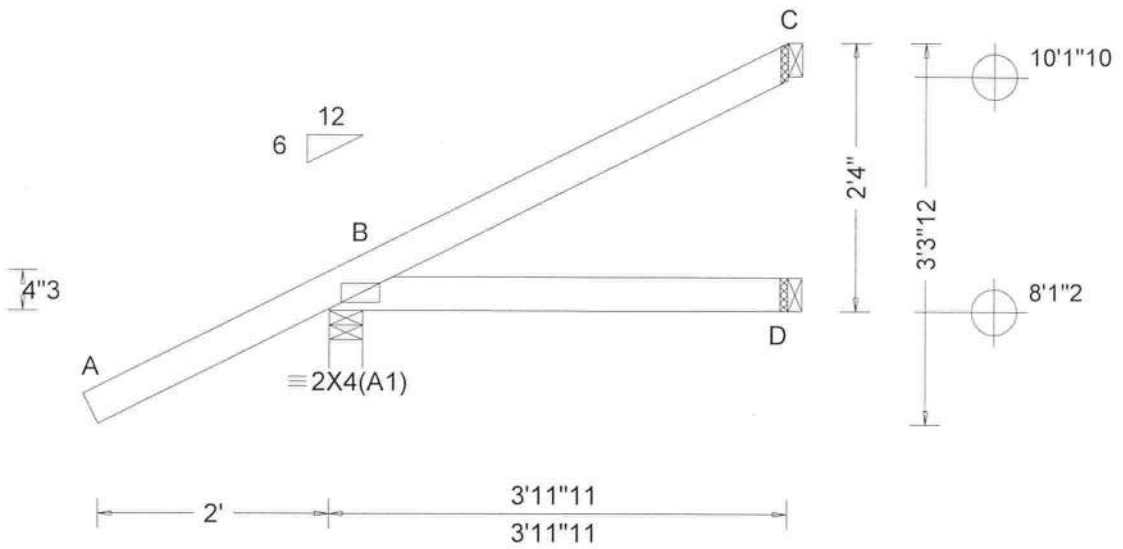

Loading Criteria (psf)	**Wind Criteria**	**Snow Criteria** (Pg,Pf in PSF)	**Defl/CSI Criteria**
TCLL: 20.00 TCDL: 7.00 BCLL: 0.00 BCDL: 10.00 Des Ld: 37.00 NCBCLL: 10.00 Soffit: 2.00 Load Duration: 1.25 Spacing: 24.0 "	Wind Std: ASCE 7-22 Speed: 130 mph Enclosure: Closed Risk Category: II EXP: B Kzt: NA Mean Height: 15.00 ft TCDL: 4.2 psf BCDL: 6.0 psf MWFRS Parallel Dist: 0 to h/2 C&C Dist a: 3.00 ft Loc. from endwall: Any GCpi: 0.18 Wind Duration: 1.60	Pg: NA Ct: NA CAT: NA Pf: NA Ce: NA Lu: NA Cs: NA Snow Duration: NA Building Code: FBC 8th Ed. 2023 Res. TPI Std: 2014 Rep Fac: Yes FT/RT:20(0)/0(0) Plate Type(s): WAVE	PP Deflection in loc L/defl L/# VERT(LL): NA VERT(CL): NA HORZ(LL): 0.001 B - - HORZ(TL): 0.002 B - - Creep Factor: 2.0 Max TC CSI: 0.259 Max BC CSI: 0.089 Max Web CSI: 0.000 VIEW Ver: 23.02.01A.1204.18

▲ Maximum Reactions (lbs)

	Gravity			Non-Gravity		
Loc	R+	/ R-	/ Rh	/ Rw	/ U	/ RL
B	318	/-	/-	/191	/22	/67
D	66	/-	/-	/35	/-	/-
C	76	/-	/-	/34	/27	/-

Wind reactions based on MWFRS
B Brg Wid = 3.5 Min Req = 1.5 (Support)
D Brg Wid = 1.5 Min Req = -
C Brg Wid = 1.5 Min Req = -
Bearing B Fcperp = 425psi.
Members not listed have forces less than 375#

Lumber

Top chord: 2x4 SP #1;
Bot chord: 2x4 SP #1;

Plating Notes

Plates sized for a minimum of 3.50 sq.in./piece.

Wind

Wind loads based on MWFRS with additional C&C member design.

Wind loading based on both gable and hip roof types.

DOUGLAS FLEMING
LICENSE
No. 66648
STATE OF
FLORIDA
PROFESSIONAL ENGINEER

COA #0 248
Florida Certificate of Product Approval #FL1999
09/04/2024

WARNING READ AND FOLLOW ALL NOTES ON THIS DRAWING!
IMPORTANT FURNISH THIS DRAWING TO ALL CONTRACTORS INCLUDING THE INSTALLERS

Trusses require extreme care in fabricating, handling, shipping, installing and bracing. Refer to and follow the latest edition of BCSI (Building Component Safety Information, by TPI and SBCA) for safety practices prior to performing these functions. Installers shall provide temporary bracing per BCSI. Unless noted otherwise, top chord shall have properly attached structural sheathing and bottom chord shall have a properly attached rigid ceiling. Locations shown for permanent lateral restraint of webs shall have continuous lateral restraint (CLR), installed with diagonal bracing installed on the CLR per BCSI sections B3, B7, or B10, as applicable. Apply plates to each face of truss and position as shown above and on the Joint Details, unless noted otherwise. Refer to drawings 160A-Z for standard plate positions. Refer to job's General Notes page for additional information.

Alpine, a division of ITW Building Components Group Inc. shall not be responsible for any deviation from this drawing, any failure to build the truss in conformance with ANSI/TPI 1, or for handling, shipping, installation and bracing of trusses. A seal on this drawing or cover page listing this drawing, indicates acceptance of professional engineering responsibility solely for the design shown. The suitability and use of this drawing for any structure is the responsibility of the Building Designer per ANSI/TPI 1 Sec.2.

For more information see these web sites: Alpine: alpineitw.com; TPI: tpinst.org; SBCA: sbcacomponents.com; ICC: iccsafe.org; AWC: awc.org

ALPINE
AN ITW COMPANY
155 Harlem Ave
North Building, 4th Floor
Glenview, IL 60025

SEQN: 214647 / JACK FROM: RNB	Ply: 1 Qty: 10	**Job Number:** B59525R Perri Residence **Truss Label:** CJ3	Cust: R 857 JRef: 1Y2Y8570005 T7 / DrwNo: 247.24.1014.00224 SSB / DF 09/03/2024

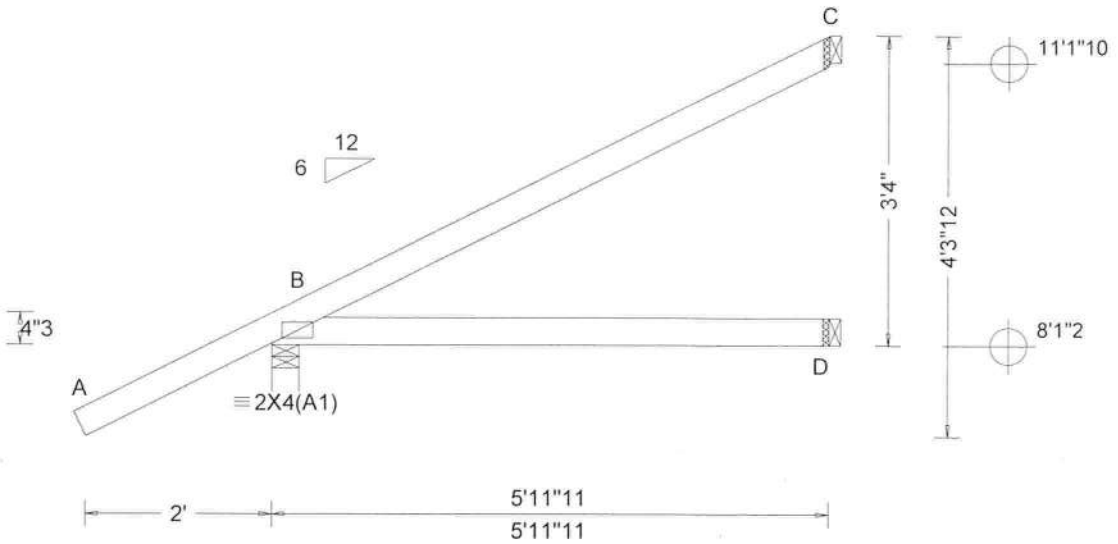

Loading Criteria (psf)	**Wind Criteria**	**Snow Criteria** (Pg,Pf in PSF)	**Defl/CSI Criteria**
TCLL: 20.00 TCDL: 7.00 BCLL: 0.00 BCDL: 10.00 Des Ld: 37.00 NCBCLL: 10.00 Soffit: 2.00 Load Duration: 1.25 Spacing: 24.0 "	Wind Std: ASCE 7-22 Speed: 130 mph Enclosure: Closed Risk Category: II EXP: B Kzt: NA Mean Height: 15.00 ft TCDL: 4.2 psf BCDL: 6.0 psf MWFRS Parallel Dist: 0 to h/2 C&C Dist a: 3.00 ft Loc. from endwall: not in 4.50 ft GCpi: 0.18 Wind Duration: 1.60	Pg: NA Ct: NA CAT: NA Pf: NA Ce: NA Lu: NA Cs: NA Snow Duration: NA Building Code: FBC 8th Ed. 2023 Res. TPI Std: 2014 Rep Fac: Yes FT/RT:20(0)/0(0) Plate Type(s): WAVE	PP Deflection in loc L/defl L/# VERT(LL): NA VERT(CL): NA HORZ(LL): 0.005 B - - HORZ(TL): 0.010 B - - Creep Factor: 2.0 Max TC CSI: 0.295 Max BC CSI: 0.244 Max Web CSI: 0.000 VIEW Ver: 23.02.01A.1204.18

▲ Maximum Reactions (lbs)

	Gravity			Non-Gravity		
Loc	R+	/ R-	/ Rh	/ Rw	/ U	/ RL
B	381	/-	/-	/224	/15	/91
D	105	/-	/-	/56	/-	/-
C	135	/-	/-	/65	/45	/-

Wind reactions based on MWFRS
B Brg Wid = 3.5 Min Req = 1.5 (Support)
D Brg Wid = 1.5 Min Req = -
C Brg Wid = 1.5 Min Req = -
Bearing B Fcperp = 425psi.
Members not listed have forces less than 375#

Lumber

Top chord: 2x4 SP #1;
Bot chord: 2x4 SP #1;

Plating Notes

Plates sized for a minimum of 3.50 sq.in./piece.

Wind

Wind loads based on MWFRS with additional C&C member design.

Wind loading based on both gable and hip roof types.

DOUGLAS FLEMING
LICENSE
No. 66648
STATE OF
FLORIDA
PROFESSIONAL ENGINEER

COA #0 248
Florida Certificate of Product Approval #FL1999
09/04/2024

****WARNING**** READ AND FOLLOW ALL NOTES ON THIS DRAWING!
****IMPORTANT**** FURNISH THIS DRAWING TO ALL CONTRACTORS INCLUDING THE INSTALLERS

Trusses require extreme care in fabricating, handling, shipping, installing and bracing. Refer to and follow the latest edition of BCSI (Building Component Safety Information, by TPI and SBCA) for safety practices prior to performing these functions. Installers shall provide temporary bracing per BCSI. Unless noted otherwise, top chord shall have properly attached structural sheathing and bottom chord shall have a properly attached rigid ceiling. Locations shown for permanent lateral restraint of webs shall have continuous lateral restraint (CLR), installed with diagonal bracing installed on the CLR per BCSI sections B3, B7, or B10, as applicable. Apply plates to each face of truss and position as shown above and on the Joint Details, unless noted otherwise. Refer to drawings 160A-Z for standard plate positions. Refer to job's General Notes page for additional information.

Alpine, a division of ITW Building Components Group Inc. shall not be responsible for any deviation from this drawing, any failure to build the truss in conformance with ANSI/TPI 1, or for handling, shipping, installation and bracing of trusses. A seal on this drawing or cover page listing this drawing, indicates acceptance of professional engineering responsibility solely for the design shown. The suitability and use of this drawing for any structure is the responsibility of the Building Designer per ANSI/TPI 1 Sec.2.

For more information see these web sites: Alpine: alpineitw.com; TPI: tpinst.org; SBCA: sbcacomponents.com; ICC: iccsafe.org; AWC: awc.org

ALPINE
AN ITW COMPANY
155 Harlem Ave
North Building, 4th Floor
Glenview, IL 60025

SEQN: 214770 / JACK FROM: RNB	Ply: 1 Qty: 2	**Job Number:** B59525R Perri Residence **Truss Label:** CJ9	Cust: R 857 JRef: 1Y2Y8570005 T42 / DrwNo: 247.24.1013.59285 SSB / DF 09/03/2024

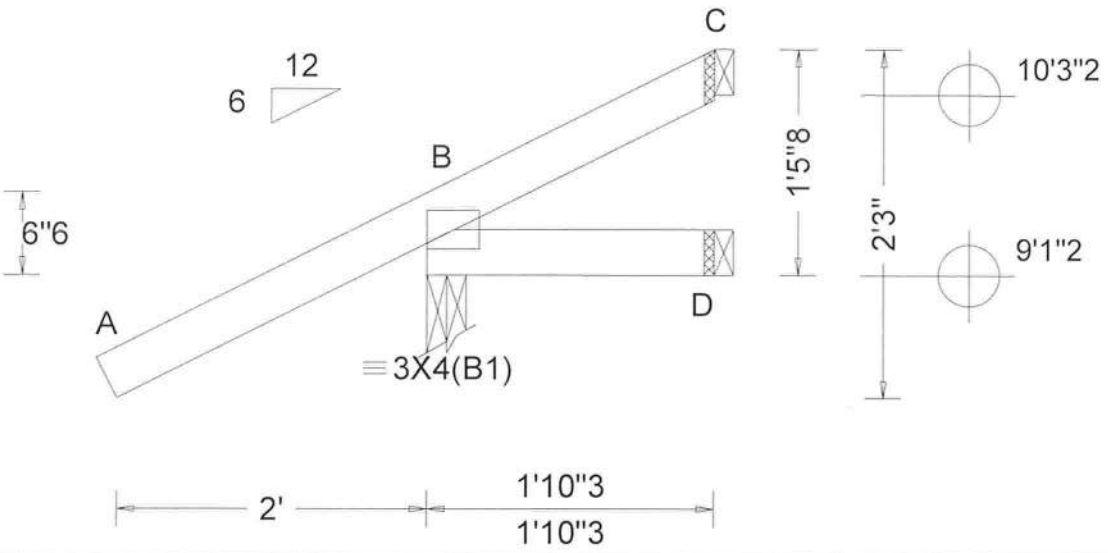

Loading Criteria (psf)	**Wind Criteria**	**Snow Criteria** (Pg,Pf in PSF)	**Defl/CSI Criteria**
TCLL: 20.00 TCDL: 7.00 BCLL: 0.00 BCDL: 10.00 Des Ld: 37.00 NCBCLL: 10.00 Soffit: 2.00 Load Duration: 1.25 Spacing: 24.0 "	Wind Std: ASCE 7-22 Speed: 130 mph Enclosure: Closed Risk Category: II EXP: B Kzt: NA Mean Height: 15.00 ft TCDL: 4.2 psf BCDL: 6.0 psf MWFRS Parallel Dist: 0 to h/2 C&C Dist a: 3.00 ft Loc. from endwall: Any GCpi: 0.18 Wind Duration: 1.60	Pg: NA Ct: NA CAT: NA Pf: NA Ce: NA Lu: NA Cs: NA Snow Duration: NA Building Code: FBC 8th Ed. 2023 Res. TPI Std: 2014 Rep Fac: Yes FT/RT:20(0)/0(0) Plate Type(s): WAVE	PP Deflection in loc L/defl L/# VERT(LL): NA VERT(CL): NA HORZ(LL): -0.001 C - - HORZ(TL): 0.002 C - - Creep Factor: 2.0 Max TC CSI: 0.259 Max BC CSI: 0.038 Max Web CSI: 0.000 VIEW Ver: 23.02.01A.1204.18

▲ Maximum Reactions (lbs)

	Gravity			Non-Gravity		
Loc	R+	/ R-	/ Rh	/ Rw	/ U	/ RL
B	276	/-	/-	/171	/38	/42
D	29	/-	/-	/15	/-	/-
C	-	/-15	/-	/25	/28	/-

Wind reactions based on MWFRS
B Brg Wid = 3.0 Min Req = 1.5 (Support)
D Brg Wid = 1.5 Min Req = -
C Brg Wid = 1.5 Min Req = -
Bearing B Fcperp = 425psi.
Members not listed have forces less than 375#

Lumber

Top chord: 2x4 SP #1;
Bot chord: 2x4 SP #1;

Plating Notes

Plates sized for a minimum of 3.50 sq.in./piece.

Wind

Wind loads based on MWFRS with additional C&C member design.

Wind loading based on both gable and hip roof types.

DOUGLAS FLEMING
LICENSE
No. 66648
STATE OF
FLORIDA
PROFESSIONAL ENGINEER

COA #0 278
Florida Certificate of Product Approval #FL1999
09/04/2024

WARNING READ AND FOLLOW ALL NOTES ON THIS DRAWING!
IMPORTANT FURNISH THIS DRAWING TO ALL CONTRACTORS INCLUDING THE INSTALLERS

Trusses require extreme care in fabricating, handling, shipping, installing and bracing. Refer to and follow the latest edition of BCSI (Building Component Safety Information, by TPI and SBCA) for safety practices prior to performing these functions. Installers shall provide temporary bracing per BCSI. Unless noted otherwise, top chord shall have properly attached structural sheathing and bottom chord shall have a properly attached rigid ceiling. Locations shown for permanent lateral restraint of webs shall have continuous lateral restraint (CLR), installed with diagonal bracing installed on the CLR per BCSI sections B3, B7, or B10, as applicable. Apply plates to each face of truss and position as shown above and on the Joint Details, unless noted otherwise. Refer to drawings 160A-2 for standard plate positions. Refer to job's General Notes page for additional information.

Alpine, a division of ITW Building Components Group Inc. shall not be responsible for any deviation from this drawing, any failure to build the truss in conformance with ANSI/TPI 1, or for handling, shipping, installation and bracing of trusses. A seal on this drawing or cover page listing this drawing, indicates acceptance of professional engineering responsibility solely for the design shown. The suitability and use of this drawing for any structure is the responsibility of the Building Designer per ANSI/TPI 1 Sec.2.

For more information see these web sites: Alpine: alpineitw.com; TPI: tpinst.org; SBCA: sbcacomponents.com; ICC: iccsafe.org; AWC: awc.org

ALPINE
AN ITW COMPANY
155 Harlem Ave
North Building, 4th Floor
Glenview, IL 60025

SEQN: 214583 / JACK FROM: RNB	Ply: 1 Qty: 2	**Job Number:** B59525R Perri Residence **Truss Label:** CJ10	Cust: R 857 JRef: 1Y2Y8570005 T38 / DrwNo: 247.24.1014.00629 SSB / DF 09/03/2024

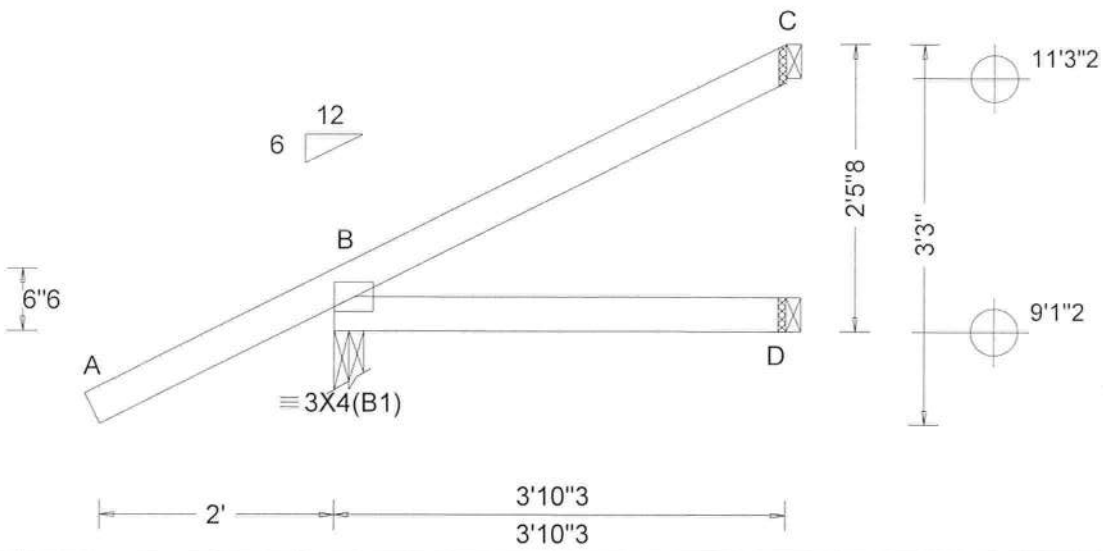

Loading Criteria (psf)	Wind Criteria	Snow Criteria (Pg,Pf in PSF)	Defl/CSI Criteria
TCLL: 20.00 TCDL: 7.00 BCLL: 0.00 BCDL: 10.00 Des Ld: 37.00 NCBCLL: 10.00 Soffit: 2.00 Load Duration: 1.25 Spacing: 24.0 "	Wind Std: ASCE 7-22 Speed: 130 mph Enclosure: Closed Risk Category: II EXP: B Kzt: NA Mean Height: 15.00 ft TCDL: 4.2 psf BCDL: 6.0 psf MWFRS Parallel Dist: 0 to h/2 C&C Dist a: 3.00 ft Loc. from endwall: not in 4.50 ft GCpi: 0.18 Wind Duration: 1.60	Pg: NA Ct: NA CAT: NA Pf: NA Ce: NA Lu: NA Cs: NA Snow Duration: NA Building Code: FBC 8th Ed. 2023 Res. TPI Std: 2014 Rep Fac: Yes FT/RT:20(0)/0(0) Plate Type(s): WAVE	PP Deflection in loc L/defl L/# VERT(LL): NA VERT(CL): NA HORZ(LL): 0.001 B - - HORZ(TL): 0.001 B - - Creep Factor: 2.0 Max TC CSI: 0.219 Max BC CSI: 0.099 Max Web CSI: 0.000 VIEW Ver: 23.02.01A.1204.18

▲ Maximum Reactions (lbs)

	Gravity			Non-Gravity		
Loc	R+	/ R-	/ Rh	/ Rw	/ U	/ RL
B	310	/-	/-	/185	/20	/66
D	69	/-	/-	/36	/-	/-
C	74	/-	/-	/32	/30	/-

Wind reactions based on MWFRS
B Brg Wid = 3.0 Min Req = 1.5 (Support)
D Brg Wid = 1.5 Min Req = -
C Brg Wid = 1.5 Min Req = -
Bearing B Fcperp = 425psi.
Members not listed have forces less than 375#

Lumber

Top chord: 2x4 SP #1;
Bot chord: 2x4 SP #1;

Plating Notes

Plates sized for a minimum of 3.50 sq.in./piece.

Wind

Wind loads based on MWFRS with additional C&C member design.

Wind loading based on both gable and hip roof types.

DOUGLAS FLEMING
LICENSE
No. 66648
STATE OF
FLORIDA
PROFESSIONAL ENGINEER

COA #0 278
Florida Certificate of Product Approval #FL1999
09/04/2024

WARNING READ AND FOLLOW ALL NOTES ON THIS DRAWING!
IMPORTANT FURNISH THIS DRAWING TO ALL CONTRACTORS INCLUDING THE INSTALLERS

Trusses require extreme care in fabricating, handling, shipping, installing and bracing. Refer to and follow the latest edition of BCSI (Building Component Safety Information, by TPI and SBCA) for safety practices prior to performing these functions. Installers shall provide temporary bracing per BCSI. Unless noted otherwise, top chord shall have properly attached structural sheathing and bottom chord shall have a properly attached rigid ceiling. Locations shown for permanent lateral restraint of webs shall have continuous lateral restraint (CLR), installed with diagonal bracing installed on the CLR per BCSI sections B3, B7, or B10, as applicable. Apply plates to each face of truss and position as shown above and on the Joint Details, unless noted otherwise. Refer to drawings 160A-Z for standard plate positions. Refer to job's General Notes page for additional information.

Alpine, a division of ITW Building Components Group Inc. shall not be responsible for any deviation from this drawing, any failure to build the truss in conformance with ANSI/TPI 1, or for handling, shipping, installation and bracing of trusses. A seal on this drawing or cover page listing this drawing, indicates acceptance of professional engineering responsibility solely for the design shown. The suitability and use of this drawing for any structure is the responsibility of the Building Designer per ANSI/TPI 1 Sec.2.

For more information see these web sites: Alpine: alpineitw.com; TPI: tpinst.org; SBCA: sbcacomponents.com; ICC: iccsafe.org; AWC: awc.org

ALPINE AN ITW COMPANY
155 Harlem Ave
North Building, 4th Floor
Glenview, IL 60025

SEQN: 214663 / JACK FROM: RNB	Ply: 1 Qty: 2	**Job Number:** B59525R Perri Residence **Truss Label:** CJ11	Cust: R 857 JRef: 1Y2Y8570005 T37 / DrwNo: 247.24.1013.59738 SSB / DF 09/03/2024

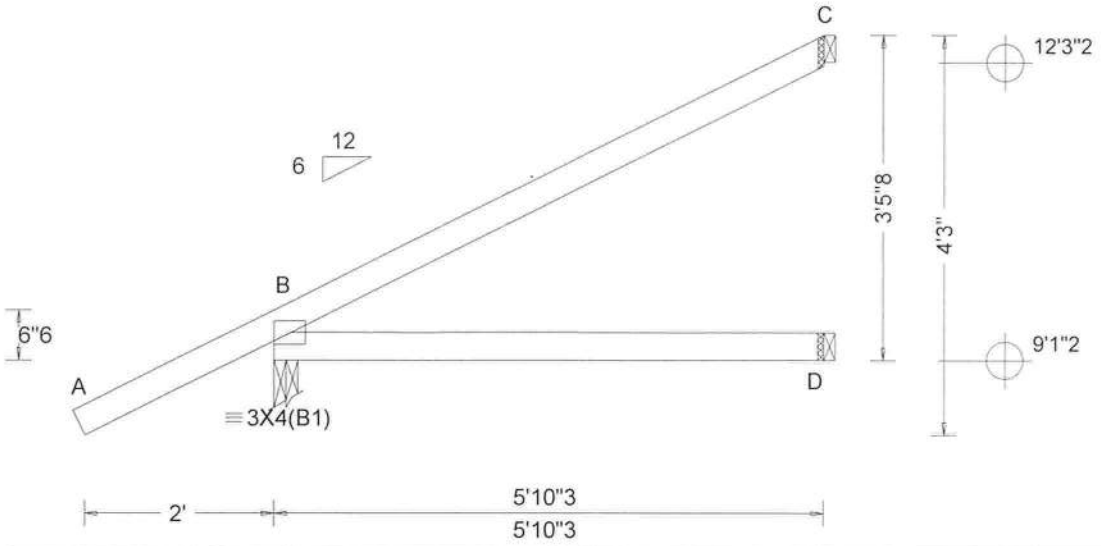

Loading Criteria (psf)
TCLL: 20.00
TCDL: 7.00
BCLL: 0.00
BCDL: 10.00
Des Ld: 37.00
NCBCLL: 10.00
Soffit: 2.00
Load Duration: 1.25
Spacing: 24.0 "

Wind Criteria
Wind Std: ASCE 7-22
Speed: 130 mph
Enclosure: Closed
Risk Category: II
EXP: B Kzt: NA
Mean Height: 15.00 ft
TCDL: 4.2 psf
BCDL: 6.0 psf
MWFRS Parallel Dist: h/2 to h
C&C Dist a: 3.00 ft
Loc. from endwall: not in 4.50 ft
GCpi: 0.18
Wind Duration: 1.60

Snow Criteria (Pg,Pf in PSF)
Pg: NA Ct: NA CAT: NA
Pf: NA Ce: NA
Lu: NA Cs: NA
Snow Duration: NA

Building Code:
FBC 8th Ed. 2023 Res.
TPI Std: 2014
Rep Fac: Yes
FT/RT:20(0)/0(0)
Plate Type(s):
WAVE

Defl/CSI Criteria
PP Deflection in loc L/defl L/#
VERT(LL): NA
VERT(CL): NA
HORZ(LL): 0.003 B - -
HORZ(TL): 0.006 B - -
Creep Factor: 2.0
Max TC CSI: 0.301
Max BC CSI: 0.260
Max Web CSI: 0.000

VIEW Ver: 23.02.01A.1204.18

▲ Maximum Reactions (lbs)

	Gravity			Non-Gravity		
Loc	R+	/ R-	/ Rh	/ Rw	/ U	/ RL
B	373	/-	/-	/219	/14	/90
D	108	/-	/-	/56	/-	/-
C	136	/-	/-	/64	/49	/-

Wind reactions based on MWFRS
B Brg Wid = 3.0 Min Req = 1.5 (Support)
D Brg Wid = 1.5 Min Req = -
C Brg Wid = 1.5 Min Req = -
Bearing B Fcperp = 425psi.
Members not listed have forces less than 375#

Lumber

Top chord: 2x4 SP #1;
Bot chord: 2x4 SP #1;

Plating Notes

Plates sized for a minimum of 3.50 sq.in./piece.

Wind

Wind loads based on MWFRS with additional C&C member design.

Wind loading based on both gable and hip roof types.

DOUGLAS FLEMING
LICENSE
No. 66648
STATE OF
FLORIDA
PROFESSIONAL ENGINEER

COA #0 278
Florida Certificate of Product Approval #FL1999
09/04/2024

****WARNING**** READ AND FOLLOW ALL NOTES ON THIS DRAWING!
****IMPORTANT**** FURNISH THIS DRAWING TO ALL CONTRACTORS INCLUDING THE INSTALLERS

Trusses require extreme care in fabricating, handling, shipping, installing and bracing. Refer to and follow the latest edition of BCSI (Building Component Safety Information, by TPI and SBCA) for safety practices prior to performing these functions. Installers shall provide temporary bracing per BCSI. Unless noted otherwise, top chord shall have properly attached structural sheathing and bottom chord shall have a properly attached rigid ceiling. Locations shown for permanent lateral restraint of webs shall have continuous lateral restraint (CLR), installed with diagonal bracing installed on the CLR per BCSI sections B3, B7, or B10, as applicable. Apply plates to each face of truss and position as shown above and on the Joint Details, unless noted otherwise. Refer to drawings 160A-Z for standard plate positions. Refer to job's General Notes page for additional information.

Alpine, a division of ITW Building Components Group Inc. shall not be responsible for any deviation from this drawing, any failure to build the truss in conformance with ANSI/TPI 1, or for handling, shipping, installation and bracing of trusses. A seal on this drawing or cover page listing this drawing, indicates acceptance of professional engineering responsibility solely for the design shown. The suitability and use of this drawing for any structure is the responsibility of the Building Designer per ANSI/TPI 1 Sec.2.

For more information see these web sites: Alpine: alpineitw.com; TPI: tpinst.org; SBCA: sbcacomponents.com; ICC: iccsafe.org; AWC: awc.org

ALPINE
AN ITW COMPANY
155 Harlem Ave
North Building, 4th Floor
Glenview, IL 60025

SEQN: 214651 / JACK FROM: RNB	Ply: 1 Qty: 1	**Job Number:** B59525R Perri Residence **Truss Label:** CJ12	Cust: R 857 JRef:1Y2Y8570005 T43 / DrwNo: 247.24.1013.58145 SSB / DF 09/03/2024

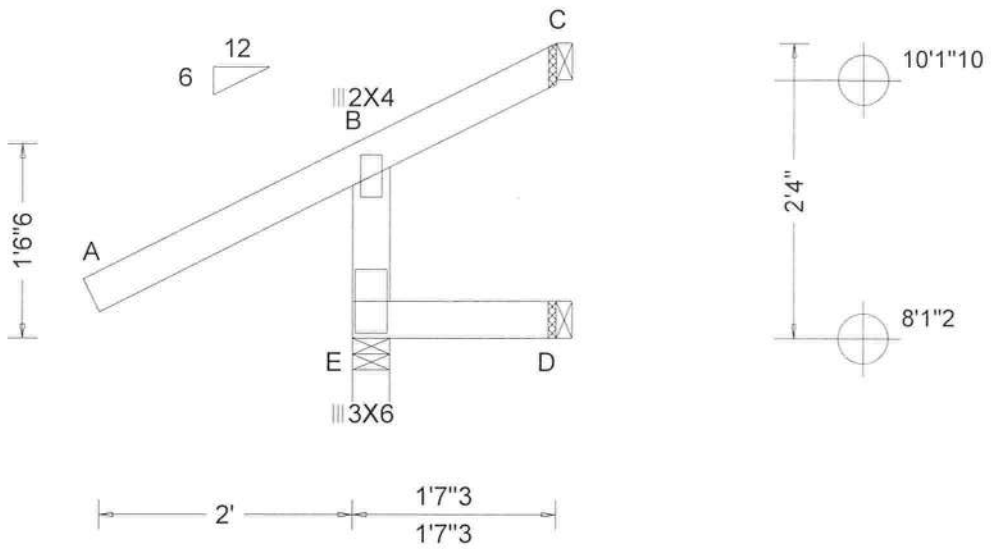

Loading Criteria (psf)

TCLL:	20.00
TCDL:	7.00
BCLL:	0.00
BCDL:	10.00
Des Ld:	37.00
NCBCLL:	10.00
Soffit:	2.00

Load Duration: 1.25
Spacing: 24.0 "

Wind Criteria
Wind Std: ASCE 7-22
Speed: 130 mph
Enclosure: Closed
Risk Category: II
EXP: B Kzt: NA
Mean Height: 15.00 ft
TCDL: 4.2 psf
BCDL: 6.0 psf
MWFRS Parallel Dist: 0 to h/2
C&C Dist a: 3.00 ft
Loc. from endwall: not in 4.50 ft
GCpi: 0.18
Wind Duration: 1.60

Snow Criteria (Pg,Pf in PSF)
Pg: NA Ct: NA CAT: NA
Pf: NA Ce: NA
Lu: NA Cs: NA
Snow Duration: NA

Building Code:
FBC 8th Ed. 2023 Res.
TPI Std: 2014
Rep Fac: Yes
FT/RT:20(0)/0(0)
Plate Type(s):
WAVE

Defl/CSI Criteria

PP Deflection in	loc	L/defl	L/#
VERT(LL): 0.000	B	999	360
VERT(CL): 0.001	B	999	240
HORZ(LL): 0.000	B	-	-
HORZ(TL): 0.000	B	-	-

Creep Factor: 2.0
Max TC CSI: 0.206
Max BC CSI: 0.018
Max Web CSI: 0.106

VIEW Ver: 23.02.01A.1204.18

▲ Maximum Reactions (lbs)

	Gravity			Non-Gravity		
Loc	R+	/ R-	/ Rh	/ Rw	/ U	/ RL
E	265	/-	/-	/204	/76	/-
D	32	/-	/-	/16	/-	/13
C	-	/-36	/-	/42	/72	/65

Wind reactions based on MWFRS
E Brg Wid = 3.5 Min Req = 1.5 (Support)
D Brg Wid = 1.5 Min Req = -
C Brg Wid = 1.5 Min Req = -
Bearing E Fcperp = 425psi.
Members not listed have forces less than 375#

Lumber

Top chord: 2x4 SP #1;
Bot chord: 2x4 SP #1;
Webs: 2x4 SP #3;

Plating Notes

Plates sized for a minimum of 3.50 sq.in./piece.

Wind

Wind loads based on MWFRS with additional C&C member design.

Left end vertical not exposed to wind pressure.

Wind loading based on both gable and hip roof types.

DOUGLAS FLEMING
LICENSE
No. 66648
STATE OF
FLORIDA
PROFESSIONAL ENGINEER

COA #0 248
Florida Certificate of Product Approval #FL1999
09/04/2024

WARNING READ AND FOLLOW ALL NOTES ON THIS DRAWING!
IMPORTANT FURNISH THIS DRAWING TO ALL CONTRACTORS INCLUDING THE INSTALLERS

Trusses require extreme care in fabricating, handling, shipping, installing and bracing. Refer to and follow the latest edition of BCSI (Building Component Safety Information, by TPI and SBCA) for safety practices prior to performing these functions. Installers shall provide temporary bracing per BCSI. Unless noted otherwise, top chord shall have properly attached structural sheathing and bottom chord shall have a properly attached rigid ceiling. Locations shown for permanent lateral restraint of webs shall have continuous lateral restraint (CLR), installed with diagonal bracing installed on the CLR per BCSI sections B3, B7, or B10, as applicable. Apply plates to each face of truss and position as shown above and on the Joint Details, unless noted otherwise. Refer to drawings 160A-Z for standard plate positions. Refer to job's General Notes page for additional information.

Alpine, a division of ITW Building Components Group Inc. shall not be responsible for any deviation from this drawing, any failure to build the truss in conformance with ANSI/TPI 1, or for handling, shipping, installation and bracing of trusses. A seal on this drawing or cover page listing this drawing, indicates acceptance of professional engineering responsibility solely for the design shown. The suitability and use of this drawing for any structure is the responsibility of the Building Designer per ANSI/TPI 1 Sec.2.

For more information see these web sites: Alpine: alpineitw.com; TPI: tpinst.org; SBCA: sbcacomponents.com; ICC: iccsafe.org; AWC: awc.org

ALPINE AN ITW COMPANY
155 Harlem Ave
North Building, 4th Floor
Glenview, IL 60025

SEQN: 214653 / JACK FROM: RNB	Ply: 1 Qty: 1	**Job Number:** B59525R Perri Residence **Truss Label:** CJ13	Cust: R 857 JRef: 1Y2Y8570005 T31 / DrwNo: 247.24.1014.00254 SSB / DF 09/03/2024

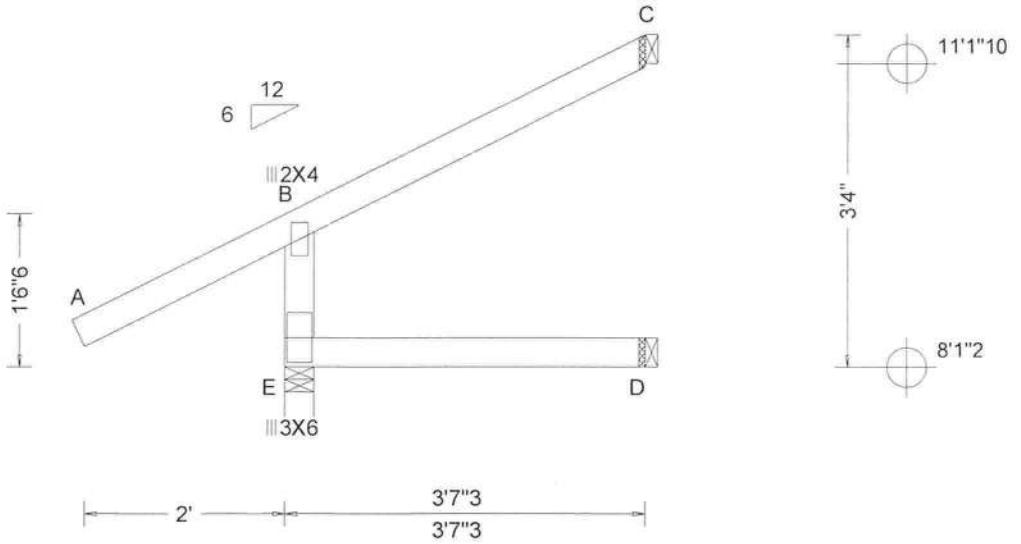

Loading Criteria (psf)	**Wind Criteria**	**Snow Criteria** (Pg,Pf in PSF)	**Defl/CSI Criteria**
TCLL: 20.00 TCDL: 7.00 BCLL: 0.00 BCDL: 10.00 Des Ld: 37.00 NCBCLL: 10.00 Soffit: 2.00 Load Duration: 1.25 Spacing: 24.0 "	Wind Std: ASCE 7-22 Speed: 130 mph Enclosure: Closed Risk Category: II EXP: B Kzt: NA Mean Height: 15.00 ft TCDL: 4.2 psf BCDL: 6.0 psf MWFRS Parallel Dist: h/2 to h C&C Dist a: 3.00 ft Loc. from endwall: not in 4.50 ft GCpi: 0.18 Wind Duration: 1.60	Pg: NA Ct: NA CAT: NA Pf: NA Ce: NA Lu: NA Cs: NA Snow Duration: NA Building Code: FBC 8th Ed. 2023 Res. TPI Std: 2014 Rep Fac: Yes FT/RT:20(0)/0(0) Plate Type(s): WAVE	PP Deflection in loc L/defl L/# VERT(LL): 0.000 B 999 360 VERT(CL): 0.001 B 999 240 HORZ(LL): -0.000 B - - HORZ(TL): 0.001 B - - Creep Factor: 2.0 Max TC CSI: 0.226 Max BC CSI: 0.107 Max Web CSI: 0.100 VIEW Ver: 23.02.01A.1204.18

▲ Maximum Reactions (lbs)

	Gravity			Non-Gravity		
Loc	R+	/ R-	/ Rh	/ Rw	/ U	/ RL
E	296	/-	/-	/216	/70	/-
D	72	/-	/-	/36	/-	/13
C	65	/-	/-	/33	/26	/89

Wind reactions based on MWFRS
E Brg Wid = 3.5 Min Req = 1.5 (Support)
D Brg Wid = 1.5 Min Req = -
C Brg Wid = 1.5 Min Req = -
Bearing E Fcperp = 425psi.
Members not listed have forces less than 375#

Lumber

Top chord: 2x4 SP #1;
Bot chord: 2x4 SP #1;
Webs: 2x4 SP #3;

Plating Notes

Plates sized for a minimum of 3.50 sq.in./piece.

Wind

Wind loads based on MWFRS with additional C&C member design.

Left end vertical not exposed to wind pressure.

Wind loading based on both gable and hip roof types.

DOUGLAS FLEMING
LICENSE
No. 66648
STATE OF
FLORIDA
PROFESSIONAL ENGINEER

COA #0 248
Florida Certificate of Product Approval #FL1999
09/04/2024

****WARNING**** READ AND FOLLOW ALL NOTES ON THIS DRAWING!
****IMPORTANT**** FURNISH THIS DRAWING TO ALL CONTRACTORS INCLUDING THE INSTALLERS

Trusses require extreme care in fabricating, handling, shipping, installing and bracing. Refer to and follow the latest edition of BCSI (Building Component Safety Information, by TPI and SBCA) for safety practices prior to performing these functions. Installers shall provide temporary bracing per BCSI. Unless noted otherwise, top chord shall have properly attached structural sheathing and bottom chord shall have a properly attached rigid ceiling. Locations shown for permanent lateral restraint of webs shall have continuous lateral restraint (CLR), installed with diagonal bracing installed on the CLR per BCSI sections B3, B7, or B10, as applicable. Apply plates to each face of truss and position as shown above and on the Joint Details, unless noted otherwise. Refer to drawings 160A-Z for standard plate positions. Refer to job's General Notes page for additional information.

Alpine, a division of ITW Building Components Group Inc. shall not be responsible for any deviation from this drawing, any failure to build the truss in conformance with ANSI/TPI 1, or for handling, shipping, installation and bracing of trusses. A seal on this drawing or cover page listing this drawing, indicates acceptance of professional engineering responsibility solely for the design shown. The suitability and use of this drawing for any structure is the responsibility of the Building Designer per ANSI/TPI 1 Sec.2.

For more information see these web sites: Alpine: alpineitw.com; TPI: tpinst.org; SBCA: sbcacomponents.com; ICC: iccsafe.org; AWC: awc.org

ALPINE
AN ITW COMPANY
155 Harlem Ave
North Building, 4th Floor
Glenview, IL 60025

SEQN: 214722 / JACK FROM: RNB	Ply: 1 Qty: 1	**Job Number:** B59525R Perri Residence **Truss Label:** CJ14	Cust: R 857 JRef: 1Y2Y8570005 T49 / DrwNo: 247.24.1013.59708 SSB / DF 09/03/2024

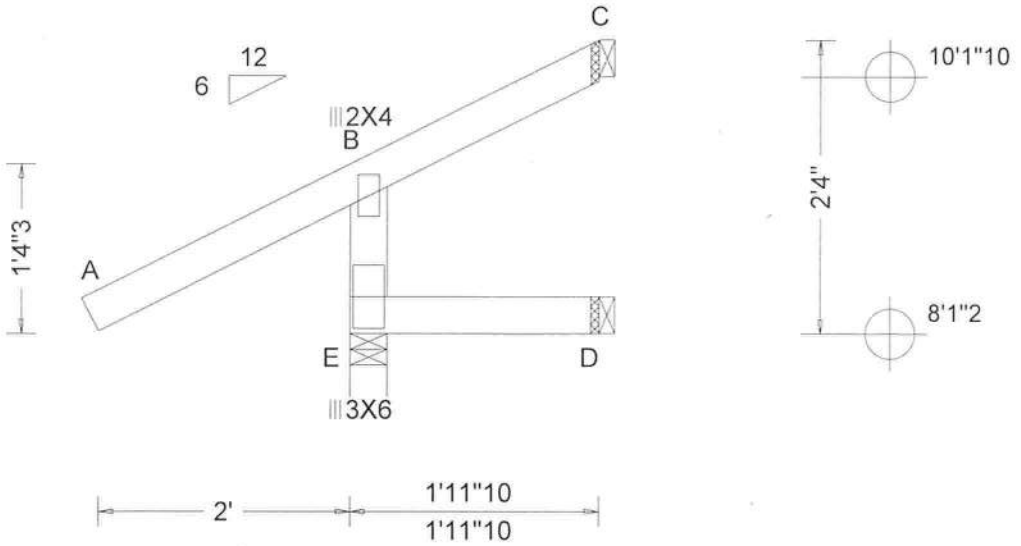

Loading Criteria (psf)

TCLL:	20.00
TCDL:	7.00
BCLL:	0.00
BCDL:	10.00
Des Ld:	37.00
NCBCLL:	10.00
Soffit:	2.00

Load Duration: 1.25
Spacing: 24.0 "

Wind Criteria
Wind Std: ASCE 7-22
Speed: 130 mph
Enclosure: Closed
Risk Category: II
EXP: B Kzt: NA
Mean Height: 15.00 ft
TCDL: 4.2 psf
BCDL: 6.0 psf
MWFRS Parallel Dist: 0 to h/2
C&C Dist a: 3.00 ft
Loc. from endwall: not in 4.50 ft
GCpi: 0.18
Wind Duration: 1.60

Snow Criteria (Pg,Pf in PSF)
Pg: NA Ct: NA CAT: NA
Pf: NA Ce: NA
Lu: NA Cs: NA
Snow Duration: NA

Building Code:
FBC 8th Ed. 2023 Res.
TPI Std: 2014
Rep Fac: Yes
FT/RT:20(0)/0(0)
Plate Type(s):
WAVE

Defl/CSI Criteria

PP Deflection in	loc	L/defl	L/#
VERT(LL): 0.000	B	999	360
VERT(CL): 0.000	B	999	240
HORZ(LL): 0.000	B	-	-
HORZ(TL): 0.000	B	-	-

Creep Factor: 2.0
Max TC CSI: 0.206
Max BC CSI: 0.029
Max Web CSI: 0.099

VIEW Ver: 23.02.01A.1204.18

▲ Maximum Reactions (lbs)

	Gravity			Non-Gravity		
Loc	R+	/ R-	/ Rh	/ Rw	/ U	/ RL
E	264	/-	/-	/200	/72	/-
D	39	/-	/-	/20	/-	/11
C	-	/-10	/-	/35	/55	/68

Wind reactions based on MWFRS
E Brg Wid = 3.5 Min Req = 1.5 (Support)
D Brg Wid = 1.5 Min Req = -
C Brg Wid = 1.5 Min Req = -
Bearing E Fcperp = 425psi.
Members not listed have forces less than 375#

Lumber

Top chord: 2x4 SP #1;
Bot chord: 2x4 SP #1;
Webs: 2x4 SP #3;

Plating Notes

Plates sized for a minimum of 3.50 sq.in./piece.

Wind

Wind loads based on MWFRS with additional C&C member design.

Left end vertical not exposed to wind pressure.

Wind loading based on both gable and hip roof types.

DOUGLAS FLEMING
LICENSE
No. 66648
STATE OF
FLORIDA
PROFESSIONAL ENGINEER

COA #0 278
Florida Certificate of Product Approval #FL1999
09/04/2024

WARNING READ AND FOLLOW ALL NOTES ON THIS DRAWING!
IMPORTANT FURNISH THIS DRAWING TO ALL CONTRACTORS INCLUDING THE INSTALLERS

Trusses require extreme care in fabricating, handling, shipping, installing and bracing. Refer to and follow the latest edition of BCSI (Building Component Safety Information, by TPI and SBCA) for safety practices prior to performing these functions. Installers shall provide temporary bracing per BCSI. Unless noted otherwise, top chord shall have properly attached structural sheathing and bottom chord shall have a properly attached rigid ceiling. Locations shown for permanent lateral restraint of webs shall have continuous lateral restraint (CLR), installed with diagonal bracing installed on the CLR per BCSI sections B3, B7, or B10, as applicable. Apply plates to each face of truss and position as shown above and on the Joint Details, unless noted otherwise. Refer to drawings 160A-Z for standard plate positions. Refer to job's General Notes page for additional information.

Alpine, a division of ITW Building Components Group Inc. shall not be responsible for any deviation from this drawing, any failure to build the truss in conformance with ANSI/TPI 1, or for handling, shipping, installation and bracing of trusses. A seal on this drawing or cover page listing this drawing, indicates acceptance of professional engineering responsibility solely for the design shown. The suitability and use of this drawing for any structure is the responsibility of the Building Designer per ANSI/TPI 1 Sec.2.

For more information see these web sites: Alpine: alpineitw.com; TPI: tpinst.org; SBCA: sbcacomponents.com; ICC: iccsafe.org; AWC: awc.org

ALPINE AN ITW COMPANY
155 Harlem Ave
North Building, 4th Floor
Glenview, IL 60025

SEQN: 214724 / JACK FROM: RNB	Ply: 1 Qty: 1	**Job Number:** B59525R Perri Residence **Truss Label:** CJ15	Cust: R 857 JRef:1Y2Y8570005 T23 / DrwNo: 247.24.1013.58146 SSB / DF 09/03/2024

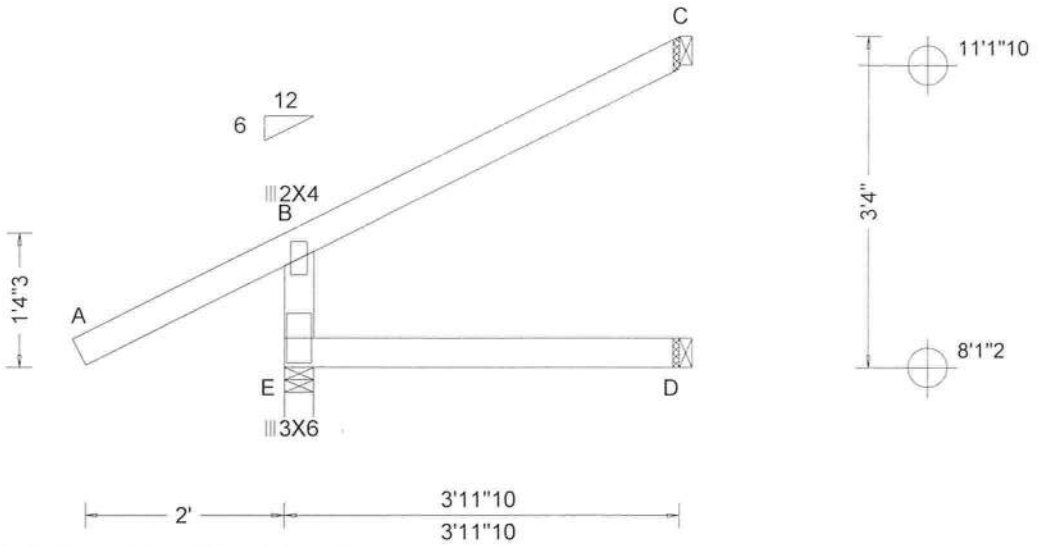

Loading Criteria (psf)	**Wind Criteria**	**Snow Criteria** (Pg,Pf in PSF)	**Defl/CSI Criteria**
TCLL: 20.00	Wind Std: ASCE 7-22	Pg: NA Ct: NA CAT: NA	PP Deflection in loc L/defl L/#
TCDL: 7.00	Speed: 130 mph	Pf: NA Ce: NA	VERT(LL): 0.000 B 999 360
BCLL: 0.00	Enclosure: Closed	Lu: NA Cs: NA	VERT(CL): 0.000 B 999 240
BCDL: 10.00	Risk Category: II	Snow Duration: NA	HORZ(LL): -0.000 B - -
Des Ld: 37.00	EXP: B Kzt: NA		HORZ(TL): 0.001 B - -
NCBCLL: 10.00	Mean Height: 15.00 ft	Building Code:	Creep Factor: 2.0
Soffit: 2.00	TCDL: 4.2 psf	FBC 8th Ed. 2023 Res.	Max TC CSI: 0.229
Load Duration: 1.25	BCDL: 6.0 psf	TPI Std: 2014	Max BC CSI: 0.133
Spacing: 24.0 "	MWFRS Parallel Dist: h/2 to h	Rep Fac: Yes	Max Web CSI: 0.098
	C&C Dist a: 3.00 ft	FT/RT:20(0)/0(0)	
	Loc. from endwall: not in 4.50 ft	Plate Type(s):	
	GCpi: 0.18	WAVE	VIEW Ver: 23.02.01A.1204.18
	Wind Duration: 1.60		

▲ Maximum Reactions (lbs)

	Gravity			Non-Gravity		
Loc	R+	/ R-	/ Rh	/ Rw	/ U	/ RL
E	307	/-	/-	/221	/70	/-
D	79	/-	/-	/40	/-	/11
C	78	/-	/-	/36	/22	/92

Wind reactions based on MWFRS
E Brg Wid = 3.5 Min Req = 1.5 (Support)
D Brg Wid = 1.5 Min Req = -
C Brg Wid = 1.5 Min Req = -
Bearing E Fcperp = 425psi.
Members not listed have forces less than 375#

Lumber

Top chord: 2x4 SP #1;
Bot chord: 2x4 SP #1;
Webs: 2x4 SP #3;

Plating Notes

Plates sized for a minimum of 3.50 sq.in./piece.

Wind

Wind loads based on MWFRS with additional C&C member design.

Left end vertical not exposed to wind pressure.

Wind loading based on both gable and hip roof types.

DOUGLAS FLEMING
LICENSE
No. 66648
STATE OF
FLORIDA
PROFESSIONAL ENGINEER

COA #0 278
Florida Certificate of Product Approval #FL1999
09/04/2024

****WARNING**** READ AND FOLLOW ALL NOTES ON THIS DRAWING!
****IMPORTANT**** FURNISH THIS DRAWING TO ALL CONTRACTORS INCLUDING THE INSTALLERS

Trusses require extreme care in fabricating, handling, shipping, installing and bracing. Refer to and follow the latest edition of BCSI (Building Component Safety Information, by TPI and SBCA) for safety practices prior to performing these functions. Installers shall provide temporary bracing per BCSI. Unless noted otherwise, top chord shall have properly attached structural sheathing and bottom chord shall have a properly attached rigid ceiling. Locations shown for permanent lateral restraint of webs shall have continuous lateral restraint (CLR), installed with diagonal bracing installed on the CLR per BCSI sections B3, B7, or B10, as applicable. Apply plates to each face of truss and position as shown above and on the Joint Details, unless noted otherwise. Refer to drawings 160A-Z for standard plate positions. Refer to job's General Notes page for additional information.

Alpine, a division of ITW Building Components Group Inc. shall not be responsible for any deviation from this drawing, any failure to build the truss in conformance with ANSI/TPI 1, or for handling, shipping, installation and bracing of trusses. A seal on this drawing or cover page listing this drawing, indicates acceptance of professional engineering responsibility solely for the design shown. The suitability and use of this drawing for any structure is the responsibility of the Building Designer per ANSI/TPI 1 Sec.2.

For more information see these web sites: Alpine: alpineitw.com; TPI: tpinst.org; SBCA: sbcacomponents.com; ICC: iccsafe.org; AWC: awc.org

ALPINE
AN ITW COMPANY
155 Harlem Ave
North Building, 4th Floor
Glenview, IL 60025

SEQN: 214772 / JACK FROM: RNB	Ply: 1 Qty: 2	**Job Number:** B59525R Perri Residence **Truss Label:** CJ16	Cust: R 857 JRef: 1Y2Y8570005 T34 / DrwNo: 247.24.1013.59348 SSB / DF 09/03/2024

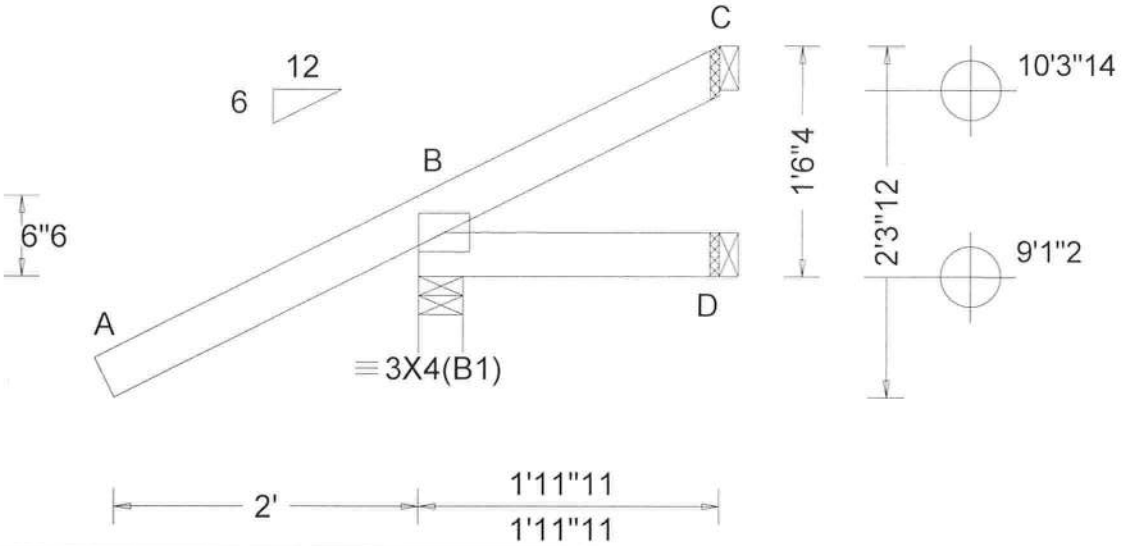

Loading Criteria (psf)	**Wind Criteria**	**Snow Criteria** (Pg,Pf in PSF)	**Defl/CSI Criteria**
TCLL: 20.00 TCDL: 7.00 BCLL: 0.00 BCDL: 10.00 Des Ld: 37.00 NCBCLL: 10.00 Soffit: 2.00 Load Duration: 1.25 Spacing: 24.0 "	Wind Std: ASCE 7-22 Speed: 130 mph Enclosure: Closed Risk Category: II EXP: B Kzt: NA Mean Height: 15.00 ft TCDL: 4.2 psf BCDL: 6.0 psf MWFRS Parallel Dist: 0 to h/2 C&C Dist a: 3.00 ft Loc. from endwall: Any GCpi: 0.18 Wind Duration: 1.60	Pg: NA Ct: NA CAT: NA Pf: NA Ce: NA Lu: NA Cs: NA Snow Duration: NA Building Code: FBC 8th Ed. 2023 Res. TPI Std: 2014 Rep Fac: Yes FT/RT:20(0)/0(0) Plate Type(s): WAVE	PP Deflection in loc L/defl L/# VERT(LL): NA VERT(CL): NA HORZ(LL): -0.001 C - - HORZ(TL): 0.002 C - - Creep Factor: 2.0 Max TC CSI: 0.259 Max BC CSI: 0.039 Max Web CSI: 0.000 VIEW Ver: 23.02.01A.1204.18

▲ Maximum Reactions (lbs)

Loc	Gravity R+	Gravity / R-	Gravity / Rh	Non-Gravity / Rw	Non-Gravity / U	Non-Gravity / RL
B	276	/-	/-	/171	/36	/43
D	32	/-	/-	/16	/-	/-
C	-	/-7	/-	/25	/25	/-

Wind reactions based on MWFRS
B Brg Wid = 3.5 Min Req = 1.5 (Support)
D Brg Wid = 1.5 Min Req = -
C Brg Wid = 1.5 Min Req = -
Bearing B Fcperp = 425psi.
Members not listed have forces less than 375#

Lumber

Top chord: 2x4 SP #1;
Bot chord: 2x4 SP #1;

Plating Notes

Plates sized for a minimum of 3.50 sq.in./piece.

Wind

Wind loads based on MWFRS with additional C&C member design.

Wind loading based on both gable and hip roof types.

DOUGLAS FLEMING
LICENSE
No. 66648
STATE OF
FLORIDA
PROFESSIONAL ENGINEER

COA #0 278
Florida Certificate of Product Approval #FL1999
09/04/2024

****WARNING**** READ AND FOLLOW ALL NOTES ON THIS DRAWING!
****IMPORTANT**** FURNISH THIS DRAWING TO ALL CONTRACTORS INCLUDING THE INSTALLERS

Trusses require extreme care in fabricating, handling, shipping, installing and bracing. Refer to and follow the latest edition of BCSI (Building Component Safety Information, by TPI and SBCA) for safety practices prior to performing these functions. Installers shall provide temporary bracing per BCSI. Unless noted otherwise, top chord shall have properly attached structural sheathing and bottom chord shall have a properly attached rigid ceiling. Locations shown for permanent lateral restraint of webs shall have continuous lateral restraint (CLR), installed with diagonal bracing installed on the CLR per BCSI sections B3, B7, or B10, as applicable. Apply plates to each face of truss and position as shown above and on the Joint Details, unless noted otherwise. Refer to drawings 160A-Z for standard plate positions. Refer to job's General Notes page for additional information.

Alpine, a division of ITW Building Components Group Inc. shall not be responsible for any deviation from this drawing, any failure to build the truss in conformance with ANSI/TPI 1, or for handling, shipping, installation and bracing of trusses. A seal on this drawing or cover page listing this drawing, indicates acceptance of professional engineering responsibility solely for the design shown. The suitability and use of this drawing for any structure is the responsibility of the Building Designer per ANSI/TPI 1 Sec.2.

For more information see these web sites: Alpine: alpineitw.com; TPI: tpinst.org; SBCA: sbcacomponents.com; ICC: iccsafe.org; AWC: awc.org

ALPINE
AN ITW COMPANY
155 Harlem Ave
North Building, 4th Floor
Glenview, IL 60025

SEQN: 214558 / JACK FROM: RNB	Ply: 1 Qty: 1	**Job Number:** B59525R Perri Residence **Truss Label:** CJ17	Cust: R 857 JRef: 1Y2Y8570005 T51 / DrwNo: 247.24.1014.00411 SSB / DF 09/03/2024

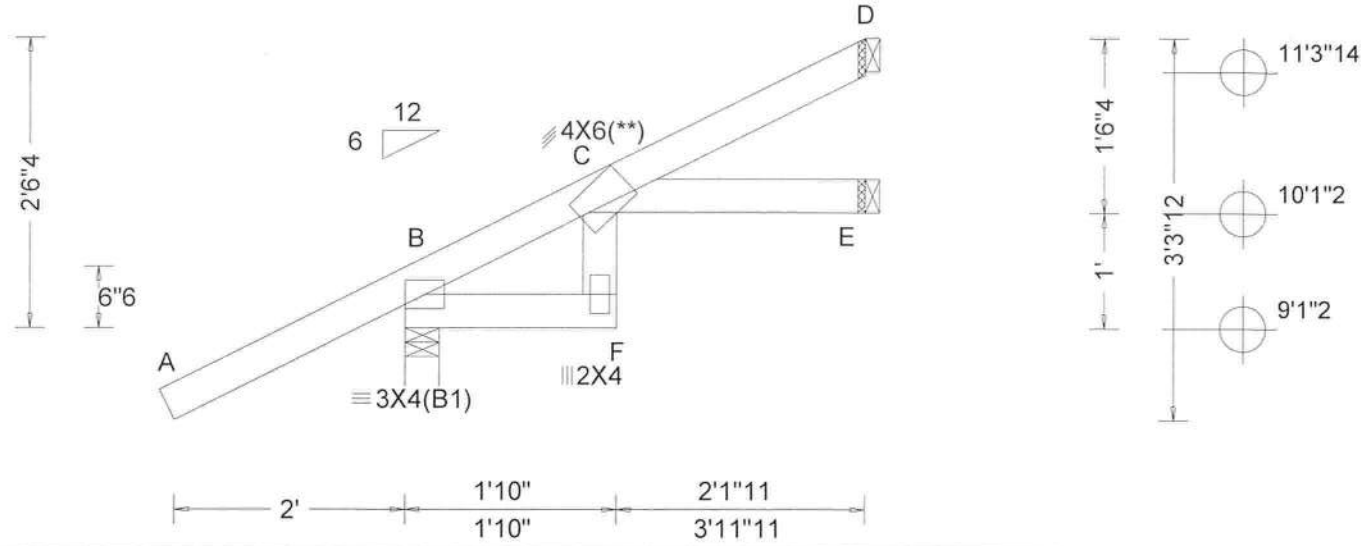

Loading Criteria (psf)	**Wind Criteria**	**Snow Criteria** (Pg,Pf in PSF)	**Defl/CSI Criteria**
TCLL: 20.00 TCDL: 7.00 BCLL: 0.00 BCDL: 10.00 Des Ld: 37.00 NCBCLL: 10.00 Soffit: 2.00 Load Duration: 1.25 Spacing: 24.0 "	Wind Std: ASCE 7-22 Speed: 130 mph Enclosure: Closed Risk Category: II EXP: B Kzt: NA Mean Height: 15.00 ft TCDL: 4.2 psf BCDL: 6.0 psf MWFRS Parallel Dist: 0 to h/2 C&C Dist a: 3.00 ft Loc. from endwall: not in 4.50 ft GCpi: 0.18 Wind Duration: 1.60	Pg: NA Ct: NA CAT: NA Pf: NA Ce: NA Lu: NA Cs: NA Snow Duration: NA Building Code: FBC 8th Ed. 2023 Res. TPI Std: 2014 Rep Fac: Yes FT/RT:20(0)/0(0) Plate Type(s): WAVE	PP Deflection in loc L/defl L/# VERT(LL): 0.011 F 999 360 VERT(CL): 0.025 F 999 240 HORZ(LL): 0.005 C - - HORZ(TL): 0.012 C - - Creep Factor: 2.0 Max TC CSI: 0.219 Max BC CSI: 0.049 Max Web CSI: 0.029 VIEW Ver: 23.02.01A.1204.18

▲ Maximum Reactions (lbs)

	Gravity			Non-Gravity		
Loc	R+	/ R-	/ Rh	/ Rw	/ U	/ RL
B	313	/-	/-	/187	/20	/67
E	51	/-	/-	/26	/-	/-
D	84	/-	/-	/42	/24	/-

Wind reactions based on MWFRS
B Brg Wid = 3.5 Min Req = 1.5 (Support)
E Brg Wid = 1.5 Min Req = -
D Brg Wid = 1.5 Min Req = -
Bearing B Fcperp = 425psi.
Members not listed have forces less than 375#

Lumber

Top chord: 2x4 SP #1;
Bot chord: 2x4 SP #1;
Webs: 2x4 SP #3;

Plating Notes

(**) 1 plate(s) require special positioning. Refer to scaled plate plot details for special positioning requirements.

Plates sized for a minimum of 3.50 sq.in./piece.

Wind

Wind loads based on MWFRS with additional C&C member design.

Wind loading based on both gable and hip roof types.

DOUGLAS FLEMING
LICENSE
No. 66648
STATE OF
FLORIDA
PROFESSIONAL ENGINEER

COA #0 248
Florida Certificate of Product Approval #FL1999
09/04/2024

****WARNING**** READ AND FOLLOW ALL NOTES ON THIS DRAWING!
****IMPORTANT**** FURNISH THIS DRAWING TO ALL CONTRACTORS INCLUDING THE INSTALLERS

Trusses require extreme care in fabricating, handling, shipping, installing and bracing. Refer to and follow the latest edition of BCSI (Building Component Safety Information, by TPI and SBCA) for safety practices prior to performing these functions. Installers shall provide temporary bracing per BCSI. Unless noted otherwise, top chord shall have properly attached structural sheathing and bottom chord shall have a properly attached rigid ceiling. Locations shown for permanent lateral restraint of webs shall have continuous lateral restraint (CLR), installed with diagonal bracing installed on the CLR per BCSI sections B3, B7, or B10, as applicable. Apply plates to each face of truss and position as shown above and on the Joint Details, unless noted otherwise. Refer to drawings 160A-Z for standard plate positions. Refer to job's General Notes page for additional information.

Alpine, a division of ITW Building Components Group Inc. shall not be responsible for any deviation from this drawing, any failure to build the truss in conformance with ANSI/TPI 1, or for handling, shipping, installation and bracing of trusses. A seal on this drawing or cover page listing this drawing, indicates acceptance of professional engineering responsibility solely for the design shown. The suitability and use of this drawing for any structure is the responsibility of the Building Designer per ANSI/TPI 1 Sec.2.

For more information see these web sites: Alpine: alpineitw.com; TPI: tpinst.org; SBCA: sbcacomponents.com; ICC: iccsafe.org; AWC: awc.org

ALPINE
AN ITW COMPANY
155 Harlem Ave
North Building, 4th Floor
Glenview, IL 60025

SEQN: 214560 / JACK FROM: RNB	Ply: 1 Qty: 1	**Job Number:** B59525R Perri Residence **Truss Label:** CJ18	Cust: R 857 JRef: 1Y2Y8570005 T21 / DrwNo: 247.24.1014.00691 SSB / DF 09/03/2024

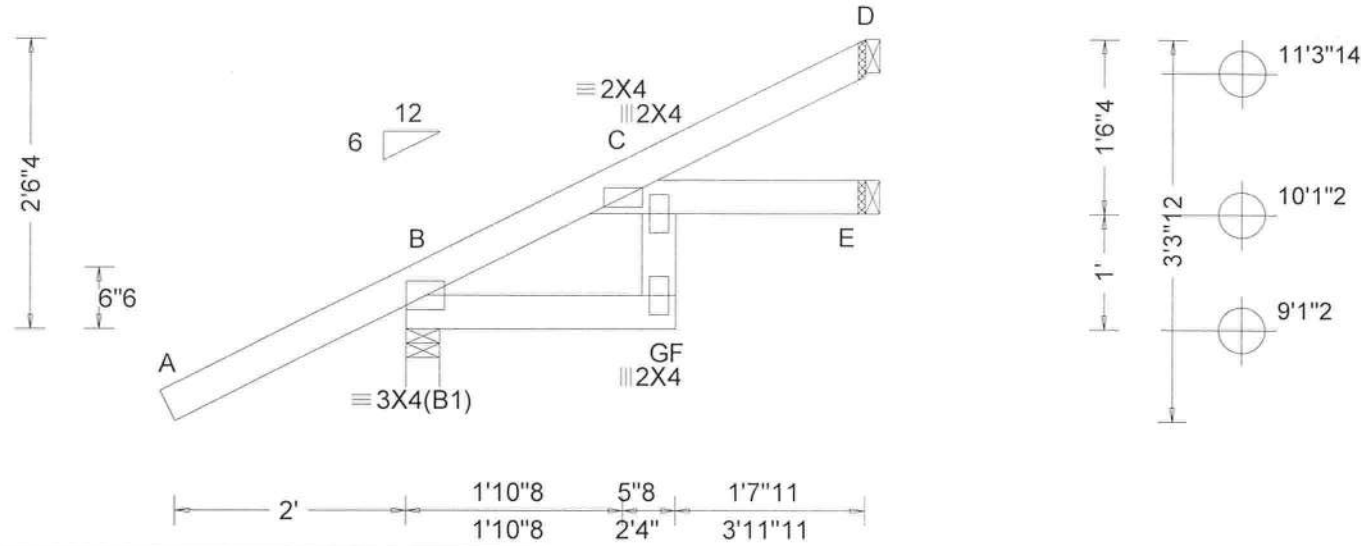

Loading Criteria (psf)

TCLL:	20.00
TCDL:	7.00
BCLL:	0.00
BCDL:	10.00
Des Ld:	37.00
NCBCLL:	10.00
Soffit:	2.00

Load Duration: 1.25
Spacing: 24.0 "

Wind Criteria
Wind Std: ASCE 7-22
Speed: 130 mph
Enclosure: Closed
Risk Category: II
EXP: B Kzt: NA
Mean Height: 15.00 ft
TCDL: 4.2 psf
BCDL: 6.0 psf
MWFRS Parallel Dist: 0 to h/2
C&C Dist a: 3.00 ft
Loc. from endwall: not in 4.50 ft
GCpi: 0.18
Wind Duration: 1.60

Snow Criteria (Pg,Pf in PSF)
Pg: NA Ct: NA CAT: NA
Pf: NA Ce: NA
Lu: NA Cs: NA
Snow Duration: NA

Building Code:
FBC 8th Ed. 2023 Res.
TPI Std: 2014
Rep Fac: Yes
FT/RT:20(0)/0(0)
Plate Type(s):
WAVE

Defl/CSI Criteria

PP Deflection in	loc	L/defl	L/#
VERT(LL): 0.010	C	999	360
VERT(CL): 0.019	F	999	240
HORZ(LL): 0.005	G	-	-
HORZ(TL): 0.010	G	-	-

Creep Factor: 2.0
Max TC CSI: 0.219
Max BC CSI: 0.060
Max Web CSI: 0.042

VIEW Ver: 23.02.01A.1204.18

▲ Maximum Reactions (lbs)

	Gravity			Non-Gravity		
Loc	R+	/ R-	/ Rh	/ Rw	/ U	/ RL
B	313	/-	/-	/187	/20	/67
E	53	/-	/-	/29	/-	/-
D	82	/-	/-	/41	/23	/-

Wind reactions based on MWFRS
B Brg Wid = 3.5 Min Req = 1.5 (Support)
E Brg Wid = 1.5 Min Req = -
D Brg Wid = 1.5 Min Req = -
Bearing B Fcperp = 425psi.
Members not listed have forces less than 375#

Lumber
Top chord: 2x4 SP #1;
Bot chord: 2x4 SP #1;
Webs: 2x4 SP #3;

Plating Notes
Plates sized for a minimum of 3.50 sq.in./piece.

Wind
Wind loads based on MWFRS with additional C&C member design.
Wind loading based on both gable and hip roof types.

DOUGLAS FLEMING
LICENSE
No. 66648
STATE OF
FLORIDA
PROFESSIONAL ENGINEER

COA #0 278
Florida Certificate of Product Approval #FL1999
09/04/2024

WARNING READ AND FOLLOW ALL NOTES ON THIS DRAWING!
IMPORTANT FURNISH THIS DRAWING TO ALL CONTRACTORS INCLUDING THE INSTALLERS
Trusses require extreme care in fabricating, handling, shipping, installing and bracing. Refer to and follow the latest edition of BCSI (Building Component Safety Information, by TPI and SBCA) for safety practices prior to performing these functions. Installers shall provide temporary bracing per BCSI. Unless noted otherwise, top chord shall have properly attached structural sheathing and bottom chord shall have a properly attached rigid ceiling. Locations shown for permanent lateral restraint of webs shall have continuous lateral restraint (CLR), installed with diagonal bracing installed on the CLR per BCSI sections B3, B7, or B10, as applicable. Apply plates to each face of truss and position as shown above and on the Joint Details, unless noted otherwise. Refer to drawings 160A-Z for standard plate positions. Refer to job's General Notes page for additional information.
Alpine, a division of ITW Building Components Group Inc. shall not be responsible for any deviation from this drawing, any failure to build the truss in conformance with ANSI/TPI 1, or for handling, shipping, installation and bracing of trusses. A seal on this drawing or cover page listing this drawing, indicates acceptance of professional engineering responsibility solely for the design shown. The suitability and use of this drawing for any structure is the responsibility of the Building Designer per ANSI/TPI 1 Sec.2.
For more information see these web sites: Alpine: alpineitw.com; TPI: tpinst.org; SBCA: sbcacomponents.com; ICC: iccsafe.org; AWC: awc.org

ALPINE
AN ITW COMPANY
155 Harlem Ave
North Building, 4th Floor
Glenview, IL 60025

SEQN: 214565 / JACK FROM: RNB	Ply: 1 Qty: 1	**Job Number:** B59525R Perri Residence **Truss Label:** CJ19	Cust: R 857 JRef: 1Y2Y8570005 T48 / DrwNo: 247.24.1014.00326 SSB / DF 09/03/2024

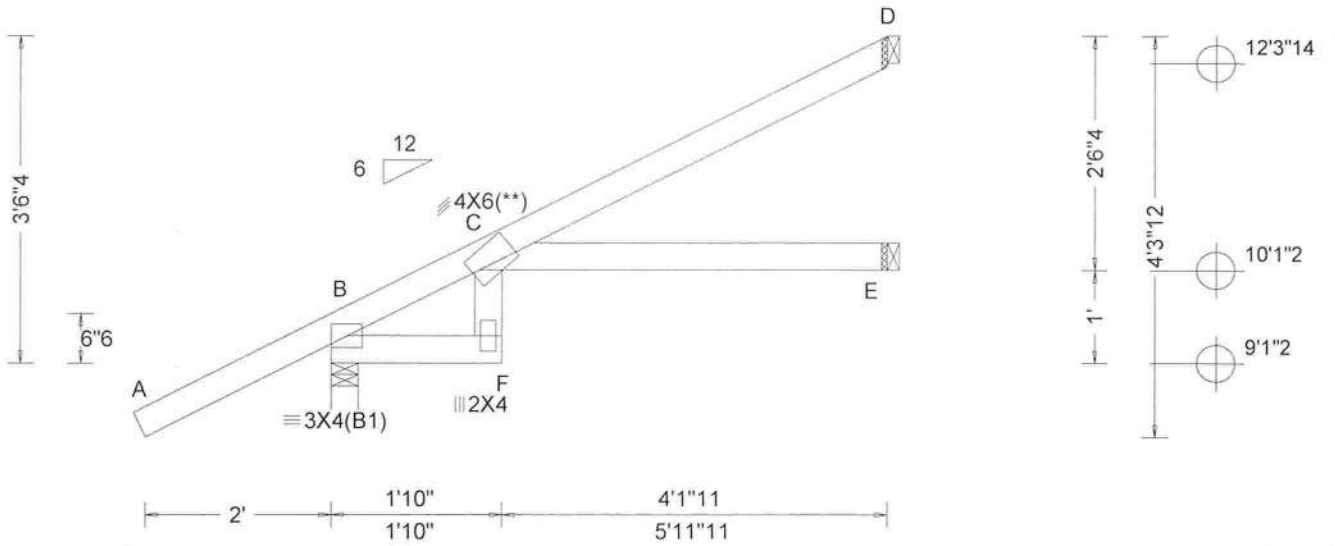

Loading Criteria (psf)	**Wind Criteria**	**Snow Criteria** (Pg,Pf in PSF)	**Defl/CSI Criteria**
TCLL: 20.00	Wind Std: ASCE 7-22	Pg: NA Ct: NA CAT: NA	PP Deflection in loc L/defl L/#
TCDL: 7.00	Speed: 130 mph	Pf: NA Ce: NA	VERT(LL): 0.071 F 999 360
BCLL: 0.00	Enclosure: Closed	Lu: NA Cs: NA	VERT(CL): 0.126 F 559 240
BCDL: 10.00	Risk Category: II	Snow Duration: NA	HORZ(LL): 0.035 C - -
Des Ld: 37.00	EXP: B Kzt: NA		HORZ(TL): 0.062 C - -
NCBCLL: 10.00	Mean Height: 15.00 ft	Building Code:	Creep Factor: 2.0
Soffit: 2.00	TCDL: 4.2 psf	FBC 8th Ed. 2023 Res.	Max TC CSI: 0.370
Load Duration: 1.25	BCDL: 6.0 psf	TPI Std: 2014	Max BC CSI: 0.180
Spacing: 24.0 "	MWFRS Parallel Dist: > 2h	Rep Fac: Yes	Max Web CSI: 0.017
	C&C Dist a: 3.00 ft	FT/RT:20(0)/0(0)	
	Loc. from endwall: not in 9.00 ft	Plate Type(s):	
	GCpi: 0.18	WAVE	VIEW Ver: 23.02.01A.1204.18
	Wind Duration: 1.60		

▲ Maximum Reactions (lbs)

	Gravity			Non-Gravity		
Loc	R+	/ R-	/ Rh	/ Rw	/ U	/ RL
B	377	/-	/-	/221	/-	/65
E	92	/-	/-	/48	/-	/-
D	147	/-	/-	/74	/25	/-

Wind reactions based on MWFRS
B Brg Wid = 3.5 Min Req = 1.5 (Support)
E Brg Wid = 1.5 Min Req = -
D Brg Wid = 1.5 Min Req = -
Bearing B Fcperp = 425psi.
Members not listed have forces less than 375#

Lumber

Top chord: 2x4 SP #1;
Bot chord: 2x4 SP #1;
Webs: 2x4 SP #3;

Plating Notes

Plates extending outside the truss perimeter shall be positioned within the tolerance specified on the plate placement polygon only, without use of TPI 1-2007 section 3.7.2.2 alternate positioning. Steel extending above the top chord or below the bottom chord may be trimmed or folded along the outer edge of that chord. Steel extending elsewhere beyond outermost truss members may be folded.

(**) 1 plate(s) require special positioning. Refer to scaled plate plot details for special positioning requirements.

Plates sized for a minimum of 3.50 sq.in./piece.

Wind

Wind loads based on MWFRS with additional C&C member design.

Wind loading based on both gable and hip roof types.

DOUGLAS FLEMING
LICENSE
No. 66648
STATE OF
FLORIDA
PROFESSIONAL ENGINEER

COA #0 278
Florida Certificate of Product Approval #FL1999
09/04/2024

WARNING READ AND FOLLOW ALL NOTES ON THIS DRAWING!
IMPORTANT FURNISH THIS DRAWING TO ALL CONTRACTORS INCLUDING THE INSTALLERS

Trusses require extreme care in fabricating, handling, shipping, installing and bracing. Refer to and follow the latest edition of BCSI (Building Component Safety Information, by TPI and SBCA) for safety practices prior to performing these functions. Installers shall provide temporary bracing per BCSI. Unless noted otherwise, top chord shall have properly attached structural sheathing and bottom chord shall have a properly attached rigid ceiling. Locations shown for permanent lateral restraint of webs shall have continuous lateral restraint (CLR), installed with diagonal bracing installed on the CLR per BCSI sections B3, B7, or B10, as applicable. Apply plates to each face of truss and position as shown above and on the Joint Details, unless noted otherwise. Refer to drawings 160A-Z for standard plate positions. Refer to job's General Notes page for additional information.

Alpine, a division of ITW Building Components Group Inc. shall not be responsible for any deviation from this drawing, any failure to build the truss in conformance with ANSI/TPI 1, or for handling, shipping, installation and bracing of trusses. A seal on this drawing or cover page listing this drawing, indicates acceptance of professional engineering responsibility solely for the design shown. The suitability and use of this drawing for any structure is the responsibility of the Building Designer per ANSI/TPI 1 Sec.2.

For more information see these web sites: Alpine: alpineitw.com; TPI: tpinst.org; SBCA: sbcacomponents.com; ICC: iccsafe.org; AWC: awc.org

ALPINE
AN ITW COMPANY
155 Harlem Ave
North Building, 4th Floor
Glenview, IL 60025

SEQN: 214562 / JACK FROM: RNB	Ply: 1 Qty: 1	**Job Number:** B59525R Perri Residence **Truss Label:** CJ20	Cust: R 857 JRef: 1Y2Y8570005 T39 / DrwNo: 247.24.1013.59067 SSB / DF 09/03/2024

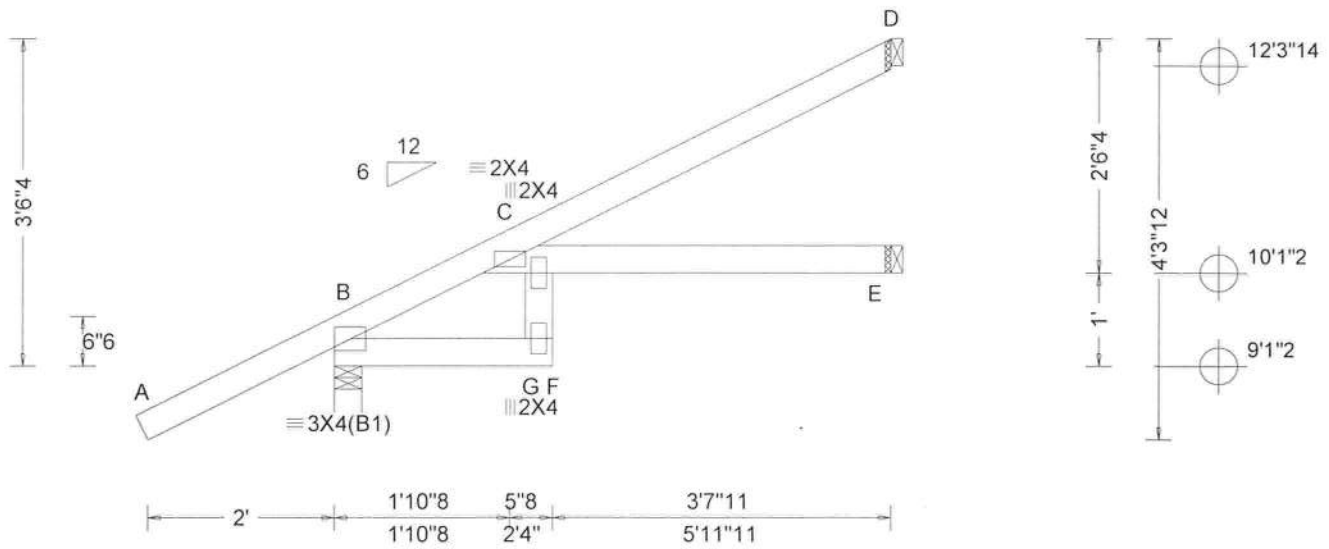

Loading Criteria (psf)

TCLL:	20.00
TCDL:	7.00
BCLL:	0.00
BCDL:	10.00
Des Ld:	37.00
NCBCLL:	10.00
Soffit:	2.00

Load Duration: 1.25
Spacing: 24.0 "

Wind Criteria
Wind Std: ASCE 7-22
Speed: 130 mph
Enclosure: Closed
Risk Category: II
EXP: B Kzt: NA
Mean Height: 15.00 ft
TCDL: 4.2 psf
BCDL: 6.0 psf
MWFRS Parallel Dist: h/2 to h
C&C Dist a: 3.00 ft
Loc. from endwall: not in 4.50 ft
GCpi: 0.18
Wind Duration: 1.60

Snow Criteria (Pg,Pf in PSF)
Pg: NA Ct: NA CAT: NA
Pf: NA Ce: NA
Lu: NA Cs: NA
Snow Duration: NA

Building Code:
FBC 8th Ed. 2023 Res.
TPI Std: 2014
Rep Fac: Yes
FT/RT:20(0)/0(0)
Plate Type(s):
WAVE

Defl/CSI Criteria

PP Deflection in	loc	L/defl	L/#
VERT(LL): 0.065	F	999	360
VERT(CL): 0.117	F	603	240
HORZ(LL): 0.034	C	-	-
HORZ(TL): 0.061	C	-	-

Creep Factor: 2.0
Max TC CSI: 0.344
Max BC CSI: 0.198
Max Web CSI: 0.118

VIEW Ver: 23.02.01A.1204.18

▲ Maximum Reactions (lbs)

	Gravity			Non-Gravity		
Loc	R+	/ R-	/ Rh	/ Rw	/ U	/ RL
B	377	/-	/-	/221	/14	/91
E	93	/-	/-	/50	/-	/-
D	142	/-	/-	/72	/42	/-

Wind reactions based on MWFRS
B Brg Wid = 3.5 Min Req = 1.5 (Support)
E Brg Wid = 1.5 Min Req = -
D Brg Wid = 1.5 Min Req = -
Bearing B Fcperp = 425psi.
Members not listed have forces less than 375#

Lumber

Top chord: 2x4 SP #1;
Bot chord: 2x4 SP #1;
Webs: 2x4 SP #3;

Plating Notes

Plates sized for a minimum of 3.50 sq.in./piece.

Wind

Wind loads based on MWFRS with additional C&C member design.

Wind loading based on both gable and hip roof types.

DOUGLAS FLEMING
LICENSE
No. 66648
STATE OF
FLORIDA
PROFESSIONAL ENGINEER

COA #0 278
Florida Certificate of Product Approval #FL1999
09/04/2024

****WARNING**** READ AND FOLLOW ALL NOTES ON THIS DRAWING!
****IMPORTANT**** FURNISH THIS DRAWING TO ALL CONTRACTORS INCLUDING THE INSTALLERS
Trusses require extreme care in fabricating, handling, shipping, installing and bracing. Refer to and follow the latest edition of BCSI (Building Component Safety Information, by TPI and SBCA) for safety practices prior to performing these functions. Installers shall provide temporary bracing per BCSI. Unless noted otherwise, top chord shall have properly attached structural sheathing and bottom chord shall have a properly attached rigid ceiling. Locations shown for permanent lateral restraint of webs shall have continuous lateral restraint (CLR), installed with diagonal bracing installed on the CLR per BCSI sections B3, B7, or B10, as applicable. Apply plates to each face of truss and position as shown above and on the Joint Details, unless noted otherwise. Refer to drawings 160A-Z for standard plate positions. Refer to job's General Notes page for additional information.
Alpine, a division of ITW Building Components Group Inc. shall not be responsible for any deviation from this drawing, any failure to build the truss in conformance with ANSI/TPI 1, or for handling, shipping, installation and bracing of trusses. A seal on this drawing or cover page listing this drawing, indicates acceptance of professional engineering responsibility solely for the design shown. The suitability and use of this drawing for any structure is the responsibility of the Building Designer per ANSI/TPI 1 Sec.2.
For more information see these web sites: Alpine: alpineitw.com; TPI: tpinst.org; SBCA: sbcacomponents.com; ICC: iccsafe.org; AWC: awc.org

ALPINE
AN ITW COMPANY
155 Harlem Ave
North Building, 4th Floor
Glenview, IL 60025

SEQN: 214624 / EJAC FROM: RNB	Ply: 1 Qty: 31	**Job Number:** B59525R Perri Residence **Truss Label:** EJ5	Cust: R 857 JRef:1Y2Y8570005 T13 / DrwNo: 247.24.1014.00488 SSB / DF 09/03/2024

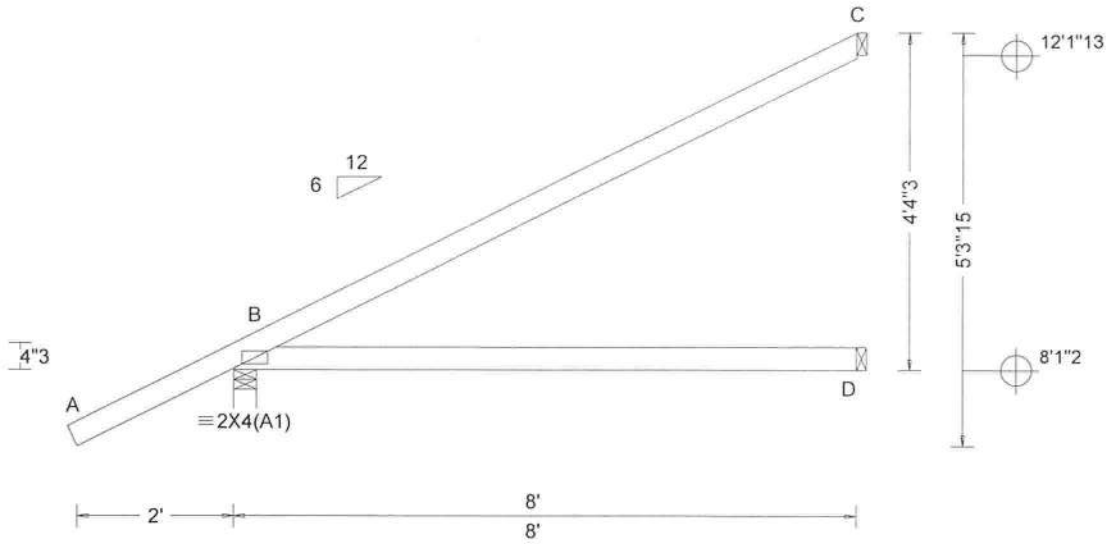

Loading Criteria (psf)	**Wind Criteria**	**Snow Criteria** (Pg,Pf in PSF)	**Defl/CSI Criteria**
TCLL: 20.00 TCDL: 7.00 BCLL: 0.00 BCDL: 10.00 Des Ld: 37.00 NCBCLL: 10.00 Soffit: 2.00 Load Duration: 1.25 Spacing: 24.0 "	Wind Std: ASCE 7-22 Speed: 130 mph Enclosure: Closed Risk Category: II EXP: B Kzt: NA Mean Height: 15.00 ft TCDL: 4.2 psf BCDL: 6.0 psf MWFRS Parallel Dist: 0 to h/2 C&C Dist a: 3.00 ft Loc. from endwall: not in 4.50 ft GCpi: 0.18 Wind Duration: 1.60	Pg: NA Ct: NA CAT: NA Pf: NA Ce: NA Lu: NA Cs: NA Snow Duration: NA Building Code: FBC 8th Ed. 2023 Res. TPI Std: 2014 Rep Fac: Yes FT/RT:20(0)/0(0) Plate Type(s): WAVE	PP Deflection in loc L/defl L/# VERT(LL): NA VERT(CL): NA HORZ(LL): 0.017 B - - HORZ(TL): 0.031 B - - Creep Factor: 2.0 Max TC CSI: 0.617 Max BC CSI: 0.470 Max Web CSI: 0.000 VIEW Ver: 23.02.01A.1204.18

▲ Maximum Reactions (lbs)

	Gravity			Non-Gravity		
Loc	R+	/ R-	/ Rh	/ Rw	/ U	/ RL
B	451	/-	/-	/263	/10	/115
D	144	/-	/-	/77	/-	/-
C	190	/-	/-	/94	/63	/-

Wind reactions based on MWFRS
B Brg Wid = 3.5 Min Req = 1.5 (Support)
D Brg Wid = 1.5 Min Req = -
C Brg Wid = 1.5 Min Req = -
Bearing B Fcperp = 425psi.
Members not listed have forces less than 375#

Lumber

Top chord: 2x4 SP #1;
Bot chord: 2x4 SP #1;

Plating Notes

Plates sized for a minimum of 3.50 sq.in./piece.

Wind

Wind loads based on MWFRS with additional C&C member design.

Wind loading based on both gable and hip roof types.

DOUGLAS FLEMING
LICENSE
No. 66648
STATE OF
FLORIDA
PROFESSIONAL ENGINEER

COA #0 278
Florida Certificate of Product Approval #FL1999
09/04/2024

****WARNING**** READ AND FOLLOW ALL NOTES ON THIS DRAWING!
****IMPORTANT**** FURNISH THIS DRAWING TO ALL CONTRACTORS INCLUDING THE INSTALLERS

Trusses require extreme care in fabricating, handling, shipping, installing and bracing. Refer to and follow the latest edition of BCSI (Building Component Safety Information, by TPI and SBCA) for safety practices prior to performing these functions. Installers shall provide temporary bracing per BCSI. Unless noted otherwise, top chord shall have properly attached structural sheathing and bottom chord shall have a properly attached rigid ceiling. Locations shown for permanent lateral restraint of webs shall have continuous lateral restraint (CLR), installed with diagonal bracing installed on the CLR per BCSI sections B3, B7, or B10, as applicable. Apply plates to each face of truss and position as shown above and on the Joint Details, unless noted otherwise. Refer to drawings 160A-Z for standard plate positions. Refer to job's General Notes page for additional information.

Alpine, a division of ITW Building Components Group Inc. shall not be responsible for any deviation from this drawing, any failure to build the truss in conformance with ANSI/TPI 1, or for handling, shipping, installation and bracing of trusses. A seal on this drawing or cover page listing this drawing, indicates acceptance of professional engineering responsibility solely for the design shown. The suitability and use of this drawing for any structure is the responsibility of the Building Designer per ANSI/TPI 1 Sec.2.

For more information see these web sites: Alpine: alpineitw.com; TPI: tpinst.org; SBCA: sbcacomponents.com; ICC: iccsafe.org; AWC: awc.org

ALPINE
AN ITW COMPANY
155 Harlem Ave
North Building, 4th Floor
Glenview, IL 60025

SEQN: 214567 / EJAC FROM: RNB	Ply: 1 Qty: 2	**Job Number:** B59525R Perri Residence **Truss Label:** EJ22	Cust: R 857 JRef: 1Y2Y8570005 T53 / DrwNo: 247.24.1014.00145 SSB / DF 09/03/2024

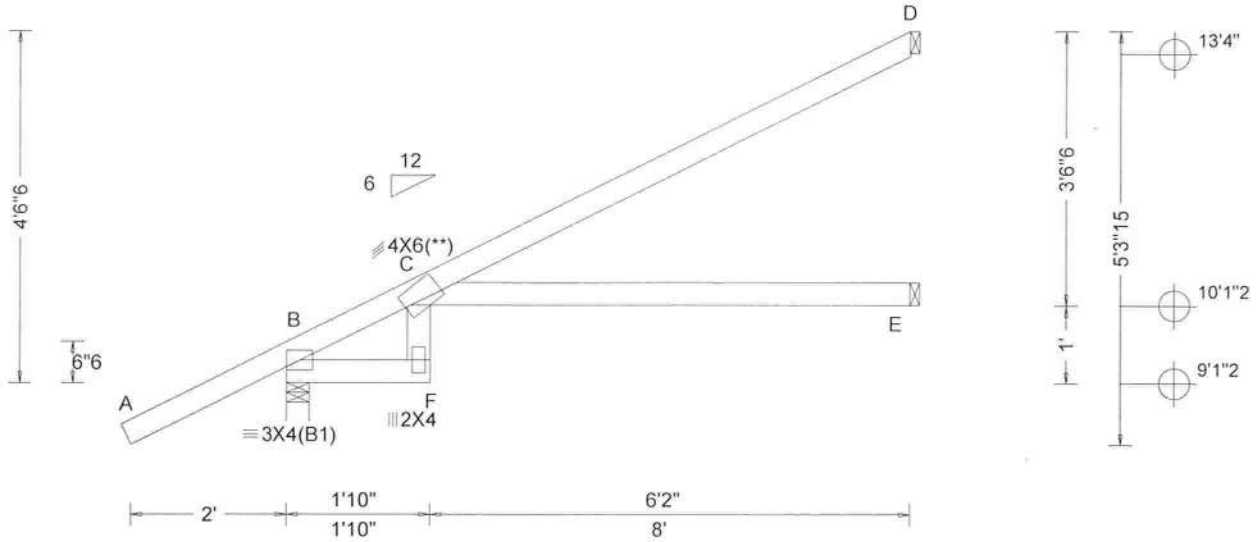

Loading Criteria (psf)	**Wind Criteria**	**Snow Criteria** (Pg,Pf in PSF)	**Defl/CSI Criteria**
TCLL: 20.00 TCDL: 7.00 BCLL: 0.00 BCDL: 10.00 Des Ld: 37.00 NCBCLL: 10.00 Soffit: 2.00 Load Duration: 1.25 Spacing: 24.0 "	Wind Std: ASCE 7-22 Speed: 130 mph Enclosure: Closed Risk Category: II EXP: B Kzt: NA Mean Height: 15.00 ft TCDL: 4.2 psf BCDL: 6.0 psf MWFRS Parallel Dist: h to 2h C&C Dist a: 3.00 ft Loc. from endwall: not in 9.00 ft GCpi: 0.18 Wind Duration: 1.60	Pg: NA Ct: NA CAT: NA Pf: NA Ce: NA Lu: NA Cs: NA Snow Duration: NA Building Code: FBC 8th Ed. 2023 Res. TPI Std: 2014 Rep Fac: Yes FT/RT:20(0)/0(0) Plate Type(s): WAVE	PP Deflection in loc L/defl L/# VERT(LL): 0.195 F 488 360 VERT(CL): 0.352 F 269 240 HORZ(LL): 0.097 C - - HORZ(TL): 0.176 C - - Creep Factor: 2.0 Max TC CSI: 0.730 Max BC CSI: 0.402 Max Web CSI: 0.018 VIEW Ver: 23.02.01A.1204.18

▲ Maximum Reactions (lbs)

	Gravity			Non-Gravity		
Loc	R+	/ R-	/ Rh	/ Rw	/ U	/ RL
B	448	/-	/-	/260	/-	/83
E	133	/-	/-	/70	/-	/-
D	205	/-	/-	/103	/37	/-

Wind reactions based on MWFRS
B Brg Wid = 3.5 Min Req = 1.5 (Support)
E Brg Wid = 1.5 Min Req = -
D Brg Wid = 1.5 Min Req = -
Bearing B Fcperp = 425psi.
Members not listed have forces less than 375#

Lumber

Top chord: 2x4 SP #1;
Bot chord: 2x4 SP #1;
Webs: 2x4 SP #3;

Plating Notes

(**) 1 plate(s) require special positioning. Refer to scaled plate plot details for special positioning requirements.

Plates sized for a minimum of 3.50 sq.in./piece.

Wind

Wind loads based on MWFRS with additional C&C member design.

Wind loading based on both gable and hip roof types.

DOUGLAS FLEMING
LICENSE
No. 66648
STATE OF
FLORIDA
PROFESSIONAL ENGINEER

COA #0 278
Florida Certificate of Product Approval #FL1999
09/04/2024

****WARNING**** READ AND FOLLOW ALL NOTES ON THIS DRAWING!
****IMPORTANT**** FURNISH THIS DRAWING TO ALL CONTRACTORS INCLUDING THE INSTALLERS

Trusses require extreme care in fabricating, handling, shipping, installing and bracing. Refer to and follow the latest edition of BCSI (Building Component Safety Information, by TPI and SBCA) for safety practices prior to performing these functions. Installers shall provide temporary bracing per BCSI. Unless noted otherwise, top chord shall have properly attached structural sheathing and bottom chord shall have a properly attached rigid ceiling. Locations shown for permanent lateral restraint of webs shall have continuous lateral restraint (CLR), installed with diagonal bracing installed on the CLR per BCSI sections B3, B7, or B10, as applicable. Apply plates to each face of truss and position as shown above and on the Joint Details, unless noted otherwise. Refer to drawings 160A-Z for standard plate positions. Refer to job's General Notes page for additional information.

Alpine, a division of ITW Building Components Group Inc. shall not be responsible for any deviation from this drawing, any failure to build the truss in conformance with ANSI/TPI 1, or for handling, shipping, installation and bracing of trusses. A seal on this drawing or cover page listing this drawing, indicates acceptance of professional engineering responsibility solely for the design shown. The suitability and use of this drawing for any structure is the responsibility of the Building Designer per ANSI/TPI 1 Sec.2.

For more information see these web sites: Alpine: alpineitw.com; TPI: tpinst.org; SBCA: sbcacomponents.com; ICC: iccsafe.org; AWC: awc.org

ALPINE
AN ITW COMPANY
155 Harlem Ave
North Building, 4th Floor
Glenview, IL 60025

SEQN: 214579 / EJAC FROM: RNB	Ply: 1 Qty: 2	**Job Number:** B59525R Perri Residence **Truss Label:** EJ23	Cust: R 857 JRef: 1Y2Y8570005 T54 / DrwNo: 247.24.1013.59301 SSB / DF 09/03/2024

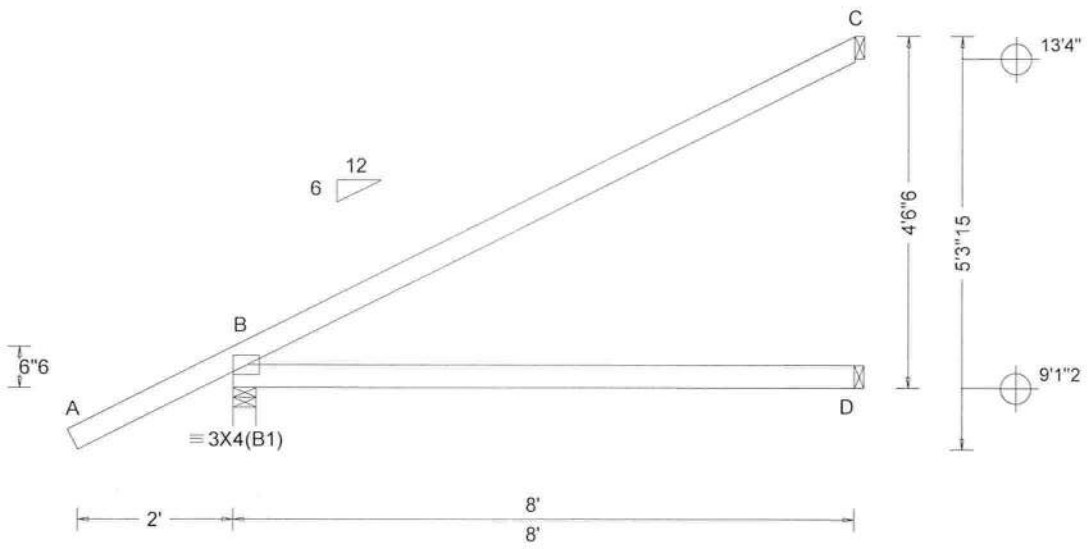

Loading Criteria (psf)	**Wind Criteria**	**Snow Criteria** (Pg,Pf in PSF)	**Defl/CSI Criteria**
TCLL: 20.00 TCDL: 7.00 BCLL: 0.00 BCDL: 10.00 Des Ld: 37.00 NCBCLL: 10.00 Soffit: 2.00 Load Duration: 1.25 Spacing: 24.0 "	Wind Std: ASCE 7-22 Speed: 130 mph Enclosure: Closed Risk Category: II EXP: B Kzt: NA Mean Height: 15.00 ft TCDL: 4.2 psf BCDL: 6.0 psf MWFRS Parallel Dist: h/2 to h C&C Dist a: 3.00 ft Loc. from endwall: not in 9.00 ft GCpi: 0.18 Wind Duration: 1.60	Pg: NA Ct: NA CAT: NA Pf: NA Ce: NA Lu: NA Cs: NA Snow Duration: NA Building Code: FBC 8th Ed. 2023 Res. TPI Std: 2014 Rep Fac: Yes FT/RT:20(0)/0(0) Plate Type(s): WAVE	PP Deflection in loc L/defl L/# VERT(LL): NA VERT(CL): NA HORZ(LL): 0.013 B - - HORZ(TL): 0.023 B - - Creep Factor: 2.0 Max TC CSI: 0.661 Max BC CSI: 0.504 Max Web CSI: 0.000 VIEW Ver: 23.02.01A.1204.18

▲ Maximum Reactions (lbs)

	Gravity			Non-Gravity		
Loc	R+	/ R-	/ Rh	/ Rw	/ U	/ RL
B	448	/-	/-	/260	/9	/115
D	149	/-	/-	/78	/-	/-
C	196	/-	/-	/95	/69	/-

Wind reactions based on MWFRS
B Brg Wid = 3.5 Min Req = 1.5 (Support)
D Brg Wid = 1.5 Min Req = -
C Brg Wid = 1.5 Min Req = -
Bearing B Fcperp = 425psi.
Members not listed have forces less than 375#

Lumber

Top chord: 2x4 SP #1;
Bot chord: 2x4 SP #1;

Plating Notes

Plates sized for a minimum of 3.50 sq.in./piece.

Wind

Wind loads based on MWFRS with additional C&C member design.

Wind loading based on both gable and hip roof types.

DOUGLAS FLEMING
LICENSE
No. 66648
STATE OF
FLORIDA
PROFESSIONAL ENGINEER

COA #0 278
Florida Certificate of Product Approval #FL1999
09/04/2024

****WARNING**** READ AND FOLLOW ALL NOTES ON THIS DRAWING!
****IMPORTANT**** FURNISH THIS DRAWING TO ALL CONTRACTORS INCLUDING THE INSTALLERS

Trusses require extreme care in fabricating, handling, shipping, installing and bracing. Refer to and follow the latest edition of BCSI (Building Component Safety Information, by TPI and SBCA) for safety practices prior to performing these functions. Installers shall provide temporary bracing per BCSI. Unless noted otherwise, top chord shall have properly attached structural sheathing and bottom chord shall have a properly attached rigid ceiling. Locations shown for permanent lateral restraint of webs shall have continuous lateral restraint (CLR), installed with diagonal bracing installed on the CLR per BCSI sections B3, B7, or B10, as applicable. Apply plates to each face of truss and position as shown above and on the Joint Details, unless noted otherwise. Refer to drawings 160A-Z for standard plate positions. Refer to job's General Notes page for additional information.

Alpine, a division of ITW Building Components Group Inc. shall not be responsible for any deviation from this drawing, any failure to build the truss in conformance with ANSI/TPI 1, or for handling, shipping, installation and bracing of trusses. A seal on this drawing or cover page listing this drawing, indicates acceptance of professional engineering responsibility solely for the design shown. The suitability and use of this drawing for any structure is the responsibility of the Building Designer per ANSI/TPI 1 Sec.2.

For more information see these web sites: Alpine: alpineitw.com; TPI: tpinst.org; SBCA: sbcacomponents.com; ICC: iccsafe.org; AWC: awc.org

ALPINE
AN ITW COMPANY
155 Harlem Ave
North Building, 4th Floor
Glenview, IL 60025

SEQN: 214672 / HIPS FROM: RNB	Ply: 1 Qty: 1	**Job Number:** B59525R Perri Residence **Truss Label:** HG1	Cust: R 857 JRef: 1Y2Y8570005 T30 / DrwNo: 247.24.1014.00441 SSB / DF 09/03/2024

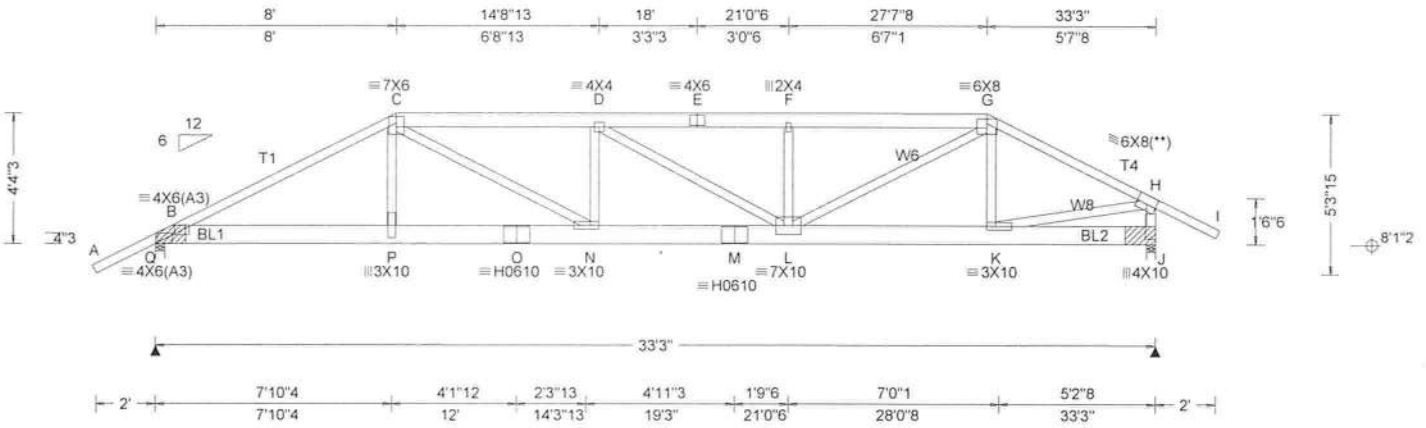

Loading Criteria (psf)

TCLL:	20.00
TCDL:	7.00
BCLL:	0.00
BCDL:	10.00
Des Ld:	37.00
NCBCLL:	10.00
Soffit:	2.00

Load Duration: 1.25
Spacing: 24.0 "

Wind Criteria
Wind Std: ASCE 7-22
Speed: 130 mph
Enclosure: Closed
Risk Category: II
EXP: B Kzt: NA
Mean Height: 15.00 ft
TCDL: 4.2 psf
BCDL: 6.0 psf
MWFRS Parallel Dist: 0 to h/2
C&C Dist a: 3.33 ft
Loc. from endwall: not in 9.00 ft
GCpi: 0.18
Wind Duration: 1.60

Snow Criteria (Pg,Pf in PSF)
Pg: NA Ct: NA CAT: NA
Pf: NA Ce: NA
Lu: NA Cs: NA
Snow Duration: NA

Building Code:
FBC 8th Ed. 2023 Res.
TPI Std: 2014
Rep Fac: Varies by Ld Case
FT/RT:20(0)/0(0)
Plate Type(s):
WAVE, HS

Defl/CSI Criteria

PP Deflection in	loc	L/defl	L/#
VERT(LL): 0.308	D	999	360
VERT(CL): 0.568	D	699	240
HORZ(LL): 0.064	C	-	-
HORZ(TL): 0.118	C	-	-

Creep Factor: 2.0
Max TC CSI: 0.892
Max BC CSI: 0.491
Max Web CSI: 0.877

VIEW Ver: 23.02.01A.1204.18

▲ Maximum Reactions (lbs)

	Gravity			Non-Gravity		
Loc	R+	/ R-	/ Rh	/ Rw	/ U	/ RL
Q	3202	/-	/-	/-	/250	/41
J	3306	/-	/-	/-	/266	/-

Wind reactions based on MWFRS
Q Brg Wid = 3.5 Min Req = -
J Brg Wid = 3.5 Min Req = -
Bearings Q & J Fcperp = 425psi.
Members not listed have forces less than 375#

Maximum Top Chord Forces Per Ply (lbs)

Chords	Tens.	Comp.	Chords	Tens.	Comp.
B - C	485	-6453	E - F	558	-7271
C - D	581	-7661	F - G	559	-7273
D - E	558	-7271	G - H	373	-4883

Maximum Bot Chord Forces Per Ply (lbs)

Chords	Tens.	Comp.	Chords	Tens.	Comp.
B - P	5714	-382	N - M	7706	-565
P - O	5681	-386	M - L	7706	-565
O - N	5681	-386	L - K	4334	-296

Maximum Web Forces Per Ply (lbs)

Webs	Tens.	Comp.	Webs	Tens.	Comp.
P - C	882	0	F - L	272	-875
C - N	2303	-186	L - G	3401	-263
N - D	250	-618	K - H	4376	-299
D - L	48	-508	H - J	286	-3268

Lumber

Top chord: 2x6 SP #1; T1 2x4 SP SS Dense;
T4 2x4 SP #1;
Bot chord: 2x8 SP SS Dense;
Webs: 2x4 SP #3; W6,W8 2x4 SP #1;

Special Loads

------(Lumber Dur.Fac.=1.25 / Plate Dur.Fac.=1.25)

TC: From	56 plf at	-2.13 to	56 plf at	8.00
TC: From	28 plf at	8.00 to	28 plf at	27.62
TC: From	56 plf at	27.62 to	56 plf at	35.38
BC: From	4 plf at	-2.13 to	4 plf at	0.00
BC: From	20 plf at	0.00 to	20 plf at	8.03
BC: From	10 plf at	8.03 to	10 plf at	27.59
BC: From	20 plf at	27.59 to	20 plf at	33.25
BC: From	4 plf at	33.25 to	4 plf at	35.38

TC: 295 lb Conc. Load at 8.03
TC: 190 lb Conc. Load at 10.06,12.06,14.06,16.06 17.81,19.56,21.56,23.56,25.56
TC: 237 lb Conc. Load at 27.59
BC: 561 lb Conc. Load at 8.03
BC: 144 lb Conc. Load at 10.06,12.06,14.06,16.06 17.81,19.56,21.56,23.56,25.56
BC: 390 lb Conc. Load at 27.59

Plating Notes

(**) 1 plate(s) require special positioning. Refer to scaled plate plot details for special positioning requirements.

Plates sized for a minimum of 3.50 sq.in./piece.

Purlins

In lieu of structural panels use purlins to brace all flat TC @ 24" oc.

Wind

Wind loads and reactions based on MWFRS.

Right end vertical not exposed to wind pressure.

Wind loading based on both gable and hip roof types.

Bearing Block(s)

Brg blocks:0.128"x3", min. nails

brg	x-loc	#blocks	length/blk	#nails/blk	wall plate
1	0.000'	1	12"	4	SPF Standard
2	32.958'	1	12"	5	SPF Standard

Brg block to be same size and species as chord.
Refer to drawing CNNAILSP1014 for more information.

DOUGLAS FLEMING
LICENSE
No. 66648
STATE OF
FLORIDA
PROFESSIONAL ENGINEER

COA #0 248
Florida Certificate of Product Approval #FL1999
09/04/2024

WARNING READ AND FOLLOW ALL NOTES ON THIS DRAWING!
IMPORTANT FURNISH THIS DRAWING TO ALL CONTRACTORS INCLUDING THE INSTALLERS

Trusses require extreme care in fabricating, handling, shipping, installing and bracing. Refer to and follow the latest edition of BCSI (Building Component Safety Information, by TPI and SBCA) for safety practices prior to performing these functions. Installers shall provide temporary bracing per BCSI. Unless noted otherwise, top chord shall have properly attached structural sheathing and bottom chord shall have a properly attached rigid ceiling. Locations shown for permanent lateral restraint of webs shall have continuous lateral restraint (CLR), installed with diagonal bracing installed on the CLR per BCSI sections B3, B7, or B10, as applicable. Apply plates to each face of truss and position as shown above and on the Joint Details, unless noted otherwise. Refer to drawings 160A-Z for standard plate positions. Refer to job's General Notes page for additional information.

Alpine, a division of ITW Building Components Group Inc. shall not be responsible for any deviation from this drawing, any failure to build the truss in conformance with ANSI/TPI 1, or for handling, shipping, installation and bracing of trusses. A seal on this drawing or cover page listing this drawing, indicates acceptance of professional engineering responsibility solely for the design shown. The suitability and use of this drawing for any structure is the responsibility of the Building Designer per ANSI/TPI 1 Sec.2.

For more information see these web sites: Alpine: alpineitw.com; TPI: tpinst.org; SBCA: sbcacomponents.com; ICC: iccsafe.org; AWC: awc.org

ALPINE
AN ITW COMPANY
155 Harlem Ave
North Building, 4th Floor
Glenview, IL 60025

SEQN: 214768 / SPEC FROM: RNB	Ply: 1 Qty: 1	**Job Number:** B59525R Perri Residence **Truss Label:** HG2	Cust: R 857 JRef: 1Y2Y8570005 T29 / DrwNo: 247.24.1013.59973 SSB / DF 09/03/2024

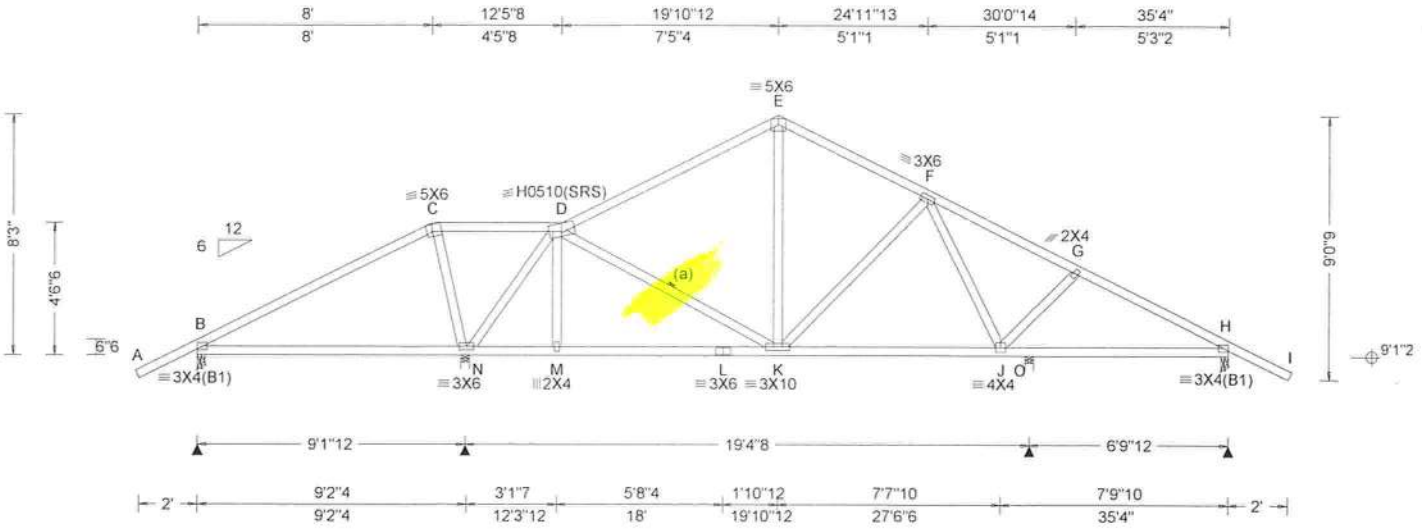

Loading Criteria (psf)

TCLL:	20.00
TCDL:	7.00
BCLL:	0.00
BCDL:	10.00
Des Ld:	37.00
NCBCLL:	10.00
Soffit:	2.00

Load Duration: 1.25
Spacing: 24.0 "

Wind Criteria
Wind Std: ASCE 7-22
Speed: 130 mph
Enclosure: Closed
Risk Category: II
EXP: B Kzt: NA
Mean Height: 15.00 ft
TCDL: 4.2 psf
BCDL: 6.0 psf
MWFRS Parallel Dist: 0 to h/2
C&C Dist a: 3.53 ft
Loc. from endwall: not in 9.00 ft
GCpi: 0.18
Wind Duration: 1.60

Snow Criteria (Pg,Pf in PSF)
Pg: NA Ct: NA CAT: NA
Pf: NA Ce: NA
Lu: NA Cs: NA
Snow Duration: NA

Building Code:
FBC 8th Ed. 2023 Res.
TPI Std: 2014
Rep Fac: Varies by Ld Case
FT/RT:20(0)/0(0)
Plate Type(s):
WAVE, HS

Defl/CSI Criteria

PP Deflection in	loc	L/defl	L/#
VERT(LL): 0.045	F	999	360
VERT(CL): 0.083	F	999	240
HORZ(LL): 0.017	H	-	-
HORZ(TL): 0.032	H	-	-

Creep Factor: 2.0
Max TC CSI: 0.810
Max BC CSI: 0.980
Max Web CSI: 0.455

VIEW Ver: 23.02.01A.1204.18

▲ Maximum Reactions (lbs)

	Gravity			Non-Gravity		
Loc	R+	/ R-	/ Rh	/ Rw	/ U	/ RL
B	690	/-	/-	/-	/31	/-
N	1985	/-	/-	/-	/140	/-
O	386	/-	/-	/24	/-	/-
H	829	/-	/-	/-	/74	/-

Wind reactions based on MWFRS
B Brg Wid = 3.0 Min Req = 1.5 (Support)
N Brg Wid = 3.5 Min Req = 2.5 (Support)
O Brg Wid = 3.5 Min Req = 1.5 (Truss)
H Brg Wid = 3.0 Min Req = 1.5 (Support)
Bearings B, N, O, & H Fcperp = 425psi.
Members not listed have forces less than 375#

Maximum Top Chord Forces Per Ply (lbs)

Chords	Tens.	Comp.	Chords	Tens.	Comp.
B - C	3	-569	F - G	49	-927
D - E	41	-848	G - H	98	-1114
E - F	32	-813			

Maximum Bot Chord Forces Per Ply (lbs)

Chords	Tens.	Comp.	Chords	Tens.	Comp.
B - N	411	0	L - K	612	0
N - M	609	0	K - J	815	-45
M - L	612	0	J - H	1847	-140

Maximum Web Forces Per Ply (lbs)

Webs	Tens.	Comp.	Webs	Tens.	Comp.
C - N	181	-493	E - K	391	0
N - D	99	-871			

Lumber

Top chord: 2x4 SP #1;
Bot chord: 2x4 SP #1;
Webs: 2x4 SP #3;

Bracing

(a) Continuous lateral restraint equally spaced on member. Or 1x4 #3SRB SPF-S or better "T" reinforcement. 80% length of web member. Attached with 8d Box or Gun (0.113"x2.5",min.)nails @ 6" oc.

Special Loads

------(Lumber Dur.Fac.=1.25 / Plate Dur.Fac.=1.25)

TC: From	56 plf at	-2.13 to	56 plf at	37.46
BC: From	4 plf at	-2.13 to	4 plf at	0.00
BC: From	20 plf at	0.00 to	20 plf at	35.33
BC: From	4 plf at	35.33 to	4 plf at	37.46

TC: 306 lb Conc. Load at 8.03
BC: 556 lb Conc. Load at 8.03

Plating Notes

Plates sized for a minimum of 3.50 sq.in./piece.

Purlins

In lieu of structural panels use purlins to brace all flat TC @ 24" oc.

Wind

Wind loads and reactions based on MWFRS.

Wind loading based on both gable and hip roof types.

DOUGLAS FLEMING
LICENSE
No. 66648
STATE OF
FLORIDA
PROFESSIONAL ENGINEER

COA #0 278
Florida Certificate of Product Approval #FL1999
09/04/2024

****WARNING**** READ AND FOLLOW ALL NOTES ON THIS DRAWING!
****IMPORTANT**** FURNISH THIS DRAWING TO ALL CONTRACTORS INCLUDING THE INSTALLERS

Trusses require extreme care in fabricating, handling, shipping, installing and bracing. Refer to and follow the latest edition of BCSI (Building Component Safety Information, by TPI and SBCA) for safety practices prior to performing these functions. Installers shall provide temporary bracing per BCSI. Unless noted otherwise, top chord shall have properly attached structural sheathing and bottom chord shall have a properly attached rigid ceiling. Locations shown for permanent lateral restraint of webs shall have continuous lateral restraint (CLR), installed with diagonal bracing installed on the CLR per BCSI sections B3, B7, or B10, as applicable. Apply plates to each face of truss and position as shown above and on the Joint Details, unless noted otherwise. Refer to drawings 160A-Z for standard plate positions. Refer to job's General Notes page for additional information.

Alpine, a division of ITW Building Components Group Inc. shall not be responsible for any deviation from this drawing, any failure to build the truss in conformance with ANSI/TPI 1, or for handling, shipping, installation and bracing of trusses. A seal on this drawing or cover page listing this drawing, indicates acceptance of professional engineering responsibility solely for the design shown. The suitability and use of this drawing for any structure is the responsibility of the Building Designer per ANSI/TPI 1 Sec.2.

For more information see these web sites: Alpine: alpineitw.com; TPI: tpinst.org; SBCA: sbcacomponents.com; ICC: iccsafe.org; AWC: awc.org

ALPINE
AN ITW COMPANY
155 Harlem Ave
North Building, 4th Floor
Glenview, IL 60025

SEQN: 214714 / HIPS FROM: RNB	Ply: 1 Qty: 1	**Job Number:** B59525R Perri Residence **Truss Label:** HG12	Cust: R 857 JRef: 1Y2Y8570005 T18 / DrwNo: 247.24.1014.00551 SSB / DF 09/03/2024

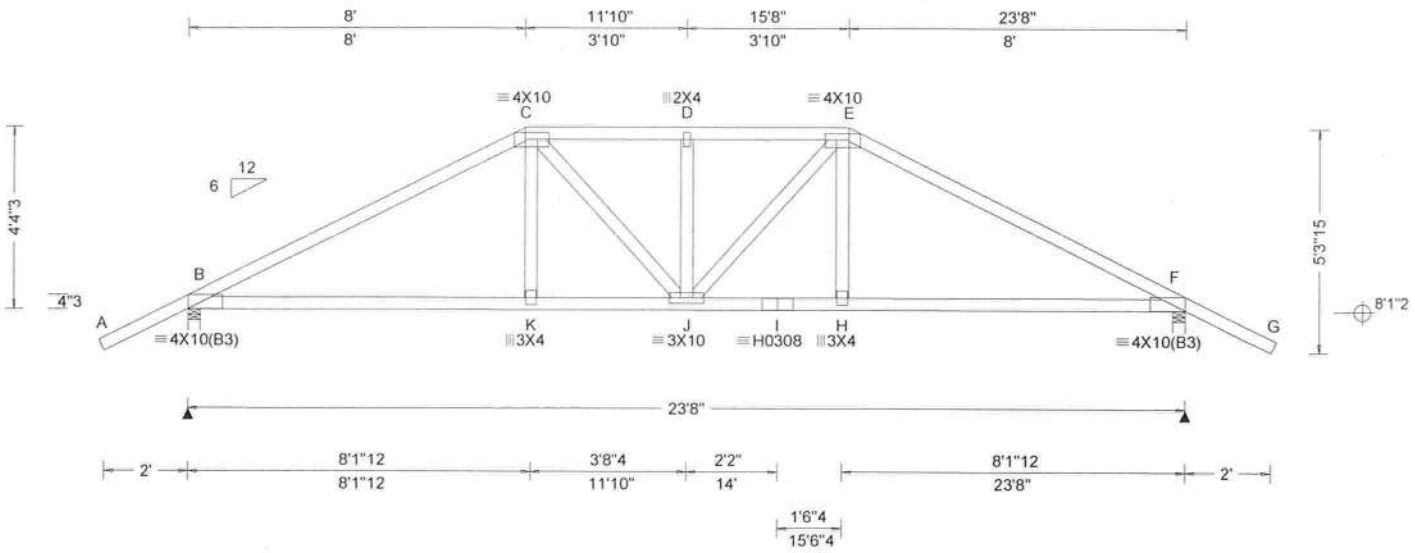

Loading Criteria (psf)
TCLL: 20.00
TCDL: 7.00
BCLL: 0.00
BCDL: 10.00
Des Ld: 37.00
NCBCLL: 10.00
Soffit: 2.00
Load Duration: 1.25
Spacing: 24.0 "

Wind Criteria
Wind Std: ASCE 7-22
Speed: 130 mph
Enclosure: Closed
Risk Category: II
EXP: B Kzt: NA
Mean Height: 15.00 ft
TCDL: 4.2 psf
BCDL: 6.0 psf
MWFRS Parallel Dist: 0 to h/2
C&C Dist a: 3.00 ft
Loc. from endwall: not in 9.00 ft
GCpi: 0.18
Wind Duration: 1.60

Snow Criteria (Pg,Pf in PSF)
Pg: NA Ct: NA CAT: NA
Pf: NA Ce: NA
Lu: NA Cs: NA
Snow Duration: NA

Building Code:
FBC 8th Ed. 2023 Res.
TPI Std: 2014
Rep Fac: Varies by Ld Case
FT/RT:20(0)/0(0)
Plate Type(s):
WAVE, HS

Defl/CSI Criteria

PP Deflection in	loc	L/defl	L/#
VERT(LL): 0.161	D	999	360
VERT(CL): 0.297	D	945	240
HORZ(LL): 0.063	F	-	-
HORZ(TL): 0.115	F	-	-

Creep Factor: 2.0
Max TC CSI: 0.949
Max BC CSI: 0.740
Max Web CSI: 0.274

VIEW Ver: 23.02.01A.1204.18

▲ Maximum Reactions (lbs)

Loc	Gravity R+	Gravity / R-	Non-Gravity / Rh	Non-Gravity / Rw	Non-Gravity / U	Non-Gravity / RL
B	2231	/-	/-	/-	/171	/-
F	2231	/-	/-	/-	/171	/-

Wind reactions based on MWFRS
B Brg Wid = 3.5 Min Req = 2.8 (Support)
F Brg Wid = 3.5 Min Req = 2.8 (Support)
Bearings B & F Fcperp = 425psi.
Members not listed have forces less than 375#

Maximum Top Chord Forces Per Ply (lbs)

Chords	Tens.	Comp.	Chords	Tens.	Comp.
B - C	298	-4015	D - E	284	-3885
C - D	284	-3885	E - F	298	-4015

Maximum Bot Chord Forces Per Ply (lbs)

Chords	Tens.	Comp.	Chords	Tens.	Comp.
B - K	3499	-243	I - H	3525	-239
K - J	3524	-239	H - F	3499	-243
J - I	3525	-239			

Maximum Web Forces Per Ply (lbs)

Webs	Tens.	Comp.	Webs	Tens.	Comp.
C - K	720	0	J - E	523	-65
C - J	523	-65	H - E	720	0
D - J	154	-449			

Lumber
Top chord: 2x4 SP #1;
Bot chord: 2x4 SP #1;
Webs: 2x4 SP #3;

Special Loads
------(Lumber Dur.Fac.=1.25 / Plate Dur.Fac.=1.25)

TC: From	56 plf at	-2.13 to	56 plf at	8.00
TC: From	28 plf at	8.00 to	28 plf at	15.67
TC: From	56 plf at	15.67 to	56 plf at	25.80
BC: From	4 plf at	-2.13 to	4 plf at	0.00
BC: From	20 plf at	0.00 to	20 plf at	8.03
BC: From	10 plf at	8.03 to	10 plf at	15.64
BC: From	20 plf at	15.64 to	20 plf at	23.67
BC: From	4 plf at	23.67 to	4 plf at	25.80

TC: 295 lb Conc. Load at 8.03,15.64
TC: 190 lb Conc. Load at 10.06,11.83,13.60
BC: 561 lb Conc. Load at 8.03,15.64
BC: 144 lb Conc. Load at 10.06,11.83,13.60

Plating Notes
Plates sized for a minimum of 3.50 sq.in./piece.

Purlins
In lieu of structural panels use purlins to brace all flat TC @ 24" oc.

Wind
Wind loads and reactions based on MWFRS.
Wind loading based on both gable and hip roof types.

DOUGLAS FLEMING
LICENSE
No. 66648
STATE OF
FLORIDA
PROFESSIONAL ENGINEER

COA #0278
Florida Certificate of Product Approval #FL1999
09/04/2024

WARNING READ AND FOLLOW ALL NOTES ON THIS DRAWING!
IMPORTANT FURNISH THIS DRAWING TO ALL CONTRACTORS INCLUDING THE INSTALLERS

Trusses require extreme care in fabricating, handling, shipping, installing and bracing. Refer to and follow the latest edition of BCSI (Building Component Safety Information, by TPI and SBCA) for safety practices prior to performing these functions. Installers shall provide temporary bracing per BCSI. Unless noted otherwise, top chord shall have properly attached structural sheathing and bottom chord shall have a properly attached rigid ceiling. Locations shown for permanent lateral restraint of webs shall have continuous lateral restraint (CLR), installed with diagonal bracing installed on the CLR per BCSI sections B3, B7, or B10, as applicable. Apply plates to each face of truss and position as shown above and on the Joint Details, unless noted otherwise. Refer to drawings 160A-Z for standard plate positions. Refer to job's General Notes page for additional information.

Alpine, a division of ITW Building Components Group Inc. shall not be responsible for any deviation from this drawing, any failure to build the truss in conformance with ANSI/TPI 1, or for handling, shipping, installation and bracing of trusses. A seal on this drawing or cover page listing this drawing, indicates acceptance of professional engineering responsibility solely for the design shown. The suitability and use of this drawing for any structure is the responsibility of the Building Designer per ANSI/TPI 1 Sec.2.

For more information see these web sites: Alpine: alpineitw.com; TPI: tpinst.org; SBCA: sbcacomponents.com; ICC: iccsafe.org; AWC: awc.org

ALPINE
AN ITW COMPANY
155 Harlem Ave
North Building, 4th Floor
Glenview, IL 60025

SEQN: 214731 / HIPS FROM: RNB	Ply: 1 Qty: 1	**Job Number:** B59525R Perri Residence **Truss Label:** HG13	Cust: R 857 JRef: 1Y2Y8570005 T12 / DrwNo: 247.24.1013.59989 SSB / DF 09/03/2024

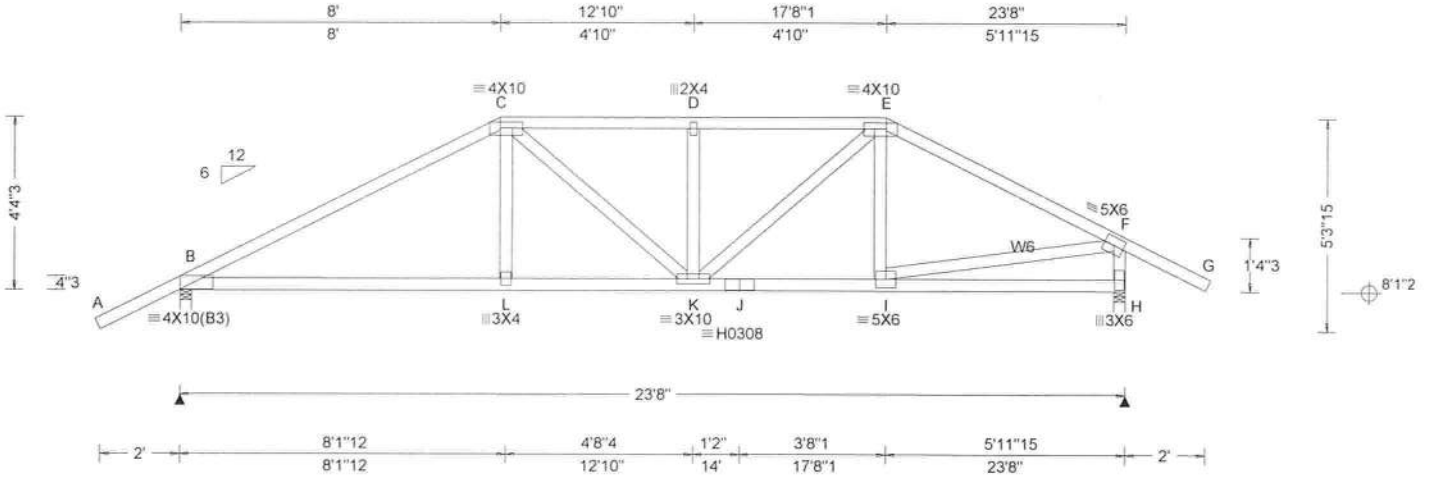

Loading Criteria (psf)

TCLL:	20.00
TCDL:	7.00
BCLL:	0.00
BCDL:	10.00
Des Ld:	37.00
NCBCLL:	10.00
Soffit:	2.00

Load Duration: 1.25
Spacing: 24.0 "

Wind Criteria
Wind Std: ASCE 7-22
Speed: 130 mph
Enclosure: Closed
Risk Category: II
EXP: B Kzt: NA
Mean Height: 15.00 ft
TCDL: 4.2 psf
BCDL: 6.0 psf
MWFRS Parallel Dist: 0 to h/2
C&C Dist a: 3.00 ft
Loc. from endwall: not in 9.00 ft
GCpi: 0.18
Wind Duration: 1.60

Snow Criteria (Pg,Pf in PSF)
Pg: NA Ct: NA CAT: NA
Pf: NA Ce: NA
Lu: NA Cs: NA
Snow Duration: NA

Building Code:
FBC 8th Ed. 2023 Res.
TPI Std: 2014
Rep Fac: Varies by Ld Case
FT/RT:20(0)/0(0)
Plate Type(s):
WAVE, HS

Defl/CSI Criteria

PP Deflection in	loc	L/defl	L/#
VERT(LL): 0.148	D	999	360
VERT(CL): 0.272	D	999	240
HORZ(LL): 0.045	H	-	-
HORZ(TL): 0.083	H	-	-

Creep Factor: 2.0
Max TC CSI: 0.929
Max BC CSI: 0.789
Max Web CSI: 0.457

VIEW Ver: 23.02.01A.1204.18

▲ Maximum Reactions (lbs)

Loc	Gravity R+	Gravity / R-	/ Rh	Non-Gravity / Rw	/ U	/ RL
B	2211	/-	/-	/-	/170	/37
H	2315	/-	/-	/-	/178	/-

Wind reactions based on MWFRS
B Brg Wid = 3.5 Min Req = 2.8 (Support)
H Brg Wid = 3.5 Min Req = 2.9 (Support)
Bearings B & H Fcperp = 425psi.
Members not listed have forces less than 375#

Maximum Top Chord Forces Per Ply (lbs)

Chords	Tens.	Comp.	Chords	Tens.	Comp.
B - C	298	- 3979	D - E	284	- 3859
C - D	284	- 3859	E - F	246	- 3361

Maximum Bot Chord Forces Per Ply (lbs)

Chords	Tens.	Comp.	Chords	Tens.	Comp.
B - L	3468	- 209	K - J	2938	- 169
L - K	3495	- 205	J - I	2938	- 169

Maximum Web Forces Per Ply (lbs)

Webs	Tens.	Comp.	Webs	Tens.	Comp.
C - L	745	0	K - E	1200	- 106
C - K	475	- 58	I - F	2949	- 184
D - K	210	- 637	F - H	206	- 2267

Lumber

Top chord: 2x4 SP #1;
Bot chord: 2x4 SP #1;
Webs: 2x4 SP #3; W6 2x4 SP #1;

Special Loads

------(Lumber Dur.Fac.=1.25 / Plate Dur.Fac.=1.25)

TC: From	56 plf at	-2.13 to	56 plf at	8.00
TC: From	28 plf at	8.00 to	28 plf at	17.67
TC: From	56 plf at	17.67 to	56 plf at	25.80
BC: From	4 plf at	-2.13 to	4 plf at	0.00
BC: From	20 plf at	0.00 to	20 plf at	8.03
BC: From	10 plf at	8.03 to	10 plf at	17.64
BC: From	20 plf at	17.64 to	20 plf at	23.67
BC: From	4 plf at	23.67 to	4 plf at	25.80

TC: 295 lb Conc. Load at 8.03
TC: 190 lb Conc. Load at 10.06,12.06,13.61,15.61
TC: 250 lb Conc. Load at 17.64
BC: 561 lb Conc. Load at 8.03
BC: 144 lb Conc. Load at 10.06,12.06,13.61,15.61
BC: 412 lb Conc. Load at 17.64

Plating Notes

Plates sized for a minimum of 3.50 sq.in./piece.

Purlins

In lieu of structural panels use purlins to brace all flat TC @ 24" oc.

Wind

Wind loads and reactions based on MWFRS.

Right end vertical not exposed to wind pressure.

Wind loading based on both gable and hip roof types.

DOUGLAS FLEMING
LICENSE
No. 66648
STATE OF
FLORIDA
PROFESSIONAL ENGINEER

COA #0 278
Florida Certificate of Product Approval #FL1999
09/04/2024

****WARNING**** READ AND FOLLOW ALL NOTES ON THIS DRAWING!
****IMPORTANT**** FURNISH THIS DRAWING TO ALL CONTRACTORS INCLUDING THE INSTALLERS

Trusses require extreme care in fabricating, handling, shipping, installing and bracing. Refer to and follow the latest edition of BCSI (Building Component Safety Information, by TPI and SBCA) for safety practices prior to performing these functions. Installers shall provide temporary bracing per BCSI. Unless noted otherwise, top chord shall have properly attached structural sheathing and bottom chord shall have a properly attached rigid ceiling. Locations shown for permanent lateral restraint of webs shall have continuous lateral restraint (CLR), installed with diagonal bracing installed on the CLR per BCSI sections B3, B7, or B10, as applicable. Apply plates to each face of truss and position as shown above and on the Joint Details, unless noted otherwise. Refer to drawings 160A-Z for standard plate positions. Refer to job's General Notes page for additional information.

Alpine, a division of ITW Building Components Group Inc. shall not be responsible for any deviation from this drawing, any failure to build the truss in conformance with ANSI/TPI 1, or for handling, shipping, installation and bracing of trusses. A seal on this drawing or cover page listing this drawing, indicates acceptance of professional engineering responsibility solely for the design shown. The suitability and use of this drawing for any structure is the responsibility of the Building Designer per ANSI/TPI 1 Sec.2.

For more information see these web sites: Alpine: alpineitw.com; TPI: tpinst.org; SBCA: sbcacomponents.com; ICC: iccsafe.org; AWC: awc.org

ALPINE
AN ITW COMPANY
155 Harlem Ave
North Building, 4th Floor
Glenview, IL 60025

SEQN: 214776 / FLAT FROM: RNB	Ply: 1 Qty: 1	**Job Number:** B59525R Perri Residence **Truss Label:** HG16	Cust: R 857 JRef: 1Y2Y8570005 T45 / DrwNo: 247.24.1013.59832 SSB / DF 09/03/2024

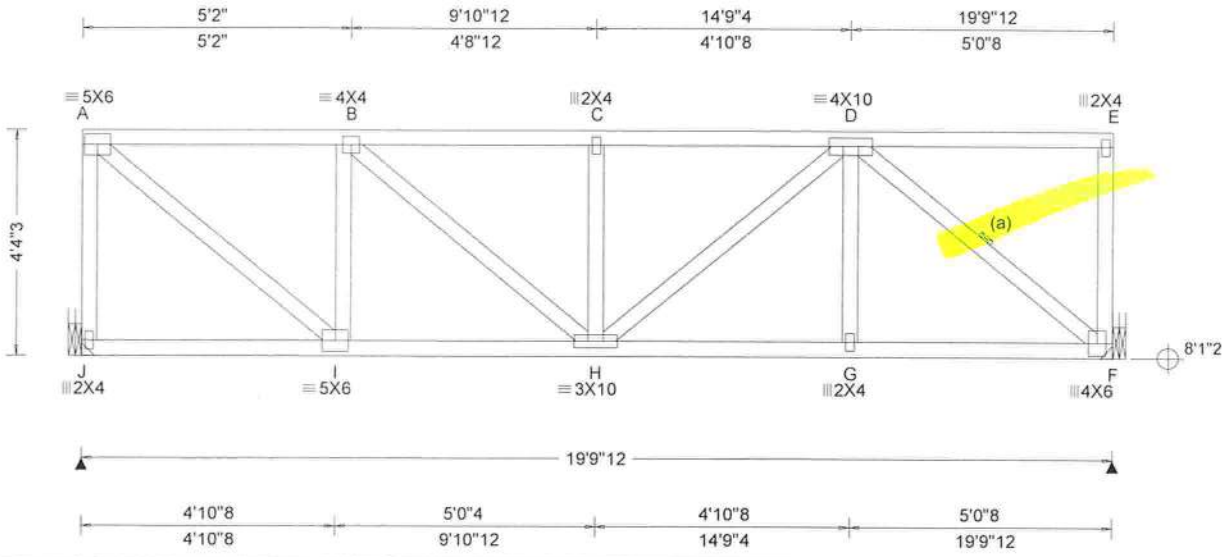

Loading Criteria (psf)

TCLL:	20.00
TCDL:	7.00
BCLL:	0.00
BCDL:	10.00
Des Ld:	37.00
NCBCLL:	10.00
Soffit:	2.00

Load Duration: 1.25
Spacing: 24.0 "

Wind Criteria
Wind Std: ASCE 7-22
Speed: 130 mph
Enclosure: Closed
Risk Category: II
EXP: B Kzt: NA
Mean Height: 15.00 ft
TCDL: 4.2 psf
BCDL: 6.0 psf
MWFRS Parallel Dist: 0 to h/2
C&C Dist a: 3.00 ft
Loc. from endwall: Any
GCpi: 0.18
Wind Duration: 1.60

Snow Criteria (Pg,Pf in PSF)
Pg: NA Ct: NA CAT: NA
Pf: NA Ce: NA
Lu: NA Cs: NA
Snow Duration: NA

Building Code:
FBC 8th Ed. 2023 Res.
TPI Std: 2014
Rep Fac: Varies by Ld Case
FT/RT:20(0)/0(0)
Plate Type(s):
WAVE

Defl/CSI Criteria

PP Deflection in	loc	L/defl	L/#
VERT(LL): 0.080	C	999	360
VERT(CL): 0.149	C	999	240
HORZ(LL): 0.023	F	-	-
HORZ(TL): 0.042	F	-	-

Creep Factor: 2.0
Max TC CSI: 0.720
Max BC CSI: 0.706
Max Web CSI: 0.949

VIEW Ver: 23.02.01A.1204.18

▲ Maximum Reactions (lbs)

	Gravity			Non-Gravity		
Loc	R+	/ R-	/ Rh	/ Rw	/ U	/ RL
J	1864	/-	/-	/-	/143	/79
F	1873	/-	/-	/-	/160	/-

Wind reactions based on MWFRS
J Brg Wid = - Min Req = -
F Brg Wid = - Min Req = -
Members not listed have forces less than 375#

Maximum Top Chord Forces Per Ply (lbs)

Chords	Tens.	Comp.	Chords	Tens.	Comp.
A - B	181	- 1915	C - D	225	- 2535
B - C	225	- 2535			

Maximum Bot Chord Forces Per Ply (lbs)

Chords	Tens.	Comp.	Chords	Tens.	Comp.
I - H	1997	- 199	G - F	1984	- 173
H - G	1984	- 173			

Maximum Web Forces Per Ply (lbs)

Webs	Tens.	Comp.	Webs	Tens.	Comp.
A - J	172	- 1766	C - H	172	- 535
A - I	2491	- 184	H - D	717	- 68
I - B	243	- 1146	D - G	452	0
B - H	708	- 35	D - F	222	- 2546

Lumber
Top chord: 2x4 SP #1;
Bot chord: 2x4 SP #1;
Webs: 2x4 SP #3;

Bracing
(a) Continuous lateral restraint equally spaced on member. Or 2x6 #3 or better "T" reinforcement. 80% length of web member. Attached with 10d Box or Gun (0.128"x3",min.)nails @ 6" oc.

Special Loads
------(Lumber Dur.Fac.=1.25 / Plate Dur.Fac.=1.25)
TC: From 27 plf at 0.00 to 27 plf at 19.81
BC: From 10 plf at 0.00 to 10 plf at 19.81
TC: 190 lb Conc. Load at 1.94, 3.94, 5.94, 7.94 9.94,11.94,13.94,15.94,17.94
BC: 144 lb Conc. Load at 1.94, 3.94, 5.94, 7.94 9.94,11.94,13.94,15.94,17.94

Plating Notes
Plates sized for a minimum of 3.50 sq.in./piece.

Hangers / Ties
(J) Hanger Support Required, by others

Purlins
The TC of this truss shall be braced with attached spans at 24" oc in lieu of structural sheathing.

Wind
Wind loads and reactions based on MWFRS.
End verticals not exposed to wind pressure.

Additional Notes
Truss must be installed as shown with top chord up.

DOUGLAS FLEMING LICENSE No. 66648 STATE OF FLORIDA PROFESSIONAL ENGINEER

COA #0 278
Florida Certificate of Product Approval #FL1999
09/04/2024

WARNING READ AND FOLLOW ALL NOTES ON THIS DRAWING!
IMPORTANT FURNISH THIS DRAWING TO ALL CONTRACTORS INCLUDING THE INSTALLERS

Trusses require extreme care in fabricating, handling, shipping, installing and bracing. Refer to and follow the latest edition of BCSI (Building Component Safety Information, by TPI and SBCA) for safety practices prior to performing these functions. Installers shall provide temporary bracing per BCSI. Unless noted otherwise, top chord shall have properly attached structural sheathing and bottom chord shall have a properly attached rigid ceiling. Locations shown for permanent lateral restraint of webs shall have continuous lateral restraint (CLR), installed with diagonal bracing installed on the CLR per BCSI sections B3, B7, or B10, as applicable. Apply plates to each face of truss and position as shown above and on the Joint Details, unless noted otherwise. Refer to drawings 160A-Z for standard plate positions. Refer to job's General Notes page for additional information.

Alpine, a division of ITW Building Components Group Inc. shall not be responsible for any deviation from this drawing, any failure to build the truss in conformance with ANSI/TPI 1, or for handling, shipping, installation and bracing of trusses. A seal on this drawing or cover page listing this drawing, indicates acceptance of professional engineering responsibility solely for the design shown. The suitability and use of this drawing for any structure is the responsibility of the Building Designer per ANSI/TPI 1 Sec.2.

For more information see these web sites: Alpine: alpineitw.com; TPI: tpinst.org; SBCA: sbcacomponents.com; ICC: iccsafe.org; AWC: awc.org

ALPINE AN ITW COMPANY
155 Harlem Ave
North Building, 4th Floor
Glenview, IL 60025

SEQN: 214649 / HIP_ FROM: RNB	Ply: 1 Qty: 4	Job Number: B59525R Perri Residence Truss Label: HJ4	Cust: R 857 JRef: 1Y2Y8570005 T10 / DrwNo: 247.24.1013.59286 SSB / DF 09/03/2024

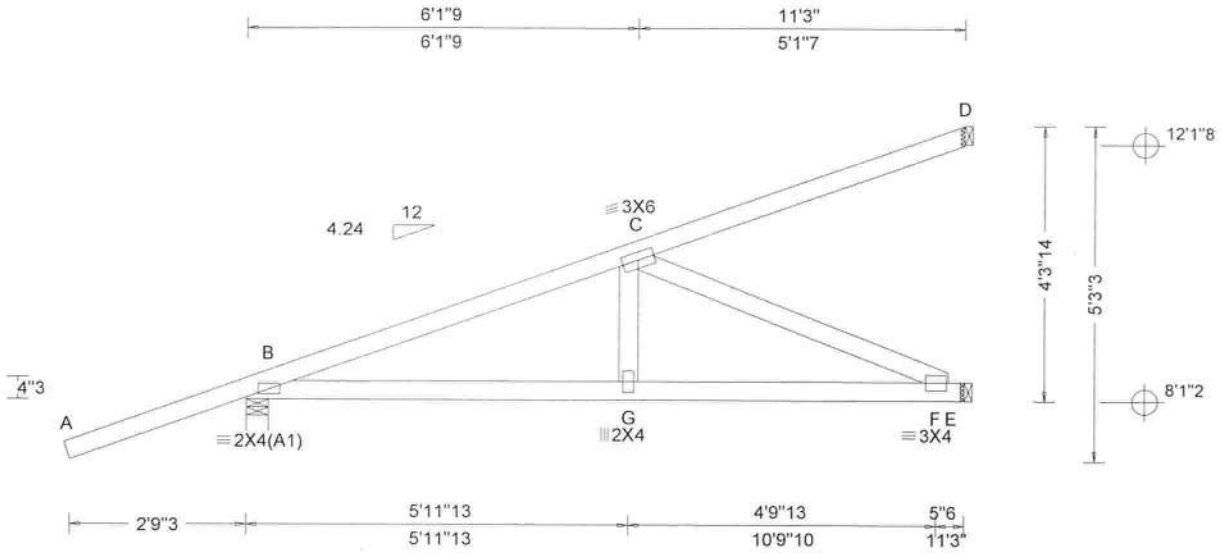

Loading Criteria (psf)

TCLL:	20.00
TCDL:	7.00
BCLL:	0.00
BCDL:	10.00
Des Ld:	37.00
NCBCLL:	10.00
Soffit:	2.00

Load Duration: 1.25
Spacing: 24.0 "

Wind Criteria
Wind Std: ASCE 7-22
Speed: 130 mph
Enclosure: Closed
Risk Category: II
EXP: B Kzt: NA
Mean Height: 15.00 ft
TCDL: 4.2 psf
BCDL: 6.0 psf
MWFRS Parallel Dist: 0 to h/2
C&C Dist a: 3.00 ft
Loc. from endwall: not in 4.50 ft
GCpi: 0.18
Wind Duration: 1.60

Snow Criteria (Pg,Pf in PSF)
Pg: NA Ct: NA CAT: NA
Pf: NA Ce: NA
Lu: NA Cs: NA
Snow Duration: NA

Building Code:
FBC 8th Ed. 2023 Res.
TPI Std: 2014
Rep Fac: Varies by Ld Case
FT/RT:20(0)/0(0)
Plate Type(s):
WAVE

Defl/CSI Criteria

PP Deflection in	loc	L/defl	L/#
VERT(LL): 0.029	G	999	360
VERT(CL): 0.055	G	999	240
HORZ(LL): 0.007	F	-	-
HORZ(TL): 0.013	F	-	-

Creep Factor: 2.0
Max TC CSI: 0.589
Max BC CSI: 0.663
Max Web CSI: 0.520

VIEW Ver: 23.02.01A.1204.18

▲ Maximum Reactions (lbs)

Loc	Gravity R+	/ R-	/ Rh	Non-Gravity / Rw	/ U	/ RL
B	416	/-	/-	/-	/73	/-
E	417	/-	/-	/-	/16	/-
D	105	/-	/-	/-	/26	/-

Wind reactions based on MWFRS
B Brg Wid = 4.2 Min Req = 1.5 (Support)
E Brg Wid = 1.5 Min Req = -
D Brg Wid = 1.5 Min Req = -
Bearing B Fcperp = 425psi.
Members not listed have forces less than 375#

Maximum Top Chord Forces Per Ply (lbs)

Chords	Tens.	Comp.
B - C	97	-855

Maximum Bot Chord Forces Per Ply (lbs)

Chords	Tens.	Comp.	Chords	Tens.	Comp.
B - G	804	-86	G - F	791	-89

Maximum Web Forces Per Ply (lbs)

Webs	Tens.	Comp.
C - F	98	-866

Lumber
Top chord: 2x4 SP #1;
Bot chord: 2x4 SP #1;
Webs: 2x4 SP #3;

Special Loads
------(Lumber Dur.Fac.=1.25 / Plate Dur.Fac.=1.25)
TC: From 1 plf at -2.93 to 55 plf at -0.10
TC: From 2 plf at -0.10 to 2 plf at 11.25
BC: From 0 plf at -2.93 to 4 plf at -0.10
BC: From 2 plf at 0.00 to 2 plf at 11.25
TC: -2 lb Conc. Load at 2.79
TC: 151 lb Conc. Load at 5.62
TC: 269 lb Conc. Load at 8.45
BC: 48 lb Conc. Load at 2.79
BC: 132 lb Conc. Load at 5.62
BC: 210 lb Conc. Load at 8.45

Plating Notes
Plates sized for a minimum of 3.50 sq.in./piece.

Wind
Wind loads and reactions based on MWFRS.
Wind loading based on both gable and hip roof types.

COA #0 278
Florida Certificate of Product Approval #FL1999
09/04/2024

WARNING READ AND FOLLOW ALL NOTES ON THIS DRAWING!
IMPORTANT FURNISH THIS DRAWING TO ALL CONTRACTORS INCLUDING THE INSTALLERS

Trusses require extreme care in fabricating, handling, shipping, installing and bracing. Refer to and follow the latest edition of BCSI (Building Component Safety Information, by TPI and SBCA) for safety practices prior to performing these functions. Installers shall provide temporary bracing per BCSI. Unless noted otherwise, top chord shall have properly attached structural sheathing and bottom chord shall have a properly attached rigid ceiling. Locations shown for permanent lateral restraint of webs shall have continuous lateral restraint (CLR), installed with diagonal bracing installed on the CLR per BCSI sections B3, B7, or B10, as applicable. Apply plates to each face of truss and position as shown above and on the Joint Details, unless noted otherwise. Refer to drawings 160A-Z for standard plate positions. Refer to job's General Notes page for additional information.

Alpine, a division of ITW Building Components Group Inc. shall not be responsible for any deviation from this drawing, any failure to build the truss in conformance with ANSI/TPI 1, or for handling, shipping, installation and bracing of trusses. A seal on this drawing or cover page listing this drawing, indicates acceptance of professional engineering responsibility solely for the design shown. The suitability and use of this drawing for any structure is the responsibility of the Building Designer per ANSI/TPI 1 Sec.2.

For more information see these web sites: Alpine: alpineitw.com; TPI: tpinst.org; SBCA: sbcacomponents.com; ICC: iccsafe.org; AWC: awc.org

ALPINE AN ITW COMPANY
155 Harlem Ave
North Building, 4th Floor
Glenview, IL 60025

SEQN: 214726 / HIP_ FROM: RNB	Ply: 1 Qty: 1	**Job Number:** B59525R Perri Residence **Truss Label:** HJ6	Cust: R 857 JRef: 1Y2Y8570005 T52 / DrwNo: 247.24.1013.59536 SSB / DF 09/03/2024

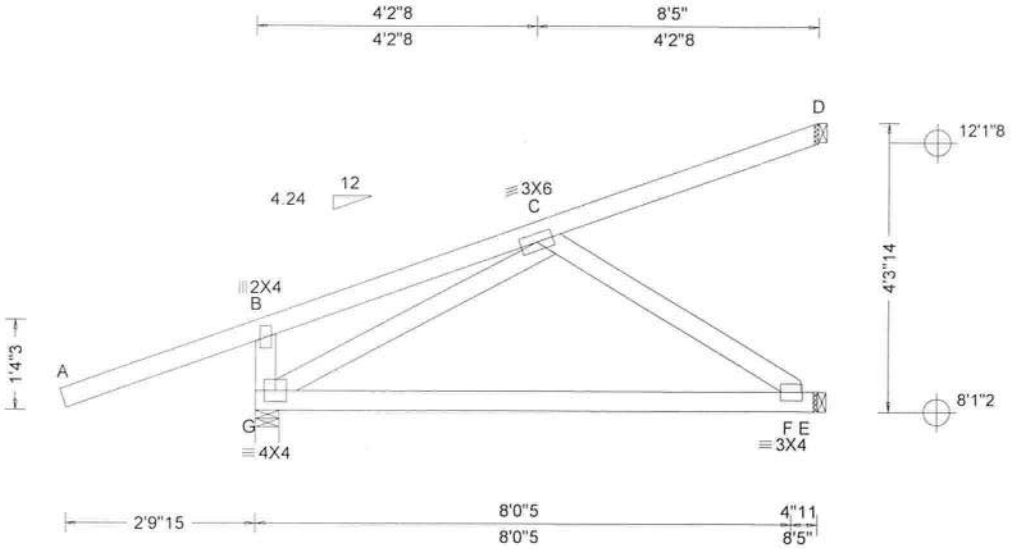

Loading Criteria (psf)	**Wind Criteria**	**Snow Criteria** (Pg,Pf in PSF)	**Defl/CSI Criteria**	**▲ Maximum Reactions (lbs)**
TCLL: 20.00	Wind Std: ASCE 7-22	Pg: NA Ct: NA CAT: NA	PP Deflection in loc L/defl L/#	
TCDL: 7.00	Speed: 130 mph	Pf: NA Ce: NA	VERT(LL): 0.028 F 999 360	
BCLL: 0.00	Enclosure: Closed	Lu: NA Cs: NA	VERT(CL): 0.052 F 999 240	
BCDL: 10.00	Risk Category: II	Snow Duration: NA	HORZ(LL): 0.009 C - -	
Des Ld: 37.00	EXP: B Kzt: NA		HORZ(TL): 0.017 C - -	
NCBCLL: 10.00	Mean Height: 15.00 ft	Building Code:	Creep Factor: 2.0	
Soffit: 2.00	TCDL: 4.2 psf	FBC 8th Ed. 2023 Res.	Max TC CSI: 0.320	
Load Duration: 1.25	BCDL: 6.0 psf	TPI Std: 2014	Max BC CSI: 0.540	
Spacing: 24.0 "	MWFRS Parallel Dist: 0 to h/2	Rep Fac: Varies by Ld Case	Max Web CSI: 0.274	
	C&C Dist a: 3.00 ft	FT/RT:20(0)/0(0)		
	Loc. from endwall: not in 9.00 ft	Plate Type(s):		
	GCpi: 0.18	WAVE	VIEW Ver: 23.02.01A.1204.18	
	Wind Duration: 1.60			

	Gravity			Non-Gravity		
Loc	R+	/ R-	/ Rh	/ Rw	/ U	/ RL
G	364	/-	/-	/-	/53	/34
E	268	/-	/-	/-	/11	/-
D	60	/-	/-	/-	/9	/-

Wind reactions based on MWFRS
G Brg Wid = 4.2 Min Req = 1.5 (Support)
E Brg Wid = 1.5 Min Req = -
D Brg Wid = 1.5 Min Req = -
Bearing G Fcperp = 425psi.
Members not listed have forces less than 375#

Lumber

Top chord: 2x4 SP #1;
Bot chord: 2x4 SP SS Dense;
Webs: 2x4 SP #3;

Special Loads

------(Lumber Dur.Fac.=1.25 / Plate Dur.Fac.=1.25)

TC: From	1 plf at	-2.99 to	55 plf at	-0.10
TC: From	2 plf at	-0.10 to	2 plf at	8.42
BC: From	0 plf at	-2.99 to	4 plf at	-0.10
BC: From	2 plf at	0.00 to	2 plf at	8.42

TC: 69 lb Conc. Load at 2.79
TC: 213 lb Conc. Load at 5.61
BC: 105 lb Conc. Load at 2.79
BC: 184 lb Conc. Load at 5.61

Plating Notes

Plates sized for a minimum of 3.50 sq.in./piece.

Wind

Wind loads and reactions based on MWFRS.

Left end vertical not exposed to wind pressure.

Wind loading based on both gable and hip roof types.

DOUGLAS FLEMING LICENSE No. 66648 STATE OF FLORIDA PROFESSIONAL ENGINEER

COA #0 278
Florida Certificate of Product Approval #FL1999
09/04/2024

WARNING READ AND FOLLOW ALL NOTES ON THIS DRAWING!
IMPORTANT FURNISH THIS DRAWING TO ALL CONTRACTORS INCLUDING THE INSTALLERS

Trusses require extreme care in fabricating, handling, shipping, installing and bracing. Refer to and follow the latest edition of BCSI (Building Component Safety Information, by TPI and SBCA) for safety practices prior to performing these functions. Installers shall provide temporary bracing per BCSI. Unless noted otherwise, top chord shall have properly attached structural sheathing and bottom chord shall have a properly attached rigid ceiling. Locations shown for permanent lateral restraint of webs shall have continuous lateral restraint (CLR), installed with diagonal bracing installed on the CLR per BCSI sections B3, B7, or B10, as applicable. Apply plates to each face of truss and position as shown above and on the Joint Details, unless noted otherwise. Refer to drawings 160A-Z for standard plate positions. Refer to job's General Notes page for additional information.

Alpine, a division of ITW Building Components Group Inc. shall not be responsible for any deviation from this drawing, any failure to build the truss in conformance with ANSI/TPI 1, or for handling, shipping, installation and bracing of trusses. A seal on this drawing or cover page listing this drawing, indicates acceptance of professional engineering responsibility solely for the design shown. The suitability and use of this drawing for any structure is the responsibility of the Building Designer per ANSI/TPI 1 Sec.2.

For more information see these web sites: Alpine: alpineitw.com; TPI: tpinst.org; SBCA: sbcacomponents.com; ICC: iccsafe.org; AWC: awc.org

ALPINE AN ITW COMPANY
155 Harlem Ave
North Building, 4th Floor
Glenview, IL 60025

SEQN: 214728 / HIP_ FROM: RNB	Ply: 1 Qty: 1	**Job Number:** B59525R Perri Residence **Truss Label:** HJ7	Cust: R 857 JRef: 1Y2Y8570005 T50 / DrwNo: 247.24.1014.00645 SSB / DF 09/03/2024

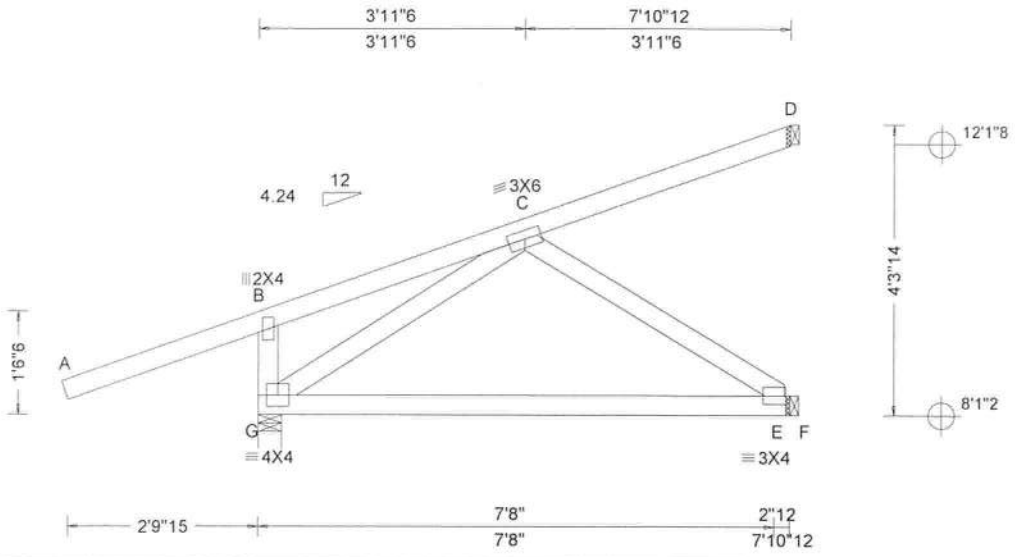

Loading Criteria (psf)	**Wind Criteria**	**Snow Criteria** (Pg,Pf in PSF)	**Defl/CSI Criteria**
TCLL: 20.00	Wind Std: ASE 7-22	Pg: NA Ct: NA CAT: NA	PP Deflection in loc L/defl L/#
TCDL: 7.00	Speed: 130 mph	Pf: NA Ce: NA	VERT(LL): 0.009 F 999 360
BCLL: 0.00	Enclosure: Closed	Lu: NA Cs: NA	VERT(CL): 0.016 F 999 240
BCDL: 10.00	Risk Category: II	Snow Duration: NA	HORZ(LL): 0.004 C - -
Des Ld: 37.00	EXP: B Kzt: NA		HORZ(TL): 0.007 C - -
NCBCLL: 10.00	Mean Height: 15.00 ft	Building Code:	Creep Factor: 2.0
Soffit: 2.00	TCDL: 4.2 psf	FBC 8th Ed. 2023 Res.	Max TC CSI: 0.242
Load Duration: 1.25	BCDL: 6.0 psf	TPI Std: 2014	Max BC CSI: 0.846
Spacing: 24.0 "	MWFRS Parallel Dist: 0 to h/2	Rep Fac: Varies by Ld Case	Max Web CSI: 0.267
	C&C Dist a: 3.00 ft	FT/RT:20(0)/0(0)	
	Loc. from endwall: not in 4.50 ft	Plate Type(s):	
	GCpi: 0.18	WAVE	VIEW Ver: 23.02.01A.1204.18
	Wind Duration: 1.60		

▲ Maximum Reactions (lbs)

	Gravity			Non-Gravity		
Loc	R+	/ R-	/ Rh	/ Rw	/ U	/ RL
G	361	/-	/-	/-	/71	/38
E	246	/-	/-	/-	/22	/-
D	47	/-	/-	/-	/6	/-

Wind reactions based on MWFRS
G Brg Wid = 4.2 Min Req = 1.5 (Support)
E Brg Wid = 1.5 Min Req = -
D Brg Wid = 1.5 Min Req = -
Bearing G Fcperp = 425psi.
Members not listed have forces less than 375#

Lumber

Top chord: 2x4 SP #1;
Bot chord: 2x4 SP #1;
Webs: 2x4 SP #3;

Special Loads

------(Lumber Dur.Fac.=1.25 / Plate Dur.Fac.=1.25)

TC: From	1 plf at	-2.99 to	55 plf at	-0.10
TC: From	2 plf at	-0.10 to	2 plf at	7.90
BC: From	0 plf at	-2.99 to	4 plf at	-0.10
BC: From	2 plf at	0.00 to	2 plf at	7.90

TC: 61 lb Conc. Load at 2.26
TC: 199 lb Conc. Load at 5.09
BC: 98 lb Conc. Load at 2.26
BC: 177 lb Conc. Load at 5.09

Plating Notes

Plates sized for a minimum of 3.50 sq.in./piece.

Wind

Wind loads and reactions based on MWFRS.

Left end vertical not exposed to wind pressure.

Wind loading based on both gable and hip roof types.

DOUGLAS FLEMING
LICENSE
No. 66648
STATE OF
FLORIDA
PROFESSIONAL ENGINEER

COA #0 278
Florida Certificate of Product Approval #FL1999
09/04/2024

WARNING READ AND FOLLOW ALL NOTES ON THIS DRAWING!
IMPORTANT FURNISH THIS DRAWING TO ALL CONTRACTORS INCLUDING THE INSTALLERS

Trusses require extreme care in fabricating, handling, shipping, installing and bracing. Refer to and follow the latest edition of BCSI (Building Component Safety Information, by TPI and SBCA) for safety practices prior to performing these functions. Installers shall provide temporary bracing per BCSI. Unless noted otherwise, top chord shall have properly attached structural sheathing and bottom chord shall have a properly attached rigid ceiling. Locations shown for permanent lateral restraint of webs shall have continuous lateral restraint (CLR), installed with diagonal bracing installed on the CLR per BCSI sections B3, B7, or B10, as applicable. Apply plates to each face of truss and position as shown above and on the Joint Details, unless noted otherwise. Refer to drawings 160A-Z for standard plate positions. Refer to job's General Notes page for additional information.

Alpine, a division of ITW Building Components Group Inc. shall not be responsible for any deviation from this drawing, any failure to build the truss in conformance with ANSI/TPI 1, or for handling, shipping, installation and bracing of trusses. A seal on this drawing or cover page listing this drawing, indicates acceptance of professional engineering responsibility solely for the design shown. The suitability and use of this drawing for any structure is the responsibility of the Building Designer per ANSI/TPI 1 Sec.2.

For more information see these web sites: Alpine: alpineitw.com; TPI: tpinst.org; SBCA: sbcacomponents.com; ICC: iccsafe.org; AWC: awc.org

ALPINE
AN ITW COMPANY
155 Harlem Ave
North Building, 4th Floor
Glenview, IL 60025

SEQN: 214665 / HIP_ FROM: RNB	Ply: 1 Qty: 1	**Job Number:** B59525R Perri Residence **Truss Label:** HJ8	Cust: R 857 JRef: 1Y2Y8570005 T36 / DrwNo: 247.24.1014.00708 SSB / DF 09/03/2024

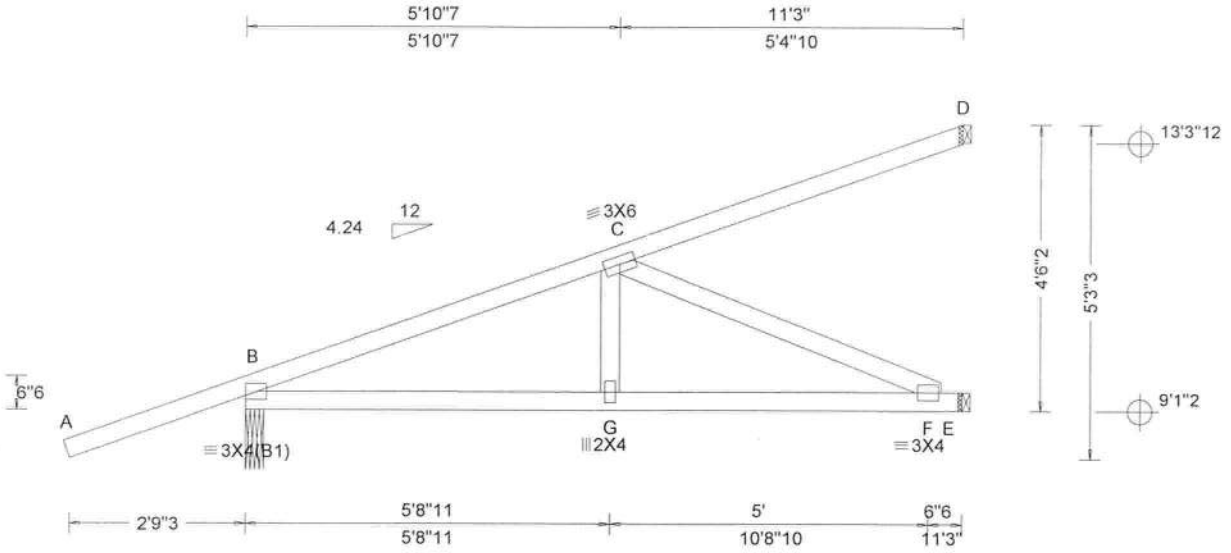

Loading Criteria (psf)	**Wind Criteria**	**Snow Criteria** (Pg,Pf in PSF)	**Defl/CSI Criteria**
TCLL: 20.00	Wind Std: ASCE 7-22	Pg: NA Ct: NA CAT: NA	PP Deflection in loc L/defl L/#
TCDL: 7.00	Speed: 130 mph	Pf: NA Ce: NA	VERT(LL): 0.043 G 999 360
BCLL: 0.00	Enclosure: Closed	Lu: NA Cs: NA	VERT(CL): 0.080 G 999 240
BCDL: 10.00	Risk Category: II	Snow Duration: NA	HORZ(LL): -0.010 D - -
Des Ld: 37.00	EXP: B Kzt: NA		HORZ(TL): 0.018 D - -
NCBCLL: 10.00	Mean Height: 15.00 ft	Building Code:	Creep Factor: 2.0
Soffit: 2.00	TCDL: 4.2 psf	FBC 8th Ed. 2023 Res.	Max TC CSI: 0.668
Load Duration: 1.25	BCDL: 6.0 psf	TPI Std: 2014	Max BC CSI: 0.730
Spacing: 24.0 "	MWFRS Parallel Dist: 0 to h/2	Rep Fac: Varies by Ld Case	Max Web CSI: 0.539
	C&C Dist a: 3.00 ft	FT/RT:20(0)/0(0)	
	Loc. from endwall: not in 4.50 ft	Plate Type(s):	
	GCpi: 0.18	WAVE	VIEW Ver: 23.02.01A.1204.18
	Wind Duration: 1.60		

▲ Maximum Reactions (lbs)

	Gravity			Non-Gravity		
Loc	R+	/ R-	/ Rh	/ Rw	/ U	/ RL
B	430	/-	/-	/-	/72	/-
E	407	/-	/-	/-	/13	/-
D	111	/-	/-	/-	/28	/-

Wind reactions based on MWFRS
B Brg Wid = 3.5 Min Req = 1.5 (Support)
E Brg Wid = 1.5 Min Req = -
D Brg Wid = 1.5 Min Req = -
Bearing B Fcperp = 425psi.
Members not listed have forces less than 375#

Maximum Top Chord Forces Per Ply (lbs)

Chords	Tens.	Comp.
B - C	93	- 832

Maximum Bot Chord Forces Per Ply (lbs)

Chords	Tens.	Comp.	Chords	Tens.	Comp.
B - G	779	- 80	G - F	765	- 84

Maximum Web Forces Per Ply (lbs)

Webs	Tens.	Comp.
C - F	92	- 839

Lumber

Top chord: 2x4 SP #1;
Bot chord: 2x4 SP #1;
Webs: 2x4 SP #3;

Special Loads

------(Lumber Dur.Fac.=1.25 / Plate Dur.Fac.=1.25)

TC: From	1 plf at	-2.93 to	55 plf at	-0.10	
TC: From	2 plf at	-0.10 to	2 plf at	11.25	
BC: From	0 plf at	-2.93 to	4 plf at	-0.10	
BC: From	2 plf at	0.00 to	2 plf at	11.25	

TC: -13 lb Conc. Load at 2.62
TC: 147 lb Conc. Load at 5.44
TC: 271 lb Conc. Load at 8.27
BC: 58 lb Conc. Load at 2.62
BC: 138 lb Conc. Load at 5.44
BC: 216 lb Conc. Load at 8.27

Plating Notes

Plates sized for a minimum of 3.50 sq.in./piece.

Wind

Wind loads and reactions based on MWFRS.

Wind loading based on both gable and hip roof types.

DOUGLAS FLEMING
LICENSE
No. 66648
STATE OF
FLORIDA
PROFESSIONAL ENGINEER

COA #0 278
Florida Certificate of Product Approval #FL1999
09/04/2024

WARNING READ AND FOLLOW ALL NOTES ON THIS DRAWING!
IMPORTANT FURNISH THIS DRAWING TO ALL CONTRACTORS INCLUDING THE INSTALLERS

Trusses require extreme care in fabricating, handling, shipping, installing and bracing. Refer to and follow the latest edition of BCSI (Building Component Safety Information, by TPI and SBCA) for safety practices prior to performing these functions. Installers shall provide temporary bracing per BCSI. Unless noted otherwise, top chord shall have properly attached structural sheathing and bottom chord shall have a properly attached rigid ceiling. Locations shown for permanent lateral restraint of webs shall have continuous lateral restraint (CLR), installed with diagonal bracing installed on the CLR per BCSI sections B3, B7, or B10, as applicable. Apply plates to each face of truss and position as shown above and on the Joint Details, unless noted otherwise. Refer to drawings 160A-Z for standard plate positions. Refer to job's General Notes page for additional information.

Alpine, a division of ITW Building Components Group Inc. shall not be responsible for any deviation from this drawing, any failure to build the truss in conformance with ANSI/TPI 1, or for handling, shipping, installation and bracing of trusses. A seal on this drawing or cover page listing this drawing, indicates acceptance of professional engineering responsibility solely for the design shown. The suitability and use of this drawing for any structure is the responsibility of the Building Designer per ANSI/TPI 1 Sec.2.

For more information see these web sites: Alpine: alpineitw.com; TPI: tpinst.org; SBCA: sbcacomponents.com; ICC: iccsafe.org; AWC: awc.org

ALPINE
AN ITW COMPANY
155 Harlem Ave
North Building, 4th Floor
Glenview, IL 60025

SEQN: 214573 / HIP_ FROM: RNB	Ply: 1 Qty: 1	Job Number: B59525R Perri Residence Truss Label: HJ21	Cust: R 857 JRef: 1Y2Y8570005 T41 / DrwNo: 247.24.1013.58176 SSB / DF 09/03/2024

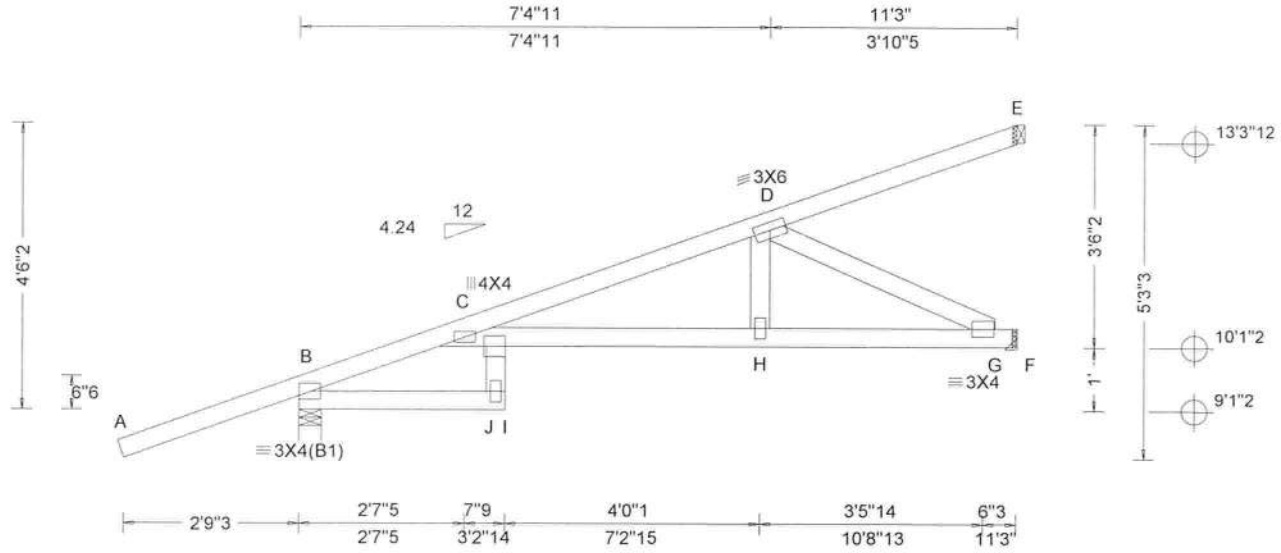

Loading Criteria (psf)

TCLL:	20.00
TCDL:	7.00
BCLL:	0.00
BCDL:	10.00
Des Ld:	37.00
NCBCLL:	10.00
Soffit:	2.00

Load Duration: 1.25
Spacing: 24.0 "

Wind Criteria
Wind Std: ASCE 7-22
Speed: 130 mph
Enclosure: Closed
Risk Category: II
EXP: B Kzt: NA
Mean Height: 15.00 ft
TCDL: 4.2 psf
BCDL: 6.0 psf
MWFRS Parallel Dist: 0 to h/2
C&C Dist a: 3.00 ft
Loc. from endwall: not in 4.50 ft
GCpi: 0.18
Wind Duration: 1.60

Snow Criteria (Pg,Pf in PSF)
Pg: NA Ct: NA CAT: NA
Pf: NA Ce: NA
Lu: NA Cs: NA
Snow Duration: NA

Building Code:
FBC 8th Ed. 2023 Res.
TPI Std: 2014
Rep Fac: Varies by Ld Case
FT/RT:20(0)/0(0)
Plate Type(s):
WAVE

Defl/CSI Criteria

PP Deflection in	loc	L/defl	L/#
VERT(LL):	0.286 I	468	360
VERT(CL):	0.537 I	249	240
HORZ(LL):	0.124 G	-	-
HORZ(TL):	0.234 G	-	-

Creep Factor: 2.0
Max TC CSI: 0.854
Max BC CSI: 0.422
Max Web CSI: 0.491

VIEW Ver: 23.02.01A.1204.18

▲ Maximum Reactions (lbs)

	Gravity			Non-Gravity		
Loc	R+	/ R-	/ Rh	/ Rw	/ U	/ RL
B	416	/-	/-	/-	/56	/-
F	501	/-	/-	/-	/21	/-
E	15	/-2	/-	/-	/2	/-

Wind reactions based on MWFRS
B Brg Wid = 4.2 Min Req = 1.5 (Support)
F Brg Wid = 1.5 Min Req = -
E Brg Wid = 1.5 Min Req = -
Bearing B Fcperp = 425psi.
Members not listed have forces less than 375#

Maximum Top Chord Forces Per Ply (lbs)

Chords	Tens.	Comp.
C - D	78	-1052

Maximum Bot Chord Forces Per Ply (lbs)

Chords	Tens.	Comp.	Chords	Tens.	Comp.
C - J	873	-36	H - G	1010	-65
J - H	1027	-62			

Maximum Web Forces Per Ply (lbs)

Webs	Tens.	Comp.
D - G	73	-1134

Lumber

Top chord: 2x4 SP #1;
Bot chord: 2x4 SP #1;
Webs: 2x4 SP #3;

Special Loads

------(Lumber Dur.Fac.=1.25 / Plate Dur.Fac.=1.25)

TC: From	1 plf at	-2.93 to	55 plf at	-0.10	
TC: From	2 plf at	-0.10 to	2 plf at	11.25	
BC: From	0 plf at	-2.93 to	4 plf at	-0.10	
BC: From	2 plf at	0.00 to	2 plf at	11.25	

TC: -8 lb Conc. Load at 2.79
TC: 167 lb Conc. Load at 5.62
TC: 289 lb Conc. Load at 8.45
BC: 63 lb Conc. Load at 2.79
BC: 104 lb Conc. Load at 5.62
BC: 185 lb Conc. Load at 8.45

Plating Notes

All plates are 2X4 except as noted.

Plates sized for a minimum of 3.50 sq.in./piece.

Wind

Wind loads and reactions based on MWFRS.

Wind loading based on both gable and hip roof types.

DOUGLAS FLEMING LICENSE No. 66648 STATE OF FLORIDA PROFESSIONAL ENGINEER

COA #0 278
Florida Certificate of Product Approval #FL1999
09/04/2024

WARNING READ AND FOLLOW ALL NOTES ON THIS DRAWING!
IMPORTANT FURNISH THIS DRAWING TO ALL CONTRACTORS INCLUDING THE INSTALLERS

Trusses require extreme care in fabricating, handling, shipping, installing and bracing. Refer to and follow the latest edition of BCSI (Building Component Safety Information, by TPI and SBCA) for safety practices prior to performing these functions. Installers shall provide temporary bracing per BCSI. Unless noted otherwise, top chord shall have properly attached structural sheathing and bottom chord shall have a properly attached rigid ceiling. Locations shown for permanent lateral restraint of webs shall have continuous lateral restraint (CLR), installed with diagonal bracing installed on the CLR per BCSI sections B3, B7, or B10, as applicable. Apply plates to each face of truss and position as shown above and on the Joint Details, unless noted otherwise. Refer to drawings 160A-Z for standard plate positions. Refer to job's General Notes page for additional information.

Alpine, a division of ITW Building Components Group Inc. shall not be responsible for any deviation from this drawing, any failure to build the truss in conformance with ANSI/TPI 1, or for handling, shipping, installation and bracing of trusses. A seal on this drawing or cover page listing this drawing, indicates acceptance of professional engineering responsibility solely for the design shown. The suitability and use of this drawing for any structure is the responsibility of the Building Designer per ANSI/TPI 1 Sec.2.

For more information see these web sites: Alpine: alpineitw.com; TPI: tpinst.org; SBCA: sbcacomponents.com; ICC: iccsafe.org; AWC: awc.org

ALPINE AN ITW COMPANY
155 Harlem Ave
North Building, 4th Floor
Glenview, IL 60025

SEQN: 214675 / HIPS FROM: RNB	Ply: 1 Qty: 1	**Job Number:** B59525R Perri Residence **Truss Label:** HT3	Cust: R 857 JRef: 1Y2Y8570005 T24 / DrwNo: 247.24.1014.00474 SSB / DF 09/03/2024

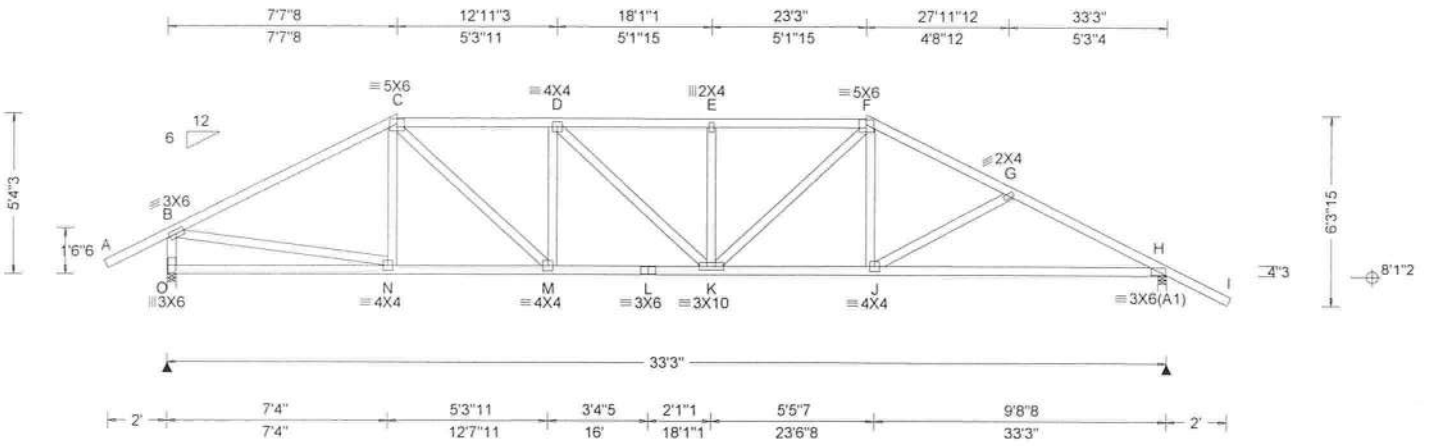

Loading Criteria (psf)

TCLL:	20.00
TCDL:	7.00
BCLL:	0.00
BCDL:	10.00
Des Ld:	37.00
NCBCLL:	10.00
Soffit:	2.00

Load Duration: 1.25
Spacing: 24.0 "

Wind Criteria
Wind Std: ASCE 7-22
Speed: 130 mph
Enclosure: Closed
Risk Category: II
EXP: B Kzt: NA
Mean Height: 15.00 ft
TCDL: 4.2 psf
BCDL: 6.0 psf
MWFRS Parallel Dist: h/2 to h
C&C Dist a: 3.33 ft
Loc. from endwall: not in 9.00 ft
GCpi: 0.18
Wind Duration: 1.60

Snow Criteria (Pg,Pf in PSF)
Pg: NA Ct: NA CAT: NA
Pf: NA Ce: NA
Lu: NA Cs: NA
Snow Duration: NA

Building Code:
FBC 8th Ed. 2023 Res.
TPI Std: 2014
Rep Fac: Yes
FT/RT:20(0)/0(0)
Plate Type(s):
WAVE

Defl/CSI Criteria

PP Deflection in	loc	L/defl	L/#
VERT(LL): 0.122	E	999	360
VERT(CL): 0.226	E	999	240
HORZ(LL): 0.036	H	-	-
HORZ(TL): 0.067	H	-	-

Creep Factor: 2.0
Max TC CSI: 0.642
Max BC CSI: 0.615
Max Web CSI: 0.559

VIEW Ver: 23.02.01A.1204.18

▲ Maximum Reactions (lbs)

Loc	Gravity R+	Gravity / R-	/ Rh	Non-Gravity / Rw	/ U	/ RL
O	1376	/-	/-	/704	/67	/158
H	1388	/-	/-	/734	/70	/-

Wind reactions based on MWFRS
O Brg Wid = 3.5 Min Req = 1.7 (Support)
H Brg Wid = 3.5 Min Req = 1.7 (Support)
Bearings O & H Fcperp = 425psi.
Members not listed have forces less than 375#

Maximum Top Chord Forces Per Ply (lbs)

Chords	Tens.	Comp.	Chords	Tens.	Comp.
B - C	405	- 1763	E - F	561	- 2095
C - D	539	- 1983	F - G	452	- 2019
D - E	560	- 2093	G - H	478	- 2267

Maximum Bot Chord Forces Per Ply (lbs)

Chords	Tens.	Comp.	Chords	Tens.	Comp.
N - M	1506	- 259	K - J	1749	- 276
M - L	2003	- 389	J - H	1970	- 347
L - K	2003	- 389			

Maximum Web Forces Per Ply (lbs)

Webs	Tens.	Comp.	Webs	Tens.	Comp.
B - O	333	- 1311	K - F	478	- 196
B - N	1469	- 272	F - J	375	0
C - M	669	- 206			

Lumber

Top chord: 2x4 SP #1;
Bot chord: 2x4 SP #1;
Webs: 2x4 SP #3;

Plating Notes

Plates sized for a minimum of 3.50 sq.in./piece.

Purlins

In lieu of structural panels use purlins to brace all flat TC @ 24" oc.

Wind

Wind loads based on MWFRS with additional C&C member design.

Left end vertical not exposed to wind pressure.

Wind loading based on both gable and hip roof types.

DOUGLAS FLEMING
LICENSE
No. 66648
STATE OF
FLORIDA
PROFESSIONAL ENGINEER

COA #0 278
Florida Certificate of Product Approval #FL1999
09/04/2024

WARNING READ AND FOLLOW ALL NOTES ON THIS DRAWING!
IMPORTANT FURNISH THIS DRAWING TO ALL CONTRACTORS INCLUDING THE INSTALLERS

Trusses require extreme care in fabricating, handling, shipping, installing and bracing. Refer to and follow the latest edition of BCSI (Building Component Safety Information, by TPI and SBCA) for safety practices prior to performing these functions. Installers shall provide temporary bracing per BCSI. Unless noted otherwise, top chord shall have properly attached structural sheathing and bottom chord shall have a properly attached rigid ceiling. Locations shown for permanent lateral restraint of webs shall have continuous lateral restraint (CLR), installed with diagonal bracing installed on the CLR per BCSI sections B3, B7, or B10, as applicable. Apply plates to each face of truss and position as shown above and on the Joint Details, unless noted otherwise. Refer to drawings 160A-Z for standard plate positions. Refer to job's General Notes page for additional information.

Alpine, a division of ITW Building Components Group Inc. shall not be responsible for any deviation from this drawing, any failure to build the truss in conformance with ANSI/TPI 1, or for handling, shipping, installation and bracing of trusses. A seal on this drawing or cover page listing this drawing, indicates acceptance of professional engineering responsibility solely for the design shown. The suitability and use of this drawing for any structure is the responsibility of the Building Designer per ANSI/TPI 1 Sec.2.

For more information see these web sites: Alpine: alpineitw.com; TPI: tpinst.org; SBCA: sbcacomponents.com; ICC: iccsafe.org; AWC: awc.org

ALPINE
AN ITW COMPANY
155 Harlem Ave
North Building, 4th Floor
Glenview, IL 60025

SEQN: 214691 / SPEC FROM: RNB	Ply: 1 Qty: 1	**Job Number:** B59525R Perri Residence **Truss Label:** HT4	Cust: R 857 JRef: 1Y2Y8570005 T5 / DrwNo: 247.24.1014.00068 SSB / DF 09/03/2024

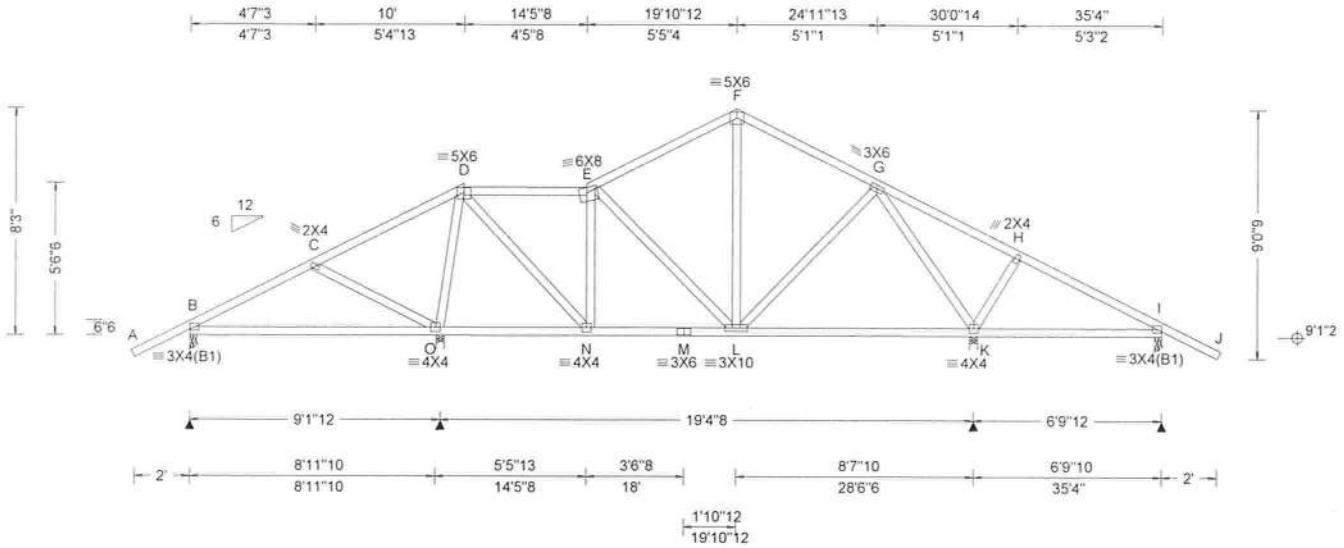

Loading Criteria (psf)

TCLL:	20.00
TCDL:	7.00
BCLL:	0.00
BCDL:	10.00
Des Ld:	37.00
NCBCLL:	10.00
Soffit:	2.00

Load Duration: 1.25
Spacing: 24.0 "

Wind Criteria
Wind Std: ASCE 7-22
Speed: 130 mph
Enclosure: Closed
Risk Category: II
EXP: B Kzt: NA
Mean Height: 15.00 ft
TCDL: 4.2 psf
BCDL: 6.0 psf
MWFRS Parallel Dist: h to 2h
C&C Dist a: 3.53 ft
Loc. from endwall: not in 9.00 ft
GCpi: 0.18
Wind Duration: 1.60

Snow Criteria (Pg,Pf in PSF)
Pg: NA Ct: NA CAT: NA
Pf: NA Ce: NA
Lu: NA Cs: NA
Snow Duration: NA

Building Code:
FBC 8th Ed. 2023 Res.
TPI Std: 2014
Rep Fac: Yes
FT/RT:20(0)/0(0)
Plate Type(s):
WAVE

Defl/CSI Criteria

PP Deflection in	loc	L/defl	L/#
VERT(LL): 0.020	E	999	360
VERT(CL): 0.038	E	999	240
HORZ(LL): 0.005	K	-	-
HORZ(TL): 0.010	K	-	-

Creep Factor: 2.0
Max TC CSI: 0.205
Max BC CSI: 0.448
Max Web CSI: 0.692

VIEW Ver: 23.02.01A.1204.18

▲ Maximum Reactions (lbs)

	Gravity			Non-Gravity		
Loc	R+	/ R-	/ Rh	/ Rw	/ U	/ RL
B	486	/-	/-	/286	/-	/174
O	1041	/-	/-	/538	/-	/-
K	1103	/-	/-	/602	/-	/-
I	348	/-	/-	/202	/3	/-

Wind reactions based on MWFRS
B Brg Wid = 3.0 Min Req = 1.5 (Support)
O Brg Wid = 3.5 Min Req = 1.5 (Truss)
K Brg Wid = 3.5 Min Req = 1.5 (Truss)
I Brg Wid = 3.0 Min Req = 1.5 (Support)
Bearings B, O, K, & I Fcperp = 425psi.
Members not listed have forces less than 375#

Maximum Top Chord Forces Per Ply (lbs)

Chords	Tens.	Comp.	Chords	Tens.	Comp.
D - E	83	-588	F - G	102	-568
E - F	112	-574			

Maximum Bot Chord Forces Per Ply (lbs)

Chords	Tens.	Comp.	Chords	Tens.	Comp.
O - N	550	0	M - L	588	0
N - M	588	0			

Maximum Web Forces Per Ply (lbs)

Webs	Tens.	Comp.	Webs	Tens.	Comp.
O - D	253	-722	E - N	138	-397
D - N	580	-115	G - K	119	-844

Lumber
Top chord: 2x4 SP #1;
Bot chord: 2x4 SP #1;
Webs: 2x4 SP #3;

Plating Notes
Plates sized for a minimum of 3.50 sq.in./piece.

Purlins
In lieu of structural panels use purlins to brace all flat TC @ 24" oc.

Wind
Wind loads based on MWFRS with additional C&C member design.
Wind loading based on both gable and hip roof types.

DOUGLAS FLEMING
LICENSE
No. 66648
STATE OF
FLORIDA
PROFESSIONAL ENGINEER

COA #0 278
Florida Certificate of Product Approval #FL1999
09/04/2024

WARNING READ AND FOLLOW ALL NOTES ON THIS DRAWING!
IMPORTANT FURNISH THIS DRAWING TO ALL CONTRACTORS INCLUDING THE INSTALLERS

Trusses require extreme care in fabricating, handling, shipping, installing and bracing. Refer to and follow the latest edition of BCSI (Building Component Safety Information, by TPI and SBCA) for safety practices prior to performing these functions. Installers shall provide temporary bracing per BCSI. Unless noted otherwise, top chord shall have properly attached structural sheathing and bottom chord shall have a properly attached rigid ceiling. Locations shown for permanent lateral restraint of webs shall have continuous lateral restraint (CLR), installed with diagonal bracing installed on the CLR per BCSI sections B3, B7, or B10, as applicable. Apply plates to each face of truss and position as shown above and on the Joint Details, unless noted otherwise. Refer to drawings 160A-Z for standard plate positions. Refer to job's General Notes page for additional information.

Alpine, a division of ITW Building Components Group Inc. shall not be responsible for any deviation from this drawing, any failure to build the truss in conformance with ANSI/TPI 1, or for handling, shipping, installation and bracing of trusses. A seal on this drawing or cover page listing this drawing, indicates acceptance of professional engineering responsibility solely for the design shown. The suitability and use of this drawing for any structure is the responsibility of the Building Designer per ANSI/TPI 1 Sec.2.

For more information see these web sites: Alpine: alpineitw.com; TPI: tpinst.org; SBCA: sbcacomponents.com; ICC: iccsafe.org; AWC: awc.org

ALPINE
AN ITW COMPANY
155 Harlem Ave
North Building, 4th Floor
Glenview, IL 60025

SEQN: 214678 / HIPS FROM: RNB	Ply: 1 Qty: 1	**Job Number:** B59525R Perri Residence **Truss Label:** HT5	Cust: R 857 JRef: 1Y2Y8570005 T26 / DrwNo: 247.24.1013.59145 SSB / DF 09/03/2024

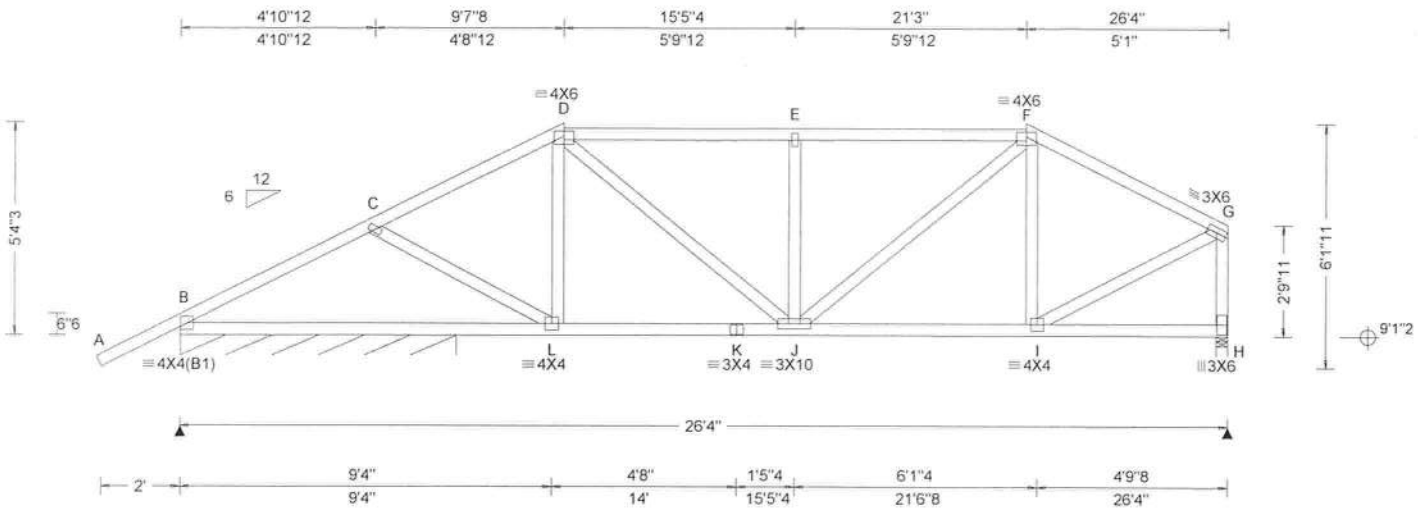

Loading Criteria (psf)	**Wind Criteria**	**Snow Criteria** (Pg,Pf in PSF)	**Defl/CSI Criteria**
TCLL: 20.00 TCDL: 7.00 BCLL: 0.00 BCDL: 10.00 Des Ld: 37.00 NCBCLL: 10.00 Soffit: 2.00 Load Duration: 1.25 Spacing: 24.0 "	Wind Std: ASCE 7-22 Speed: 130 mph Enclosure: Closed Risk Category: II EXP: B Kzt: NA Mean Height: 15.00 ft TCDL: 4.2 psf BCDL: 6.0 psf MWFRS Parallel Dist: h/2 to h C&C Dist a: 3.00 ft Loc. from endwall: not in 9.00 ft GCpi: 0.18 Wind Duration: 1.60	Pg: NA Ct: NA CAT: NA Pf: NA Ce: NA Lu: NA Cs: NA Snow Duration: NA Building Code: FBC 8th Ed. 2023 Res. TPI Std: 2014 Rep Fac: Yes FT/RT:20(0)/0(0) Plate Type(s): WAVE	PP Deflection in loc L/defl L/# VERT(LL): 0.061 L 999 360 VERT(CL): 0.114 L 999 240 HORZ(LL): 0.021 H - - HORZ(TL): 0.039 H - - Creep Factor: 2.0 Max TC CSI: 0.447 Max BC CSI: 0.393 Max Web CSI: 0.334 VIEW Ver: 23.02.01A.1204.18

▲ Maximum Reactions (lbs), or *=PLF

	Gravity			Non-Gravity		
Loc	R+	/ R-	/ Rh	/ Rw	/ U	/ RL
B*	168	/-	/-	/92	/6	/20
H	946	/-	/-	/443	/52	/-

Wind reactions based on MWFRS
B Brg Wid = 83.5 Min Req = -
H Brg Wid = 3.5 Min Req = 1.5 (Support)
Bearings B & H Fcperp = 425psi.
Members not listed have forces less than 375#

Maximum Top Chord Forces Per Ply (lbs)

Chords	Tens.	Comp.	Chords	Tens.	Comp.
B - C	428	- 1457	E - F	471	- 1235
C - D	413	- 1240	F - G	303	- 927
D - E	471	- 1235			

Maximum Bot Chord Forces Per Ply (lbs)

Chords	Tens.	Comp.	Chords	Tens.	Comp.
B - L	2452	- 920	K - J	1066	- 397
L - K	1066	- 397	J - I	803	- 269

Maximum Web Forces Per Ply (lbs)

Webs	Tens.	Comp.	Webs	Tens.	Comp.
J - F	565	- 231	G - H	265	- 906
I - G	876	- 259			

Lumber

Top chord: 2x4 SP #1;
Bot chord: 2x4 SP #1;
Webs: 2x4 SP #3;

Plating Notes

All plates are 2X4 except as noted.

Plates sized for a minimum of 3.50 sq.in./piece.

Purlins

In lieu of structural panels use purlins to brace all flat TC @ 24" oc.

Wind

Wind loads based on MWFRS with additional C&C member design.

Right end vertical not exposed to wind pressure.

Wind loading based on both gable and hip roof types.

DOUGLAS FLEMING
LICENSE
No. 66648
STATE OF
FLORIDA
PROFESSIONAL ENGINEER

COA #0 278
Florida Certificate of Product Approval #FL1999
09/04/2024

****WARNING**** READ AND FOLLOW ALL NOTES ON THIS DRAWING!
****IMPORTANT**** FURNISH THIS DRAWING TO ALL CONTRACTORS INCLUDING THE INSTALLERS

Trusses require extreme care in fabricating, handling, shipping, installing and bracing. Refer to and follow the latest edition of BCSI (Building Component Safety Information, by TPI and SBCA) for safety practices prior to performing these functions. Installers shall provide temporary bracing per BCSI. Unless noted otherwise, top chord shall have properly attached structural sheathing and bottom chord shall have a properly attached rigid ceiling. Locations shown for permanent lateral restraint of webs shall have continuous lateral restraint (CLR), installed with diagonal bracing installed on the CLR per BCSI sections B3, B7, or B10, as applicable. Apply plates to each face of truss and position as shown above and on the Joint Details, unless noted otherwise. Refer to drawings 160A-Z for standard plate positions. Refer to job's General Notes page for additional information.

Alpine, a division of ITW Building Components Group Inc. shall not be responsible for any deviation from this drawing, any failure to build the truss in conformance with ANSI/TPI 1, or for handling, shipping, installation and bracing of trusses. A seal on this drawing or cover page listing this drawing, indicates acceptance of professional engineering responsibility solely for the design shown. The suitability and use of this drawing for any structure is the responsibility of the Building Designer per ANSI/TPI 1 Sec.2.

For more information see these web sites: Alpine: alpineitw.com; TPI: tpinst.org; SBCA: sbcacomponents.com; ICC: iccsafe.org; AWC: awc.org

ALPINE
AN ITW COMPANY
155 Harlem Ave
North Building, 4th Floor
Glenview, IL 60025

SEQN: 214697 / SPEC FROM: RNB	Ply: 1 Qty: 1	**Job Number:** B59525R Perri Residence **Truss Label:** HT6	Cust: R 857 JRef: 1Y2Y8570005 T14 / DrwNo: 247.24.1013.59771 SSB / DF 09/03/2024

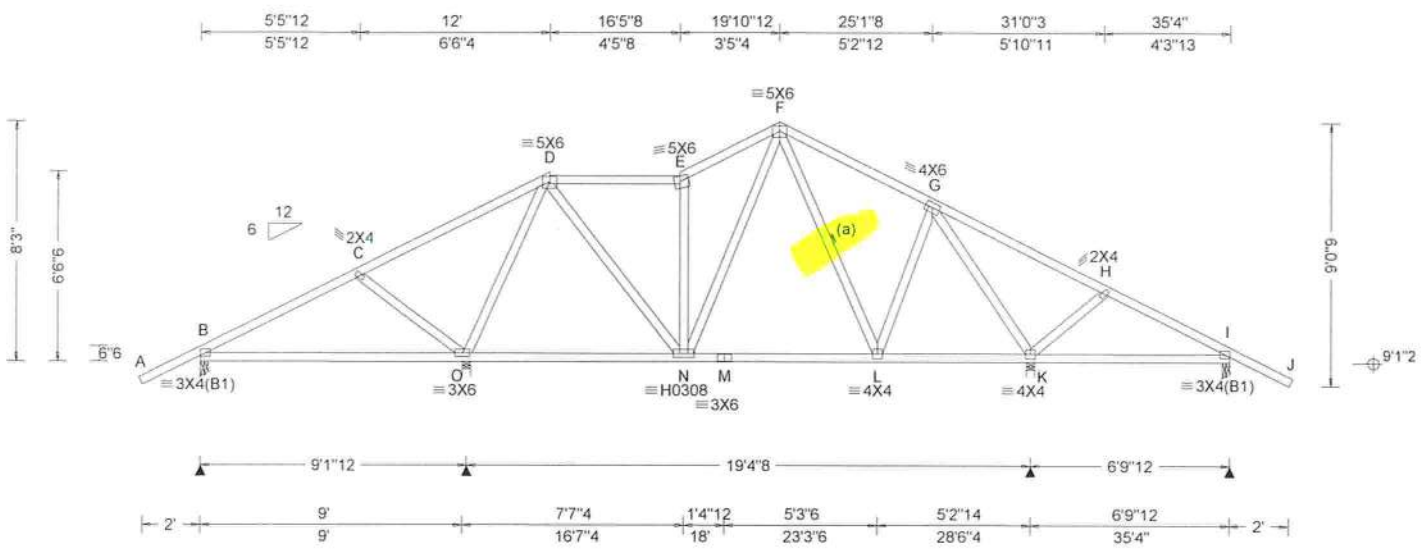

Loading Criteria (psf)	**Wind Criteria**	**Snow Criteria** (Pg,Pf in PSF)	**Defl/CSI Criteria**
TCLL: 20.00	Wind Std: ASCE 7-22	Pg: NA Ct: NA CAT: NA	PP Deflection in loc L/defl L/#
TCDL: 7.00	Speed: 130 mph	Pf: NA Ce: NA	VERT(LL): 0.022 E 999 360
BCLL: 0.00	Enclosure: Closed	Lu: NA Cs: NA	VERT(CL): 0.041 E 999 240
BCDL: 10.00	Risk Category: II	Snow Duration: NA	HORZ(LL): 0.005 D - -
Des Ld: 37.00	EXP: B Kzt: NA		HORZ(TL): 0.010 D - -
NCBCLL: 10.00	Mean Height: 15.00 ft	Building Code:	Creep Factor: 2.0
Soffit: 2.00	TCDL: 4.2 psf	FBC 8th Ed. 2023 Res.	Max TC CSI: 0.279
Load Duration: 1.25	BCDL: 6.0 psf	TPI Std: 2014	Max BC CSI: 0.472
Spacing: 24.0 "	MWFRS Parallel Dist: h to 2h	Rep Fac: Yes	Max Web CSI: 0.734
	C&C Dist a: 3.53 ft	FT/RT:20(0)/0(0)	
	Loc. from endwall: not in 9.00 ft	Plate Type(s):	
	GCpi: 0.18	WAVE, HS	VIEW Ver: 23.02.01A.1204.18
	Wind Duration: 1.60		

▲ Maximum Reactions (lbs)

Loc	Gravity R+	/ R-	/ Rh	Non-Gravity / Rw	/ U	/ RL
B	486	/-	/-	/283	/-	/174
O	1049	/-	/-	/555	/-	/-
K	1098	/-	/-	/590	/-	/-
I	342	/-	/-	/210	/-	/-

Wind reactions based on MWFRS
B Brg Wid = 3.0 Min Req = 1.5 (Support)
O Brg Wid = 3.5 Min Req = 1.5 (Truss)
K Brg Wid = 3.5 Min Req = 1.5 (Truss)
I Brg Wid = 3.0 Min Req = 1.5 (Support)
Bearings B, O, K, & I Fcperp = 425psi.
Members not listed have forces less than 375#

Maximum Top Chord Forces Per Ply (lbs)

Chords	Tens.	Comp.	Chords	Tens.	Comp.
D - E	112	- 550	F - G	122	- 526
E - F	157	- 646			

Maximum Bot Chord Forces Per Ply (lbs)

Chords	Tens.	Comp.	Chords	Tens.	Comp.
O - N	656	0	M - L	419	0
N - M	419	0			

Maximum Web Forces Per Ply (lbs)

Webs	Tens.	Comp.	Webs	Tens.	Comp.
O - D	249	- 719	E - N	172	- 471
D - N	391	- 64	G - K	165	- 934

Lumber

Top chord: 2x4 SP #1;
Bot chord: 2x4 SP #1;
Webs: 2x4 SP #3;

Bracing

(a) Continuous lateral restraint equally spaced on member. Or 1x4 #3SRB SPF-S or better "T" reinforcement. 80% length of web member. Attached with 8d Box or Gun (0.113"x2.5",min.)nails @ 6" oc.

Plating Notes

Plates sized for a minimum of 3.50 sq.in./piece.

Purlins

In lieu of structural panels use purlins to brace all flat TC @ 24" oc.

Wind

Wind loads based on MWFRS with additional C&C member design.

Wind loading based on both gable and hip roof types.

DOUGLAS FLEMING
LICENSE
No. 66648
STATE OF
FLORIDA
PROFESSIONAL ENGINEER

COA #0 278
Florida Certificate of Product Approval #FL1999
09/04/2024

WARNING READ AND FOLLOW ALL NOTES ON THIS DRAWING!
IMPORTANT FURNISH THIS DRAWING TO ALL CONTRACTORS INCLUDING THE INSTALLERS

Trusses require extreme care in fabricating, handling, shipping, installing and bracing. Refer to and follow the latest edition of BCSI (Building Component Safety Information, by TPI and SBCA) for safety practices prior to performing these functions. Installers shall provide temporary bracing per BCSI. Unless noted otherwise, top chord shall have properly attached structural sheathing and bottom chord shall have a properly attached rigid ceiling. Locations shown for permanent lateral restraint of webs shall have continuous lateral restraint (CLR), installed with diagonal bracing installed on the CLR per BCSI sections B3, B7, or B10, as applicable. Apply plates to each face of truss and position as shown above and on the Joint Details, unless noted otherwise. Refer to drawings 160A-Z for standard plate positions. Refer to job's General Notes page for additional information.

Alpine, a division of ITW Building Components Group Inc. shall not be responsible for any deviation from this drawing, any failure to build the truss in conformance with ANSI/TPI 1, or for handling, shipping, installation and bracing of trusses. A seal on this drawing or cover page listing this drawing, indicates acceptance of professional engineering responsibility solely for the design shown. The suitability and use of this drawing for any structure is the responsibility of the Building Designer per ANSI/TPI 1 Sec.2.

For more information see these web sites: Alpine: alpineitw.com; TPI: tpinst.org; SBCA: sbcacomponents.com; ICC: iccsafe.org; AWC: awc.org

ALPINE
AN ITW COMPANY
155 Harlem Ave
North Building, 4th Floor
Glenview, IL 60025

SEQN: 214702 / SPEC FROM: RNB	Ply: 1 Qty: 1	**Job Number:** B59525R Perri Residence **Truss Label:** HT8	Cust: R 857 JRef: 1Y2Y8570005 T28 / DrwNo: 247.24.1013.58129 SSB / DF 09/03/2024

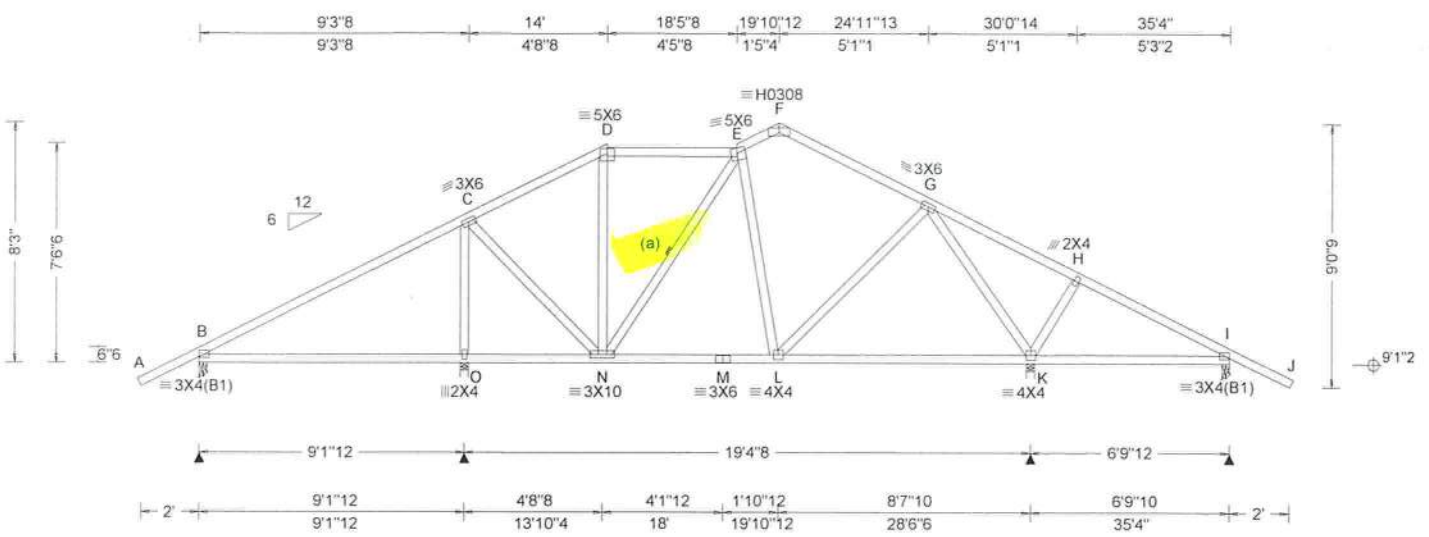

Loading Criteria (psf)	Wind Criteria	Snow Criteria (Pg,Pf in PSF)	Defl/CSI Criteria
TCLL: 20.00 TCDL: 7.00 BCLL: 0.00 BCDL: 10.00 Des Ld: 37.00 NCBCLL: 10.00 Soffit: 2.00 Load Duration: 1.25 Spacing: 24.0 "	Wind Std: ASCE 7-22 Speed: 130 mph Enclosure: Closed Risk Category: II EXP: B Kzt: NA Mean Height: 15.00 ft TCDL: 4.2 psf BCDL: 6.0 psf MWFRS Parallel Dist: h to 2h C&C Dist a: 3.53 ft Loc. from endwall: not in 9.00 ft GCpi: 0.18 Wind Duration: 1.60	Pg: NA Ct: NA CAT: NA Pf: NA Ce: NA Lu: NA Cs: NA Snow Duration: NA Building Code: FBC 8th Ed. 2023 Res. TPI Std: 2014 Rep Fac: Yes FT/RT:20(0)/0(0) Plate Type(s): WAVE, HS	PP Deflection in loc L/defl L/# VERT(LL): 0.040 L 999 360 VERT(CL): 0.070 L 999 240 HORZ(LL): -0.021 G - - HORZ(TL): 0.044 G - - Creep Factor: 2.0 Max TC CSI: 0.602 Max BC CSI: 0.473 Max Web CSI: 0.857 VIEW Ver: 23.02.01A.1204.18

▲ Maximum Reactions (lbs)

	Gravity			Non-Gravity		
Loc	R+	/ R-	/ Rh	/ Rw	/ U	/ RL
B	543	/-	/-	/267	/-	/174
O	981	/-	/-	/541	/-	/-
K	1304	/-	/-	/702	/-	/-
I	255	/-63	/-	/114	/39	/-

Wind reactions based on MWFRS
B Brg Wid = 3.0 Min Req = 1.5 (Support)
O Brg Wid = 3.5 Min Req = 1.5 (Truss)
K Brg Wid = 3.5 Min Req = 1.6 (Support)
I Brg Wid = 3.0 Min Req = 1.5 (Support)
Bearings B, O, K, & I Fcperp = 425psi.
Members not listed have forces less than 375#

Maximum Top Chord Forces Per Ply (lbs)

Chords	Tens.	Comp.	Chords	Tens.	Comp.
C - D	125	-444	G - H	539	-134
F - G	127	-464	H - I	403	-150

Maximum Bot Chord Forces Per Ply (lbs)

Chords	Tens.	Comp.	Chords	Tens.	Comp.
N - M	381	0	M - L	381	0

Maximum Web Forces Per Ply (lbs)

Webs	Tens.	Comp.	Webs	Tens.	Comp.
O - C	216	-784	G - K	218	-1045
C - N	461	-45			

Lumber

Top chord: 2x4 SP #1;
Bot chord: 2x4 SP #1;
Webs: 2x4 SP #3;

Bracing

(a) Continuous lateral restraint equally spaced on member. Or 1x4 #3SRB SPF-S or better "T" reinforcement. 80% length of web member. Attached with 8d Box or Gun (0.113"x2.5",min.)nails @ 6" oc.

Plating Notes

Plates sized for a minimum of 3.50 sq.in./piece.

Purlins

In lieu of structural panels use purlins to brace all flat TC @ 24" oc.

Wind

Wind loads based on MWFRS with additional C&C member design.

Wind loading based on both gable and hip roof types.

DOUGLAS FLEMING
LICENSE
No. 66648
STATE OF
FLORIDA
PROFESSIONAL ENGINEER

COA #0 278
Florida Certificate of Product Approval #FL1999
09/04/2024

****WARNING**** READ AND FOLLOW ALL NOTES ON THIS DRAWING!
****IMPORTANT**** FURNISH THIS DRAWING TO ALL CONTRACTORS INCLUDING THE INSTALLERS

Trusses require extreme care in fabricating, handling, shipping, installing and bracing. Refer to and follow the latest edition of BCSI (Building Component Safety Information, by TPI and SBCA) for safety practices prior to performing these functions. Installers shall provide temporary bracing per BCSI. Unless noted otherwise, top chord shall have properly attached structural sheathing and bottom chord shall have a properly attached rigid ceiling. Locations shown for permanent lateral restraint of webs shall have continuous lateral restraint (CLR), installed with diagonal bracing installed on the CLR per BCSI sections B3, B7, or B10, as applicable. Apply plates to each face of truss and position as shown above and on the Joint Details, unless noted otherwise. Refer to drawings 160A-Z for standard plate positions. Refer to job's General Notes page for additional information.

Alpine, a division of ITW Building Components Group Inc. shall not be responsible for any deviation from this drawing, any failure to build the truss in conformance with ANSI/TPI 1, or for handling, shipping, installation and bracing of trusses. A seal on this drawing or cover page listing this drawing, indicates acceptance of professional engineering responsibility solely for the design shown. The suitability and use of this drawing for any structure is the responsibility of the Building Designer per ANSI/TPI 1 Sec.2.

For more information see these web sites: Alpine: alpineitw.com; TPI: tpinst.org; SBCA: sbcacomponents.com; ICC: iccsafe.org; AWC: awc.org

ALPINE
AN ITW COMPANY
155 Harlem Ave
North Building, 4th Floor
Glenview, IL 60025

SEQN: 214681 / HIPS FROM: RNB	Ply: 1 Qty: 1	**Job Number:** B59525R Perri Residence **Truss Label:** HT9	Cust: R 857 JRef: 1Y2Y8570005 T46 / DrwNo: 247.24.1013.59082 SSB / DF 09/03/2024

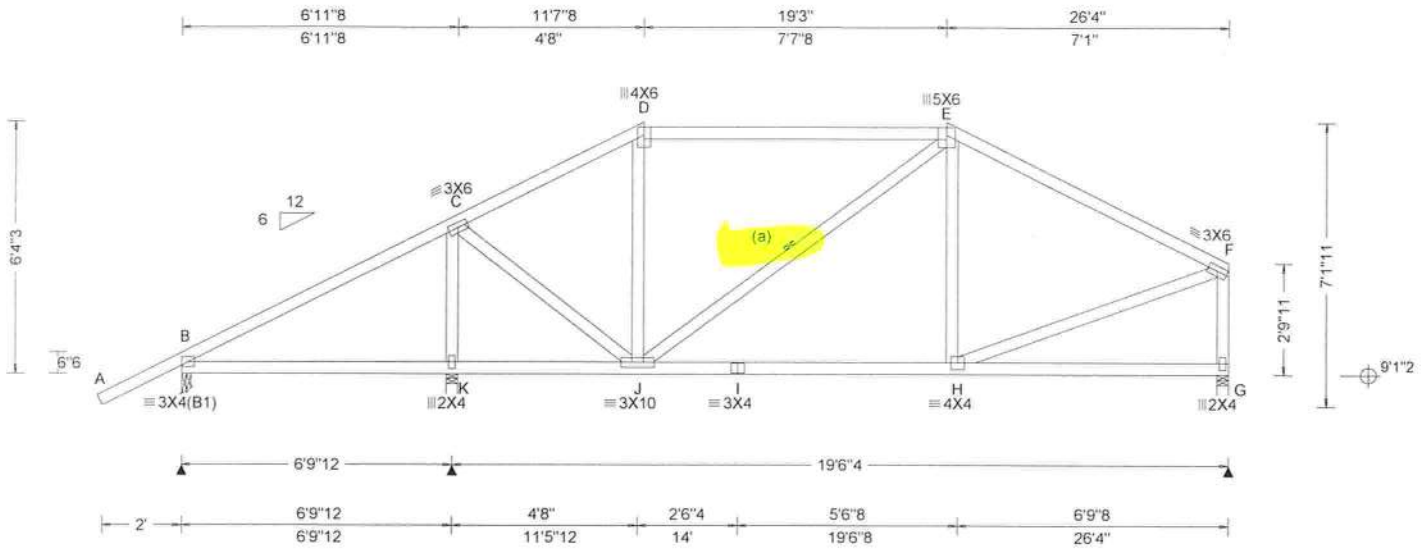

Loading Criteria (psf)

TCLL:	20.00
TCDL:	7.00
BCLL:	0.00
BCDL:	10.00
Des Ld:	37.00
NCBCLL:	10.00
Soffit:	2.00

Load Duration: 1.25
Spacing: 24.0 "

Wind Criteria
Wind Std: ASCE 7-22
Speed: 130 mph
Enclosure: Closed
Risk Category: II
EXP: B Kzt: NA
Mean Height: 15.00 ft
TCDL: 4.2 psf
BCDL: 6.0 psf
MWFRS Parallel Dist: h to 2h
C&C Dist a: 3.00 ft
Loc. from endwall: not in 9.00 ft
GCpi: 0.18
Wind Duration: 1.60

Snow Criteria (Pg,Pf in PSF)
Pg: NA Ct: NA CAT: NA
Pf: NA Ce: NA
Lu: NA Cs: NA
Snow Duration: NA

Building Code:
FBC 8th Ed. 2023 Res.
TPI Std: 2014
Rep Fac: Yes
FT/RT:20(0)/0(0)
Plate Type(s):
WAVE

Defl/CSI Criteria

PP Deflection in	loc	L/defl	L/#
VERT(LL): 0.015	E	999	360
VERT(CL): 0.028	E	999	240
HORZ(LL): 0.005	D	-	-
HORZ(TL): 0.008	D	-	-

Creep Factor: 2.0
Max TC CSI: 0.426
Max BC CSI: 0.405
Max Web CSI: 0.249

VIEW Ver: 23.02.01A.1204.18

▲ Maximum Reactions (lbs)

	Gravity			Non-Gravity		
Loc	R+	/ R-	/ Rh	/ Rw	/ U	/ RL
B	465	/-	/-	/247	/-	/154
K	916	/-	/-	/488	/-	/-
G	753	/-	/-	/392	/-	/-

Wind reactions based on MWFRS
B Brg Wid = 3.0 Min Req = 1.5 (Support)
K Brg Wid = 3.5 Min Req = 1.5 (Truss)
G Brg Wid = 3.5 Min Req = 1.5 (Support)
Bearings B, K, & G Fcperp = 425psi.
Members not listed have forces less than 375#

Maximum Top Chord Forces Per Ply (lbs)

Chords	Tens.	Comp.	Chords	Tens.	Comp.
C - D	192	- 633	E - F	212	- 779
D - E	201	- 518			

Maximum Bot Chord Forces Per Ply (lbs)

Chords	Tens.	Comp.	Chords	Tens.	Comp.
J - I	637	- 168	I - H	637	- 168

Maximum Web Forces Per Ply (lbs)

Webs	Tens.	Comp.	Webs	Tens.	Comp.
K - C	257	- 791	H - F	653	- 141
C - J	537	- 134	F - G	163	- 700

Lumber

Top chord: 2x4 SP #1;
Bot chord: 2x4 SP #1;
Webs: 2x4 SP #3;

Bracing

(a) Continuous lateral restraint equally spaced on member. Or 1x4 #3SRB SPF-S or better "T" reinforcement. 80% length of web member. Attached with 8d Box or Gun (0.113"x2.5",min.)nails @ 6" oc.

Plating Notes

Plates sized for a minimum of 3.50 sq.in./piece.

Purlins

In lieu of structural panels use purlins to brace all flat TC @ 24" oc.

Wind

Wind loads based on MWFRS with additional C&C member design.

Right end vertical not exposed to wind pressure.

Wind loading based on both gable and hip roof types.

DOUGLAS FLEMING
LICENSE
No. 66648
STATE OF
FLORIDA
PROFESSIONAL ENGINEER

COA #0 278
Florida Certificate of Product Approval #FL1999
09/04/2024

****WARNING**** READ AND FOLLOW ALL NOTES ON THIS DRAWING!
****IMPORTANT**** FURNISH THIS DRAWING TO ALL CONTRACTORS INCLUDING THE INSTALLERS

Trusses require extreme care in fabricating, handling, shipping, installing and bracing. Refer to and follow the latest edition of BCSI (Building Component Safety Information, by TPI and SBCA) for safety practices prior to performing these functions. Installers shall provide temporary bracing per BCSI. Unless noted otherwise, top chord shall have properly attached structural sheathing and bottom chord shall have a properly attached rigid ceiling. Locations shown for permanent lateral restraint of webs shall have continuous lateral restraint (CLR), installed with diagonal bracing installed on the CLR per BCSI sections B3, B7, or B10, as applicable. Apply plates to each face of truss and position as shown above and on the Joint Details, unless noted otherwise. Refer to drawings 160A-Z for standard plate positions. Refer to job's General Notes page for additional information.

Alpine, a division of ITW Building Components Group Inc. shall not be responsible for any deviation from this drawing, any failure to build the truss in conformance with ANSI/TPI 1, or for handling, shipping, installation and bracing of trusses. A seal on this drawing or cover page listing this drawing, indicates acceptance of professional engineering responsibility solely for the design shown. The suitability and use of this drawing for any structure is the responsibility of the Building Designer per ANSI/TPI 1 Sec.2.

For more information see these web sites: Alpine: alpineitw.com; TPI: tpinst.org; SBCA: sbcacomponents.com; ICC: iccsafe.org; AWC: awc.org

ALPINE
AN ITW COMPANY
155 Harlem Ave
North Building, 4th Floor
Glenview, IL 60025

SEQN: 214706 / HIPS FROM: RNB	Ply: 1 Qty: 1	**Job Number:** B59525R Perri Residence **Truss Label:** HT10	Cust: R 857 JRef: 1Y2Y8570005 T17 / DrwNo: 247.24.1014.00067 SSB / DF 09/03/2024

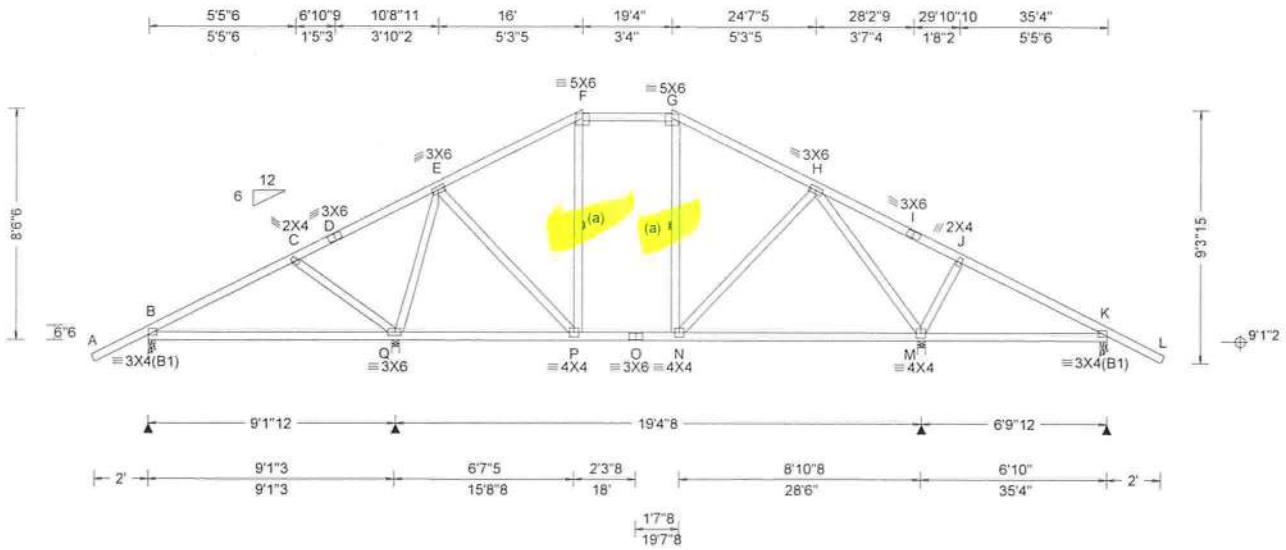

Loading Criteria (psf)	**Wind Criteria**	**Snow Criteria** (Pg,Pf in PSF)	**Defl/CSI Criteria**
TCLL: 20.00	Wind Std: ASCE 7-22	Pg: NA Ct: NA CAT: NA	PP Deflection in loc L/defl L/#
TCDL: 7.00	Speed: 130 mph	Pf: NA Ce: NA	VERT(LL): 0.031 G 999 360
BCLL: 0.00	Enclosure: Closed	Lu: NA Cs: NA	VERT(CL): 0.062 G 999 240
BCDL: 10.00	Risk Category: II	Snow Duration: NA	HORZ(LL): -0.012 G - -
Des Ld: 37.00	EXP: B Kzt: NA		HORZ(TL): 0.025 G - -
NCBCLL: 10.00	Mean Height: 15.00 ft	Building Code:	Creep Factor: 2.0
Soffit: 2.00	TCDL: 4.2 psf	FBC 8th Ed. 2023 Res.	Max TC CSI: 0.262
Load Duration: 1.25	BCDL: 6.0 psf	TPI Std: 2014	Max BC CSI: 0.468
Spacing: 24.0 "	MWFRS Parallel Dist: > 2h	Rep Fac: Yes	Max Web CSI: 0.878
	C&C Dist a: 3.53 ft	FT/RT:20(0)/0(0)	
	Loc. from endwall: not in 9.00 ft	Plate Type(s):	
	GCpi: 0.18	WAVE	VIEW Ver: 23.02.01A.1204.18
	Wind Duration: 1.60		

▲ Maximum Reactions (lbs)

Loc	Gravity R+	Gravity / R-	Non-Gravity / Rh	Non-Gravity / Rw	Non-Gravity / U	Non-Gravity / RL
B	613	/-	/-	/281	/-	/179
Q	992	/-	/-	/581	/51	/-
M	1227	/-	/-	/709	/-	/-
K	369	/-	/-	/152	/13	/-

Wind reactions based on MWFRS
B Brg Wid = 3.0 Min Req = 1.5 (Support)
Q Brg Wid = 3.5 Min Req = 1.5 (Truss)
M Brg Wid = 3.5 Min Req = 1.5 (Support)
K Brg Wid = 3.0 Min Req = 1.5 (Support)
Bearings B, Q, M, & K Fcperp = 425psi.
Members not listed have forces less than 375#

Maximum Top Chord Forces Per Ply (lbs)

Chords	Tens.	Comp.	Chords	Tens.	Comp.
B - C	84	-603	G - H	131	-574
E - F	144	-565	H - I	405	-45
F - G	152	-450			

Maximum Bot Chord Forces Per Ply (lbs)

Chords	Tens.	Comp.	Chords	Tens.	Comp.
B - Q	479	0	O - N	450	0
P - O	450	0			

Maximum Web Forces Per Ply (lbs)

Webs	Tens.	Comp.	Webs	Tens.	Comp.
Q - E	218	-657	H - M	171	-964

Lumber

Top chord: 2x4 SP #1;
Bot chord: 2x4 SP #1;
Webs: 2x4 SP #3;

Bracing

(a) Continuous lateral restraint equally spaced on member. Or 1x4 #3SRB SPF-S or better "T" reinforcement. 80% length of web member. Attached with 8d Box or Gun (0.113"x2.5",min.)nails @ 6" oc.

Plating Notes

Plates sized for a minimum of 3.50 sq.in./piece.

Purlins

In lieu of structural panels use purlins to brace all flat TC @ 24" oc.

Wind

Wind loads based on MWFRS with additional C&C member design.

Wind loading based on both gable and hip roof types.

DOUGLAS FLEMING
LICENSE
No. 66648
STATE OF
FLORIDA
PROFESSIONAL ENGINEER

COA #0 248
Florida Certificate of Product Approval #FL1999
09/04/2024

WARNING READ AND FOLLOW ALL NOTES ON THIS DRAWING!
IMPORTANT FURNISH THIS DRAWING TO ALL CONTRACTORS INCLUDING THE INSTALLERS

Trusses require extreme care in fabricating, handling, shipping, installing and bracing. Refer to and follow the latest edition of BCSI (Building Component Safety Information, by TPI and SBCA) for safety practices prior to performing these functions. Installers shall provide temporary bracing per BCSI. Unless noted otherwise, top chord shall have properly attached structural sheathing and bottom chord shall have a properly attached rigid ceiling. Locations shown for permanent lateral restraint of webs shall have continuous lateral restraint (CLR), installed with diagonal bracing installed on the CLR per BCSI sections B3, B7, or B10, as applicable. Apply plates to each face of truss and position as shown above and on the Joint Details, unless noted otherwise. Refer to drawings 160A-Z for standard plate positions. Refer to job's General Notes page for additional information.

Alpine, a division of ITW Building Components Group Inc. shall not be responsible for any deviation from this drawing, any failure to build the truss in conformance with ANSI/TPI 1, or for handling, shipping, installation and bracing of trusses. A seal on this drawing or cover page listing this drawing, indicates acceptance of professional engineering responsibility solely for the design shown. The suitability and use of this drawing for any structure is the responsibility of the Building Designer per ANSI/TPI 1 Sec.2.

For more information see these web sites: Alpine: alpineitw.com; TPI: tpinst.org; SBCA: sbcacomponents.com; ICC: iccsafe.org; AWC: awc.org

ALPINE
AN ITW COMPANY
155 Harlem Ave
North Building, 4th Floor
Glenview, IL 60025

SEQN: 214684 / HIPS FROM: RNB	Ply: 1 Qty: 1	**Job Number:** B59525R Perri Residence **Truss Label:** HT11	Cust: R 857 JRef: 1Y2Y8570005 T44 / DrwNo: 247.24.1013.59801 SSB / DF 09/03/2024

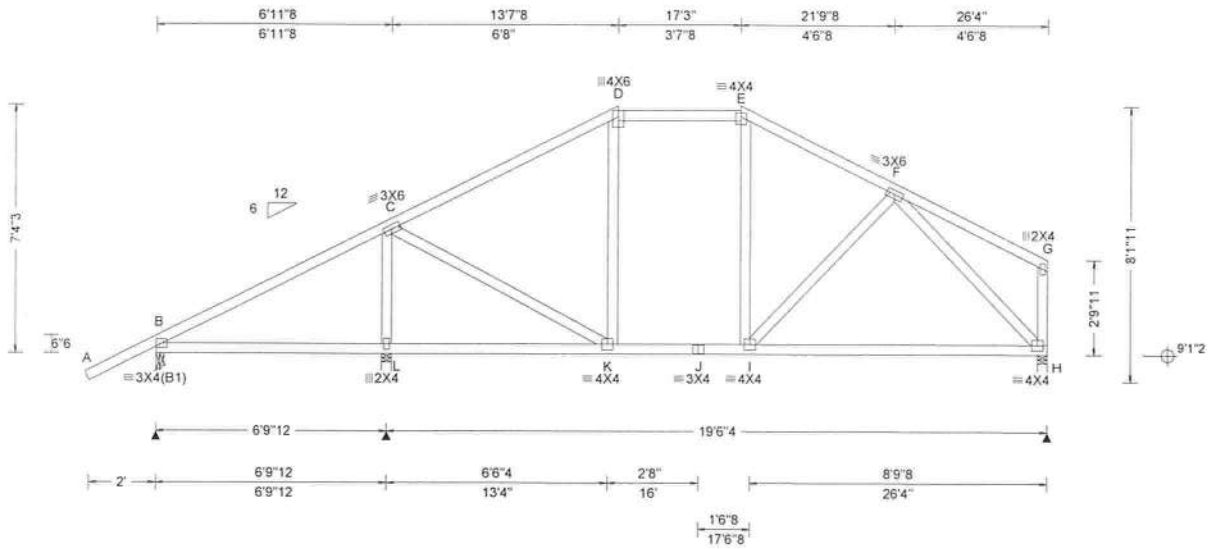

Loading Criteria (psf)	**Wind Criteria**	**Snow Criteria** (Pg,Pf in PSF)	**Defl/CSI Criteria**
TCLL: 20.00	Wind Std: ASCE 7-22	Pg: NA Ct: NA CAT: NA	PP Deflection in loc L/defl L/#
TCDL: 7.00	Speed: 130 mph	Pf: NA Ce: NA	VERT(LL): 0.044 E 999 360
BCLL: 0.00	Enclosure: Closed	Lu: NA Cs: NA	VERT(CL): 0.095 E 999 240
BCDL: 10.00	Risk Category: II	Snow Duration: NA	HORZ(LL): -0.017 E - -
Des Ld: 37.00	EXP: B Kzt: NA		HORZ(TL): 0.037 E - -
NCBCLL: 10.00	Mean Height: 15.00 ft	Building Code:	Creep Factor: 2.0
Soffit: 2.00	TCDL: 4.2 psf	FBC 8th Ed. 2023 Res.	Max TC CSI: 0.353
Load Duration: 1.25	BCDL: 6.0 psf	TPI Std: 2014	Max BC CSI: 0.520
Spacing: 24.0 "	MWFRS Parallel Dist: h to 2h	Rep Fac: Yes	Max Web CSI: 0.672
	C&C Dist a: 3.00 ft	FT/RT:20(0)/0(0)	
	Loc. from endwall: not in 9.00 ft	Plate Type(s):	
	GCpi: 0.18	WAVE	VIEW Ver: 23.02.01A.1204.18
	Wind Duration: 1.60		

▲ Maximum Reactions (lbs)

Loc	Gravity R+	/ R-	/ Rh	Non-Gravity / Rw	/ U	/ RL
B	701	/-	/-	/317	/-	/171
L	881	/-	/-	/503	/83	/-
H	792	/-	/-	/449	/-	/-

Wind reactions based on MWFRS
B Brg Wid = 3.0 Min Req = 1.5 (Support)
L Brg Wid = 3.5 Min Req = 1.5 (Truss)
H Brg Wid = 3.5 Min Req = 1.5 (Support)
Bearings B, L, & H Fcperp = 425psi.
Members not listed have forces less than 375#

Maximum Top Chord Forces Per Ply (lbs)

Chords	Tens.	Comp.	Chords	Tens.	Comp.
B - C	130	-755	D - E	189	-596
C - D	178	-750	E - F	178	-736

Maximum Bot Chord Forces Per Ply (lbs)

Chords	Tens.	Comp.	Chords	Tens.	Comp.
B - L	594	0	J - I	596	-74
L - K	598	0	I - H	588	-110
K - J	596	-74			

Maximum Web Forces Per Ply (lbs)

Webs	Tens.	Comp.	Webs	Tens.	Comp.
L - C	280	-722	F - H	128	-829

Lumber

Top chord: 2x4 SP #1;
Bot chord: 2x4 SP #1;
Webs: 2x4 SP #3;

Plating Notes

Plates sized for a minimum of 3.50 sq.in./piece.

Purlins

In lieu of structural panels use purlins to brace all flat TC @ 24" oc.

Wind

Wind loads based on MWFRS with additional C&C member design.

Right end vertical not exposed to wind pressure.

Wind loading based on both gable and hip roof types.

DOUGLAS FLEMING
LICENSE
No. 66648
STATE OF
FLORIDA
PROFESSIONAL ENGINEER

COA #0 278
Florida Certificate of Product Approval #FL1999
09/04/2024

****WARNING**** READ AND FOLLOW ALL NOTES ON THIS DRAWING!
****IMPORTANT**** FURNISH THIS DRAWING TO ALL CONTRACTORS INCLUDING THE INSTALLERS

Trusses require extreme care in fabricating, handling, shipping, installing and bracing. Refer to and follow the latest edition of BCSI (Building Component Safety Information, by TPI and SBCA) for safety practices prior to performing these functions. Installers shall provide temporary bracing per BCSI. Unless noted otherwise, top chord shall have properly attached structural sheathing and bottom chord shall have a properly attached rigid ceiling. Locations shown for permanent lateral restraint of webs shall have continuous lateral restraint (CLR), installed with diagonal bracing installed on the CLR per BCSI sections B3, B7, or B10, as applicable. Apply plates to each face of truss and position as shown above and on the Joint Details, unless noted otherwise. Refer to drawings 160A-Z for standard plate positions. Refer to job's General Notes page for additional information.

Alpine, a division of ITW Building Components Group Inc. shall not be responsible for any deviation from this drawing, any failure to build the truss in conformance with ANSI/TPI 1, or for handling, shipping, installation and bracing of trusses. A seal on this drawing or cover page listing this drawing, indicates acceptance of professional engineering responsibility solely for the design shown. The suitability and use of this drawing for any structure is the responsibility of the Building Designer per ANSI/TPI 1 Sec.2.

For more information see these web sites: Alpine: alpineitw.com; TPI: tpinst.org; SBCA: sbcacomponents.com; ICC: iccsafe.org; AWC: awc.org

ALPINE
AN ITW COMPANY
155 Harlem Ave
North Building, 4th Floor
Glenview, IL 60025

SEQN: 214717 / HIPS FROM: RNB	Ply: 1 Qty: 1	**Job Number:** B59525R Perri Residence **Truss Label:** HT14	Cust: R 857 JRef: 1Y2Y8570005 T15 / DrwNo: 247.24.1014.00568 SSB / DF 09/03/2024

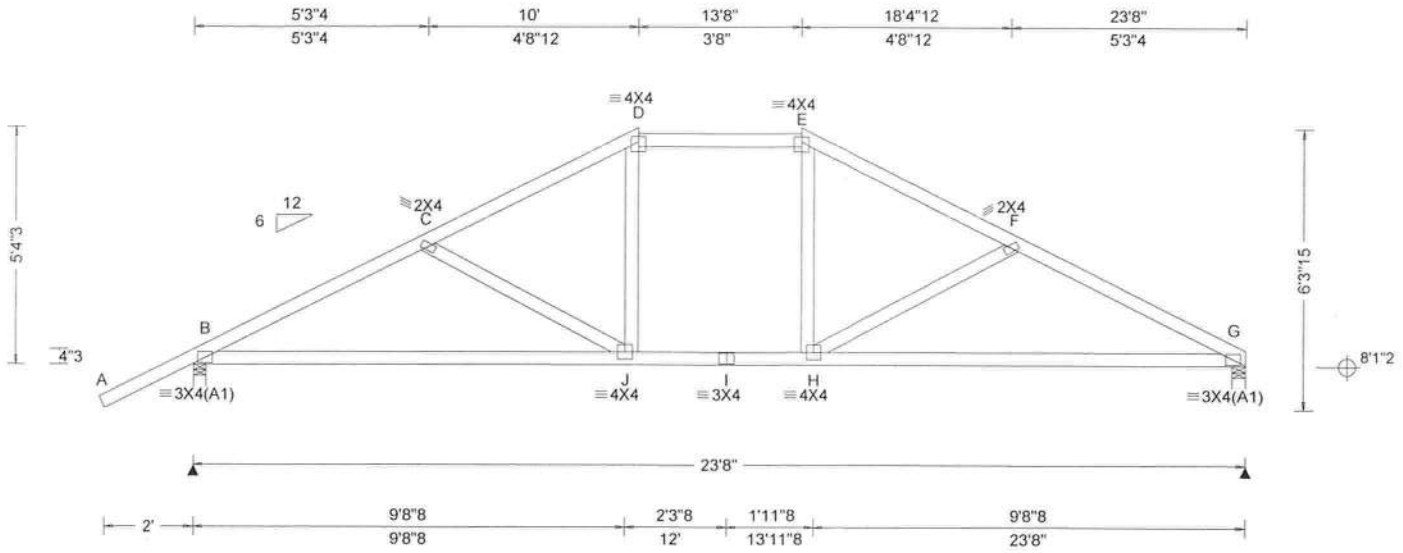

Loading Criteria (psf)

TCLL:	20.00
TCDL:	7.00
BCLL:	0.00
BCDL:	10.00
Des Ld:	37.00
NCBCLL:	10.00
Soffit:	2.00

Load Duration: 1.25
Spacing: 24.0 "

Wind Criteria
Wind Std: ASCE 7-22
Speed: 130 mph
Enclosure: Closed
Risk Category: II
EXP: B Kzt: NA
Mean Height: 15.00 ft
TCDL: 4.2 psf
BCDL: 6.0 psf
MWFRS Parallel Dist: h/2 to h
C&C Dist a: 3.00 ft
Loc. from endwall: not in 9.00 ft
GCpi: 0.18
Wind Duration: 1.60

Snow Criteria (Pg,Pf in PSF)
Pg: NA Ct: NA CAT: NA
Pf: NA Ce: NA
Lu: NA Cs: NA
Snow Duration: NA

Building Code:
FBC 8th Ed. 2023 Res.
TPI Std: 2014
Rep Fac: Yes
FT/RT:20(0)/0(0)
Plate Type(s):
WAVE

Defl/CSI Criteria

PP Deflection in	loc	L/defl	L/#
VERT(LL): 0.052	H	999	360
VERT(CL): 0.097	H	999	240
HORZ(LL): 0.022	G	-	-
HORZ(TL): 0.040	G	-	-

Creep Factor: 2.0
Max TC CSI: 0.244
Max BC CSI: 0.553
Max Web CSI: 0.177

VIEW Ver: 23.02.01A.1204.18

▲ Maximum Reactions (lbs)

	Gravity			Non-Gravity		
Loc	R+	/ R-	/ Rh	/ Rw	/ U	/ RL
B	1026	/-	/-	/546	/53	/109
G	889	/-	/-	/463	/28	/-

Wind reactions based on MWFRS
B Brg Wid = 3.5 Min Req = 1.5 (Support)
G Brg Wid = 3.5 Min Req = 1.5 (Support)
Bearings B & G Fcperp = 425psi.
Members not listed have forces less than 375#

Maximum Top Chord Forces Per Ply (lbs)

Chords	Tens.	Comp.	Chords	Tens.	Comp.
B - C	257	- 1491	E - F	232	- 1229
C - D	223	- 1222	F - G	264	- 1521
D - E	233	- 1029			

Maximum Bot Chord Forces Per Ply (lbs)

Chords	Tens.	Comp.	Chords	Tens.	Comp.
B - J	1282	- 194	I - H	1029	- 108
J - I	1029	- 108	H - G	1319	- 190

Lumber
Top chord: 2x4 SP #1;
Bot chord: 2x4 SP #1;
Webs: 2x4 SP #3;

Plating Notes
Plates sized for a minimum of 3.50 sq.in./piece.

Purlins
In lieu of structural panels use purlins to brace all flat TC @ 24" oc.

Wind
Wind loads based on MWFRS with additional C&C member design.
Wind loading based on both gable and hip roof types.

DOUGLAS FLEMING
LICENSE
No. 66648
STATE OF
FLORIDA
PROFESSIONAL ENGINEER

COA #0 278
Florida Certificate of Product Approval #FL1999
09/04/2024

****WARNING**** READ AND FOLLOW ALL NOTES ON THIS DRAWING!
****IMPORTANT**** FURNISH THIS DRAWING TO ALL CONTRACTORS INCLUDING THE INSTALLERS

Trusses require extreme care in fabricating, handling, shipping, installing and bracing. Refer to and follow the latest edition of BCSI (Building Component Safety Information, by TPI and SBCA) for safety practices prior to performing these functions. Installers shall provide temporary bracing per BCSI. Unless noted otherwise, top chord shall have properly attached structural sheathing and bottom chord shall have a properly attached rigid ceiling. Locations shown for permanent lateral restraint of webs shall have continuous lateral restraint (CLR), installed with diagonal bracing installed on the CLR per BCSI sections B3, B7, or B10, as applicable. Apply plates to each face of truss and position as shown above and on the Joint Details, unless noted otherwise. Refer to drawings 160A-Z for standard plate positions. Refer to job's General Notes page for additional information.

Alpine, a division of ITW Building Components Group Inc. shall not be responsible for any deviation from this drawing, any failure to build the truss in conformance with ANSI/TPI 1, or for handling, shipping, installation and bracing of trusses. A seal on this drawing or cover page listing this drawing, indicates acceptance of professional engineering responsibility solely for the design shown. The suitability and use of this drawing for any structure is the responsibility of the Building Designer per ANSI/TPI 1 Sec.2.

For more information see these web sites: Alpine: alpineitw.com; TPI: tpinst.org; SBCA: sbcacomponents.com; ICC: iccsafe.org; AWC: awc.org

ALPINE
AN ITW COMPANY
155 Harlem Ave
North Building, 4th Floor
Glenview, IL 60025

SEQN: 214737 / HIPS FROM: RNB	Ply: 1 Qty: 1	**Job Number:** B59525R Perri Residence **Truss Label:** HT15	Cust: R 857 JRef: 1Y2Y8570005 T2 / DrwNo: 247.24.1013.59098 SSB / DF 09/03/2024

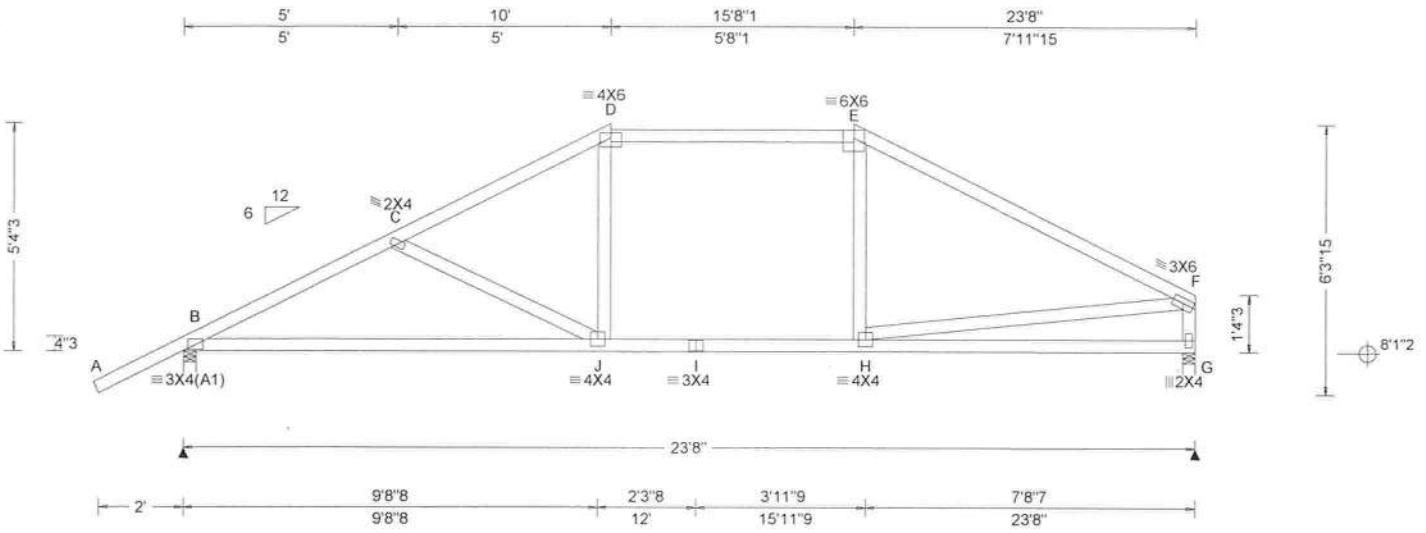

Loading Criteria (psf)

TCLL:	20.00
TCDL:	7.00
BCLL:	0.00
BCDL:	10.00
Des Ld:	37.00
NCBCLL:	10.00
Soffit:	2.00

Load Duration: 1.25
Spacing: 24.0 "

Wind Criteria
Wind Std: ASCE 7-22
Speed: 130 mph
Enclosure: Closed
Risk Category: II
EXP: B Kzt: NA
Mean Height: 15.00 ft
TCDL: 4.2 psf
BCDL: 6.0 psf
MWFRS Parallel Dist: h/2 to h
C&C Dist a: 3.00 ft
Loc. from endwall: not in 9.00 ft
GCpi: 0.18
Wind Duration: 1.60

Snow Criteria (Pg,Pf in PSF)
Pg: NA Ct: NA CAT: NA
Pf: NA Ce: NA
Lu: NA Cs: NA
Snow Duration: NA

Building Code:
FBC 8th Ed. 2023 Res.
TPI Std: 2014
Rep Fac: Yes
FT/RT:20(0)/0(0)
Plate Type(s):
WAVE

Defl/CSI Criteria

PP Deflection in	loc	L/defl	L/#
VERT(LL): 0.184	D	999	360
VERT(CL): 0.414	D	681	240
HORZ(LL): 0.084	D	-	-
HORZ(TL): 0.189	D	-	-

Creep Factor: 2.0
Max TC CSI: 0.733
Max BC CSI: 0.624
Max Web CSI: 0.362

VIEW Ver: 23.02.01A.1204.18

▲ Maximum Reactions (lbs)

Loc	Gravity R+	/ R-	/ Rh	Non-Gravity / Rw	/ U	/ RL
B	1031	/-	/-	/554	/54	/119
G	883	/-	/-	/448	/29	/-

Wind reactions based on MWFRS
B Brg Wid = 3.5 Min Req = 1.5 (Support)
G Brg Wid = 3.5 Min Req = 1.5 (Support)
Bearings B & G Fcperp = 425psi.
Members not listed have forces less than 375#

Maximum Top Chord Forces Per Ply (lbs)

Chords	Tens.	Comp.	Chords	Tens.	Comp.
B - C	299	- 1514	D - E	279	- 1021
C - D	272	- 1223	E - F	258	- 1225

Maximum Bot Chord Forces Per Ply (lbs)

Chords	Tens.	Comp.	Chords	Tens.	Comp.
B - J	1309	- 283	I - H	1021	- 203
J - I	1021	- 203			

Maximum Web Forces Per Ply (lbs)

Webs	Tens.	Comp.	Webs	Tens.	Comp.
H - F	950	- 178	F - G	181	- 822

Lumber
Top chord: 2x4 SP #1;
Bot chord: 2x4 SP #1;
Webs: 2x4 SP #3;

Plating Notes
Plates sized for a minimum of 3.50 sq.in./piece.

Purlins
In lieu of structural panels use purlins to brace all flat TC @ 24" oc.

Wind
Wind loads based on MWFRS with additional C&C member design.
Right end vertical not exposed to wind pressure.
Wind loading based on both gable and hip roof types.

DOUGLAS FLEMING
LICENSE
No. 66648
STATE OF
FLORIDA
PROFESSIONAL ENGINEER

COA #0 278
Florida Certificate of Product Approval #FL1999
09/04/2024

WARNING READ AND FOLLOW ALL NOTES ON THIS DRAWING!
IMPORTANT FURNISH THIS DRAWING TO ALL CONTRACTORS INCLUDING THE INSTALLERS

Trusses require extreme care in fabricating, handling, shipping, installing and bracing. Refer to and follow the latest edition of BCSI (Building Component Safety Information, by TPI and SBCA) for safety practices prior to performing these functions. Installers shall provide temporary bracing per BCSI. Unless noted otherwise, top chord shall have properly attached structural sheathing and bottom chord shall have a properly attached rigid ceiling. Locations shown for permanent lateral restraint of webs shall have continuous lateral restraint (CLR), installed with diagonal bracing installed on the CLR per BCSI sections B3, B7, or B10, as applicable. Apply plates to each face of truss and position as shown above and on the Joint Details, unless noted otherwise. Refer to drawings 160A-Z for standard plate positions. Refer to job's General Notes page for additional information.

Alpine, a division of ITW Building Components Group Inc. shall not be responsible for any deviation from this drawing, any failure to build the truss in conformance with ANSI/TPI 1, or for handling, shipping, installation and bracing of trusses. A seal on this drawing or cover page listing this drawing, indicates acceptance of professional engineering responsibility solely for the design shown. The suitability and use of this drawing for any structure is the responsibility of the Building Designer per ANSI/TPI 1 Sec.2.

For more information see these web sites: Alpine: alpineitw.com; TPI: tpinst.org; SBCA: sbcacomponents.com; ICC: iccsafe.org; AWC: awc.org

ALPINE AN ITW COMPANY
155 Harlem Ave
North Building, 4th Floor
Glenview, IL 60025

SEQN: 214740 / HIPS FROM: RNB	Ply: 1 Qty: 1	**Job Number:** B59525R Perri Residence **Truss Label:** HT17	Cust: R 857 JRef: 1Y2Y8570005 T3 / DrwNo: 247.24.1013.59941 SSB / DF 09/03/2024

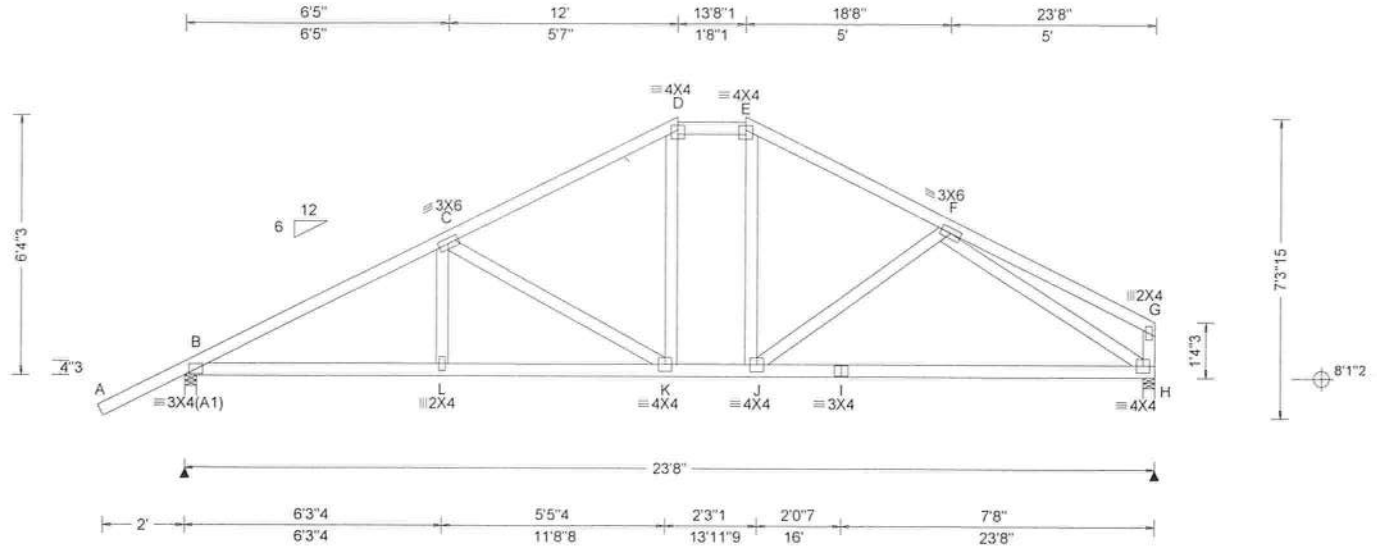

Loading Criteria (psf)

TCLL:	20.00
TCDL:	7.00
BCLL:	0.00
BCDL:	10.00
Des Ld:	37.00
NCBCLL:	10.00
Soffit:	2.00

Load Duration: 1.25
Spacing: 24.0 "

Wind Criteria
Wind Std: ASCE 7-22
Speed: 130 mph
Enclosure: Closed
Risk Category: II
EXP: B Kzt: NA
Mean Height: 15.00 ft
TCDL: 4.2 psf
BCDL: 6.0 psf
MWFRS Parallel Dist: h/2 to h
C&C Dist a: 3.00 ft
Loc. from endwall: not in 9.00 ft
GCpi: 0.18
Wind Duration: 1.60

Snow Criteria (Pg,Pf in PSF)
Pg: NA Ct: NA CAT: NA
Pf: NA Ce: NA
Lu: NA Cs: NA
Snow Duration: NA

Building Code:
FBC 8th Ed. 2023 Res.
TPI Std: 2014
Rep Fac: Yes
FT/RT:20(0)/0(0)
Plate Type(s):
WAVE

Defl/CSI Criteria

PP Deflection in	loc	L/defl	L/#
VERT(LL): 0.046	L	999	360
VERT(CL): 0.097	K	999	240
HORZ(LL): 0.021	G	-	-
HORZ(TL): 0.039	G	-	-

Creep Factor: 2.0
Max TC CSI: 0.289
Max BC CSI: 0.653
Max Web CSI: 0.813

VIEW Ver: 23.02.01A.1204.18

▲ Maximum Reactions (lbs)

	Gravity			Non-Gravity		
Loc	R+	/ R-	/ Rh	/ Rw	/ U	/ RL
B	1031	/-	/-	/555	/52	/137
H	883	/-	/-	/449	/27	/-

Wind reactions based on MWFRS
B Brg Wid = 3.5 Min Req = 1.5 (Support)
H Brg Wid = 3.5 Min Req = 1.5 (Support)
Bearings B & H Fcperp = 425psi.
Members not listed have forces less than 375#

Maximum Top Chord Forces Per Ply (lbs)

Chords	Tens.	Comp.	Chords	Tens.	Comp.
B - C	155	- 1520	D - E	179	- 881
C - D	177	- 1069	E - F	170	- 1062

Maximum Bot Chord Forces Per Ply (lbs)

Chords	Tens.	Comp.	Chords	Tens.	Comp.
B - L	1294	- 151	J - I	982	- 142
L - K	1291	- 152	I - H	982	- 142
K - J	881	- 78			

Maximum Web Forces Per Ply (lbs)

Webs	Tens.	Comp.	Webs	Tens.	Comp.
C - K	86	- 503	F - H	180	- 1136

Lumber

Top chord: 2x4 SP #1;
Bot chord: 2x4 SP #1;
Webs: 2x4 SP #3;

Plating Notes

Plates sized for a minimum of 3.50 sq.in./piece.

Purlins

In lieu of structural panels use purlins to brace all flat TC @ 24" oc.

Wind

Wind loads based on MWFRS with additional C&C member design.

Right end vertical not exposed to wind pressure.

Wind loading based on both gable and hip roof types.

DOUGLAS FLEMING
LICENSE
No. 66648
STATE OF
FLORIDA
PROFESSIONAL ENGINEER

COA #0 278
Florida Certificate of Product Approval #FL1999
09/04/2024

****WARNING**** READ AND FOLLOW ALL NOTES ON THIS DRAWING!
****IMPORTANT**** FURNISH THIS DRAWING TO ALL CONTRACTORS INCLUDING THE INSTALLERS

Trusses require extreme care in fabricating, handling, shipping, installing and bracing. Refer to and follow the latest edition of BCSI (Building Component Safety Information, by TPI and SBCA) for safety practices prior to performing these functions. Installers shall provide temporary bracing per BCSI. Unless noted otherwise, top chord shall have properly attached structural sheathing and bottom chord shall have a properly attached rigid ceiling. Locations shown for permanent lateral restraint of webs shall have continuous lateral restraint (CLR), installed with diagonal bracing installed on the CLR per BCSI sections B3, B7, or B10, as applicable. Apply plates to each face of truss and position as shown above and on the Joint Details, unless noted otherwise. Refer to drawings 160A-Z for standard plate positions. Refer to job's General Notes page for additional information.

Alpine, a division of ITW Building Components Group Inc. shall not be responsible for any deviation from this drawing, any failure to build the truss in conformance with ANSI/TPI 1, or for handling, shipping, installation and bracing of trusses. A seal on this drawing or cover page listing this drawing, indicates acceptance of professional engineering responsibility solely for the design shown. The suitability and use of this drawing for any structure is the responsibility of the Building Designer per ANSI/TPI 1 Sec.2.

For more information see these web sites: Alpine: alpineitw.com; TPI: tpinst.org; SBCA: sbcacomponents.com; ICC: iccsafe.org; AWC: awc.org

ALPINE
AN ITW COMPANY
155 Harlem Ave
North Building, 4th Floor
Glenview, IL 60025

SEQN: 214778 / FLAT FROM: RNB	Ply: 1 Qty: 1	**Job Number:** B59525R Perri Residence **Truss Label:** HT18	Cust: R 857 JRef:1Y2Y8570005 T55 / DrwNo: 247.24.1013.59567 SSB / DF 09/03/2024

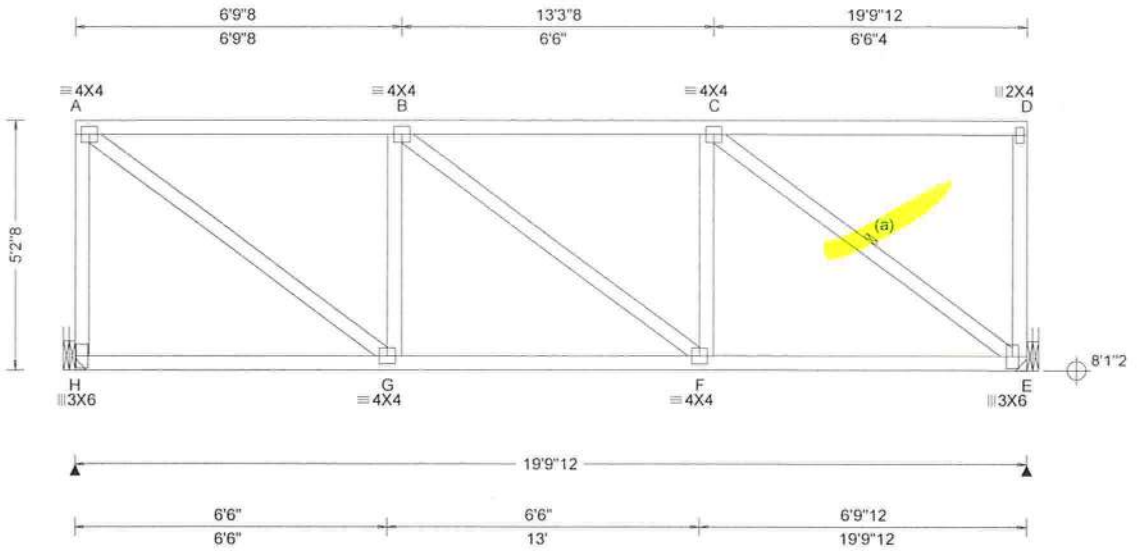

Loading Criteria (psf)

TCLL: 20.00
TCDL: 7.00
BCLL: 0.00
BCDL: 10.00
Des Ld: 37.00
NCBCLL: 10.00
Soffit: 2.00
Load Duration: 1.25
Spacing: 24.0 "

Wind Criteria

Wind Std: ASCE 7-22
Speed: 130 mph
Enclosure: Closed
Risk Category: II
EXP: B Kzt: NA
Mean Height: 15.00 ft
TCDL: 4.2 psf
BCDL: 6.0 psf
MWFRS Parallel Dist: h/2 to h
C&C Dist a: 3.00 ft
Loc. from endwall: not in 10.50 ft
GCpi: 0.18
Wind Duration: 1.60

Snow Criteria (Pg,Pf in PSF)

Pg: NA Ct: NA CAT: NA
Pf: NA Ce: NA
Lu: NA Cs: NA
Snow Duration: NA

Building Code:
FBC 8th Ed. 2023 Res.
TPI Std: 2014
Rep Fac: Yes
FT/RT:20(0)/0(0)
Plate Type(s):
WAVE

Defl/CSI Criteria

PP Deflection in	loc	L/defl	L/#
VERT(LL): 0.025	B	999	360
VERT(CL): 0.046	B	999	240
HORZ(LL): 0.007	E	-	-
HORZ(TL): 0.014	E	-	-

Creep Factor: 2.0
Max TC CSI: 0.438
Max BC CSI: 0.399
Max Web CSI: 0.707

VIEW Ver: 23.02.01A.1204.18

▲ Maximum Reactions (lbs)

Loc	Gravity R+	/ R-	/ Rh	Non-Gravity / Rw	/ U	/ RL
H	733	/-	/-	/350	/42	/107
E	733	/-	/-	/357	/47	/-

Wind reactions based on MWFRS
H Brg Wid = - Min Req = -
E Brg Wid = - Min Req = -
Members not listed have forces less than 375#

Maximum Top Chord Forces Per Ply (lbs)

Chords	Tens.	Comp.	Chords	Tens.	Comp.
A - B	229	-703	B - C	239	-719

Maximum Bot Chord Forces Per Ply (lbs)

Chords	Tens.	Comp.	Chords	Tens.	Comp.
G - F	726	-241	F - E	710	-244

Maximum Web Forces Per Ply (lbs)

Webs	Tens.	Comp.	Webs	Tens.	Comp.
A - H	280	-680	G - B	256	-391
A - G	881	-283	C - E	305	-889

Lumber

Top chord: 2x4 SP #1;
Bot chord: 2x4 SP #1;
Webs: 2x4 SP #3;

Bracing

(a) Continuous lateral restraint equally spaced on member. Or 1x4 #3SRB SPF-S or better "T" reinforcement. 80% length of web member. Attached with 8d Box or Gun (0.113"x2.5",min.)nails @ 6" oc.

Plating Notes

Plates sized for a minimum of 3.50 sq.in./piece.

Hangers / Ties

(J) Hanger Support Required, by others

Wind

Wind loads based on MWFRS with additional C&C member design.

End verticals not exposed to wind pressure.

Additional Notes

Truss must be installed as shown with top chord up.

DOUGLAS FLEMING
LICENSE
No. 86648
STATE OF
FLORIDA
PROFESSIONAL ENGINEER

COA #0 278
Florida Certificate of Product Approval #FL1999
09/04/2024

****WARNING**** READ AND FOLLOW ALL NOTES ON THIS DRAWING!
****IMPORTANT**** FURNISH THIS DRAWING TO ALL CONTRACTORS INCLUDING THE INSTALLERS

Trusses require extreme care in fabricating, handling, shipping, installing and bracing. Refer to and follow the latest edition of BCSI (Building Component Safety Information, by TPI and SBCA) for safety practices prior to performing these functions. Installers shall provide temporary bracing per BCSI. Unless noted otherwise, top chord shall have properly attached structural sheathing and bottom chord shall have a properly attached rigid ceiling. Locations shown for permanent lateral restraint of webs shall have continuous lateral restraint (CLR), installed with diagonal bracing installed on the CLR per BCSI sections B3, B7, or B10, as applicable. Apply plates to each face of truss and position as shown above and on the Joint Details, unless noted otherwise. Refer to drawings 160A-Z for standard plate positions. Refer to job's General Notes page for additional information.

Alpine, a division of ITW Building Components Group Inc. shall not be responsible for any deviation from this drawing, any failure to build the truss in conformance with ANSI/TPI 1, or for handling, shipping, installation and bracing of trusses. A seal on this drawing or cover page listing this drawing, indicates acceptance of professional engineering responsibility solely for the design shown. The suitability and use of this drawing for any structure is the responsibility of the Building Designer per ANSI/TPI 1 Sec.2.

For more information see these web sites: Alpine: alpineitw.com; TPI: tpinst.org; SBCA: sbcacomponents.com; ICC: iccsafe.org; AWC: awc.org

ALPINE
AN ITW COMPANY
155 Harlem Ave
North Building, 4th Floor
Glenview, IL 60025

SEQN: 214780 / HIPM FROM: RNB	Ply: 1 Qty: 1	**Job Number:** B59525R Perri Residence **Truss Label:** HT20	Cust: R 857 JRef: 1Y2Y8570005 T56 / DrwNo: 247.24.1013.59319 SSB / DF 09/03/2024

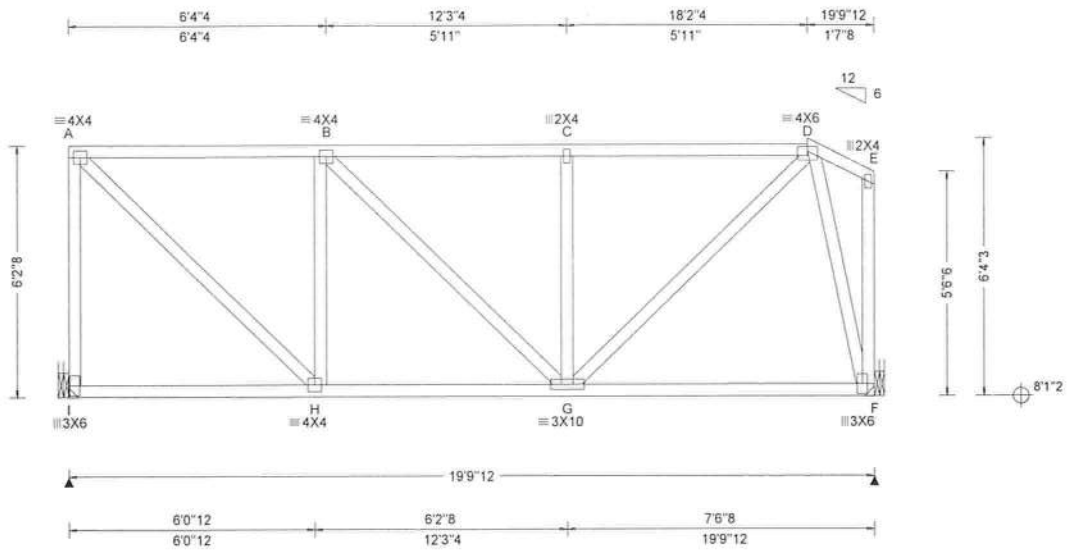

Loading Criteria (psf)

TCLL:	20.00
TCDL:	7.00
BCLL:	0.00
BCDL:	10.00
Des Ld:	37.00
NCBCLL:	10.00
Soffit:	2.00

Load Duration: 1.25
Spacing: 24.0 "

Wind Criteria
Wind Std: ASCE 7-22
Speed: 130 mph
Enclosure: Closed
Risk Category: II
EXP: B Kzt: NA
Mean Height: 15.00 ft
TCDL: 4.2 psf
BCDL: 6.0 psf
MWFRS Parallel Dist: h/2 to h
C&C Dist a: 3.00 ft
Loc. from endwall: not in 9.00 ft
GCpi: 0.18
Wind Duration: 1.60

Snow Criteria (Pg,Pf in PSF)
Pg: NA Ct: NA CAT: NA
Pf: NA Ce: NA
Lu: NA Cs: NA
Snow Duration: NA

Building Code:
FBC 8th Ed. 2023 Res.
TPI Std: 2014
Rep Fac: Yes
FT/RT:20(0)/0(0)
Plate Type(s):
WAVE

Defl/CSI Criteria

PP Deflection in	loc	L/defl	L/#
VERT(LL): 0.022	C	999	360
VERT(CL): 0.041	C	999	240
HORZ(LL): 0.005	A	-	-
HORZ(TL): 0.009	A	-	-

Creep Factor: 2.0
Max TC CSI: 0.351
Max BC CSI: 0.396
Max Web CSI: 0.604

VIEW Ver: 23.02.01A.1204.18

▲ Maximum Reactions (lbs)

	Gravity			Non-Gravity		
Loc	R+	/ R-	/ Rh	/ Rw	/ U	/ RL
I	749	/-	/-	/353	/49	/136
F	749	/-	/-	/354	/43	/-

Wind reactions based on MWFRS
I Brg Wid = - Min Req = -
F Brg Wid = - Min Req = -
Members not listed have forces less than 375#

Maximum Top Chord Forces Per Ply (lbs)

Chords	Tens.	Comp.	Chords	Tens.	Comp.
A - B	297	-570	C - D	311	-637
B - C	310	-635			

Maximum Bot Chord Forces Per Ply (lbs)

Chords	Tens.	Comp.
H - G	592	-291

Maximum Web Forces Per Ply (lbs)

Webs	Tens.	Comp.	Webs	Tens.	Comp.
A - I	379	-699	G - D	632	-266
A - H	797	-370	D - F	390	-727
H - B	336	-430			

Lumber
Top chord: 2x4 SP #1;
Bot chord: 2x4 SP #1;
Webs: 2x4 SP #3;

Plating Notes
Plates sized for a minimum of 3.50 sq.in./piece.

Hangers / Ties
(J) Hanger Support Required, by others

Purlins
In lieu of structural panels use purlins to brace all flat TC @ 24" oc.

Wind
Wind loads based on MWFRS with additional C&C member design.
End verticals not exposed to wind pressure.
Wind loading based on both gable and hip roof types.

DOUGLAS FLEMING
LICENSE
No. 66648
STATE OF
FLORIDA
PROFESSIONAL ENGINEER

COA #0 278
Florida Certificate of Product Approval #FL1999
09/04/2024

****WARNING**** READ AND FOLLOW ALL NOTES ON THIS DRAWING!
****IMPORTANT**** FURNISH THIS DRAWING TO ALL CONTRACTORS INCLUDING THE INSTALLERS

Trusses require extreme care in fabricating, handling, shipping, installing and bracing. Refer to and follow the latest edition of BCSI (Building Component Safety Information, by TPI and SBCA) for safety practices prior to performing these functions. Installers shall provide temporary bracing per BCSI. Unless noted otherwise, top chord shall have properly attached structural sheathing and bottom chord shall have a properly attached rigid ceiling. Locations shown for permanent lateral restraint of webs shall have continuous lateral restraint (CLR), installed with diagonal bracing installed on the CLR per BCSI sections B3, B7, or B10, as applicable. Apply plates to each face of truss and position as shown above and on the Joint Details, unless noted otherwise. Refer to drawings 160A-Z for standard plate positions. Refer to job's General Notes page for additional information.

Alpine, a division of ITW Building Components Group Inc. shall not be responsible for any deviation from this drawing, any failure to build the truss in conformance with ANSI/TPI 1, or for handling, shipping, installation and bracing of trusses. A seal on this drawing or cover page listing this drawing, indicates acceptance of professional engineering responsibility solely for the design shown. The suitability and use of this drawing for any structure is the responsibility of the Building Designer per ANSI/TPI 1 Sec.2.

For more information see these web sites: Alpine: alpineitw.com; TPI: tpinst.org; SBCA: sbcacomponents.com; ICC: iccsafe.org; AWC: awc.org

ALPINE
AN ITW COMPANY
155 Harlem Ave
North Building, 4th Floor
Glenview, IL 60025

SEQN: 214784 / HIPS FROM: RNB	Ply: 1 Qty: 1	**Job Number:** B59525R Perri Residence **Truss Label:** HT22	Cust: R 857 JRef: 1Y2Y8570005 T58 / DrwNo: 247.24.1014.00144 SSB / DF 09/03/2024

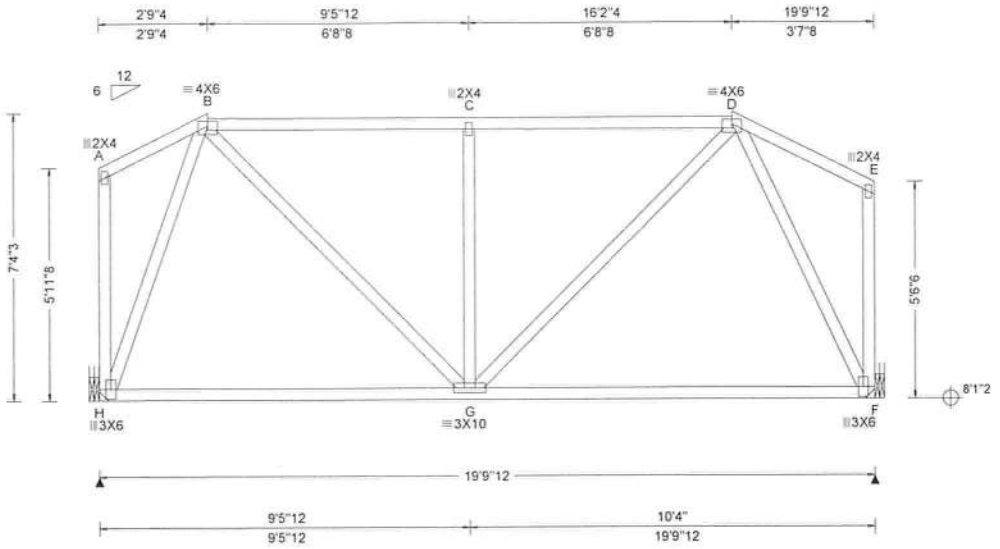

Loading Criteria (psf)

TCLL:	20.00
TCDL:	7.00
BCLL:	0.00
BCDL:	10.00
Des Ld:	37.00
NCBCLL:	10.00
Soffit:	2.00

Load Duration: 1.25
Spacing: 24.0 "

Wind Criteria
Wind Std: ASCE 7-22
Speed: 130 mph
Enclosure: Closed
Risk Category: II
EXP: B Kzt: NA
Mean Height: 15.00 ft
TCDL: 4.2 psf
BCDL: 6.0 psf
MWFRS Parallel Dist: h to 2h
C&C Dist a: 3.00 ft
Loc. from endwall: not in 9.00 ft
GCpi: 0.18
Wind Duration: 1.60

Snow Criteria (Pg,Pf in PSF)
Pg: NA Ct: NA CAT: NA
Pf: NA Ce: NA
Lu: NA Cs: NA
Snow Duration: NA

Building Code:
FBC 8th Ed. 2023 Res.
TPI Std: 2014
Rep Fac: Yes
FT/RT:20(0)/0(0)
Plate Type(s):
WAVE

Defl/CSI Criteria

PP Deflection in	loc	L/defl	L/#
VERT(LL): 0.020	C	999	360
VERT(CL): 0.038	C	999	240
HORZ(LL): 0.005	B	-	-
HORZ(TL): 0.010	B	-	-

Creep Factor: 2.0
Max TC CSI: 0.439
Max BC CSI: 0.915
Max Web CSI: 0.743

VIEW Ver: 23.02.01A.1204.18

▲ Maximum Reactions (lbs)

Loc	Gravity R+	/ R-	/ Rh	Non-Gravity / Rw	/ U	/ RL
H	749	/-	/-	/357	/10	/153
F	749	/-	/-	/360	/-	/-

Wind reactions based on MWFRS
H Brg Wid = - Min Req = -
F Brg Wid = - Min Req = -
Members not listed have forces less than 375#

Maximum Top Chord Forces Per Ply (lbs)

Chords	Tens.	Comp.	Chords	Tens.	Comp.
B - C	315	-616	C - D	315	-616

Maximum Web Forces Per Ply (lbs)

Webs	Tens.	Comp.	Webs	Tens.	Comp.
H - B	340	-649	G - D	460	-180
B - G	540	-210	D - F	304	-641
C - G	383	-474			

Lumber
Top chord: 2x4 SP #1;
Bot chord: 2x4 SP #1;
Webs: 2x4 SP #3;

Plating Notes
Plates sized for a minimum of 3.50 sq.in./piece.

Hangers / Ties
(J) Hanger Support Required, by others

Purlins
In lieu of structural panels use purlins to brace all flat TC @ 24" oc.

Wind
Wind loads based on MWFRS with additional C&C member design.
End verticals not exposed to wind pressure.
Wind loading based on both gable and hip roof types.

DOUGLAS FLEMING
LICENSE
No. 66648
STATE OF
FLORIDA
PROFESSIONAL ENGINEER

COA #0278
Florida Certificate of Product Approval #FL1999
09/04/2024

****WARNING**** READ AND FOLLOW ALL NOTES ON THIS DRAWING!
****IMPORTANT**** FURNISH THIS DRAWING TO ALL CONTRACTORS INCLUDING THE INSTALLERS

Trusses require extreme care in fabricating, handling, shipping, installing and bracing. Refer to and follow the latest edition of BCSI (Building Component Safety Information, by TPI and SBCA) for safety practices prior to performing these functions. Installers shall provide temporary bracing per BCSI. Unless noted otherwise, top chord shall have properly attached structural sheathing and bottom chord shall have a properly attached rigid ceiling. Locations shown for permanent lateral restraint of webs shall have continuous lateral restraint (CLR), installed with diagonal bracing installed on the CLR per BCSI sections B3, B7, or B10, as applicable. Apply plates to each face of truss and position as shown above and on the Joint Details, unless noted otherwise. Refer to drawings 160A-Z for standard plate positions. Refer to job's General Notes page for additional information.

Alpine, a division of ITW Building Components Group Inc. shall not be responsible for any deviation from this drawing, any failure to build the truss in conformance with ANSI/TPI 1, or for handling, shipping, installation and bracing of trusses. A seal on this drawing or cover page listing this drawing, indicates acceptance of professional engineering responsibility solely for the design shown. The suitability and use of this drawing for any structure is the responsibility of the Building Designer per ANSI/TPI 1 Sec.2.

For more information see these web sites: Alpine: alpineitw.com; TPI: tpinst.org; SBCA: sbcacomponents.com; ICC: iccsafe.org; AWC: awc.org

ALPINE
AN ITW COMPANY
155 Harlem Ave
North Building, 4th Floor
Glenview, IL 60025

SEQN: 214786 / HIPS FROM: RNB	Ply: 1 Qty: 1	**Job Number:** B59525R Perri Residence **Truss Label:** HT24	Cust: R 857 JRef: 1Y2Y8570005 T59 / DrwNo: 247.24.1013.59926 SSB / DF 09/03/2024

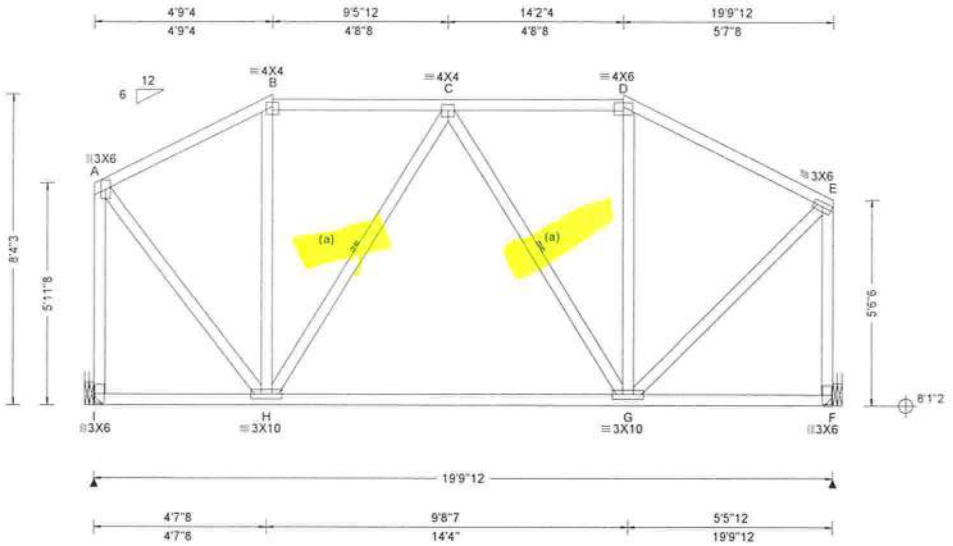

Loading Criteria (psf)

TCLL:	20.00
TCDL:	7.00
BCLL:	0.00
BCDL:	10.00
Des Ld:	37.00
NCBCLL:	10.00
Soffit:	2.00

Load Duration: 1.25
Spacing: 24.0 "

Wind Criteria
Wind Std: ASCE 7-22
Speed: 130 mph
Enclosure: Closed
Risk Category: II
EXP: B Kzt: NA
Mean Height: 15.03 ft
TCDL: 4.2 psf
BCDL: 6.0 psf
MWFRS Parallel Dist: h to 2h
C&C Dist a: 3.00 ft
Loc. from endwall: not in 9.00 ft
GCpi: 0.18
Wind Duration: 1.60

Snow Criteria (Pg,Pf in PSF)
Pg: NA Ct: NA CAT: NA
Pf: NA Ce: NA
Lu: NA Cs: NA
Snow Duration: NA

Building Code:
FBC 8th Ed. 2023 Res.
TPI Std: 2014
Rep Fac: Yes
FT/RT:20(0)/0(0)
Plate Type(s):
WAVE

Defl/CSI Criteria

PP Deflection in	loc	L/defl	L/#
VERT(LL): 0.013	C	999	360
VERT(CL): 0.025	C	999	240
HORZ(LL): 0.003	F	-	-
HORZ(TL): 0.006	F	-	-

Creep Factor: 2.0
Max TC CSI: 0.298
Max BC CSI: 0.478
Max Web CSI: 0.528

VIEW Ver: 23.02.01A.1204.18

▲ Maximum Reactions (lbs)

	Gravity			Non-Gravity		
Loc	R+	/ R-	/ Rh	/ Rw	/ U	/ RL
I	749	/-	/-	/361	/-	/170
F	749	/-	/-	/366	/-	/-

Wind reactions based on MWFRS
I Brg Wid = - Min Req = -
F Brg Wid = - Min Req = -
Members not listed have forces less than 375#

Maximum Top Chord Forces Per Ply (lbs)

Chords	Tens.	Comp.	Chords	Tens.	Comp.
A - B	216	-452	D - E	190	-511
C - D	206	-411			

Maximum Bot Chord Forces Per Ply (lbs)

Chords	Tens.	Comp.
H - G	466	-215

Maximum Web Forces Per Ply (lbs)

Webs	Tens.	Comp.	Webs	Tens.	Comp.
A - I	239	-731	G - E	563	-176
A - H	573	-208	E - F	237	-719

Lumber

Top chord: 2x4 SP #1;
Bot chord: 2x4 SP #1;
Webs: 2x4 SP #3;

Bracing

(a) Continuous lateral restraint equally spaced on member. Or 1x4 #3SRB SPF-S or better "T" reinforcement. 80% length of web member. Attached with 8d Box or Gun (0.113"x2.5",min.)nails @ 6" oc.

Plating Notes

Plates sized for a minimum of 3.50 sq.in./piece.

Hangers / Ties

(J) Hanger Support Required, by others

Purlins

In lieu of structural panels use purlins to brace all flat TC @ 24" oc.

Wind

Wind loads based on MWFRS with additional C&C member design.

End verticals not exposed to wind pressure.

Wind loading based on both gable and hip roof types.

DOUGLAS FLEMING
LICENSE
No. 66648
STATE OF
FLORIDA
PROFESSIONAL ENGINEER

COA #0 278
Florida Certificate of Product Approval #FL1999
09/04/2024

WARNING READ AND FOLLOW ALL NOTES ON THIS DRAWING!
IMPORTANT FURNISH THIS DRAWING TO ALL CONTRACTORS INCLUDING THE INSTALLERS

Trusses require extreme care in fabricating, handling, shipping, installing and bracing. Refer to and follow the latest edition of BCSI (Building Component Safety Information, by TPI and SBCA) for safety practices prior to performing these functions. Installers shall provide temporary bracing per BCSI. Unless noted otherwise, top chord shall have properly attached structural sheathing and bottom chord shall have a properly attached rigid ceiling. Locations shown for permanent lateral restraint of webs shall have continuous lateral restraint (CLR), installed with diagonal bracing installed on the CLR per BCSI sections B3, B7, or B10, as applicable. Apply plates to each face of truss and position as shown above and on the Joint Details, unless noted otherwise. Refer to drawings 160A-Z for standard plate positions. Refer to job's General Notes page for additional information.

Alpine, a division of ITW Building Components Group Inc. shall not be responsible for any deviation from this drawing, any failure to build the truss in conformance with ANSI/TPI 1, or for handling, shipping, installation and bracing of trusses. A seal on this drawing or cover page listing this drawing, indicates acceptance of professional engineering responsibility solely for the design shown. The suitability and use of this drawing for any structure is the responsibility of the Building Designer per ANSI/TPI 1 Sec.2.

For more information see these web sites: Alpine: alpineitw.com; TPI: tpinst.org; SBCA: sbcacomponents.com; ICC: iccsafe.org; AWC: awc.org

ALPINE
AN ITW COMPANY
155 Harlem Ave
North Building, 4th Floor
Glenview, IL 60025

SEQN: 214788 / HIPS FROM: RNB	Ply: 1 Qty: 1	**Job Number:** B59525R Perri Residence **Truss Label:** HT26	Cust: R 857 JRef:1Y2Y8570005 T60 / DrwNo: 247.24.1013.59113 SSB / DF 09/03/2024

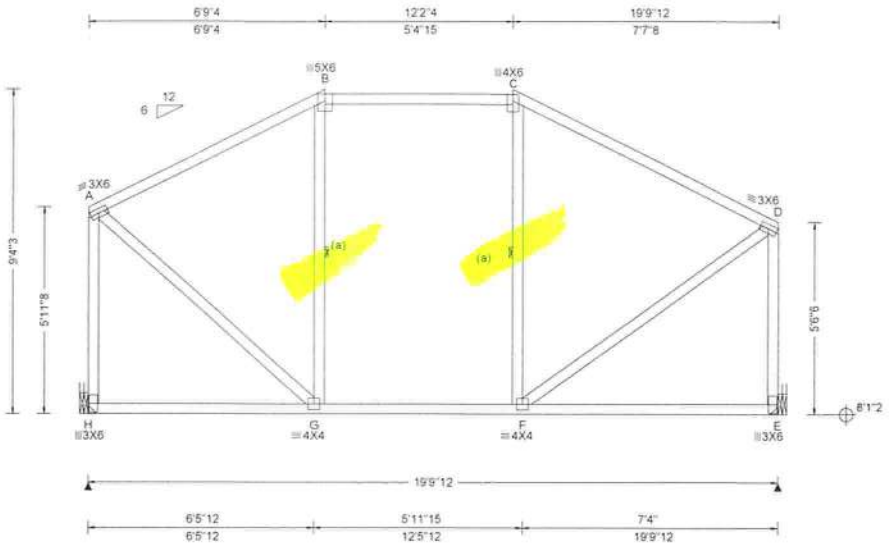

Loading Criteria (psf)	**Wind Criteria**	**Snow Criteria** (Pg,Pf in PSF)	**Defl/CSI Criteria**
TCLL: 20.00	Wind Std: ASCE 7-22	Pg: NA Ct: NA CAT: NA	PP Deflection in loc L/defl L/#
TCDL: 7.00	Speed: 130 mph	Pf: NA Ce: NA	VERT(LL): 0.131 C 999 360
BCLL: 0.00	Enclosure: Closed	Lu: NA Cs: NA	VERT(CL): 0.307 C 773 240
BCDL: 10.00	Risk Category: II	Snow Duration: NA	HORZ(LL): -0.143 C - -
Des Ld: 37.00	EXP: B Kzt: NA		HORZ(TL): 0.337 C - -
NCBCLL: 10.00	Mean Height: 15.53 ft	Building Code:	Creep Factor: 2.0
Soffit: 2.00	TCDL: 4.2 psf	FBC 8th Ed. 2023 Res.	Max TC CSI: 0.718
Load Duration: 1.25	BCDL: 6.0 psf	TPI Std: 2014	Max BC CSI: 0.526
Spacing: 24.0 "	MWFRS Parallel Dist: h to 2h	Rep Fac: Yes	Max Web CSI: 0.519
	C&C Dist a: 3.00 ft	FT/RT:20(0)/0(0)	
	Loc. from endwall: not in 9.00 ft	Plate Type(s):	
	GCpi: 0.18	WAVE	VIEW Ver: 23.02.01A.1204.18
	Wind Duration: 1.60		

▲ Maximum Reactions (lbs)

	Gravity			Non-Gravity		
Loc	R+	/ R-	/ Rh	/ Rw	/ U	/ RL
H	749	/-	/-	/364	/-	/188
E	749	/-	/-	/367	/-	/-

Wind reactions based on MWFRS
H Brg Wid = - Min Req = -
E Brg Wid = - Min Req = -
Members not listed have forces less than 375#

Maximum Top Chord Forces Per Ply (lbs)

Chords	Tens.	Comp.	Chords	Tens.	Comp.
A - B	196	- 521	C - D	195	- 538
B - C	226	- 414			

Maximum Bot Chord Forces Per Ply (lbs)

Chords	Tens.	Comp.
G - F	414	- 123

Maximum Web Forces Per Ply (lbs)

Webs	Tens.	Comp.	Webs	Tens.	Comp.
A - H	217	- 707	F - D	501	- 145
A - G	541	- 185	D - E	212	- 679

Lumber

Top chord: 2x4 SP #1;
Bot chord: 2x4 SP #1;
Webs: 2x4 SP #3;

Bracing

(a) Continuous lateral restraint equally spaced on member. Or 1x4 #3SRB SPF-S or better "T" reinforcement. 80% length of web member. Attached with 8d Box or Gun (0.113"x2.5",min.)nails @ 6" oc.

Plating Notes

Plates sized for a minimum of 3.50 sq.in./piece.

Hangers / Ties

(J) Hanger Support Required, by others

Purlins

In lieu of structural panels use purlins to brace all flat TC @ 24" oc.

Wind

Wind loads based on MWFRS with additional C&C member design.

End verticals not exposed to wind pressure.

Wind loading based on both gable and hip roof types.

DOUGLAS FLEMING
LICENSE
No. 86648
STATE OF
FLORIDA
PROFESSIONAL ENGINEER

COA #0 278
Florida Certificate of Product Approval #FL1999
09/04/2024

****WARNING**** READ AND FOLLOW ALL NOTES ON THIS DRAWING!
****IMPORTANT**** FURNISH THIS DRAWING TO ALL CONTRACTORS INCLUDING THE INSTALLERS

Trusses require extreme care in fabricating, handling, shipping, installing and bracing. Refer to and follow the latest edition of BCSI (Building Component Safety Information, by TPI and SBCA) for safety practices prior to performing these functions. Installers shall provide temporary bracing per BCSI. Unless noted otherwise, top chord shall have properly attached structural sheathing and bottom chord shall have a properly attached rigid ceiling. Locations shown for permanent lateral restraint of webs shall have continuous lateral restraint (CLR), installed with diagonal bracing installed on the CLR per BCSI sections B3, B7, or B10, as applicable. Apply plates to each face of truss and position as shown above and on the Joint Details, unless noted otherwise. Refer to drawings 160A-Z for standard plate positions. Refer to job's General Notes page for additional information.

Alpine, a division of ITW Building Components Group Inc. shall not be responsible for any deviation from this drawing, any failure to build the truss in conformance with ANSI/TPI 1, or for handling, shipping, installation and bracing of trusses. A seal on this drawing or cover page listing this drawing, indicates acceptance of professional engineering responsibility solely for the design shown. The suitability and use of this drawing for any structure is the responsibility of the Building Designer per ANSI/TPI 1 Sec.2.

For more information see these web sites: Alpine: alpineitw.com; TPI: tpinst.org; SBCA: sbcacomponents.com; ICC: iccsafe.org; AWC: awc.org

ALPINE
AN ITW COMPANY
155 Harlem Ave
North Building, 4th Floor
Glenview, IL 60025

SEQN: 215231 / COMN FROM: RNB	Ply: 2 Qty: 1	**Job Number:** B59525R Perri Residence **Truss Label:** SGT1	Cust: R 857 JRef: 1Y2Y8570005 T40 / DrwNo: 247.24.1013.58160 SSB / DF 09/03/2024

2 Complete Trusses Required

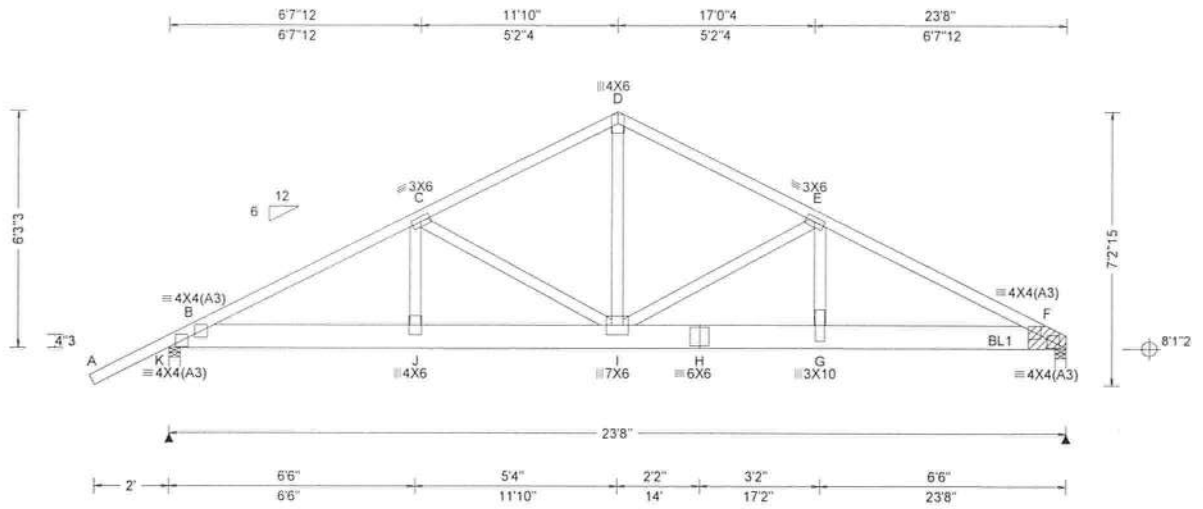

Loading Criteria (psf)
TCLL: 20.00
TCDL: 7.00
BCLL: 0.00
BCDL: 10.00
Des Ld: 37.00
NCBCLL: 0.00
Soffit: 2.00
Load Duration: 1.25
Spacing: 24.0 "

Wind Criteria
Wind Std: ASCE 7-22
Speed: 130 mph
Enclosure: Closed
Risk Category: II
EXP: B Kzt: NA
Mean Height: 15.00 ft
TCDL: 4.2 psf
BCDL: 6.0 psf
MWFRS Parallel Dist: 0 to h/2
C&C Dist a: 3.00 ft
Loc. from endwall: not in 9.00 ft
GCpi: 0.18
Wind Duration: 1.60

Snow Criteria (Pg,Pf in PSF)
Pg: NA Ct: NA CAT: NA
Pf: NA Ce: NA
Lu: NA Cs: NA
Snow Duration: NA

Building Code:
FBC 8th Ed. 2023 Res.
TPI Std: 2014
Rep Fac: No
FT/RT:20(0)/0(0)
Plate Type(s):
WAVE

Defl/CSI Criteria

PP Deflection in	loc	L/defl	L/#
VERT(LL): 0.130	I	999	360
VERT(CL): 0.238	I	999	240
HORZ(LL): 0.031	F	-	-
HORZ(TL): 0.057	F	-	-

Creep Factor: 2.0
Max TC CSI: 0.572
Max BC CSI: 0.535
Max Web CSI: 0.982

VIEW Ver: 23.02.01A.1204.18

▲ Maximum Reactions (lbs)

Loc	Gravity R+	/ R-	/ Rh	Non-Gravity / Rw	/ U	/ RL
K	3838	/-	/-	/-	/203	/-
F	5121	/-	/-	/-	/47	/-

Wind reactions based on MWFRS
K Brg Wid = 3.5 Min Req = 2.7 (Support)
F Brg Wid = 3.5 Min Req = -
Bearings K & F Fcperp = 425psi.
Members not listed have forces less than 375#

Maximum Top Chord Forces Per Ply (lbs)

Chords	Tens.	Comp.	Chords	Tens.	Comp.
B - C	195	- 3989	D - E	126	- 3042
C - D	123	- 3030	E - F	90	- 4437

Maximum Bot Chord Forces Per Ply (lbs)

Chords	Tens.	Comp.	Chords	Tens.	Comp.
B - J	3536	- 166	H - G	3918	- 75
J - I	3515	- 165	G - F	3948	- 73
I - H	3918	- 75			

Maximum Web Forces Per Ply (lbs)

Webs	Tens.	Comp.	Webs	Tens.	Comp.
J - C	800	- 34	I - E	0	- 1434
C - I	71	- 964	E - G	1193	0
D - I	2577	- 77			

Lumber
Top chord: 2x4 SP #1;
Bot chord: 2x8 SP SS Dense;
Webs: 2x4 SP #3;

Nailnote
Nail Schedule:0.128"x3", min. nails
Top Chord: 1 Row @12.00" o.c.
Bot Chord: 1 Row @ 4.75" o.c.
Webs : 1 Row @ 4" o.c.
Use equal spacing between rows and stagger nails in each row to avoid splitting.
(1) 1/2" bolts may be used for
(2) 0.128"x3", min. nails on
The Bottom Chord Only.

Special Loads
------(Lumber Dur.Fac.=1.25 / Plate Dur.Fac.=1.25)

TC: From	56 plf at	-2.13 to	56 plf at	8.06
TC: From	28 plf at	8.06 to	28 plf at	11.83
TC: From	56 plf at	11.83 to	56 plf at	23.67
BC: From	4 plf at	-2.13 to	4 plf at	0.00
BC: From	20 plf at	0.00 to	20 plf at	8.06
BC: From	10 plf at	8.06 to	10 plf at	23.67

BC: 1873 lb Conc. Load at 8.06
BC: 733 lb Conc. Load at 10.06
BC: 749 lb Conc. Load at 12.06,14.06,16.06,18.06
BC: 851 lb Conc. Load at 20.06,22.06

Plating Notes
Plates sized for a minimum of 3.50 sq.in./piece.

Wind
Wind loads and reactions based on MWFRS.
Wind loading based on both gable and hip roof types.

Bearing Block(s)
Brg blocks:0.128"x3", min. nails

brg	x-loc	#blocks	length/blk	#nails/blk	wall plate
2	23.375'	1	12"	4	SPF Standard

Brg block to be same size and species as chord.
Refer to drawing CNNAILSP1014 for more information.

DOUGLAS FLEMING
LICENSE
No. 66648
STATE OF
FLORIDA
PROFESSIONAL ENGINEER

COA #0 278
Florida Certificate of Product Approval #FL1999
09/04/2024

WARNING READ AND FOLLOW ALL NOTES ON THIS DRAWING!
IMPORTANT FURNISH THIS DRAWING TO ALL CONTRACTORS INCLUDING THE INSTALLERS

Trusses require extreme care in fabricating, handling, shipping, installing and bracing. Refer to and follow the latest edition of BCSI (Building Component Safety Information, by TPI and SBCA) for safety practices prior to performing these functions. Installers shall provide temporary bracing per BCSI. Unless noted otherwise, top chord shall have properly attached structural sheathing and bottom chord shall have a properly attached rigid ceiling. Locations shown for permanent lateral restraint of webs shall have continuous lateral restraint (CLR), installed with diagonal bracing installed on the CLR per BCSI sections B3, B7, or B10, as applicable. Apply plates to each face of truss and position as shown above and on the Joint Details, unless noted otherwise. Refer to drawings 160A-Z for standard plate positions. Refer to job's General Notes page for additional information.

Alpine, a division of ITW Building Components Group Inc. shall not be responsible for any deviation from this drawing, any failure to build the truss in conformance with ANSI/TPI 1, or for handling, shipping, installation and bracing of trusses. A seal on this drawing or cover page listing this drawing, indicates acceptance of professional engineering responsibility solely for the design shown. The suitability and use of this drawing for any structure is the responsibility of the Building Designer per ANSI/TPI 1 Sec.2.

For more information see these web sites: Alpine: alpineitw.com; TPI: tpinst.org; SBCA: sbcacomponents.com; ICC: iccsafe.org; AWC: awc.org

ALPINE AN ITW COMPANY
155 Harlem Ave
North Building, 4th Floor
Glenview, IL 60025

SEQN: 215229 / SPEC FROM: RNB	Ply: 2 Qty: 1	**Job Number:** B59525R Perri Residence **Truss Label:** SGT2	Cust: R 857 JRef: 1Y2Y8570005 T62 / DrwNo: 247.24.1013.59505 SSB / DF 09/03/2024

2 Complete Trusses Required

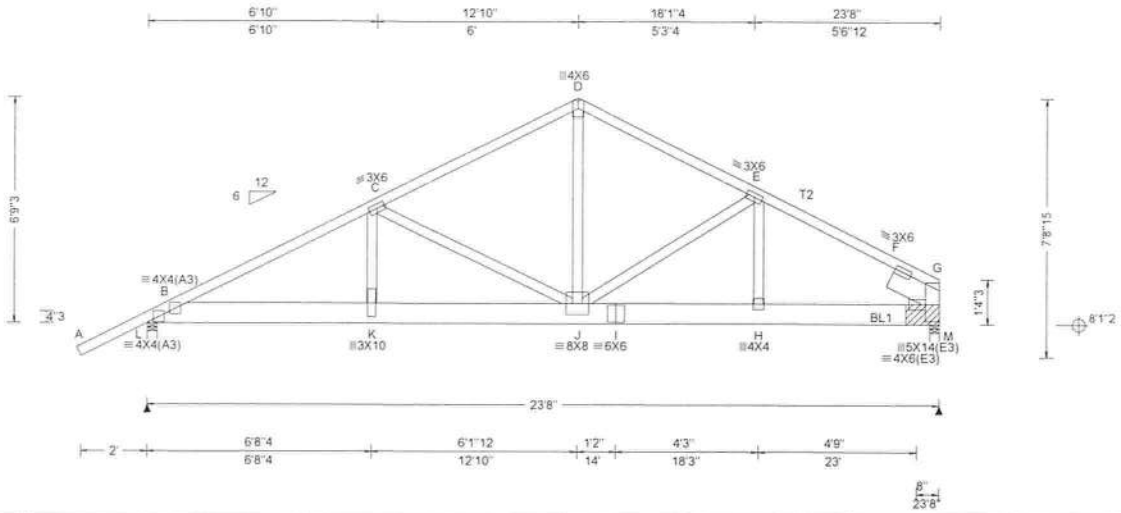

Loading Criteria (psf)
TCLL: 20.00
TCDL: 7.00
BCLL: 0.00
BCDL: 10.00
Des Ld: 37.00
NCBCLL: 0.00
Soffit: 2.00
Load Duration: 1.25
Spacing: 24.0 "

Wind Criteria
Wind Std: ASCE 7-22
Speed: 130 mph
Enclosure: Closed
Risk Category: II
EXP: B Kzt: NA
Mean Height: 15.00 ft
TCDL: 4.2 psf
BCDL: 6.0 psf
MWFRS Parallel Dist: 0 to h/2
C&C Dist a: 3.00 ft
Loc. from endwall: not in 9.00 ft
GCpi: 0.18
Wind Duration: 1.60

Snow Criteria (Pg,Pf in PSF)
Pg: NA Ct: NA CAT: NA
Pf: NA Ce: NA
Lu: NA Cs: NA
Snow Duration: NA

Building Code:
FBC 8th Ed. 2023 Res.
TPI Std: 2014
Rep Fac: No
FT/RT:20(0)/0(0)
Plate Type(s):
WAVE

Defl/CSI Criteria

PP Deflection in	loc	L/defl	L/#
VERT(LL): 0.171	H	999	360
VERT(CL): 0.312	H	903	240
HORZ(LL): 0.115	F	-	-
HORZ(TL): 0.210	F	-	-

Creep Factor: 2.0
Max TC CSI: 0.714
Max BC CSI: 0.456
Max Web CSI: 0.894

VIEW Ver: 23.02.01A.1204.18

▲ Maximum Reactions (lbs)

	Gravity			Non-Gravity	
Loc	R+ / R-	/ Rh	/ Rw	/ U	/ RL
L	3864 / -	/ -	/ -	/195	/ -
M	5181 / -	/ -	/ -	/33	/ -

Wind reactions based on MWFRS
L Brg Wid = 3.5 Min Req = 2.7 (Support)
M Brg Wid = 3.5 Min Req = -
Bearings L & M Fcperp = 425psi.
Members not listed have forces less than 375#

Maximum Top Chord Forces Per Ply (lbs)

Chords	Tens.	Comp.	Chords	Tens.	Comp.
B - C	187	-4040	E - F	55	-3377
C - D	106	-2860	F - G	60	-3443
D - E	108	-2847			

Maximum Bot Chord Forces Per Ply (lbs)

Chords	Tens.	Comp.	Chords	Tens.	Comp.
B - K	3579	-159	I - H	2877	-46
K - J	3555	-158	H - G	2925	-46
J - I	2877	-46			

Maximum Web Forces Per Ply (lbs)

Webs	Tens.	Comp.	Webs	Tens.	Comp.
K - C	951	-37	J - E	0	-406
C - J	80	-1152	E - H	589	0
D - J	2345	-59			

Lumber
Top chord: 2x4 SP #1; T2 2x4 SP SS Dense;
Bot chord: 2x8 SP SS Dense;
Webs: 2x4 SP #3;
Rt Slider: 2x8 SP SS Dense; block length = 1.660'

Nailnote
Nail Schedule:0.128"x3", min. nails
Top Chord: 1 Row @12.00" o.c.
Bot Chord: 1 Row @ 4.75" o.c.
Webs : 1 Row @ 4" o.c.
Use equal spacing between rows and stagger nails in each row to avoid splitting.
(1) 1/2" bolts may be used for
(2) 0.128"x3", min. nails on
The Bottom Chord Only.

Special Loads
------(Lumber Dur.Fac.=1.25 / Plate Dur.Fac.=1.25)
TC: From 56 plf at -2.13 to 56 plf at 8.06
TC: From 28 plf at 8.06 to 28 plf at 12.84
TC: From 56 plf at 12.84 to 56 plf at 23.67
BC: From 4 plf at -2.13 to 4 plf at 0.00
BC: From 20 plf at 0.00 to 20 plf at 8.06
BC: From 10 plf at 8.06 to 10 plf at 23.67
BC: 1864 lb Conc. Load at 8.06
BC: 733 lb Conc. Load at 10.06
BC: 749 lb Conc. Load at 12.06,14.06,16.06,18.06
BC: 912 lb Conc. Load at 20.06,22.06

Plating Notes
Plates sized for a minimum of 3.50 sq.in./piece.

Wind
Wind loads and reactions based on MWFRS.
Wind loading based on both gable and hip roof types.

Bearing Block(s)
Brg blocks:0.128"x3", min. nails

brg	x-loc	#blocks	length/blk	#nails/blk	wall plate
2	23.375'	1	12"	4	SPF Standard

Brg block to be same size and species as chord.
Refer to drawing CNNAILSP1014 for more information.

DOUGLAS FLEMING LICENSE No. 66648 STATE OF FLORIDA PROFESSIONAL ENGINEER

COA #0 278
Florida Certificate of Product Approval #FL1999
09/04/2024

****WARNING**** READ AND FOLLOW ALL NOTES ON THIS DRAWING!
****IMPORTANT**** FURNISH THIS DRAWING TO ALL CONTRACTORS INCLUDING THE INSTALLERS

Trusses require extreme care in fabricating, handling, shipping, installing and bracing. Refer to and follow the latest edition of BCSI (Building Component Safety Information, by TPI and SBCA) for safety practices prior to performing these functions. Installers shall provide temporary bracing per BCSI. Unless noted otherwise, top chord shall have properly attached structural sheathing and bottom chord shall have a properly attached rigid ceiling. Locations shown for permanent lateral restraint of webs shall have continuous lateral restraint (CLR), installed with diagonal bracing installed on the CLR per BCSI sections B3, B7, or B10, as applicable. Apply plates to each face of truss and position as shown above and on the Joint Details, unless noted otherwise. Refer to drawings 160A-Z for standard plate positions. Refer to job's General Notes page for additional information.

Alpine, a division of ITW Building Components Group Inc. shall not be responsible for any deviation from this drawing, any failure to build the truss in conformance with ANSI/TPI 1, or for handling, shipping, installation and bracing of trusses. A seal on this drawing or cover page listing this drawing, indicates acceptance of professional engineering responsibility solely for the design shown. The suitability and use of this drawing for any structure is the responsibility of the Building Designer per ANSI/TPI 1 Sec.2.

For more information see these web sites: Alpine: alpineitw.com; TPI: tpinst.org; SBCA: sbcacomponents.com; ICC: iccsafe.org; AWC: awc.org

ALPINE AN ITW COMPANY
155 Harlem Ave
North Building, 4th Floor
Glenview, IL 60025

SEQN: 214615 / HIPM FROM: RNB	Ply: 2 Qty: 1	**Job Number:** B59525R Perri Residence **Truss Label:** SGT3	Cust: R 857 JRef: 1Y2Y8570005 T32 / DrwNo: 247.24.1013.58911 SSB / DF 09/03/2024

2 Complete Trusses Required

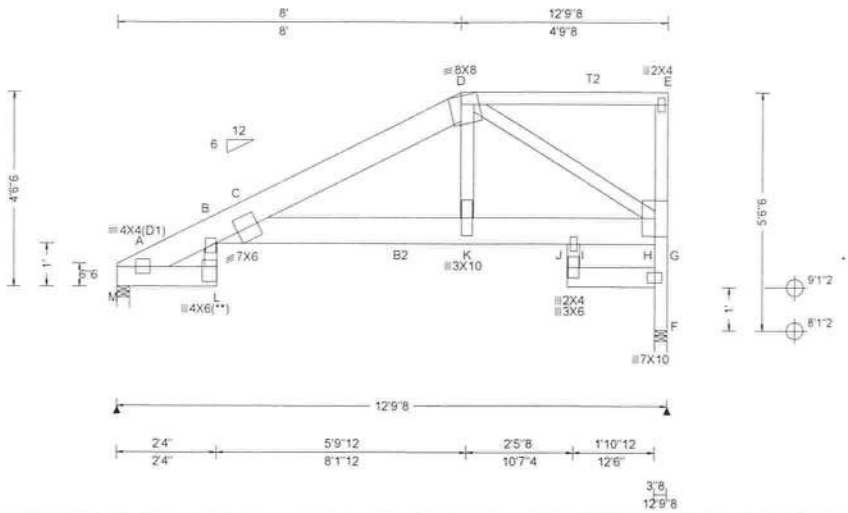

Loading Criteria (psf)	**Wind Criteria**	**Snow Criteria** (Pg,Pf in PSF)	**Defl/CSI Criteria**
TCLL: 20.00 TCDL: 7.00 BCLL: 0.00 BCDL: 10.00 Des Ld: 37.00 NCBCLL: 0.00 Soffit: 2.00 Load Duration: 1.25 Spacing: 24.0 "	Wind Std: ASCE 7-22 Speed: 130 mph Enclosure: Closed Risk Category: II EXP: B Kzt: NA Mean Height: 15.00 ft TCDL: 4.2 psf BCDL: 6.0 psf MWFRS Parallel Dist: 0 to h/2 C&C Dist a: 3.00 ft Loc. from endwall: not in 9.00 ft GCpi: 0.18 Wind Duration: 1.60	Pg: NA Ct: NA CAT: NA Pf: NA Ce: NA Lu: NA Cs: NA Snow Duration: NA Building Code: FBC 8th Ed. 2023 Res. TPI Std: 2014 Rep Fac: No FT/RT:20(0)/0(0) Plate Type(s): WAVE	PP Deflection in loc L/defl L/# VERT(LL): 0.220 C 682 360 VERT(CL): 0.402 C 373 240 HORZ(LL): 0.140 J - - HORZ(TL): 0.256 J - - Creep Factor: 2.0 Max TC CSI: 0.837 Max BC CSI: 0.361 Max Web CSI: 0.827 VIEW Ver: 23.02.01A.1204.18

▲ Maximum Reactions (lbs)

	Gravity			Non-Gravity		
Loc	R+	/ R-	/ Rh	/ Rw	/ U	/ RL
M	2887	/-	/-	/124	/-	/106
F	3799	/-	/-	/159	/-	/-

Wind reactions based on MWFRS
M Brg Wid = 3.5 Min Req = 2.0 (Support)
F Brg Wid = 3.5 Min Req = 1.5 (Support)
Bearing F is a rigid surface.
Bearing M Fcperp = 425psi.
Members not listed have forces less than 375#

Maximum Top Chord Forces Per Ply (lbs)

Chords	Tens.	Comp.	Chords	Tens.	Comp.
A - B	27	- 560	C - D	0	- 1980
B - C	31	- 449			

Maximum Bot Chord Forces Per Ply (lbs)

Chords	Tens.	Comp.	Chords	Tens.	Comp.
C - K	1979	0	I - G	2081	0
K - I	2021	0			

Maximum Web Forces Per Ply (lbs)

Webs	Tens.	Comp.	Webs	Tens.	Comp.
B - L	400	0	G - H	0	- 1593
D - K	1294	0	H - F	0	- 1899
D - G	0	- 2329			

Lumber

Top chord: 2x8 SP SS Dense; T2 2x4 SP #1;
Bot chord: 2x6 SP #1; B2 2x8 SP SS Dense;
Webs: 2x4 SP #3;

Nailnote

Nail Schedule:0.128"x3", min. nails
Top Chord: 1 Row @12.00" o.c.
Bot Chord: 1 Row @ 3.50" o.c.
Webs : 1 Row @ 4" o.c.
Use equal spacing between rows and stagger nails in each row to avoid splitting.
(1) 1/2" bolts may be used for
(2) 0.128"x3", min. nails on
The Bottom Chord Only.

Special Loads

------(Lumber Dur.Fac.=1.25 / Plate Dur.Fac.=1.25)

TC: From	56 plf at	0.00 to	56 plf at	8.00
TC: From	28 plf at	8.00 to	28 plf at	12.79
BC: From	10 plf at	0.00 to	10 plf at	2.33
BC: From	10 plf at	2.34 to	10 plf at	12.50

TC: 219 lb Conc. Load at 8.03
TC: 205 lb Conc. Load at 10.06
TC: 196 lb Conc. Load at 12.06
BC: 739 lb Conc. Load at 1.77,11.77
BC: 742 lb Conc. Load at 3.77, 5.77, 7.77, 9.77
BC: 634 lb Conc. Load at 8.03
BC: 133 lb Conc. Load at 10.06
BC: 149 lb Conc. Load at 12.06

Purlins

In lieu of structural panels use purlins to brace all flat TC @ 24" oc.

Plating Notes

All plates are 3X4 except as noted.

(**) 1 plate(s) require special positioning. Refer to scaled plate plot details for special positioning requirements.

Plates sized for a minimum of 3.50 sq.in./piece.

Wind

Wind loads and reactions based on MWFRS.

Right end vertical not exposed to wind pressure.

Wind loading based on both gable and hip roof types.

Laterally brace top chord below filler and bottom chord above filler at 24" o.c.,including a lateral brace at chord ends (If no rigid diaphragm exists at that point)

Drop leg is not designed to resist any lateral loading from wind pressure on the wall. End vertical does not provide support for wall.

DOUGLAS FLEMING
LICENSE
No. 66648
STATE OF
FLORIDA
PROFESSIONAL ENGINEER

COA #0 278
Florida Certificate of Product Approval #FL1999
09/04/2024

WARNING READ AND FOLLOW ALL NOTES ON THIS DRAWING!
IMPORTANT FURNISH THIS DRAWING TO ALL CONTRACTORS INCLUDING THE INSTALLERS

Trusses require extreme care in fabricating, handling, shipping, installing and bracing. Refer to and follow the latest edition of BCSI (Building Component Safety Information, by TPI and SBCA) for safety practices prior to performing these functions. Installers shall provide temporary bracing per BCSI. Unless noted otherwise, top chord shall have properly attached structural sheathing and bottom chord shall have a properly attached rigid ceiling. Locations shown for permanent lateral restraint of webs shall have continuous lateral restraint (CLR), installed with diagonal bracing installed on the CLR per BCSI sections B3, B7, or B10, as applicable. Apply plates to each face of truss and position as shown above and on the Joint Details, unless noted otherwise. Refer to drawings 160A-Z for standard plate positions. Refer to job's General Notes page for additional information.

Alpine, a division of ITW Building Components Group Inc. shall not be responsible for any deviation from this drawing, any failure to build the truss in conformance with ANSI/TPI 1, or for handling, shipping, installation and bracing of trusses. A seal on this drawing or cover page listing this drawing, indicates acceptance of professional engineering responsibility solely for the design shown. The suitability and use of this drawing for any structure is the responsibility of the Building Designer per ANSI/TPI 1 Sec.2.

For more information see these web sites: Alpine: alpineitw.com; TPI: tpinst.org; SBCA: sbcacomponents.com; ICC: iccsafe.org; AWC: awc.org

ALPINE
AN ITW COMPANY
155 Harlem Ave
North Building, 4th Floor
Glenview, IL 60025

SEQN: 214711 / COMN FROM: RNB	Ply: 1 Qty: 1	**Job Number:** B59525R Perri Residence **Truss Label:** T1	Cust: R 857 JRef:1Y2Y8570005 T19 / DrwNo: 247.24.1013.59629 SSB / DF 09/03/2024

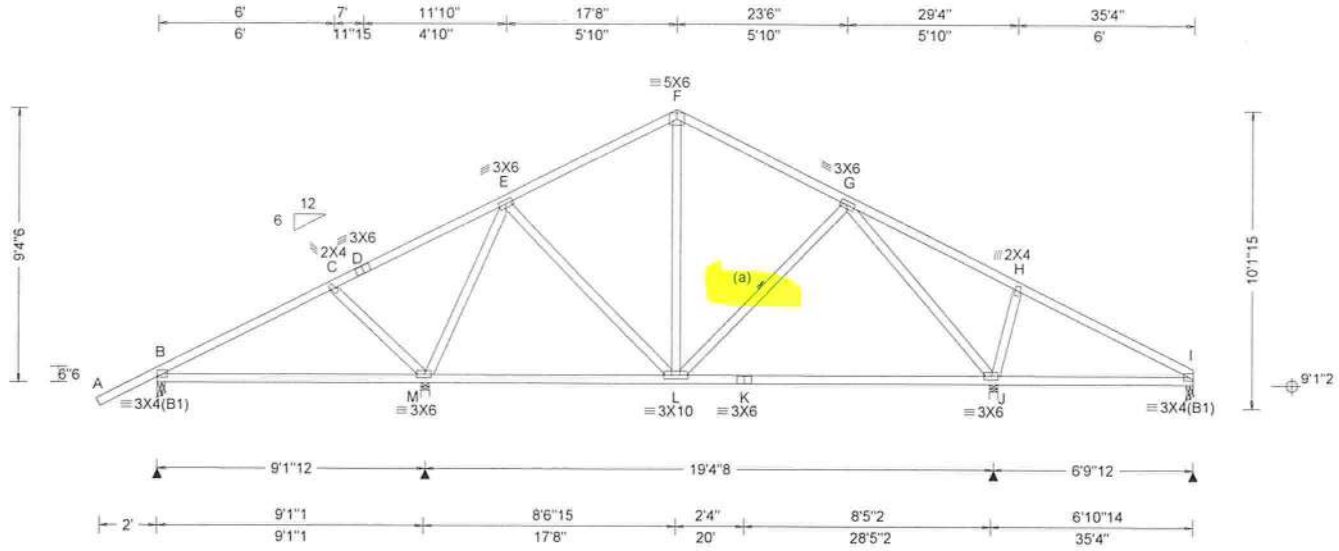

Loading Criteria (psf)	**Wind Criteria**	**Snow Criteria** (Pg,Pf in PSF)	**Defl/CSI Criteria**
TCLL: 20.00	Wind Std: ASCE 7-22	Pg: NA Ct: NA CAT: NA	PP Deflection in loc L/defl L/#
TCDL: 7.00	Speed: 130 mph	Pf: NA Ce: NA	VERT(LL): 0.011 L 999 360
BCLL: 0.00	Enclosure: Closed	Lu: NA Cs: NA	VERT(CL): 0.020 L 999 240
BCDL: 10.00	Risk Category: II	Snow Duration: NA	HORZ(LL): 0.006 I - -
Des Ld: 37.00	EXP: B Kzt: NA		HORZ(TL): 0.012 I - -
NCBCLL: 10.00	Mean Height: 15.00 ft	Building Code:	Creep Factor: 2.0
Soffit: 2.00	TCDL: 4.2 psf	FBC 8th Ed. 2023 Res.	Max TC CSI: 0.260
Load Duration: 1.25	BCDL: 6.0 psf	TPI Std: 2014	Max BC CSI: 0.584
Spacing: 24.0 "	MWFRS Parallel Dist: > 2h	Rep Fac: Yes	Max Web CSI: 0.791
	C&C Dist a: 3.53 ft	FT/RT:20(0)/0(0)	
	Loc. from endwall: not in 9.00 ft	Plate Type(s):	
	GCpi: 0.18	WAVE	VIEW Ver: 23.02.01A.1204.18
	Wind Duration: 1.60		

▲ Maximum Reactions (lbs)

Loc	Gravity R+	/ R-	/ Rh	Non-Gravity / Rw	/ U	/ RL
B	475	/-	/-	/269	/-	/181
M	1087	/-	/-	/578	/-	/-
J	964	/-	/-	/543	/-	/-
I	299	/-	/-	/163	/-	/-

Wind reactions based on MWFRS
B Brg Wid = 3.0 Min Req = 1.5 (Support)
M Brg Wid = 3.5 Min Req = 1.5 (Truss)
J Brg Wid = 3.5 Min Req = 1.5 (Truss)
I Brg Wid = 3.0 Min Req = 1.5 (Support)
Bearings B, M, J, & I Fcperp = 425psi.
Members not listed have forces less than 375#

Maximum Top Chord Forces Per Ply (lbs)

Chords	Tens.	Comp.	Chords	Tens.	Comp.
E - F	115	-561	F - G	119	-562

Maximum Bot Chord Forces Per Ply (lbs)

Chords	Tens.	Comp.	Chords	Tens.	Comp.
L - K	468	0	K - J	468	0

Maximum Web Forces Per Ply (lbs)

Webs	Tens.	Comp.	Webs	Tens.	Comp.
M - E	178	-746	G - J	29	-649

Lumber

Top chord: 2x4 SP #1;
Bot chord: 2x4 SP #1;
Webs: 2x4 SP #3;

Bracing

(a) Continuous lateral restraint equally spaced on member. Or 1x4 #3SRB SPF-S or better "T" reinforcement. 80% length of web member. Attached with 8d Box or Gun (0.113"x2.5",min.)nails @ 6" oc.

Plating Notes

Plates sized for a minimum of 3.50 sq.in./piece.

Wind

Wind loads based on MWFRS with additional C&C member design.

Wind loading based on both gable and hip roof types.

DOUGLAS FLEMING
LICENSE
No. 66648
STATE OF
FLORIDA
PROFESSIONAL ENGINEER

COA #0 278
Florida Certificate of Product Approval #FL1999
09/04/2024

****WARNING**** READ AND FOLLOW ALL NOTES ON THIS DRAWING!
****IMPORTANT**** FURNISH THIS DRAWING TO ALL CONTRACTORS INCLUDING THE INSTALLERS

Trusses require extreme care in fabricating, handling, shipping, installing and bracing. Refer to and follow the latest edition of BCSI (Building Component Safety Information, by TPI and SBCA) for safety practices prior to performing these functions. Installers shall provide temporary bracing per BCSI. Unless noted otherwise, top chord shall have properly attached structural sheathing and bottom chord shall have a properly attached rigid ceiling. Locations shown for permanent lateral restraint of webs shall have continuous lateral restraint (CLR), installed with diagonal bracing installed on the CLR per BCSI sections B3, B7, or B10, as applicable. Apply plates to each face of truss and position as shown above and on the Joint Details, unless noted otherwise. Refer to drawings 160A-Z for standard plate positions. Refer to job's General Notes page for additional information.

Alpine, a division of ITW Building Components Group Inc. shall not be responsible for any deviation from this drawing, any failure to build the truss in conformance with ANSI/TPI 1, or for handling, shipping, installation and bracing of trusses. A seal on this drawing or cover page listing this drawing, indicates acceptance of professional engineering responsibility solely for the design shown. The suitability and use of this drawing for any structure is the responsibility of the Building Designer per ANSI/TPI 1 Sec.2.

For more information see these web sites: Alpine: alpineitw.com; TPI: tpinst.org; SBCA: sbcacomponents.com; ICC: iccsafe.org; AWC: awc.org

ALPINE
AN ITW COMPANY
155 Harlem Ave
North Building, 4th Floor
Glenview, IL 60025

SEQN: 214600 / SPEC FROM: RNB	Ply: 1 Qty: 2	**Job Number:** B59525R Perri Residence **Truss Label:** T2	Cust: R 857 JRef: 1Y2Y8570005 T20 / DrwNo: 247.24.1013.59786 SSB / DF 09/03/2024

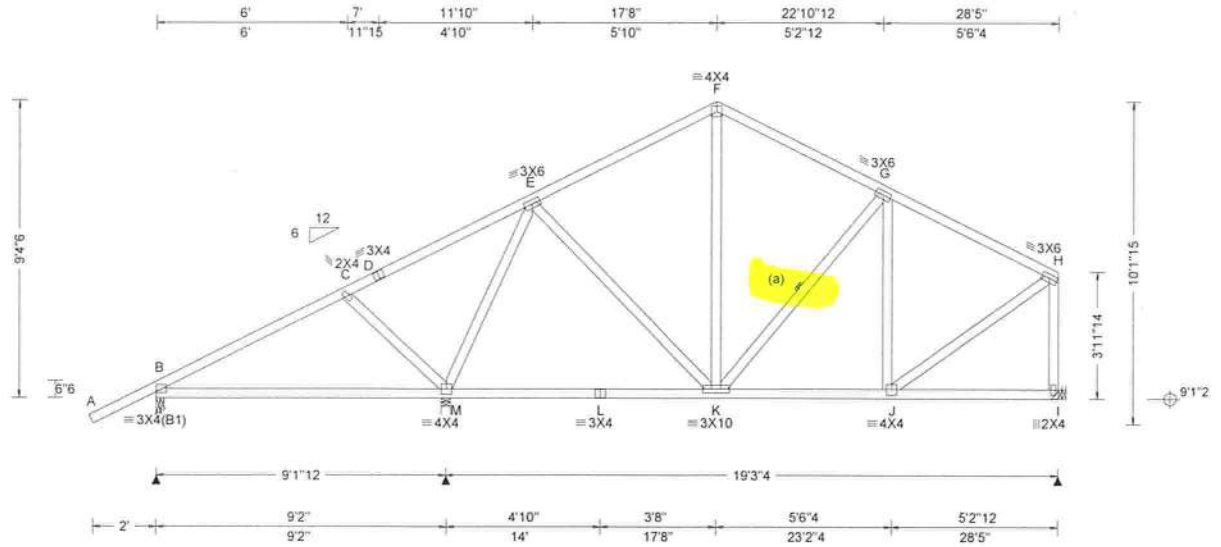

Loading Criteria (psf)

TCLL:	20.00
TCDL:	7.00
BCLL:	0.00
BCDL:	10.00
Des Ld:	37.00
NCBCLL:	10.00
Soffit:	2.00

Load Duration: 1.25
Spacing: 24.0 "

Wind Criteria
Wind Std: ASCE 7-22
Speed: 130 mph
Enclosure: Closed
Risk Category: II
EXP: B Kzt: NA
Mean Height: 15.00 ft
TCDL: 4.2 psf
BCDL: 6.0 psf
MWFRS Parallel Dist: h to 2h
C&C Dist a: 3.00 ft
Loc. from endwall: not in 9.00 ft
GCpi: 0.18
Wind Duration: 1.60

Snow Criteria (Pg,Pf in PSF)
Pg: NA Ct: NA CAT: NA
Pf: NA Ce: NA
Lu: NA Cs: NA
Snow Duration: NA

Building Code:
FBC 8th Ed. 2023 Res.
TPI Std: 2014
Rep Fac: Yes
FT/RT:20(0)/0(0)
Plate Type(s):
WAVE

Defl/CSI Criteria

PP Deflection in	loc	L/defl	L/#
VERT(LL): 0.012	K	999	360
VERT(CL): 0.022	K	999	240
HORZ(LL): 0.004	E	-	-
HORZ(TL): 0.008	B	-	-

Creep Factor: 2.0
Max TC CSI: 0.254
Max BC CSI: 0.499
Max Web CSI: 0.697

VIEW Ver: 23.02.01A.1204.18

▲ Maximum Reactions (lbs)

Loc	Gravity R+	/ R-	/ Rh	Non-Gravity / Rw	/ U	/ RL
B	444	/-	/-	/266	/-	/167
M	1232	/-	/-	/577	/-	/-
I	739	/-	/-	/387	/-	/-

Wind reactions based on MWFRS
B Brg Wid = 3.0 Min Req = 1.5 (Support)
M Brg Wid = 3.5 Min Req = 1.5 (Support)
I Brg Wid = - Min Req = -
Bearings B & M Fcperp = 425psi.
Members not listed have forces less than 375#

Maximum Top Chord Forces Per Ply (lbs)

Chords	Tens.	Comp.	Chords	Tens.	Comp.
E - F	91	-551	G - H	53	-585
F - G	93	-545			

Maximum Bot Chord Forces Per Ply (lbs)

Chords	Tens.	Comp.
K - J	481	-5

Maximum Web Forces Per Ply (lbs)

Webs	Tens.	Comp.	Webs	Tens.	Comp.
M - E	198	-798	H - I	62	-690
J - H	569	-2			

Lumber
Top chord: 2x4 SP #1;
Bot chord: 2x4 SP #1;
Webs: 2x4 SP #3;

Bracing
(a) Continuous lateral restraint equally spaced on member. Or 1x4 #3SRB SPF-S or better "T" reinforcement. 80% length of web member. Attached with 8d Box or Gun (0.113"x2.5",min.)nails @ 6" oc.

Plating Notes
Plates sized for a minimum of 3.50 sq.in./piece.

Hangers / Ties
Simpson Construction Hardware is specified based on the most current information provided by Simpson Strong-Tie. Please refer to the most recent Simpson Strong-Tie catalog for additional information.

Recommended hanger connections are based on manufacturer tested capacities and calculations. Conditions may exist that require different connections than indicated. Refer to manufacturer publication for additional information.

Bearing at location x=28'2" uses the following support conditions: 28'2"
Bearing I (28'2", 9'1"2) HUS26
Supporting Member: (2)2x6 SP #1
(14) 0.148"x3" nails into supporting member,
(4) 0.148"x3" nails into supported member.

Loading
Truss passed check for 20 psf additional bottom chord live load in areas with 42"-high x 24"-wide clearance.

Wind
Wind loads based on MWFRS with additional C&C member design.

Right end vertical not exposed to wind pressure.

Wind loading based on both gable and hip roof types.

DOUGLAS FLEMING LICENSE No. 66648 STATE OF FLORIDA PROFESSIONAL ENGINEER

COA #0 278
Florida Certificate of Product Approval #FL1999
09/04/2024

****WARNING**** READ AND FOLLOW ALL NOTES ON THIS DRAWING!
****IMPORTANT**** FURNISH THIS DRAWING TO ALL CONTRACTORS INCLUDING THE INSTALLERS

Trusses require extreme care in fabricating, handling, shipping, installing and bracing. Refer to and follow the latest edition of BCSI (Building Component Safety Information, by TPI and SBCA) for safety practices prior to performing these functions. Installers shall provide temporary bracing per BCSI. Unless noted otherwise, top chord shall have properly attached structural sheathing and bottom chord shall have a properly attached rigid ceiling. Locations shown for permanent lateral restraint of webs shall have continuous lateral restraint (CLR), installed with diagonal bracing installed on the CLR per BCSI sections B3, B7, or B10, as applicable. Apply plates to each face of truss and position as shown above and on the Joint Details, unless noted otherwise. Refer to drawings 160A-Z for standard plate positions. Refer to job's General Notes page for additional information.

Alpine, a division of ITW Building Components Group Inc. shall not be responsible for any deviation from this drawing, any failure to build the truss in conformance with ANSI/TPI 1, or for handling, shipping, installation and bracing of trusses. A seal on this drawing or cover page listing this drawing, indicates acceptance of professional engineering responsibility solely for the design shown. The suitability and use of this drawing for any structure is the responsibility of the Building Designer per ANSI/TPI 1 Sec.2.

For more information see these web sites: Alpine: alpineitw.com; TPI: tpinst.org; SBCA: sbcacomponents.com; ICC: iccsafe.org; AWC: awc.org

ALPINE AN ITW COMPANY
155 Harlem Ave
North Building, 4th Floor
Glenview, IL 60025

SEQN: 214594 / SPEC FROM: RNB	Ply: 1 Qty: 4	**Job Number:** B59525R Perri Residence **Truss Label:** T3	Cust: R 857 JRef: 1Y2Y8570005 T57 / DrwNo: 247.24.1014.00769 SSB / DF 09/03/2024

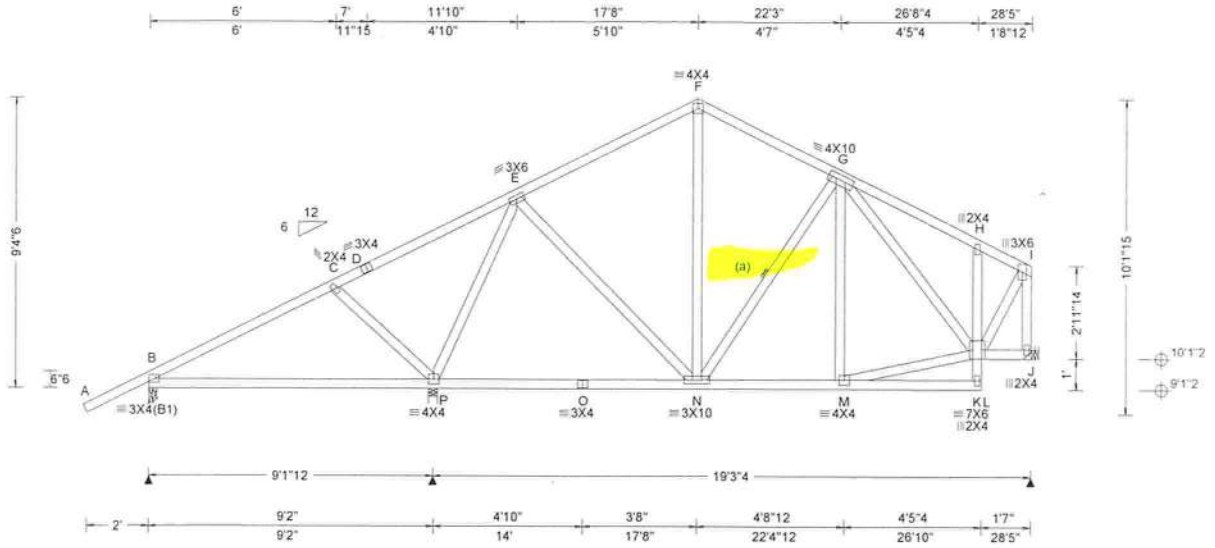

Loading Criteria (psf)

TCLL: 20.00
TCDL: 7.00
BCLL: 0.00
BCDL: 10.00
Des Ld: 37.00
NCBCLL: 10.00
Soffit: 2.00
Load Duration: 1.25
Spacing: 24.0 "

Wind Criteria

Wind Std: ASCE 7-22
Speed: 130 mph
Enclosure: Closed
Risk Category: II
EXP: B Kzt: NA
Mean Height: 15.00 ft
TCDL: 4.2 psf
BCDL: 6.0 psf
MWFRS Parallel Dist: h to 2h
C&C Dist a: 3.00 ft
Loc. from endwall: not in 9.00 ft
GCpi: 0.18
Wind Duration: 1.60

Snow Criteria (Pg,Pf in PSF)

Pg: NA Ct: NA CAT: NA
Pf: NA Ce: NA
Lu: NA Cs: NA
Snow Duration: NA

Building Code:
FBC 8th Ed. 2023 Res.
TPI Std: 2014
Rep Fac: Yes
FT/RT:20(0)/0(0)
Plate Type(s):
WAVE

Defl/CSI Criteria

PP Deflection in	loc	L/defl	L/#
VERT(LL): 0.011	N	999	360
VERT(CL): 0.020	N	999	240
HORZ(LL): 0.005	J	-	-
HORZ(TL): 0.009	J	-	-

Creep Factor: 2.0
Max TC CSI: 0.254
Max BC CSI: 0.500
Max Web CSI: 0.689

VIEW Ver: 23.02.01A.1204.18

▲ Maximum Reactions (lbs)

	Gravity			Non-Gravity		
Loc	R+	/ R-	/ Rh	/ Rw	/ U	/ RL
B	447	/-	/-	/268	/-	/167
P	1222	/-	/-	/573	/-	/-
J	742	/-	/-	/388	/-	/-

Wind reactions based on MWFRS
B Brg Wid = 3.0 Min Req = 1.5 (Support)
P Brg Wid = 3.5 Min Req = 1.5 (Support)
J Brg Wid = - Min Req = -
Bearings B & P Fcperp = 425psi.
Members not listed have forces less than 375#

Maximum Top Chord Forces Per Ply (lbs)

Chords	Tens.	Comp.	Chords	Tens.	Comp.
E - F	91	-555	G - H	91	-450
F - G	94	-535	H - I	33	-408

Maximum Bot Chord Forces Per Ply (lbs)

Chords	Tens.	Comp.
N - M	478	0

Maximum Web Forces Per Ply (lbs)

Webs	Tens.	Comp.	Webs	Tens.	Comp.
P - E	197	-789	K - I	642	-38
M - K	478	0	I - J	46	-722

Lumber

Top chord: 2x4 SP #1;
Bot chord: 2x4 SP #1;
Webs: 2x4 SP #3;

Bracing

(a) Continuous lateral restraint equally spaced on member. Or 1x4 #3SRB SPF-S or better "T" reinforcement. 80% length of web member. Attached with 8d Box or Gun (0.113"x2.5",min.)nails @ 6" oc.

Plating Notes

Plates sized for a minimum of 3.50 sq.in./piece.

Hangers / Ties

Simpson Construction Hardware is specified based on the most current information provided by Simpson Strong-Tie. Please refer to the most recent Simpson Strong-Tie catalog for additional information.

Recommended hanger connections are based on manufacturer tested capacities and calculations. Conditions may exist that require different connections than indicated. Refer to manufacturer publication for additional information.

Bearing at location x=28'2" uses the following support conditions: 28'2"
Bearing J (28'2", 10'1"2) HUS26
Supporting Member: (2)2x8 SP SS Dense
(14) 0.148"x3" nails into supporting member,
(4) 0.148"x3" nails into supported member.

Loading

Truss passed check for 20 psf additional bottom chord live load in areas with 42"-high x 24"-wide clearance.

Wind

Wind loads based on MWFRS with additional C&C member design.

Right end vertical not exposed to wind pressure.

Wind loading based on both gable and hip roof types.

DOUGLAS FLEMING
LICENSE
No. 66648
STATE OF
FLORIDA
PROFESSIONAL ENGINEER

COA #0 24
Florida Certificate of Product Approval #FL1999
09/04/2024

WARNING READ AND FOLLOW ALL NOTES ON THIS DRAWING!
IMPORTANT FURNISH THIS DRAWING TO ALL CONTRACTORS INCLUDING THE INSTALLERS

Trusses require extreme care in fabricating, handling, shipping, installing and bracing. Refer to and follow the latest edition of BCSI (Building Component Safety Information, by TPI and SBCA) for safety practices prior to performing these functions. Installers shall provide temporary bracing per BCSI. Unless noted otherwise, top chord shall have properly attached structural sheathing and bottom chord shall have a properly attached rigid ceiling. Locations shown for permanent lateral restraint of webs shall have continuous lateral restraint (CLR), installed with diagonal bracing installed on the CLR per BCSI sections B3, B7, or B10, as applicable. Apply plates to each face of truss and position as shown above and on the Joint Details, unless noted otherwise. Refer to drawings 160A-Z for standard plate positions. Refer to job's General Notes page for additional information.

Alpine, a division of ITW Building Components Group Inc. shall not be responsible for any deviation from this drawing, any failure to build the truss in conformance with ANSI/TPI 1, or for handling, shipping, installation and bracing of trusses. A seal on this drawing or cover page listing this drawing, indicates acceptance of professional engineering responsibility solely for the design shown. The suitability and use of this drawing for any structure is the responsibility of the Building Designer per ANSI/TPI 1 Sec.2.

For more information see these web sites: Alpine: alpineitw.com; TPI: tpinst.org; SBCA: sbcacomponents.com; ICC: iccsafe.org; AWC: awc.org

ALPINE
AN ITW COMPANY
155 Harlem Ave
North Building, 4th Floor
Glenview, IL 60025

SEQN: 214687 / SPEC FROM: RNB	Ply: 1 Qty: 1	**Job Number:** B59525R Perri Residence **Truss Label:** T4	Cust: R 857 JRef: 1Y2Y8570005 T22 / DrwNo: 247.24.1014.00301 SSB / DF 09/03/2024

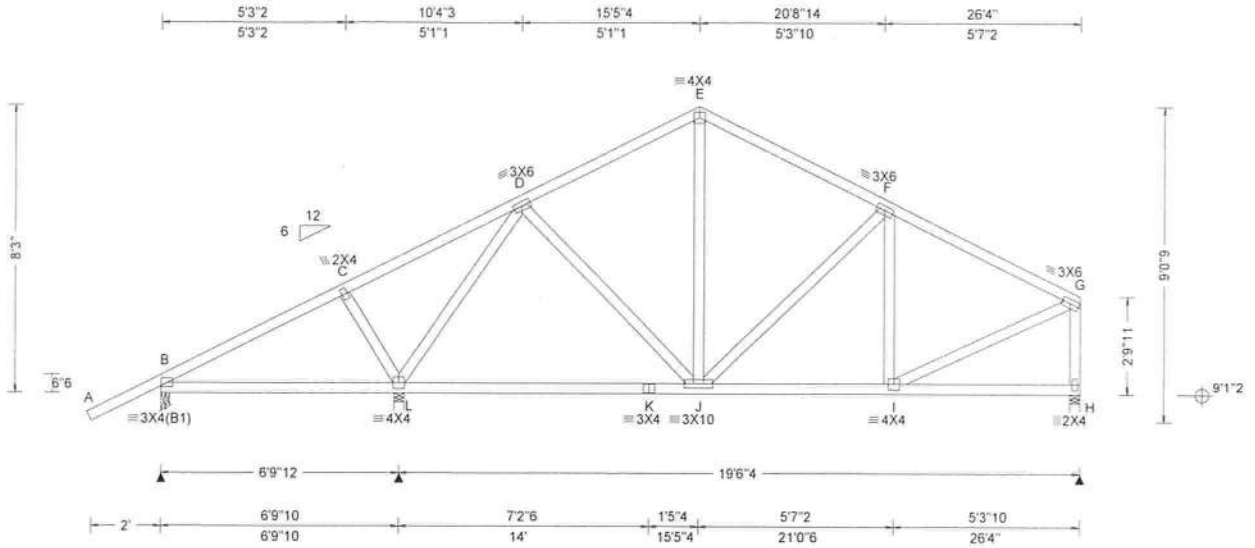

Loading Criteria (psf)	**Wind Criteria**	**Snow Criteria** (Pg,Pf in PSF)	**Defl/CSI Criteria**
TCLL: 20.00	Wind Std: ASCE 7-22	Pg: NA Ct: NA CAT: NA	PP Deflection in loc L/defl L/#
TCDL: 7.00	Speed: 130 mph	Pf: NA Ce: NA	VERT(LL): 0.013 F 999 360
BCLL: 0.00	Enclosure: Closed	Lu: NA Cs: NA	VERT(CL): 0.025 F 999 240
BCDL: 10.00	Risk Category: II	Snow Duration: NA	HORZ(LL): 0.005 D - -
Des Ld: 37.00	EXP: B Kzt: NA		HORZ(TL): 0.009 D - -
NCBCLL: 10.00	Mean Height: 15.00 ft	Building Code:	Creep Factor: 2.0
Soffit: 2.00	TCDL: 4.2 psf	FBC 8th Ed. 2023 Res.	Max TC CSI: 0.248
Load Duration: 1.25	BCDL: 6.0 psf	TPI Std: 2014	Max BC CSI: 0.396
Spacing: 24.0 "	MWFRS Parallel Dist: h to 2h	Rep Fac: Yes	Max Web CSI: 0.648
	C&C Dist a: 3.00 ft	FT/RT:20(0)/0(0)	
	Loc. from endwall: not in 9.00 ft	Plate Type(s):	
	GCpi: 0.18	WAVE	VIEW Ver: 23.02.01A.1204.18
	Wind Duration: 1.60		

▲ Maximum Reactions (lbs)

	Gravity			Non-Gravity		
Loc	R+	/ R-	/ Rh	/ Rw	/ U	/ RL
B	361	/-	/-	/182	/-	/187
L	1055	/-	/-	/576	/-	/-
H	725	/-	/-	/380	/-	/-

Wind reactions based on MWFRS
B Brg Wid = 3.0 Min Req = 1.5 (Support)
L Brg Wid = 3.5 Min Req = 1.5 (Truss)
H Brg Wid = 3.5 Min Req = 1.5 (Support)
Bearings B, L, & H Fcperp = 425psi.
Members not listed have forces less than 375#

Maximum Top Chord Forces Per Ply (lbs)

Chords	Tens.	Comp.	Chords	Tens.	Comp.
D - E	121	-573	F - G	85	-698
E - F	110	-580			

Maximum Bot Chord Forces Per Ply (lbs)

Chords	Tens.	Comp.
J - I	580	-59

Maximum Web Forces Per Ply (lbs)

Webs	Tens.	Comp.	Webs	Tens.	Comp.
L - D	131	-790	G - H	73	-678
I - G	621	-30			

Lumber

Top chord: 2x4 SP #1;
Bot chord: 2x4 SP #1;
Webs: 2x4 SP #3;

Plating Notes

Plates sized for a minimum of 3.50 sq.in./piece.

Wind

Wind loads based on MWFRS with additional C&C member design.

Right end vertical not exposed to wind pressure.

Wind loading based on both gable and hip roof types.

DOUGLAS FLEMING
LICENSE
No. 66648
STATE OF
FLORIDA
PROFESSIONAL ENGINEER

COA #0278
Florida Certificate of Product Approval #FL1999
09/04/2024

WARNING READ AND FOLLOW ALL NOTES ON THIS DRAWING!
IMPORTANT FURNISH THIS DRAWING TO ALL CONTRACTORS INCLUDING THE INSTALLERS

Trusses require extreme care in fabricating, handling, shipping, installing and bracing. Refer to and follow the latest edition of BCSI (Building Component Safety Information, by TPI and SBCA) for safety practices prior to performing these functions. Installers shall provide temporary bracing per BCSI. Unless noted otherwise, top chord shall have properly attached structural sheathing and bottom chord shall have a properly attached rigid ceiling. Locations shown for permanent lateral restraint of webs shall have continuous lateral restraint (CLR), installed with diagonal bracing installed on the CLR per BCSI sections B3, B7, or B10, as applicable. Apply plates to each face of truss and position as shown above and on the Joint Details, unless noted otherwise. Refer to drawings 160A-Z for standard plate positions. Refer to job's General Notes page for additional information.

Alpine, a division of ITW Building Components Group Inc. shall not be responsible for any deviation from this drawing, any failure to build the truss in conformance with ANSI/TPI 1, or for handling, shipping, installation and bracing of trusses. A seal on this drawing or cover page listing this drawing, indicates acceptance of professional engineering responsibility solely for the design shown. The suitability and use of this drawing for any structure is the responsibility of the Building Designer per ANSI/TPI 1 Sec.2.

For more information see these web sites: Alpine: alpineitw.com; TPI: tpinst.org; SBCA: sbcacomponents.com; ICC: iccsafe.org; AWC: awc.org

ALPINE
AN ITW COMPANY
155 Harlem Ave
North Building, 4th Floor
Glenview, IL 60025

SEQN: 214720 / COMN FROM: RNB	Ply: 1 Qty: 2	**Job Number:** B59525R Perri Residence **Truss Label:** T5	Cust: R 857 JRef: 1Y2Y8570005 T16 / DrwNo: 247.24.1013.59598 SSB / DF 09/03/2024

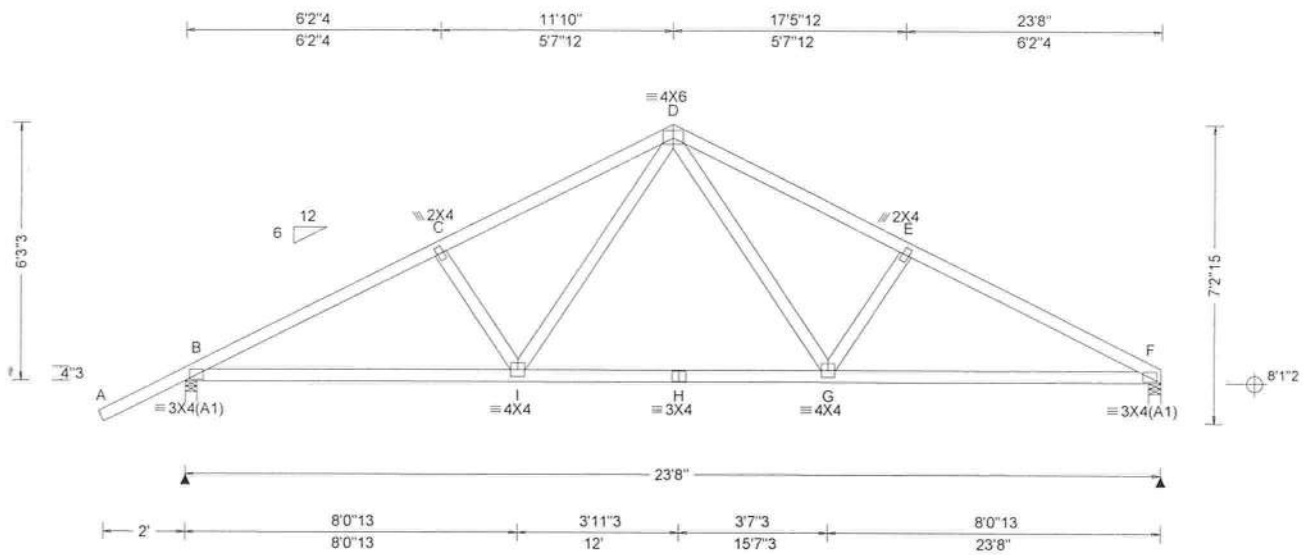

Loading Criteria (psf)

TCLL:	20.00
TCDL:	7.00
BCLL:	0.00
BCDL:	10.00
Des Ld:	37.00
NCBCLL:	10.00
Soffit:	2.00

Load Duration: 1.25
Spacing: 24.0 "

Wind Criteria
Wind Std: ASCE 7-22
Speed: 130 mph
Enclosure: Closed
Risk Category: II
EXP: B Kzt: NA
Mean Height: 15.00 ft
TCDL: 4.2 psf
BCDL: 6.0 psf
MWFRS Parallel Dist: h/2 to h
C&C Dist a: 3.00 ft
Loc. from endwall: not in 9.00 ft
GCpi: 0.18
Wind Duration: 1.60

Snow Criteria (Pg,Pf in PSF)
Pg: NA Ct: NA CAT: NA
Pf: NA Ce: NA
Lu: NA Cs: NA
Snow Duration: NA

Building Code:
FBC 8th Ed. 2023 Res.
TPI Std: 2014
Rep Fac: Yes
FT/RT:20(0)/0(0)
Plate Type(s):
WAVE

Defl/CSI Criteria

PP Deflection in	loc	L/defl	L/#
VERT(LL): 0.059	I	999	360
VERT(CL): 0.104	I	999	240
HORZ(LL): 0.023	F	-	-
HORZ(TL): 0.041	F	-	-

Creep Factor: 2.0
Max TC CSI: 0.245
Max BC CSI: 0.446
Max Web CSI: 0.216

VIEW Ver: 23.02.01A.1204.18

▲ Maximum Reactions (lbs)

	Gravity			Non-Gravity		
Loc	R+	/ R-	/ Rh	/ Rw	/ U	/ RL
B	1076	/-	/-	/545	/51	/126
F	939	/-	/-	/463	/27	/-

Wind reactions based on MWFRS
B Brg Wid = 3.5 Min Req = 1.5 (Support)
F Brg Wid = 3.5 Min Req = 1.5 (Support)
Bearings B & F Fcperp = 425psi.
Members not listed have forces less than 375#

Maximum Top Chord Forces Per Ply (lbs)

Chords	Tens.	Comp.	Chords	Tens.	Comp.
B - C	128	- 1613	D - E	153	- 1469
C - D	140	- 1445	E - F	140	- 1639

Maximum Bot Chord Forces Per Ply (lbs)

Chords	Tens.	Comp.	Chords	Tens.	Comp.
B - I	1378	- 76	H - G	946	- 11
I - H	946	- 11	G - F	1409	- 75

Maximum Web Forces Per Ply (lbs)

Webs	Tens.	Comp.	Webs	Tens.	Comp.
I - D	528	- 4	D - G	566	- 18

Lumber

Top chord: 2x4 SP #1;
Bot chord: 2x4 SP #1;
Webs: 2x4 SP #3;

Plating Notes

Plates sized for a minimum of 3.50 sq.in./piece.

Loading

Truss passed check for 20 psf additional bottom chord live load in areas with 42"-high x 24"-wide clearance.

Wind

Wind loads based on MWFRS with additional C&C member design.

Wind loading based on both gable and hip roof types.

DOUGLAS FLEMING
LICENSE
No. 66648
STATE OF
FLORIDA
PROFESSIONAL ENGINEER

COA #0 278
Florida Certificate of Product Approval #FL1999
09/04/2024

****WARNING**** READ AND FOLLOW ALL NOTES ON THIS DRAWING!
****IMPORTANT**** FURNISH THIS DRAWING TO ALL CONTRACTORS INCLUDING THE INSTALLERS

Trusses require extreme care in fabricating, handling, shipping, installing and bracing. Refer to and follow the latest edition of BCSI (Building Component Safety Information, by TPI and SBCA) for safety practices prior to performing these functions. Installers shall provide temporary bracing per BCSI. Unless noted otherwise, top chord shall have properly attached structural sheathing and bottom chord shall have a properly attached rigid ceiling. Locations shown for permanent lateral restraint of webs shall have continuous lateral restraint (CLR), installed with diagonal bracing installed on the CLR per BCSI sections B3, B7, or B10, as applicable. Apply plates to each face of truss and position as shown above and on the Joint Details, unless noted otherwise. Refer to drawings 160A-Z for standard plate positions. Refer to job's General Notes page for additional information.

Alpine, a division of ITW Building Components Group Inc. shall not be responsible for any deviation from this drawing, any failure to build the truss in conformance with ANSI/TPI 1, or for handling, shipping, installation and bracing of trusses. A seal on this drawing or cover page listing this drawing, indicates acceptance of professional engineering responsibility solely for the design shown. The suitability and use of this drawing for any structure is the responsibility of the Building Designer per ANSI/TPI 1 Sec.2.

For more information see these web sites: Alpine: alpineitw.com; TPI: tpinst.org; SBCA: sbcacomponents.com; ICC: iccsafe.org; AWC: awc.org

ALPINE
AN ITW COMPANY
155 Harlem Ave
North Building, 4th Floor
Glenview, IL 60025

SEQN: 214744 / SPEC FROM: RNB	Ply: 1 Qty: 1	**Job Number:** B59525R Perri Residence **Truss Label:** T6	Cust: R 857 JRef: 1Y2Y8570005 T4 / DrwNo: 247.24.1014.00786 SSB / DF 09/03/2024

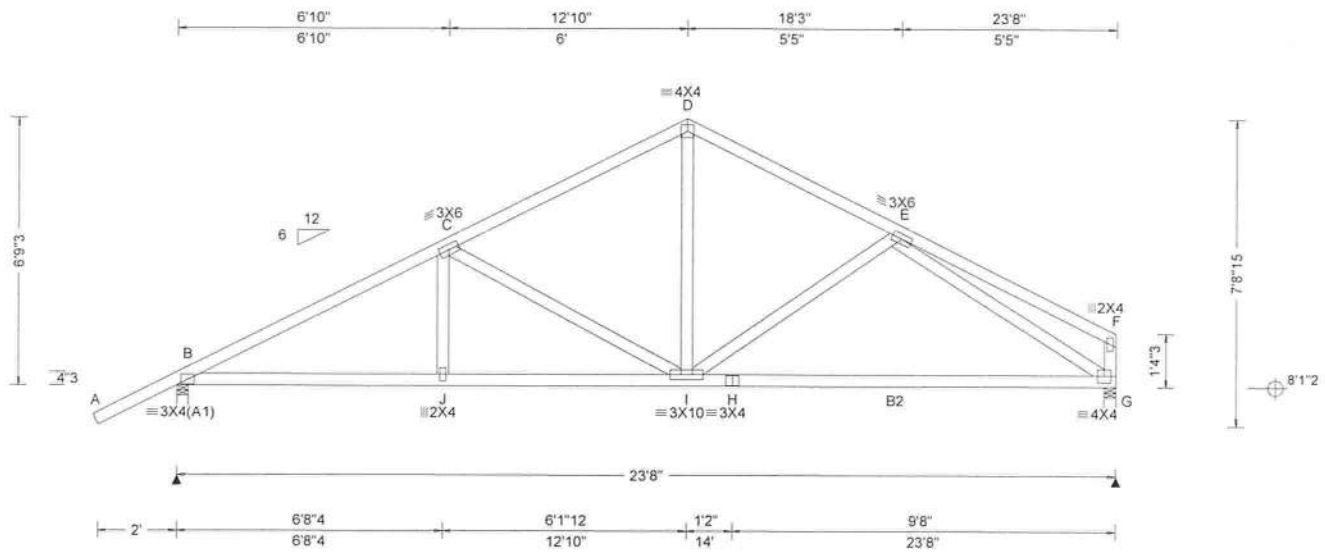

Loading Criteria (psf)

TCLL:	20.00
TCDL:	7.00
BCLL:	0.00
BCDL:	10.00
Des Ld:	37.00
NCBCLL:	10.00
Soffit:	2.00

Load Duration: 1.25
Spacing: 24.0 "

Wind Criteria
Wind Std: ASCE 7-22
Speed: 130 mph
Enclosure: Closed
Risk Category: II
EXP: B Kzt: NA
Mean Height: 15.00 ft
TCDL: 4.2 psf
BCDL: 6.0 psf
MWFRS Parallel Dist: h to 2h
C&C Dist a: 3.00 ft
Loc. from endwall: not in 9.00 ft
GCpi: 0.18
Wind Duration: 1.60

Snow Criteria (Pg,Pf in PSF)
Pg: NA Ct: NA CAT: NA
Pf: NA Ce: NA
Lu: NA Cs: NA
Snow Duration: NA

Building Code:
FBC 8th Ed. 2023 Res.
TPI Std: 2014
Rep Fac: Yes
FT/RT:20(0)/0(0)
Plate Type(s):
WAVE

Defl/CSI Criteria

PP Deflection in	loc	L/defl	L/#
VERT(LL): 0.045	J	999	360
VERT(CL): 0.085	J	999	240
HORZ(LL): 0.020	F	-	-
HORZ(TL): 0.038	F	-	-

Creep Factor: 2.0
Max TC CSI: 0.267
Max BC CSI: 0.767
Max Web CSI: 0.910

VIEW Ver: 23.02.01A.1204.18

▲ Maximum Reactions (lbs)

	Gravity			Non-Gravity		
Loc	R+	/ R-	/ Rh	/ Rw	/ U	/ RL
B	1031	/-	/-	/554	/-	/144
G	883	/-	/-	/448	/-	/-

Wind reactions based on MWFRS
B Brg Wid = 3.5 Min Req = 1.5 (Support)
G Brg Wid = 3.5 Min Req = 1.5 (Support)
Bearings B & G Fcperp = 425psi.
Members not listed have forces less than 375#

Maximum Top Chord Forces Per Ply (lbs)

Chords	Tens.	Comp.	Chords	Tens.	Comp.
B - C	112	- 1492	D - E	125	- 1013
C - D	124	- 1022			

Maximum Bot Chord Forces Per Ply (lbs)

Chords	Tens.	Comp.	Chords	Tens.	Comp.
B - J	1267	- 109	I - H	973	- 115
J - I	1264	- 110	H - G	973	- 115

Maximum Web Forces Per Ply (lbs)

Webs	Tens.	Comp.	Webs	Tens.	Comp.
C - I	97	- 484	E - G	148	- 1100
D - I	564	0			

Lumber
Top chord: 2x4 SP #1;
Bot chord: 2x4 SP #1; B2 2x4 SP SS Dense;
Webs: 2x4 SP #3;

Plating Notes
Plates sized for a minimum of 3.50 sq.in./piece.

Wind
Wind loads based on MWFRS with additional C&C member design.
Right end vertical not exposed to wind pressure.
Wind loading based on both gable and hip roof types.

DOUGLAS FLEMING
LICENSE
No. 66648
STATE OF
FLORIDA
PROFESSIONAL ENGINEER

COA #0 278
Florida Certificate of Product Approval #FL1999
09/04/2024

****WARNING**** READ AND FOLLOW ALL NOTES ON THIS DRAWING!
****IMPORTANT**** FURNISH THIS DRAWING TO ALL CONTRACTORS INCLUDING THE INSTALLERS

Trusses require extreme care in fabricating, handling, shipping, installing and bracing. Refer to and follow the latest edition of BCSI (Building Component Safety Information, by TPI and SBCA) for safety practices prior to performing these functions. Installers shall provide temporary bracing per BCSI. Unless noted otherwise, top chord shall have properly attached structural sheathing and bottom chord shall have a properly attached rigid ceiling. Locations shown for permanent lateral restraint of webs shall have continuous lateral restraint (CLR), installed with diagonal bracing installed on the CLR per BCSI sections B3, B7, or B10, as applicable. Apply plates to each face of truss and position as shown above and on the Joint Details, unless noted otherwise. Refer to drawings 160A-Z for standard plate positions. Refer to job's General Notes page for additional information.

Alpine, a division of ITW Building Components Group Inc. shall not be responsible for any deviation from this drawing, any failure to build the truss in conformance with ANSI/TPI 1, or for handling, shipping, installation and bracing of trusses. A seal on this drawing or cover page listing this drawing, indicates acceptance of professional engineering responsibility solely for the design shown. The suitability and use of this drawing for any structure is the responsibility of the Building Designer per ANSI/TPI 1 Sec.2.

For more information see these web sites: Alpine: alpineitw.com; TPI: tpinst.org; SBCA: sbcacomponents.com; ICC: iccsafe.org; AWC: awc.org

ALPINE
AN ITW COMPANY
155 Harlem Ave
North Building, 4th Floor
Glenview, IL 60025

SEQN: 214790 / SPEC FROM: RNB	Ply: 1 Qty: 2	**Job Number:** B59525R Perri Residence **Truss Label:** T7	Cust: R 857 JRef: 1Y2Y8570005 T61 / DrwNo: 247.24.1013.59069 SSB / DF 09/03/2024

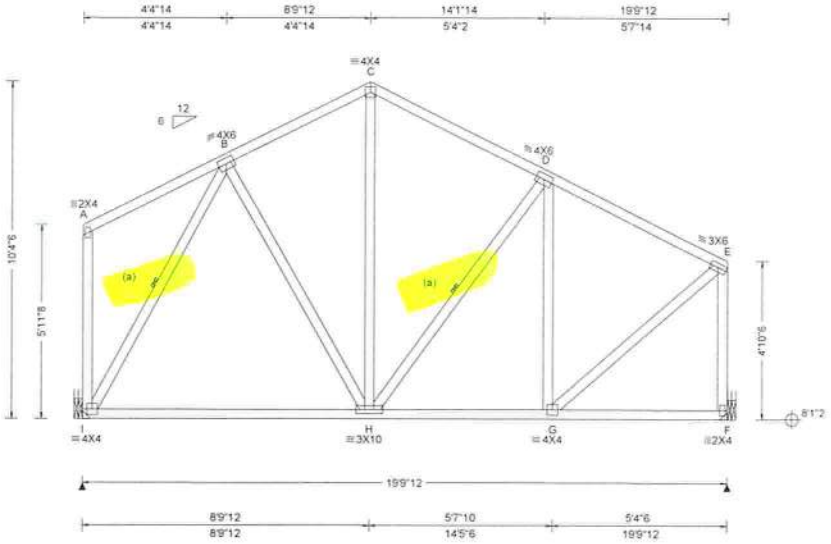

Loading Criteria (psf)		**Wind Criteria**	**Snow Criteria** (Pg,Pf in PSF)	**Defl/CSI Criteria**				
TCLL:	20.00	Wind Std: ASCE 7-22	Pg: NA Ct: NA CAT: NA	PP Deflection in	loc	L/defl	L/#	
TCDL:	7.00	Speed: 130 mph	Pf: NA Ce: NA	VERT(LL):	0.016	H	999	360
BCLL:	0.00	Enclosure: Closed	Lu: NA Cs: NA	VERT(CL):	0.027	H	999	240
BCDL:	10.00	Risk Category: II	Snow Duration: NA	HORZ(LL):	0.007	B	-	-
Des Ld:	37.00	EXP: B Kzt: NA		HORZ(TL):	0.011	B	-	-
NCBCLL:	10.00	Mean Height: 15.71 ft	Building Code:	Creep Factor: 2.0				
Soffit:	2.00	TCDL: 4.2 psf	FBC 8th Ed. 2023 Res.	Max TC CSI:	0.334			
Load Duration: 1.25		BCDL: 6.0 psf	TPI Std: 2014	Max BC CSI:	0.649			
Spacing: 24.0 "		MWFRS Parallel Dist: h to 2h	Rep Fac: Yes	Max Web CSI:	0.752			
		C&C Dist a: 3.00 ft	FT/RT:20(0)/0(0)					
		Loc. from endwall: not in 9.00 ft	Plate Type(s):					
		GCpi: 0.18	WAVE	VIEW Ver: 23.02.01A.1204.18				
		Wind Duration: 1.60						

▲ Maximum Reactions (lbs)

	Gravity			Non-Gravity		
Loc	R+	/ R-	/ Rh	/ Rw	/ U	/ RL
I	912	/-	/-	/369	/-	/211
F	851	/-	/-	/368	/-	/-

Wind reactions based on MWFRS
I Brg Wid = - Min Req = -
F Brg Wid = - Min Req = -
Members not listed have forces less than 375#

Maximum Top Chord Forces Per Ply (lbs)

Chords	Tens.	Comp.	Chords	Tens.	Comp.
B - C	161	-589	D - E	103	-619
C - D	166	-607			

Maximum Bot Chord Forces Per Ply (lbs)

Chords	Tens.	Comp.	Chords	Tens.	Comp.
I - H	378	-81	H - G	513	-53

Maximum Web Forces Per Ply (lbs)

Webs	Tens.	Comp.	Webs	Tens.	Comp.
I - B	154	-779	E - F	121	-803
G - E	662	-66			

Lumber

Top chord: 2x4 SP #1;
Bot chord: 2x4 SP #1;
Webs: 2x4 SP #3;

Bracing

(a) Continuous lateral restraint equally spaced on member. Or 1x4 #3SRB SPF-S or better "T" reinforcement. 80% length of web member. Attached with 8d Box or Gun (0.113"x2.5",min.)nails @ 6" oc.

Plating Notes

Plates sized for a minimum of 3.50 sq.in./piece.

Hangers / Ties

(J) Hanger Support Required, by others

Loading

Truss passed check for 20 psf additional bottom chord live load in areas with 42"-high x 24"-wide clearance.

Wind

Wind loads based on MWFRS with additional C&C member design.

End verticals not exposed to wind pressure.

Wind loading based on both gable and hip roof types.

DOUGLAS FLEMING
LICENSE
No. 66648
STATE OF
FLORIDA
PROFESSIONAL ENGINEER

COA #0 278
Florida Certificate of Product Approval #FL1999
09/04/2024

****WARNING**** READ AND FOLLOW ALL NOTES ON THIS DRAWING!
****IMPORTANT**** FURNISH THIS DRAWING TO ALL CONTRACTORS INCLUDING THE INSTALLERS

Trusses require extreme care in fabricating, handling, shipping, installing and bracing. Refer to and follow the latest edition of BCSI (Building Component Safety Information, by TPI and SBCA) for safety practices prior to performing these functions. Installers shall provide temporary bracing per BCSI. Unless noted otherwise, top chord shall have properly attached structural sheathing and bottom chord shall have a properly attached rigid ceiling. Locations shown for permanent lateral restraint of webs shall have continuous lateral restraint (CLR), installed with diagonal bracing installed on the CLR per BCSI sections B3, B7, or B10, as applicable. Apply plates to each face of truss and position as shown above and on the Joint Details, unless noted otherwise. Refer to drawings 160A-Z for standard plate positions. Refer to job's General Notes page for additional information.

Alpine, a division of ITW Building Components Group Inc. shall not be responsible for any deviation from this drawing, any failure to build the truss in conformance with ANSI/TPI 1, or for handling, shipping, installation and bracing of trusses. A seal on this drawing or cover page listing this drawing, indicates acceptance of professional engineering responsibility solely for the design shown. The suitability and use of this drawing for any structure is the responsibility of the Building Designer per ANSI/TPI 1 Sec.2.

For more information see these web sites: Alpine: alpineitw.com; TPI: tpinst.org; SBCA: sbcacomponents.com; ICC: iccsafe.org; AWC: awc.org

ALPINE
AN ITW COMPANY
155 Harlem Ave
North Building, 4th Floor
Glenview, IL 60025

NAIL SPACING DETAIL

MINIMUM SPACING FOR SINGLE BLOCK IS SHOWN. DOUBLE NAIL SPACINGS AND STAGGER NAILING FOR TWO BLOCKS. GREATER SPACING MAY BE REQUIRED TO AVOID SPLITTING.

BLOCK LOCATION, SIZE, LENGTH,GRADE AND TOTAL NUMBER AND TYPE OF NAILS ARE TO BE SPECIFIED ON SEALED DESIGN REFERENCING THIS DETAIL.

LOAD PERPENDICULAR TO GRAIN
A - EDGE DISTANCE AND SPACING BETWEEN STAGGERED ROWS OF NAILS (6 NAIL DIAMETERS)
B - SPACING OF NAILS IN A ROW (12 NAIL DIAMETERS)
C - END DISTANCE (15 NAIL DIAMETERS)

LOAD PARALLEL TO GRAIN
A - EDGE DISTANCE (6 NAIL DIAMETERS)
C - SPACING OF NAILS IN A ROW AND END DISTANCE (15 NAIL DIAMETERS)
D - SPACING BETWEEN STAGGERED ROWS OF NAILS (7 1/2 NAIL DIAMETERS)

IF NAIL HOLES ARE PREBORED, SOME SPACING MAY BE REDUCED BY THE AMOUNTS GIVEN BELOW:
* SPACING MAY BE REDUCED BY 50%
** SPACING MAY BE REDUCED BY 33%

MINIMUM NAIL SPACING DISTANCES

NAIL TYPE	DISTANCES A	B*	C**	D
8d BOX (0.113"X 2.5",MIN)	3/4"	1 3/8"	1 3/4"	7/8"
10d BOX (0.128"X 3.",MIN)	7/8"	1 5/8"	2"	1"
12d BOX (0.128"X 3.25",MIN)	7/8"	1 5/8"	2"	1"
16d BOX (0.135"X 3.5",MIN)	7/8"	1 5/8"	2 1/8"	1 1/8"
20d BOX (0.148"X 4.",MIN)	1"	1 7/8"	2 1/4"	1 1/8"
8d COMMON (0.131"X 2.5",MIN)	7/8"	1 5/8"	2"	1"
10d COMMON (0.148"X 3.",MIN)	1"	1 7/8"	2 1/4"	1 1/8"
12d COMMON (0.148"X 3.25",MIN)	1"	1 7/8"	2 1/4"	1 1/8"
16d COMMON (0.162"X 3.5",MIN)	1'	2"	2 1/2"	1 1/4"
GUN (0.120"X 2.5",MIN)	3/4"	1 1/2"	1 7/8"	1"
GUN (0.131"X 2.5",MIN)	7/8"	1 5/8"	2"	1"
GUN (0.120"X 3.",MIN)	3/4"	1 1/2"	1 7/8"	1"
GUN (0.131"X 3.",MIN)	7/8"	1 5/8"	2"	1"

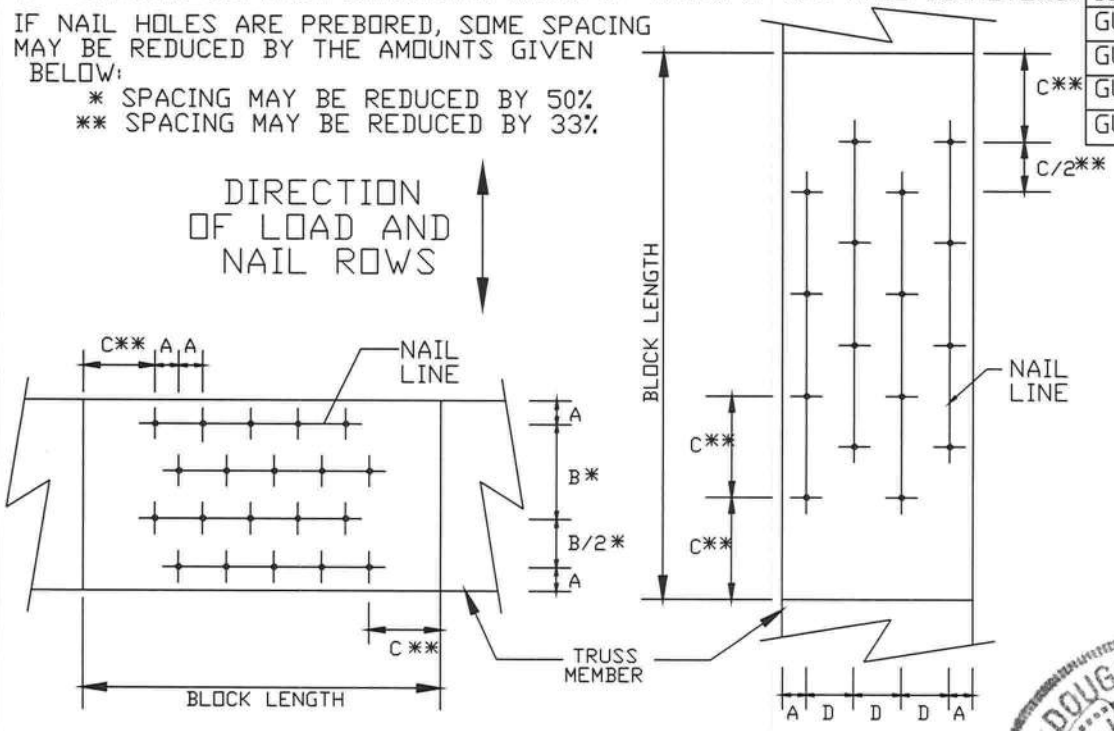

LOAD APPLIED PERPENDICULAR TO GRAIN LOAD APPLIED PARALLEL TO GRAIN

DOUGLAS FLEMING LICENSE No. 66548 STATE OF FLORIDA PROFESSIONAL ENGINEER
09/04/2024
COA #0 278

ALPINE AN ITW COMPANY
155 Harlem Ave
North Building, 4th Floor
Glenview, IL 60025

WARNING READ AND FOLLOW ALL NOTES ON THIS DRAWING!
IMPORTANT FURNISH THIS DRAWING TO ALL CONTRACTORS INCLUDING THE INSTALLER:

Trusses require extreme care in fabricating, handling, shipping, installing and bracing. Refer to and follow the latest edition of BCSI (Building Component Safety Information, by TPI and SBCA) for safety practices prior to performing these functions. Installers shall provide temporary bracing per BCSI. Unless noted otherwise, top chord shall have properly attached structural sheathing and bottom chord shall have a properly attached rigid ceiling. Locations shown for permanent lateral restraint of webs shall have bracing installed per BCSI sections B3, B7 or B10, as applicable. Apply plates to each face of truss and position as shown above and on the Joint Details, unless noted otherwise. Refer to drawings 160A-Z for standard plate positions.

Alpine, a division of ITW Building Components Group Inc. shall not be responsible for any deviation from this drawing, any failure to build the truss in conformance with ANSI/TPI 1, or for handling, shipping, installation & bracing of trusses.

A seal on this drawing or cover page listing this drawing, indicates acceptance of professional engineering responsibility solely for the design shown. The suitability and use of this drawing for any structure is the responsibility of the Building Designer per ANSI/TPI 1 Sec.2.

For more information see this job's general notes page and these web sites:

REF	NAIL SPACE
DATE	10/01/14
DRWG	CNNAILSP1014

Piggyback Detail - ASCE 7-16: 160 mph, 30' Mean Height, Enclosed, Exposure C, Kzt=1.00

160 mph Wind, 30.00 ft Mean Hgt, ASCE 7-16, Enclosed Bldg. located anywhere in roof, Exp C, Wind DL= 5.0 psf (min), Kzt=1.0.
Or 140 mph wind, 30.00 ft Mean Hgt, ASCE 7-16, Enclosed Bldg. located anywhere in roof, Exp D, wind DL= 5.0 psf (min), Kzt=1.0.

Note: Top chords of trusses supporting piggyback cap trusses must be adequately braced by sheathing or purlins. The building Engineer of Record shall provide diagonal bracing or any other suitable anchorage to permanently restrain purlins, and lateral bracing for out of plane loads over gable ends.

Maximum truss spacing is 24' o.c. detail is not applicable if cap supports additional loads such as cupola, steeple, chimney or drag strut loads.

** Refer to Engineer's sealed truss design drawing for piggyback and base truss specifications.

Detail A : Purlin Spacing = 24" o.c. or less

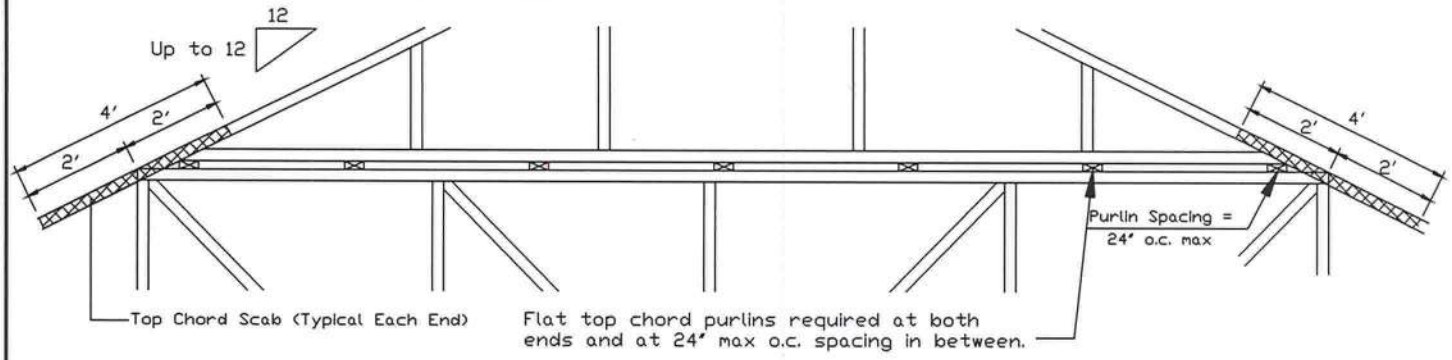

Piggyback cap truss slant nailed to all top chord purlin bracing with (2) 16d box nails (0.135"x3.5") and secure top chord with 2x4 #3 grade scab (1 side only at each end) attached with 2 rows of 10d box nails (0.128"x3") at 4' o.c.

Attach purlin bracing to the flat top chord using (2) 16d box nails (0.135"x3.5").

The top chord #3 grade 2x4 scab may be replaced with either of the following: (1) 3X8 Trulox plate attached with (8) 0.120"x1.375" nails, (4) into cap TC & (4) into base truss TC or (1) 28PB wave piggyback plate plated to the piggyback truss TC and attached to the base truss TC with (4) 0.120"x1.375" nails. Note: Nailing thru holes of wave plate is acceptable.

Detail B : Purlin Spacing > 24" o.c.

Piggyback cap truss slant nailed to all top chord purlin bracing with (2) 16d box nails (0.135"x3.5") and secure top chord with 2x4 #3 grade scab (1 side only at each end) attached with 2 rows of 10d box nails (0.128"x3") at 4' o.c.

Attach purlin bracing to the flat top chord using a minimum of (2) 16d box nails (0.135"x3.5").

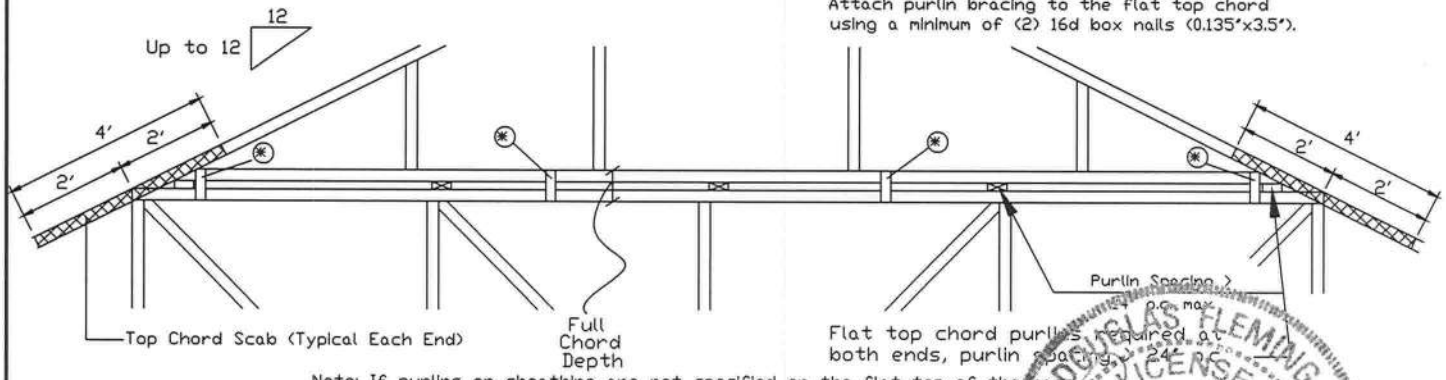

Note: If purlins or sheathing are not specified on the flat top of the base truss, purlins must be installed at 24" o.c. max. and use Detail A.

* In addition, provide connection with one of the following methods:

Trulox
Use 3X8 Trulox plates for 2x4 chord member, and 3X10 Trulox plates for 2x6 and larger chord members. Attach to each face @ 8' o.c. with (4) 0.120"x1.375" nails into cap bottom chord and (4) in base truss top chord. Trulox plates may be staggered 4' o.c. front to back faces.

APA Rated Gusset
8"x8"x7/16" (min) APA rated sheathing gussets (each face). Attach @ 8' o.c. with (8) 6d common (0.113"x2") nails per gusset, (4) in cap bottom chord and (4) in base truss top chord. Gussets may be staggered 4' o.c. front to back faces.

2x4 Vertical Scabs
2x4 SPF #2, full chord depth scabs (each face). Attach @ 8' o.c. with (6) 10d box nails (0.128"x3") per scab, (3) in cap bottom chord and (3) in base truss top chord. Scabs may be staggered 4' o.c. front to back faces.

28PB Wave Piggyback Plate
One 28PB wave piggyback plate to each face @ 8' o.c. Attach teeth to piggyback at time of fabrication. Attach to supporting truss with (4) 0.120"x1.375" nails per face per ply. Piggyback plates may be staggered 4' o.c. front to back faces.

ALPINE
AN ITW COMPANY
155 Harlem Ave
North Building, 4th Floor
Glenview, IL 60025

WARNING READ AND FOLLOW ALL NOTES ON THIS DRAWING!
IMPORTANT FURNISH THIS DRAWING TO ALL CONTRACTORS INCLUDING THE INSTALLER!

Trusses require extreme care in fabricating, handling, shipping, installing and bracing. Refer to and follow the latest edition of BCSI (Building Component Safety Information, by TPI and SBCA) for safety practices prior to performing these functions. Installers shall provide temporary bracing per BCSI. Unless noted otherwise, top chord shall have properly attached structural sheathing and bottom chord shall have a properly attached rigid ceiling. Locations shown for permanent lateral restraint of webs shall have bracing installed per BCSI sections B3, B7 or B10, as applicable. Apply plates to each face of truss and position as shown above and on the Joint Details, unless noted otherwise. Refer to drawings 160A-Z for standard plate positions.

Alpine, a division of ITW Building Components Group Inc. shall not be responsible for any deviation from this drawing, any failure to build the truss in conformance with ANSI/TPI 1, or for handling, shipping, installation & bracing of trusses.

A seal on this drawing or cover page listing this drawing, indicates acceptance of professional engineering responsibility solely for the design shown. The suitability and use of this drawing for any structure is the responsibility of the Building Designer per ANSI/TPI 1 Sec.2.

For more information see this job's general notes page and these web sites:

DOUGLAS FLEMING LICENSE No. 66648 STATE OF FLORIDA PROFESSIONAL ENGINEER
09/04/2024
COA #0 278

REF	PIGGYBACK
DATE	01/02/2018
DRWG	PB160160118

SPACING 24.0"

Piggyback Detail - ASCE 7-16: 180 mph, 30' Mean Hgt, Partially Enclosed, Exp. C, Kzt=1.00

180 mph Wind, 30.00 ft Mean Hgt, ASCE 7-16, Part. Enclosed Bldg. located anywhere in roof, Exp C, Wind DL= 5.0 psf (min), Kzt=1.0.
Or 160 mph wind, 30.00 ft Mean Hgt, ASCE 7-16, Part. Enclosed Bldg. located anywhere in roof, Exp D, wind DL= 5.0 psf (min), Kzt=1.0.

Note: Top chords of trusses supporting piggyback cap trusses must be adequately braced by sheathing or purlins. The building Engineer of Record shall provide diagonal bracing or any other suitable anchorage to permanently restrain purlins, and lateral bracing for out of plane loads over gable ends.

Maximum truss spacing is 24" o.c. detail is not applicable if cap supports additional loads such as cupola, steeple, chimney or drag strut loads.

** Refer to Engineer's sealed truss design drawing for piggyback and base truss specifications.

Piggyback cap truss slant nailed to all top chord purlin bracing with (2) 16d box nails (0.135"x3.5") and secure top chord with 2x4 #3 grade scab (1 side only at each end) attached with 2 rows of 10d box nails (0.128"x3") at 4' o.c.

++ Flat top chord purlins required at both ends and at a maximum of 24" intervals unless otherwise noted on base truss design drawing. Attach purlin bracing to the flat top chord using a minimum of (2) 16d box nails (0.135"x3.5").

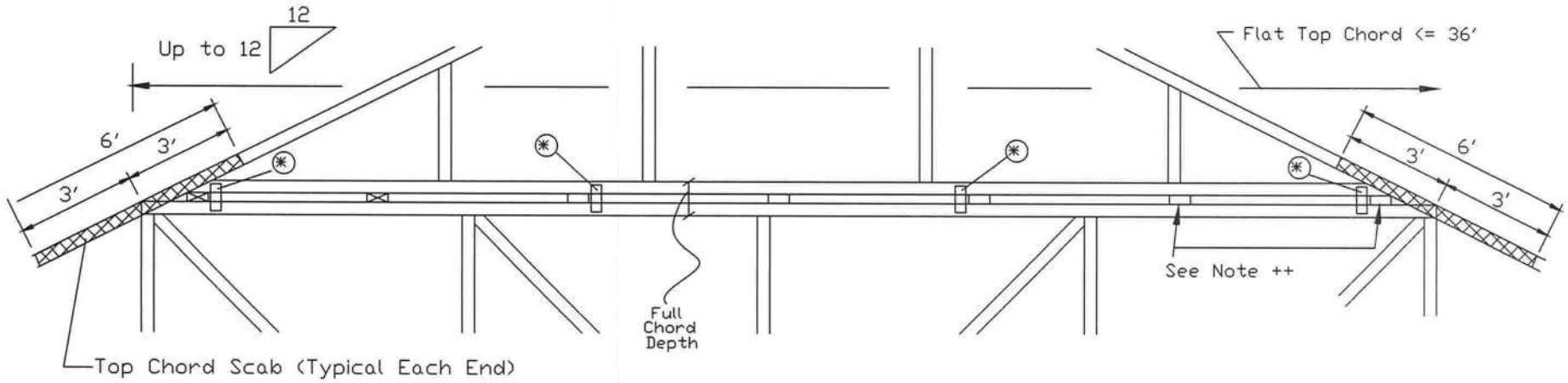

* In addition, provide connection with one of the following methods:	
Trulox Use 3X8 Trulox plates for 2x4 chord member, and 3X10 Trulox plates for 2x6 and larger chord members. Attach to each face @ 8' o.c. with (4) 0.120"x1.375" nails into cap bottom chord and (4) in base truss top chord. Trulox plates may be staggered 4' o.c. front to back faces.	28PB Wave Piggyback Plate One 28PB wave piggyback plate to each face @ 8' o.c. Attach teeth to piggyback at time of fabrication. Attach to supporting truss with (4) 0.120"x1.375" nails per face per ply. Piggyback plates may be staggered 4' o.c. front to back faces.
APA Rated Gusset 8"x8"x7/16" (min) APA rated sheathing gussets (each face). Attach @ 8' o.c. with (8) 6d common (0.113"x2") nails per gusset, (4) in cap bottom chord and (4) in base truss top chord. Gussets may be staggered 4' o.c. front to back faces.	2x4 Vertical Scabs 2x4 SPF #2, full chord depth scabs (each face). Attach @ 8' o.c. with (6) 10d box nails (0.128"x3") per scab, (3) in cap bottom chord and (3) in base truss top chord. Scabs may be staggered 4' o.c. front to back faces.

ALPINE
AN ITW COMPANY
155 Harlem Ave
North Building, 4th Floor
Glenview, IL 60025

WARNING READ AND FOLLOW ALL NOTES ON THIS DRAWING!
IMPORTANT FURNISH THIS DRAWING TO ALL CONTRACTORS INCLUDING THE INSTALLER!

Trusses require extreme care in fabricating, handling, shipping, installing and bracing. Refer to and follow the latest edition of BCSI (Building Component Safety Information, by TPI and SBCA) for safety practices prior to performing these functions. Installers shall provide temporary bracing per BCSI. Unless noted otherwise, top chord shall have properly attached structural sheathing and bottom chord shall have a properly attached rigid ceiling. Locations shown for permanent lateral restraint of webs shall have bracing installed per BCSI sections B3, B7 or B10, as applicable. Apply plates to both faces of truss and position as shown above and on the Joint Details, unless noted otherwise. Refer to drawings 160A-Z for standard plate positions.

Alpine, a division of ITW Building Components Group Inc. shall not be responsible for any deviation from this drawing, any failure to build the truss in conformance with ANSI/TPI 1, or for handling, shipping, installation & bracing of trusses.

A seal on this drawing or cover page listing this drawing, indicates acceptance of professional engineering responsibility solely for the design shown. The suitability and use of this drawing for any structure is the responsibility of the Building Designer per ANSI/TPI 1 Sec.2.

For more information see this job's general notes page and these web sites:

DOUGLAS FLEMING
LICENSE
No. 66648
STATE OF
FLORIDA
PROFESSIONAL ENGINEER
09/04/2024
COA #0 278

REF	PIGGYBACK
DATE	01/02/2018
DRWG	PB180160118
SPACING	24.0"

Cracked or Broken Member Repair Detail

This drawing specifies repairs for a truss with broken chord or web member.

This design is valid only for single ply trusses with 2x4 or 2x6 broken members. No more than one break per chord panel and no more than two breaks per truss are allowed. Contact the truss manufacturer for any repairs that do not comply with this detail.

(B) = Damaged area, 12" max length of damaged section

(L) = Minimum nailing distance on each side of damaged area (B)

(S) = Two 2x4 or two 2x6 side members, same size, grade, and species as damaged member. Apply one scab per face. Minimum side member length(s) = (2)(L) + (B)

Scab member length (S) must be within the broken panel.

Nail into 2x4 members using two (2) rows at 4" o.c., rows staggered.
Nail into 2x6 members using three (3) rows at 4" o.c., rows staggered.

Nail using 10d box or gun nails (0.128"x3", min) into each side member.

The maximum permitted lumber grade for use with this detail is limited to Visual grade #1 and MSR grade 1650f.

This repair detail may be used for broken connector plate at mid-panel splices.

This repair detail may not be used for damaged chord or web sections occurring within the connector plate area.

Broken chord may not support any tie-in loads.

Load Duration = 0%
Member forces may be increased for Duration of Load

Member	Size	L	Maximum Member Axial Force SPF-C	HF	DF-L	SYP
Web Only	2x4	12"	620#	635#	730#	800#
Web Only	2x4	18"	975#	1055#	1295#	1415#
Web or Chord	2x4	24"	975#	1055#	1495#	1745#
Web or Chord	2x6		1465#	1585#	2245#	2620#
Web or Chord	2x4	30"	1910#	1960#	2315#	2555#
Web or Chord	2x6		2230#	2365#	3125#	3575#
Web or Chord	2x4	36"	2470#	2530#	2930#	3210#
Web or Chord	2x6		3535#	3635#	4295#	4745#
Web or Chord	2x4	42"	2975#	3045#	3505#	3835#
Web or Chord	2x6		4395#	4500#	5225#	5725#
Web or Chord	2x4	48"	3460#	3540#	4070#	4445#
Web or Chord	2x6		5165#	5280#	6095#	6660#

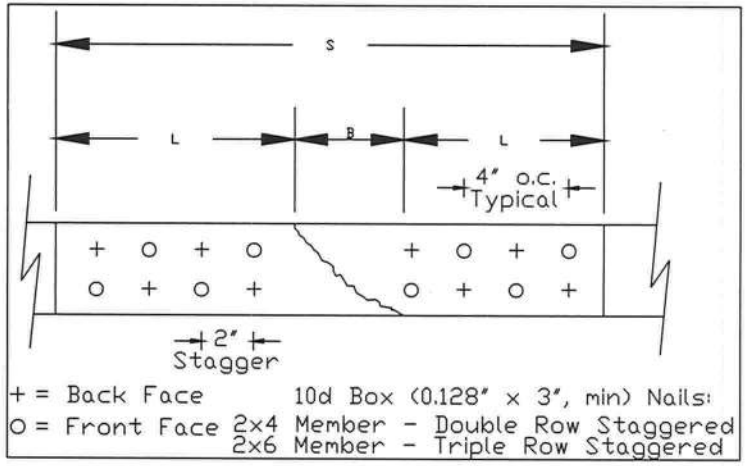

Nail Spacing Detail

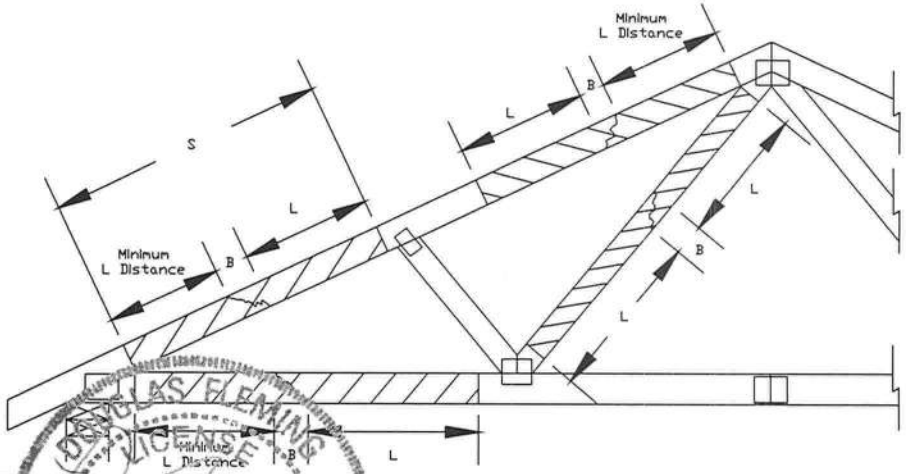

WARNING READ AND FOLLOW ALL NOTES ON THIS DRAWING!
IMPORTANT FURNISH THIS DRAWING TO ALL CONTRACTORS INCLUDING THE INSTALLERS.

Trusses require extreme care in fabricating, handling, shipping, installing and bracing. Refer to and follow the latest edition of BCSI (Building Component Safety Information, by TPI and SBCA) for safety practices prior to performing these functions. Installers shall provide temporary bracing per BCSI. Unless noted otherwise, top chord shall have properly attached structural sheathing and bottom chord shall have a properly attached rigid ceiling. Locations shown for permanent lateral restraint of webs shall have bracing installed per BCSI sections B3, B7 or B10, as applicable. Apply plates to each face of truss and position as shown above and on the Joint Details, unless noted otherwise. Refer to drawings 160A-Z for standard plate positions.

Alpine, a division of ITW Building Components Group Inc. shall not be responsible for any deviation from this drawing, any failure to build the truss in conformance with ANSI/TPI 1, or for handling, shipping, installation & bracing of trusses.

A seal on this drawing or cover page listing this drawing, indicates acceptance of professional engineering responsibility solely for the design shown. The suitability and use of this drawing for any structure is the responsibility of the Building Designer per ANSI/TPI 1 Sec.2.

For more information see this job's general notes page and these web sites:

ALPINE
AN ITW COMPANY
155 Harlem Ave
North Building, 4th Floor
Glenview, IL 60025

DOUGLAS FLEMING
LICENSED
No. 66648
STATE OF FLORIDA
PROFESSIONAL ENGINEER
09/04/2024
COA #0 278

SPACING 24.0" MAX

REF	MEMBER REPAIR
DATE	10/01/14
DRWG	REPCHRD1014

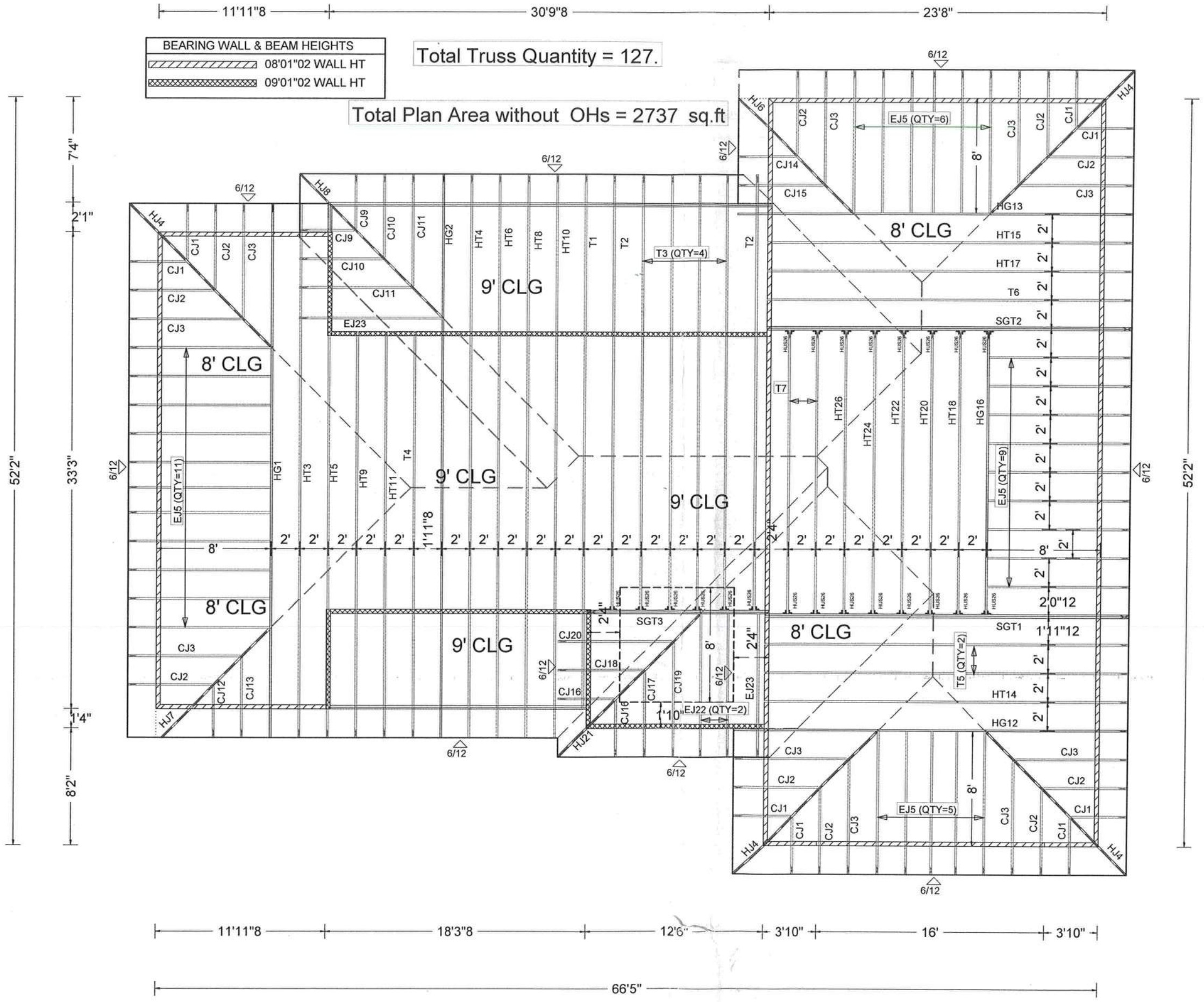

Job Name: Perri Residence
Customer: Erkinger Home Builders
Designer: Rodney Barone
PlanName: Matthew Erkinger
Created : 09-06-2024
SemRef# : B59525R

JOB NO:
B59525R
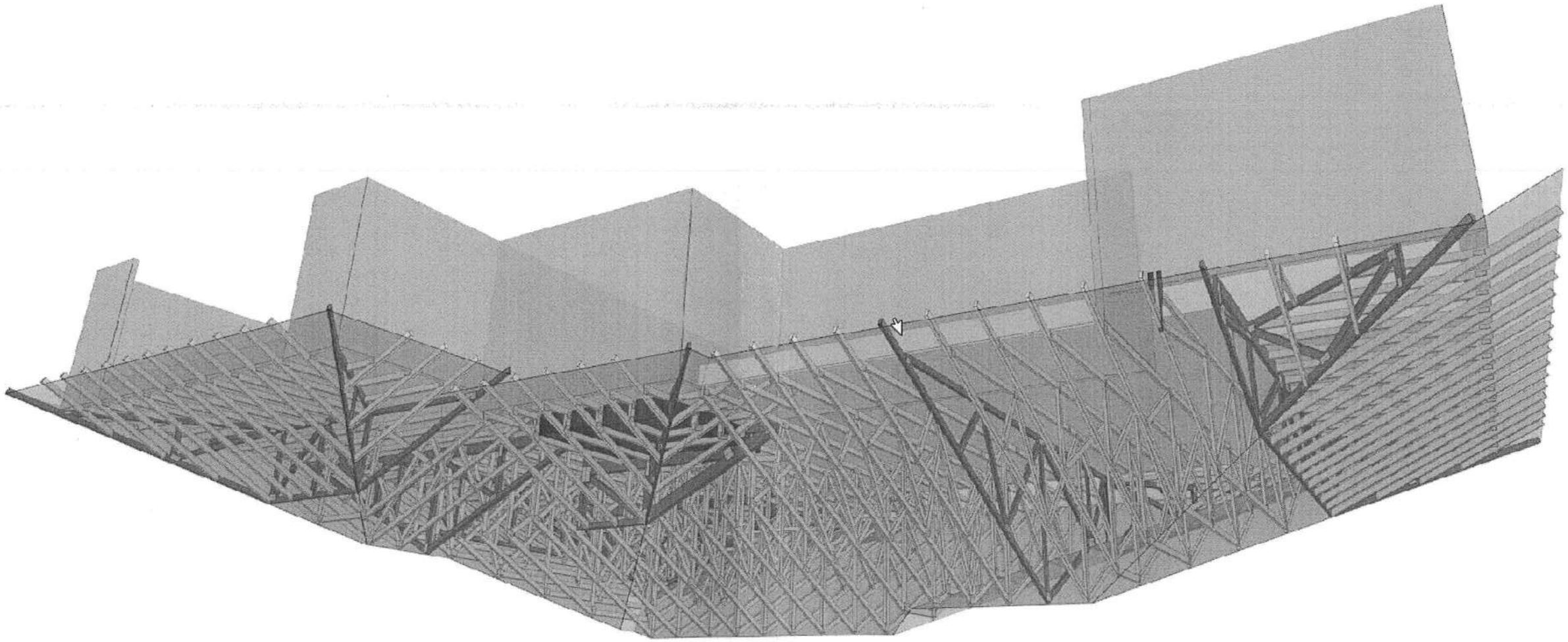
PAGE NO:
1 OF 1