DATE 09/17/2007

Columbia County Building Permit

This Permit Expires One Year From the Date of Issue

PERMIT
000026238

APPLICANT J.L. DUPREE,SR. PHONE 386.754.5678

ADDRESS POB 2861 LAKE CITY FL 32056

OWNER CELEBRATION COMMUNTY CHURCH PHONE 386.754.1144

ADDRESS 174 SW MORNIG STAR GLN FT. WHITE FL 32038

CONTRACTOR J.L. DUPREE,JR. PHONE 386.754.5678

LOCATION OF PROPERTY 47-S THRU COL. CITY PAST WATSON ON THE L, & THE CHURCH IS APPROX. 1 MILE ON THE L @ MORNING STAR GLN.

TYPE DEVELOPMENT CHURCH ADD. ESTIMATED COST OF CONSTRUCTION 150000.00

HEATED FLOOR AREA _____ TOTAL AREA _____ HEIGHT 22.00 STORIES 1

FOUNDATION CONC WALLS FRAMED ROOF PITCH 6'12 FLOOR CONC

LAND USE & ZONING A-3 MAX. HEIGHT 35

Minimum Set Back Requirments: STREET-FRONT 30.00 REAR 25.00 SIDE 25.00

NO. EX.D.U. 1 FLOOD ZONE X DEVELOPMENT PERMIT NO. _____

PARCEL ID 34-5S-16-03758-121 SUBDIVISION SHANNA MEADOWS

LOT 21,22 BLOCK _____ PHASE _____ UNIT _____ TOTAL ACRES 10.00

Culvert Permit No.	Culvert Waiver	Contractor's License Number	Applicant/Owner/Contractor
		CGC060631	Lamar Duffee

Driveway Connection	Septic Tank Number	LU & Zoning checked by	Approved for Issuance	New Resident
EXISTING	07-0608-M	BLK	JTH	N

COMMENTS: FLOOR ELEVATION TO BE @ 83.75 PER ENGINEER.ELEVATION CONFIRMATION LETTER REQUIRED.

Check # or Cash 3493

FOR BUILDING & ZONING DEPARTMENT ONLY

Temporary Power _____ date/app. by

Foundation _____ date/app. by

Monolithic _____ (footer/Slab) date/app. by

Under slab rough-in plumbing _____ date/app. by

Slab _____ date/app. by

Sheathing/Nailing _____ date/app. by

Framing _____ date/app. by

Rough-in plumbing above slab and below wood floor _____ date/app. by

DATE 02/03/2014

Columbia County Building Permit

This Permit Must Be Prominently Posted on Premises During Construction

PERMIT
000031725

APPLICANT RICHARD REICHERT PHONE 697-4399

ADDRESS 385 SW MONTGOMERY DR LAKE CITY FL 32025

OWNER CELEBRATION CMTY CHURCH OF SOTHRN COL CO PHONE 754-1144

ADDRESS 174 SW MORNING STAR GLEN FORT WHITE FL 32038

CONTRACTOR CELEBRATION COMMUNITY CHURCH PHONE 754-1144

LOCATION OF PROPERTY 47 SOUTH, L MORNING STAR GLEN, 1ST ON RIGHT

TYPE DEVELOPMENT INTERIOR COMPLETION ESTIMATED COST OF CONSTRUCTION 25000.00

HEATED FLOOR AREA _____ TOTAL AREA _____ HEIGHT ____ STORIES ____

FOUNDATION _____ WALLS _____ ROOF PITCH _____ FLOOR _____

LAND USE & ZONING AG-3 MAX. HEIGHT 35

Minimum Set Back Requirments: STREET-FRONT 30.00 REAR 25.00 SIDE 25.00

NO. EX.D.U. 1 FLOOD ZONE NA DEVELOPMENT PERMIT NO. _____

PARCEL ID 34-5S-16-03758-121 SUBDIVISION SHANNA MEADOWS S/D

LOT 21 22 BLOCK ____ PHASE ____ UNIT ____ TOTAL ACRES 10.00

Culvert Permit No.	Culvert Waiver	Contractor's License Number	Applicant/Owner/Contractor	
		OWNER		
EXISTING	07-0608-M	LH	RJ	N
Driveway Connection	Septic Tank Number	LU & Zoning checked by	Approved for Issuance	New Resident

COMMENTS: COMPLETION ON CHURCH ADDITION-INTERIOR ONLY

OWNER BUILDER DISCLOSURE STATEMENT REC'D. NOC ON FILE

COMPLETION OF EXPIRED PERMIT 28379 Check # or Cash 7970

FOR BUILDING & ZONING DEPARTMENT ONLY

Temporary Power _____ date/app. by

Foundation _____ date/app. by

Monolithic _____ (footer/Slab) date/app. by

Under slab rough-in plumbing _____ date/app. by

Slab _____ date/app. by

Sheathing/Nailing _____ date/app. by

Framing _____ date/app. by

Insulation _____ date/app. by

Rough-in plumbing above slab and below wood floor _____

Electrical rough-in _____

ENERGY EFFICIENCY CODE FOR BUILDING CONSTRUCTION

Florida Department of Community Affairs

EnergyGauge FlaCom v1.22 FORM 400A-2001

Whole Building Performance Method for Commercial Buildings

Jurisdiction: COLUMBIA COUNTY, COLUMBIA COUNTY, FL (221000)

Short Desc: New Prj
Owner: Celebration Community Church
Address:
Morning Star Glenn
City: Fort White
State: FL
Zip: 32038

Project: Celebration Community Church
Fellowship Hall

PermitNo: 0
Storeys: 1

Type: Assembly
Class: New Finished building

GrossArea: 2952
Net Area: 2952

Max Tonnage: 5 (if different, write in)

26238

Compliance Summary

Component	Design	Criteria	Result
Gross Energy Use	71.16	100.00	**PASSES**
Other Envelope Requirements - A			**PASSES**
LIGHTING CONTROLS			**PASSES**
EXTERNAL LIGHTING			**PASSES**
HVAC SYSTEM			**PASSES**
PLANT			**PASSES**
WATER HEATING SYSTEMS			**PASSES**
PIPING SYSTEMS			**PASSES**
Met all required compliance from Check List?			**Yes/No/NA**

IMPORTANT NOTE: An input report Print-Out from EnergyGauge FlaCom of this design building must be submitted along with this Compliance Report.

COMPLIANCE CERTIFICATION:

I hereby certify that the plans and specifications covered by this calculation are in compliance with the Florida Energy Efficiency Code. **PREPARED BY:** William H. Freeman **DATE:** 8/16/07 I hereby certify that this building is in compliance with the Florida Energy Efficiency Code. **OWNER AGENT:** Celebration Community Ch **DATE:**	Review of the plans and specifications covered by this calculation indicates compliance with the Florida Energy Code. Before construction is completed, this building will be inspected for compliance in accordance with Section 553.908, F.S. **BUILDING OFFICIAL:** **DATE:**

If required by Florida law, I hereby certify (*) that the system design is in compliance with the Florida Energy Code.

		REGISTRATION No.
ARCHITECT :	William H. Freeman	PE #56001
ELECTRICAL SYSTEM DESIGNER	William H. Freeman	PE #56001
LIGHTING SYSTEM DESIGNER:	William H. Freeman	PE #56001
MECHANICAL SYSTEM DESIGNER:	William H. Freeman	PE #56001
PLUMBING SYSTEM DESIGNER:	William H. Freeman	

(*) Signature is required where Florida Law requires design to be performed by registered design professionals. Typed names and registration numbers may be used where all relevant information is contained on signed/sealed plans.

Project: New Prj
Title: Celebration Community Church Fellowship Hall
Type: Assembly
Location: COLUMBIA COUNTY, COLUMBIA COUNTY, FL (221000)
(WEA F

Whole Building Compliance

	Design	Reference
Total	*71.16*	*100.00*
ELECTRICITY	71.16	100.00
AREA LIGHTS	15.33	36.57
MISC EQUIPMT	2.12	2.12
PUMPS & MISC	0.07	0.07
SPACE COOL	21.87	29.47
VENT FANS	31.76	31.76

Credits & Penalties (if any): Modified Points: = 71.16 **PASSES**

Project: New Prj
Title: Celebration Community Church Fellowship Hall
Type: Assembly
Location: COLUMBIA COUNTY, COLUMBIA COUNTY, FL (221000)
(WEA F

Other Envelope Requirements

Item	Zone	Description	Design	Limit	Meet Req.
Pr0Zo1Rf1	Pr0Zo1	Exterior Roof - Max Uo Limit	0.03	0.09	Yes

Meets Other Envelope Requirements

Project: New Prj
Title: Celebration Community Church Fellowship Hall
Type: Assembly
Location: COLUMBIA COUNTY, COLUMBIA COUNTY, FL (221000)
(WEA F

External Lighting Compliance

Description	Category	Allowance (W/Unit)	Area or Length or No. of Units (Sqft or ft)	ELPA (W)	CLP (W)
Ext Light 1	Entrance (without Canopy)	30.00	100.0	3.000	500
Ext Light 2	Entrance (without Canopy)	30.00	500.0	15.000	250

Design: 750 (W)
Allowance: 18000 (W)

PASSES

Project: New Prj
Title: Celebration Community Church Fellowship Hall
Type: Assembly
Location: COLUMBIA COUNTY, COLUMBIA COUNTY, FL (221000)
(WEA F

Lighting Controls Compliance

Acronym	Ashrae ID	Description	Area (sq.ft)	No. of Tasks	Design CP	Min CP	Compli-ance
Pr0Zo1Sp1	133	Banquet/Multi purpose (Multiple Functions) Alt 78	126	1	32	32	PASSES
Pr0Zo1Sp2	26	Offices (Partitions>4.5 ft below ceiling) Enclosed offices, all open plan offices without partitions	105	1	4	4	PASSES
Pr0Zo1Sp3	3	Classroom/Lecture Hall	120	1	8	8	PASSES
Pr0Zo1Sp4	13	Toilet and Washroom	90	1	4	4	PASSES
Pr0Zo1Sp5	4	Electrical Mechanical Equipment Room - General	66	1	2	2	PASSES

PASSES

Project: New Prj
Title: Celebration Community Church Fellowship Hall
Type: Assembly
Location: COLUMBIA COUNTY, COLUMBIA COUNTY, FL (221000)
(WEA F

System Report Compliance

Pr0Sy1	System 1	Constant Volume Air Cooled Split System < 65000 Btu/hr	No. of Units 2

Component	Category	Capacity	Design Eff	Eff Criteria	Design IPLV	IPLV Criteria	Comp-liance
Cooling System	Air Cooled < 65000 Btu/h Cooling Capacity		10.00	10.00	8.00		PASSES
Air Handling System -Supply	Air Handler (Supply) - Constant Volume		0.80	0.80			PASSES

PASSES

Plant Compliance

Description	Installed No	Size	Design Eff	Min Eff	Design IPLV	Min IPLV	Category	Comp liance

None

Project: New Prj
Title: Celebration Community Church Fellowship Hall
Type: Assembly
Location: COLUMBIA COUNTY, COLUMBIA COUNTY, FL (221000)
(WEA F

Water Heater Compliance

Description	Type	Category	Design Eff	Min Eff	Design Loss	Max Loss	Comp liance
Water Heater 1	Storage Water Heater - Electric	<=120 [gal] & <= 12 [kW]	0.90	0.87			PASSES

PASSES

Piping System Compliance

Category	Pipe Dia [inches]	Is Runout?	Operating Temp [F]	Ins Cond [Btu-in/hr .SF.F]	Ins Thick [in]	Req Ins Thick [in]	Compliance

None

Project: New Prj
Title: Celebration Community Church Fellowship Hall
Type: Assembly
Location: COL

Other Required Compliance

Category	Section	Requirement (write N/A in box if not applicable)	Check
Infiltration	406.1	Infiltration Criteria have been met	☐
System	407.1	HVAC Load sizing has been performed	☐
Ventilation	409.1	Ventilation criteria have been met	☐
ADS	410.1	Duct sizing and Design have been performed	☐
T & B	410.1	Testing and Balancing will be performed	☐
Electrical	413.1	Metering criteria have been met	☐
Motors	414.1	Motor efficiency criteria have been met	☐
Lighting	415.1	Lighting criteria have been met	☐
O & M	102.1	Operation/maintenance manual will be provided to owner	☐
Roof/Ceil	404.1	R-19 for Roof Deck with supply plenums beneath it	☐
Report	101	Input Report Print-Out from EnergyGauge FlaCom attached?	☐

ENERGY EFFICIENCY CODE FOR BUILDING CONSTRUCTION

Florida Department of Community Affairs

EnergyGauge FlaCom v1.22

INPUT DATA REPORT

Project Information

Project Name: New Prj

Project Title: Celebration Community Church Fellowship Hall

Address: Morning Star Glenn

State: FL

Zip: 32038

Owner: Celebration Community Church

Orientation: North

Building Type: Assembly

Building Classification: New Finished building

No.of Storeys: 1

GrossArea: 2952

Zones

No	Acronym	Description	Type	Load Profile	Area [sf]	Multiplier	Total Area [sf]	
1	Pr0Zo1	Fellowship Hall	CONDITIONED	Uses Building Load Profile	2952.0	1	2952.0	☐

Spaces

No	Acronym	Description	Type	Depth [ft]	Width [ft]	Height [ft]	Multi plier	Total Area [sf]	Total Volume [cf]	
In Zone: Pr0Zo1										
1	Pr0Zo1Sp1	Hall	Banquet/Multi purpose (Multiple Functions) Alt 78	14.00	9.00	9.00	16	2016.0	18144.0	☐
2	Pr0Zo1Sp2	Office	Offices (Partitions>4.5 ft below ceiling) Enclosed offices, all open plan offices without partitions	15.00	7.00	9.00	2	210.0	1890.0	☐
3	Pr0Zo1Sp3	Classroom	Classroom/Lecture Hall	15.00	8.00	9.00	4	480.0	4320.0	☐
4	Pr0Zo1Sp4	Restroom	Toilet and Washroom	9.00	10.00	9.00	2	180.0	1620.0	☐
5	Pr0Zo1Sp5	Mechanical Closet	Electrical Mechanical Equipment Room - General	6.00	11.00	9.00	1	66.0	594.0	☐

Lighting

No	Type	Power [W]	Control Type	No.of Ctrl pts	
In Zone: Pr0Zo1					
In Space: Pr0Zo1Sp1					
1	Compact Fluorescent	160.00	Manual On/Off	2	☐
In Space: Pr0Zo1Sp2					
1	Compact Fluorescent	160.00	Manual On/Off	2	☐
In Space: Pr0Zo1Sp3					
1	Compact Fluorescent	160.00	Manual On/Off	2	☐
In Space: Pr0Zo1Sp4					
1	Incandescent	60.00	Manual On/Off	2	☐
In Space: Pr0Zo1Sp5					
1	Incandescent	40.00	Manual On/Off	2	☐

Walls

No	Description	Type	Width [ft]	H (Effec) [ft]	Multi plier	Area [sf]	Direction	Conductance [Btu/hr. sf. F]	Heat Capacity [Btu/sf.F]	Dens. [lb/cf]	R-Value [h.sf.F/Btu]	
In Zone: Pr0Zo1												
1	North Wall	5/8" stucco /8"CMU/3/4"ISO BTWN24"oc/.5" Gyp	58.00	9.00	1	522.0	North	0.2067	5.7314	34.65	4.84	☐
2	West Wall	0.75 in. stucco, 2x4x16" oc, R11Batt, 0.5 in. gyp	52.67	9.00	1	474.0	West	0.1118	1.1829	14.94	8.94	☐
3	East Wall	0.75 in. stucco, 2x4x16" oc, R11Batt, 0.5 in. gyp	52.67	9.00	3	474.0	East	0.1118	1.1829	14.94	8.94	☐
4	South Wall	0.75 in. stucco, 2x4x16" oc, R11Batt, 0.5 in. gyp	58.00	9.00	1	522.0	South	0.1118	1.1829	14.94	8.94	☐

Windows

No	Description	Type	Shaded	UCen [Btu/hr sf F]	SC	Vis.Tr	W [ft]	H (Effec) [ft]	Multi plier	Total Area [sf]	
In Zone: Pr0Zo1											
In Wall: Pr0Zo1Wa2											
1	Pr0Zo1Wa2Wi1	DOUBLE CLEAR IG	No	0.6514	0.88	0.81	3.00	6.00	3	54.0	☐
In Wall: Pr0Zo1Wa3											
1	Pr0Zo1Wa3Wi1	DOUBLE CLEAR IG	No	0.6514	0.88	0.81	3.00	6.00	3	54.0	☐

Doors

No	Description	Type	Shaded?	Width [ft]	H (Effec) [ft]	Multi plier	Area [sf]	Cond. [Btu/hr. sf. F]	Dens. [lb/cf]	Heat Cap. [Btu/sf. F]	R-Value [h.sf.F/Btu]
In Zone: Pr0Zo1											

In Wall:	**Pr0Zo1Wa1**											
1	Double Door	Aluminum door, 1.25 in. polystyrene	No	6.00	7.00	1	42.0	0.1919	43.67	0.53	5.21	☐
2	Pr0Zo1Wa1Dr2	Aluminum door, 1.25 in. polystyrene	No	3.00	7.00	1	21.0	0.1919	43.67	0.53	5.21	☐
In Wall:	**Pr0Zo1Wa2**											
1	Pr0Zo1Wa2Dr1	Aluminum door, 1.25 in. polystyrene	No	3.00	7.00	1	21.0	0.1919	43.67	0.53	5.21	☐
In Wall:	**Pr0Zo1Wa4**											
1	Pr0Zo1Wa4Dr1	Aluminum door, 1.25 in. polystyrene	No	3.00	7.00	1	21.0	0.1919	43.67	0.53	5.21	☐

Roofs

No	Description	Type	Width [ft]	H (Effec) [ft]	Multi plier	Area [sf]	Tilt [deg]	Cond. [Btu/hr. Sf. F]	Heat Cap [Btu/sf. F]	Dens. [lb/cf]	R-Value [h.sf.F/Btu]	
In Zone:	**Pr0Zo1**											
1	Pr0Zo1Rf1	Shngl/1/2"WD Deck/WD Truss/9" Batt/Gyp Brd	58.00	52.67	1	3054.9	0.00	0.0320	1.50	8.22	31.24	☐

Skylights

No	Description	Type	UCen [Btu/hr sf F]	Shading Coeff	Vis.Trans	W [ft]	H (Effec) [ft]	Multiplier	Area [Sf]	Total Area [Sf]	
In Zone:											
In Roof:											☐

Floors

No	Description	Type	Width [ft]	H (Effec) [ft]	Multi plier	Area [sf]	Cond. [Btu/hr. sf. F]	Heat Cap. [Btu/sf. F]	Dens. [lb/cf]	R-Value [h.sf.F/Btu]
In Zone: Pr0Zo1										
1	Pr0Zo1Fl1	Concrete floor, carpet and rubber pad	58.00	52.67	1	3054.9	0.5987	9.33	140.00	1.67

Systems

Pr0Sy1 **System 1** **Constant Volume Air Cooled Split System < 65000 Btu/hr** **No. Of Units 2**

Component	Category	Capacity	Efficiency	IPLV
1	Cooling System (Air Cooled < 65000 Btu/h Cooling Capacity)	60000.00	10.00	8.00
2	Air Handling System -Supply (Air Handler (Supply) - Constant Volume)	2000.00	0.80	

Plant

Equipment	Category	Size	Inst.No	Eff.	IPLV

Water Heaters

	W-Heater Description	Capacit	Cap.Unit	I/P Rt.	Efficienc		Loss
1	Storage Water Heater - Electric	50	Gal	[kW]	0.9000	[EF]	[%/hr]

Ext-Lighting

	Description	Categories.	Area/Len/No. of units [sf/ft/No]	Wattage [W]
1	Ext Light 1	Entrance (without Canopy)	100.00	500.00
2	Ext Light 2	Entrance (without Canopy)	500.00	250.00

Piping

No	Type	Operating Temperature [F]	Insulation Conductivity [Btu-in/h.sf.F]	Nomonal pipe Diameter [in]	Insulation Thickness [in]	Is Runout?

Fenestration Used

Name	Glass Type	No. of Panes	Glass Conductance [Btu/h.sf.F]	SC	VLT	Frame Conductance [Btu/h.sf.F]	Frame Absorptance
ApLbWnd6	DOUBLE CLEAR IG	2	0.6514	0.8800	0.8120	0.4340	0.7000

Materials Used

Mat No	Acronym	Description	Only R-Value Used	RValue [h.sf.F/Btu]	Thickness [ft]	Conductivity [Btu/h.ft.F]	Density [lb/cf]	SpecificHeat [Btu/lb.F]
18	Matl18	2 in. Wood	No	2.3857	0.1670	0.0700	37.00	0.3900
264	Matl264	ALUMINUM, 1/16 IN	No	0.0002	0.0050	26.0000	480.00	0.1000
214	Matl214	POLYSTYRENE, EXP., 1-1/4IN,	No	5.2100	0.1042	0.0200	1.80	0.2900

187	Matl187	GYP OR PLAS BOARD,1/2IN	No	0.4533	0.0417	0.0920	50.00	0.2000	☐
206	Matl206	CELLULOSE,FILL,5.5IN,R-20	No	20.8318	0.4583	0.0220	3.00	0.3300	☐
151	Matl151	CONC HW, DRD, 140LB, 4IN	No	0.4403	0.3333	0.7570	140.00	0.2000	☐
178	Matl178	CARPET W/RUBBER PAD	Yes	1.2300					☐
265	Matl265	Soil, 1 ft	No	2.0000	1.0000	0.5000	100.00	0.2000	☐
48	Matl48	6 in. Heavyweight concrete	No	0.5000	0.5000	1.0000	140.00	0.2000	☐
123	Matl123	CONC BLOCK MW,8IN,HOLLOW	No	1.7227	0.6667	0.3870	53.00	0.2000	☐
159	Matl159	CONC HW-UNDRD-140LB-4IN	No	0.3202	0.3333	1.0410	140.00	0.2000	☐
57	Matl57	3/4 in. Plaster or gypsum	No	0.1488	0.0625	0.4200	100.00	0.2000	☐
72	Matl72	AIR LAYER, 3/4IN OR LESS, VERT. WALLS	Yes	0.9000					☐
267	Matl267	0.75" stucco	No	0.1563	0.0625	0.4000	16.00	0.2000	☐
266	Matl266	2x4@16" oc + R11 Batt	No	8.3343	0.2917	0.0350	9.70	0.2000	☐
215	Matl215	POLYSTYRENE, EXP., 2IN,	No	8.3350	0.1667	0.0200	1.80	0.2900	☐
105	Matl105	CONC BLK HW, 8IN, HOLLOW	No	1.1002	0.6667	0.6060	69.00	0.2000	☐
256	Matl256	WOOD, SOFT, 1-1/2IN	No	1.8939	0.1250	0.0660	32.00	0.3300	☐
268	Matl268	0.625" stucco	No	0.1302	0.0521	0.4000	16.00	0.2000	☐
42	Matl42	8 in. Lightweight concrete block	No	2.0212	0.6670	0.3300	38.00	0.2000	☐
269	Matl269	.75" ISO BTWN24" oc	No	2.2321	0.0625	0.0280	4.19	0.3000	☐
86	Matl86	BRICK, COMMON, 4IN	No	0.8012	0.3333	0.4160	120.00	0.2000	☐
211	Matl211	POLYSTYRENE,EXP.,1/2IN,	No	2.0850	0.0417	0.0200	1.80	0.2900	☐
12	Matl12	3 in. Insulation	No	10.0000	0.2500	0.0250	2.00	0.2000	☐
218	Matl218	POLYURETHANE,EXP.,1/2IN,	No	3.2077	0.0417	0.0130	1.50	0.3800	☐
23	Matl23	6 in. Insulation	No	20.0000	0.5000	0.0250	5.70	0.2000	☐
4	Matl4	Steel siding	No	0.0002	0.0050	26.0000	480.00	0.1000	☐
271	Matl271	2x4@24" oc + R11 Batt	No	10.4179	0.2917	0.0280	7.11	0.2000	☐
272	Matl272	Panel with 7/16" panels	Yes	0.9044					☐
273	Matl273	Hollow core flush (1.375")	Yes	1.2777					☐
274	Matl274	Solid core flush (1.375")	Yes	1.7141					☐

275	Matl275	Panel with 7/16" panels (1.375")	Yes	1.0019					☐
276	Matl276	Hollow core flush (1.75")	Yes	1.3239					☐
277	Matl277	Panel with 1-1/8" panels (1.75")	Yes	1.7141					☐
278	Matl278	Solid core flush (1.75")	Yes	1.6500					☐
279	Matl279	Solid core flush (2.25")	Yes	2.8537					☐
280	Matl280	Fiberglass/Mineral wool core	Yes	0.8167					☐
281	Matl281	Paper Honeycomb core	Yes	0.9357					☐
282	Matl282	Solid Urethane foam core	Yes	1.6500					☐
283	Matl283	Solid mineral fiberboard core	Yes	1.7816					☐
284	Matl284	Polystyrene core (18 ga steel) 1	Yes	2.0071					☐
285	Matl285	Polyurethane core (18 ga steel) 2	Yes	2.5983					☐
286	Matl286	Polyurethane core (24 ga steel) 1	Yes	2.5983					☐
287	Matl287	Polyurethane core (24 ga steel) 2	Yes	4.1500					☐
288	Matl288	Solid Urethane foam core	Yes	4.1500					☐
81	Matl81	ASPHALT-ROOFING, ROLL	Yes	0.1500					☐
244	Matl244	PLYWOOD, 1/2IN	No	0.6318	0.0417	0.0660	34.00	0.2900	☐
185	Matl185	CLAY TILE, PAVER, 3/8IN	No	0.0301	0.0313	1.0410	120.00	0.2000	☐
82	Matl82	ASPHALT-SHINGLE AND SIDING	Yes	0.4400					☐
11	Matl11	2 in. Insulation	No	6.6800	0.1670	0.0250	2.00	0.2000	☐
47	Matl47	2 in. Heavyweight concrete	No	0.1670	0.1670	1.0000	140.00	0.2000	☐
95	Matl95	CONC BLOCK HW-4IN-HOLLOW	No	0.7107	0.3333	0.4690	101.00	0.2000	☐
248	Matl248	ROOF GRAVEL OR SLAG1/2IN	No	0.0500	0.0417	0.8340	55.00	0.4000	☐
94	Matl94	BUILT-UP ROOFING, 3/8IN	No	0.3366	0.0313	0.0930	70.00	0.3500	☐

Constructs Used

No	Name	Simple Construct	Massless Construct	Conductance [Btu/h.sf.F]	Heat Capacity [Btu/sf.F]	Density [lb/cf]	RValue [h.sf.F/Btu]
1002	Aluminum door, 1.25 in. polystyrene	No	No	0.19	0.53	43.67	5.2104

Layer	Material No.	Material	Thickness [ft]	Framing Factor
1	264	ALUMINUM, 1/16 IN	0.0050	0.00
2	214	POLYSTYRENE, EXP., 1-1/4IN,	0.1042	0.00
3	264	ALUMINUM, 1/16 IN	0.0050	0.00

No	Name	Simple Construct	Massless Construct	Conductance [Btu/h.sf.F]	Heat Capacity [Btu/sf.F]	Density [lb/cf]	RValue [h.sf.F/Btu]
1004	Concrete floor, carpet and rubber pad	No	No	0.60	9.33	140.00	1.6703

Layer	Material No.	Material	Thickness [ft]	Framing Factor
1	151	CONC HW, DRD, 140LB, 4IN	0.3333	0.00
2	178	CARPET W/RUBBER PAD		0.00

No	Name	Simple Construct	Massless Construct	Conductance [Btu/h.sf.F]	Heat Capacity [Btu/sf.F]	Density [lb/cf]	RValue [h.sf.F/Btu]
1009	0.75 in. stucco, 2x4x16" oc, R11Batt, 0.5 in. gyp	No	No	0.11	1.18	14.94	8.9438

Layer	Material No.	Material	Thickness [ft]	Framing Factor
1	267	0.75" stucco	0.0625	0.00
2	266	2x4@16" oc + R11 Batt	0.2917	0.00
3	187	GYP OR PLAS BOARD,1/2IN	0.0417	0.00

No	Name	Simple Construct	Massless Construct	Conductance [Btu/h.sf.F]	Heat Capacity [Btu/sf.F]	Density [lb/cf]	RValue [h.sf.F/Btu]
1011	5/8" stucco /8"CMU/3/4"ISO BTWN24"oc/.5" Gyp	No	No	0.21	5.73	34.65	4.8368

Layer	Material No.	Material	Thickness [ft]	Framing Factor
1	268	0.625" stucco	0.0521	0.00
2	42	8 in. Lightweight concrete block	0.6670	0.00
3	269	.75" ISO BTWN24" oc	0.0625	0.00
4	187	GYP OR PLAS BOARD,1/2IN	0.0417	0.00

No	Name	Simple Construct	Massless Construct	Conductance [Btu/h.sf.F]	Heat Capacity [Btu/sf.F]	Density [lb/cf]	RValue [h.sf.F/Btu]
1038	Shngl/1/2"WD Deck/WD Truss/9" Batt/Gyp Brd	No	No	0.03	1.50	8.22	31.2351

Layer	Material No.	Material	Thickness [ft]	Framing Factor
1	81	ASPHALT-ROOFING, ROLL		0.00
2	244	PLYWOOD, 1/2IN	0.0417	0.00
3	12	3 in. Insulation	0.2500	0.00
4	23	6 in. Insulation	0.5000	0.00
5	187	GYP OR PLAS BOARD,1/2IN	0.0417	0.00

Notice of Treatment

ADD TO 10201

Applicator: Florida Pest Control & Chemical Co. (www.flapest .com)
Address: 536 SE Baya Ave
City Lake City Phone 752-1703

Site Location: Subdivision Celebration Comm Church (J.L Dupree)
Lot # Block# Permit # 26238
Address 174 SW Morning Star Gln Ft. White

Product used	Active Ingredient	% Concentration
☒ Premise	Imidacloprid	0.1%
☐ Termidor	Fipronil	0.12%
☐ Bora-Care	Disodium Octaborate Tetrahydrate	23.0%

Type treatment: ☒ Soil ☐ Wood

Area Treated	Square feet	Linear feet	Gallons Applied
Addition/church	3074	222	215 gals

As per Florida Building Code 104.2.6 – If soil chemical barrier method for termite prevention is used, final exterior treatment shall be completed prior to final building approval.

If this notice is for the final exterior treatment, initial this line _____.

10-4-07	1:40	F299
Date	Time	Print Technician's Name

Remarks: _____

Applicator - White Permit File - Canary Permit Holder - Pink

10/05 ©

Application for Onsite Sewage Disposal System Construction Permit. Part II Site Plan

Permit Application Number: 07-0608M

ALL CHANGES MUST BE APPROVED BY THE COUNTY HEALTH UNIT

CELEBRATION CHURCH/CR 02-9321

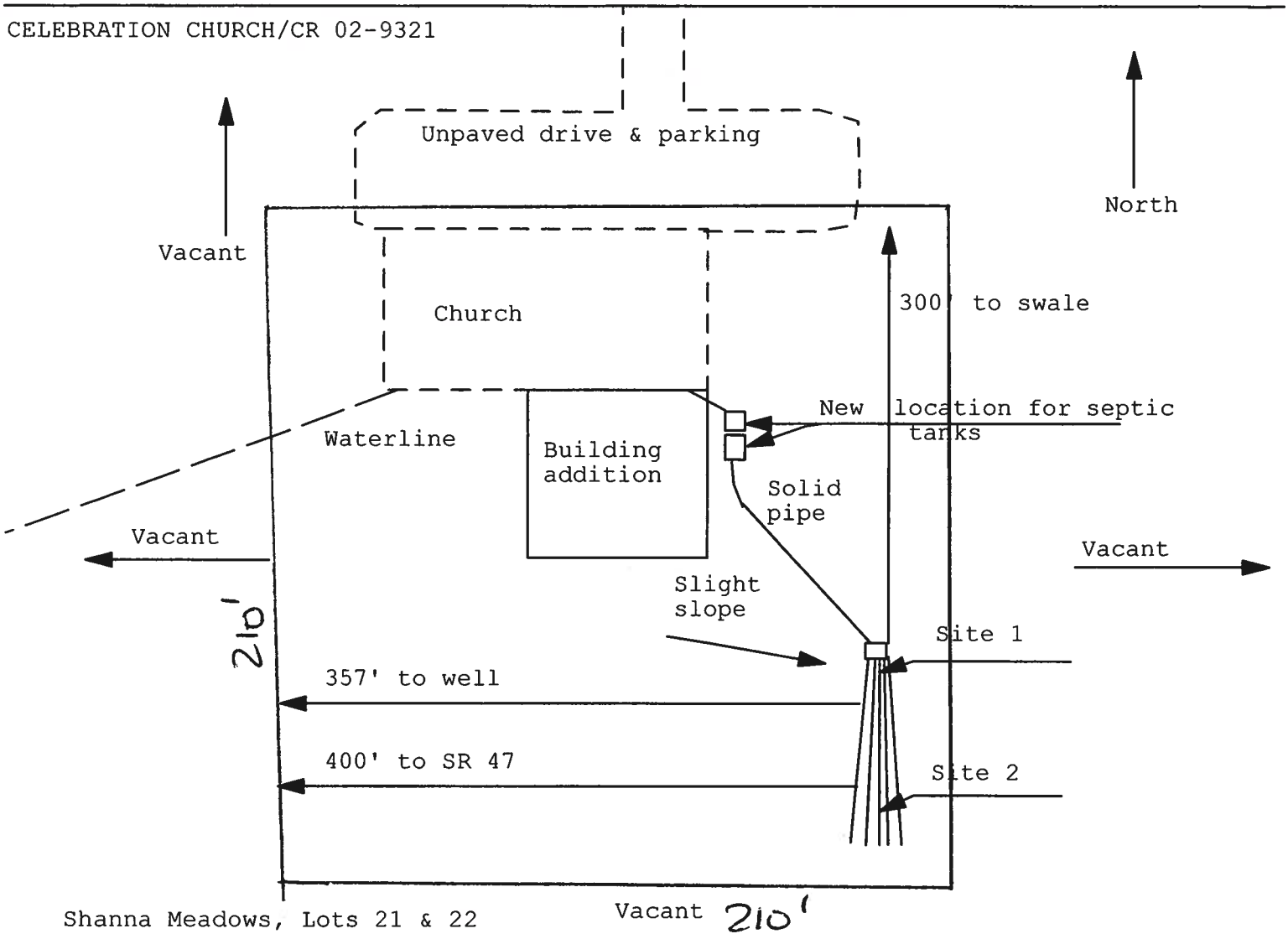

1 inch = 50 feet

Site Plan Submitted By Paul Lloyd **Date** 7/27/07

Plan Approved ✓ **Not Approved** ____ **Date** 8/3/07

By Mr Oh Columbia **CPHU**

Notes:

ENERGY EFFICIENCY CODE FOR BUILDING CONSTRUCTION

Florida Department of Community Affairs

EnergyGauge FlaCom v1.22 FORM 400A-2001

Whole Building Performance Method for Commercial Buildings

Jurisdiction: COLUMBIA COUNTY, COLUMBIA COUNTY, FL (221000)

Short Desc: New Prj
Owner: Celebration Community Church
Address:
Morning Star Glenn
City: Fort White
State: FL
Zip: 32038

Type: Assembly
Class: New Finished building

Project: Celebration Community Church Fellowship Hall

PermitNo: 0
Storeys: 1

GrossArea: 2952
Net Area: 2952

Max Tonnage: 5 (if different, write in)

Compliance Summary

Component	Design	Criteria	Result
Gross Energy Use	71.16	100.00	**PASSES**
Other Envelope Requirements - A			**PASSES**
LIGHTING CONTROLS			**PASSES**
EXTERNAL LIGHTING			**PASSES**
HVAC SYSTEM			**PASSES**
PLANT			**PASSES**
WATER HEATING SYSTEMS			**PASSES**
PIPING SYSTEMS			**PASSES**
Met all required compliance from Check List?			**Yes/No/NA**

IMPORTANT NOTE: An input report Print-Out from EnergyGauge FlaCom of this design building must be submitted along with this Compliance Report.

COMPLIANCE CERTIFICATION:

I hereby certify that the plans and specifications covered by this calculation are in compliance with the Florida Energy Efficiency Code. **PREPARED BY:** William H. Freeman **DATE:** 8/16/07 I hereby certify that this building is in compliance with the Florida Energy Efficiency Code. **OWNER AGENT:** Celebration Community Ch **DATE:**	Review of the plans and specifications covered by this calculation indicates compliance with the Florida Energy Code. Before construction is completed, this building will be inspected for compliance in accordance with Section 553.908, F.S. **BUILDING OFFICIAL:** **DATE:**

If required by Florida law, I hereby certify (*) that the system design is in compliance with the Florida Energy Code.

		REGISTRATION No.
ARCHITECT :	William H. Freeman	PE #56001
ELECTRICAL SYSTEM DESIGNER	William H. Freeman	PE #56001
LIGHTING SYSTEM DESIGNER:	William H. Freeman	PE #56001
MECHANICAL SYSTEM DESIGNER:	William H. Freeman	PE #56001
PLUMBING SYSTEM DESIGNER:	William H. Freeman	

(*) Signature is required where Florida Law requires design to be performed by registered design professionals. Typed names and registration numbers may be used where all relevant information is contained on signed/sealed plans.

Project: New Prj
Title: Celebration Community Church Fellowship Hall
Type: Assembly
Location: COLUMBIA COUNTY, COLUMBIA COUNTY, FL (221000)
(WEA F

Whole Building Compliance

	Design	Reference
Total	*71.16*	*100.00*
ELECTRICITY	71.16	100.00
AREA LIGHTS	15.33	36.57
MISC EQUIPMT	2.12	2.12
PUMPS & MISC	0.07	0.07
SPACE COOL	21.87	29.47
VENT FANS	31.76	31.76

Credits & Penalties (if any): Modified Points: = 71.16 **PASSES**

Project: New Prj
Title: Celebration Community Church Fellowship Hall
Type: Assembly
Location: COLUMBIA COUNTY, COLUMBIA COUNTY, FL (221000)
(WEA F

Other Envelope Requirements

Item	Zone	Description	Design	Limit	Meet Req.
Pr0Zo1Rf1	Pr0Zo1	Exterior Roof - Max Uo Limit	0.03	0.09	Yes

Meets Other Envelope Requirements

Project: New Prj
Title: Celebration Community Church Fellowship Hall
Type: Assembly
Location: COLUMBIA COUNTY, COLUMBIA COUNTY, FL (221000)
(WEA F

External Lighting Compliance

Description	Category	Allowance (W/Unit)	Area or Length or No. of Units (Sqft or ft)	ELPA (W)	CLP (W)
Ext Light 1	Entrance (without Canopy)	30.00	100.0	3.000	500
Ext Light 2	Entrance (without Canopy)	30.00	500.0	15.000	250

Design: 750 (W)
Allowance: 18000 (W)

PASSES

Project: New Prj
Title: Celebration Community Church Fellowship Hall
Type: Assembly
Location: COLUMBIA COUNTY, COLUMBIA COUNTY, FL (221000)
(WEA F

Lighting Controls Compliance

Acronym	Ashrae ID	Description	Area (sq.ft)	No. of Tasks	Design CP	Min CP	Compli-ance
Pr0Zo1Sp1	133	Banquet/Multi purpose (Multiple Functions) Alt 78	126	1	32	32	PASSES
Pr0Zo1Sp2	26	Offices (Partitions>4.5 ft below ceiling) Enclosed offices, all open plan offices without partitions	105	1	4	4	PASSES
Pr0Zo1Sp3	3	Classroom/Lecture Hall	120	1	8	8	PASSES
Pr0Zo1Sp4	13	Toilet and Washroom	90	1	4	4	PASSES
Pr0Zo1Sp5	4	Electrical Mechanical Equipment Room - General	66	1	2	2	PASSES

PASSES

Project: New Prj
Title: Celebration Community Church Fellowship Hall
Type: Assembly
Location: COLUMBIA COUNTY, COLUMBIA COUNTY, FL (221000)
(WEA F

System Report Compliance

Pr0Sy1 System 1 Constant Volume Air Cooled Split System < 65000 Btu/hr No. of Units 2

Component	Category	Capacity	Design Eff	Eff Criteria	Design IPLV	IPLV Criteria	Comp-liance
Cooling System	Air Cooled < 65000 Btu/h Cooling Capacity		10.00	10.00	8.00		PASSES
Air Handling System -Supply	Air Handler (Supply) - Constant Volume		0.80	0.80			PASSES

PASSES

Plant Compliance

Description	Installed No	Size	Design Eff	Min Eff	Design IPLV	Min IPLV	Category	Comp liance

None

Project: New Prj
Title: Celebration Community Church Fellowship Hall
Type: Assembly
Location: COLUMBIA COUNTY, COLUMBIA COUNTY, FL (221000)
(WEA F

Water Heater Compliance

Description	Type	Category	Design Eff	Min Eff	Design Loss	Max Loss	Comp liance
Water Heater 1	Storage Water Heater - Electric	<=120 [gal] & <= 12 [kW]	0.90	0.87			PASSES

PASSES

Piping System Compliance

Category	Pipe Dia [inches]	Is Runout?	Operating Temp [F]	Ins Cond [Btu-in/hr .SF.F]	Ins Thick [in]	Req Ins Thick [in]	Compliance

None

Project: New Prj
Title: Celebration Community Church Fellowship Hall
Type: Assembly
Location: COL

Other Required Compliance

Category	Section	Requirement (write N/A in box if not applicable)	Check
Infiltration	406.1	Infiltration Criteria have been met	☐
System	407.1	HVAC Load sizing has been performed	☐
Ventilation	409.1	Ventilation criteria have been met	☐
ADS	410.1	Duct sizing and Design have been performed	☐
T & B	410.1	Testing and Balancing will be performed	☐
Electrical	413.1	Metering criteria have been met	☐
Motors	414.1	Motor efficiency criteria have been met	☐
Lighting	415.1	Lighting criteria have been met	☐
O & M	102.1	Operation/maintenance manual will be provided to owner	☐
Roof/Ceil	404.1	R-19 for Roof Deck with supply plenums beneath it	☐
Report	101	Input Report Print-Out from EnergyGauge FlaCom attached?	☐

ENERGY EFFICIENCY CODE FOR BUILDING CONSTRUCTION

Florida Department of Community Affairs

EnergyGauge FlaCom v1.22

INPUT DATA REPORT

Project Information

Project Name: New Prj

Project Title: Celebration Community Church Fellowship Hall

Address: Morning Star Glenn

State: FL

Zip: 32038

Owner: Celebration Community Church

Orientation: North

Building Type: Assembly

Building Classification: New Finished building

No.of Storeys: 1

GrossArea: 2952

Zones

No	Acronym	Description	Type	Load Profile	Area [sf]	Multiplier	Total Area [sf]	
1	Pr0Zo1	Fellowship Hall	CONDITIONED	Uses Building Load Profile	2952.0	1	2952.0	☐

Spaces

No	Acronym	Description	Type	Depth [ft]	Width [ft]	Height [ft]	Multi plier	Total Area [sf]	Total Volume [cf]	
In Zone: Pr0Zo1										
1	Pr0Zo1Sp1	Hall	Banquet/Multi purpose (Multiple Functions) Alt 78	14.00	9.00	9.00	16	2016.0	18144.0	☐
2	Pr0Zo1Sp2	Office	Offices (Partitions>4.5 ft below ceiling) Enclosed offices, all open plan offices without partitions	15.00	7.00	9.00	2	210.0	1890.0	☐
3	Pr0Zo1Sp3	Classroom	Classroom/Lecture Hall	15.00	8.00	9.00	4	480.0	4320.0	☐
4	Pr0Zo1Sp4	Restroom	Toilet and Washroom	9.00	10.00	9.00	2	180.0	1620.0	☐
5	Pr0Zo1Sp5	Mechanical Closet	Electrical Mechanical Equipment Room - General	6.00	11.00	9.00	1	66.0	594.0	☐

Lighting

No	Type	Power [W]	Control Type	No.of Ctrl pts	
In Zone: Pr0Zo1					
In Space: Pr0Zo1Sp1					
1	Compact Fluorescent	160.00	Manual On/Off	2	☐
In Space: Pr0Zo1Sp2					
1	Compact Fluorescent	160.00	Manual On/Off	2	☐
In Space: Pr0Zo1Sp3					
1	Compact Fluorescent	160.00	Manual On/Off	2	☐
In Space: Pr0Zo1Sp4					
1	Incandescent	60.00	Manual On/Off	2	☐
In Space: Pr0Zo1Sp5					
1	Incandescent	40.00	Manual On/Off	2	☐

Walls

No	Description	Type	Width [ft]	H (Effec) [ft]	Multi plier	Area [sf]	Direction	Conductance [Btu/hr. sf. F]	Heat Capacity [Btu/sf.F]	Dens. [lb/cf]	R-Value [h.sf.F/Btu]	
In Zone: Pr0Zo1												
1	North Wall	5/8" stucco /8"CMU/3/4"ISO BTWN24"oc/.5" Gyp	58.00	9.00	1	522.0	North	0.2067	5.7314	34.65	4.84	☐
2	West Wall	0.75 in. stucco, 2x4x16" oc, R11Batt, 0.5 in. gyp	52.67	9.00	1	474.0	West	0.1118	1.1829	14.94	8.94	☐
3	East Wall	0.75 in. stucco, 2x4x16" oc, R11Batt, 0.5 in. gyp	52.67	9.00	3	474.0	East	0.1118	1.1829	14.94	8.94	☐
4	South Wall	0.75 in. stucco, 2x4x16" oc, R11Batt, 0.5 in. gyp	58.00	9.00	1	522.0	South	0.1118	1.1829	14.94	8.94	☐

Windows

No	Description	Type	Shaded	UCen [Btu/hr sf F]	SC	Vis.Tr	W [ft]	H (Effec) [ft]	Multi plier	Total Area [sf]	
In Zone: Pr0Zo1											
In Wall: Pr0Zo1Wa2											
1	Pr0Zo1Wa2Wi1	DOUBLE CLEAR IG	No	0.6514	0.88	0.81	3.00	6.00	3	54.0	☐
In Wall: Pr0Zo1Wa3											
1	Pr0Zo1Wa3Wi1	DOUBLE CLEAR IG	No	0.6514	0.88	0.81	3.00	6.00	3	54.0	☐

Doors

No	Description	Type	Shaded?	Width [ft]	H (Effec) [ft]	Multi plier	Area [sf]	Cond. [Btu/hr. sf. F]	Dens. [lb/cf]	Heat Cap. [Btu/sf. F]	R-Value [h.sf.F/Btu]
In Zone: Pr0Zo1											

In Wall:	**Pr0Zo1Wa1**											
1	Double Door	Aluminum door, 1.25 in. polystyrene	No	6.00	7.00	1	42.0	0.1919	43.67	0.53	5.21	☐
2	Pr0Zo1Wa1Dr2	Aluminum door, 1.25 in. polystyrene	No	3.00	7.00	1	21.0	0.1919	43.67	0.53	5.21	☐
In Wall:	**Pr0Zo1Wa2**											
1	Pr0Zo1Wa2Dr1	Aluminum door, 1.25 in. polystyrene	No	3.00	7.00	1	21.0	0.1919	43.67	0.53	5.21	☐
In Wall:	**Pr0Zo1Wa4**											
1	Pr0Zo1Wa4Dr1	Aluminum door, 1.25 in. polystyrene	No	3.00	7.00	1	21.0	0.1919	43.67	0.53	5.21	☐

Roofs

No	Description	Type	Width [ft]	H (Effec) [ft]	Multi plier	Area [sf]	Tilt [deg]	Cond. [Btu/hr. Sf. F]	Heat Cap [Btu/sf. F]	Dens. [lb/cf]	R-Value [h.sf.F/Btu]	
In Zone:	**Pr0Zo1**											
1	Pr0Zo1Rf1	Shngl/1/2"WD Deck/WD Truss/9" Batt/Gyp Brd	58.00	52.67	1	3054.9	0.00	0.0320	1.50	8.22	31.24	☐

Skylights

No	Description	Type	UCen [Btu/hr sf F]	Shading Coeff	Vis.Trans	W [ft]	H (Effec) [ft]	Multiplier	Area [Sf]	Total Area [Sf]	
In Zone:											
In Roof:											☐

Floors

No	Description	Type	Width [ft]	H (Effec) [ft]	Multi plier	Area [sf]	Cond. [Btu/hr. sf. F]	Heat Cap. [Btu/sf. F]	Dens. [lb/cf]	R-Value [h.sf.F/Btu]
In Zone: Pr0Zo1										
1	Pr0Zo1Fl1	Concrete floor, carpet and rubber pad	58.00	52.67	1	3054.9	0.5987	9.33	140.00	1.67

Systems

Pr0Sy1 **System 1** **Constant Volume Air Cooled Split System < 65000 Btu/hr** **No. Of Units 2**

Component	Category	Capacity	Efficiency	IPLV
1	Cooling System (Air Cooled < 65000 Btu/h Cooling Capacity)	60000.00	10.00	8.00
2	Air Handling System -Supply (Air Handler (Supply) - Constant Volume)	2000.00	0.80	

Plant

Equipment	Category	Size	Inst.No	Eff.	IPLV

Water Heaters

	W-Heater Description	Capacit	Cap.Unit	I/P Rt.	Efficienc	Loss
1	Storage Water Heater - Electric	50	Gal	[kW]	0.9000 [EF]	[%/hr]

Ext-Lighting

	Description	Categories.	Area/Len/No. of units [sf/ft/No]	Wattage [W]
1	Ext Light 1	Entrance (without Canopy)	100.00	500.00
2	Ext Light 2	Entrance (without Canopy)	500.00	250.00

Piping

No	Type	Operating Temperature [F]	Insulation Conductivity [Btu-in/h.sf.F]	Nomonal pipe Diameter [in]	Insulation Thickness [in]	Is Runout?

Fenestration Used

Name	Glass Type	No. of Panes	Glass Conductance [Btu/h.sf.F]	SC	VLT	Frame Conductance [Btu/h.sf.F]	Frame Absorptance
ApLbWnd6	DOUBLE CLEAR IG	2	0.6514	0.8800	0.8120	0.4340	0.7000

Materials Used

Mat No	Acronym	Description	Only R-Value Used	RValue [h.sf.F/Btu]	Thickness [ft]	Conductivity [Btu/h.ft.F]	Density [lb/cf]	SpecificHeat [Btu/lb.F]
18	Matl18	2 in. Wood	No	2.3857	0.1670	0.0700	37.00	0.3900
264	Matl264	ALUMINUM, 1/16 IN	No	0.0002	0.0050	26.0000	480.00	0.1000
214	Matl214	POLYSTYRENE, EXP., 1-1/4IN,	No	5.2100	0.1042	0.0200	1.80	0.2900

187	Matl187	GYP OR PLAS BOARD,1/2IN	No	0.4533	0.0417	0.0920	50.00	0.2000	☐
206	Matl206	CELLULOSE,FILL,5.5IN,R-20	No	20.8318	0.4583	0.0220	3.00	0.3300	☐
151	Matl151	CONC HW, DRD, 140LB, 4IN	No	0.4403	0.3333	0.7570	140.00	0.2000	☐
178	Matl178	CARPET W/RUBBER PAD	Yes	1.2300					☐
265	Matl265	Soil, 1 ft	No	2.0000	1.0000	0.5000	100.00	0.2000	☐
48	Matl48	6 in. Heavyweight concrete	No	0.5000	0.5000	1.0000	140.00	0.2000	☐
123	Matl123	CONC BLOCK MW,8IN,HOLLOW	No	1.7227	0.6667	0.3870	53.00	0.2000	☐
159	Matl159	CONC HW-UNDRD-140LB-4IN	No	0.3202	0.3333	1.0410	140.00	0.2000	☐
57	Matl57	3/4 in. Plaster or gypsum	No	0.1488	0.0625	0.4200	100.00	0.2000	☐
72	Matl72	AIR LAYER, 3/4IN OR LESS, VERT. WALLS	Yes	0.9000					☐
267	Matl267	0.75" stucco	No	0.1563	0.0625	0.4000	16.00	0.2000	☐
266	Matl266	2x4@16" oc + R11 Batt	No	8.3343	0.2917	0.0350	9.70	0.2000	☐
215	Matl215	POLYSTYRENE, EXP., 2IN,	No	8.3350	0.1667	0.0200	1.80	0.2900	☐
105	Matl105	CONC BLK HW, 8IN, HOLLOW	No	1.1002	0.6667	0.6060	69.00	0.2000	☐
256	Matl256	WOOD, SOFT, 1-1/2IN	No	1.8939	0.1250	0.0660	32.00	0.3300	☐
268	Matl268	0.625" stucco	No	0.1302	0.0521	0.4000	16.00	0.2000	☐
42	Matl42	8 in. Lightweight concrete block	No	2.0212	0.6670	0.3300	38.00	0.2000	☐
269	Matl269	.75" ISO BTWN24" oc	No	2.2321	0.0625	0.0280	4.19	0.3000	☐
86	Matl86	BRICK, COMMON, 4IN	No	0.8012	0.3333	0.4160	120.00	0.2000	☐
211	Matl211	POLYSTYRENE,EXP.,1/2IN,	No	2.0850	0.0417	0.0200	1.80	0.2900	☐
12	Matl12	3 in. Insulation	No	10.0000	0.2500	0.0250	2.00	0.2000	☐
218	Matl218	POLYURETHANE,EXP.,1/2IN,	No	3.2077	0.0417	0.0130	1.50	0.3800	☐
23	Matl23	6 in. Insulation	No	20.0000	0.5000	0.0250	5.70	0.2000	☐
4	Matl4	Steel siding	No	0.0002	0.0050	26.0000	480.00	0.1000	☐
271	Matl271	2x4@24" oc + R11 Batt	No	10.4179	0.2917	0.0280	7.11	0.2000	☐
272	Matl272	Panel with 7/16" panels	Yes	0.9044					☐
273	Matl273	Hollow core flush (1.375")	Yes	1.2777					☐
274	Matl274	Solid core flush (1.375")	Yes	1.7141					☐

275	Matl275	Panel with 7/16" panels (1.375")	Yes	1.0019					☐
276	Matl276	Hollow core flush (1.75")	Yes	1.3239					☐
277	Matl277	Panel with 1-1/8" panels (1.75")	Yes	1.7141					☐
278	Matl278	Solid core flush (1.75")	Yes	1.6500					☐
279	Matl279	Solid core flush (2.25")	Yes	2.8537					☐
280	Matl280	Fiberglass/Mineral wool core	Yes	0.8167					☐
281	Matl281	Paper Honeycomb core	Yes	0.9357					☐
282	Matl282	Solid Urethane foam core	Yes	1.6500					☐
283	Matl283	Solid mineral fiberboard core	Yes	1.7816					☐
284	Matl284	Polystyrene core (18 ga steel) 1	Yes	2.0071					☐
285	Matl285	Polyurethane core (18 ga steel) 2	Yes	2.5983					☐
286	Matl286	Polyurethane core (24 ga steel) 1	Yes	2.5983					☐
287	Matl287	Polyurethane core (24 ga steel) 2	Yes	4.1500					☐
288	Matl288	Solid Urethane foam core	Yes	4.1500					☐
81	Matl81	ASPHALT-ROOFING, ROLL	Yes	0.1500					☐
244	Matl244	PLYWOOD, 1/2IN	No	0.6318	0.0417	0.0660	34.00	0.2900	☐
185	Matl185	CLAY TILE, PAVER, 3/8IN	No	0.0301	0.0313	1.0410	120.00	0.2000	☐
82	Matl82	ASPHALT-SHINGLE AND SIDING	Yes	0.4400					☐
11	Matl11	2 in. Insulation	No	6.6800	0.1670	0.0250	2.00	0.2000	☐
47	Matl47	2 in. Heavyweight concrete	No	0.1670	0.1670	1.0000	140.00	0.2000	☐
95	Matl95	CONC BLOCK HW-4IN-HOLLOW	No	0.7107	0.3333	0.4690	101.00	0.2000	☐
248	Matl248	ROOF GRAVEL OR SLAG1/2IN	No	0.0500	0.0417	0.8340	55.00	0.4000	☐
94	Matl94	BUILT-UP ROOFING, 3/8IN	No	0.3366	0.0313	0.0930	70.00	0.3500	☐

Constructs Used

No	Name	Simple Construct	Massless Construct	Conductance [Btu/h.sf.F]	Heat Capacity [Btu/sf.F]	Density [lb/cf]	RValue [h.sf.F/Btu]
1002	Aluminum door, 1.25 in. polystyrene	No	No	0.19	0.53	43.67	5.2104

Layer	Material No.	Material	Thickness [ft]	Framing Factor
1	264	ALUMINUM, 1/16 IN	0.0050	0.00
2	214	POLYSTYRENE, EXP., 1-1/4IN,	0.1042	0.00
3	264	ALUMINUM, 1/16 IN	0.0050	0.00

No	Name	Simple Construct	Massless Construct	Conductance [Btu/h.sf.F]	Heat Capacity [Btu/sf.F]	Density [lb/cf]	RValue [h.sf.F/Btu]
1004	Concrete floor, carpet and rubber pad	No	No	0.60	9.33	140.00	1.6703

Layer	Material No.	Material	Thickness [ft]	Framing Factor
1	151	CONC HW, DRD, 140LB, 4IN	0.3333	0.00
2	178	CARPET W/RUBBER PAD		0.00

No	Name	Simple Construct	Massless Construct	Conductance [Btu/h.sf.F]	Heat Capacity [Btu/sf.F]	Density [lb/cf]	RValue [h.sf.F/Btu]
1009	0.75 in. stucco, 2x4x16" oc, R11Batt, 0.5 in. gyp	No	No	0.11	1.18	14.94	8.9438

Layer	Material No.	Material	Thickness [ft]	Framing Factor
1	267	0.75" stucco	0.0625	0.00
2	266	2x4@16" oc + R11 Batt	0.2917	0.00
3	187	GYP OR PLAS BOARD,1/2IN	0.0417	0.00

No	Name	Simple Construct	Massless Construct	Conductance [Btu/h.sf.F]	Heat Capacity [Btu/sf.F]	Density [lb/cf]	RValue [h.sf.F/Btu]
1011	5/8" stucco /8"CMU/3/4"ISO BTWN24"oc/.5" Gyp	No	No	0.21	5.73	34.65	4.8368

Layer	Material No.	Material	Thickness [ft]	Framing Factor
1	268	0.625" stucco	0.0521	0.00
2	42	8 in. Lightweight concrete block	0.6670	0.00
3	269	.75" ISO BTWN24" oc	0.0625	0.00
4	187	GYP OR PLAS BOARD,1/2IN	0.0417	0.00

No	Name	Simple Construct	Massless Construct	Conductance [Btu/h.sf.F]	Heat Capacity [Btu/sf.F]	Density [lb/cf]	RValue [h.sf.F/Btu]
1038	Shngl/1/2"WD Deck/WD Truss/9" Batt/Gyp Brd	No	No	0.03	1.50	8.22	31.2351

Layer	Material No.	Material	Thickness [ft]	Framing Factor
1	81	ASPHALT-ROOFING, ROLL		0.00
2	244	PLYWOOD, 1/2IN	0.0417	0.00
3	12	3 in. Insulation	0.2500	0.00
4	23	6 in. Insulation	0.5000	0.00
5	187	GYP OR PLAS BOARD,1/2IN	0.0417	0.00

#26238

PERMIT#_____

NOTICE OF COMMENCEMENT

STATE OF: FLORIDA COUNTY OF: COLUMBIA CITY OF:

****

THE UNDERSIGNED hereby gives notice that improvement will be made to certain real property, and in accordance with Chapter 713, Florida Statutes, the following information is provided in this Notice of Commencement.

****

DESCRIPTION OF PROPERTY

R03752-121

SECTION: 34,35 TOWNSHIP: 5 south RANGE: 16 east TAX PARCEL #: R03758-122
LOT: 21,22 BLOCK: _____ SUBDIVISION: Shoals Meadows
PLATBOOK #: 7 MAP PAGE #: 76,77
STREET ADDRESS: 174 SW Morningstar Glen

****

GENERAL DESCRIPTION OF IMPROVEMENT

TO CONSTRUCT: 3,000 sq. ft addition

****

OWNER INFORMATION

NAME: Celebration Community Church PHONE NUMBER: 754-1144
ADDRESS: 174 SW Morningstar Gln, Ft. White
STATE: FLORIDA ZIP CODE: 32038
INTEREST IN THE PROPERTY: _____
FEE SIMPLE TITLEHOLDER NAME (OTHER THAN OWNER): _____
FEE SIMPLE TITLEHOLDER ADDRESS: _____

****

CONTRACTOR NAME: J.L. Dupree ~~Construction~~ PHONE NUMBER: 754-5678
COMPANY NAME: J.L. Dupree Construction FAX NUMBER: 754-5431
ADDRESS: P.O. Bx 2861 CITY: Lake City
STATE: Fl. ZIP CODE: 32056
BONDING COMPANY: N/A PHONE NUMBER: ~~754-5678~~
ADDRESS: _____ FAX NUMBER: _____
CITY: _____ STATE: _____ ZIP CODE: _____

LENDER NAME: N/A PHONE NUMBER: _____
ADDRESS: _____ FAX NUMBER: _____
CITY: _____ STATE: _____ ZIP CODE: _____

****

Persons within the State of Florida designated by owner upon whom notices or other documents may be served as provided by Section 713.13(1)(a), Florida Statute:
NAME: N/A ADDRESS: _____
CITY: _____ STATE: _____ ZIP CODE: _____
In addition to himself, the owner designates N/A of _____
To receive a copy of the Lienor's notice as provided in Section 713.13(1)(b) Florida Statutes.

****

Expiration date of Notice of Commencement (the expiration date is one (1) year from the date of recording unless a different date is specified): _____

SIGNATURE OF OWNER: [signature]
Sworn to and subscribed before me this 23 day of August, 2007.
Known/personally/I.D. Shown Known personally
Notary: [signature] My commission expires: 2/20/10

Inst:200712019582 Date:8/28/2007 Time:3:24 PM
DC.P.DeWitt Cason .Columbia County Page 1 of 1

NOTARY PUBLIC STATE OF FLORIDA
CRYSTAL L KREIENHEDER
MY COMMISSION # DD520194
EXPIRES: Feb. 20, 2010
(407) 398-0153 Florida Notary Service.com

Date	Inspection	Inspect.	Owner	Pass	Location	Permit
09/26/07	Footer	Harry	J.L. Dupree - Celebration	OK	Shanna Meadows Lot 21	26238
09/26/07	Set Backs	Harry	J.L. Dupree - Celebration	OK	Shanna Meadows Lot 21	26238
10/04/07	Rough Plumbing	Harry	J.L. Dupree - Celebration	OK	Shanna Meadows Lot 21	26238
10/04/07	Slab	Harry	J.L. Dupree - Celebration	OK	Shanna Meadows Lot 21	26238

Date	Inspection	Inspect.	Owner	Pass	Location	Perm
05/05/08	Lintel	Harry	J.L. Dupree - Celebration	OK	Shanna Meadows Lot 21	2623
05/14/08	Lintel	Harry	J.L. Dupree - Celebration	OK	Shanna Meadows Lot 21	2623
05/20/08	Strapping - Partial	Wayne	J.L. Dupree - Celebration	OK	Shanna Meadows Lot 21	2623
05/21/08	Nailing	Wayne	J.L. Dupree - Celebration	OK	Shanna Meadows Lot 21	2623
07/15/08	Nailing	Wayne	J.L. Dupree - Celebration	OK	Shanna Meadows Lot 21	2623
08/26/08	Nailing	Harry	J.L. Dupree - Celebration	OK	174 SW Morningstar Glen	2623

Freeman Design Group inc
Engineers • Planners
161 N.W. Madison St. Suite 102
Lake City, Florida 32055
Tel: 386-758-4209
Fax: 386-758-4290

ok per B/C

October 5, 2007

Columbia County Building and Zoning
135 NE Hernando Avenue, Suite B21
Lake City, FL 32055

RE: Celebration Community Church

To Whom It May Concern:

The existing slab on the above referenced project has an elevation of 83.75. This will remain the same for the construction of the new facility. This elevation is adequate to prevent flood damage.

Sincerely,

William H. Freeman

William H. Freeman, P.E.
P.E. # 56001

Cal-Tech Testing, Inc.

• Engineering
• Geotechnical
• Environmental
Laboratories

P.O. Box 1625 • Lake City, FL 32056-1625 • Tel(386)755-3633 • Fax(386)752-5456
4784 Rosselle St., Jacksonville, FL 32254 • Tel(904)381-8901 • Fax(904)381-8902
2230 Greensboro Hwy • Quincy, FL 32351 • Tel(850)442-3495 • Fax(850)442-4008

REPORT OF IN-PLACE DENSITY TEST

JOB NO.: 07-00497
DATE TESTED: 10/1/07
DATE REPORTED: 10/3/07

PROJECT:	Celebration Community Church Addition, Fort White, FL
CLIENT:	Celebration Community Church of Southern Columbia County, Inc. 174 SW Morning Star Lake, Fort White, FL 32038
GENERAL CONTRACTOR:	Celebration Community Church Addition
EARTHWORK CONTRACTOR:	Celebration Community Church Addition
INSPECTOR:	Chad Day

ASTM METHOD	SOIL USE
(D-2922) Nuclear	BUILDING FILL

SPECIFICATION REQUIREMENTS: 95%

TEST NO.		TEST LOCATION	TEST DEPTH	WET DENSITY (lb/ft^3)	MOISTURE PERCENT	DRY DENSITY (lb/ft^3)	PROCTOR TEST NO.	PROCTOR VALUE	% MAXIMUM DENSITY
1		NE Corner, 10' South x 10' West	12"	109.2	5.3	103.7	1	106.8	97%
2		NW Corner, 10' South x 10' East	12"	105.4	4.0	101.3	1	106.8	95%
3		SW Corner, 12' East x 10' North	12"	106.8	3.7	103.0	1	106.8	96%
4		SE Corner, 12' West x 10' North	12"	107.7	4.9	102.7	1	106.8	96%

REMARKS: The Above Tests Meet Specification Requirements.

PROCTORS

PROCTOR NO.		SOIL DESCRIPTION	MAXIMUM DRY UNIT WEIGHT (lb/ft^3)	OPT. MOIST.	TYPE
1		Light Gray Sand	106.8	11.3	MODIFIED (ASTM D-1557)

Respectfully Submitted,
CAL-TECH TESTING, INC.

Linda Creamer, CEO, DSE

Linda M. Creamer
President - CEO

Reviewed By:

Date: 10/3/07
Licensed, Florida No: 57842

ee

The test results presented in this report are specific only to the samples tested at the time of testing. The tests were performed in accordance with generally accepted methods and standards. Since material conditions can vary between test locations and change with time, sound judgement should be exercised with regard to the use and interpretation of the data.

26238

BOARD OF COUNTY COMMISSIONERS
OFFICE OF

BUILDING & ZONING

COLUMBIA COUNTY, FLORIDA

BUILDING PERMIT RECEIPT

RECEIPT NUMBER / PERMIT NUMBER 000028379 DATE 02/18/2010

APPLICANT CURT MCDONALD

OWNER CELEBRATION COMMUNITY CHURCH

CONTRACTOR J.L. DUPREE CONSTRUCTION

PARCEL ID NUMBER 34-5S-16-03758-121 NUMBER OF EXISTING DWELLINGS 1

TYPE OF DEVELOPMENT RENEWAL SFD 26238

COMMENTS: RENEWAL OF 26238 WITH 50% OF THE INSPECTIONS REMAINING, CHARGES ARE FOR 50% OF PERMIT FEES. LETTER FROM CONTRACTOR ON FILE-NO CHANGES.

FEES:

BUILDING RENEWAL FEE 375.00 CERTIFICATION FEE 0.00

ZONING FEE SURCHARGE FEE 0.00

FLOOD ZONE FEE FLOOD DEVELOPMENT PERMIT

MOBILE HOME PERMIT RELOCATION PERMIT

TRAVEL TRAILER PERMIT RECONNECTION PERMIT

UTILITY POLE PERMIT WASTE ASSESSMENT FEE

FIRE FEE (5 ACRES OR LESS) CULVERT PERMIT

FIRE FEE (MORE THAN 5 ACRES)

CHECK NUMBER 18300 **TOTAL FEES CHARGES 375.00**

MAKE CHECKS PAYABLE TO: BCC (Board of County Commissioners)

NOTE: A SEPARATE CHECK IS REQUIRED FOR THE CULVERT WAIVER PERMITS

135 NE HERNANDO AVE.
SUITE B-21
LAKE CITY, FL 32055
Phone: 386-758-1008
Fax: 386-758-2160

spoke w/ office 9/11/07

Columbia County Building Permit Application

For Office Use Only Application # 0709-17 Date Received 9/6/07 By G Permit # 26238

Application Approved by - Zoning Official BLK Date 11.09.07 Plans Examiner OKJTH Date 9-11-07

Flood Zone X Development Permit N/A Zoning A-3 Land Use Plan Map Category A3

Comments Floor Elevation to be at 83.75' per engineer Elevation confirmation Letter required

☐ NOC ☑ EH ☑ Deed or PA ☐ Site Plan ☐ State Road Info ☐ Parent Parcel # ☐ Development Pe

Name Authorized Person Signing Permit Lamar DuPree Fax 386-754-5431 Phone 386-754-5678

Address 2902west U.S. Highway 90 P.O. Box 2861 Lake City, Fl 32055

Owners Name Celebration Community Church Phone 386-754-1144

911 Address 174 SW Morning Star Glenn, Fort White, Fl 32038

Contractors Name J.L. DuPree Construction Services, Inc. Phone 386-754-5678

Address 2902 West U.S. Highway 90 , P.O Box 2861 Lake City, Fl 32055

Fee Simple Owner Name & Address Celebration Community Church 174 SW Morning Star Glenn

Bonding Co. Name & Address N/A

Architect/Engineer Name & Address Freeman Design Group 161 NW Madison Street Suite # 102

Mortgage Lenders Name & Address N/A

Circle the correct power company - FL Power & Light - (Clay Elec.) - Suwannee Valley Elec. - Progressive En

Property ID Number R03752-121; R03758-122 Estimated Cost of Construction 150,000

Subdivision Name Shanna Meadows D3752-121 Lot 21,22 Block — Unit — Phase

Driving Directions SR 47 South, go through Columbia City, continue South, when you pass SW Watson Road on the left, the church will be approx.1 mile on the left.

Type of Construction Addition to Church Number of Existing Dwellings on Property 1

Total Acreage 10 Lot Size — Do you need a - Culvert Permit or Culvert Waiver or Have an Existing

Actual Distance of Structure from Property Lines - Front 158 Side 390 Side 242 Rear 280

Total Building Height 22' - 0 3/4 Number of Stories 1 Heated Floor Area 3016 Roof Pitch 6/12

Application is hereby made to obtain a permit to do work and installations as indicated. I certify that no work or installation has commenced prior to the issuance of a permit and that all work be performed to meet the standards all laws regulating construction in this jurisdiction.

OWNERS AFFIDAVIT: I hereby certify that all the foregoing information is accurate and all work will be done in compliance with all applicable laws and regulating construction and zoning.

WARNING TO OWNER: YOUR FAILURE TO RECORD A NOTICE OF COMMENCMENT MAY RESULT IN YOU PAYING TWICE FOR IMPROVEMENTS TO YOUR PROPERTY. IF YOU INTEND TO OBTAIN FINANCING, CONSULT WITH YOU LENDER OR ATTORNEY BEFORE RECORDING YOUR NOTICE OF COMMENCEMENT.

Owner Builder or Authorized Person by Notarized Letter

Contractor Signature

Contractors License Number CGC-060631

Competency Card Number

NOTARY STAMP/SEAL

NOTARY PUBLIC STATE OF FLORIDA Mark Allen Dawson Commission # DD538744 Expires: APR. 10, 2010 Bonded Thru Atlantic Bonding Co., Inc.

STATE OF FLORIDA
COUNTY OF COLUMBIA

Sworn to (or affirmed) and subscribed before me this 28th day of August 2007.

Personally known X or Produced Identification

Notary Signature

(Revised Sept. 20

SUWANNEE RIVER WATER MANAGEMENT DISTRICT
9225 CR 49
LIVE OAK, FLORIDA 32060
TELEPHONE: (386) 362-1001
TELEPHONE: 800-226-1066
FAX (386) 362-1056

GENERAL PERMIT

PERMITTEE:
CELEBRATION COMMUNITY CHURCH
174 SW MORNING STAR GLEN
FT. WHITE, FL 32038

PERMIT NUMBER: ERP02-0423M
DATE ISSUED: 07/16/2007
DATE EXPIRES: 07/16/2010
COUNTY: COLUMBIA
TRS: S34/T5S/R16E

PROJECT: CELEBRATION COMMUNITY CHURCH MODIFICATION

Approved entity to whom operation and maintenance may be transferred pursuant to rule 40B-4.1130, Florida Administrative Code (F.A.C.):

DICK SHORR
CELEBRATION COMMUNITY CHURCH
660 SOUTHWEST GRASSY LANE
FORT WHITE, FL 32038

Based on information provided, the Suwannee River Water Management District's (District) rules have been adhered to and an environmental resource general permit is in effect for the permitted activity description below:

Construction and operation of a surfacewater management system serving 0.13 acres of impervious surface on a total project area of 2.07 acres. The project is a church building and shall be constructed in a manner consistent with the application package submitted by Freeman Design Group, Inc. and received by the District on May 18, 2007. Additional information received on July 16, 2007 shall be a part of the application package. Approved plans are signed and sealed by William Freeman P.E. on June 18, 2007.

It is your responsibility to ensure that adverse off-site impacts do not occur either during or after construction. Any additional construction or alterations not authorized by this permit may result in flood control or water quality problems both on and off site and will be a violation of District rule.

You or any other substantially affected persons are entitled to request an administrative hearing or mediation. Please refer to enclosed notice of rights.

RECEIVED
JUL 26 2007

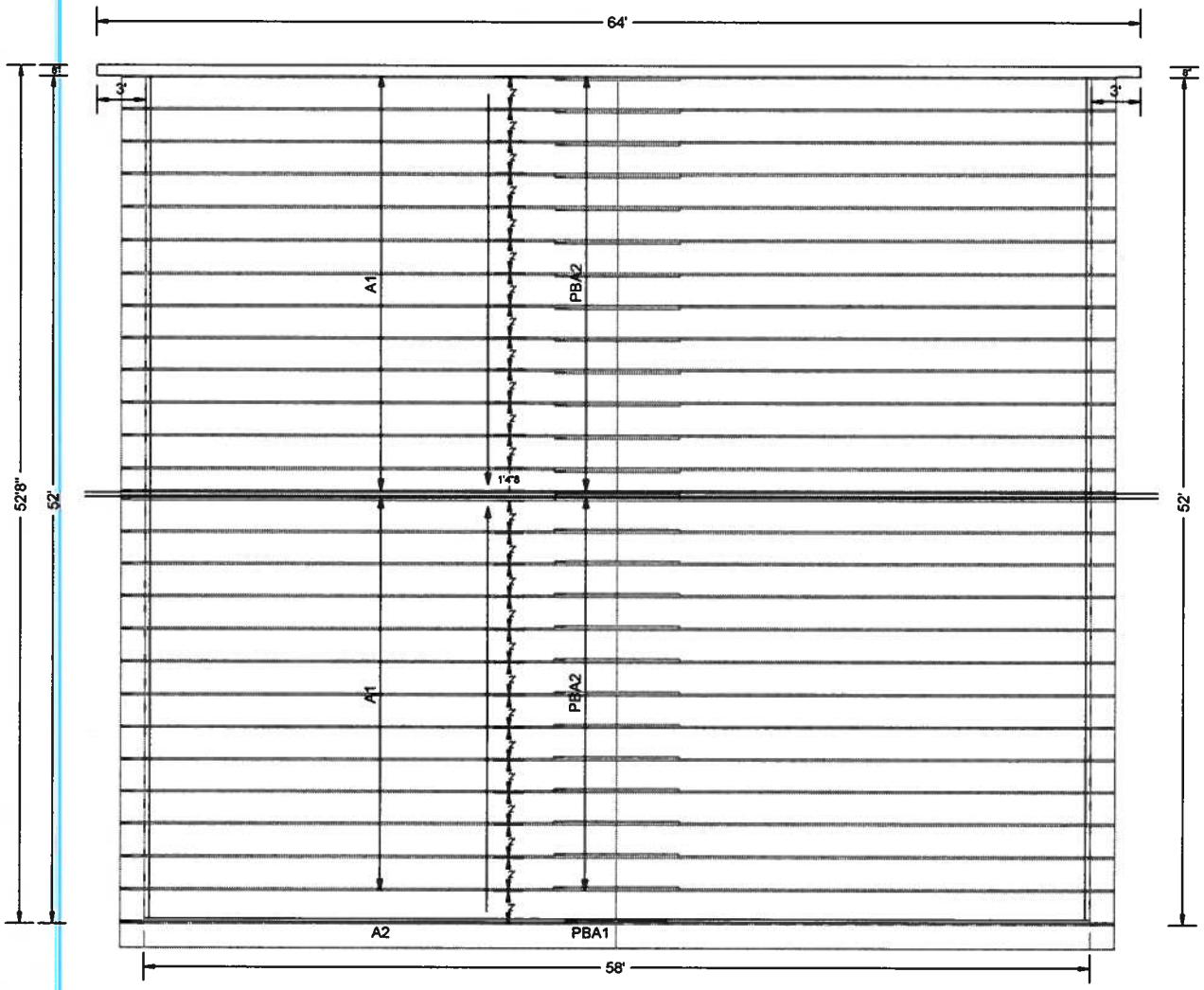

W.B. Howland Truss Co.
P.O. Box 700
Live Oak, FL 32064
(386) 362-1235
(386) 362-7124 (fax)

ROOF PITCH:	5/12
CLG PITCH:	FLAT
OVERHANG:	24" CANTILEVER
LOADING:	40 PSF T.L./STANDARD
WIND LOAD:	110 MPH/ENCLOSED
EXT WALLS:	2x4 FRAMING
DATE:	6-6-07

Roof Plane Sheathing Area = 3535 sq. ft
Gable Sheathing Area = 361 sq. ft
Total Sheathing Area = 3897 sq. ft
Fascia Material = 173 linear ft
Valley Flashing Material = 0 linear ft
Ridge Cap Material = 54 linear ft
Hip Ridge Material = 0 linear ft

Job Name: Celebration Community Chu
Customer: J.L. DUPREE
Designer: Chris McCall

JOB NO:
3922

PAGE NO:
1 OF 1

ITW Building Components Group, Inc.

1950 Marley Drive Haines City, FL 33844
Florida Engineering Certificate of Authorization Number: 567
Florida Certificate of Product Approval # FL1999
 Document ID:1TA2215-Z0620155237

Truss Fabricator:	W.B. Howland
Job Identification:	3922-/Celebration Community Chu /J.L. DUPREE -- LAKE CITY, FL
Truss Count:	4
Model Code:	Florida Building Code 2004 and 2006 Supplement
Truss Criteria:	ANSI/TPI-2002(STD)/FBC
Engineering Software:	Alpine Software,Version 7.36.
Structural Engineer of Record:	The identity of the structural EOR did not exist as of
Address:	the seal date per section 61G15-31.003(5a) of the FAC
Minimum Design Loads:	Roof - 40.0 PSF @ 1.25 Duration
	Floor - N/A
	Wind - 110 MPH ASCE 7-02 -Closed

Seal Date: 08/20/2007

-Truss Design Engineer-
James F. Collins Jr.
Florida License Number: 52212
1950 Marley Drive
Haines City, FL 33844

Notes:

1. Determination as to the suitability of these truss components for the structure is the responsibility of the building designer/engineer of record, as defined in ANSI/TPI 1
2. The drawing date shown on this index sheet must match the date shown on the individual truss component drawing.
3. As shown on attached drawings; the drawing number is preceded by: HCUSR215

Details: BRCLBSUB-GBLLETIN-

#	Ref Description	Drawing#	Date
1	21371--A1	07232043	08/20/07
2	21372--A2	07232044	08/20/07
3	21373--PBA1	07232045	08/20/07
4	21374--PBA2	07232046	08/20/07

THIS DWG PREPARED FROM COMPUTER INPUT (LOADS & DIMENSIONS) SUBMITTED BY TRUSS MFR.

Top chord 2x6 SP #2 N
Bot chord 2x4 SP #2 N :B1, B5 2x4 SP SS:
Webs 2x4 SP #2 N

Calculated horizontal deflection is 0.17" due to live load and 0.18" due to dead load.

In lieu of structural panels use purlins to brace all flat TC @ 24" OC.

WARNING: Furnish a copy of this DWG to the installation contractor. Special care must be taken during handling, shipping and installation of trusses. See "WARNING" note below.

110 mph wind, 15.00 ft mean hgt, ASCE 7-02, CLOSED bldg, Located anywhere in roof, CAT III OR IV, EXP C, wind TC DL=5.0 psf, wind BC DL=5.0 psf. Iw=1.15 GCpi(+/-)=0.18

Wind reactions based on MWFRS pressures.

(A) Continuous lateral bracing equally spaced on member.

Deflection meets L/240 live and L/180 total load.

The overall height of this truss excluding overhang is 11-0-0.

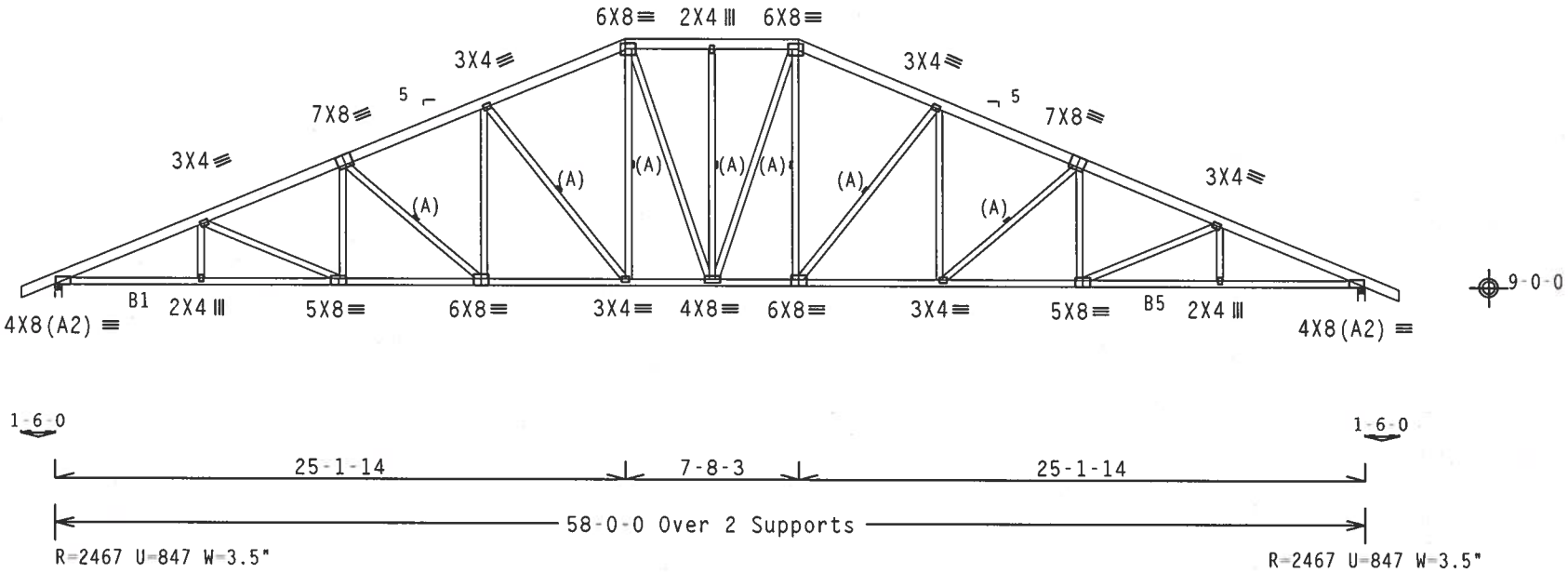

Design Crit: TPI-2002(STD)/FBC

PLT TYP. Wave

Cq/RT=1.00(1.25)/10(0) 7.36.0424.12 QTY:27 FL/-/5/-/-/R/- Scale =.125"/Ft.

ALPINE

ITW Building Components Group, Inc.
Haines City, FL 33844
FL Certificate of Authorization # 567

WARNING TRUSSES REQUIRE EXTREME CARE IN FABRICATION, HANDLING, SHIPPING, INSTALLING AND BRACING. REFER TO BCSI (BUILDING COMPONENT SAFETY INFORMATION), PUBLISHED BY TPI (TRUSS PLATE INSTITUTE, 218 NORTH LEE STREET, SUITE 312, ALEXANDRIA, VA. 22314) AND WTCA (WOOD TRUSS COUNCIL OF AMERICA, 6300 ENTERPRISE LANE, MADISON, WI 53719) FOR SAFETY PRACTICES PRIOR TO PERFORMING THESE FUNCTIONS. UNLESS OTHERWISE INDICATED TOP CHORD SHALL HAVE PROPERLY ATTACHED STRUCTURAL PANELS AND BOTTOM CHORD SHALL HAVE A PROPERLY ATTACHED RIGID CEILING.

IMPORTANTFURNISH A COPY OF THIS DESIGN TO THE INSTALLATION CONTRACTOR. ITW BCG, INC. SHALL NOT BE RESPONSIBLE FOR ANY DEVIATION FROM THIS DESIGN; ANY FAILURE TO BUILD THE TRUSS IN CONFORMANCE WITH TPI; OR FABRICATING, HANDLING, SHIPPING, INSTALLING & BRACING OF TRUSSES.
DESIGN CONFORMS WITH APPLICABLE PROVISIONS OF NDS (NATIONAL DESIGN SPEC. BY AF&PA) AND TPI. ITW BCG CONNECTOR PLATES ARE MADE OF 20/18/16GA (W,H/SS/K) ASTM A653 GRADE 40/60 (W, K/H,SS) GALV. STEEL. APPLY PLATES TO EACH FACE OF TRUSS AND, UNLESS OTHERWISE LOCATED ON THIS DESIGN, POSITION PER DRAWINGS 160A Z. ANY INSPECTION OF PLATES FOLLOWED BY (1) SHALL BE PER ANNEX A3 OF TPI1-2002 SEC.3. A SEAL ON THIS DRAWING INDICATES ACCEPTANCE OF PROFESSIONAL ENGINEERING RESPONSIBILITY SOLELY FOR THE TRUSS COMPONENT DESIGN SHOWN. THE SUITABILITY AND USE OF THIS COMPONENT FOR ANY BUILDING IS THE RESPONSIBILITY OF THE BUILDING DESIGNER PER ANSI/TPI 1 SEC. 2.

JAMES F. COLLINS, JR. LICENSE No. 52212 STATE OF FLORIDA PROFESSIONAL ENGINEER

Aug 2

TC LL	20.0 PSF	REF	R215-- 21371
TC DL	10.0 PSF	DATE	08/20/07
BC DL	10.0 PSF	DRW	HCUSR215 07232043
BC LL	0.0 PSF	HC-ENG	RA/WHK
TOT.LD.	40.0 PSF	SEQN-	181980
DUR.FAC.	1.25	FROM	CDM
SPACING	24.0"	JREF-	1TA2215_Z06

THIS DWG PREPARED FROM COMPUTER INPUT (LOADS & DIMENSIONS) SUBMITTED BY TRUSS MFR.

Top chord 2x6 SP #2 N
Bot chord 2x4 SP #2 N
Webs 2x4 SP #2 N

(A) Continuous lateral bracing equally spaced on member.

Deflection meets L/240 live and L/180 total load.

The overall height of this truss excluding overhang is 11-0-0.

SEE DWGS A11015EE0207 FOR ADDITIONAL REQUIREMENTS.

THE BUILDING DESIGNER IS RESPONSIBLE FOR THE DESIGN OF THE ROOF AND CEILING DIAPHRAGMS, GABLE END SHEAR WALLS, AND SUPPORTING SHEAR WALLS. SHEAR WALLS MUST PROVIDE CONTINUOUS LATERAL RESTRAINT TO THE GABLE END. ALL CONNECTIONS TO BE DESIGNED BY THE BUILDING DESIGNER.

110 mph wind, 15.00 ft mean hgt, ASCE 7-02, CLOSED bldg, Located anywhere in roof, CAT III OR IV, EXP C, wind TC DL=5.0 psf, wind BC DL=5.0 psf. Iw=1.15 GCpi(+/-)=0.18

Wind reactions based on MWFRS pressures.

See DWG GBLLETIN0207 for more requirements.

In lieu of structural panels use purlins to brace all flat TC @ 24" OC.

WARNING: Furnish a copy of this DWG to the installation contractor. Special care must be taken during handling, shipping and installation of trusses. See "WARNING" note below.

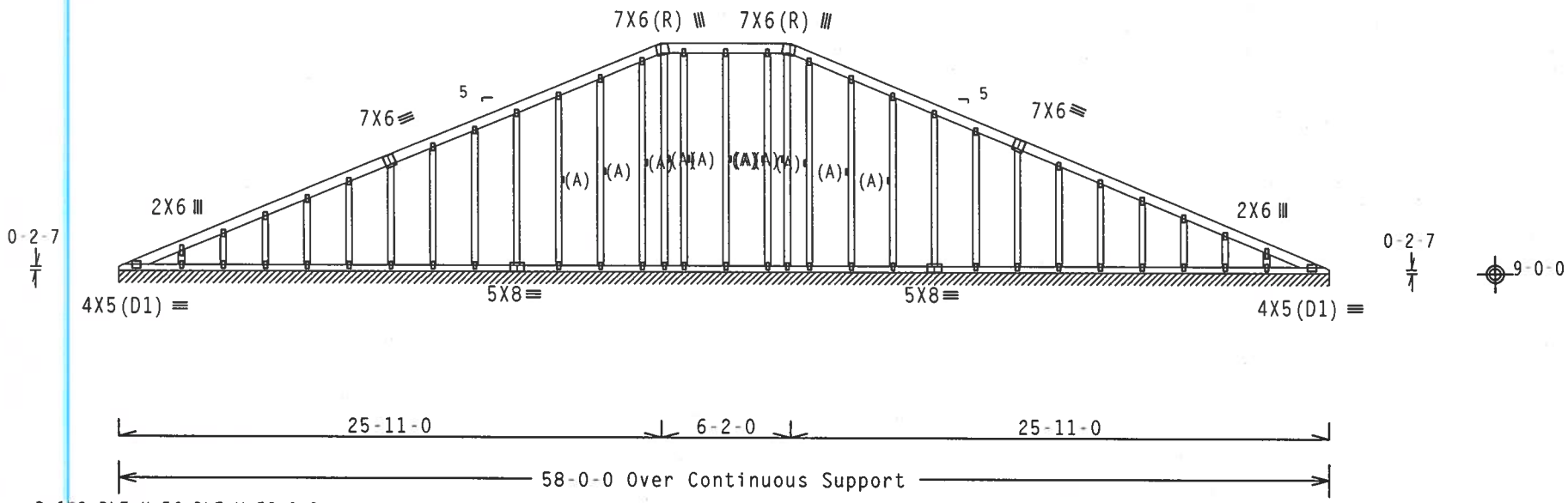

Note: All Plates Are 2X4 Except As Shown.

Design Crit: TPI-2002(STD)/FBC

PLT TYP. Wave Cq/RT=1.00(1.25)/10(0) 7.36.0424.13 QTY:1 FL/-/5/-/-/R/- Scale =.125"/Ft.

ALPINE
ITW Building Components Group, Inc.
Haines City, FL 33844
FL Certificate of Authorization # 567

WARNING TRUSSES REQUIRE EXTREME CARE IN FABRICATION, HANDLING, SHIPPING, INSTALLING AND BRACING. REFER TO BCSI (BUILDING COMPONENT SAFETY INFORMATION), PUBLISHED BY TPI (TRUSS PLATE INSTITUTE, 218 NORTH LEE STREET, SUITE 312, ALEXANDRIA, VA, 22314) AND WTCA (WOOD TRUSS COUNCIL OF AMERICA, 6300 ENTERPRISE LANE, MADISON, WI 53719) FOR SAFETY PRACTICES PRIOR TO PERFORMING THESE FUNCTIONS. UNLESS OTHERWISE INDICATED TOP CHORD SHALL HAVE PROPERLY ATTACHED STRUCTURAL PANELS AND BOTTOM CHORD SHALL HAVE A PROPERLY ATTACHED RIGID CEILING.

IMPORTANTFURNISH A COPY OF THIS DESIGN TO THE INSTALLATION CONTRACTOR. ITW BCG, INC. SHALL NOT BE RESPONSIBLE FOR ANY DEVIATION FROM THIS DESIGN; ANY FAILURE TO BUILD THE TRUSS IN CONFORMANCE WITH TPI; OR FABRICATING, HANDLING, SHIPPING, INSTALLING & BRACING OF TRUSSES.
DESIGN CONFORMS WITH APPLICABLE PROVISIONS OF NDS (NATIONAL DESIGN SPEC. BY AF&PA) AND TPI. ITW BCG CONNECTOR PLATES ARE MADE OF 20/18/16GA (W.H/SS/K) ASTM A653 GRADE 40/60 (W. K/H.SS) GALV. STEEL. APPLY PLATES TO EACH FACE OF TRUSS AND, UNLESS OTHERWISE LOCATED ON THIS DESIGN, POSITION PER DRAWINGS 160A-Z. ANY INSPECTION OF PLATES FOLLOWED BY (I) SHALL BE PER ANNEX A3 OF TPI1-2002 SEC.3. A SEAL ON THIS DRAWING INDICATES ACCEPTANCE OF PROFESSIONAL ENGINEERING RESPONSIBILITY SOLELY FOR THE TRUSS COMPONENT DESIGN SHOWN. THE SUITABILITY AND USE OF THIS COMPONENT FOR ANY BUILDING IS THE RESPONSIBILITY OF THE BUILDING DESIGNER PER ANSI/TPI 1 SEC. 2.

JAMES F. COLLINS JR. LICENSE No. 52212 STATE OF FLORIDA PROFESSIONAL ENGINEER
Aug 20, 2007

TC LL	20.0 PSF	REF	R215-- 21372
TC DL	10.0 PSF	DATE	08/20/07
BC DL	10.0 PSF	DRW	HCUSR215 07232044
BC LL	0.0 PSF	HC-ENG	RA/WHK
TOT.LD.	40.0 PSF	SEQN-	181974
DUR.FAC.	1.25	FROM	CDM
SPACING	24.0"	JREF-	1TA2215_Z06

Top chord 2x4 SP #2 N
Bot chord 2x4 SP #2 N
Webs 2x4 SP #2 N

Wind reactions based on MWFRS pressures.

In lieu of rigid ceiling use purlins to brace BC @ 24" OC.

The overall height of this truss excluding overhang is 1-3-7.

REFER TO DRAWING PIGBACKB0207 FOR PIGGYBACK DETAILS.
TOP CHORD OF SUPPORTING TRUSS UNDER PIGGYBACK TO
BE BRACED AT 24" O.C.

SEE DWGS A11015EE0207 FOR ADDITIONAL REQUIREMENTS.

110 mph wind, 20.65 ft mean hgt, ASCE 7-02, CLOSED bldg, Located anywhere in roof, CAT III OR IV, EXP C, wind TC DL=5.0 psf, wind BC DL=2.0 psf. Iw=1.15 GCpi(+/-)=0.18

Gable end supports 8" max rake overhang.

See DWG GBLLETIN0207 for more requirements.

Deflection meets L/240 live and L/180 total load.

THE BUILDING DESIGNER IS RESPONSIBLE FOR THE DESIGN OF THE ROOF AND CEILING DIAPHRAGMS, GABLE END SHEAR WALLS, AND SUPPORTING SHEAR WALLS. SHEAR WALLS MUST PROVIDE CONTINUOUS LATERAL RESTRAINT TO THE GABLE END. ALL CONNECTIONS TO BE DESIGNED BY THE BUILDING DESIGNER.

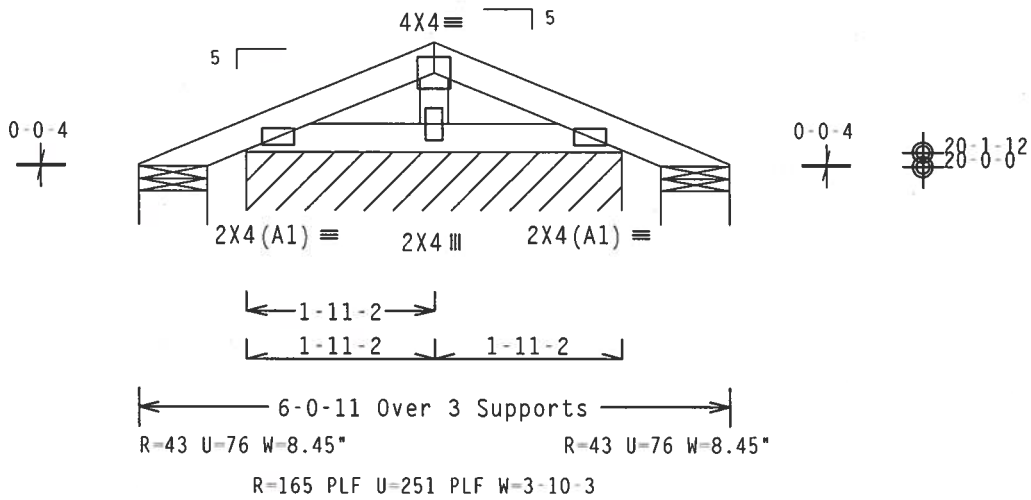

Design Crit: TPI-2002(STD)/FBC
Cq/RT=1.00(1.25)/10(0) 7.36.0424.10

PLT TYP. Wave QTY:1 FL/-/5/-/-/R/- Scale =.5"/Ft.

ALPINE
ITW Building Components Group, Inc.
Haines City, FL 33844
FL Certificate of Authorization # 567

WARNING TRUSSES REQUIRE EXTREME CARE IN FABRICATION, HANDLING, SHIPPING, INSTALLING AND BRACING. REFER TO BCSI (BUILDING COMPONENT SAFETY INFORMATION), PUBLISHED BY TPI (TRUSS PLATE INSTITUTE, 218 NORTH LEE STREET, SUITE 312, ALEXANDRIA, VA, 22314) AND WTCA (WOOD TRUSS COUNCIL OF AMERICA, 6300 ENTERPRISE LANE, MADISON, WI 53719) FOR SAFETY PRACTICES PRIOR TO PERFORMING THESE FUNCTIONS. UNLESS OTHERWISE INDICATED TOP CHORD SHALL HAVE PROPERLY ATTACHED STRUCTURAL PANELS AND BOTTOM CHORD SHALL HAVE A PROPERLY ATTACHED RIGID CEILING.

IMPORTANTFURNISH A COPY OF THIS DESIGN TO THE INSTALLATION CONTRACTOR. ITW BCG, INC. SHALL NOT BE RESPONSIBLE FOR ANY DEVIATION FROM THIS DESIGN; ANY FAILURE TO BUILD THE TRUSS IN COMFORMANCE WITH TPI; OR FABRICATING, HANDLING, SHIPPING, INSTALLING & BRACING OF TRUSSES.
DESIGN CONFORMS WITH APPLICABLE PROVISIONS OF NDS (NATIONAL DESIGN SPEC. BY AF&PA) AND TPI. ITW BCG CONNECTOR PLATES ARE MADE OF 20/18/16GA (W,H/SS/K) ASTM A653 GRADE 40/60 (W, K/H,SS) GALV. STEEL. APPLY PLATES TO EACH FACE OF TRUSS AND. UNLESS OTHERWISE LOCATED ON THIS DESIGN, POSITION PER DRAWINGS 160A-Z. ANY INSPECTION OF PLATES FOLLOWED BY (1) SHALL BE PER ANNEX A3 OF TPI1-2002 SEC.3. A SEAL ON THIS DRAWING INDICATES ACCEPTANCE OF PROFESSIONAL ENGINEERING RESPONSIBILITY SOLELY FOR THE TRUSS COMPONENT DESIGN SHOWN. THE SUITABILITY AND USE OF THIS COMPONENT FOR ANY BUILDING IS THE RESPONSIBILITY OF THE BUILDING DESIGNER PER ANSI/TPI 1 SEC. 2.

JAMES F. COLLINS JR. LICENSED No. 52212 STATE OF FLORIDA PROFESSIONAL ENGINEER
Aug 20, 2007

TC LL	20.0 PSF	REF	R215-- 21373
TC DL	10.0 PSF	DATE	08/20/07
BC DL	10.0 PSF	DRW	HCUSR215 07232045
BC LL	0.0 PSF	HC-ENG	RA/WHK
TOT.LD.	40.0 PSF	SEQN-	181967
DUR.FAC.	1.25	FROM	CDM
SPACING	24.0"	JREF-	1TA2215_Z06

THIS DWG PREPARED FROM COMPUTER INPUT (LOADS & DIMENSIONS) SUBMITTED BY TRUSS MFR.

Top chord 2x4 SP #2 N
Bot chord 2x4 SP #2 N
Webs 2x4 SP #2 N

Deflection meets L/240 live and L/180 total load.

REFER TO DRAWING PIGBACKB0207 FOR PIGGYBACK DETAILS.
TOP CHORD OF SUPPORTING TRUSS UNDER PIGGYBACK TO BE BRACED AT 24" O.C.

110 mph wind, 20.65 ft mean hgt, ASCE 7-02, CLOSED bldg, Located anywhere in roof, CAT III OR IV, EXP C, wind TC DL=5.0 psf, wind BC DL=2.0 psf. Iw=1.15 GCpi(+/-)=0.18

In lieu of rigid ceiling use purlins to brace BC @ 24" OC.

The overall height of this truss excluding overhang is 1-7-3.

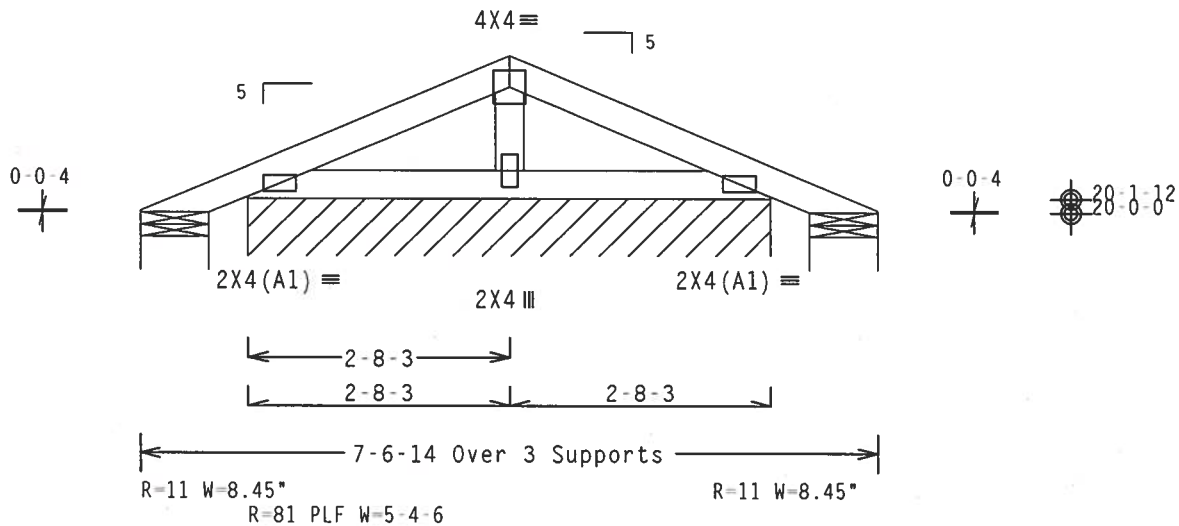

Design Crit: TPI-2002(STD)/FBC
Cq/RT=1.00(1.25)/10(0) 7.36.0424

PLT TYP. Wave

QTY:27 FL/-/5/-/-/R/-

Scale =.5"/Ft.

ALPINE
ITW Building Components Group, Inc.
Haines City, FL 33844
FL Certificate of Authorization # 567

WARNING TRUSSES REQUIRE EXTREME CARE IN FABRICATION, HANDLING, SHIPPING, INSTALLING AND BRACING. REFER TO BCSI (BUILDING COMPONENT SAFETY INFORMATION), PUBLISHED BY TPI (TRUSS PLATE INSTITUTE, 218 NORTH LEE STREET, SUITE 312, ALEXANDRIA, VA, 22314) AND WTCA (WOOD TRUSS COUNCIL OF AMERICA, 6300 ENTERPRISE LANE, MADISON, WI 53719) FOR SAFETY PRACTICES PRIOR TO PERFORMING THESE FUNCTIONS. UNLESS OTHERWISE INDICATED TOP CHORD SHALL HAVE PROPERLY ATTACHED STRUCTURAL PANELS AND BOTTOM CHORD SHALL HAVE A PROPERLY ATTACHED RIGID CEILING.

IMPORTANTFURNISH A COPY OF THIS DESIGN TO THE INSTALLATION CONTRACTOR. ITW BCG, INC. SHALL NOT BE RESPONSIBLE FOR ANY DEVIATION FROM THIS DESIGN; ANY FAILURE TO BUILD THE TRUSS IN CONFORMANCE WITH TPI; OR FABRICATING, HANDLING, SHIPPING, INSTALLING & BRACING OF TRUSSES.
DESIGN CONFORMS WITH APPLICABLE PROVISIONS OF NDS (NATIONAL DESIGN SPEC. BY AF&PA) AND TPI. ITW BCG CONNECTOR PLATES ARE MADE OF 20/18/16GA (W.H/SS/K) ASTM A653 GRADE 40/60 (W. K/H.SS) GALV. STEEL. APPLY PLATES TO EACH FACE OF TRUSS AND. UNLESS OTHERWISE LOCATED ON THIS DESIGN, POSITION PER DRAWINGS 160A-Z. ANY INSPECTION OF PLATES FOLLOWED BY (1) SHALL BE PER ANNEX A3 OF TPI1-2002 SEC.3. A SEAL ON THIS DRAWING INDICATES ACCEPTANCE OF PROFESSIONAL ENGINEERING RESPONSIBILITY SOLELY FOR THE TRUSS COMPONENT DESIGN SHOWN. THE SUITABILITY AND USE OF THIS COMPONENT FOR ANY BUILDING IS THE RESPONSIBILITY OF THE BUILDING DESIGNER PER ANSI/TPI 1 SEC. 2.

JAMES F. COLLINS JR. LICENSED No. 52212 STATE OF FLORIDA PROFESSIONAL ENGINEER
Aug 20 07

TC LL	20.0 PSF	REF	R215-- 21374
TC DL	10.0 PSF	DATE	08/20/07
BC DL	10.0 PSF	DRW	HCUSR215 07232046
BC LL	0.0 PSF	HC-ENG	RA/WHK
TOT.LD.	40.0 PSF	SEQN-	181970
DUR.FAC.	1.25	FROM	CDM
SPACING	24.0"	JREF-	1TA2215_Z06

CLB WEB BRACE SUBSTITUTION

THIS DETAIL IS TO BE USED WHEN CONTINUOUS LATERAL BRACING (CLB) IS SPECIFIED ON AN ALPINE TRUSS DESIGN BUT AN ALTERNATIVE WEB BRACING METHOD IS DESIRED.

NOTES:

THIS DETAIL IS ONLY APPLICABLE FOR CHANGING THE SPECIFIED CLB SHOWN ON SINGLE PLY SEALED DESIGNS TO T-BRACING OR SCAB BRACING.

ALTERNATIVE BRACING SPECIFIED IN CHART BELOW MAY BE CONSERVATIVE. FOR MINIMUM ALTERNATIVE BRACING, RE-RUN DESIGN WITH APPROPRIATE BRACING.

WEB MEMBER SIZE	SPECIFIED CLB BRACING	ALTERNATIVE BRACING T OR L-BRACE	ALTERNATIVE BRACING SCAB BRACE
2X3 OR 2X4	1 ROW	2X4	1-2X4
2X3 OR 2X4	2 ROWS	2X6	2-2X4
2X6	1 ROW	2X4	1-2X6
2X6	2 ROWS	2X6	2-2X4(*)
2X8	1 ROW	2X6	1-2X8
2X8	2 ROWS	2X6	2-2X6(*)

T-BRACE, L-BRACE AND SCAB BRACE TO BE SAME SPECIES AND GRADE OR BETTER THAN WEB MEMBER UNLESS SPECIFIED OTHERWISE ON ENGINEER'S SEALED DESIGN.

(*) CENTER SCAB ON WIDE FACE OF WEB. APPLY (1) SCAB TO EACH FACE OF WEB.

T-BRACING OR L-BRACING:

APPLY TO EITHER SIDE OF WEB NARROW FACE. ATTACH WITH 10d BOX OR GUN (0.128"x 3.",MIN) NAILS. AT 6" O.C. BRACE IS A MINIMUM 80% OF WEB MEMBER LENGTH

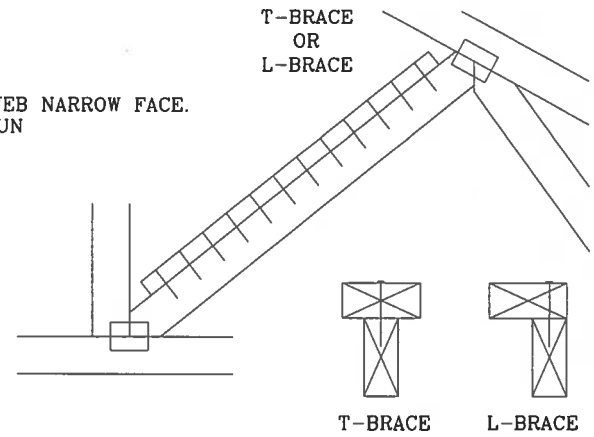

SCAB BRACING:

APPLY SCAB(S) TO WIDE FACE OF WEB. NO MORE THAN (1) SCAB PER FACE. ATTACH WITH 10d BOX OR GUN (0.128"x 3.",MIN) NAILS. AT 6" O.C. BRACE IS A MINIMUM 80% OF WEB MEMBER LENGTH

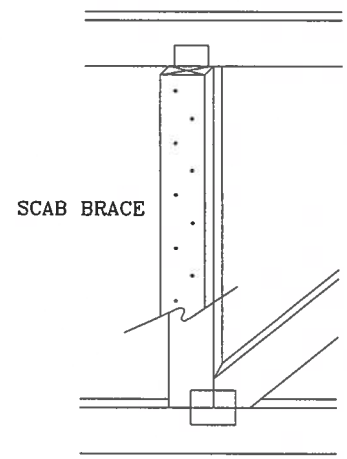

THIS DRAWING REPLACES DRAWING 579,640

ALPINE
ITW BUILDING COMPONENTS GROUP, INC.
POMPANO BEACH, FLORIDA

WARNING TRUSSES REQUIRE EXTREME CARE IN FABRICATING, HANDLING, SHIPPING, INSTALLING AND BRACING. REFER TO BCSI (BUILDING COMPONENT SAFETY INFORMATION), PUBLISHED BY TPI (TRUSS PLATE INSTITUTE, 218 NORTH LEE STR., SUITE 312, ALEXANDRIA, VA. 22314) AND WTCA (WOOD TRUSS COUNCIL OF AMERICA, 6300 ENTERPRISE LN, MADISON, WI 53719) FOR SAFETY PRACTICES PRIOR TO PERFORMING THESE FUNCTIONS. UNLESS OTHERWISE INDICATED, TOP CHORD SHALL HAVE PROPERLY ATTACHED STRUCTURAL PANELS AND BOTTOM CHORD SHALL HAVE A PROPERLY ATTACHED RIGID CEILING.

IMPORTANT FURNISH COPY OF THIS DESIGN TO INSTALLATION CONTRACTOR. ITW BCG, INC., SHALL NOT BE RESPONSIBLE FOR ANY DEVIATION FROM THIS DESIGN; ANY FAILURE TO BUILD THE TRUSS IN CONFORMANCE WITH TPI; OR FABRICATING, HANDLING, SHIPPING, INSTALLING & BRACING OF TRUSSES. DESIGN CONFORMS WITH APPLICABLE PROVISIONS OF NDS (NATIONAL DESIGN SPEC, BY AF&PA) AND TPI. ITW, BCG CONNECTOR PLATES ARE MADE OF 20/18/16GA (W,H/SS/K) ASTM A653 GRADE 40/60 (W,K/H,SS) GALV. STEEL. APPLY PLATES TO EACH FACE OF TRUSS AND, UNLESS OTHERWISE LOCATED ON THIS DESIGN, POSITION PER DRAWINGS 160A-Z. ANY INSPECTION OF PLATES FOLLOWED BY (I) SHALL BE PER ANNEX A3 OF TPI 1-2002 SEC. 3. A SEAL ON THIS DRAWING INDICATES ACCEPTANCE OF PROFESSIONAL ENGINEERING RESPONSIBILITY SOLELY FOR THE TRUSS COMPONENT DESIGN SHOWN. THE SUITABILITY AND USE OF THIS COMPONENT FOR ANY BUILDING IS THE RESPONSIBILITY OF THE BUILDING DESIGNER, PER ANSI/TPI 1 SEC. 2.

JAMES F. COLLINS JR. LICENSE No. 52212 STATE OF FLORIDA PROFESSIONAL ENGINEER

TC LL	PSF	REF	CLB SUBST.
TC DL	PSF	DATE	2/23/07
BC DL	PSF	DRWG	BRCLBSUB0207
BC LL	PSF	-ENG	MLH/KAR
TOT. LD.	PSF		
DUR. FAC.			
SPACING			

GABLE DETAIL
FOR LET-IN VERTICALS

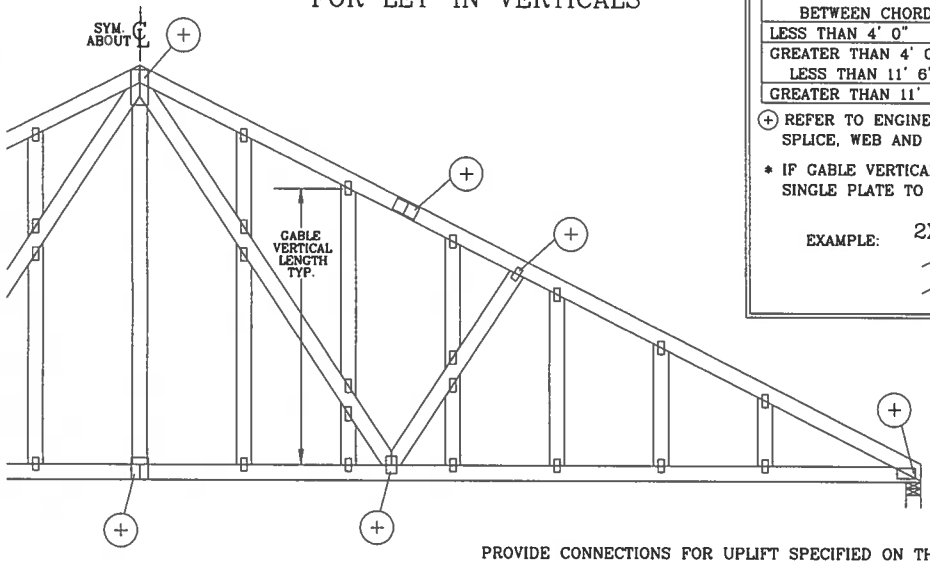

GABLE VERTICAL PLATE SIZES		
VERTICAL LENGTH BETWEEN CHORDS	PLATE SIZE	IF PLATES OVERLAP*
LESS THAN 4' 0"	1X4 OR 2X3	2X8
GREATER THAN 4' 0", BUT LESS THAN 11' 6"	2X4	2X8
GREATER THAN 11' 6"	2.5X4	2.5X8

(+) REFER TO ENGINEERED TRUSS DESIGN FOR PEAK, SPLICE, WEB AND HEEL PLATES.

* IF GABLE VERTICAL PLATES OVERLAP, USE A SINGLE PLATE TO SPAN THE WEB.

EXAMPLE:

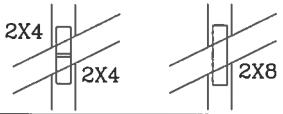

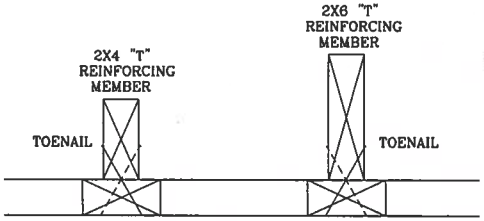

TO CONVERT FROM "L" TO "T" REINFORCING MEMBERS, MULTIPLY "T" FACTOR BY LENGTH (BASED ON GABLE VERTICAL SPECIES, GRADE AND SPACING) FOR (1) 2X4 "L" BRACE, GROUP A, OBTAINED FROM THE APPROPRIATE ALPINE GABLE DETAIL FOR ASCE OR SBCCI WIND LOAD.

MAXIMUM ALLOWABLE "T" REINFORCED GABLE VERTICAL LENGTH IS 14' FROM TOP TO BOTTOM CHORD.

WEB LENGTH INCREASE W/ "T" BRACE

WIND SPEED AND MRH	"T" REINF. MBR. SIZE	SBCCI	ASCE
110 MPH	2x4	10 %	10 %
15 FT	2x6	40 %	50 %
110 MPH	2x4	10 %	10 %
30 FT	2x6	50 %	50 %
100 MPH	2x4	10 %	10 %
15 FT	2x6	30 %	50 %
100 MPH	2x4	10 %	10 %
30 FT	2x6	40 %	40 %
90 MPH	2x4	20 %	10 %
15 FT	2x6	20 %	40 %
90 MPH	2x4	10 %	10 %
30 FT	2x6	30 %	50 %
80 MPH	2x4	10 %	20 %
15 FT	2x6	10 %	30 %
80 MPH	2x4	20 %	10 %
30 FT	2x6	20 %	40 %
70 MPH	2x4	0 %	20 %
15 FT	2x6	0 %	20 %
70 MPH	2x4	10 %	20 %
30 FT	2x6	10 %	30 %

EXAMPLE:
ASCE WIND SPEED = 100 MPH
MEAN ROOF HEIGHT = 30 FT
GABLE VERTICAL = 24" O.C. SP #3
"T" REINFORCING MEMBER SIZE = 2X4
"T" BRACE INCREASE (FROM ABOVE) = 10% = 1.10
(1) 2X4 "L" BRACE LENGTH = 6' 7"
MAXIMUM "T" REINFORCED GABLE VERTICAL LENGTH
1.10 x 6' 7" = 7' 3"

PROVIDE CONNECTIONS FOR UPLIFT SPECIFIED ON THE ENGINEERED TRUSS DESIGN.

ATTACH EACH "T" REINFORCING MEMBER WITH
HAND DRIVEN NAILS:
10d COMMON (0.148"X 3.",MIN) TOENAILS AT 4" O.C. PLUS
(4) 16d COMMON (0.162" X 3.5",MIN) TOENAILS IN TOP AND BOTTOM CHORD.

GUN DRIVEN NAILS:
8d COMMON (0.131"X 2.5",MIN) TOENAILS AT 4" O.C. PLUS
(4) TOENAILS IN TOP AND BOTTOM CHORD.

THIS DETAIL TO BE USED WITH THE APPROPRIATE ALPINE GABLE DETAIL FOR ASCE OR SBCCI WIND LOAD.

ASCE 7-93 GABLE DETAIL DRAWINGS
A11015EN0207, A10015EN0207, A09015EN0207, A08015EN0207, A07015EN0207, A11030EN0207, A10030EN0207, A09030EN0207, A08030EN0207, A07030EN0207

ASCE 7-98 GABLE DETAIL DRAWINGS
A13015EC0207, A12015EC0207, A11015EC0207, A10015EC0207, A08515EC0207, A13030EC0207, A12030EC0207, A11030EC0207, A10030EC0207, A08530EC0207

ASCE 7-02 GABLE DETAIL DRAWINGS
A13015EE0207, A12015EE0207, A11015EE0207, A10015EE0207, A08515EE0207, A13030EE0207, A12030EE0207, A11030EE0207, A10030EE0207, A08530EE0207

ASCE 7-05 GABLE DETAIL DRAWINGS
A13015E50207, A12015E50207, A11015E50207, A10015E50207, A08515E50207, A13030E50207, A12030E50207, A11030E50207, A10030E50207, A08530E50207

SEE APPROPRIATE ALPINE GABLE DETAIL (ASCE OR SBCCI WIND LOAD) FOR MAXIMUM UNREINFORCED GABLE VERTICAL LENGTH.

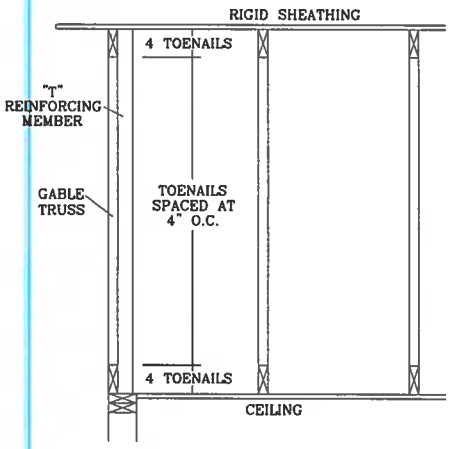

THIS DRAWING REPLACES DRAWINGS GAB98117 876,719 & HC26294035

ALPINE
ITW BUILDING COMPONENTS GROUP, INC.
POMPANO BEACH, FLORIDA

WARNING TRUSSES REQUIRE EXTREME CARE IN FABRICATING, HANDLING, SHIPPING, INSTALLING AND BRACING. REFER TO BCSI (BUILDING COMPONENT SAFETY INFORMATION), PUBLISHED BY TPI (TRUSS PLATE INSTITUTE, 218 NORTH LEE STR., SUITE 312, ALEXANDRIA, VA. 22314) AND WTCA (WOOD TRUSS COUNCIL OF AMERICA, 6300 ENTERPRISE LN, MADISON, WI 53719) FOR SAFETY PRACTICES PRIOR TO PERFORMING THESE FUNCTIONS. UNLESS OTHERWISE INDICATED, TOP CHORD SHALL HAVE PROPERLY ATTACHED STRUCTURAL PANELS AND BOTTOM CHORD SHALL HAVE A PROPERLY ATTACHED RIGID CEILING.

IMPORTANT FURNISH COPY OF THIS DESIGN TO INSTALLATION CONTRACTOR. ITW BCG, INC., SHALL NOT BE RESPONSIBLE FOR ANY DEVIATION FROM THIS DESIGN; ANY FAILURE TO BUILD THE TRUSS IN CONFORMANCE WITH TPI; OR FABRICATING, HANDLING, SHIPPING, INSTALLING & BRACING OF TRUSSES. DESIGN CONFORMS WITH APPLICABLE PROVISIONS OF NDS (NATIONAL DESIGN SPEC, BY AF&PA) AND TPI. ITW, BCG CONNECTOR PLATES ARE MADE OF 20/18/16GA (W,H/SS/K) ASTM A653 GRADE 40/60 (W/K/H,SS) GALV. STEEL. APPLY PLATES TO EACH FACE OF TRUSS AND, UNLESS OTHERWISE LOCATED ON THE DESIGN, POSITION PER DRAWINGS 160A-Z. ANY INSPECTION OF PLATES FOLLOWED BY (!) SHALL BE PER ANNEX A3 OF TPI 1-2002 SEC. 3. A SEAL ON THIS DRAWING INDICATES ACCEPTANCE OF PROFESSIONAL ENGINEERING RESPONSIBILITY SOLELY FOR THE TRUSS COMPONENT DESIGN SHOWN. THE SUITABILITY AND USE OF THIS COMPONENT FOR ANY BUILDING IS THE RESPONSIBILITY OF THE BUILDING DESIGNER, PER ANSI/TPI 1 SEC. 2.

JAMES F. COLLINS, JR. LICENSE No. 52212 STATE OF FLORIDA PROFESSIONAL ENGINEER
20 '07

MAX TOT. LD. 60 PSF
DUR. FAC. ANY
MAX SPACING 24.0"

REF	LET-IN VERT
DATE	2/23/07
DRWG	GBLLETIN0207
-ENG	DLJ/KAR

MIAMI-DADE

BUILDING CODE COMPLIANCE OFFICE (BCCO)
PRODUCT CONTROL DIVISION

MIAMI-DADE COUNTY, FLORIDA
METRO-DADE FLAGLER BUILDING
140 WEST FLAGLER STREET, SUITE 1603
MIAMI, FLORIDA 33130-1563
(305) 375-2901 FAX (305) 375-2908

NOTICE OF ACCEPTANCE (NOA)

Therma-Tru Corporation
108 Mutzfeld Rd.
Butler, IN 46721

SCOPE:

This NOA is being issued under the applicable rules and regulations governing the use of construction materials. The documentation submitted has been reviewed by Miami-Dade County Product Control Division and accepted by the Board of Rules and Appeals (BORA) to be used in Miami Dade County and other areas where allowed by the Authority Having Jurisdiction (AHJ).

This NOA shall not be valid after the expiration date stated below. The Miami-Dade County Product Control Division (In Miami Dade County) and/or the AHJ (in areas other than Miami Dade County) reserve the right to have this product or material tested for quality assurance purposes. If this product or material fails to perform in the accepted manner, the manufacturer will incur the expense of such testing and the AHJ may immediately revoke, modify, or suspend the use of such product or material within their jurisdiction. BORA reserves the right to revoke this acceptance, if it is determined by Miami-Dade County Product Control Division that this product or material fails to meet the requirements of the applicable building code.

This product is approved as described herein, and has been designed to comply with the High Velocity Hurricane Zone of the Florida Building Code.

DESCRIPTION: Premium Series 6'8 Opaque Steel Door w & wo sidelites (OS)

APPROVAL DOCUMENT: Drawing No. S-2149, titled ""Premium Series" 6-8 Single & Double Out-swing Steel Door", sheets 1 through 8, prepared by RW Building Consultants, Inc., dated 3/28/02, bearing the Miami-Dade County Product Control Approval stamp with the Notice of Acceptance number and approval date by the Miami-Dade County Product Control Division.

MISSILE IMPACT RATING: Large and Small Missile Impact and Non-Impact

LABELING: Each unit shall bear a permanent label with the manufacturer's name or logo, city, state and following statement: "Miami-Dade County Product Control Approved", unless otherwise noted herein.

RENEWAL of this NOA shall be considered after a renewal application has been filed and there has been no change in the applicable building code negatively affecting the performance of this product.

TERMINATION of this NOA will occur after the expiration date or if there has been a revision or change in the materials, use, and/or manufacture of the product or process. Misuse of this NOA as an endorsement of any product, for sales, advertising or any other purposes shall automatically terminate this NOA. Failure to comply with any section of this NOA shall be cause for termination and removal of NOA.

ADVERTISEMENT: The NOA number preceded by the words Miami-Dade County, Florida, and followed by the expiration date may be displayed in advertising literature. If any portion of the NOA is displayed, then it shall be done in its entirety.

INSPECTION: A copy of this entire NOA shall be provided to the user by the manufacturer or its distributors and shall be available for inspection at the job site at the request of the Building Official.

The submitted documentation was reviewed by **Raul Rodriguez**

PRODUCT CONTROL ACCEPTED

THERMA-TRU®

"PREMIUM SERIES" OUTSWING 6-8 SINGLE AND DOUBLE W/& W/OUT SIDELITES. INSULATED STEEL DOOR WITH WOOD FRAMES.

GENERAL NOTES

1. THIS PRODUCT IS DESIGNED TO MEET THE SOUTH FLORIDA BUILDING CODE 1994 EDITION FOR MIAMI-DADE COUNTY.
2. WOOD BUCKS BY OTHERS, MUST BE ANCHORED PROPERLY TO TRANSFER LOADS TO THE STRUCTURE.
3. PRODUCT ANCHORS SHALL BE AS LISTED AND SPACED AS SHOWN ON DETAILS. ANCHOR EMBEDMENT TO BASE MATERIAL SHALL BE BEYOND WALL DRESSING OR STUCCO.
4. DESIGNED PRESSURE RATING SEE TABLE PAGE 1.
5. MIAMI-DADE APPROVED IMPACT RESISTANT SHUTERS ARE REQUIRED FORE SIDELITES ONLY.
6. SIDELIES ARE AN OPTION AND CAN BE USED IN A SINGLE OR DOUBLE CONFIGURATION.
7. LOW PROFILE OUTSWING BUMP THRESHOLD RATED FOR +55.0 PSF & -55.0 PSF ON WATER FOR SINGLEUNITS.

INSULATED STEEL DOOR
(Common to all frame conditions)

Door & Sidelite Panel Construction:

Face sheets: 24 GA.(0.022")minimum thickness, Galvanized steel A-525 commercial quality - AKDQ per ASTM 620 with yield strength Fy(min.)=38,438 psi

Core design: Polyurethane foam core, with1.9 lbs. density by BASF.

Door Panel Construction: Flush or embossed type. The vertical edges of the skin, rolled formed to provide a mechanical interlock with finger jointed pine stiles. Wood end rails are butt jointed and pressure fitted with contact cement to the wood stiles at the corners.

Sidelite Panel Construction and Glazing: The vertical edges of the skin are rolled formed to provide a mechanical interlock with finger jointed pine stiles. Wood end rails are butt jointed to the wood stiles at the corners. The sidelite panels are sandwich glazed using a two piece lite frame.

Frame Construction: The frame is constructed from finger jointed Ponderosa Pine measuring 4.656" wide x 1.25" thick. The header is joined to the side jambs with (3) 16ga. 1/2" crown x 2" long staples at each side. The threshold is joined to the side jambs with (2) 16ga. 1/2" crown x 2.5" long staples at each side. The mullions are secured together in a sidelite application using #8 x 2 1/2" long PFH Wood Screws (6) screws per each mullion. The unit uses an Outswing Bumpface threshold, either Low Profile or High Water Dam.

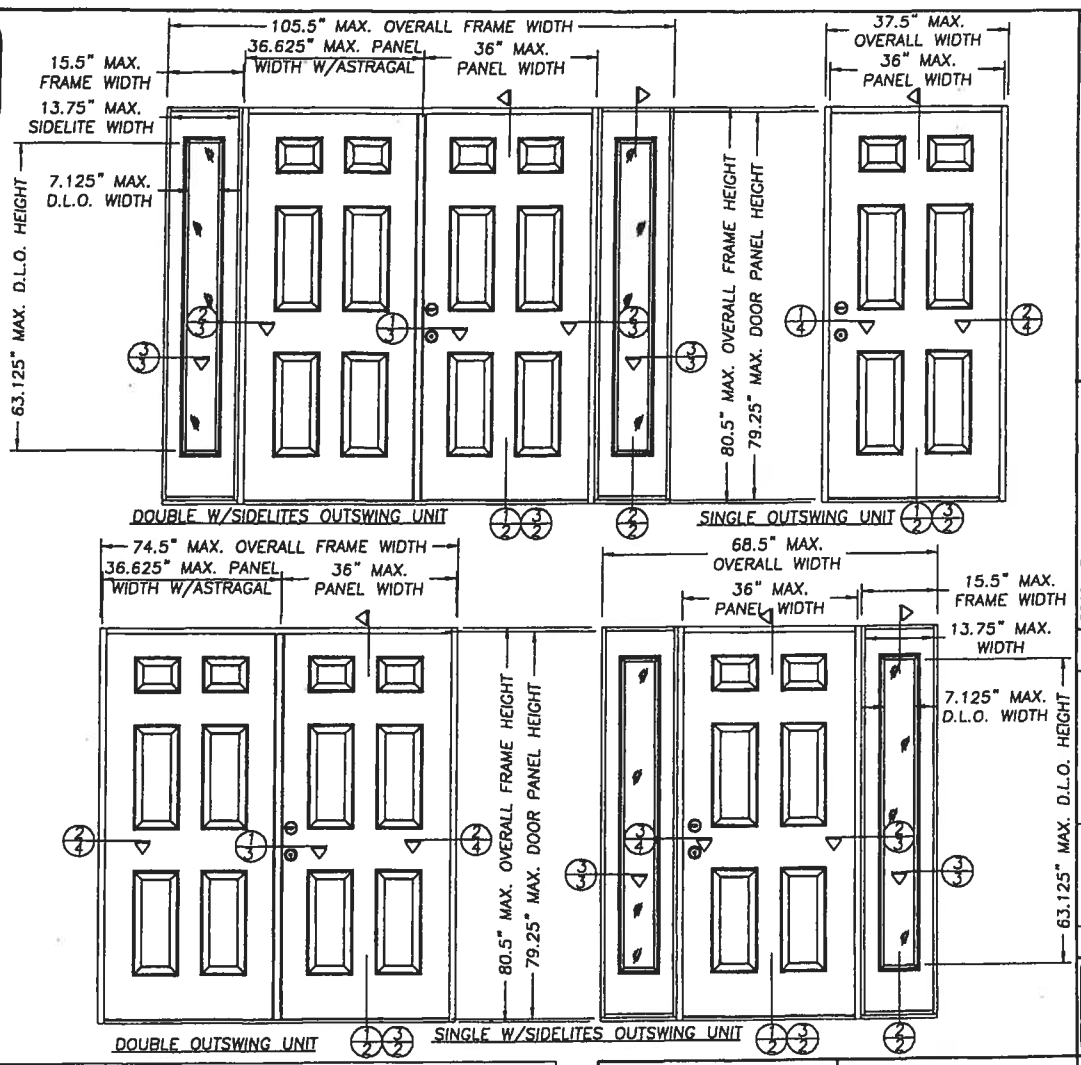

TABLE OF CONTENTS

SHEET #	DESCRIPTION
1	TYPICAL ELEVATIONS & GENERAL NOTES
2	VERTICAL CROSS SECTIONS
3	HORIZONTAL CROSS SECTIONS
4	HORIZONTAL CROSS SECTIONS & NOTES
5	ANCHORING LOCATIONS & DETAILS
6	ANCHORING LOCATIONS & GLAZING DETAILS
7	UNIT COMPONENTS
8	BILL OF MATERIALS & UNIT COMPONENTS

DESIGN PRESSURE RATING

UNIT TYPE	W/LOW PROFILE BUMP THRESHOLD	W/HIGH DAM BUMP THRESHOLD
SINGLE	+ 55.0 PSF - 67.0 PSF	+ 75.0 PSF - 75.0 PSF
DOUBLE	NOT APPROVED FOR WATER	+ 65.0 PSF - 65.0 PSF
SINGLE W/SIDELITES	+ 55.0 PSF - 67.0 PSF	+ 65.0 PSF - 65.0 PSF
DOUBLE W/SIDELITES	NOT APPROVED FOR WATER	+ 65.0 PSF - 65.0 PSF

Approved as complying with the Florida Building Code
Date June 20, 2002
NOA# 01-0824.06
Miami Dade Product Control Division
By

THERMATRU®
108 MUTZFELD Rd.
BUTLER, IN 46721
PH. (219) 868-5811

PRODUCT: "PREMIUM SERIES" 6-8 SINGLE & DOUBLE OUT-SWING STEEL DOOR

PART OR ASSEMBLY: TYPICAL ELEVATIONS & GENERAL NOTES

NO.	DATE	REVISIONS	BY
1	3/28/02	GENERAL REVISION	WLN

RW BUILDING CONSULTANTS, INC.
813.684.3831

DATE: 08/08/01
SCALE: N.T.S.
DWG. BY: TJH
CHK. BY: RW
DRAWING NO.: S-2149
SHEET 1 OF 8

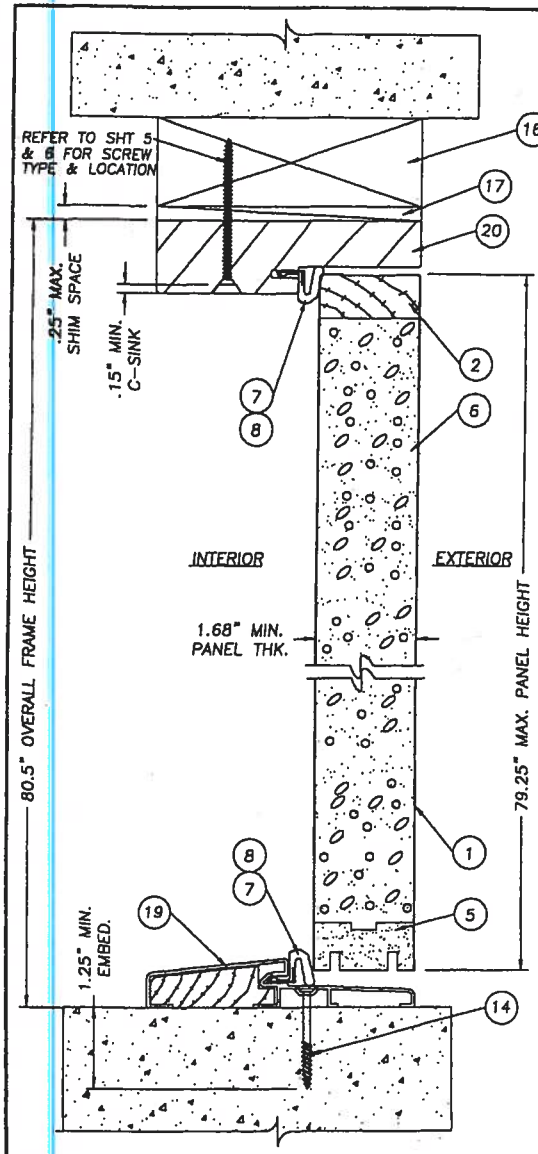

1/2 VERTICAL CROSS SECTION
DOOR PANEL W/ LOW PROFILE BUMP THRESHOLD

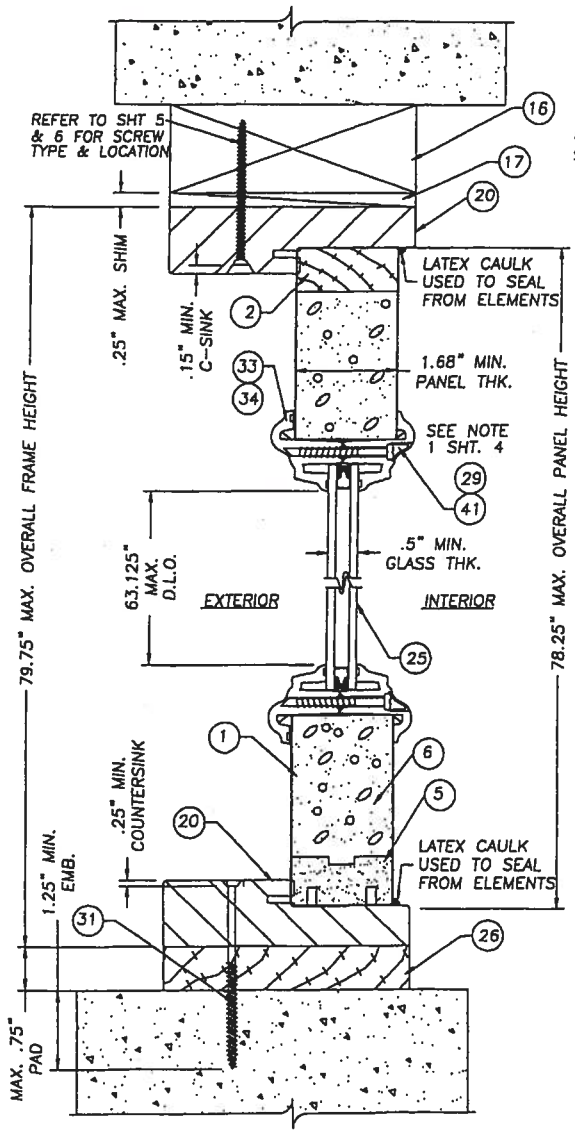

2/2 VERTICAL CROSS SECTION
SIDELITE PANEL

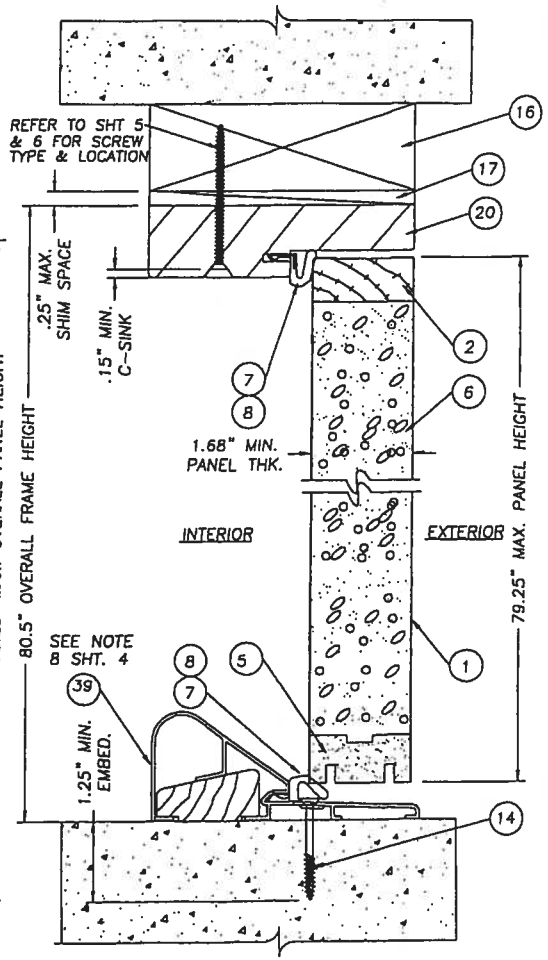

3/2 VERTICAL CROSS SECTION
DOOR PANEL W/ HIGH DAM THRESHOLD

Approved as complying with the Florida Building Code
Date June 20, 2002
NOA# 01-0824.06
Miami Dade Product Control Division
By

THERMA TRU®
108 MUTZFELD Rd.
BUTLER, IN 46721
PH. (219) 868-5811

PRODUCT: "PREMIUM SERIES" 6-8 SINGLE & DOUBLE OUT-SWING STEEL DOOR
PART OR ASSEMBLY: VERTICAL CROSS SECTIONS

NO.	DATE	REVISIONS	BY
1	3/28/02	GENERAL REVISION	WLN

RW BUILDING CONSULTANTS, INC.
813.684.3831

DATE: 08/08/01
SCALE: 1/2" = 1"
DWG. BY: TJH
CHK. BY: RW
DRAWING NO.: S-2149
SHEET 2 OF 8

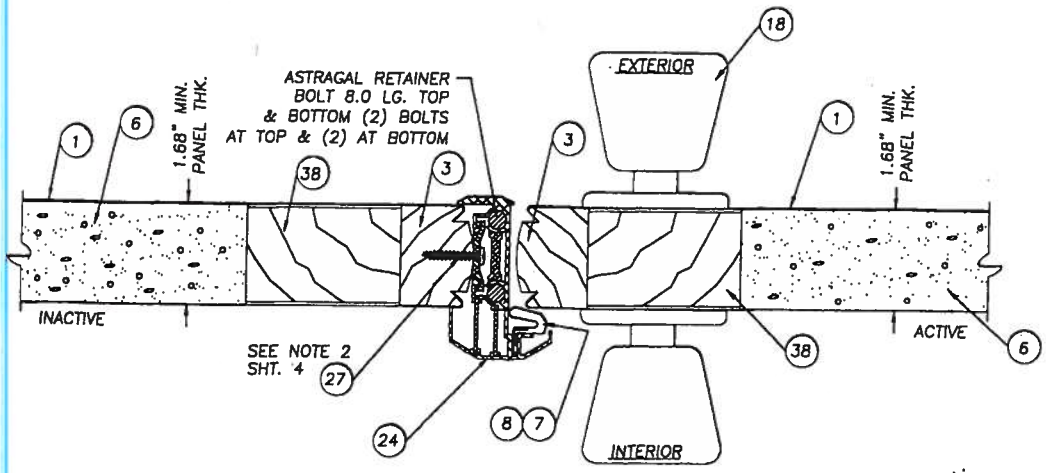

1/3 HORIZONTAL CROSS SECTION @ ASTRAGAL

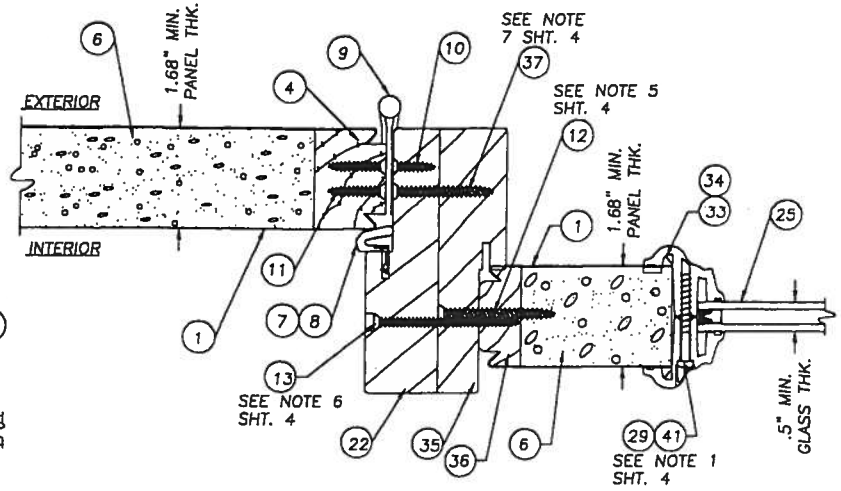

2/3 HORIZONTAL CROSS SECTION @ HINGE JAMB TO SIDELITE

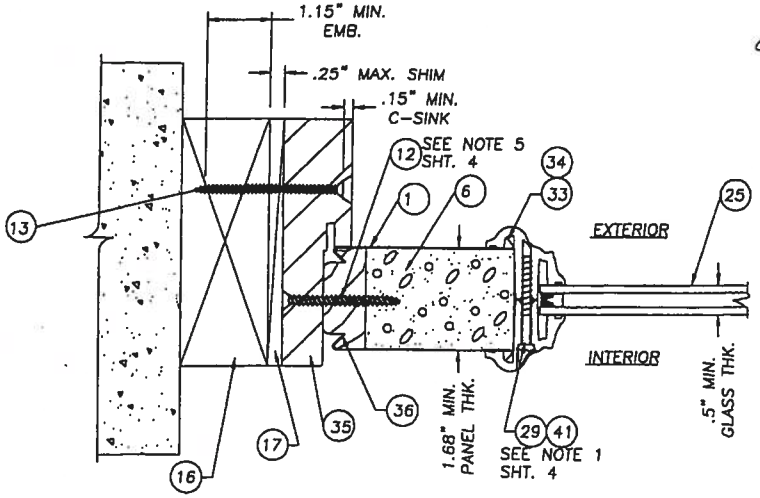

3/3 HORIZONTAL CROSS SECTION @ SIDELITE TO BUCK

Approved as complying with the Florida Building Code
Date June 20, 2002
NOA# 01-0118.04
Miami Dade Product Control Division
By

THERMATRU®
108 MUTZFELD Rd.
BUTLER, IN 46721
PH. (219) 868-5811

PRODUCT: "PREMIUM SERIES" 6-8 SINGLE & DOUBLE OUT-SWING STEEL DOOR

PART OR ASSEMBLY: HORIZONTAL CROSS SECTIONS

NO.	DATE	GENERAL REVISION	WLN	BY
1	3/28/02			

REVISIONS

RW BUILDING CONSULTANTS, INC.
813.684.3831

DATE: 08/08/01
SCALE: 1/2" = 1"
DWG. BY: TJH
CHK. BY: RW
DRAWING NO.: S-2149
SHEET 3 OF 8

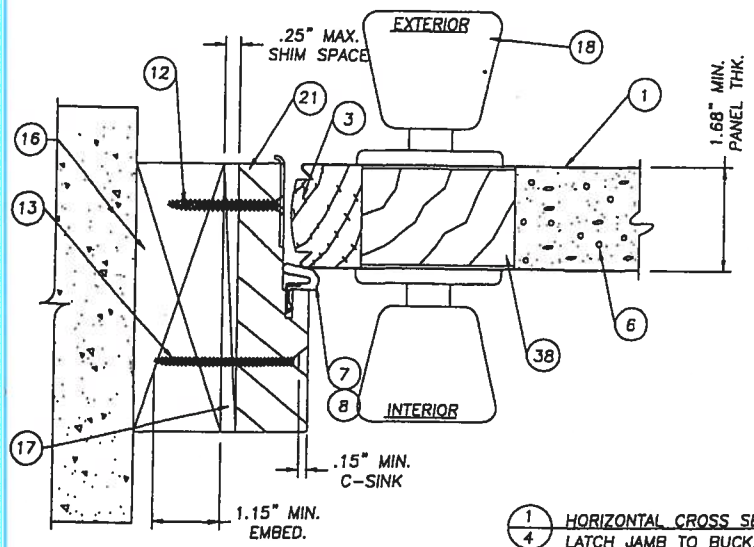

1/4 HORIZONTAL CROSS SECTION
LATCH JAMB TO BUCK,

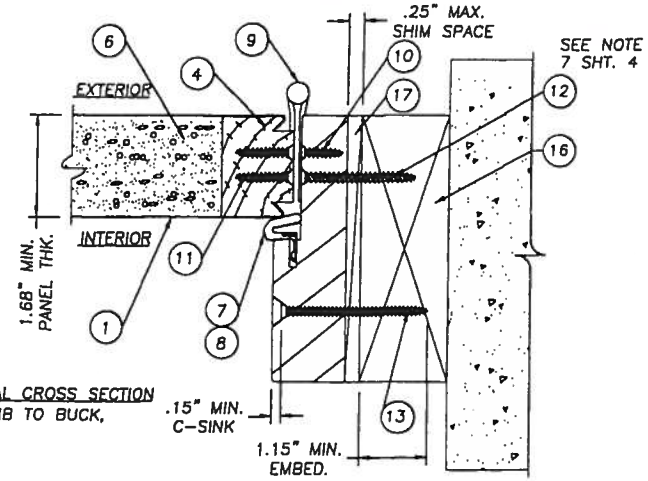

2/4 HORIZONTAL CROSS SECTION
HINGE JAMB TO BUCK,

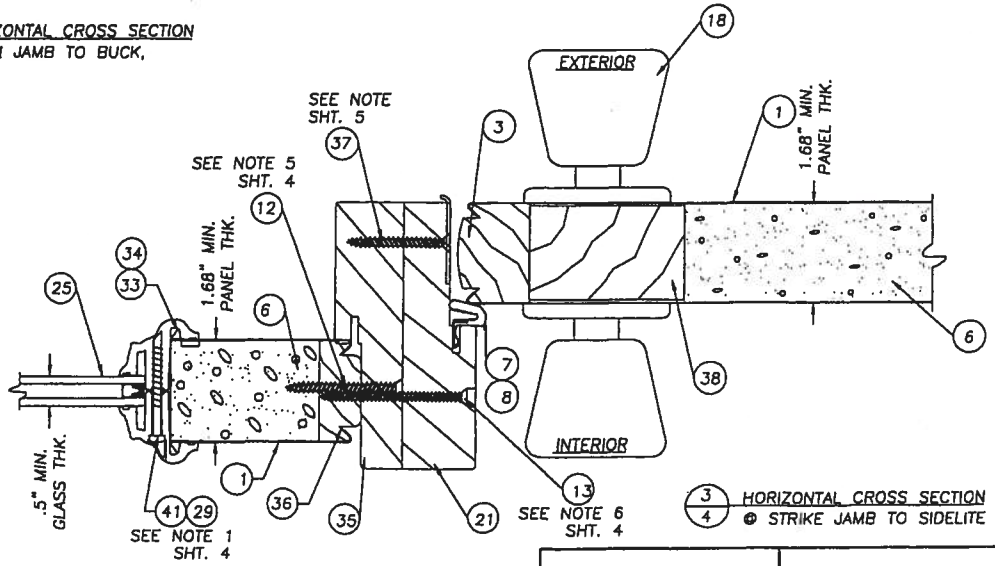

3/4 HORIZONTAL CROSS SECTION
@ STRIKE JAMB TO SIDELITE

NOTES:

1. SPACING FOR ITEM #29 & #41 (LITE FRAME SCREWS) IS AS FOLLOWS: FROM THE TOP DOWN ON SIDES; 3", 14.75", 26.5", 38.25", 50.5" & 62.25". THERE IS (1) SCREW BOTH TOP AND BOTTOM AT 4.25" IN FROM CORNER.
2. SPACING FOR ITEM #27 #8 x 1" PANHEAD SCREW ATTACHING THE ASTRAGAL TO THE INACTIVE DOOR IS AS FOLLOWS: FROM THE BOTTOM UP AND TOP DOWN 1", 3", 5", 26" AND (1) MORE 6" UP FROM THE STRIKE LOCATION.
3. THE HEAD JAMB IS ATTACHED TO THE SIDE JAMBS WITH (3) 16GA. x 1/2" CROWN x 2" STAPLES AT BOTH SIDE.
4. THE THRESHOLD IS ATTACHED TO THE SIDE JAMBS WITH (2) 16GA. x 1/2" CROWN x 2.5" STAPLES AT BOTH SIDE.
5. THE SIDELITE IS DIRECT SET INTO THE JAMB WITH ITEM #12 #10 x 2" PH.F.H. WOOD SCREW AT 6" DOWN FROM EACH CORNER AND A MAX. OF 12" O.C. ON THE SIDE JAMBS ONLY.
6. SPACING FOR ITEM #13, A #8 x 2 1/2" SCREW SECURING THE MULLIONS TOGETHER IS THE SAME AS THE PERIMETER ANCHORING SCREWS. 6" DOWN FROM THE TOP AND UP FROM THE BOTTOM WITH (4) MORE SPACED AT 13.7" O.C.
7. WHEN ATTACHING THE HINGE TO THE JAMB AND THE BUCK USE ITEM #12 A #10 x 2" SCREW. WHEN ATTACHING THE HINGE TO THE JAMB AND THE SIDELITE AT THE MULLION USE ITEM #37 A #10 x 1 3/4" SCREW.
8. ITEM #39, THE HIGH DAM THRESHOLD IS ONLY USED IN AN APPLICATION WHERE A HIGHER WATER PRESSURE MUST BE ACHIEVED.

Approved as complying with the Florida Building Code
Date June 10, 2002
NOA# 01-0828.09
Miami Dade Product Control Division
By

THERMATRU®
108 MUTZFELD Rd.
BUTLER, IN 46721
PH. (219) 868-5811

PRODUCT: "PREMIUM SERIES" 6-8 SINGLE & DOUBLE OUT-SWING STEEL DOOR

PART OR ASSEMBLY: HORIZONTAL CROSS SECTIONS & NOTES

NO.	DATE	GENERAL REVISION	BY
1	3/28/02	WLN	

REVISIONS

RW BUILDING CONSULTANTS, INC.
813.684.3831

DATE: 08/08/01
SCALE: 1/2" = 1"
DWG. BY: TJH
CHK. BY: RW
DRAWING NO.: S-2149
SHEET 4 OF 8

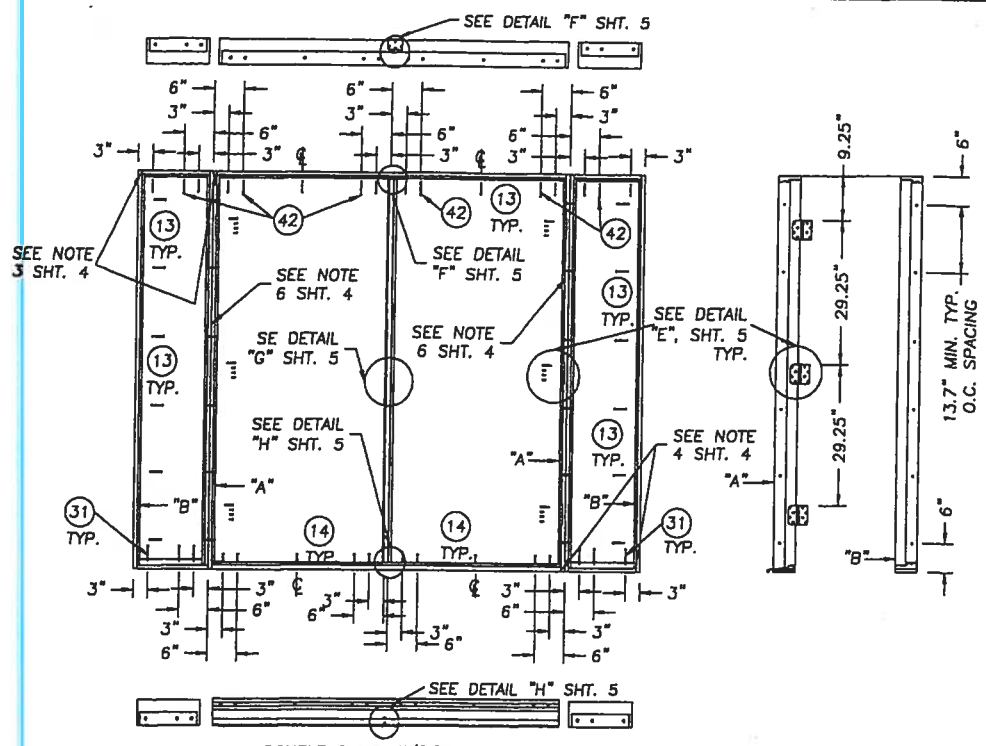

DOUBLE DOOR W/SIDELITES

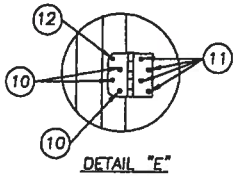

DETAIL "E"

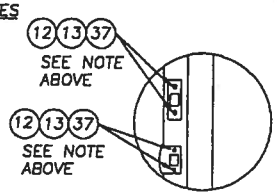

DETAIL "G"

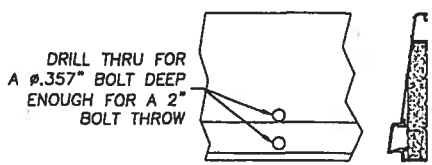

DETAIL "H"
ASTRAGAL THROW BOLTS AT THE THRESHOLD

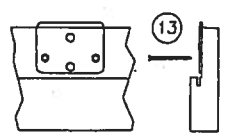

DETAIL "F"
ATTACH ASTRAGAL THROW BOLT STRIKE PLATE TO FRAME AS SHOWN.

NOTE:
WHEN ATTACHING THE STRIKE & DEADBOLT PLATES TO THE STRIKE JAMB AND BUCK USE A #10 x 2" SCREW. WHEN ATTACHING THE STRIKE & DEADBOLT PLATES TO THE ASTRAGAL USE A #8 x 2 1/2' SCREW. WHEN ATTACHING THE STRIKE & DEADBOLT PLATES TO THE STRIKE JAMB AND SIDELITE JAMB USE A #10 x 1 3/4" SCREW.

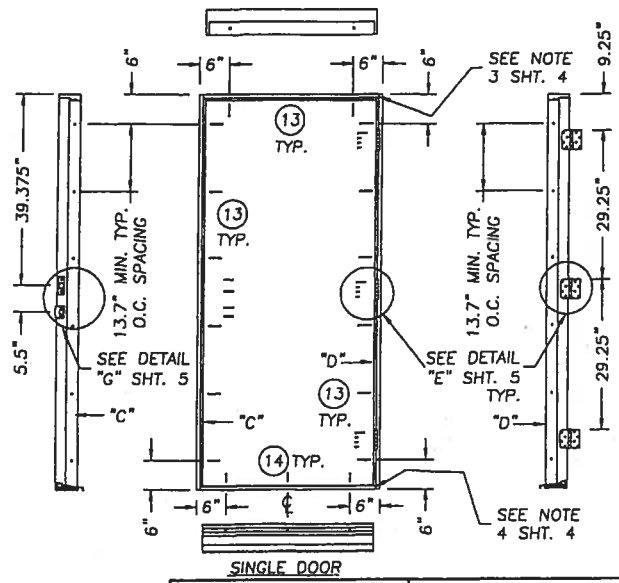

SINGLE DOOR

Approved as complying with the Florida Buiding Code
Date June 20, 2002
NOA# 01-0528.08
Miami Dade Product Control Division
By

THERMA TRU®
108 MUTZFELD Rd.
BUTLER, IN 46721
PH. (219) 868-5811

PRODUCT: "PREMIUM SERIES" 6-8 SINGLE & DOUBLE OUT-SWING STEEL DOOR

PART OR ASSEMBLY: ANCHORING LOCATIONS & DETAILS

NO.	DATE	GENERAL REVISION	WLN	BY
1	3/28/02			

REVISIONS

RW BUILDING CONSULTANTS, INC.
813.684.3831

DATE: 08/08/01
SCALE: N.T.S.
DWG. BY: TJH
CHK. BY: RW
DRAWING NO.: S-2149
SHEET 5 OF 8

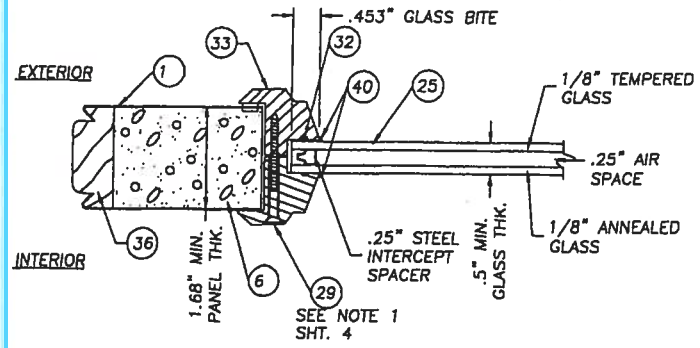

.5" INSULATED GLASS W/ PVC LITE FRAME GLAZING DETAIL

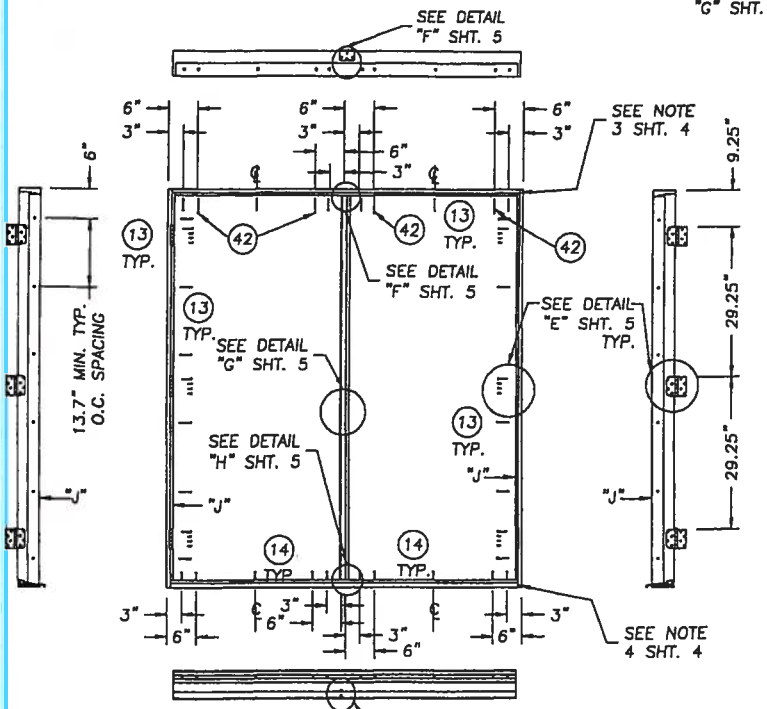

DOUBLE DOOR

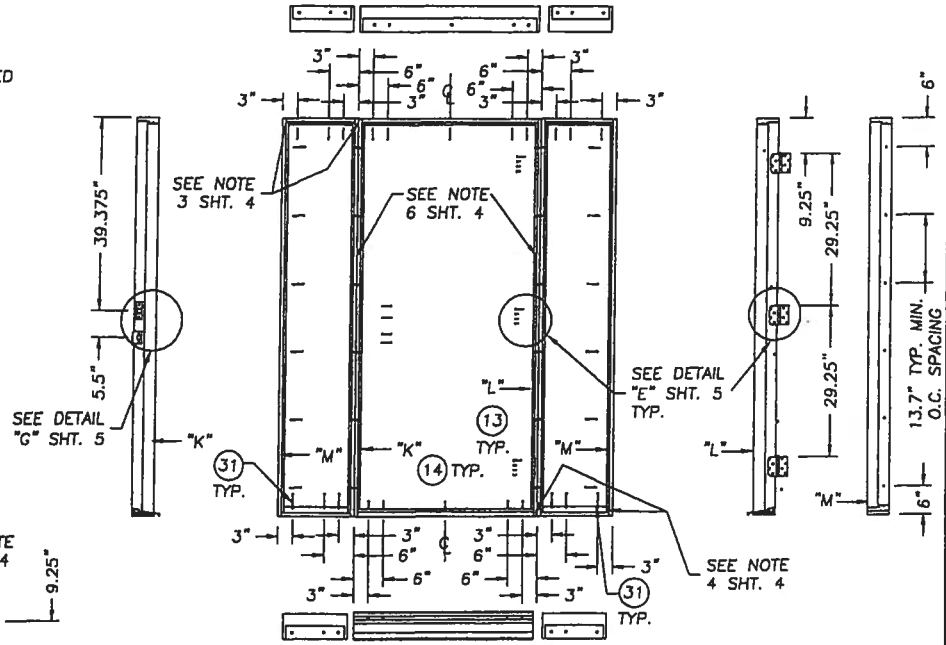

SINGLE DOOR W/SIDELITES

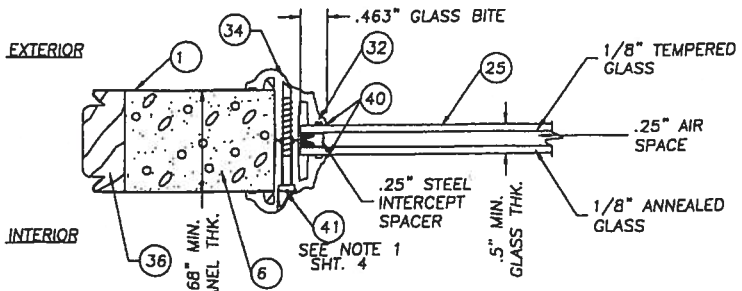

.5" INSULATED GLASS W/ BTS LITE FRAME GLAZING DETAIL

Approved as complying with the Florida Building Code
Date Jul 20, 2007
NOA# 01-0928.08
Miami Dade Product Control Division
By

THERMATRU®
108 MUTZFELD Rd.
BUTLER, IN 46721
PH. (219) 868-5811

PRODUCT: "PREMIUM SERIES" 6-8 SINGLE & DOUBLE OUT-SWING STEEL DOOR

PART OR ASSEMBLY: ANCHORING LOCATIONS & GLAZING DETAILS

NO.	DATE	REVISIONS	BY
1	3/28/02	GENERAL REVISION	WLN

RW BUILDING CONSULTANTS, INC.
813.684.3831

DATE: 08/08/01
SCALE: N.T.S.
DWG. BY: TJH
CHK. BY: RW
DRAWING NO.: S-2149
SHEET 6 OF 8

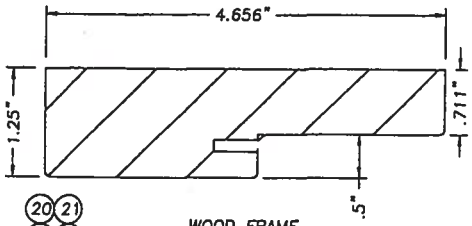

20 21 22 35

WOOD FRAME
FINGER JOINTED PONDEROSA PINE

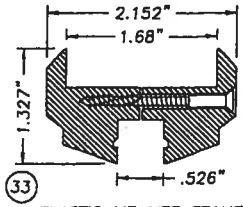

33

PLASTIC LIP LITE FRAME
EXTRUDED PVC

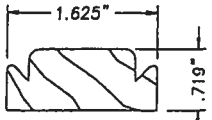

SIDELITE BLANK SIDE STILE
FINGER JOINTED PONDEROSA PINE

36

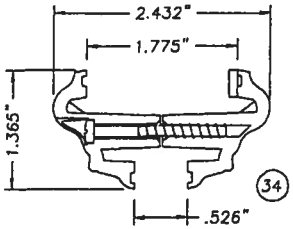

34

BTS PLASTIC LIP LITE FRAME
EXTRUDED BTS

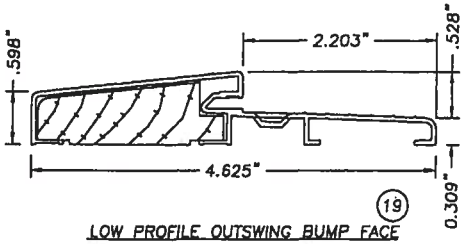

19

LOW PROFILE OUTSWING BUMP FACE
ALUMINUM/WOOD THRESHOLD
.050" WALL TYP.

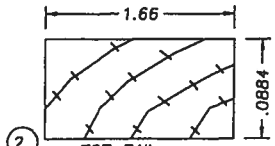

2

TOP RAIL
FINGER JOINTED PONDEROSA PINE

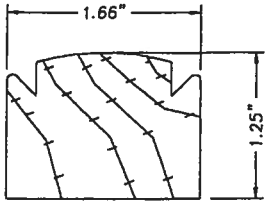

3

WOOD LATCH SIDE STILE

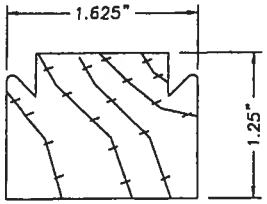

WOOD HINGE SIDE STILE 4

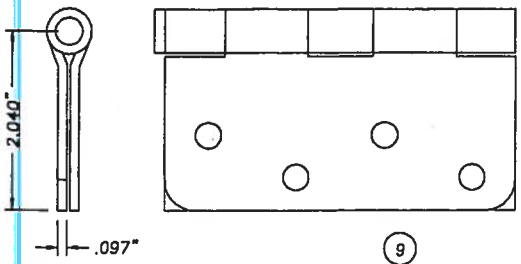

9

4 x 4 STEEL DOOR HINGE

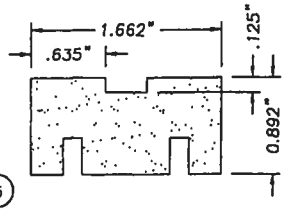

5

BOTTOM RAIL, WOOD COMPOSITE

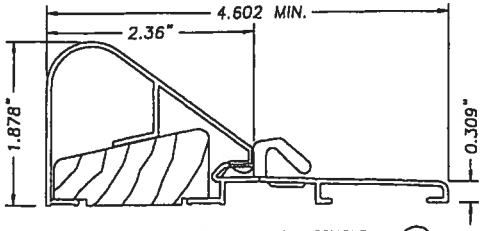

HIGH DAM THRESHOLD
MIN. WALL THK. = 0.050"
SEE NOTE 8 SHT. 4

39

NOTE
ALL DIMENSIONS ARE MINIMUM.
DIMENSIONS ARE THE LARGEST TESTED.

Approved as complying with the Florida Building Code
Date June 20, 2002
NOA# 01-0525.08
Miami Dade Product Control Division
By

THERMATRU®
108 MUTZFELD Rd.
BUTLER, IN 46721
PH. (219) 868-5811

PRODUCT: "PREMIUM SERIES" 6-8 SINGLE & DOUBLE OUT-SWING STEEL DOOR

PART OR ASSEMBLY: UNIT COMPONENTS

NO.	DATE	GENERAL REVISION	WLN	BY
1	3/28/02			

REVISIONS

RW BUILDING CONSULTANTS, INC.
813.684.3831

DATE: 08/08/01
SCALE: N.T.S
DWG. BY: TJH
CHK. BY: RW
DRAWING NO.: S-2149
SHEET 7 OF 8

Item	DESCRIPTION	Material
1	DOOR SKIN; PREMIUM SERIES 24GA. (.022" MIN.)	STEEL
2	TOP RAIL (1.628" x .851" THERMA-TRU PONDEROSA PINE)	WOOD
3	LATCH STILE (THERMA-TRU, PONDEROSA PINE 1.66" x 1.253")	WOOD
4	HINGE STILE (THERMA-TRU, PONDEROSA PINE 1.625" x 1.25")	WOOD
5	BOTTOM RAIL (1.662" x 0.892" THERMA-TRU WOOD COMPOSITE)	WOOD COMPOSITE
6	POLYURETHANE FOAM (BASF, 1.9lbs. DENSITY)	FOAM
7	SHORT REACH COMPRESSION WEATHERSTRIP (THREMA-TRU)	FOAM
8	LONG REACH COMPRESSION WEATHERSTRIP (THREMA-TRU)	FOAM
9	4" x 4" HINGE .097" THK. (THERMA-TRU)	STEEL
10	#10 x 3/4" lg. PFH WOOD SCREW (Hinge to Frame)	STEEL
11	#10 x 1" LG. PFH WOOD SCREW	STEEL
12	#10 x 2" LG. PFH WOOD SCREW	STEEL
13	#8 x 2 1/2" LG. PFH WOOD SCREW	STEEL
14	3/16" TAPCON ANCHOR (ELCO, 1.75" MIN. LG.)	STEEL
15	NOTE USED	
16	2x WOOD BUCK	WOOD
17	MAX. 1/4" SHIM MATERIAL	WOOD
18	KWIKSET TITAN 700 SERIES PASSAGE LOCK	–
19	ONE PIECE BUMP FACE THRESHOLD LOW PROFILE (THERMA-TRU)	ALUM./WOOD
20	4.656" HEADER (THERMA-TRU, PONDEROSA PINE)	WOOD
21	4.656" STRIKE JAMB (THERMA-TRU, PONDEROSA PINE)	WOOD
22	4.656" HINGE JAMB (THERMA-TRU, PONDEROSA PINE)	WOOD
23	KWIKSET TITAN 700 SERIES DEADBOLT	–
24	ASTRAGAL WINDJAMBER II WR68T (.052" WALL)	ALUM.
25	GLAZING, 1/2" INSULATED TEMPERED GLASS	GLASS
26	3/4" THK. PRESSURE TREATED SIDELITE PAD	WOOD
27	#8 x 1" LG. PANHEAD SHEET METAL SCREW	STEEL
28	NOT USED	–
29	#6-18 x 1 3/4" PHILLIPS FLATHEAD SCREW (FOR ITEM #33)	STEEL
30	NOT USED	–
31	3/16" TAPCON ANCHOR (ELCO, 3.25" MIN. LG.)	STEEL
32	1/8 THK. CELLULAR GLAZING TAPE (STIK-II TAPE)	–
33	PLASTIC LIP LITE FRAME (PVC, THERMA-TRU)	PVC
34	PLASTIC LIP LITE FRAME (BTS, THERMA-TRU)	BTS
35	4.656" BLANK JAMB (THERMA-TRU, PONDEROSA PINE)	WOOD
36	SIDELITE SIDE STILE (THERMA-TRU, 1.625" x .719" PONDEROSA PINE)	WOOD
37	#10 x 1 3/4" LG. PFH WOOD SCREW	STEEL
38	LOCK BLOCK 2.625" x 10.375" x 1.625" THK.	WOOD
39	HIGH WATER DAM THRESHOLD (THERMA-TRU)	ALUM.
40	SILICONE CAULK	SILICONE
41	#8-10 x 1 1/2" PLASCREW (FOR ITEM #34)	STEEL
42	#10 x 3" LG. PFH WOOD SCREW	STEEL

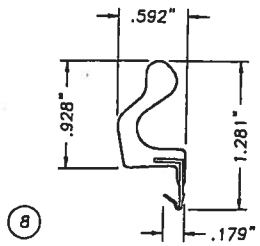

LONG REACH COMPRESSION WEATHERSTRIP
FOAM CELL CORE W/VINYL JACKET

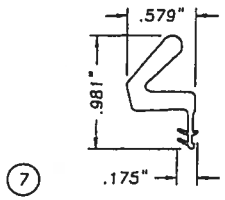

COMPRESSION WEATHERSTRIP
BY THERMA-TRU
FOAM CELL CORE W/VINYL JACKET

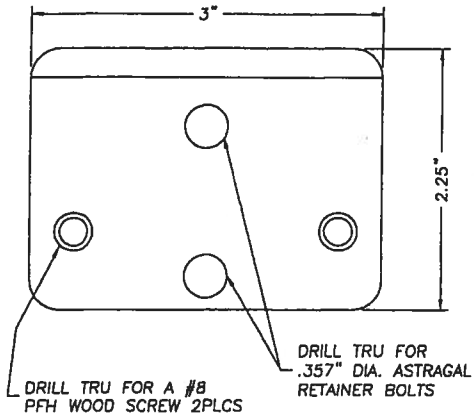

WINDJAMBER II WR68T STRIKE PLATE

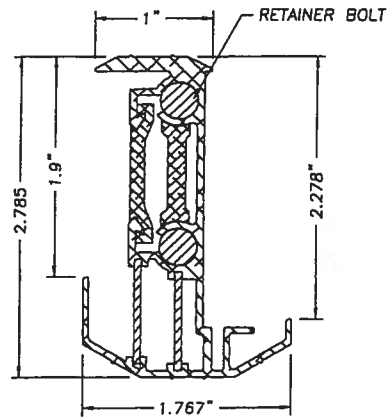

WINDJAMBER II WR68T
ASTRAGAL (ALUMINUM .052" WALL TYP.)

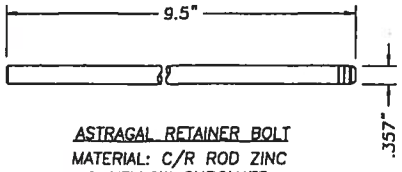

ASTRAGAL RETAINER BOLT
MATERIAL: C/R ROD ZINC
& YELLOW CHROMATE

Approved as complying with the Florida Building Code
Date June 26, 2002
NOA# 01-0828.03
Miami Dade Product Control Division
By

THERMATRU®
108 MUTZFELD Rd.
BUTLER, IN 46721
PH. (219) 868-5811

PRODUCT: "PREMIUM SERIES" 6-8 SINGLE & DOUBLE OUT-SWING STEEL DOOR

PART OR ASSEMBLY: BILL OF MATERIALS & UNIT COMPONENTS

NO.	DATE	REVISIONS	BY
1	3/28/02	GENERAL REVISION	WJW

RW BUILDING CONSULTANTS, INC.
813.884.3831

DATE: 08/08/01
SCALE: N.T.S.
DWG. BY: TJH
CHK. BY: RW
DRAWING NO.: S-2149
SHEET 8 OF 8

MIAMI-DADE

BUILDING CODE COMPLIANCE OFFICE (BCCO)
PRODUCT CONTROL DIVISION

MIAMI-DADE COUNTY, FLORIDA
METRO-DADE FLAGLER BUILDING
140 WEST FLAGLER STREET, SUITE 1603
MIAMI, FLORIDA 33130-1563
(305) 375-2901 FAX (305) 375-2908

NOTICE OF ACCEPTANCE (NOA)

Therma-Tru Corporation
108 Mutzfeld Road
Butler, IN 46721

SCOPE:

This NOA is being issued under the applicable rules and regulations governing the use of construction materials. The documentation submitted has been reviewed by the BCCO and accepted by the Building Code and Product Review Committee (BCPRC) to be used in Miami Dade County and other areas where allowed by the Authority Having Jurisdiction (AHJ).

This NOA shall not be valid after the expiration date stated below. The BCCO (In Miami Dade County) and/or the AHJ (in areas other than Miami Dade County) reserve the right to have this product or material tested for quality assurance purposes. If this product or material fails to perform in the accepted manner, the manufacturer will incur the expense of such testing and the AHJ may immediately revoke, modify, or suspend the use of such product or material within their jurisdiction. BCPRC reserves the right to revoke this acceptance, if it is determined by BCCO that this product or material fails to meet the requirements of the applicable building code.

This product is approved as described herein, and has been designed to comply with the South Florida Building Code, 1994 Edition for Miami-Dade County or Florida Building Code.

DESCRIPTION: Outswing Glazed Residential Steel Door w\Sidelites

APPROVAL DOCUMENT: Drawing No. S-2003, titled "Therma-Tru Wood edge Outswing", sheets 1 through 6 to 6, prepared by RW Consulting, dated 3/9/01, bearing the Miami-Dade County Product Control Renewal stamp with the Notice of Acceptance number and expiration date by the Miami-Dade County Product Control Division.

MISSILE IMPACT RATING: None

LABELING: Each unit shall bear a permanent label with the manufacturer's name or logo, city, state and following statement: "Miami-Dade County Product Control Approved", unless otherwise noted herein.

RENEWAL of this NOA shall be considered after a renewal application has been filed and there has been no change in the applicable building code negatively affecting the performance of this product.

TERMINATION of this NOA will occur after the expiration date or if there has been a revision or change in the materials, use, and/or manufacture of the product or process. Misuse of this NOA as an endorsement of any product, for sales, advertising or any other purposes shall automatically terminate this NOA. Failure to comply with any section of this NOA shall be cause for termination and removal of NOA.

ADVERTISEMENT: The NOA number preceded by the words Miami-Dade County, Florida, and followed by the expiration date may be displayed in advertising literature. If any portion of the NOA is displayed, then it shall be done in its entirety.

INSPECTION: A copy of this entire NOA shall be provided to the user by the manufacturer or its distributors and shall be available for inspection at the job site at the request of the Building Official.

This NOA **renews NOA # 00-0207.06** and, consists of this page 1 as well as approval document mentioned above. The submitted documentation was reviewed by **Raul Rodriguez.**

PRODUCT CONTROL ACCEPTED

THERMA-TRU®

"CONSTRUCTION" AND "PREMIUM" SERIES
INSULATED STEEL DOOR WITH WOOD FRAMES.

GENERAL NOTES

1. THIS PRODUCT IS DESIGNED TO MEET THE SOUTH FLORIDA BUILDING CODE 1994 EDITION FOR MIAMI-DADE COUNTY.
2. WOOD BUCKS BY OTHERS, MUST BE ANCHORED PROPERLY TO TRANSFER LOADS TO THE STRUCTURE.
3. PRODUCT ANCHORS SHALL BE AS LISTED AND SPACED AS SHOWN ON DETAILS. ANCHOR EMBEDMENT TO BASE MATERIAL SHALL BE BEYOND WALL DRESSING OR STUCCO.
4. MIAMI-DADE APPROVED IMPACT RESISTANT SHUTTERS ARE REQUIRED.
5. DESIGNED PRESSURE RATING SEE TABLE PAGE 1.
6. SIDELITES ARE AN OPTION AND CAN BE IN A SINGLE OR DOUBLE CONFIGURATION.

RESIDENTIAL INSULATED STEEL DOOR
(Common to all frame conditions)

Door Leaf Construction:
Face sheets: 25 GA.(0.018")minimum thickness, Galvanized steel A-525 commercial quality - AKDQ per ASTM 620 with yield strength Fy(min.)=47,000 psi
Core design: Polyurethane foam core, with1.9 lbs. density by BASF.
Construction: Flush or embossed type. The vertical edges of the skin, are rolled formed to provide a mechanical interlock with finger jointed pine stiles. Wood composite end rails are butt jointed to styles at corners. Panels are sandwich glazed using a two piece PVC lite frame with mitered & welded corners.

TABLE OF CONTENTS

SHEET #	DESCRIPTION
1	COMMON (GENERAL NOTES, TYPICAL ELEVATION)
2	VERTICAL CROSS SECTIONS & BILL OF MATERIALS
3	HORIZONTAL CROSS SECTIONS & DOOR MODELS
4	HORIZONTAL CROSS SECTIONS & GLAZING DETAILS
5	ANCHORING LOCATIONS
6	ANCHORING LOCATIONS

DESIGN PRESSURE RATING

	WHERE WATER INFILTRATION REQUIREMENT IS NEEDED
POSITIVE	+ 48.0 PSF
NEGATIVE	- 51.0 PSF

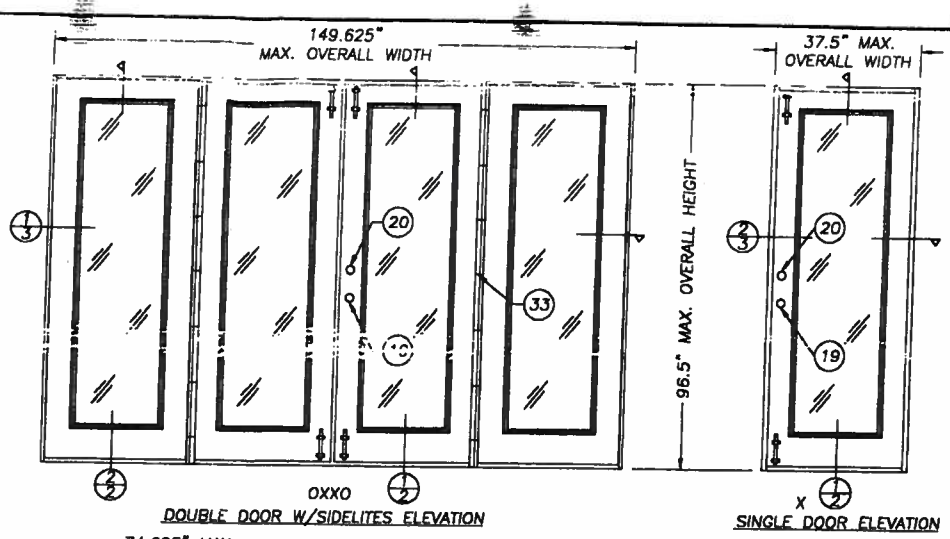

DOUBLE DOOR W/SIDELITES ELEVATION

SINGLE DOOR ELEVATION

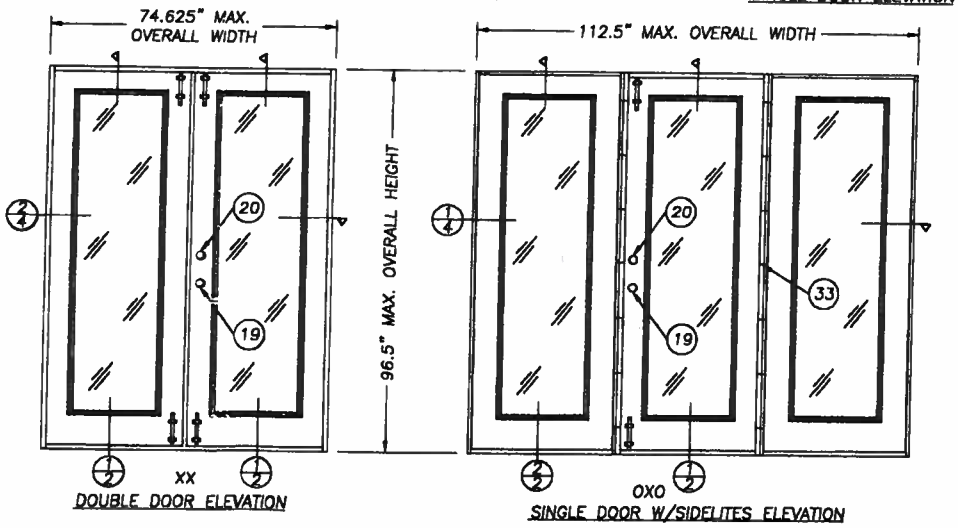

DOUBLE DOOR ELEVATION

SINGLE DOOR W/SIDELITES ELEVATION

ALL DOOR MODELS ARE VIEWED FROM THE INTERIOR SIDE (OUTSWING DOORS)

PRODUCT RENEWED as complying with the Florida Building Code Acceptance No. 02-0418.01 Expiration Date 04/09/07
By Miami Dade Product Control Division

APPROVED AS COMPLYING WITH THE SOUTH FLORIDA BUILDING CODE
DATE APRIL 05, 2001
BY Isaac J. Chanda
PRODUCT CONTROL DIVISION
BUILDING CODE COMPLIANCE OFFICE
ACCEPTANCE NO. 00-0207.06

THERMA-TRU®
108 MUTZFELD Rd.
BUTLER, IN 46721
PH. (219) 868-5811

PRODUCT: THRMA TRU WOODEDGE OUTSWING UP TO 12-0 x 8-0 W/3-0 SIDELITES
PART OR ASSEMBLY: ELEVATIONS AND GENERAL NOTES

NO.	DATE	REVISIONS	BY
2	3/09/01	GENERAL REVISION	RW
1	4/11/00	GENERAL REVISION	TJH

RW BUILDING CONSULTANTS, INC.
813.684.3831

DATE: 3/3/00
SCALE: N.T.S.
DWG. BY: TJH
CHK. BY: RW
DRAWING NO.: S-2003
SHEET 1 OF 6

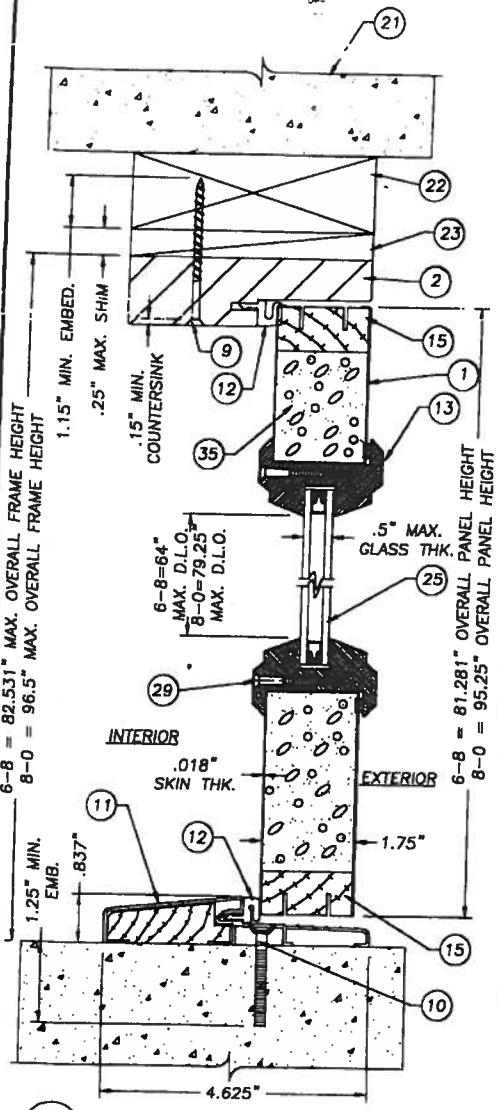

1/2 VERTICAL CROSS-SECTION

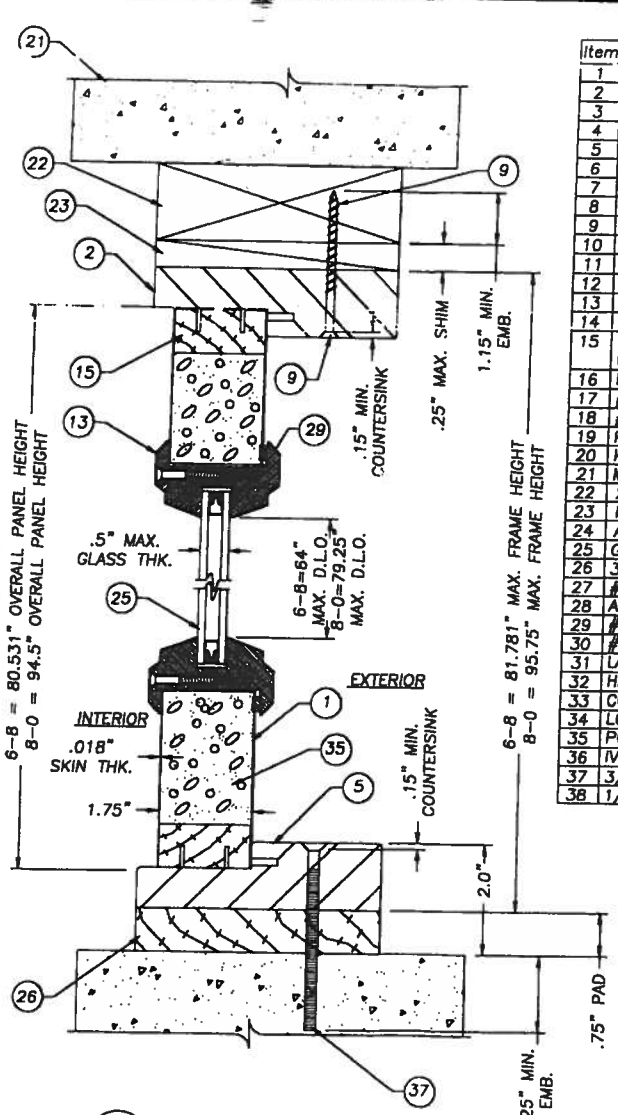

2/2 VERTICAL CROSS-SECTION

Item	DESCRIPTION	Material
1	CONSTRUC. SERIES DOOR (25GA. .018" MIN.)	STEEL
2	4 1/2" HEADER (THERMA-TRU)	WOOD
3	4 1/2" LATCH JAMB (THERMA-TRU, PONDEROSA PINE)	WOOD
4	4 1/2" HINGE JAMB (THERMA-TRU, PONDEROSA PINE)	WOOD
5	4 1/2" BLANK JAMB (THERMA-TRU, PONDEROSA PINE)	WOOD
6	4" x 4" HINGE .097" THK. (THERMA-TRU)	STEEL
7	#9 x 3/4" lg. (Hinge to Frame)	STEEL
8	#10 WOOD SCREW X 2 1/2" LG.	STEEL
9	#8 x 2 1/2" LG. WOOD SCREW	STEEL
10	3/16" TAPCON ANCHOR (ELCO, 1.75" MIN. LG.)	STEEL
11	ONE PIECE BUMP FACE THRESHOLD (THERMA-TRU)	ALUM./WOOD
12	COMPRESSION WEATHERSTRIP (THERMA-TRU)	
13	PLASTIC LIP LITE FRAME (PVC, THERMA-TRU)	PVC
14	#10 x 1 1/4" LG. TYPE "A" FLATHEAD	STEEL
15	TOP & BOTTOM RAIL (1.75" x 1.625") (THERMA-TRU, PONDEROSA PINE)	WOOD
16	BLANK SIDE STYLE (THERMA-TRU, PONDEROSA PINE)	WOOD
17	#8 x 1/2" LG. TYPE "AB" PANHEAD	STEEL
18	#10 WOOD SCREW X 2" LG.	STEEL
19	KWIKSET 200 DL PASSAGE	
20	KWIKSET 660 DEADBOLT	
21	MASONRY WALL	
22	2x WOOD BUCK	WOOD
23	MAX. 1/4" SHIM MATERIAL	WOOD
24	ASTRAGAL (.052" WALL THK.)	WOOD/ALUM.
25	GLAZING, 1/2" INSULATED TEMPERED GLASS	GLASS
26	3/4" THK. PRESSURE TREATED SIDELITE PAD	WOOD
27	#12 x 1/2" LG. PANHEAD SHEET METAL SCREW	STEEL
28	ASTRAGAL WEATHERSRIP	VINYL
29	#6-18 x 1 3/4" PHILLIPS FLATHEAD SCREW	STEEL
30	#9 x 1" LG. PHILLIPS FLATHEAD SCREW	STEEL
31	LATCH SIDE STYLE (THERMA-TRU, PONDEROSA PINE)	WOOD
32	HINGE SIDE STYLE (THERMA-TRU, PONDEROSA PINE)	WOOD
33	CORRUGATED STAPLE FASTENER (1 1/2" X 3/4")	STEEL
34	LOCK BLOCK (4" x 11" x 1.625")	WOOD
35	POLYURETHANE FOAM (BASF, 1.9lbs. DENSITY)	FOAM
36	IVES SURFACE BOLT (.25" STEEL)	STEEL
37	3/16" TAPCON ANCHOR (ELCO, 3.25" MIN. LG.)	STEEL
38	1/8 THK. CELLULAR GLAZING TAPE (STIK-II TAPE)	—

NOTE:
SIDELITE IS DIRECT SET INTO JAMB WITH #10 x 2" PH.F.H. WOOD SCREWS AT 6" FROM EACH END AND A MAX. OF 12" O.C. ON VERTICAL LEG JAMBS ONLY.

PRODUCT RENEWED as complying with the Florida Building Code
Acceptance No. 02-0418.01
Expiration Date 04/03/07
By Miami-Dade Product Control Division

APPROVED AS COMPLYING WITH THE SOUTH FLORIDA BUILDING CODE
DATE APRIL 05, 2001
BY Ishaq I. Chanda
PRODUCT CONTROL DIVISION
BUILDING CODE COMPLIANCE OFFICE
ACCEPTANCE NO. 00-0207.06

THERMA TRU®
108 MUTZFELD Rd.
BUTLER, IN 46721
PH. (219) 868-5811

PRODUCT: THERMA TRU WOODEDGE OUTSWING UP TO 12-0 x 8-0 W/3-0 SIDELITES
PART OR ASSEMBLY: VERTICAL CROSS SECTIONS & BILL OF MATERIALS

NO.	DATE	REVISIONS	BY
1	4/11/00	GENERAL REVISION	TJH
2	3/09/01	GENERAL REVISION	RW

RW BUILDING CONSULTANTS, INC.
813.684.3831

DATE: 3/3/00
SCALE: N.T.S.
DWG. BY: TJH
CHK. BY: RW
DRAWING NO.: S-2003
SHEET 2 OF 6

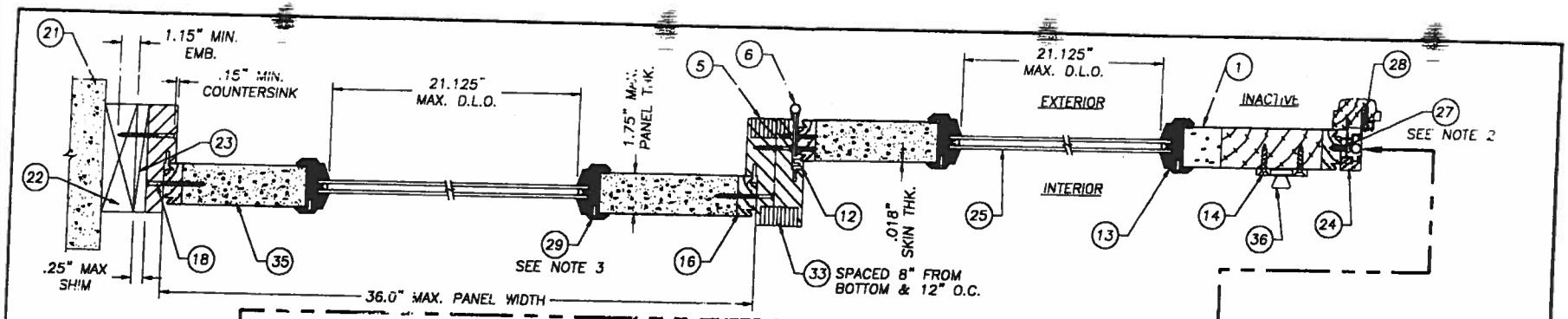

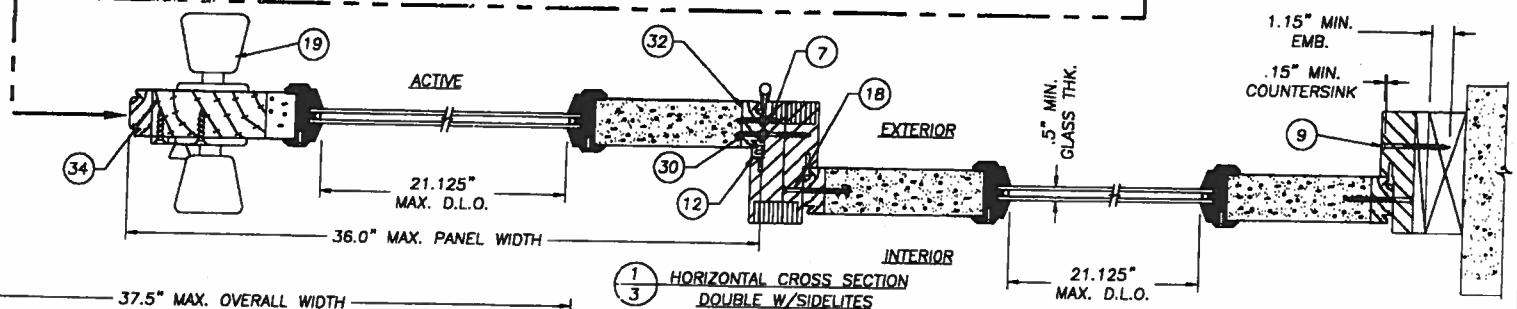

1/3 HORIZONTAL CROSS SECTION DOUBLE W/SIDELITES

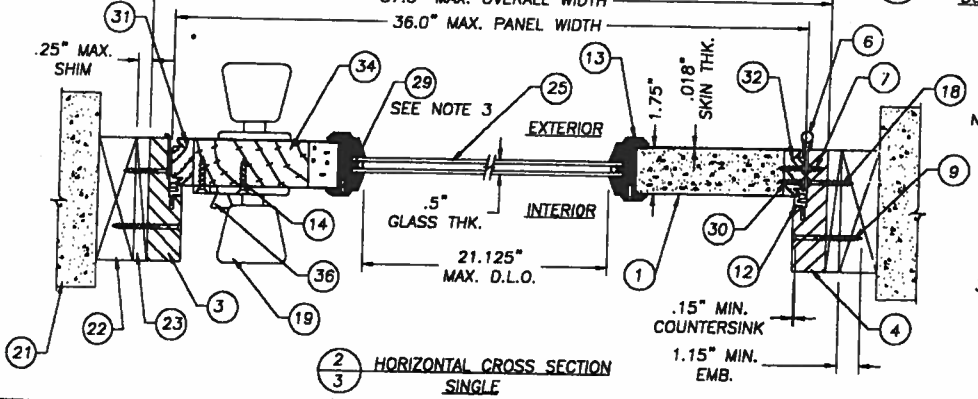

2/3 HORIZONTAL CROSS SECTION SINGLE

NOTE:
1. SIDELITE IS DIRECT SET INTO JAMB WITH #10 x 2" PH.F.H. WOOD SCREWS AT 6" FROM EACH END AND A MAX. OF 12" O.C. ON VERTICAL LEG JAMBS ONLY.
2. SPACING OF SCREW ITEM #27 IS AS FOLLOWS FOR BOTH 6-8 AND 8-0 MODELS: FROM THE BOTTOM UP AND THE TOP DOWN SPACING IS 1", 3", 5", 7", 10" & 10".
3. SPACING OF SCREW ITEM #29 IS AS FOLLOWS FOR BOTH 6-8 AND 8-0 MODELS: FROM THE BOTTOM UP ON SIDES, 6.438" & (8-0) (7) MORE AT 9.893" & (6-8) (6) MORE AT 9.21" O.C. TOP & BOTTOM, 3.219" FROM THE END IN & (3) MORE AT 5.896" O.C.

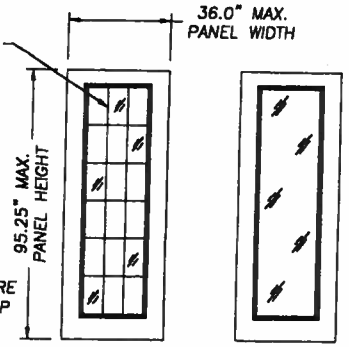

DOOR PANEL MODELS

THERMA TRU®
108 MUTZFELD Rd.
BUTLER, IN 46721
PH. (219) 868-5811

NO.	DATE		BY
2	3/09/01	GENERAL REVISION	RW
1	4/11/00	GENERAL REVISION	TJH

REVISIONS

PRODUCT: THERMA TRU WOODEDGE OUTSWING UP TO 12-0 x 8-0 W/3-0 SIDELITES

PART OR ASSEMBLY: HORIZONTAL CROSS SECTIONS & DOOR MODELS

RW BUILDING CONSULTANTS, INC. 813.684.3831

PRODUCT RENEWED as complying with the Florida Building Code Acceptance No. 02-0415.01 Expiration Date 04/05/07 By Miami Dade Product Control Division

APPROVED AS COMPLYING WITH THE SOUTH FLORIDA BUILDING CODE DATE APRIL 03, 2001 BY Ishaq I. Chanda PRODUCT CONTROL DIVISION BUILDING CODE COMPLIANCE OFFICE ACCEPTANCE NO. 00-0207.06

DATE:	3/3/00
SCALE:	N.T.S.
DWG. BY:	TJH
CHK. BY:	RW
DRAWING NO.:	S-2003
SHEET	3 OF 6

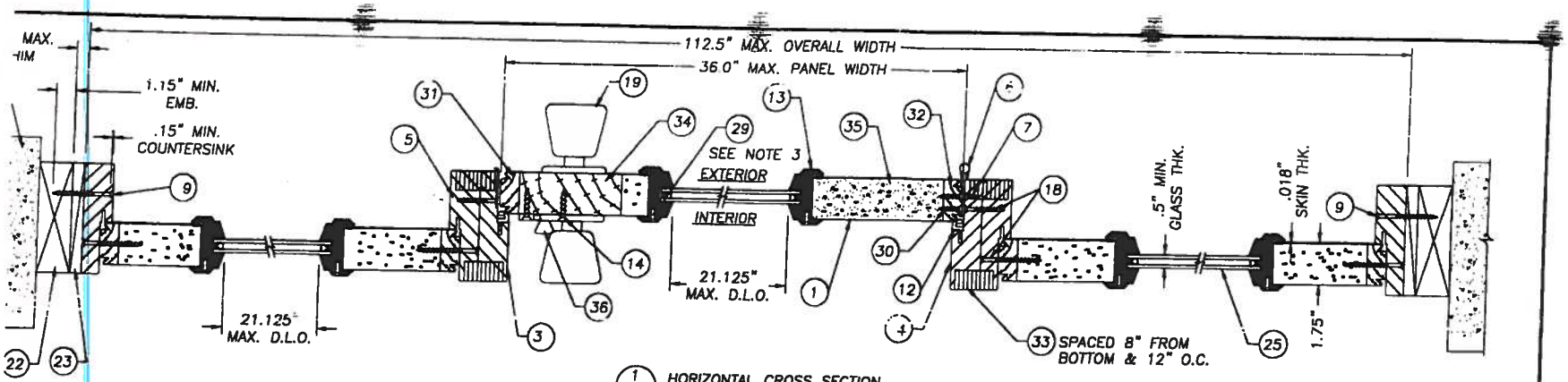

1/4 HORIZONTAL CROSS SECTION SINGLE W/SIDELITES

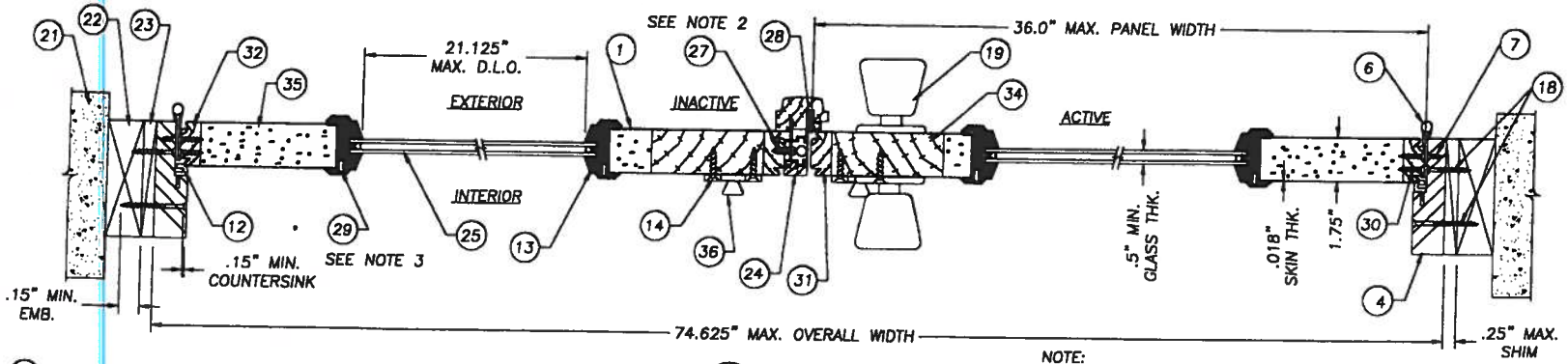

2/4 HORIZONTAL CROSS SECTION DOUBLE

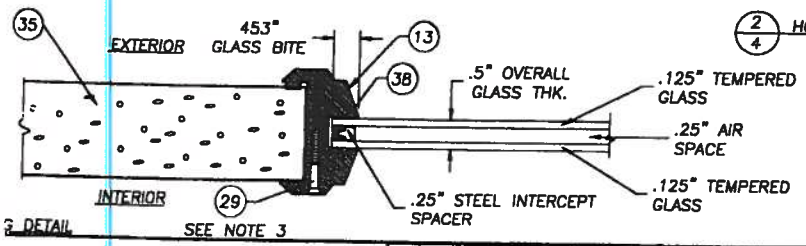

G DETAIL

NOTE:

1. SIDELITE IS DIRECT SET INTO JAMB WITH #10 x 2" PH.F.H. WOOD SCREWS AT 6" FROM EACH END AND A MAX. OF 12" O.C. ON VERTICAL LEG JAMBS ONLY.
2. SPACING OF SCREW ITEM #27 IS AS FOLLOWS FOR BOTH 6-8 AND 8-0 MODELS: FROM THE BOTTOM UP AND THE TOP DOWN SPACING IS 1", 3", 5", 7", 10" & 10".
3. SPACING OF SCREW ITEM #29 IS AS FOLLOWS FOR BOTH 6-8 AND 8-0 MODELS: FROM THE BOTTOM UP ON SIDES, 6.438" & (8-0) (7) MORE AT 9.893" & (6-8) (6) MORE AT 9.21" O.C. TOP & BOTTOM, 3.219" FROM THE END IN & (3) MORE AT 5.896" O.C.

THERMA TRU®
108 MUTZFELD Rd.
BUTLER, IN 46721
PH. (219) 868-5811

NO.	DATE		BY
2	3/09/01	GENERAL REVISION	RW
1	4/11/00	GENERAL REVISION	TJH

REVISIONS

PRODUCT: THERMA TRU WOODEDGE OUTSWING UP TO 12-0 x 8-0 W/3-0 SIDELITES

PART OR ASSEMBLY: HORIZONTAL CROSS SECTIONS & GLAZING DETAIL

RW BUILDING CONSULTANTS, INC. 813.684.3831

PRODUCT RENEWED as complying with the Florida Building Code Acceptance No. C2-C11K-C1 Expiration Date 04/05/02 By Miami Dade Product Control Division

APPROVED AS COMPLYING WITH THE SOUTH FLORIDA BUILDING CODE DATE APRIL 05, 2001 BY Ishaq I. Chanda PRODUCT CONTROL DIVISION BUILDING CODE COMPLIANCE OFFICE ACCEPTANCE NO 00-0207.06

DATE:	3/3/00
SCALE:	N.T.S.
DWG. BY:	TJH
CHK. BY:	RW
DRAWING NO.:	S-2003
SHEET	4 OF 6

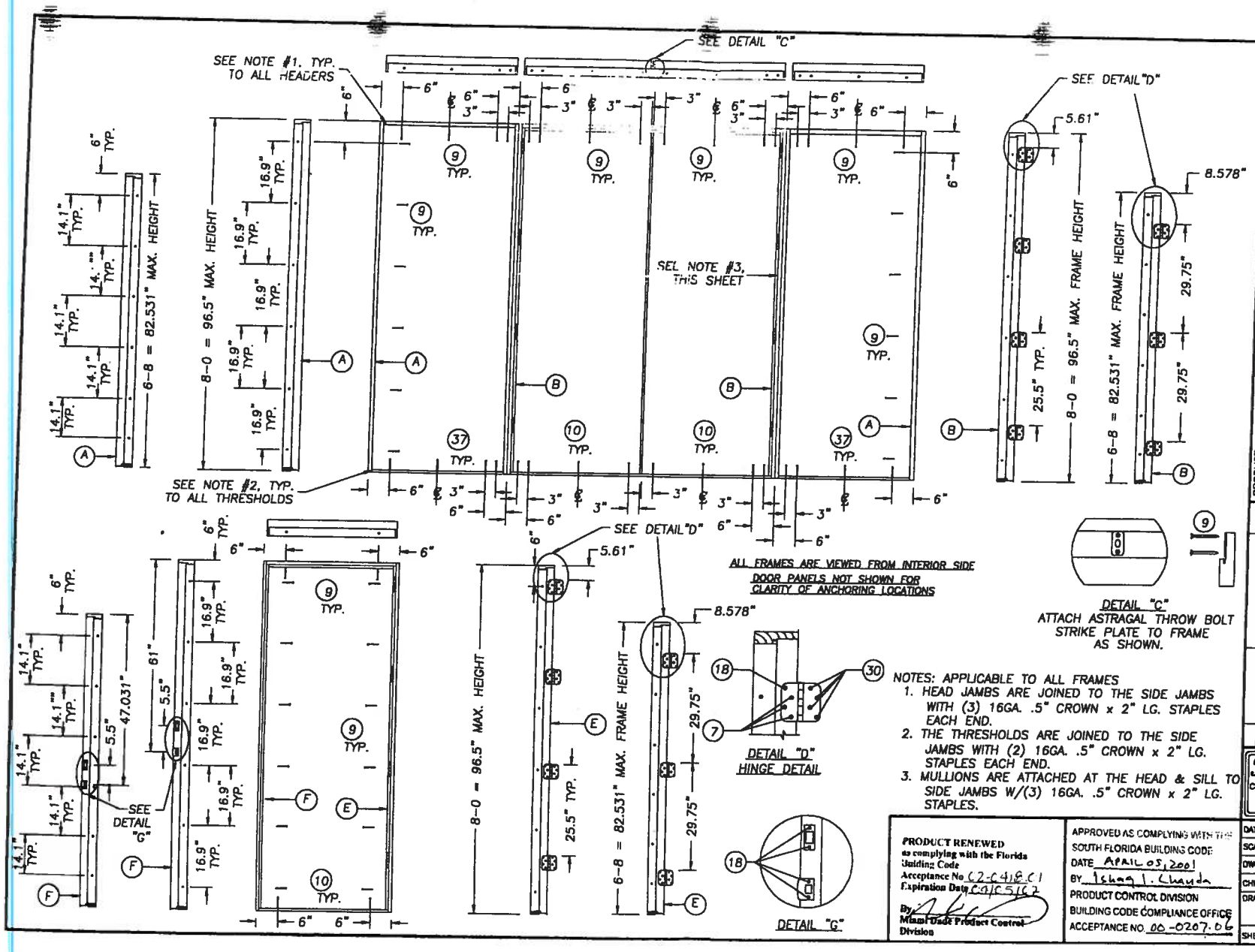

NOTES: APPLICABLE TO ALL FRAMES

1. HEAD JAMBS ARE JOINED TO THE SIDE JAMBS WITH (3) 16GA. .5" CROWN x 2" LG. STAPLES EACH END.
2. THE THRESHOLDS ARE JOINED TO THE SIDE JAMBS WITH (2) 16GA. .5" CROWN x 2" LG. STAPLES EACH END.
3. MULLIONS ARE ATTACHED AT THE HEAD & SILL TO SIDE JAMBS W/(3) 16GA. .5" CROWN x 2" LG. STAPLES.

PRODUCT RENEWED as complying with the Florida Building Code
Acceptance No. C2-C418.C1
Expiration Date C9/C5/C2
By: Miami-Dade Product Control Division

APPROVED AS COMPLYING WITH THE SOUTH FLORIDA BUILDING CODE
DATE APRIL 03, 2001
BY Ishaq I. Chanda
PRODUCT CONTROL DIVISION
BUILDING CODE COMPLIANCE OFFICE
ACCEPTANCE NO. 00-0207.06

THERMATRU®
108 MUTZFELD Rd.
BUTLER, IN 46721
PH. (219) 868-5811

PRODUCT: THERMA TRU WOODEDGE OUTSWING UP TO 12-0 x 8-0 W/3-0 SIDELITES
PART OR ASSEMBLY: ANCHORING LAYOUTS

NO.	DATE	BY	REVISIONS
2	3/09/01	RW	GENERAL REVISION
1	4/11/00	TJH	GENERAL REVISION

RW BUILDING CONSULTANTS, INC.
813.684.3831

DATE: 3/2/00
SCALE: N.T.S.
DWG. BY: TJH
CHK. BY: RW
DRAWING NO.: S-2003
SHEET 5 OF 6

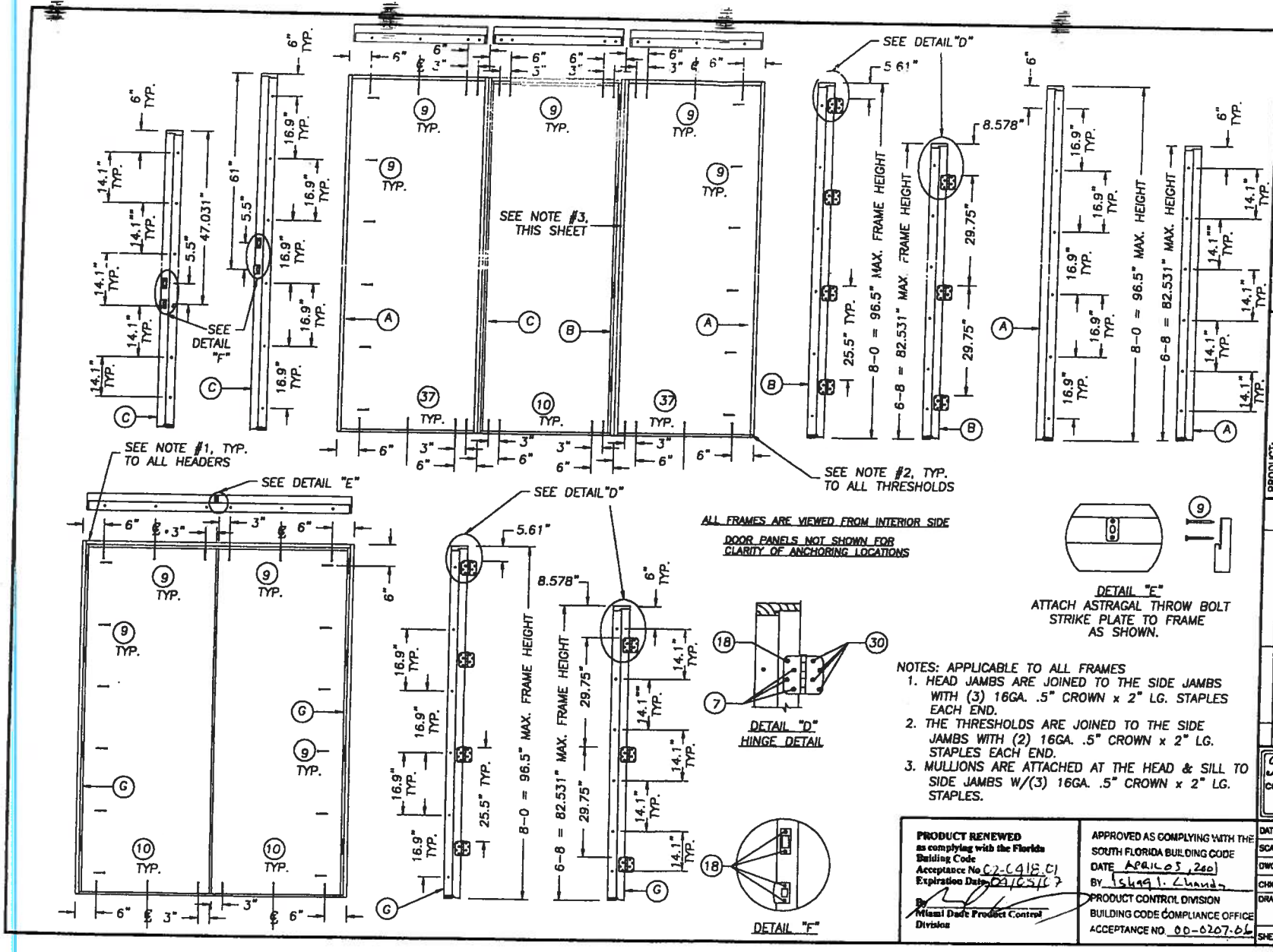

NOTES: APPLICABLE TO ALL FRAMES

1. HEAD JAMBS ARE JOINED TO THE SIDE JAMBS WITH (3) 16GA. .5" CROWN x 2" LG. STAPLES EACH END.
2. THE THRESHOLDS ARE JOINED TO THE SIDE JAMBS WITH (2) 16GA. .5" CROWN x 2" LG. STAPLES EACH END.
3. MULLIONS ARE ATTACHED AT THE HEAD & SILL TO SIDE JAMBS W/(3) 16GA. .5" CROWN x 2" LG. STAPLES.

PRODUCT RENEWED
as complying with the Florida Building Code
Acceptance No. C2-C416.C1
Expiration Date 04/05/07
By
Miami Dade Product Control Division

APPROVED AS COMPLYING WITH THE SOUTH FLORIDA BUILDING CODE
DATE APRIL 05, 2001
BY Isaac I. Chanda
PRODUCT CONTROL DIVISION
BUILDING CODE COMPLIANCE OFFICE
ACCEPTANCE NO. 00-0207.06

THERMA TRU®
108 MUTZFELD Rd.
BUTLER, IN 46721
PH. (219) 868-5811

PRODUCT: THERMA TRU WOODEDGE OUTSWING UP TO 12-0 x 8-0 W/3-0 SIDELITES

PART OR ASSEMBLY: ANCHORING LAYOUTS

NO.	DATE	REVISIONS	BY
2	3/09/01	GENERAL REVISIONS	RW
1	4/11/00	GENERAL REVISIONS	TJH

RW BUILDING CONSULTANTS, INC.
813.684.3831

DATE: 3/2/00
SCALE: N.T.S.
DWG. BY: TJH
CHK. BY: RW
DRAWING NO.: S-2003
SHEET 6 OF 6

MIAMI-DADE

BUILDING CODE COMPLIANCE OFFICE (BCCO)
PRODUCT CONTROL DIVISION

MIAMI-DADE COUNTY, FLORIDA
METRO-DADE FLAGLER BUILDING
140 WEST FLAGLER STREET, SUITE 1603
MIAMI, FLORIDA 33130-1563
(305) 375-2901 FAX (305) 375-2908

NOTICE OF ACCEPTANCE (NOA)

Tamko Roofing Products, Inc.
P.O. Box 1404
Joplin, MO 64802

SCOPE:

This NOA is being issued under the applicable rules and regulations governing the use of construction materials. The documentation submitted has been reviewed by Miami-Dade County Product Control Division and accepted by the Board of Rules and Appeals (BORA) to be used in Miami Dade County and other areas where allowed by the Authority Having Jurisdiction (AHJ).

This NOA shall not be valid after the expiration date stated below. The Miami-Dade County Product Control Division (In Miami Dade County) and/or the AHJ (in areas other than Miami Dade County) reserve the right to have this product or material tested for quality assurance purposes. If this product or material fails to perform in the accepted manner, the manufacturer will incur the expense of such testing and the AHJ may immediately revoke, modify, or suspend the use of such product or material within their jurisdiction. BORA reserves the right to revoke this acceptance, if it is determined by Miami-Dade County Product Control Division that this product or material fails to meet the requirements of the applicable building code.

This product is approved as described herein, and has been designed to comply with the High Velocity Hurricane Zone of the Florida Building Code.

DESCRIPTION: TAMKO Heritage Declaration & Heritage XL Roof Shingles

LABELING: Each unit shall bear a permanent label with the manufacturer's name or logo, city, state and following statement: "Miami-Dade County Product Control Approved", unless otherwise noted herein.

RENEWAL of this NOA shall be considered after a renewal application has been filed and there has been no change in the applicable building code negatively affecting the performance of this product.

TERMINATION of this NOA will occur after the expiration date or if there has been a revision or change in the materials, use, and/or manufacture of the product or process. Misuse of this NOA as an endorsement of any product, for sales, advertising or any other purposes shall automatically terminate this NOA. Failure to comply with any section of this NOA shall be cause for termination and removal of NOA.

ADVERTISEMENT: The NOA number preceded by the words Miami-Dade County, Florida, and followed by the expiration date may be displayed in advertising literature. If any portion of the NOA is displayed, then it shall be done in its entirety.

INSPECTION: A copy of this entire NOA shall be provided to the user by the manufacturer or its distributors and shall be available for inspection at the job site at the request of the Building Official.

This consists of pages 1 through 4.
The submitted documentation was reviewed by Frank Zuloaga, RRC

ROOFING ASSEMBLY APPROVAL

Category:	Roofing
Sub-Category:	07310 Composition Shingles
Materials	Dimensional
Deck Type:	Wood

1. SCOPE:

This approves **Tamko Heritage Declaration and Heritage XL** Asphalt Shingles, manufactured by **Tamko Roofing Products, Inc.** as described in this Notice of Acceptance.

2. PRODUCT DESCRIPTION

Product	Dimensions	Test Specifications	Product Description
Heritage Declaration & Heritage XL	12" x 36"	TAS 110	A heavy weight dimensional asphalt shingle.

3. EVIDENCE SUBMITTED:

Test Agency	Test Identifier	Test Name/Report	Date
PRI Asphalt Technologies, Inc.	TAS 100	TAP-066-02-01 TAP-073-02-01	01/09/03 05/20/03
Underwriters Laboratories, Inc.	ASTM D 3462	R2919	06/12/03
Underwriters Laboratories, Inc.	TAS 107	03CA08442	06/12/03

4. LIMITATIONS

4.1 Fire classification is not part of this acceptance; refer to a current Approved Roofing Materials Directory for fire ratings of this product.

4.2 Shall not be installed on roof mean heights in excess of 33 ft.

4.3 All products listed herein shall have a quality assurance audit in accordance with the Florida Building Code and Rule 9B-72 of the Florida Administrative Code.

5. INSTALLATION

5.1 Shingles shall be installed in accordance with Roofing Application Standard RAS 115.

5.2 The manufacturer shall provide clearly written application instructions.

5.3 Exposure and course layout shall be in compliance with Detail 'A', attached.

5.4 Nailing shall be in compliance with Detail 'B', attached.

6. LABELING

5.1 Shingles shall be labeled with the Miami-Dade Logo or the wording "Miami-Dade County-Product Control Approved".

7. BUILDING PERMIT REQUIREMENTS

7.1 Application for building permit shall be accompanied by copies of the following:

7.1.1 This Notice of Acceptance.

7.1.2 Any other documents required by the Building Official or the applicable Building Code in order to properly evaluate the installation of this system.

DETAIL A

HERITAGE DECLARATION & XL

All dimensions are in inches.

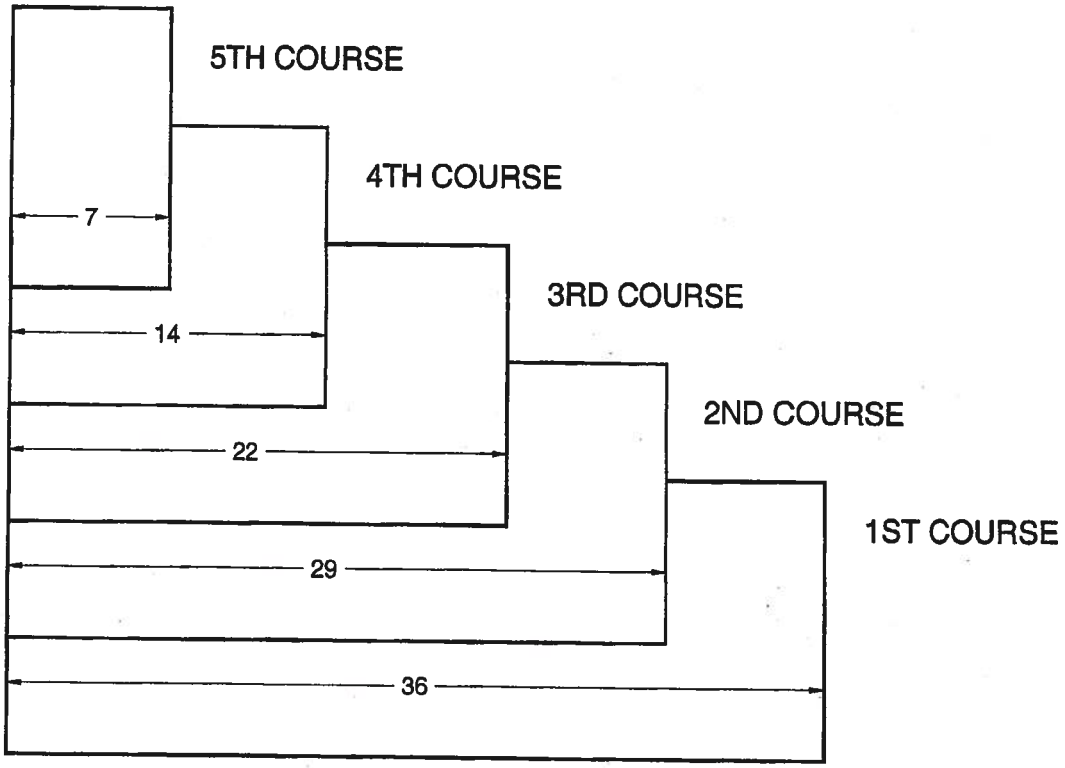

DETAIL B

HERITAGE DECLARATION

12" x 36" LAMINATED SHINGLE
All dimensions are in inches.

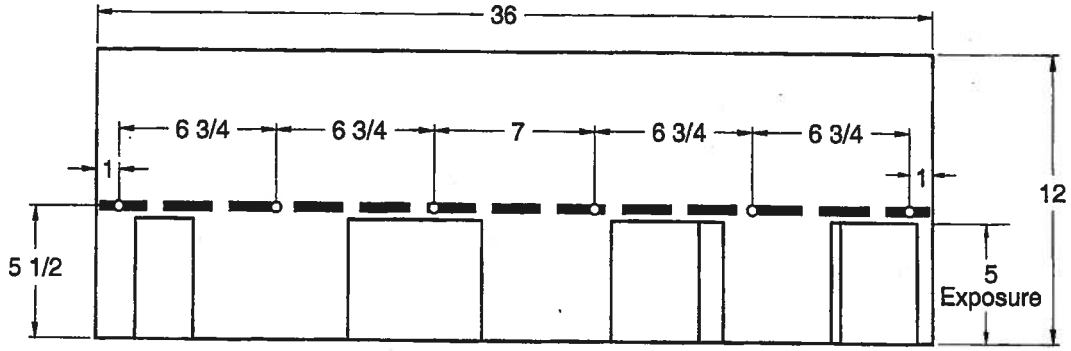

HERITAGE XL

12" x 36" LAMINATED SHINGLE
All dimensions are in inches.

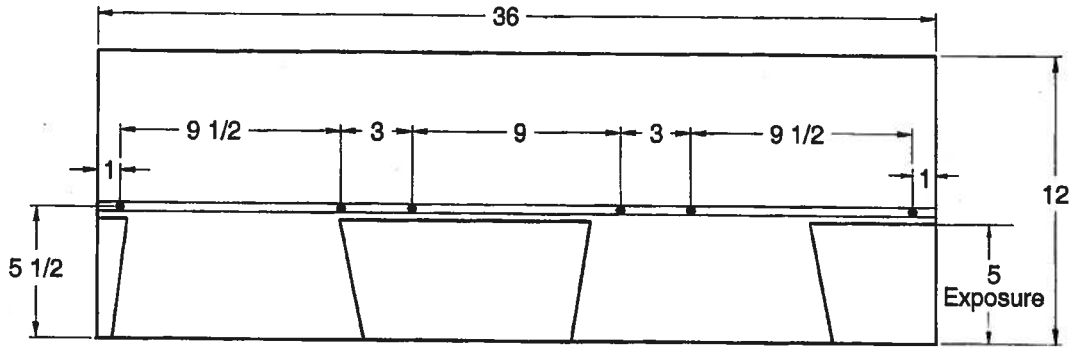

END OF THIS ACCEPTANCE

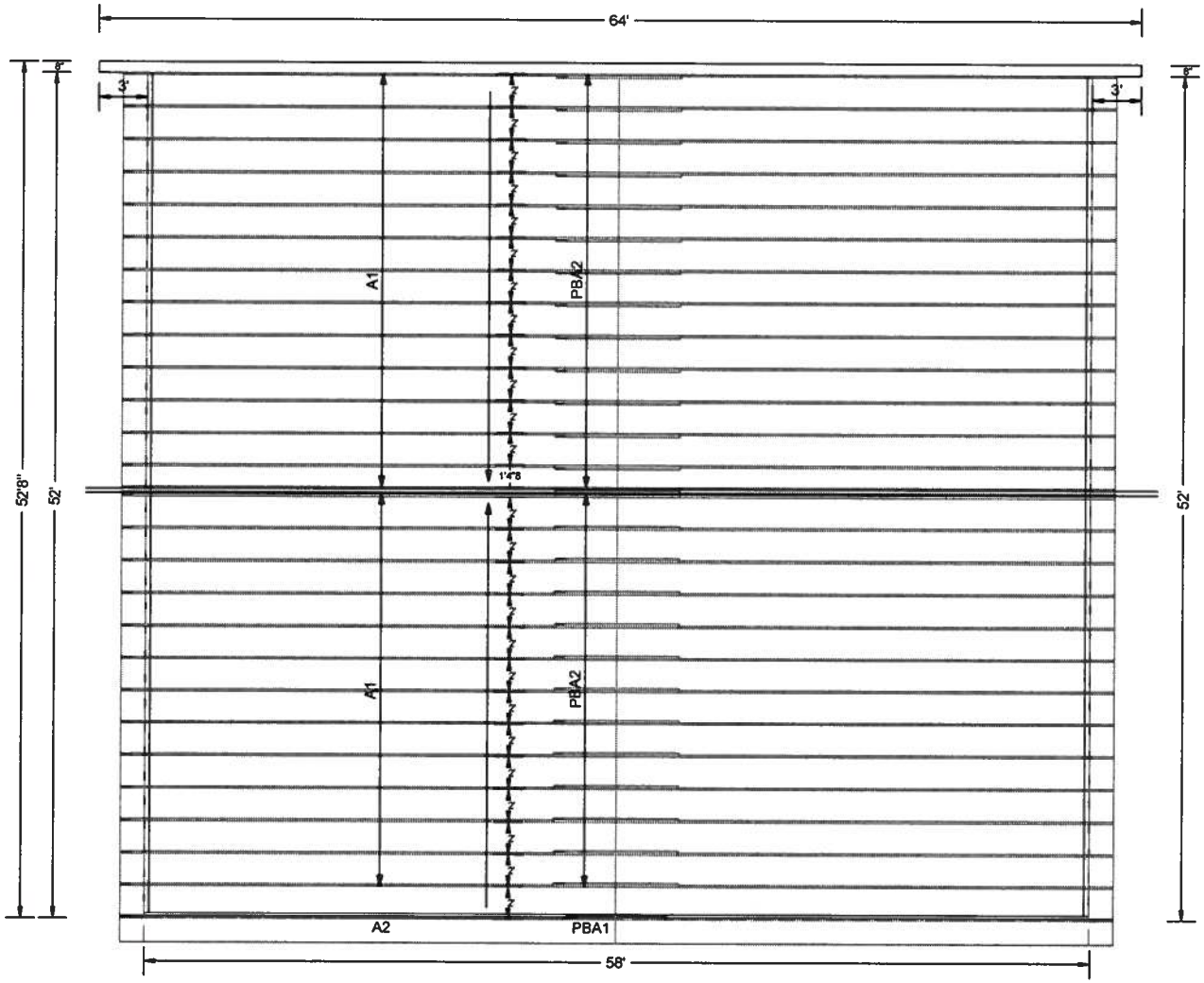

W.B. Howland Truss Co.
P.O. Box 700
Live Oak, FL 32064
(386) 362-1235
(386) 362-7124 (fax)

ROOF PITCH:	5/12
CLG PITCH:	FLAT
OVERHANG:	24" CANTILEVER
LOADING:	40 PSF T.L./STANDARD
WIND LOAD:	110 MPH/ENCLOSED
EXT WALLS:	2x4 FRAMING
DATE:	6-6-07

Roof Plane Sheathing Area = 3535 sq. ft
Gable Sheathing Area = 361 sq. ft
Total Sheathing Area = 3897 sq. ft
Fascia Material = 173 linear ft
Valley Flashing Material = 0 linear ft
Ridge Cap Material = 54 linear ft
Hip Ridge Material = 0 linear ft

Job Name: Celebration Community Chu
Customer: J.L. DUPREE
Designer: Chris McCall

JOB NO:
3922

PAGE NO:
1 OF 1

ITW Building Components Group, Inc.

1950 Marley Drive Haines City, FL 33844
Florida Engineering Certificate of Authorization Number: 567
Florida Certificate of Product Approval # FL1999
 Document ID:1TA2215-Z0620155237

Truss Fabricator:	W.B. Howland
Job Identification:	3922-/Celebration Community Chu /J.L. DUPREE -- LAKE CITY, FL
Truss Count:	4
Model Code:	Florida Building Code 2004 and 2006 Supplement
Truss Criteria:	ANSI/TPI-2002(STD)/FBC
Engineering Software:	Alpine Software,Version 7.36.
Structural Engineer of Record:	The identity of the structural EOR did not exist as of
Address:	the seal date per section 61G15-31.003(5a) of the FAC
Minimum Design Loads:	Roof - 40.0 PSF @ 1.25 Duration
	Floor - N/A
	Wind - 110 MPH ASCE 7-02 -Closed

Seal Date: 08/20/2007

-Truss Design Engineer-
James F. Collins Jr.
Florida License Number: 52212
1950 Marley Drive
Haines City, FL 33844

Notes:

1. Determination as to the suitability of these truss components for the structure is the responsibility of the building designer/engineer of record, as defined in ANSI/TPI 1
2. The drawing date shown on this index sheet must match the date shown on the individual truss component drawing.
3. As shown on attached drawings; the drawing number is preceded by: HCUSR215

Details: BRCLBSUB-GBLLETIN-

#	Ref Description	Drawing#	Date
1	21371--A1	07232043	08/20/07
2	21372--A2	07232044	08/20/07
3	21373--PBA1	07232045	08/20/07
4	21374--PBA2	07232046	08/20/07

THIS DWG PREPARED FROM COMPUTER INPUT (LOADS & DIMENSIONS) SUBMITTED BY TRUSS MFR.

Top chord 2x6 SP #2 N
Bot chord 2x4 SP #2 N :B1, B5 2x4 SP SS:
Webs 2x4 SP #2 N

Calculated horizontal deflection is 0.17" due to live load and 0.18" due to dead load.

In lieu of structural panels use purlins to brace all flat TC @ 24" OC.

WARNING: Furnish a copy of this DWG to the installation contractor. Special care must be taken during handling, shipping and installation of trusses. See "WARNING" note below.

110 mph wind, 15.00 ft mean hgt, ASCE 7-02, CLOSED bldg, Located anywhere in roof, CAT III OR IV, EXP C, wind TC DL=5.0 psf, wind BC DL=5.0 psf. Iw=1.15 GCpi(+/-)=0.18

Wind reactions based on MWFRS pressures.

(A) Continuous lateral bracing equally spaced on member.

Deflection meets L/240 live and L/180 total load.

The overall height of this truss excluding overhang is 11-0-0.

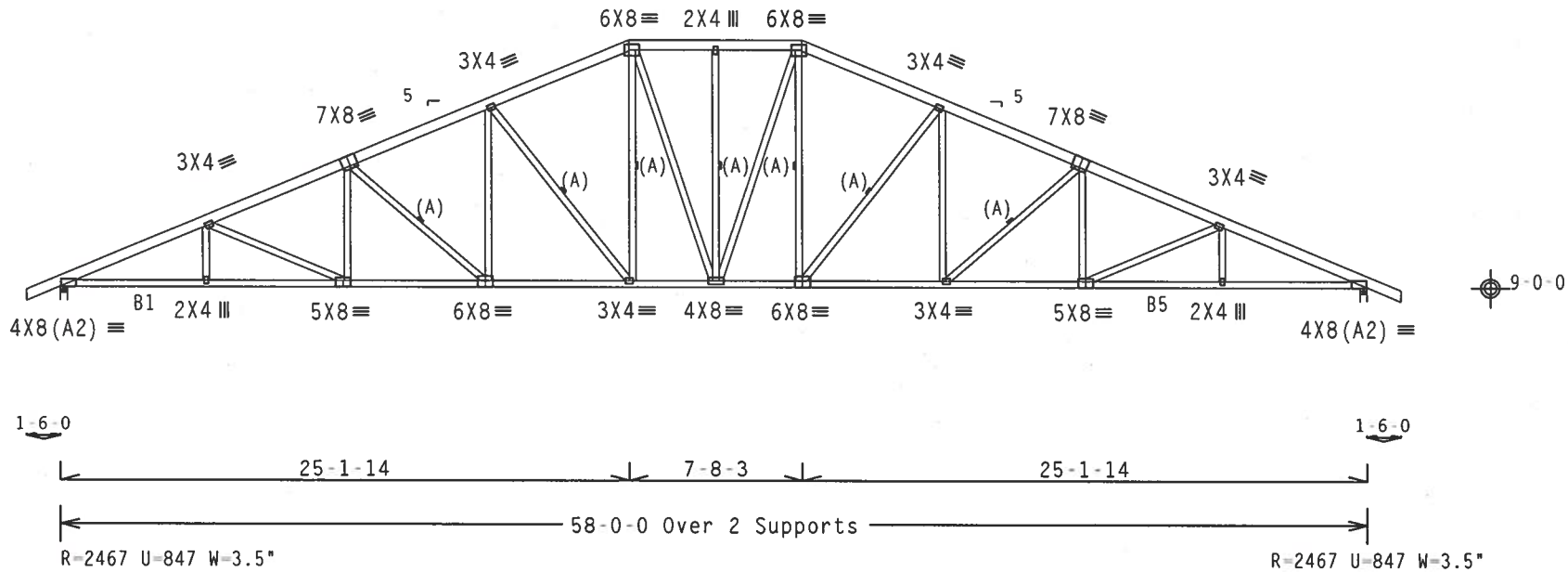

Design Crit: TPI-2002(STD)/FBC

PLT TYP. Wave | Cq/RT=1.00(1.25)/10(0) 7.36.0424.12 | QTY:27 FL/-/5/-/-/R/- | Scale =.125"/Ft.

ALPINE
ITW Building Components Group, Inc.
Haines City, FL 33844
FL Certificate of Authorization # 567

WARNING TRUSSES REQUIRE EXTREME CARE IN FABRICATION, HANDLING, SHIPPING, INSTALLING AND BRACING. REFER TO BCSI (BUILDING COMPONENT SAFETY INFORMATION), PUBLISHED BY TPI (TRUSS PLATE INSTITUTE, 218 NORTH LEE STREET, SUITE 312, ALEXANDRIA, VA, 22314) AND WTCA (WOOD TRUSS COUNCIL OF AMERICA, 6300 ENTERPRISE LANE, MADISON, WI 53719) FOR SAFETY PRACTICES PRIOR TO PERFORMING THESE FUNCTIONS. UNLESS OTHERWISE INDICATED TOP CHORD SHALL HAVE PROPERLY ATTACHED STRUCTURAL PANELS AND BOTTOM CHORD SHALL HAVE A PROPERLY ATTACHED RIGID CEILING.

IMPORTANTFURNISH A COPY OF THIS DESIGN TO THE INSTALLATION CONTRACTOR. ITW BCG, INC. SHALL NOT BE RESPONSIBLE FOR ANY DEVIATION FROM THIS DESIGN; ANY FAILURE TO BUILD THE TRUSS IN CONFORMANCE WITH TPI; OR FABRICATING, HANDLING, SHIPPING, INSTALLING & BRACING OF TRUSSES.
DESIGN CONFORMS WITH APPLICABLE PROVISIONS OF NDS (NATIONAL DESIGN SPEC. BY AF&PA) AND TPI. ITW BCG CONNECTOR PLATES ARE MADE OF 20/18/16GA (W,H/SS/K) ASTM A653 GRADE 40/60 (W, K/H,SS) GALV. STEEL. APPLY PLATES TO EACH FACE OF TRUSS AND, UNLESS OTHERWISE LOCATED ON THIS DESIGN, POSITION PER DRAWINGS 160A-Z. ANY INSPECTION OF PLATES FOLLOWED BY (I) SHALL BE PER ANNEX A3 OF TPI1-2002 SEC.3. A SEAL ON THIS DRAWING INDICATES ACCEPTANCE OF PROFESSIONAL ENGINEERING RESPONSIBILITY SOLELY FOR THE TRUSS COMPONENT DESIGN SHOWN. THE SUITABILITY AND USE OF THIS COMPONENT FOR ANY BUILDING IS THE RESPONSIBILITY OF THE BUILDING DESIGNER PER ANSI/TPI 1 SEC. 2.

JAMES F. COLLINS, JR. LICENSE No. 52212 STATE OF FLORIDA PROFESSIONAL ENGINEER
Aug 2

TC LL	20.0 PSF	REF R215-- 21371
TC DL	10.0 PSF	DATE 08/20/07
BC DL	10.0 PSF	DRW HCUSR215 07232043
BC LL	0.0 PSF	HC-ENG RA/WHK
TOT.LD.	40.0 PSF	SEQN- 181980
DUR.FAC.	1.25	FROM CDM
SPACING	24.0"	JREF- 1TA2215_Z06

THIS DWG PREPARED FROM COMPUTER INPUT (LOADS & DIMENSIONS) SUBMITTED BY TRUSS MFR.

Top chord 2x6 SP #2 N
Bot chord 2x4 SP #2 N
Webs 2x4 SP #2 N

(A) Continuous lateral bracing equally spaced on member.

Deflection meets L/240 live and L/180 total load.

The overall height of this truss excluding overhang is 11-0-0.

SEE DWGS A11015EE0207 FOR ADDITIONAL REQUIREMENTS.

THE BUILDING DESIGNER IS RESPONSIBLE FOR THE DESIGN OF THE ROOF AND CEILING DIAPHRAGMS, GABLE END SHEAR WALLS, AND SUPPORTING SHEAR WALLS. SHEAR WALLS MUST PROVIDE CONTINUOUS LATERAL RESTRAINT TO THE GABLE END. ALL CONNECTIONS TO BE DESIGNED BY THE BUILDING DESIGNER.

110 mph wind, 15.00 ft mean hgt, ASCE 7-02, CLOSED bldg, Located anywhere in roof, CAT III OR IV, EXP C, wind TC DL=5.0 psf, wind BC DL=5.0 psf. Iw=1.15 GCpi(+/-)=0.18

Wind reactions based on MWFRS pressures.

See DWG GBLLETIN0207 for more requirements.

In lieu of structural panels use purlins to brace all flat TC @ 24" OC.

WARNING: Furnish a copy of this DWG to the installation contractor. Special care must be taken during handling, shipping and installation of trusses. See "WARNING" note below.

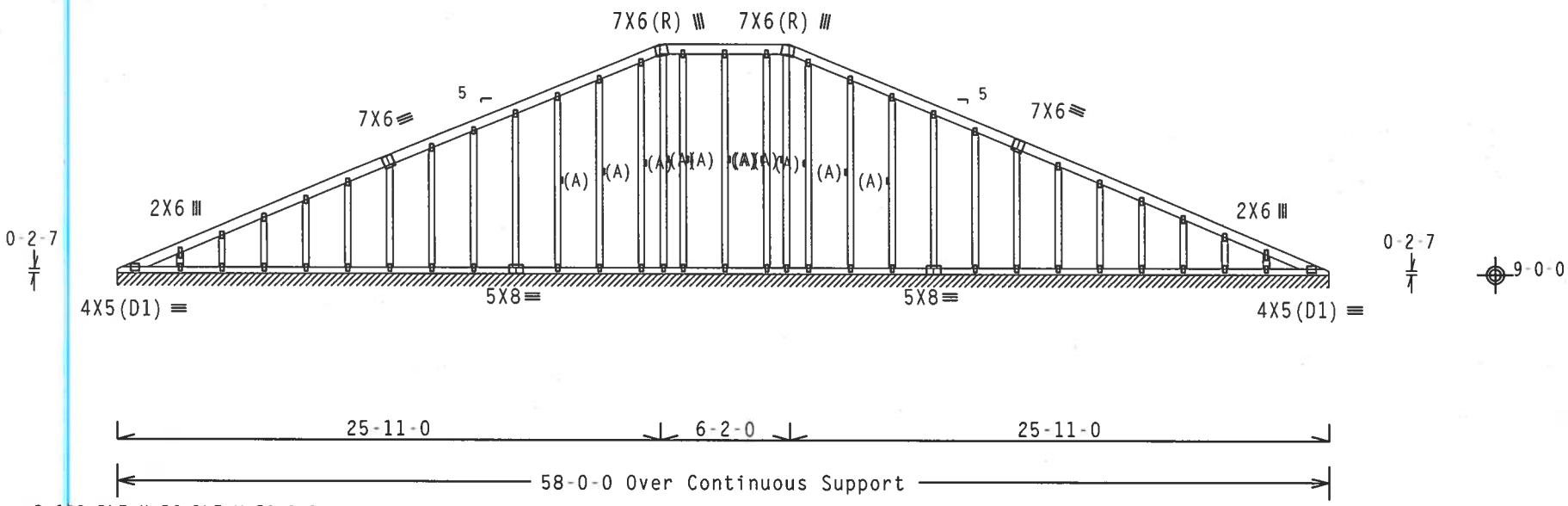

R=133 PLF U=56 PLF W=58-0-0

Note: All Plates Are 2X4 Except As Shown.

Design Crit: TPI-2002(STD)/FBC

PLT TYP. Wave Cq/RT=1.00(1.25)/10(0) 7.36.0424 12 QTY:1 FL/-/5/-/-/R/- Scale =.125"/Ft.

ALPINE
ITW Building Components Group, Inc.
Haines City, FL 33844
FL Certificate of Authorization # 567

WARNING TRUSSES REQUIRE EXTREME CARE IN FABRICATION, HANDLING, SHIPPING, INSTALLING AND BRACING. REFER TO BCSI (BUILDING COMPONENT SAFETY INFORMATION), PUBLISHED BY TPI (TRUSS PLATE INSTITUTE, 218 NORTH LEE STREET, SUITE 312, ALEXANDRIA, VA. 22314) AND WTCA (WOOD TRUSS COUNCIL OF AMERICA, 6300 ENTERPRISE LANE, MADISON, WI 53719) FOR SAFETY PRACTICES PRIOR TO PERFORMING THESE FUNCTIONS. UNLESS OTHERWISE INDICATED TOP CHORD SHALL HAVE PROPERLY ATTACHED STRUCTURAL PANELS AND BOTTOM CHORD SHALL HAVE A PROPERLY ATTACHED RIGID CEILING.

IMPORTANTFURNISH A COPY OF THIS DESIGN TO THE INSTALLATION CONTRACTOR. ITW BCG, INC. SHALL NOT BE RESPONSIBLE FOR ANY DEVIATION FROM THIS DESIGN; ANY FAILURE TO BUILD THE TRUSS IN CONFORMANCE WITH TPI; OR FABRICATING, HANDLING, SHIPPING, INSTALLING & BRACING OF TRUSSES. DESIGN CONFORMS WITH APPLICABLE PROVISIONS OF NDS (NATIONAL DESIGN SPEC. BY AF&PA) AND TPI. ITW BCG CONNECTOR PLATES ARE MADE OF 20/18/16GA (W,H/SS/K) ASTM A653 GRADE 40/60 (W, K/H,SS) GALV. STEEL. APPLY PLATES TO EACH FACE OF TRUSS AND, UNLESS OTHERWISE LOCATED ON THIS DESIGN, POSITION PER DRAWINGS 160A-Z. ANY INSPECTION OF PLATES FOLLOWED BY (I) SHALL BE PER ANNEX A3 OF TPI1-2002 SEC.3. A SEAL ON THIS DRAWING INDICATES ACCEPTANCE OF PROFESSIONAL ENGINEERING RESPONSIBILITY SOLELY FOR THE TRUSS COMPONENT DESIGN SHOWN. THE SUITABILITY AND USE OF THIS COMPONENT FOR ANY BUILDING IS THE RESPONSIBILITY OF THE BUILDING DESIGNER PER ANSI/TPI 1 SEC. 2.

JAMES F. COLLINS, JR. LICENSE No. 52212 STATE OF FLORIDA PROFESSIONAL ENGINEER
Aug

TC LL	20.0 PSF	REF R215-- 21372
TC DL	10.0 PSF	DATE 08/20/07
BC DL	10.0 PSF	DRW HCUSR215 07232044
BC LL	0.0 PSF	HC-ENG RA/WHK
TOT.LD.	40.0 PSF	SEQN- 181974
DUR.FAC.	1.25	FROM CDM
SPACING	24.0"	JREF- 1TA2215_Z06

THIS DWG PREPARED FROM COMPUTER INPUT (LOADS & DIMENSIONS) SUBMITTED BY TRUSS MFR.

Top chord 2x4 SP #2 N
Bot chord 2x4 SP #2 N
Webs 2x4 SP #2 N

Wind reactions based on MWFRS pressures.

In lieu of rigid ceiling use purlins to brace BC @ 24" OC.

The overall height of this truss excluding overhang is 1-3-7.

REFER TO DRAWING PIGBACKB0207 FOR PIGGYBACK DETAILS.
TOP CHORD OF SUPPORTING TRUSS UNDER PIGGYBACK TO
BE BRACED AT 24" O.C.

SEE DWGS A11015EE0207 FOR ADDITIONAL REQUIREMENTS.

110 mph wind, 20.65 ft mean hgt, ASCE 7-02, CLOSED bldg, Located anywhere in roof, CAT III OR IV, EXP C, wind TC DL=5.0 psf, wind BC DL=2.0 psf. Iw=1.15 GCpi(+/-)=0.18

Gable end supports 8" max rake overhang.

See DWG GBLLETIN0207 for more requirements.

Deflection meets L/240 live and L/180 total load.

THE BUILDING DESIGNER IS RESPONSIBLE FOR THE DESIGN OF THE ROOF AND CEILING DIAPHRAGMS, GABLE END SHEAR WALLS, AND SUPPORTING SHEAR WALLS. SHEAR WALLS MUST PROVIDE CONTINUOUS LATERAL RESTRAINT TO THE GABLE END. ALL CONNECTIONS TO BE DESIGNED BY THE BUILDING DESIGNER.

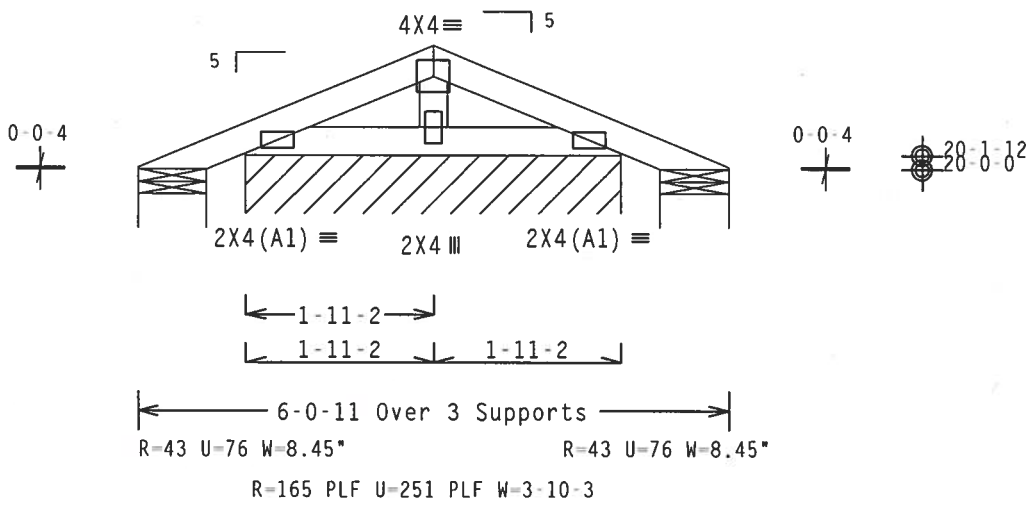

Design Crit: TPI-2002(STD)/FBC
Cq/RT=1.00(1.25)/10(0) 7.36.0424 1a

PLT TYP. Wave QTY:1 FL/-/5/-/-/R/- Scale =.5"/Ft.

ALPINE
ITW Building Components Group, Inc.
Haines City, FL 33844
FL Certificate of Authorization # 567

WARNING TRUSSES REQUIRE EXTREME CARE IN FABRICATION, HANDLING, SHIPPING, INSTALLING AND BRACING. REFER TO BCSI (BUILDING COMPONENT SAFETY INFORMATION), PUBLISHED BY TPI (TRUSS PLATE INSTITUTE, 218 NORTH LEE STREET, SUITE 312, ALEXANDRIA, VA, 22314) AND WTCA (WOOD TRUSS COUNCIL OF AMERICA, 6300 ENTERPRISE LANE, MADISON, WI 53719) FOR SAFETY PRACTICES PRIOR TO PERFORMING THESE FUNCTIONS. UNLESS OTHERWISE INDICATED TOP CHORD SHALL HAVE PROPERLY ATTACHED STRUCTURAL PANELS AND BOTTOM CHORD SHALL HAVE A PROPERLY ATTACHED RIGID CEILING.

IMPORTANT FURNISH A COPY OF THIS DESIGN TO THE INSTALLATION CONTRACTOR. ITW BCG, INC. SHALL NOT BE RESPONSIBLE FOR ANY DEVIATION FROM THIS DESIGN; ANY FAILURE TO BUILD THE TRUSS IN CONFORMANCE WITH TPI; OR FABRICATING, HANDLING, SHIPPING, INSTALLING & BRACING OF TRUSSES.
DESIGN CONFORMS WITH APPLICABLE PROVISIONS OF NDS (NATIONAL DESIGN SPEC. BY AF&PA) AND TPI. ITW BCG CONNECTOR PLATES ARE MADE OF 20/18/16GA (W,H/SS/K) ASTM A653 GRADE 40/60 (W, K/H,SS) GALV. STEEL. APPLY PLATES TO EACH FACE OF TRUSS AND, UNLESS OTHERWISE LOCATED ON THIS DESIGN, POSITION PER DRAWINGS 160A-Z. ANY INSPECTION OF PLATES FOLLOWED BY (I) SHALL BE PER ANNEX A3 OF TPI1-2002 SEC.3. A SEAL ON THIS DRAWING INDICATES ACCEPTANCE OF PROFESSIONAL ENGINEERING RESPONSIBILITY SOLELY FOR THE TRUSS COMPONENT DESIGN SHOWN. THE SUITABILITY AND USE OF THIS COMPONENT FOR ANY BUILDING IS THE RESPONSIBILITY OF THE BUILDING DESIGNER PER ANSI/TPI 1 SEC. 2.

JAMES F. COLLINS JR. LICENSED No. 52212 STATE OF FLORIDA PROFESSIONAL ENGINEER
Aug 20-07

TC LL	20.0 PSF	REF	R215-- 21373
TC DL	10.0 PSF	DATE	08/20/07
BC DL	10.0 PSF	DRW	HCUSR215 07232045
BC LL	0.0 PSF	HC-ENG	RA/WHK
TOT.LD.	40.0 PSF	SEQN-	181967
DUR.FAC.	1.25	FROM	CDM
SPACING	24.0"	JREF-	1TA2215_Z06

THIS DWG PREPARED FROM COMPUTER INPUT (LOADS & DIMENSIONS) SUBMITTED BY TRUSS MFR.

Top chord 2x4 SP #2 N
Bot chord 2x4 SP #2 N
Webs 2x4 SP #2 N

Deflection meets L/240 live and L/180 total load.

REFER TO DRAWING PIGBACKB0207 FOR PIGGYBACK DETAILS. TOP CHORD OF SUPPORTING TRUSS UNDER PIGGYBACK TO BE BRACED AT 24" O.C.

110 mph wind, 20.65 ft mean hgt, ASCE 7-02, CLOSED bldg, Located anywhere in roof, CAT III OR IV, EXP C, wind TC DL=5.0 psf, wind BC DL=2.0 psf. Iw=1.15 GCpi(+/-)=0.18

In lieu of rigid ceiling use purlins to brace BC @ 24" OC.

The overall height of this truss excluding overhang is 1-7-3.

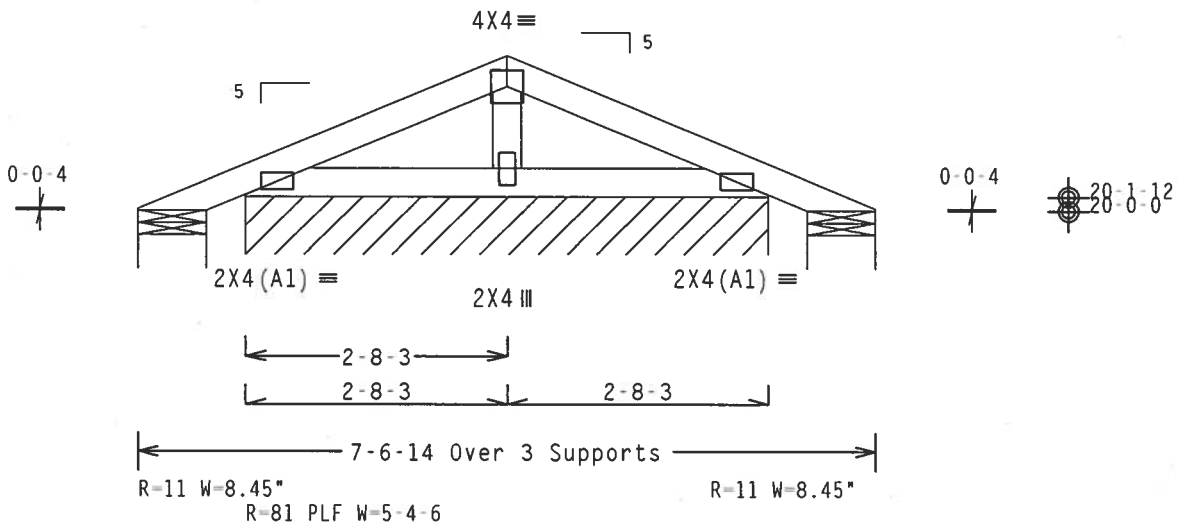

Design Crit: TPI-2002(STD)/FBC
Cq/RT=1.00(1.25)/10(0) 7.36.0424

PLT TYP. Wave

QTY:27 FL/-/5/-/-/R/-

Scale =.5"/Ft.

ALPINE
ITW Building Components Group, Inc.
Haines City, FL 33844
FL Certificate of Authorization # 567

WARNING TRUSSES REQUIRE EXTREME CARE IN FABRICATION, HANDLING, SHIPPING, INSTALLING AND BRACING. REFER TO BCSI (BUILDING COMPONENT SAFETY INFORMATION), PUBLISHED BY TPI (TRUSS PLATE INSTITUTE, 218 NORTH LEE STREET, SUITE 312, ALEXANDRIA, VA, 22314) AND WTCA (WOOD TRUSS COUNCIL OF AMERICA, 6300 ENTERPRISE LANE, MADISON, WI 53719) FOR SAFETY PRACTICES PRIOR TO PERFORMING THESE FUNCTIONS. UNLESS OTHERWISE INDICATED TOP CHORD SHALL HAVE PROPERLY ATTACHED STRUCTURAL PANELS AND BOTTOM CHORD SHALL HAVE A PROPERLY ATTACHED RIGID CEILING.

IMPORTANT FURNISH A COPY OF THIS DESIGN TO THE INSTALLATION CONTRACTOR. ITW BCG, INC. SHALL NOT BE RESPONSIBLE FOR ANY DEVIATION FROM THIS DESIGN; ANY FAILURE TO BUILD THE TRUSS IN CONFORMANCE WITH TPI; OR FABRICATING, HANDLING, SHIPPING, INSTALLING & BRACING OF TRUSSES. DESIGN CONFORMS WITH APPLICABLE PROVISIONS OF NDS (NATIONAL DESIGN SPEC. BY AF&PA) AND TPI. ITW BCG CONNECTOR PLATES ARE MADE OF 20/18/16GA (W,H/SS/K) ASTM A653 GRADE 40/60 (W, K/H,SS) GALV. STEEL. APPLY PLATES TO EACH FACE OF TRUSS AND, UNLESS OTHERWISE LOCATED ON THIS DESIGN, POSITION PER DRAWINGS 160A-2. ANY INSPECTION OF PLATES FOLLOWED BY (1) SHALL BE PER ANNEX A3 OF TPI1-2002 SEC.3. A SEAL ON THIS DRAWING INDICATES ACCEPTANCE OF PROFESSIONAL ENGINEERING RESPONSIBILITY SOLELY FOR THE TRUSS COMPONENT DESIGN SHOWN. THE SUITABILITY AND USE OF THIS COMPONENT FOR ANY BUILDING IS THE RESPONSIBILITY OF THE BUILDING DESIGNER PER ANSI/TPI 1 SEC. 2.

JAMES F. COLLINS JR. LICENSE No. 52212 STATE OF FLORIDA PROFESSIONAL ENGINEER

Aug 20 07

TC LL	20.0 PSF	REF	R215-- 21374
TC DL	10.0 PSF	DATE	08/20/07
BC DL	10.0 PSF	DRW	HCUSR215 07232046
BC LL	0.0 PSF	HC-ENG	RA/WHK
TOT.LD.	40.0 PSF	SEQN-	181970
DUR.FAC.	1.25	FROM	CDM
SPACING	24.0"	JREF-	1TA2215_Z06

CLB WEB BRACE SUBSTITUTION

THIS DETAIL IS TO BE USED WHEN CONTINUOUS LATERAL BRACING (CLB) IS SPECIFIED ON AN ALPINE TRUSS DESIGN BUT AN ALTERNATIVE WEB BRACING METHOD IS DESIRED.

NOTES:

THIS DETAIL IS ONLY APPLICABLE FOR CHANGING THE SPECIFIED CLB SHOWN ON SINGLE PLY SEALED DESIGNS TO T-BRACING OR SCAB BRACING.

ALTERNATIVE BRACING SPECIFIED IN CHART BELOW MAY BE CONSERVATIVE. FOR MINIMUM ALTERNATIVE BRACING, RE-RUN DESIGN WITH APPROPRIATE BRACING.

WEB MEMBER SIZE	SPECIFIED CLB BRACING	ALTERNATIVE BRACING T OR L-BRACE	ALTERNATIVE BRACING SCAB BRACE
2X3 OR 2X4	1 ROW	2X4	1-2X4
2X3 OR 2X4	2 ROWS	2X6	2-2X4
2X6	1 ROW	2X4	1-2X6
2X6	2 ROWS	2X6	2-2X4(*)
2X8	1 ROW	2X6	1-2X8
2X8	2 ROWS	2X6	2-2X6(*)

T-BRACE, L-BRACE AND SCAB BRACE TO BE SAME SPECIES AND GRADE OR BETTER THAN WEB MEMBER UNLESS SPECIFIED OTHERWISE ON ENGINEER'S SEALED DESIGN.

(*) CENTER SCAB ON WIDE FACE OF WEB. APPLY (1) SCAB TO EACH FACE OF WEB.

T-BRACING OR L-BRACING:

APPLY TO EITHER SIDE OF WEB NARROW FACE. ATTACH WITH 10d BOX OR GUN (0.128"x 3.",MIN) NAILS. AT 6" O.C. BRACE IS A MINIMUM 80% OF WEB MEMBER LENGTH

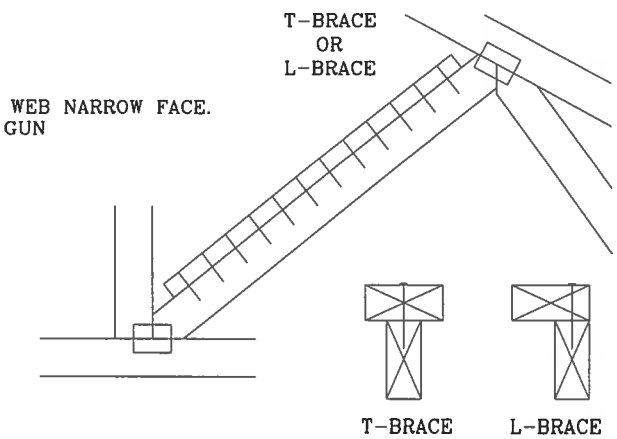

SCAB BRACING:

APPLY SCAB(S) TO WIDE FACE OF WEB. NO MORE THAN (1) SCAB PER FACE. ATTACH WITH 10d BOX OR GUN (0.128"x 3.",MIN) NAILS. AT 6" O.C. BRACE IS A MINIMUM 80% OF WEB MEMBER LENGTH

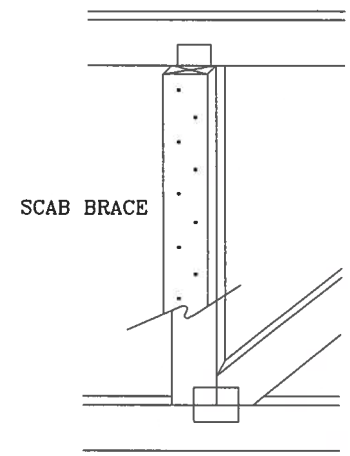

THIS DRAWING REPLACES DRAWING 579,640

ALPINE

ITW BUILDING COMPONENTS GROUP, INC.
POMPANO BEACH, FLORIDA

WARNING TRUSSES REQUIRE EXTREME CARE IN FABRICATING, HANDLING, SHIPPING, INSTALLING AND BRACING. REFER TO BCSI (BUILDING COMPONENT SAFETY INFORMATION), PUBLISHED BY TPI (TRUSS PLATE INSTITUTE, 218 NORTH LEE STR., SUITE 312, ALEXANDRIA, VA. 22314) AND WTCA (WOOD TRUSS COUNCIL OF AMERICA, 6300 ENTERPRISE LN, MADISON, WI 53719) FOR SAFETY PRACTICES PRIOR TO PERFORMING THESE FUNCTIONS. UNLESS OTHERWISE INDICATED, TOP CHORD SHALL HAVE PROPERLY ATTACHED STRUCTURAL PANELS AND BOTTOM CHORD SHALL HAVE A PROPERLY ATTACHED RIGID CEILING.

IMPORTANT FURNISH COPY OF THIS DESIGN TO INSTALLATION CONTRACTOR. ITW BCG, INC., SHALL NOT BE RESPONSIBLE FOR ANY DEVIATION FROM THIS DESIGN; ANY FAILURE TO BUILD THE TRUSS IN CONFORMANCE WITH TPI; OR FABRICATING, HANDLING, SHIPPING, INSTALLING & BRACING OF TRUSSES. DESIGN CONFORMS WITH APPLICABLE PROVISIONS OF NDS (NATIONAL DESIGN SPEC, BY AF&PA) AND TPI. ITW, BCG CONNECTOR PLATES ARE MADE OF 20/18/16GA (W,H/SS/K) ASTM A653 GRADE 40/60 (W,K/H,SS) GALV. STEEL. APPLY PLATES TO EACH FACE OF TRUSS AND, UNLESS OTHERWISE LOCATED ON THIS DESIGN, POSITION PER DRAWINGS 160A-Z. ANY INSPECTION OF PLATES FOLLOWED BY (I) SHALL BE PER ANNEX A3 OF TPI 1-2002 SEC. 3. A SEAL ON THIS DRAWING INDICATES ACCEPTANCE OF PROFESSIONAL ENGINEERING RESPONSIBILITY SOLELY FOR THE TRUSS COMPONENT DESIGN SHOWN. THE SUITABILITY AND USE OF THIS COMPONENT FOR ANY BUILDING IS THE RESPONSIBILITY OF THE BUILDING DESIGNER, PER ANSI/TPI 1 SEC. 2.

JAMES F. COLLINS, JR. LICENSE No. 52212 STATE OF FLORIDA PROFESSIONAL ENGINEER

TC LL	PSF	REF	CLB SUBST.
TC DL	PSF	DATE	2/23/07
BC DL	PSF	DRWG	BRCLBSUB0207
BC LL	PSF	-ENG	MLH/KAR
TOT. LD.	PSF		
DUR. FAC.			
SPACING			

GABLE DETAIL
FOR LET-IN VERTICALS

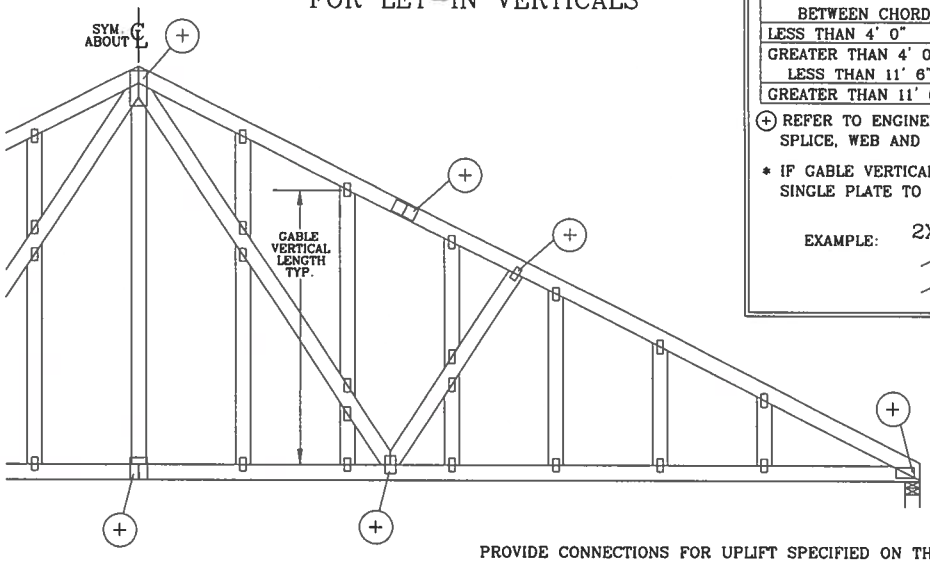

GABLE VERTICAL PLATE SIZES		
VERTICAL LENGTH BETWEEN CHORDS	PLATE SIZE	IF PLATES OVERLAP*
LESS THAN 4' 0"	1X4 OR 2X3	2X8
GREATER THAN 4' 0", BUT LESS THAN 11' 6"	2X4	2X8
GREATER THAN 11' 6"	2.5X4	2.5X8

(+) REFER TO ENGINEERED TRUSS DESIGN FOR PEAK, SPLICE, WEB AND HEEL PLATES.

* IF GABLE VERTICAL PLATES OVERLAP, USE A SINGLE PLATE TO SPAN THE WEB.

EXAMPLE:

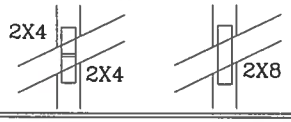

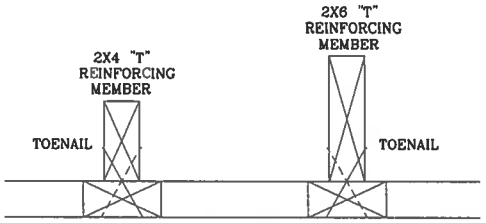

TO CONVERT FROM "L" TO "T" REINFORCING MEMBERS, MULTIPLY "T" FACTOR BY LENGTH (BASED ON GABLE VERTICAL SPECIES, GRADE AND SPACING) FOR (1) 2X4 "L" BRACE, GROUP A, OBTAINED FROM THE APPROPRIATE ALPINE GABLE DETAIL FOR ASCE OR SBCCI WIND LOAD.

MAXIMUM ALLOWABLE "T" REINFORCED GABLE VERTICAL LENGTH IS 14' FROM TOP TO BOTTOM CHORD.

WEB LENGTH INCREASE W/ "T" BRACE

WIND SPEED AND MRH	"T" REINF. MBR. SIZE	SBCCI	ASCE
110 MPH	2x4	10 %	10 %
15 FT	2x6	40 %	50 %
110 MPH	2x4	10 %	10 %
30 FT	2x6	50 %	50 %
100 MPH	2x4	10 %	10 %
15 FT	2x6	30 %	50 %
100 MPH	2x4	10 %	10 %
30 FT	2x6	40 %	40 %
90 MPH	2x4	20 %	10 %
15 FT	2x6	20 %	40 %
90 MPH	2x4	10 %	10 %
30 FT	2x6	30 %	50 %
80 MPH	2x4	10 %	20 %
15 FT	2x6	10 %	30 %
80 MPH	2x4	20 %	10 %
30 FT	2x6	20 %	40 %
70 MPH	2x4	0 %	20 %
15 FT	2x6	0 %	20 %
70 MPH	2x4	10 %	20 %
30 FT	2x6	10 %	30 %

EXAMPLE:
ASCE WIND SPEED = 100 MPH
MEAN ROOF HEIGHT = 30 FT
GABLE VERTICAL = 24" O.C. SP #3
"T" REINFORCING MEMBER SIZE = 2X4
"T" BRACE INCREASE (FROM ABOVE) = 10% = 1.10
(1) 2X4 "L" BRACE LENGTH = 6' 7"
MAXIMUM "T" REINFORCED GABLE VERTICAL LENGTH
1.10 x 6' 7" = 7' 3"

PROVIDE CONNECTIONS FOR UPLIFT SPECIFIED ON THE ENGINEERED TRUSS DESIGN.

ATTACH EACH "T" REINFORCING MEMBER WITH
HAND DRIVEN NAILS:
10d COMMON (0.148"X 3.",MIN) TOENAILS AT 4" O.C. PLUS
(4) 16d COMMON (0.162" X 3.5",MIN) TOENAILS IN TOP AND BOTTOM CHORD.
GUN DRIVEN NAILS:
8d COMMON (0.131"X 2.5",MIN) TOENAILS AT 4" O.C. PLUS
(4) TOENAILS IN TOP AND BOTTOM CHORD.

THIS DETAIL TO BE USED WITH THE APPROPRIATE ALPINE GABLE DETAIL FOR ASCE OR SBCCI WIND LOAD.
ASCE 7-93 GABLE DETAIL DRAWINGS
A11015EN0207, A10015EN0207, A09015EN0207, A08015EN0207, A07015EN0207, A11030EN0207, A10030EN0207, A09030EN0207, A08030EN0207, A07030EN0207
ASCE 7-98 GABLE DETAIL DRAWINGS
A13015EC0207, A12015EC0207, A11015EC0207, A10015EC0207, A08515EC0207, A13030EC0207, A12030EC0207, A11030EC0207, A10030EC0207, A08530EC0207
ASCE 7-02 GABLE DETAIL DRAWINGS
A13015EE0207, A12015EE0207, A11015EE0207, A10015EE0207, A08515EE0207, A13030EE0207, A12030EE0207, A11030EE0207, A10030EE0207, A08530EE0207
ASCE 7-05 GABLE DETAIL DRAWINGS
A13015E50207, A12015E50207, A11015E50207, A10015E50207, A08515E50207, A13030E50207, A12030E50207, A11030E50207, A10030E50207, A08530E50207

SEE APPROPRIATE ALPINE GABLE DETAIL (ASCE OR SBCCI WIND LOAD) FOR MAXIMUM UNREINFORCED GABLE VERTICAL LENGTH.

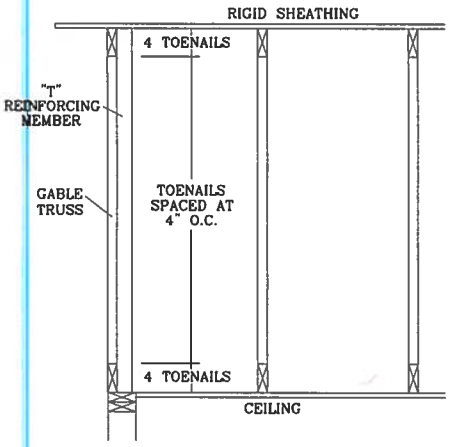

THIS DRAWING REPLACES DRAWINGS GAB98117 876,719 & HC26294035

ALPINE
ITW BUILDING COMPONENTS GROUP, INC.
POMPANO BEACH, FLORIDA

WARNING TRUSSES REQUIRE EXTREME CARE IN FABRICATING, HANDLING, SHIPPING, INSTALLING AND BRACING. REFER TO BCSI (BUILDING COMPONENT SAFETY INFORMATION), PUBLISHED BY TPI (TRUSS PLATE INSTITUTE, 218 NORTH LEE STR., SUITE 312, ALEXANDRIA, VA. 22314) AND WTCA (WOOD TRUSS COUNCIL OF AMERICA, 6300 ENTERPRISE LN, MADISON, WI 53719) FOR SAFETY PRACTICES PRIOR TO PERFORMING THESE FUNCTIONS. UNLESS OTHERWISE INDICATED, TOP CHORD SHALL HAVE PROPERLY ATTACHED STRUCTURAL PANELS AND BOTTOM CHORD SHALL HAVE A PROPERLY ATTACHED RIGID CEILING.

IMPORTANT FURNISH COPY OF THIS DESIGN TO INSTALLATION CONTRACTOR. ITW BCG, INC., SHALL NOT BE RESPONSIBLE FOR ANY DEVIATION FROM THIS DESIGN; ANY FAILURE TO BUILD THE TRUSS IN CONFORMANCE WITH TPI; OR FABRICATING, HANDLING, SHIPPING, INSTALLING & BRACING OF TRUSSES. DESIGN CONFORMS WITH APPLICABLE PROVISIONS OF NDS (NATIONAL DESIGN SPEC, BY AF&PA) AND TPI. ITW, BCG CONNECTOR PLATES ARE MADE OF 20/18/16GA (W,H/SS/K) ASTM A653 GRADE 40/60 (W/K/H,SS) GALV. STEEL. APPLY PLATES TO EACH FACE OF TRUSS AND, UNLESS OTHERWISE LOCATED ON THIS DESIGN, POSITION PER DRAWINGS 160A-Z. ANY INSPECTION OF PLATES FOLLOWED BY (I) SHALL BE PER ANNEX A3 OF TPI 1-2002 SEC. 3. A SEAL ON THIS DRAWING INDICATES ACCEPTANCE OF PROFESSIONAL ENGINEERING RESPONSIBILITY SOLELY FOR THE TRUSS COMPONENT DESIGN SHOWN. THE SUITABILITY AND USE OF THIS COMPONENT FOR ANY BUILDING IS THE RESPONSIBILITY OF THE BUILDING DESIGNER, PER ANSI/TPI 1 SEC. 2.

JAMES F. COLLINS, JR. LICENSE No. 52212 STATE OF FLORIDA PROFESSIONAL ENGINEER

MAX TOT. LD. 60 PSF
DUR. FAC. ANY
MAX SPACING 24.0"

REF	LET-IN VERT
DATE	2/23/07
DRWG	GBLLETIN0207
-ENG	DLJ/KAR

GEOTECHNICAL EXPLORATION
ADDITION TO CELEBRATION COMMUNITY CHURCH
FT. WHITE, COLUMBIA COUNTY, FLORIDA
CTI PROJECT NO. 07-00431

--- Prepared for ---

J.L. DuPree Construction Services, Inc.
P.O. Box 2861
Lake City, Florida 32607

--- Prepared by ---

Cal-Tech Testing, Inc.
P. O. Box 1625
Lake City, Florida 32056-1625

September 10, 2007

Cal-Tech Testing, Inc.

- Engineering
- Geotechnical
- Environmental

LABORATORIES

P.O. Box 1625 • Lake City, FL 32056 Tel. (386) 755-3633 • Fax (386) 752-5456
4784 Rosselle Street • Jacksonville, FL 32254 Tel. (904) 381-8901 • Fax (904) 381-8902
2230 Greensboro Highway • Quincy, FL 32351 Tel. (850) 442-3495 • Fax (850) 442-4008

September 10, 2007

J.L. DuPree Construction Services, Inc.
P.O. Box 2861
Lake City, Florida 32056

Attention: Mr. Lamar DuPree

Subject: Report of Geotechnical Exploration
Stage I, Phase II Addition to Celebration Community Church
Lake City, Florida
CTI project No. 07-00431

Dear Mr. DuPree:

Cal-Tech Testing, Inc. (CTI) has completed the geotechnical exploration for the Stage I, Phase II addition to the existing Celebration Community Church. Our services for this project were verbally authorized by you during your visit to our office on August 31, 2007. This report briefly outlines our understanding of the planned construction, describes the field exploration, presents the collected data, and provides our geotechnical engineering evaluation of the subsurface conditions, with respect to the planned construction and estimated structural loading conditions. Also included in this report are our recommendations for the design and construction of the building foundations.

Introduction

The purpose of this exploration was to develop information concerning the site and subsurface conditions in order to evaluate site preparation requirements and foundation support recommendations for the proposed addition to the Celebration Community Church, located in the southeastern quadrant of the intersection of Southwest Morning Star Glen and S.R. No. 47 in Columbia County, Florida. This exploration pertains to Stage I, Phase II addition to the existing church building.

We have been furnished Site and Foundation Plans prepared by Freeman Design Group, Inc. dated December 14, 2006 and April 11, 2007, respectively. This Stage I of Phase II expansion will consist of a one-story, wood-framed addition with an approximate footprint of 3,070 square foot. Currently, the ground surface is clear of trees and relatively level.

Detailed structural information has not been provide to us; however, we assume that bearing wall loads will not exceed 3 klf. We understand the floor slab will be supported by stem wall/continuous footing and not soil supported. We also anticipate that finished floor elevation will be at or near the existing ground surface with new earthwork fill not to exceed 3 feet to achieve desired finished subgrade elevations.

Field Program

Our field program consisted of performing four (4) Standard Penetration Test (SPT) borings within the proposed Stage I, Phase II addition. These borings were extended to a depth of 15 feet below the existing ground surface. All boring were performed on September 5, 2007 and were located in the field by our personnel using taped distances from existing site features (corners of existing buildings). The attached Field Exploration Plan indicates the approximate location of each SPT boring.

The sampling and penetration procedures of the **SPT** borings were accomplished in general accordance with **ASTM D-1586**, using a power rotary drill rig. The standard penetration tests were performed by driving a standard 1-3/8" I.D. and 2" O.D. split spoon sampler with a 140 pound hammer falling 30 inches. The number of hammer blows required to drive the sampler a total of 18 inches, in 6-inch increments, were recorded. The penetration resistance or "*N*" value is the summation of the last two 6-inch increments and is illustrated on the attached boring records adjacent to their corresponding sample depths. The penetration resistance is used as an index to derive soil parameters from various empirical correlations.

The Generalized Subsurface Profile presents the descriptions of the subsurface conditions encountered at the time of our field program, and also provide the penetration resistances recorded during the drilling and sampling process. The stratification lines and depth designations on the boring records represent the approximate boundary between the various soils encountered, as determined in the field by our personnel. In some cases, the transition between the various soils may be gradual.

Site & Subsurface Conditions

At the time of our exploration, the ground surface was cleared of trees and appeared relatively level. Soils, where exposed were composed of very dry fine sands. No standing water was observed during our visit. Typically, the soil profile as disclosed by SPT borings B-1 through B-4 initially consisted of 1 to 2 ½ feet of brown silty fine sand (SM). At the location of SPT borings B-1, B-3, and B-4, the surficial soils were underlain by about 1 ½ feet of tan, fine sand (SP). This stratum was underlain by about 6 to 11 feet of light gray and reddish tan to tan, mottled, clayey fine sand (SC/CL), or light gray and reddish tan, sandy clay (CL). Beneath these soils, and at the location of SPT borings B-2 and B-3, the subsurface profile consisted of light tan, medium to very dense limestone. All SPT borings were terminated at a depth of 15 feet below the existing ground surface. In general, the sandy soils have a loose relative density with "*N*" values ranging from 3 to 6 Blows Per Foot (BPF). The clayey soils have a firm to hard consistency with "*N*" values ranging from 7 to 49 BPF.

At the time of drilling, the groundwater was not encountered in any of the SPT borings. Groundwater levels should be expected to fluctuate due to seasonal climatic variations, changes in surface water runoff patterns across the site, construction activity, and other interrelated site-specific factors. Since groundwater level variations are anticipated, design drawings and specifications should accommodate such possibilities and construction planning should be based upon the assumption that variations will occur.

Area Geology

A review of the site geology indicates the subject project is underlain by Undifferentiated Quaternary Sediments (**Qu**) of the Pleistocene and Holocene epochs. These sediments consist of siliciclastics, organics and freshwater carbonates. The silicicalstics are light gray, tan, brown to dark, unconsolidated to poorly consolidated, clean to clayey, silty, fossiliferous, variably organic-bearing sands to blue green to olive green, poorly to moderately consolidated, sandy, silty, clays. Freshwater carbonates "*marls*" are buff colored to tan, unconsolidated to poorly consolidated, fossiliferous (mollusks) carbonate muds containing organics.

USDA/SCS Soil Survey

Cursory review of the Columbia County, Florida USDA Soil Survey indicates the majority of the site is underlain by the **Blanton fine sand (Soil Map Unit No. 8),** 0% to 5% slopes: approximately 15% of the subject site is underlain by this soil unit. This soil map unit consists of about 7 inches of gray sand, underlain by about 45 inches of very pale brown to light gray sand. The substratum soils are underlain by light yellowish brown to light brownish gray sandy loam to a depth of 80 inches or more below the natural ground surface. The soil survey indicates a perched high water table at about 5 to 6 feet below the original ground surface, during the period of December to March.

Foundation Recommendations

Based on the data obtained during this exploration, and the anticipated structural loading and grading conditions, it is our opinion the proposed building addition can be supported on a conventional shallow foundation system. This shallow foundation system may be designed using a maximum allowable soil bearing pressure of 2,000 psf. A detailed settlement analysis was beyond the scope of this exploration. However, based on our experience, the assumed loads, and the available site and subsurface information, we anticipate the new addition should experience total and differential settlements of less than 1 inch and ½-inch, respectively. We note that these settlement estimates are based on the structural loading and site grading assumptions stated previously. If the grading or structural assumptions are incorrect, we should be notified so that we can reevaluate our recommendations.

Site Clearing/Grading

Initial site preparation should consist of removing vegetation and topsoil (if any) that fall within the construction areas and to at least five feet beyond this area. The perimeter areas may need to be graded to help direct surface water runoff away from the planned construction areas.

Foundation Size and Bearing Depth

The minimum width recommended for isolated spread-type footings and continuous wall footings is 24 and 18 inches, respectively. Even though the maximum allowable soil bearing pressure may not be realized, these minimum width recommendations should still control the size of the foundations. All exterior footings should bear at a depth of at least 18 inches below the exterior final grades. Interior footings should bear at a depth of at least 18 inches below the interior floor slab. These recommended minimum-bearing depths should provide the necessary confinement for the foundation bearing level soils.

To alleviate differential settlement of the existing structure due to new imposed loads, the footing bearing elevation of the new building addition should be made to bear at the elevation of the existing footing system.

Bearing Material

The foundations should bear in either natural soils, or in compacted structural fill/backfill. If sandy soils exist at the footing bearing level, they should be compacted to densities equivalent to 95 percent of the modified Proctor maximum dry density (ASTM D 1557). Compaction should not be attempted on clayey soils at the footing bearing level. Rather they should be excavated using a smooth bucket/shovel, and replaced with a working platform of 10 to 12-inches of coarse concrete aggregate or two to three inches of lean concrete mud mat.

Site & Fill Compaction

After the above clearing/stripping operations, we recommend that the exposed and underlying soils be compacted to densities equivalent to 95 percent of the modified Proctor maximum dry density (ASTM D-1557). To compact the exposed and underlying soils, we recommend using a vibratory roller that has a static at-drum weight on the order of four to five tons and a drum diameter on the order of four feet. The initial compaction operations should also consist of at least eight overlapping passes of the vibratory roller in each direction. This compactive effort should help improve the overall uniformity and bearing conditions of the near-surface soils. **Caution should be exercised during the compaction of soils adjacent to the existing building. New fill placed adjacent to the existing footing system may be accomplished using plate tamper.**

Using a roller meeting the above requirements, structural fill required to raise the site to the planned finish grades may then be placed in loose lifts not exceeding 12 inches in thickness, and should then be compacted to densities similar to those recommended above. For ease of construction and compaction, we recommend that structural fill consist of a non-plastic, inorganic, granular soil containing less than 10 percent material passing the 200 mesh sieve (i.e., relatively clean sand). The upper fine sands encountered in our borings should meet these criteria.

Disturbed Soil Conditions

Should the exposed near-surface soils and/or structural fill/backfill material experience "pumping," the Geotechnical Engineer should be contacted to visit the site and observe the disturbed soils. It may be that compaction operations should be temporarily halted so that the excess pore water pressures can dissipate, followed by re-compaction; or the disturbed soils removed and backfilled with "dry" structural fill soils that are then compacted. Furthermore, the groundwater table should be checked and controlled as necessary in order to help insure proper drawdown of any high groundwater conditions that may be causing the "pumping" conditions during compaction or construction activity upon these soils.

Report Limitations

This report has been prepared for the exclusive use of **J.L. Dupree Construction Services, Inc.** for specific application to the project discussed herein. Our conclusions and recommendations have been rendered using generally accepted standards of geotechnical engineering practice in the State of Florida. No other warranty is expressed or implied. **CTI** is not responsible for the interpretations, conclusions, opinions, or recommendations of others based on the data contained herein. We note that the assessment of environmental conditions for the presence of pollutants in the soil, rock, or groundwater at the site was beyond the scope of the exploration. Field observations, monitoring, and quality assurance testing during earthwork and foundation installation are an extension of the geotechnical design. We recommend that the owner retain these services and that **CTI** be allowed to continue our involvement in the project through these phases of construction. During construction, we accept no responsibility for job site safety; which is the sole responsibility of the contractor.

We appreciate the opportunity to provide our engineering analysis and evaluation of the subsurface conditions at this site. Please contact us if you have any questions concerning this report or if we may be of any further service to you.

Very truly yours,
Cal-Tech Testing, Inc.

Linda Creamer, CEO, DBE

Linda M. Creamer
President – CEO

Nabil O. Hmeidi, P.E. 9/10/07
Senior Geotechnical Engineer
Licensed, Florida No. 57842

Distribution: Addressee (2)

ATTACHMENTS

Field Exploration Plan
Generalized Subsurface Profile

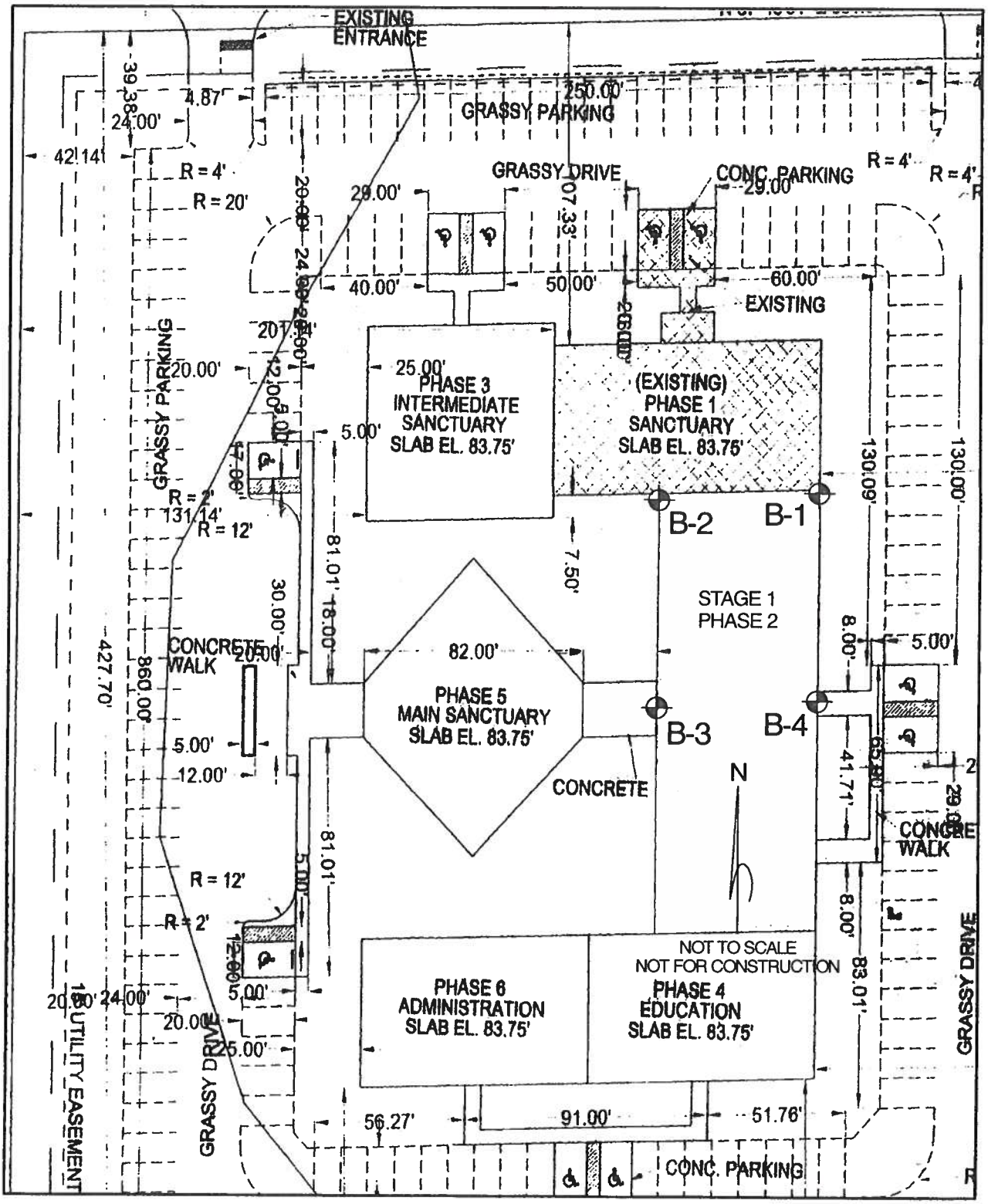

SUBSURFACE EXPLORATION CELEBRATION COMMUNITY CHURCH FORT WHITE, FLORIDA	FIELD EXPLORATION PLAN				FIGURE: 1
	DRAWN BY:	CHECKED BY:	DATE	JOB NO.	
	S.C. YOUNG	N.O. HMEIDI	9/10/07	07-00431	

B-1

Water Table: N/A

Depth (ft) | Soil Description

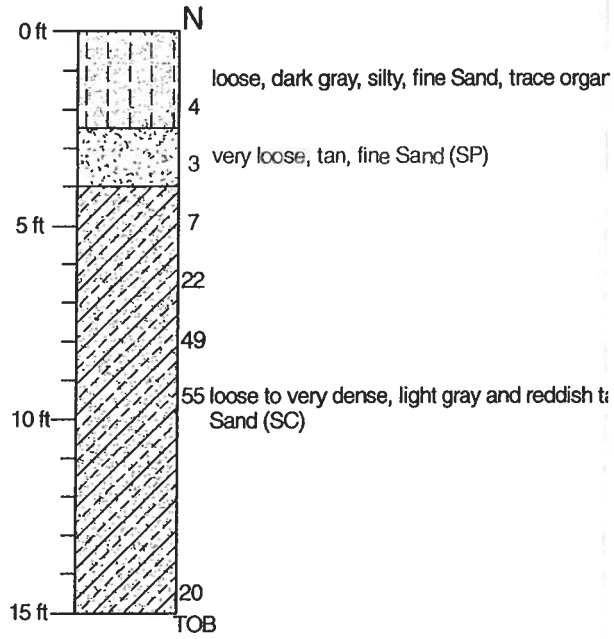

B-4

Water Table: N/A

Depth (ft)

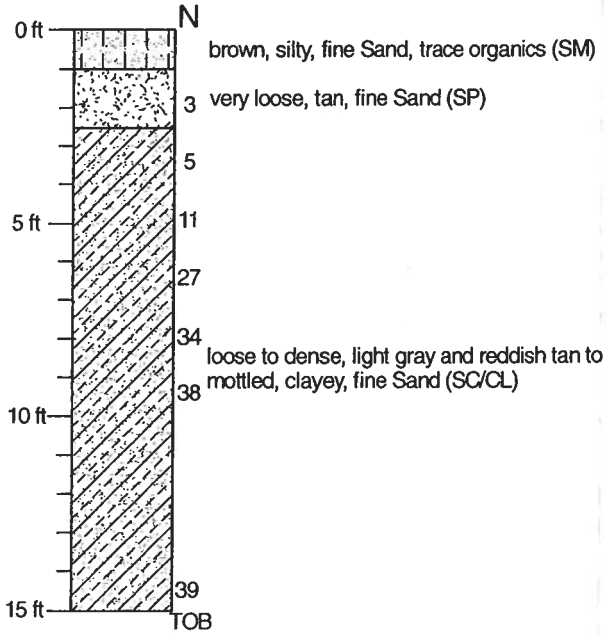

ENGINEERING CLASSIFICATION

GRANULAR MATERIALS-

Relative Density	SPT (Blows/12 inches)
Very Loose	Less than 4
Loose	4-10
Medium Dense	11-30
Dense	31-50
Very Dense	Greater than 50

SILTS AND CLAYS-

Consistency	SPT (Blows/12 inches)
Very Soft	Less than 2
Soft	2-4
Medium Stiff	5-8
Stiff	9-15
Very Stiff	16-30
Hard	Greater than 30

LEGEND:

TOB	Termination of Boring
GSE	Ground Surface Elevation
▽	Ground Water at Time of Drilling
V	Wet Season Water Table
N	Standard Penetration Resistance in Blows Per 12 inches (18- inch Spoon, ASTM D-1586)
WOR	Weight of Rod
WOH	Weight of Hammer
MC	Moisture Content (%)
OC	Organic Content (%)
-200	Percent Passing No. 200 U.S. Standard Sieve
LL	Liquid Limit
PI	Plasticity Index
(SP)	Unified Soil Classification Based on Visual Observation and Laboratory Tests

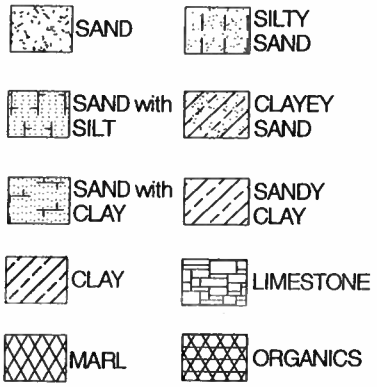

REVISIONS

DATE	BY	DESCRIPTION	DATE	BY	DA

TION
CHURCH

UECT I.D.

GENERALIZED SUBSURFACE PROFILE

FIGURE: 2

B-1

Water Table: N/A

Depth (ft) | Soil Description

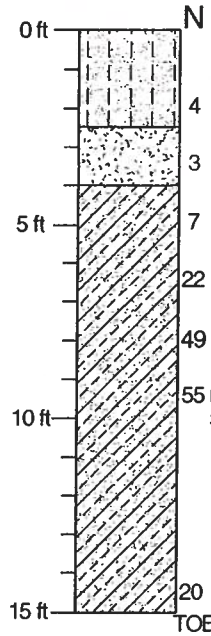

loose, dark gray, silty, fine Sand, trace organics (SM)

very loose, tan, fine Sand (SP)

loose to very dense, light gray and reddish tan, clayey, fine Sand (SC)

B-2

Water Table: N/A

Depth (ft) | Soil Description

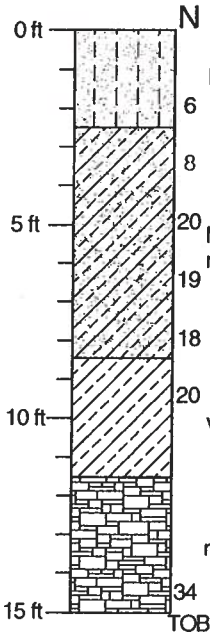

loose, dark gray, silty, fine Sand, trace organi

loose to medium dense, light gray and reddis mottled, clayey, fine Sand (SC/CL)

very stiff, light gray and reddish tan, sandy Cl

medium dense, light tan, weathered Limestor

B-4

Water Table: N/A

Depth (ft)

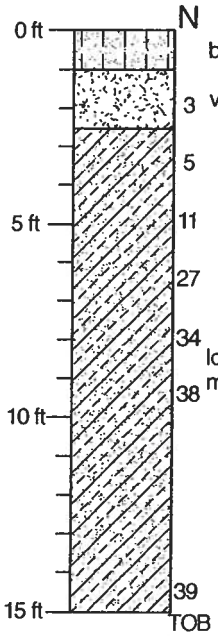

brown, silty, fine Sand, trace organics (SM)

very loose, tan, fine Sand (SP)

loose to dense, light gray and reddish tan to light tan, mottled, clayey, fine Sand (SC/CL)

REVISIONS							NAMES	DATE
DATE	BY	DESCRIPTION	DATE	BY	DESCRIPTION	DRAWN BY	S.C. Young	9/10/07
						CHECKED BY		
						DRILLED BY	B. Williams	9/5/07
						APPROVED BY		
						CAL-TECH JOB NO.	07-00431	

ENGINEER OF RECORD
CAL- TECH TESTING, II
P.O. BOX 1625
LAKE CITY, FL. 32056
PHONE NO. (386) 755-3633
FAX NO. (386) 752-5456