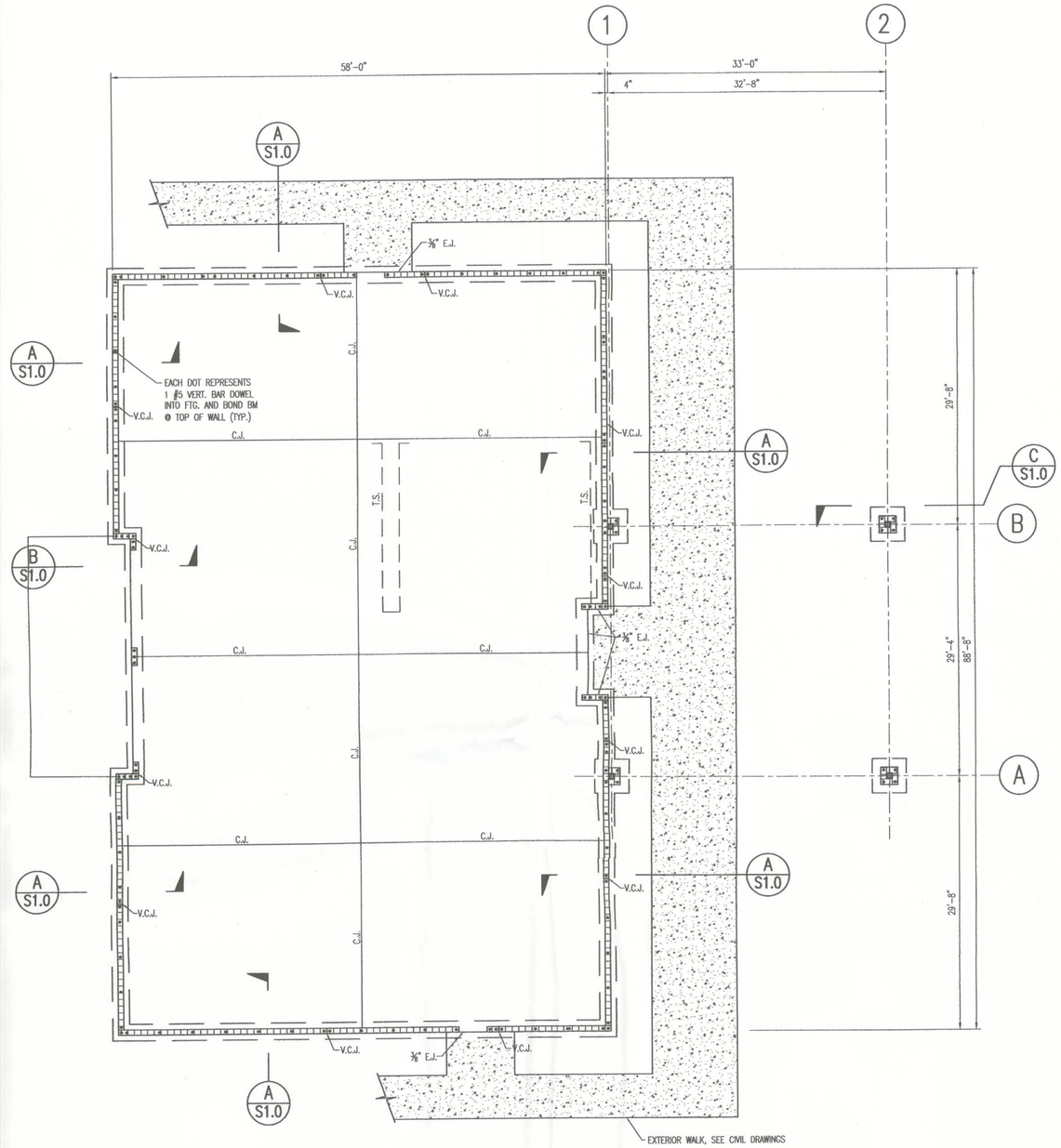

FOUNDATION AND FLOOR PLAN

SCALE: 1/8" = 1'-0"

NORTH

NOTES FOR FOUNDATION AND FLOOR PLANS:
(UNLESS INDICATED OTHERWISE):

1. ALL ELEVATIONS ARE RELATIVE TO AN ASSUMED FINISHED FLOOR ELEVATION OF 0.00'.
2. ALL WALLS ON FOOTINGS ARE REINFORCED, LOAD BEARING WALLS, SEE PLAN AND SEE PLAN AND MASONRY DETAILS ON SHEET S3.1.
3. CENTERLINE OF COLUMN FOOTING SHALL COINCIDE WITH CENTERLINE OF COLUMN.
4. SEE ARCHITECTURAL AND PLUMBING DRAWINGS FOR DETAILS AND EXACT LOCATIONS OF FLOOR RECESSES, FLOOR DRAINS AND OTHER FEATURES.

NOTE FOR FLOOR RECESSES:
FLOOR RECESSES SHOWN ON THE STRUCTURAL PLANS ARE SCHEMATIC ONLY AND MAY BE AFFECTED BY THE FINAL FINISH SCHEDULE. ACTUAL FLOOR RECESS REQUIREMENTS SHALL BE OBTAINED FROM THE ARCHITECTURAL PLANS, DETAILS AND FINISH SICHEDULES.

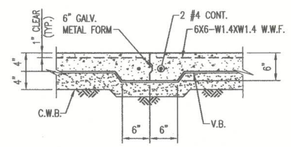

INDICATED BY C.J. ON PLAN

CONSTRUCTION JOINT DETAILS

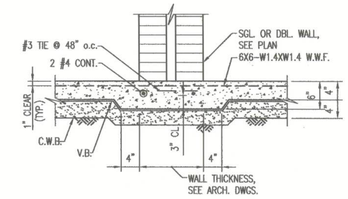

INDICATED BY T.S. ON PLAN

THICKENED SLAB

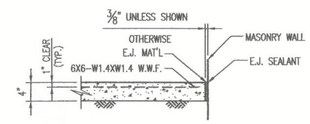

AT EXTERIOR WALL

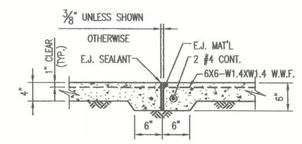

AT EXTERIOR SLAB

INDICATED BY 3/8" E.J. ON PLAN

EXPANSION JOINTS

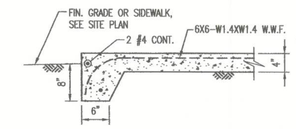

INDICATED BY "T" ON PLAN

TURNED DOWN SLAB

TYP. EXTERIOR SLAB ON GRADE DETAILS

NO SCALE

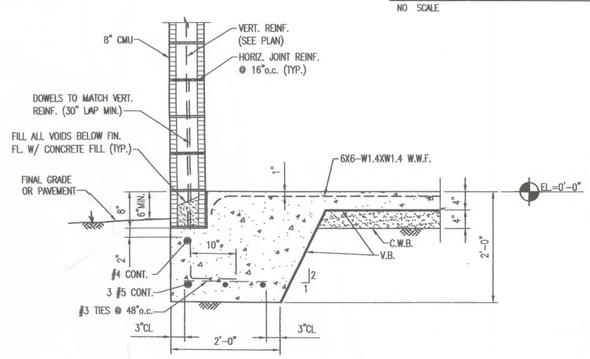

SECTION A S1.0

SCALE: 3/4"=1'-0"

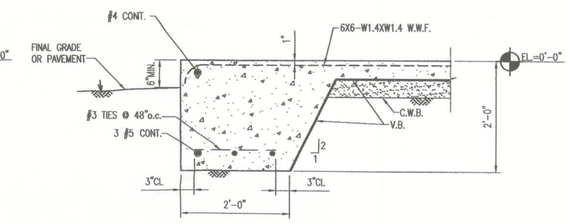

SECTION B S1.0

SCALE: 3/4"=1'-0"

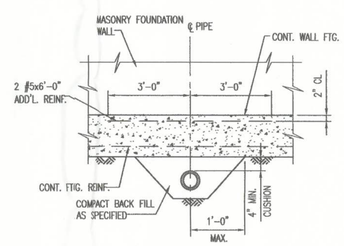

NOTES:
1. IF 4" CUSHION IS NOT AVAILABLE, USE "TYP. PIPE INTERSECT W/ FTG. DETAIL ON THIS SHEET.
2. COL. FTG. SHALL BE LOWERED IF IT INTERSECTS W/ PIPE.

TYP. PIPE UNDER WALL FTG.

NO SCALE

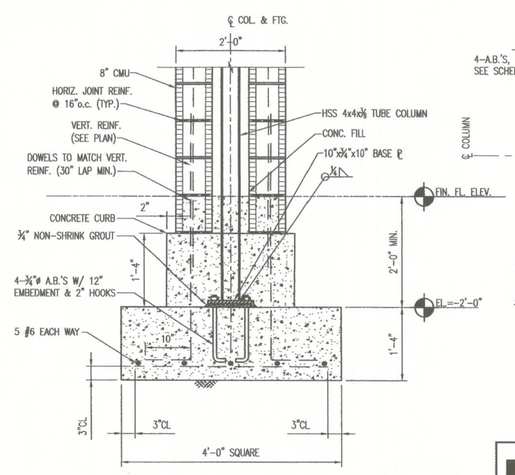

SECTION C S1.0

SCALE: 3/4"=1'-0"

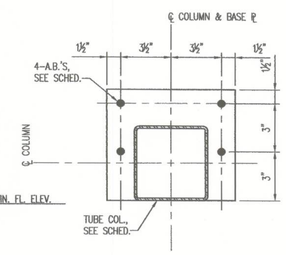

OFFSET BASE PLATE AGAINST BUILDING

NO SCALE

3-10-10

ROSENBAUM ENGINEERING, INCORPORATED
Structural & Civil Engineering
1705 South Gadsden Street, Suite 100
Tallahassee, Florida 32301
Phone # (850) 671-7230
Fax # (850) 671-7279
Authorization #: 00007815
E.O.R.: Patrick M. McKee
Florida Registration #: 63122

OWNERSHIP OF DRAWINGS: These drawings are instruments of service and shall remain the property of the Engineer. The Engineer shall retain all common law, statutory and reserved rights, including the copyright thereto. ©COPYRIGHT 2009

COPYRIGHT 2009

AKIN & ASSOCIATES ARCHITECTS, INC.

RELEASED FOR CONSTRUCTION

JOB NO.: 0908
DRAWN: PMM
CHECKED: PMM
DATE: 03/10/10

REVISIONS:

#	DATE	REMARK

NEW FT. WHITE BRANCH LIBRARY
FT. WHITE, FLORIDA

CLIENT:
COLUMBIA COUNTY BOARD OF COUNTY COMMISSIONERS

PROJ. PHASE:
CONSTRUCTION DOCUMENTS

SHEET TITLE:
FOUNDATION PLANS AND DETAILS

SCALE:
AS SHOWN

SHEET NO.:
S1.0