ITW Building Components Group, Inc.

2400 Lake Orange Drive suite 150 Orlando FL 32837
Florida Engineering Certificate of Authorization Number 0 278
Florida Certificate of Product Approval # FL1999
Page 1 of 1 Document ID 1V6X487-Z0504105927

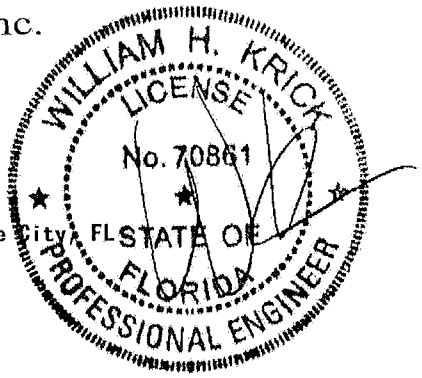

Truss Fabricator	Anderson Truss Company
Job Identification	14-085--O'Neal Roofing /Walks Exxon -- 3221 W. Hwy 90 Lake City, FL
Truss Count	23
Model Code	Florida Building Code 2010
Truss Criteria	FBC2010Com/TPI-2007(STD)
Engineering Software	Alpine Software,Version 13.02.
Structural Engineer of Record	The identity of the structural EOR did not exist as of
Address	the seal date per section 61G15-31.003(5a) of the FAC
Minimum Design Loads	Roof - 50.0 PSF @ 1.25 Duration
	Floor - N/A
	Wind - 119 MPH ASCE 7-10 -Closed

06/04/2014

Notes

1. Determination as to the suitability of these truss components for the structure is the responsibility of the building designer/engineer of record, as defined in ANSI/TPI 1
2. The drawing date shown on this index sheet must match the date shown on the individual truss component drawing.
3. As shown on attached drawings; the drawing number is preceded by: HCUSR9114

William H Krick
-Truss Design Engineer-

1950 Marley Drive
Haines City, FL 33844

Details: BRCLBSUB-VAL16010-

#	Ref	Description	Drawing#	Date
1	93076--EJ7	7' End Jack	14155001	06/04/14
2	93077-H11	40' Stepdown	14155002	06/04/14
3	93078-H13	40' Stepdown	14155003	06/04/14
4	93079-H15	40' Stepdown	14155004	06/04/14
5	93080-H7	40' Stepdown	14155005	06/04/14
6	93081-H9	40' Stepdown	14155006	06/04/14
7	93082--HJ1	1' Jack	14155007	06/04/14
8	93083--HJ1A	1' Jack	14155008	06/04/14
9	93084--HJ3	3' Jack	14155096	06/04/14
10	93085--HJ3A	3' Jack	14155097	06/04/14
11	93086--HJ5	5' Jack	14155098	06/04/14
12	93087--HJ5A	5' Jack	14155099	06/04/14
13	93088-HJ7	9'10"13 Hip	14155100	06/04/14
14	93089-HJ7A	9'10"13 Hip	14155101	06/04/14
15	93090-V1	37'5"3 Valley	14155102	06/04/14
16	93091-V2	33'5"3 Valley	14155103	06/04/14
17	93092-V3	29'5"3 Valley	14155104	06/04/14
18	93093-V4	25'5"3 Valley	14155105	06/04/14
19	93094-V5	21'5"3 Valley	14155106	06/04/14
20	93095-V6	17'5"3 Valley	14155107	06/04/14
21	93096-V7	13'5"3 Valley	14155108	06/04/14
22	93097--V8	9'5"3 Valley	14155109	06/04/14
23	93098--V9	5'5"3 Valley	14155110	06/04/14

ARCHIVE

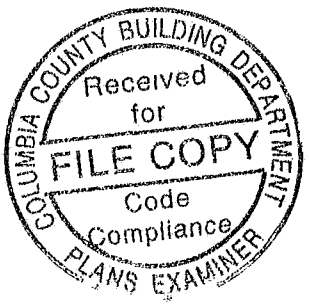

THIS DWG PREPARED FROM COMPUTER INPUT (LOADS & DIMENSIONS) SUBMITTED BY TRUSS MFR

(14-085--0 Neal Roofing /Walks Exxon -- 3221 W Hwy 90 Lake City FL - EJ7 7 End Jack)

Value Set 13B (Effective 6/1/2013)

Top chord 2x6 SP #2
Bot chord 2x4 SP #1

Lumber value set '13B" uses design values approved 1/30/2013 by ALSC

Deflection meets L/240 live and L/180 total load Creep increase factor for dead load is 1 50

119 mph wind, 15 00 ft mean hgt, ASCE 7-10, CLOSED bldg, not located within 4 50 ft from roof edge, RISK CAT III OR IV, EXP B, wind TC DL=3 5 psf, wind BC DL=5 0 psf GCpi(+/-)=0.18

Wind loads and reactions based on MWFRS with additional C&C member design

MWFRS loads based on trusses located at least 7 50 ft from roof edge

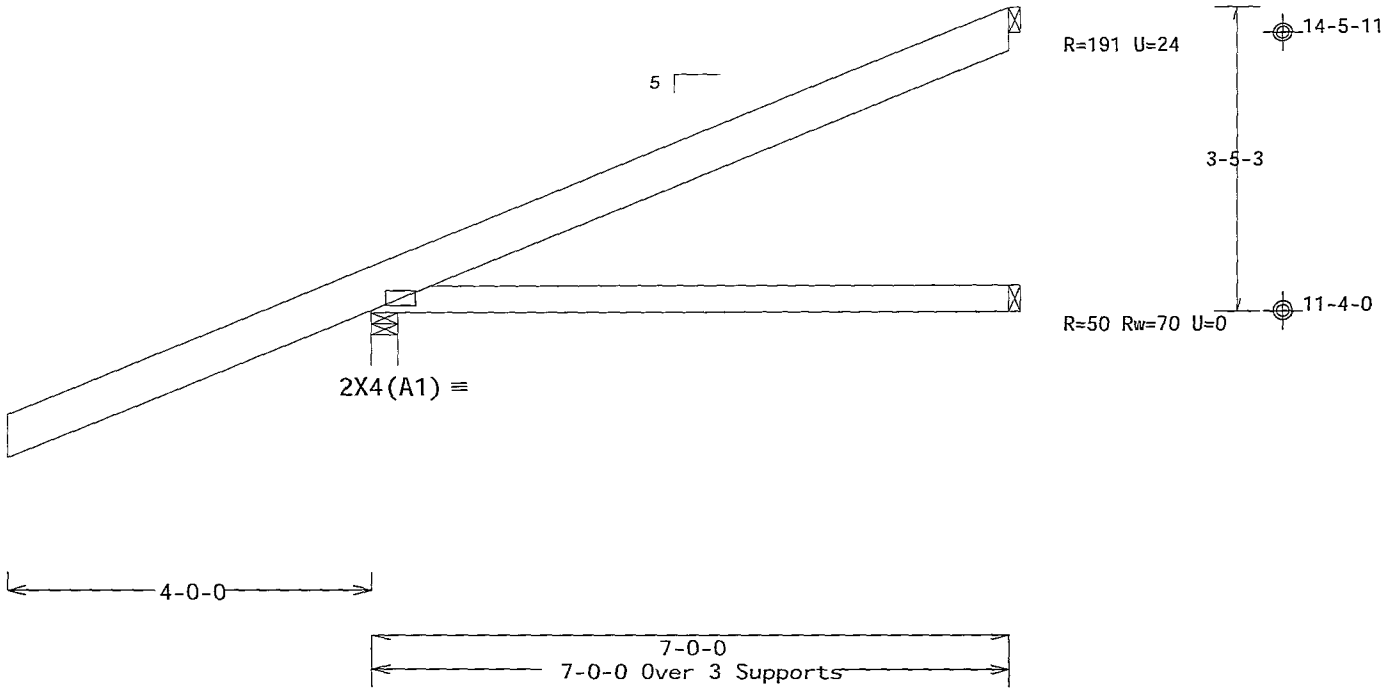

Design Crit FBC2010Com/TPI-2007(STD)

PLT TYP Wave FT/RT=10%(0%)/0(0) 13.02.07 0228.14 QTY 14 FL/-/5/-/-/R/- Scale =.5"/Ft.

ALPINE
ITW Building Components Group Inc.
Orlando FL, 32837
FL COA #0 278

WARNING READ AND FOLLOW ALL NOTES ON THIS SHEET
IMPORTANT FURNISH THIS DESIGN TO ALL CONTRACTORS INCLUDING INSTALLERS

Trusses require extreme care n fabricating handl ng sh pp ng nstall ng and bracing Refer to and follow the latest ed tion of BCSI (Bu ld ng Component Safety Informat on by TPI and WTCA) for safety pract ces pr or to performing these functions Installers shall prov de temporary bracing per BCSI. Unless noted otherwise top chord shall have properly attached structural sheathing and bottom chord shall have a properly attached rigid ce ling Locations shown for permanent lateral restraint of webs shall have bracing nstalled per BCSI sections B3 B7 or B10 as appl cable

ITW Building Components Group Inc (ITWBCG) shall not be respons ble for any dev ation from this des gn any fa lure to build the truss n conformance w th ANSI/TPI 1 or for handl ng sh pping installa on & brac ng of trusses Apply plates to each face of truss and position as shown above and on the Jo n Deta ls unless noted otherwise Refer to drawings 160A-Z for standard plate pos tions A seal on th s draw ng or cover page list ng this drawing ndicates acceptance of professional eng neering responsib l ty solely for the design shown The su tabil ty and use of this des gn for any structure is the respons b l ty of the Bu ld ng Des gner per ANSI/TPI 1 Sec 2 For more informat on see This des general notes page ITW-BCG www itwbcg com TPI www tp nst org WTCA www sbc ndustry com ICC www iccsafe org

WILLIAM H. KRICK
LICENSE
No. 70861
STATE OF FLORIDA
PROFESSIONAL ENGINEER

06/04/2014

TC LL	30.0 PSF	REF	R9114- 93076
TC DL	10.0 PSF	DATE	06/04/14
BC DL	10.0 PSF	DRW	HCUSR9114 14155001
BC LL	0.0 PSF	HC-ENG	WHK/WHK
TOT.LD.	50.0 PSF	SEQN-	42498
DUR.FAC.	1.25	FROM	JMW
SPACING	24.0"	JREF-	1V6X487_Z05

(14-085--0 Neal Roofing /Walks Exxon -- 3221 W Hwy 90 Lake City FL - H11 40 Stepdown Hip)

Value Set 13B (Effective 6/1/2013)

Top chord 2x4 SP #1 T1 2x6 SP #1 Dense
T2 2x6 SP #2
Bot chord 2x4 SP #1 B3 2x4 SP 2850f-2 3E
Webs 2x4 SP #3

Lumber value set '13B' uses design values approved 1/30/2013 by ALSC

In lieu of structural panels use purlins to brace all flat TC @ 24' OC

MWFRS loads based on trusses located at least 15 00 ft from roof edge

119 mph wind, 15 00 ft mean hgt, ASCE 7-10, CLOSED bldg, not located within 13 00 ft from roof edge, RISK CAT III OR IV, EXP B, wind TC DL=3 5 psf, wind BC DL=5 0 psf GCpi(+/-)=0 18

Wind loads and reactions based on MWFRS with additional C&C member design

Calculated horizontal deflection is 0 13" due to live load and 0.13" due to dead load

Deflection meets L/240 live and L/180 total load Creep increase factor for dead load is 1 50

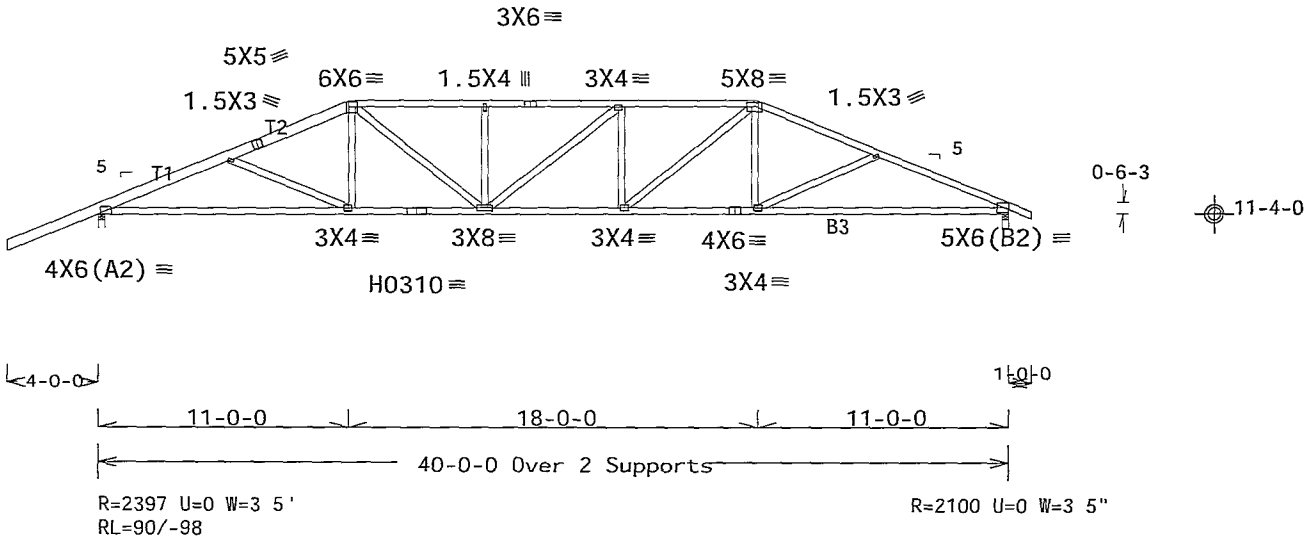

Design Crit FBC2010Com/TPI-2007(STD)

PLT TYP 20 Gauge HS,Wave FT/RT=10%(0%)/0(0) 13.03-07-0228.14 QTY 1 FL/-/5/-/-/R/- Scale =.125"/Ft

ALPINE
ITW Building Components Group Inc.
Orlando FL, 32837
FL COA #0 278

WARNING READ AND FOLLOW ALL NOTES ON THIS SHEET!
IMPORTANT FURNISH THIS DESIGN TO ALL CONTRACTORS INCLUDING INSTALLERS

Trusses requ re extreme care n fabricat ng handl ng shipping installing and bracing Refer to follow the latest ed t on of BCSI (Bu lding Component Safety Informat on by TPI and WTCA) for safety pract ces prior to performing these functions Installers shall prov de temporary brac ng per Unless noted otherwise top chord shall have properly attached structural sheathing and bottom chord shall have a properly attached r g d ceiling Locations shown for permanent lateral restraint of webs shall have bracing installed per BCSI sect ons B3 B7 or B10 as applicable

ITW Building Components Group Inc (ITWBCG) shall not be respons ble for any dev ation from this design any fa lure to build the truss n conformance w th ANSI/TPI 1 or for handling shipping installa on & brac ng of trusses Apply plates to each face of truss and position as shown above and on the Jo Details unless noted otherw se Refer to drawings 160A-Z for standard plate posit ons A seal on this drawing or cover page i st ng th s drawing nd cates acceptance of professional engineering respons b l ty solely for the des gn shown The suitabil ty and use of th s design for any stru the responsibility of the Build ng Designer per ANSI/TPI 1 Sec 2 For more information see TP general notes page ITW-BCG www twbcg com TPI www tp nst org WTCA www sbcindustry com ICC www iccsafe org

WILLIAM H. KRICK LICENSE No. 70861 STATE OF FLORIDA PROFESSIONAL ENGINEER
06/04/2014

TC LL	30.0 PSF	REF	R9114- 93077
TC DL	10.0 PSF	DATE	06/04/14
BC DL	10.0 PSF	DRW	HCUSR9114 14155002
BC LL	0.0 PSF	HC-ENG	WHK/WHK
TOT.LD.	50.0 PSF	SEQN-	42501
DUR.FAC.	1.25	FROM	JMW
SPACING	24.0"	JREF-	1V6X487_Z05

THIS DWG PREPARED FROM COMPUTER INPUT (LOADS & DIMENSIONS) SUBMITTED BY TRUSS MFR

(14-085--0 Neal Roofing /Walks Exxon -- 3221 W Hwy 90 Lake City FL - H13 40 Stepdown Hip)

Value Set 13B (Effective 6/1/2013)

Top chord 2x4 SP #1 T1 2x6 SP #1 Dense
T2 2x6 SP #2
Bot chord 2x4 SP #1 B3 2x4 SP 2850f-2 3E
Webs 2x4 SP #3
Rt Splice Block 2x4 SP #3

Lumber value set "13B' uses design values approved 1/30/2013 by ALSC

Deflection meets L/240 live and L/180 total load Creep increase factor for dead load is 1 50

119 mph wind, 15 00 ft mean hgt, ASCE 7-10, CLOSED bldg, not located within 13 00 ft from roof edge, RISK CAT III OR IV, EXP B, wind TC DL=3 5 psf, wind BC DL=5 0 psf GCpi(+/-)=0 18

Wind loads and reactions based on MWFRS with additional C&C member design

(a) Continuous lateral restraint equally spaced on member

In lieu of structural panels use purlins to brace all flat TC @ 24" OC

MWFRS loads based on trusses located at least 15 00 ft from roof edge

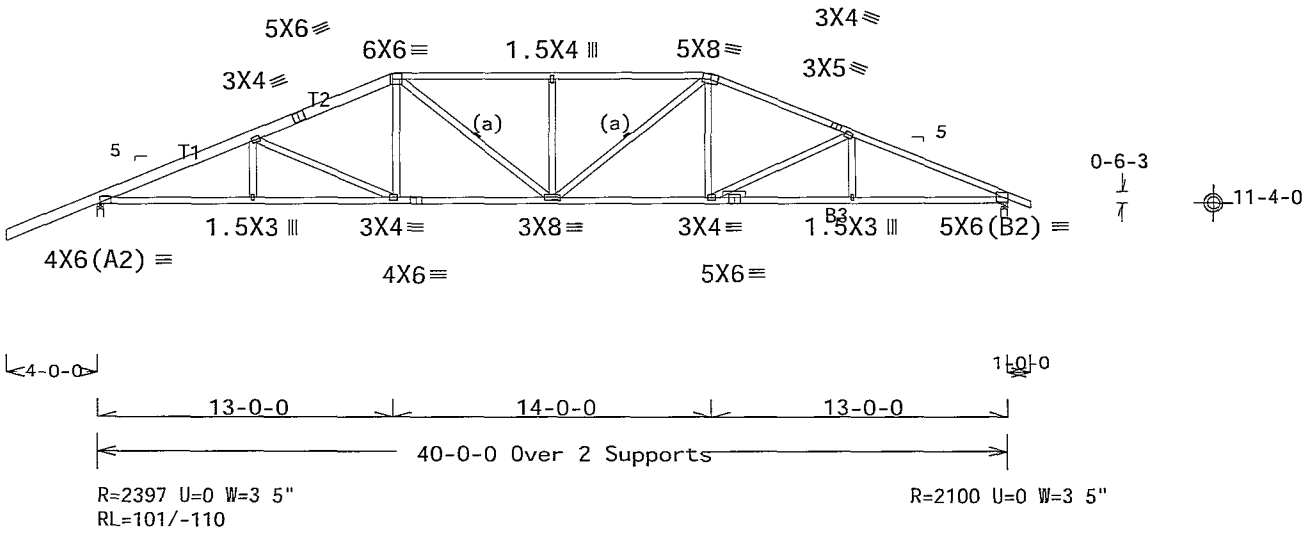

Design Crit FBC2010Com/TPI-2007(STD)

PLT TYP Wave FT/RT=10%(0%)/0(0) 13 06 07 0228 14 QTY 1 FL/-/5/-/-/R/- Scale = 125"/Ft

ALPINE
ITW Building Components Group Inc.
Orlando FL, 32837
FL COA #0 278

WARNING READ AND FOLLOW ALL NOTES ON THIS SHEET!
IMPORTANT FURNISH THIS DESIGN TO ALL CONTRACTORS INCLUDING INSTALLERS

Trusses require extreme care n fabricating handling sh pp ng nstall ng and bracing Refer to follow the latest edition of BCSI (Building Component Safety Informat on by TPI and WTCA) for pract ces prior to performing these funct ons Installers shall prov de temporary bracing per BCSI Unless noted otherwise top chord shall have properly attached structural sheathing and bottom chord shall have a properly attached rigid ceil ng Locations shown for permanent lateral restraint of webs shall have brac ng installed per BCSI sect ons B3 B7 or B10 as appl cable

ITW Bu ld ng Components Group Inc (ITWBCG) shall not be respons ble for any dev ation from this design any fa lure to build the truss in conformance w th ANSI/TPI 1 or for handl ng sh pping nstallat on & brac ng of trusses Apply plates to each face of truss and pos t on as shown above and on this Jo nt Deta ls unless noted otherwise Refer to draw ngs 160A-Z for standard plate pos tions A seal on this *draw ng or cover page i st ng th s drawing nd cates acceptance of professional engineering* respons bility solely for the des gn shown The su tab lity and use of this des gn for any struc the responsibility of the Build ng Designer per ANSI/TPI 1 Sec 2 For more nformation see This 16b general notes page ITW-BCG www twbcg com TPI www tp nst org WTCA www sbc ndustry com ICC www iccsafe org

WILLIAM H. KRICK LICENSE No. 70861 STATE OF FLORIDA PROFESSIONAL ENGINEER
06/04/2014

TC LL	30.0 PSF	REF	R9114- 93078
TC DL	10.0 PSF	DATE	06/04/14
BC DL	10.0 PSF	DRW	HCUSR9114 14155003
BC LL	0.0 PSF	HC-ENG	WHK/WHK
TOT.LD.	50.0 PSF	SEQN-	42507
DUR.FAC.	1.25	FROM	JMW
SPACING	24.0"	JREF-	1V6X487_Z05

(14-085--0 Neal Roofing /Walks Exxon -- 3221 W Hwy 90 Lake City, FL - H15 40 Stepdown Hip)

Value Set 13B (Effective 6/1/2013)

Top chord 2x6 SP #2 T3 2x4 SP 2850f-2 3E
T4, T5 2x4 SP #1
Bot chord 2x4 SP M-30 B3 2x4 SP 2850f-2 3E
Webs 2x4 SP #3
Lt Splice Block 2x4 SP #3 Rt Splice Block 2x4 SP #3

Lumber value set "13B' uses design values approved 1/30/2013 by ALSC

Truss passed check for 20 psf additional bottom chord live load in areas with 42"-high x 24"-wide clearance

Top chord overhangs have been checked only for loads as indicated Overhangs not checked for man loads or long-term deflection

119 mph wind, 15 00 ft mean hgt, ASCE 7-10, CLOSED bldg, not located within 13 00 ft from roof edge, RISK CAT III OR IV, EXP B, wind TC DL=3 5 psf wind BC DL=5 0 psf GCpi(+/-)=0.18

Wind loads and reactions based on MWFRS with additional C&C member design

(a) Continuous lateral restraint equally spaced on member

In lieu of structural panels use purlins to brace all flat TC @ 24" OC

Deflection meets L/240 live and L/180 total load. Creep increase factor for dead load is 1 50

MWFRS loads based on trusses located at least 15 00 ft from roof edge

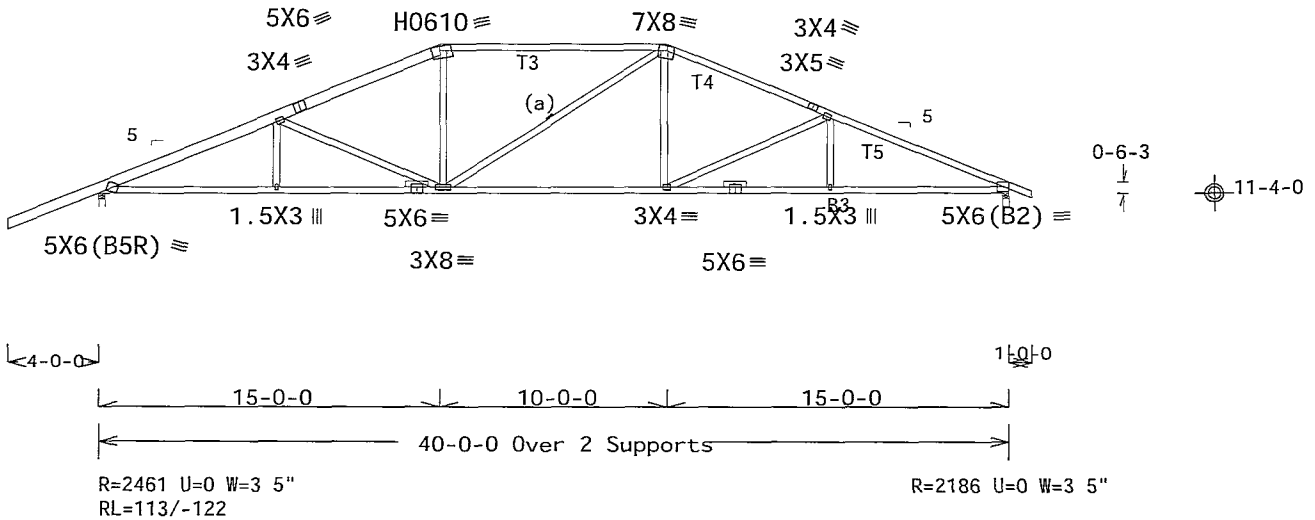

Design Crit FBC2010Com/TPI-2007(STD)

PLT TYP 20 Gauge HS,Wave FT/RT=10%(0%)/0(0) 13 0[illegible]07 0228 14 QTY:1 FL/-/5/-/-/R/- Scale =.125"/Ft.

ALPINE
ITW Building Components Group Inc.
Orlando FL, 32837
FL COA #0 278

WARNING READ AND FOLLOW ALL NOTES ON THIS SHEET!
IMPORTANT FURNISH THIS DESIGN TO ALL CONTRACTORS INCLUDING INSTALLERS

Trusses requ re extreme care n fabr cat ng handl ng shipping nstalling and bracing Refer to and follow the latest edition of BCSI (Build ng Component Safety Informat on by TPI and WTCA) for safety pract ces prior to performing these functions Installers shall prov de temporary brac ng per BCSI Unless noted otherwise top chord shall have properly attached structural sheathing and bottom chord shall have a properly attached rig d ce l ng Locations shown for permanent lateral restrai of webs shall have brac ng installed per BCSI sect ons B3 B7 or B10 as applicable

ITW Building Components Group Inc (ITWBCG) shall not be responsible for any dev at on from this design any fa lure to build the truss n conformance w th ANSI/TPI 1 or for handling sh pping nstallation & brac ng of trusses Apply plates to each face of truss and pos tion as shown above and on the Jo nt Data Is unless noted otherwise Refer to drawings 160A-Z for standard plate pos t ons A seal on this draw ng or cover page I st ng th s draw ng nd cates acceptance of professional engineering responsibil ty solely for the design shown The suitab lity and use of this design for any structure is the responsibility of the Building Designer per ANSI/TPI 1 Sec 2 For more information see this job general notes page ITW-BCG www twbcg com TPI www tp nst org WTCA www sbc ndustry com ICC www iccsafe org

WILLIAM H. KRICK LICENSE No. 70861 STATE OF FLORIDA PROFESSIONAL ENGINEER
06/04/2014

TC LL	30.0 PSF	REF	R9114- 93079
TC DL	10.0 PSF	DATE	06/04/14
BC DL	10.0 PSF	DRW	HCUSR9114 14155004
BC LL	0.0 PSF	HC-ENG	WHK/WHK
TOT.LD.	50.0 PSF	SEQN-	42504
DUR.FAC.	1.25	FROM	JMW
SPACING	24.0"	JREF-	1V6X487_Z05

(14-085--0 Neal Roofing /Walks Exxon -- 3221 W Hwy 90 Lake City, FL - H7 40 Stepdown Hip Girder)

Value Set 13B (Effective 6/1/2013)

Top chord 2x6 SP M-26 T4 2x6 SP #1 Dense
Bot chord 2x4 SP 2850f-2 3E
Webs 2x4 SP #3 W2, W10 2x4 SP #2

Lumber value set '13B' uses design values approved 1/30/2013 by ALSC

(**) 1 plate(s) require special positioning Refer to scaled plate plot details for special positioning requirements

119 mph wind, 15 00 ft mean hgt, ASCE 7-10, CLOSED bldg, not located within 9 00 ft from roof edge, RISK CAT III OR IV, EXP B, wind TC DL=3 5 psf, wind BC DL=5 0 psf GCpi(+/-)=0 18

Wind loads and reactions based on MWFRS

Calculated horizontal deflection is 0 20" due to live load and 0 19" due to dead load

(a) Continuous lateral restraint equally spaced on member

In lieu of structural panels use purlins to brace all flat TC @ 24" OC

Calculated vertical deflection is 0 75' due to live load and 0 75' due to dead load at X = 24-5-3

Special loads
------(Lumber Dur Fac =1 25 / Plate Dur Fac =1 25)
TC- From 82 plf at -4 00 to 82 plf at 7 00
TC- From 41 plf at 7 00 to 41 plf at 19.00
TC- From 41 plf at 19 00 to 41 plf at 33 00
TC- From 82 plf at 33 00 to 82 plf at 41 00
BC- From 4 plf at -4 00 to 4 plf at 0.00
BC- From 20 plf at 0 00 to 20 plf at 7 03
BC- From 10 plf at 7 03 to 10 plf at 14.00
BC- From 10 plf at 14 00 to 10 plf at 28.00
BC- From 10 plf at 28 00 to 10 plf at 32 97
BC- From 20 plf at 32.97 to 20 plf at 40.00
BC- From 4 plf at 40.00 to 4 plf at 41.00
TC- 699 24 lb Conc. Load at 7 03
TC- 190 83 lb Conc. Load at 9 06,11 06,13 06,15 06 17 06,19 06,20 94,22 94,24 94,26 94,28 94,30 94
TC- 295.41 lb Conc Load at 32 97
BC- 129 90 lb Conc Load at 7 03
BC- 49 74 lb Conc Load at 9 06,11 06,13.06,15.06 17 06,19 06,20 94,22 94,24.94,26.94,28 94,30 94
BC- 91 20 lb Conc. Load at 32 97

Deflection meets L/240 live and L/180 total load Creep increase factor for dead load is 1 50.

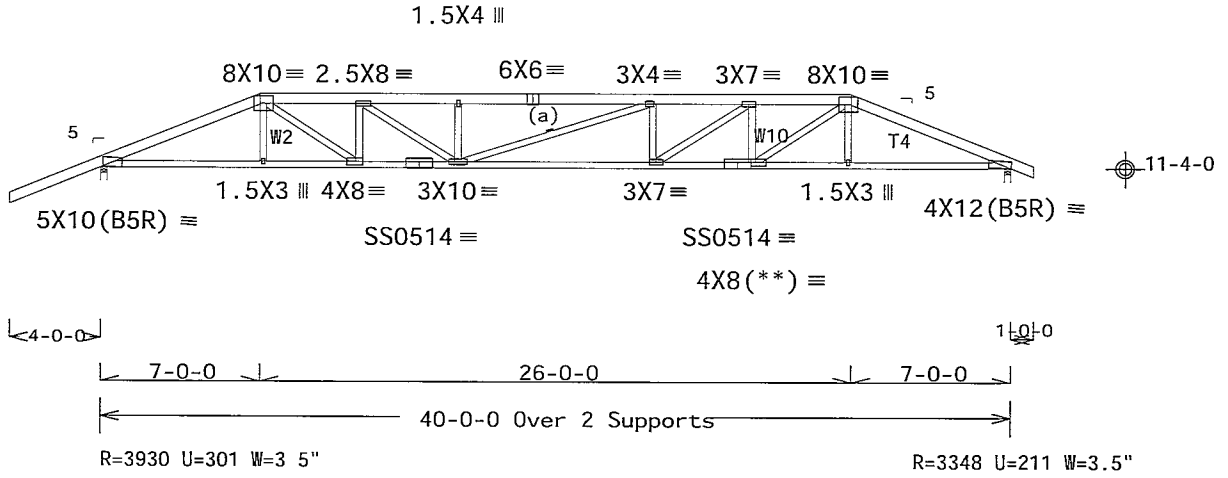

Design Crit FBC2010Com/TPI-2007(STD)

PLT TYP. 18 Gauge HS,Wave | FT/RT=10%(0%)/0(0) | 13 0-07 0228 14 | QTY.1 | FL/-/5/-/-/R/- | Scale =.125"/Ft.

ALPINE
ITW Building Components Group Inc.
Orlando FL, 32837
FL COA #0 278

WARNING READ AND FOLLOW ALL NOTES ON THIS SHEET!
IMPORTANT FURNISH THIS DESIGN TO ALL CONTRACTORS INCLUDING INSTALLERS

Trusses require extreme care in fabricating handling shipping install ng and brac ng Re d to follow the latest edition of BCSI (Building Component Safety Informat on by TPI and WTCA) for s practices prior to performing these functions Installers shall prov de temporary brac ng per BCSI Unless noted otherw se top chord shall have properly attached structural sheath ng and bottom chord shall have a properly attached r g d ceiling Locations shown for permanent lateral restrain of webs shall have brac ng nstalled per BCSI sections B3 B7 or B10 as appl cable

ITW Bu ld ng Components Group Inc (ITWBCG) shall not be respons ble for any dev ation from this design any fa lure to build the truss in conformance w th ANSI/TPI 1 or for handl ng sh pping installat on & brac ng of trusses Apply plates to each face of truss and pos t on as shown above and on the Jo nt Deta ls unless noted otherwise Refer to draw ngs 160A-Z for standard plate pos tions A seal on this draw ng or cover page l sting th s draw ng nd cates acceptance of professional engineering respons b l ty solely for the des gn shown The su tab l ity and use of this design for any struct e is the respons bil ty of the Bu ld ng Des gner per ANSI/TPI 1 Sec 2 For more informat on see this des general notes page ITW-BCG www itwbcg com TPI www tpinst org WTCA www sbc ndustry com ICC www iccsafe org

WILLIAM H. KRICK LICENSE No. 70861 STATE OF FLORIDA PROFESSIONAL ENGINEER
06/04/2014

TC LL	30.0 PSF	REF R9114- 93080
TC DL	10.0 PSF	DATE 06/04/14
BC DL	10.0 PSF	DRW HCUSR9114 14155005
BC LL	0.0 PSF	HC-ENG WHK/WHK
TOT.LD.	50.0 PSF	SEQN- 42551
DUR.FAC.	1.25	FROM JMW
SPACING	24.0"	JREF- 1V6X487_Z05

THIS DWG PREPARED FROM COMPUTER INPUT (LOADS & DIMENSIONS) SUBMITTED BY TRUSS MFR

(14-085--0 Neal Roofing /Walks Exxon -- 3221 W Hwy 90 Lake City, FL - H9 40 Stepdown Hip)

Value Set 13B (Effective 6/1/2013)

Top chord 2x4 SP M-30 T1, T2 2x6 SP #2
Bot chord 2x4 SP #1 B3 2x4 SP M-30
Webs 2x4 SP #3

Lumber value set '13B' uses design values approved 1/30/2013 by ALSC

(a) Continuous lateral restraint equally spaced on member

In lieu of structural panels use purlins to brace all flat TC @ 24' OC

MWFRS loads based on trusses located at least 7 50 ft from roof edge

119 mph wind 15 00 ft mean hgt, ASCE 7-10, CLOSED bldg, not located within 13 00 ft from roof edge, RISK CAT III OR IV, EXP B, wind TC DL=3 5 psf, wind BC DL=5 0 psf GCpi(+/-)=0 18

Wind loads and reactions based on MWFRS with additional C&C member design

Calculated horizontal deflection is 0 13' due to live load and 0 13" due to dead load

Deflection meets L/240 live and L/180 total load Creep increase factor for dead load is 1 50

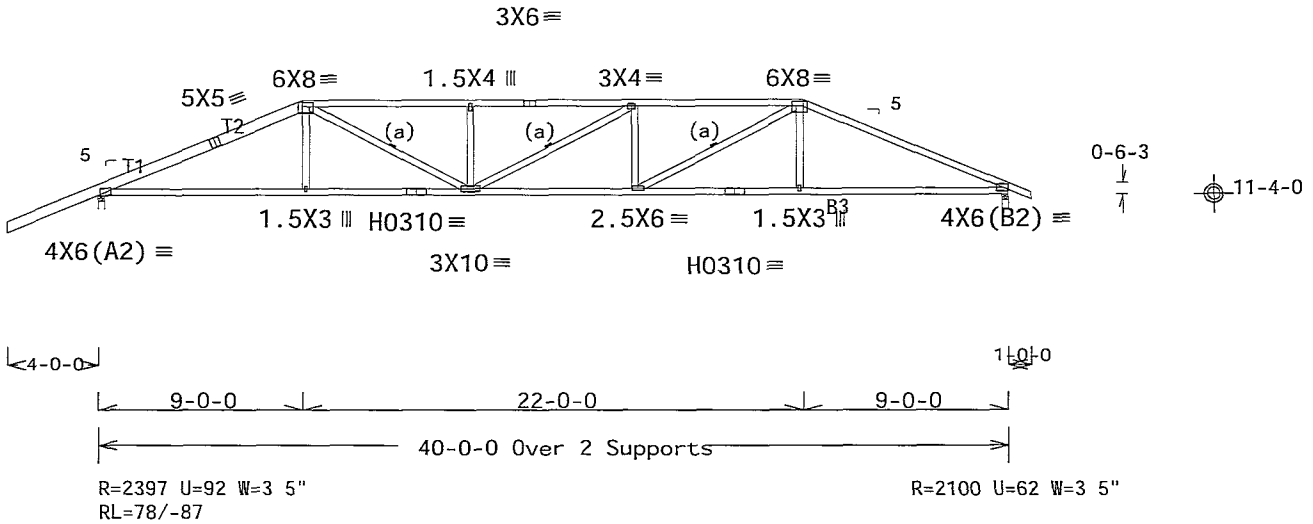

Design Crit FBC2010Com/TPI-2007(STD)

PLT TYP 20 Gauge HS,Wave FT/RT=10%(0%)/0(0) 13 02 07 0228 14 QTY 1 FL/-/5/-/-/R/- Scale =.125"/Ft

ALPINE
ITW Building Components Group Inc.
Orlando FL, 32837
FL COA #0 278

WARNING READ AND FOLLOW ALL NOTES ON THIS SHEET!
**IMPORTANT * FURNISH THIS DESIGN TO ALL CONTRACTORS INCLUDING INSTALLERS

Trusses requ re extreme care n fabr cat ng handl ng shipping nstall ng and brac ng Re to follow the latest edition of BCSI (Bu ld ng Component Safety Informat on by TPI and WTCA) fo pract ces prior to performing these funct ons Installers shall prov de temporary brac ng Unless noted otherw se top chord shall have properly attached structural sheath ng and bot shall have a properly attached r g d ce l ng Locat ons shown for permanent lateral restra shall have brac ng installed per BCSI sect ons B3 B7 or B10 as appl cable

ITW Building Components Group Inc (ITWBCG) shall not be responsible for any dev at on fr any failure to bu ld the truss n conformance with ANSI/TPI 1 or for handl ng sh pp ng brac ng of trusses Apply plates to each face of truss and position as shown above and on Deta ls unless noted otherw se Refer to draw ngs 160A-Z for standard plate pos t ons A draw ng or cover page l st ng th s drawing ndicates acceptance of profess onal eng neer ng respons b l ty solely for the des gn shown The suitab l ty and use of th s des gn for any the respons b l ty of the Bu ld ng Des gner per ANSI/TPI 1 Sec 2 For more informat on see general notes page ITW-BCG www twbcg com TPI www tp nst org WTCA www sbc ndustry com ICC www ccsafe org

WILLIAM H. KRICK LICENSE No. 70861 STATE OF FLORIDA PROFESSIONAL ENGINEER
06/04/2014

TC LL	30.0 PSF	REF	R9114- 93081
TC DL	10.0 PSF	DATE	06/04/14
BC DL	10.0 PSF	DRW	HCUSR9114 14155006
BC LL	0.0 PSF	HC-ENG	WHK/WHK
TOT LD	50.0 PSF	SEQN-	42505
DUR.FAC.	1.25	FROM	JMW
SPACING	24.0"	JREF-	1V6X487_Z05

(14-085--0 Neal Roofing /Walks Exxon -- 3221 W Hwy 90 Lake City FL - HJ1 1 Jack)

Value Set 13B (Effective 6/1/2013)

Top chord 2x6 SP #2
Bot chord 2x4 SP #1

Lumber value set "13B' uses design values approved 1/30/2013 by ALSC

Deflection meets L/240 live and L/180 total load Creep increase factor for dead load is 1 50

Negative reaction(s) of -724# MAX (See below) from a non-wind load case requires uplift connection

119 mph wind, 15 00 ft mean hgt, ASCE 7-10, CLOSED bldg, Located anywhere in roof, RISK CAT III OR IV, EXP B, wind TC DL=3 5 psf, wind BC DL=5 0 psf GCpi(+/-)=0 18

Wind loads and reactions based on MWFRS with additional C&C member design

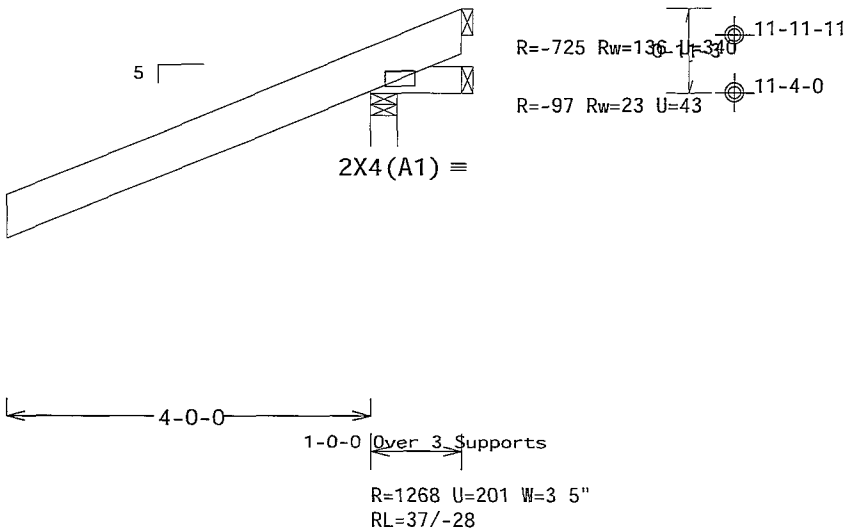

Design Crit FBC2010Com/TPI-2007(STD)

PLT TYP. Wave | FT/RT=10%(0%)/0(0) | 13 02 07 0228.14 | QTY 3 | FL/-/5/-/-/R/- | Scale =.5"/Ft.

ALPINE
ITW Building Components Group Inc.
Orlando FL, 32837
FL COA #0 278

WARNING READ AND FOLLOW ALL NOTES ON THIS SHEET!
IMPORTANT FURNISH THIS DESIGN TO ALL CONTRACTORS INCLUDING INSTALLERS

Trusses requ re extreme care n fabr cat ng handl ng sh pp ng nstall ng and bracing Re to follow the latest edit on of BCSI (Bu ld ng Component Safety Informat on by TPI and WTCA) for pract ces prior to perform ng these funct ons Installers shall prov de temporary brac ng Unless noted otherwise top chord shall have properly attached structural sheath ng and bottom chord shall have a properly attached r g d ceiling Locations shown for permanent lateral restraint of webs shall have bracing nstalled per BCSI sections B3 B7 or B10 as appl cable

ITW Build ng Components Group Inc (ITWBCG) shall not be respons ble for any dev at on any failure to bu ld the truss n conformance with ANSI/TPI 1 or for handl ng sh pp ng brac ng of trusses Apply plates to each face of truss and position as shown above and on Details unless noted otherw se Refer to draw ngs 160A-Z for standard plate pos t ons draw ng or cover page listing th s drawing respons b lity solely for the des gn shown The su tab l ty and use of this design for any the responsib l ty of the Bu ld ng Des gner per ANSI/TPI 1 Sec 2 For more information see general notes page ITW-BCG www itwbcg com TPI www tpinst org WTCA www sbc ndustry com ICC www iccsafe org

WILLIAM H. KRICK LICENSE No. 70861 STATE OF FLORIDA PROFESSIONAL ENGINEER
06/04/2014

TC LL	30.0 PSF	REF	R9114- 93082
TC DL	10 0 PSF	DATE	06/04/14
BC DL	10.0 PSF	DRW	HCUSR9114 14155007
BC LL	0.0 PSF	HC-ENG	WHK/WHK
TOT.LD.	50.0 PSF	SEQN-	42500
DUR.FAC.	1.25	FROM	JMW
SPACING	24.0"	JREF-	1V6X487_Z05

THIS DWG PREPARED FROM COMPUTER INPUT (LOADS & DIMENSIONS) SUBMITTED BY TRUSS MFR

(14-085--0'Neal Roofing /Walks Exxon -- 3221 W Hwy 90 Lake City, FL - HJ1A 1 Jack)

Value Set 13B (Effective 6/1/2013)

Top chord 2x4 SP #1
Bot chord 2x4 SP #1

Lumber value set "13B" uses design values approved 1/30/2013 by ALSC

Deflection meets L/240 live and L/180 total load Creep increase factor for dead load is 1 50

119 mph wind, 15 00 ft mean hgt, ASCE 7-10, CLOSED bldg, Located anywhere in roof, RISK CAT III OR IV, EXP B, wind TC DL=3.5 psf, wind BC DL=5 0 psf GCpi(+/-)=0.18

Wind loads and reactions based on MWFRS with additional C&C member design

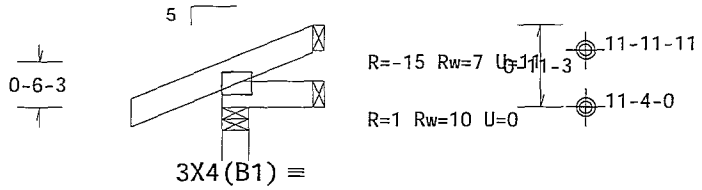

Design Crit FBC2010Com/TPI-2007(STD)

PLT TYP Wave FT/RT=10%(0%)/0(0) 13 02 07 0228.14 QTY 1 FL/-/5/-/-/R/- Scale =.5"/Ft.

ALPINE
ITW Building Components Group Inc.
Orlando FL, 32837
FL COA #0 278

WARNING READ AND FOLLOW ALL NOTES ON THIS SHEET!
IMPORTANT FURNISH THIS DESIGN TO ALL CONTRACTORS INCLUDING INSTALLERS

Trusses require extreme care in fabricating handling sh pp ng install ng and brac ng Re to follow the latest ed t on of BCSI (Bu lding Component Safety Informat on by TPI and WTCA) fo pract ces prior to performing these funct ons Installers shall provide temporary bracing per Unless noted otherwise top chord shall have properly attached structural sheathing and bottom chord shall have a properly attached r g d ce l ing Locat ons shown for permanent lateral restraint of webs shall have brac ng installed per BCSI sect ons B3 B7 or B10 as appl cable

ITW Bu ld ng Components Group Inc (ITWBCG) shall not be respons ble for any dev at on fr m th des gn any fa lure to bu ld the truss n conformance w th ANSI/TPI 1 or for handl ng sh pping nstallation & brac ng of trusses Apply plates to each face of truss and posit on as shown above and on the Joint Deta ls unless noted otherw se Refer to drawings 160A-Z for standard plate posit ons A seal on this draw ng or cover page l sting this drawing ndicates acceptance of profess onal engineer ng respons b l ty solely for the design shown The su tab l ty and use of this design for any s ng e bu ld the responsibil ty of the Building Designer per ANSI/TPI 1 Sec 2 For more nformation see general notes page ITW-BCG www itwbcg com TPI www tp nst org WTCA www sbc ndustry com ICC www iccsafe org

WILLIAM H. KRICK LICENSE No. 70861 STATE OF FLORIDA PROFESSIONAL ENGINEER
06/04/2014

TC LL	30.0 PSF	REF	R9114- 93083
TC DL	10.0 PSF	DATE	06/04/14
BC DL	10.0 PSF	DRW	HCUSR9114 14155008
BC LL	0.0 PSF	HC-ENG	WHK/WHK
TOT.LD.	50.0 PSF	SEQN-	42506
DUR.FAC.	1.25	FROM	JMW
SPACING	24.0"	JREF-	1V6X487_Z05

(14-085--0 Neal Roofing /Walks Exxon -- 3221 W Hwy 90 Lake City, FL - HJ3 3 Jack)

Value Set 13B (Effective 6/1/2013)

Top chord 2x6 SP #2
Bot chord 2x4 SP #1

Lumber value set 13B' uses design values approved 1/30/2013 by ALSC

Deflection meets L/240 live and L/180 total load Creep increase factor for dead load is 1 50

119 mph wind, 15 00 ft mean hgt, ASCE 7-10, CLOSED bldg, Located anywhere in roof, RISK CAT III OR IV, EXP B, wind TC DL=3 5 psf, wind BC DL=5.0 psf. GCpi(+/-)=0.18

Wind loads and reactions based on MWFRS with additional C&C member design

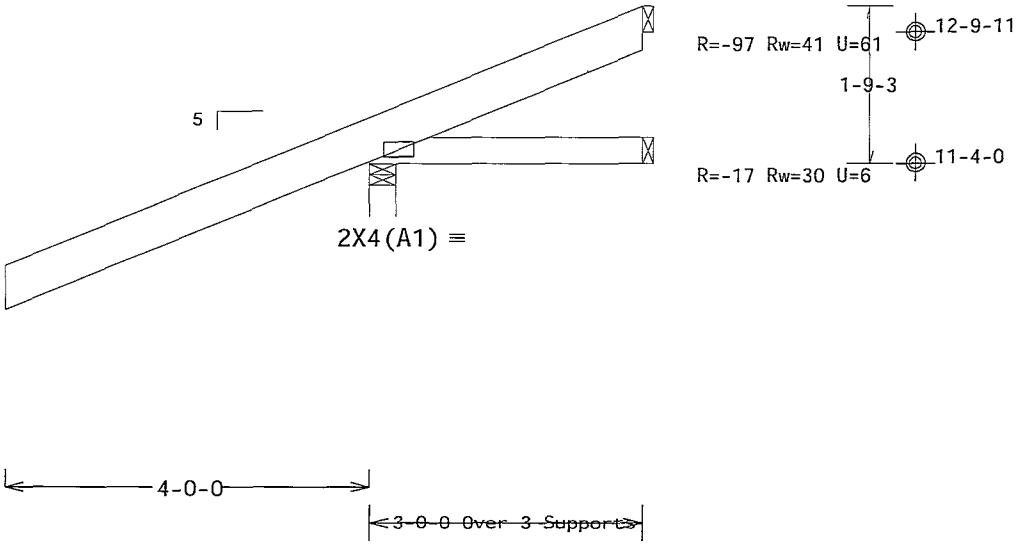

Design Crit FBC2010Com/TPI-2007(STD)

PLT TYP Wave FT/RT=10%(0%)/0(0) 13.03.07.0228.14 QTY 3 FL/-/5/-/-/R/- Scale =.5"/Ft.

ALPINE
ITW Building Components Group Inc.
Orlando FL, 32837
FL COA #0 278

WARNING READ AND FOLLOW ALL NOTES ON THIS SHEET!
IMPORTANT FURNISH THIS DESIGN TO ALL CONTRACTORS INCLUDING INSTALLERS

Trusses require extreme care n fabricating handling sh pp ng install ng and bracing Re to ng follow the latest ed t on of BCSI (Building Component Safety Informat on by TPI and WTCA) for safety pract ces pr or to perform ng these functions Installers shall prov de temporary bracing per BCSI Unless noted otherwise top chord shall have properly attached structural sheathing and bottom chord shall have a properly attached rigid ceiling Locations shown for permanent lateral restraint of webs shall have bracing nstalled per BCSI sections B3 87 or B10 as applicable

ITW Bu ld ng Components Group Inc (ITWBCG) shall not be respons ble for any dev ation from th design any failure to bu ld the truss n conformance w th ANSI/TPI 1 or for handling sh pp ng nstallat on & brac ng of trusses Apply plates to each face of truss and pos t on as shown above and on the Joint Deta ls unless noted otherw se Refer to drawings 160A-Z for standard plate posit ons A seal on th draw ng or cover page listing this draw ng nd cates acceptance of profess onal eng neer ng respons b l ty solely for the des gn shown The suitabil ty and use of th s des gn for any structure the respons b l ty of the Bu ld ng Designer per ANSI/TPI 1 Sec 2 For more information see general notes page ITW-BCG www itwbcg com TPI www tpinst org WTCA www sbcindustry com ICC www ccsafe org

WILLIAM H. KRICK LICENSE No. 70861 STATE OF FLORIDA PROFESSIONAL ENGINEER
06/04/2014

TC LL	30.0 PSF	REF	R9114- 93084
TC DL	10.0 PSF	DATE	06/04/14
BC DL	10.0 PSF	DRW	HCUSR9114 14155096
BC LL	0.0 PSF	HC-ENG	WHK/WHK
TOT.LD.	50.0 PSF	SEQN-	42497
DUR.FAC.	1.25	FROM	JMW
SPACING	24.0"	JREF-	1V6X487_Z05

(14-085--0 Neal Roofing /Walks Exxon -- 3221 W Hwy 90 Lake City, FL - HJ3A 3 Jack)

Value Set 13B (Effective 6/1/2013)

Top chord 2x4 SP #1
Bot chord 2x4 SP #1

Lumber value set "13B uses design values approved 1/30/2013 by ALSC

Deflection meets L/240 live and L/180 total load Creep increase factor for dead load is 1 50

119 mph wind, 15 00 ft mean hgt, ASCE 7-10, CLOSED bldg, Located anywhere in roof, RISK CAT III OR IV, EXP B, wind TC DL=3 5 psf, wind BC DL=5 0 psf GCpi(+/-)=0 18

Wind loads and reactions based on MWFRS with additional C&C member design

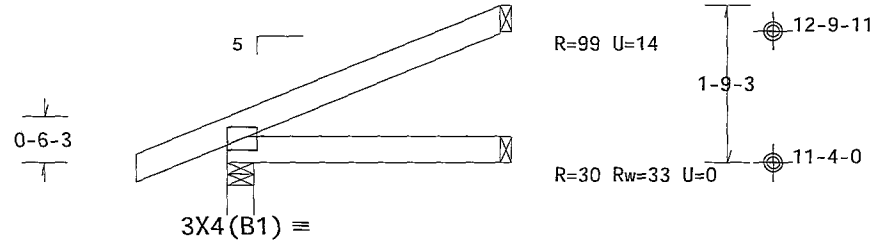

Design Crit FBC2010Com/TPI-2007(STD)

PLT TYP Wave FT/RT=10%(0%)/0(0) 13 02 07 0228.14 QTY 1 FL/-/5/-/-/R/- Scale =.5"/Ft.

ALPINE
ITW Building Components Group Inc.
Orlando FL, 32837
FL COA #0 278

WARNING READ AND FOLLOW ALL NOTES ON THIS SHEET
IMPORTANT FURNISH THIS DESIGN TO ALL CONTRACTORS (NCLUDING INSTALLERS

Trusses require extreme care n fabr cating handl ng sh pp ng nstall ng and bracing Re to ng follow the latest edit on of BCSI (Bu ld ng Component Safety Informat on by TPI and WTCA) ro practices prior to performing these functions Installers shall prov de temporary bracing per Unless noted otherw se top chord shall have properly attached structural sheathing and bottom chord shall have a properly attached rigid ceiling Locations shown for permanent lateral restraint of webs shall have brac ng installed per BCSI sect ons B3 B7 or B10 as appl cable

ITW Bu lding Components Group Inc (ITWBCG) shall not be respons ble for any dev ation from th s design any failure to bu ld the truss n conformance with ANSI/TPI 1 or for handl ng sh pp ng nstall at on & brac ng of trusses Apply plates to each face of truss and pos t on as shown above and on the Joint Deta ls unless noted otherw se Refer to drawings 160A-Z for standard plate posit ons A seal on this draw ng or cover page listing this drawing nd cates acceptance of profess onal eng neer ng respons b l ty solely for the des gn shown The su tabil ty and use of this design for any p rt cular s the responsib lity of the Bu ld ng Designer per ANSI/TPI 1 Sec 2 For more information see general notes page ITW-BCG www twbcg com TPI www tp nst org WTCA www sbcindustry com ICC www iccsafe org

WILLIAM H. KRICK LICENSE No 70861 STATE OF FLORIDA PROFESSIONAL ENGINEER
06/04/2014

TC LL	30.0 PSF	REF	R9114- 93085
TC DL	10.0 PSF	DATE	06/04/14
BC DL	10.0 PSF	DRW	HCUSR9114 14155097
BC LL	0.0 PSF	HC-ENG	WHK/WHK
TOT.LD.	50.0 PSF	SEQN-	42499
DUR.FAC.	1.25	FROM	JMW
SPACING	24.0"	JREF-	1V6X487_Z05

(14-085--0 Neal Roofing /Walks Exxon -- 3221 W Hwy 90 Lake City FL - HJ5 5 Jack)

Value Set 13B (Effective 6/1/2013)

Top chord 2x6 SP #2
Bot chord 2x4 SP #1

Lumber value set "13B' uses design values approved 1/30/2013 by ALSC

Deflection meets L/240 live and L/180 total load Creep increase factor for dead load is 1 50

119 mph wind, 15 00 ft mean hgt, ASCE 7-10, CLOSED bldg, not located within 4 50 ft from roof edge, RISK CAT III OR IV, EXP B, wind TC DL=3 5 psf wind BC DL=5 0 psf GCpi(+/-)=0 18

Wind loads and reactions based on MWFRS with additional C&C member design

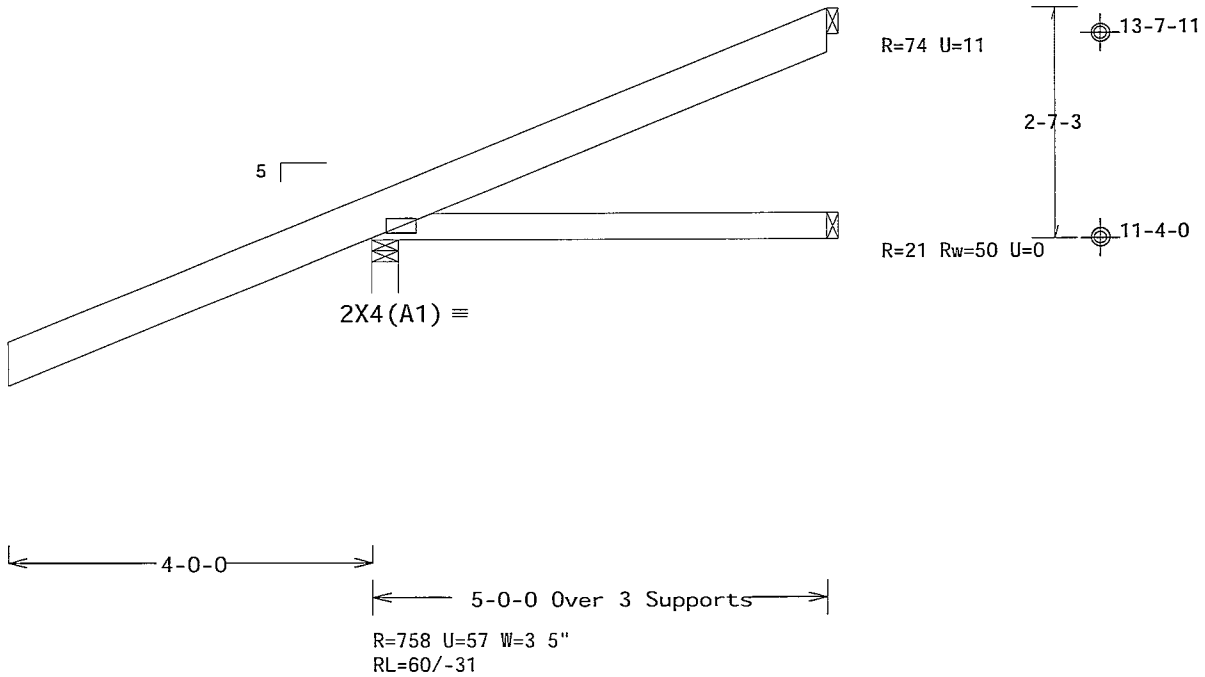

Design Crit FBC2010Com/TPI-2007(STD)

PLT TYP. Wave | FT/RT=10%(0%)/0(0) | 13 02 07 0228.14 | QTY 3 | FL/-/5/-/-/R/- | Scale =.5"/Ft.

ALPINE
ITW Building Components Group Inc.
Orlando FL, 32837
FL COA #0 278

WARNING READ AND FOLLOW ALL NOTES ON THIS SHEET!
IMPORTANT FURNISH THIS DESIGN TO ALL CONTRACTORS INCLUDING INSTALLERS

Trusses requ re extreme care n fabr cat ng handl ng shipping installing and brac ng Re ference follow the latest edition of BCSI (Build ng Component Safety Informat on by TPI and WTCA) for safety pract ces pr or to perform ng these funct ons Installers shall prov de temporary bracing per BCSI Unless noted otherwise top chord shall have properly attached structural sheathing and bottom chord shall have a properly attached r g d ce l ng Locat ons shown for permanent lateral restraint of webs shall have brac ng installed per BCSI sect ons B3 B7 or B10 as appl cable

ITW Bu ld ng Components Group Inc (ITWBCG) shall not be respons ble for any dev ation from this design any fa lure to build the truss n conformance w th ANSI/TPI 1 or for handl ng sh pping nstallation & brac ng of trusses Apply plates to each face of truss and pos t on as shown above and on the Joint Deta ls unless noted otherwise Refer to draw ngs 160A-2 for standard plate pos tions Any deal ng th draw ng or cover page listing this drawing ndicates acceptance of profess onal eng neer responsibility solely for the design shown The suitabil ty and use of th s des gn for any the responsibility of the Building Designer per ANSI/TPI 1 Sec 2 For more nformation see general notes page ITW-BCG www twbcg com TPI www tp nst org WTCA www sbc ndustry com ICC www iccsafe org

WILLIAM H. KRICK LICENSE No. 70861 STATE OF FLORIDA PROFESSIONAL ENGINEER
06/04/2014

TC LL	30.0 PSF	REF	R9114- 93086
TC DL	10.0 PSF	DATE	06/04/14
BC DL	10.0 PSF	DRW	HCUSR9114 14155098
BC LL	0.0 PSF	HC-ENG	WHK/WHK
TOT.LD.	50.0 PSF	SEQN-	42502
DUR.FAC.	1.25	FROM	JMW
SPACING	24.0"	JREF-	1V6X487_Z05

(14-085--0'Neal Roofing /Walks Exxon -- 3221 W Hwy 90 Lake City, FL - HJ5A 5 Jack)

Value Set 13B (Effective 6/1/2013)

Top chord 2x4 SP #1
Bot chord 2x4 SP #1

Lumber value set '13B' uses design values approved 1/30/2013 by ALSC

Deflection meets L/240 live and L/180 total load Creep increase factor for dead load is 1 50

119 mph wind, 15 00 ft mean hgt, ASCE 7-10, CLOSED bldg, Located anywhere in roof, RISK CAT III OR IV, EXP B, wind TC DL=3.5 psf, wind BC DL=5 0 psf GCpi(+/-)=0 18

Wind loads and reactions based on MWFRS with additional C&C member design

MWFRS loads based on trusses located at least 7.50 ft. from roof edge

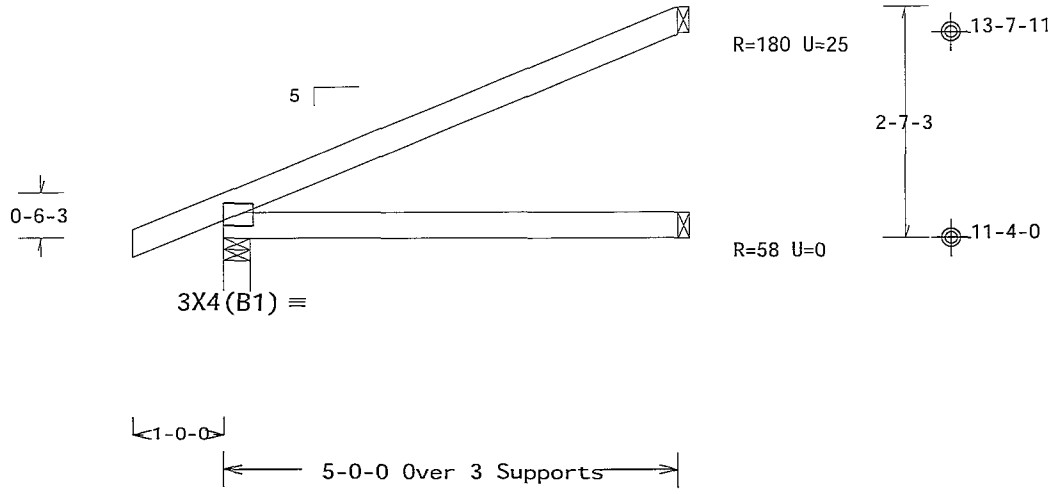

Design Crit FBC2010Com/TPI-2007(STD)

PLT TYP. Wave FT/RT=10%(0%)/0(0) 13 02 07 0228.14 QTY 1 FL/-/5/-/-/R/- Scale =.5"/Ft.

ALPINE
ITW Building Components Group Inc.
Orlando FL, 32837
FL COA #0 278

WARNING READ AND FOLLOW ALL NOTES ON THIS SHEET!
IMPORTANT FURNISH THIS DESIGN TO ALL CONTRACTORS INCLUDING INSTALLERS

Trusses require extreme care n fabricating handling sh pp ng nstall ng and bracing Re to follow the latest edition of BCSI (Building Component Safety Informat on by TPI and WTCA) fo practices prior to performing these functions Installers shall prov de temporary brac ng Unless noted otherwise top chord shall have properly attached structural sheath ng and bot shall have a properly attached rigid ceil ng Locations shown for permanent lateral restraint of webs shall have brac ng installed per BCSI sect ons B3 B7 or B10 as appl cable

ITW Build ng Components Group Inc (ITWBCG) shall not be respons ble for any dev at on f om this des gn any fa lure to build the truss n conformance w th ANSI/TPI 1 or for handl ng sh pping nstallation & brac ng of trusses Apply plates to each face of truss and pos t on as shown above and on the Joint Details unless noted otherw se Refer to drawings 160A-Z for standard plate pos t ons Any seal on th draw ng or cover page list ng this draw ng nd cates acceptance of profess onal eng neer ng responsibility solely for the design shown The su tab lity and use of th s design for any the responsib l ty of the Bu ld ng Designer per ANSI/TPI 1 Sec 2 For more nformat on see general notes page ITW-BCG www itwbcg com TPI www tp nst org WTCA www sbc ndustry com ICC www iccsafe org

WILLIAM H. KRICK LICENSE No 70861 STATE OF FLORIDA PROFESSIONAL ENGINEER
06/04/2014

TC LL	30.0 PSF	REF	R9114- 93087
TC DL	10.0 PSF	DATE	06/04/14
BC DL	10.0 PSF	DRW	HCUSR9114 14155099
BC LL	0.0 PSF	HC-ENG	WHK/WHK
TOT.LD	50.0 PSF	SEQN-	42503
DUR.FAC.	1.25	FROM	JMW
SPACING	24.0"	JREF-	1V6X487_Z05

THIS DWG PREPARED FROM COMPUTER INPUT (LOADS & DIMENSIONS) SUBMITTED BY TRUSS MFR

(14-085--0 Neal Roofing /Walks Exxon -- 3221 W Hwy 90 Lake City, FL - HJ7 9 10 13 Hip Jack Girder)

Value Set 13B (Effective 6/1/2013)

Top chord 2x6 SP M-26 T2 2x6 SP #2
Bot chord 2x4 SP #1
Webs 2x4 SP #3

Lumber value set "13B' uses design values approved 1/30/2013 by ALSC

Negative reaction(s) of -271# MAX (See below) from a non-wind load case requires uplift connection

119 mph wind, 15 00 ft mean hgt, ASCE 7-10, CLOSED bldg, not located within 9 00 ft from roof edge, RISK CAT III OR IV, EXP B, wind TC DL=3 5 psf, wind BC DL=5 0 psf GCpi(+/-)=0 18

Deflection meets L/240 live and L/180 total load Creep increase factor for dead load is 1 50

Special loads
------(Lumber Dur Fac =1 25 / Plate Dur.Fac.=1 25)
TC- From 0 plf at -5 66 to 162 plf at 0.00
TC- From 83 plf at 0 00 to 151 plf at 4.80
TC- From 149 plf at 4 80 to 222 plf at 9.90
BC- From 0 plf at -5 66 to 4 plf at 0 00
BC- From 2 plf at 0 00 to 2 plf at 9 90
TC- -1449 34 lb Conc Load at 1 48
TC- -194 26 lb Conc Load at 4 31
TC- 147 53 lb Conc Load at 7 13
BC- -194 42 lb Conc Load at 1 48
BC- -33 54 lb Conc Load at 4 31
BC- 41 42 lb Conc Load at 7 13

Wind loads and reactions based on MWFRS

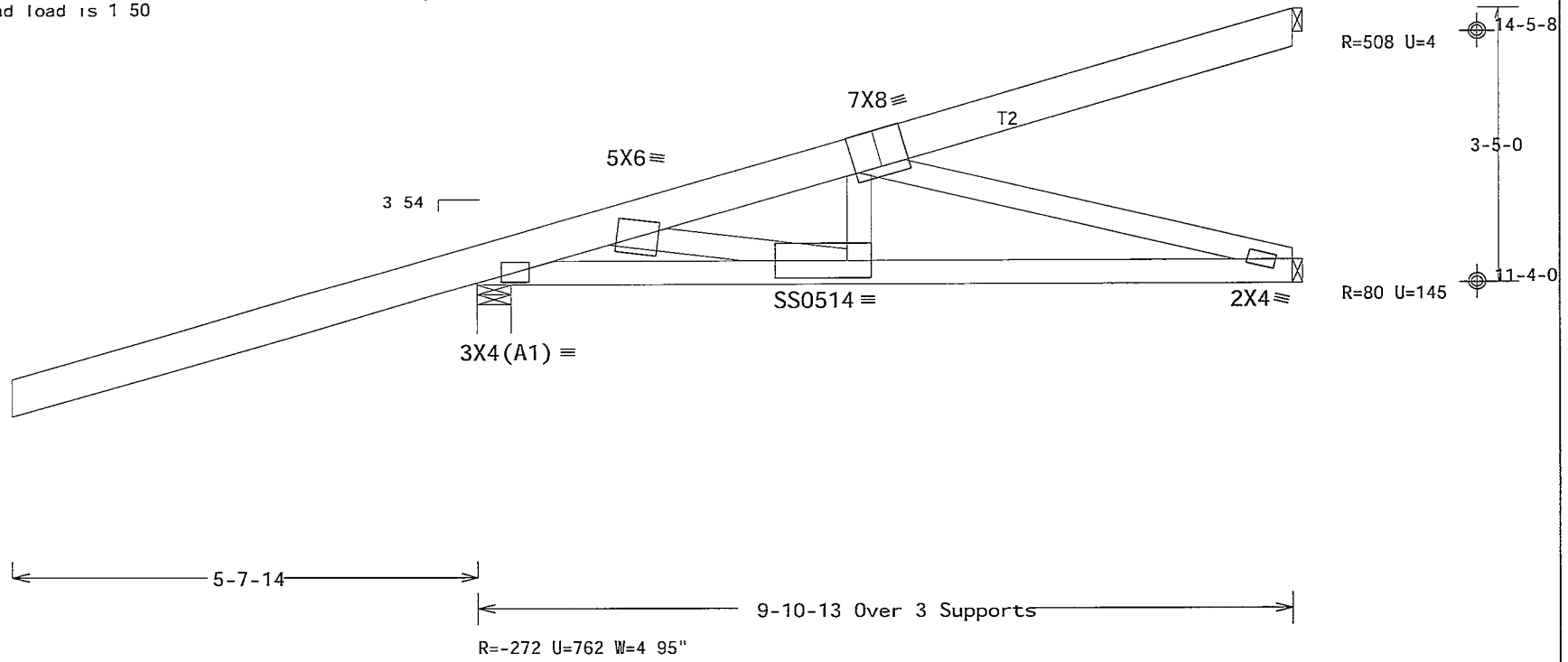

Design Crit FBC2010Com/TPI-2007(STD)

PLT TYP. 18 Gauge HS,Wave FT/RT=10%(0%)/0(0) 13.02.07.0228 14 QTY 1 FL/-/5/-/-/R/- Scale =.5"/Ft.

ALPINE
ITW Building Components Group Inc.
Orlando FL, 32837
FL COA #0 278

WARNING READ AND FOLLOW ALL NOTES ON THIS SHEET!
IMPORTANT FURNISH THIS DESIGN TO ALL CONTRACTORS INCLUDING INSTALLERS

Trusses requ re extreme care n fabr cat ng handl ng sh pping installing and brac ng Re to follow the latest edition of BCSI (Bu ld ng Component Safety Informat on by TPI and WTCA) fo pract ces prior to perform ng these funct ons Installers shall prov de temporary bracing pe Unless noted otherwise top chord shall have properly attached structural sheathing and bo shall have a properly attached rigid ce l ng Locations shown for permanent lateral restra shall have brac ng installed per BCSI sect ons B3 B7 or B10 as appl cable

ITW Bu ld ng Components Group Inc (ITWBCG) shall not be respons ble for any dev at on from this design any fa lure to bu ld the truss n conformance w th ANSI/TPI 1 or for handl ng sh pp ng nstallat on & brac ng of trusses Apply plates to each face of truss and pos t on as shown above and on the Joint Deta ls unless noted otherw se Refer to drawings 160A-Z for standard plate pos t ons Any seal on th draw ng or cover page l st ng this draw ng ndicates acceptance of profess onal eng neer r respons bility solely for the design shown The su tabil ty and use of th s design for any the responsibility of the Building Designer per ANSI/TPI 1 Sec 2 For more nformat on see general notes page ITW-BCG www twbcg com TPI www tp nst org WTCA www sbc ndustry com ICC www ccsafe org

WILLIAM H. KRICK LICENSE No 70861 STATE OF FLORIDA PROFESSIONAL ENGINEER
06/04/2014

TC LL	30 0 PSF	REF	R9114- 93088
TC DL	10.0 PSF	DATE	06/04/14
BC DL	10.0 PSF	DRW	HCUSR9114 14155100
BC LL	0.0 PSF	HC-ENG	WHK/WHK
TOT.LD	50 0 PSF	SEQN-	42544
DUR.FAC.	1.25	FROM	JMW
SPACING	24.0"	JREF-	1V6X487_Z05

(14-085--0 Neal Roofing /Walks Exxon -- 3221 W Hwy 90 Lake City, FL - HJ7A 9 10'13 Hip Jack Girder)

Value Set 13B (Effective 6/1/2013)

Top chord 2x6 SP #2
Bot chord 2x4 SP #1

Lumber value set "13B' uses design values approved 1/30/2013 by ALSC

Wind loads and reactions based on MWFRS

Negative reaction(s) of -534# MAX (See below) from a non-wind load case requires uplift connection

119 mph wind, 15.00 ft mean hgt, ASCE 7-10, CLOSED bldg, not located within 9 00 ft from roof edge, RISK CAT III OR IV, EXP B, wind TC DL=3 5 psf, wind BC DL=5 0 psf GCpi(+/-)=0 18

Deflection meets L/240 live and L/180 total load Creep increase factor for dead load is 1.50

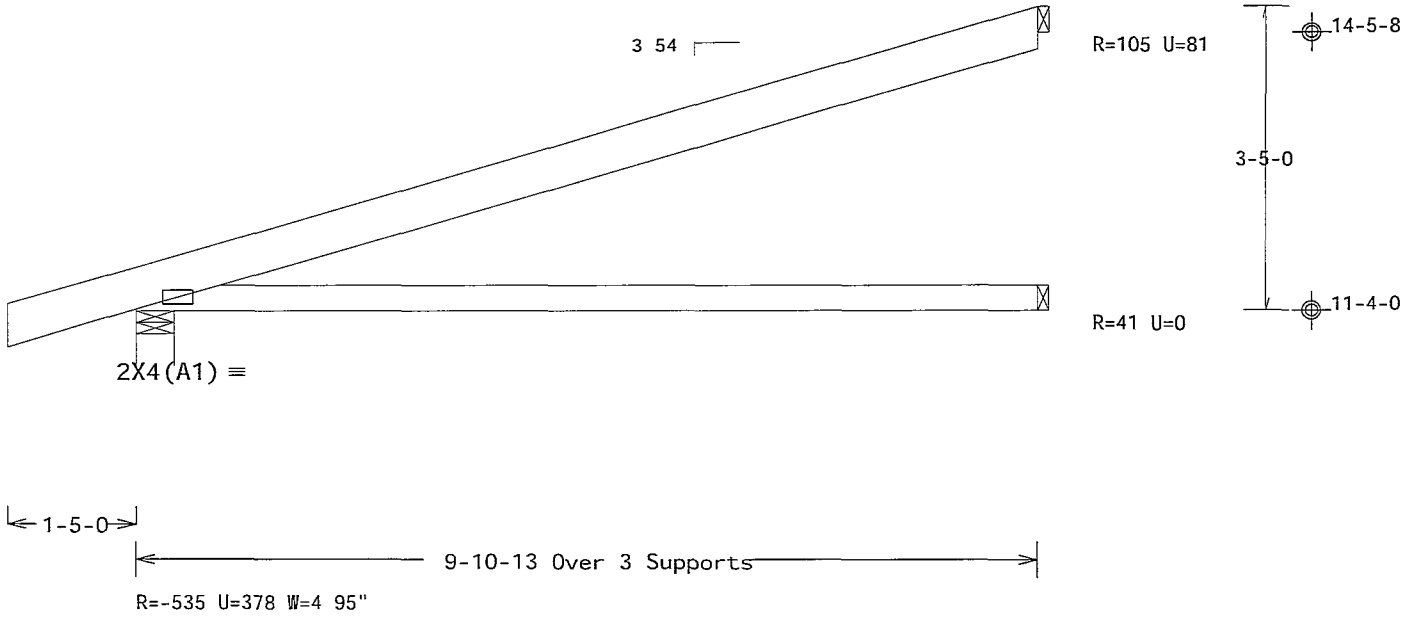

Design Crit FBC2010Com/TPI-2007(STD)

PLT TYP Wave FT/RT=10%(0%)/0(0) 13.02.07.0228.14 QTY 1 FL/-/5/-/-/R/- Scale =.5"/Ft.

ALPINE
ITW Building Components Group Inc.
Orlando FL, 32837
FL COA #0 278

WARNING READ AND FOLLOW ALL NOTES ON THIS SHEET!
IMPORTANT FURNISH THIS DESIGN TO ALL CONTRACTORS INCLUDING INSTALLERS

Trusses requ re extreme care n fabr cating handl ng shipping nstalling and bracing Re to follow the latest ed t on of BCSI (Bu lding Component Safety Informat on by TPI and WTCA) for pract ces pr or to performing these functions Installers shall prov de temporary bracing Unless noted otherw se top chord shall have properly attached structural sheathing and bottom chord shall have a properly attached r g d ce ling Locat ons shown for permanent lateral restraint of webs shall have bracing installed per BCSI sections B3 B7 or B10 as applicable

ITW Bu lding Components Group Inc (ITWBCG) shall not be responsible for any dev at on from this design any failure to bu ld the truss n conformance with ANSI/TPI 1 or for handl ng sh pping nstallation & brac ng of trusses Apply plates to each face of truss and pos t on as shown above and on the Joint Data is unless noted otherwise Refer to draw ngs 160A-Z for standard plate positions A seal on this draw ng or cover page l sting this drawing nd cates acceptance of profess onal engineer n responsib l ty solely for the des gn shown The su tability and use of this des gn for any structure is the respons b l ty of the Build ng Designer per ANSI/TPI 1 Sec 2 For more information see general notes page ITW-BCG www twbcg com TPI www tp nst org WTCA www sbcindustry com ICC www ccsafe org

WILLIAM H. KRICK LICENSE No 70861 STATE OF FLORIDA PROFESSIONAL ENGINEER
06/04/2014

TC LL	30.0 PSF	REF	R9114- 93089
TC DL	10.0 PSF	DATE	06/04/14
BC DL	10.0 PSF	DRW	HCUSR9114 14155101
BC LL	0.0 PSF	HC-ENG	WHK/WHK
TOT.LD	50.0 PSF	SEQN-	42518
DUR.FAC.	1.25	FROM	JMW
SPACING	24.0"	JREF-	1V6X487_Z05

THIS DWG PREPARED FROM COMPUTER INPUT (LOADS & DIMENSIONS) SUBMITTED BY TRUSS MFR

(14-085--0 Neal Roofing /Walks Exxon -- 3221 W Hwy 90 Lake City FL - V1 37 5"3 Valley)

Value Set 13B (Effective 6/1/2013)

Top chord 2x4 SP #1
Bot chord 2x4 SP #1
Webs 2x4 SP #3

Lumber value set "13B" uses design values approved 1/30/2013 by ALSC

Deflection meets L/240 live and L/180 total load Creep increase factor for dead load is 1 50

MWFRS loads based on trusses located at least 7 90 ft from roof edge

119 mph wind, 15 80 ft mean hgt, ASCE 7-10, CLOSED bldg, not located within 9 00 ft from roof edge, RISK CAT III OR IV, EXP B, wind TC DL=3 5 psf, wind BC DL=5 0 psf GCpi(+/-)=0 18

Wind loads and reactions based on MWFRS with additional C&C member design

In lieu of structural panels use purlins to brace all flat TC @ 24" OC

See DWG VAL160100212 for valley details

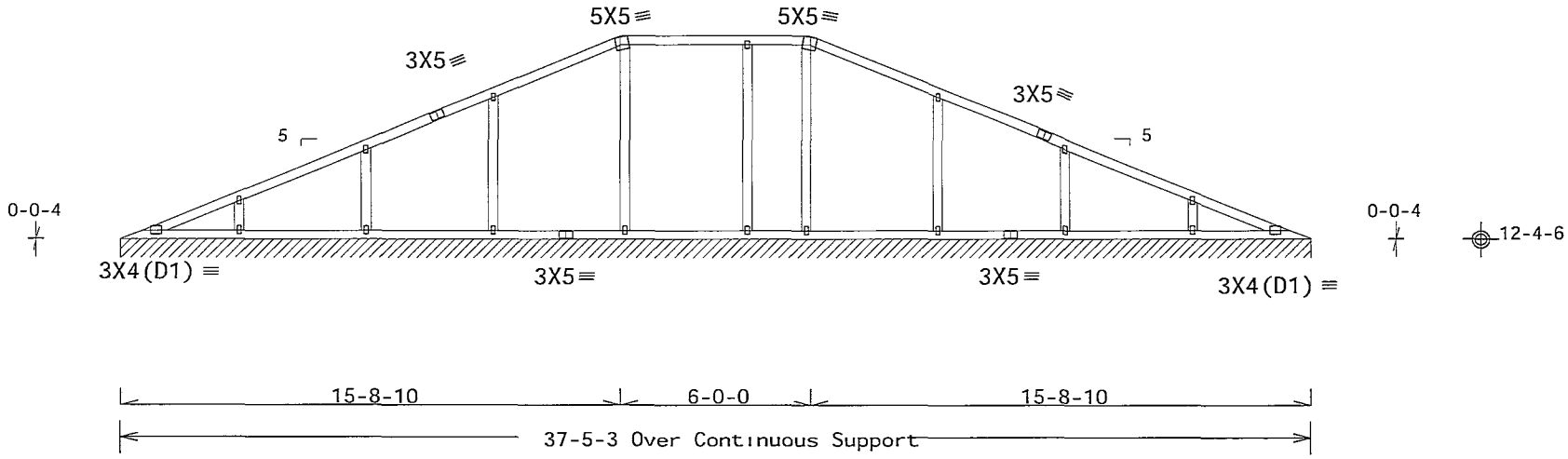

R=102 PLF U=2 PLF W=37-5-3
RL=2/-2 PLF

Note All Plates Are 1.5X3 Except As Shown.

Design Crit FBC2010Com/TPI-2007(STD)

PLT TYP. Wave FT/RT=10%(0%)/0(0) 13.02.07.0228.14 QTY 1 FL/-/5/-/-/R/- Scale =.1875"/Ft.

ALPINE
ITW Building Components Group Inc.
Orlando FL, 32837
FL COA #0 278

WARNING READ AND FOLLOW ALL NOTES ON THIS SHEET!
IMPORTANT FURNISH THIS DESIGN TO ALL CONTRACTORS INCLUDING INSTALLERS

Trusses requ re extreme care n fabricating handling shipping installing and brac ng Re ng follow the latest edition of BCSI (Bu ld ng Component Safety Informat on by TPI and WTCA) for safety pract ces pr or to perform ng these funct ons Installers shall prov de temporary bracing Unless noted otherwise top chord shall have properly attached structural sheathing and bottom chord shall have a properly attached rigid ceil ng Locations shown for permanent lateral restraint of webs shall have brac ng installed per BCSI sections B3 B7 or B10 as appl cable

ITW Bu ld ng Components Group Inc (ITWBCG) shall not be respons ble for any dev ation from this design any fa lure to build the truss n conformance w th ANSI/TPI 1 or for hand l ng sh pping nstallation & bracing of trusses Apply plates to each face of truss and position as shown above and on the Joint Deta ls unless noted otherw se Refer to drawings 160A-Z for standard plate posit ons Seal on this drawing or cover page list ng this drawing ndicates acceptance of professional eng neering responsibility solely for the design shown The suitability and use of this design for any the responsibil ty of the Building Designer per ANSI/TPI 1 Sec 2 For more informat on see general notes page ITW-BCG www itwbcg com TPI www tpinst org WTCA www sbcindustry com ICC www iccsafe org

WILLIAM H. KRICK LICENSE No 70861 STATE OF FLORIDA PROFESSIONAL ENGINEER
06/04/2014

TC LL	30.0 PSF	REF	R9114- 93090
TC DL	10 0 PSF	DATE	06/04/14
BC DL	10.0 PSF	DRW	HCUSR9114 14155102
BC LL	0.0 PSF	HC-ENG	WHK/WHK
TOT.LD.	50 0 PSF	SEQN-	42516
DUR.FAC.	1.25	FROM	JMW
SPACING	24.0"	JREF-	1V6X487_Z05

(14-085--0 Neal Roofing /Walks Exxon -- 3221 W Hwy 90 Lake City, FL - V2 33 5"3 Valley)

Value Set 13B (Effective 6/1/2013)

Top chord 2x4 SP #1
Bot chord 2x4 SP #1
Webs 2x4 SP #3

Lumber value set '13B" uses design values approved 1/30/2013 by ALSC

Deflection meets L/240 live and L/180 total load Creep increase factor for dead load is 1 50

MWFRS loads based on trusses located at least 8 31 ft from roof edge

119 mph wind, 16 63 ft mean hgt, ASCE 7-10, CLOSED bldg, not located within 9 00 ft from roof edge, RISK CAT III OR IV, EXP B, wind TC DL=3 5 psf, wind BC DL=5 0 psf GCpi(+/-)=0 18

Wind loads and reactions based on MWFRS with additional C&C member design

In lieu of structural panels use purlins to brace all flat TC @ 24" OC

See DWG VAL160100212 for valley details

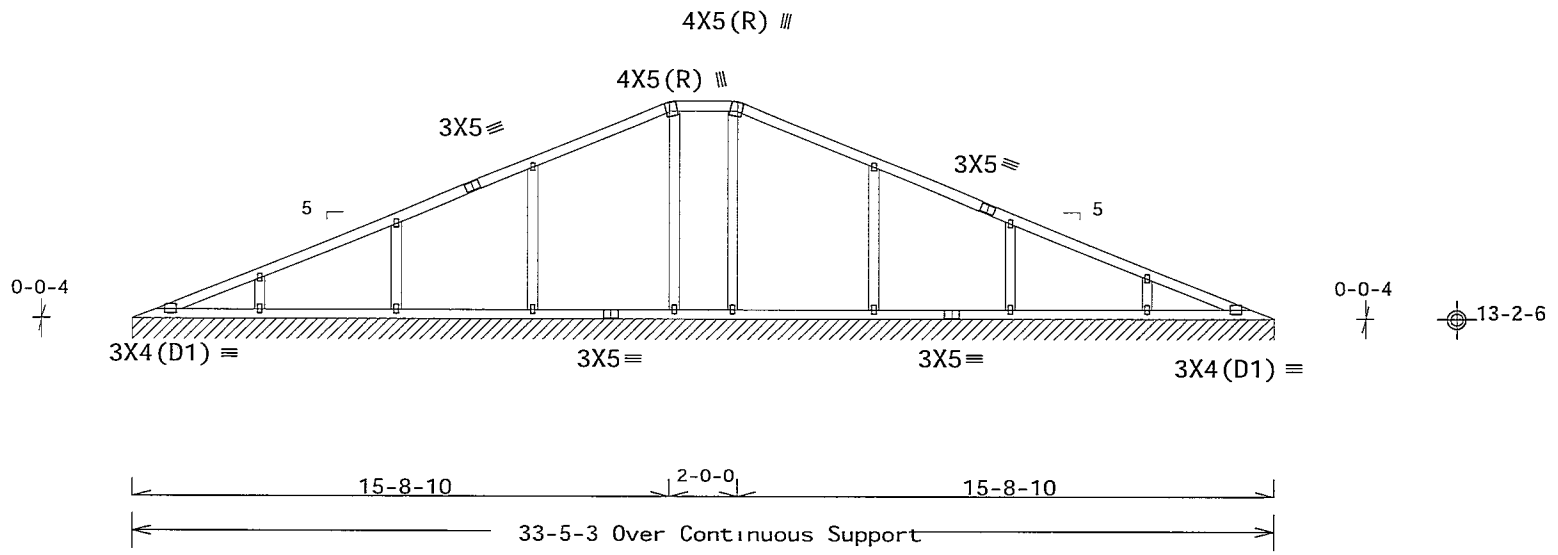

R=102 PLF U=3 PLF W=33-5-3
RL=2/-2 PLF

Note All Plates Are 1.5X3 Except As Shown.

Design Crit FBC2010Com/TPI-2007(STD)

PLT TYP Wave FT/RT=10%(0%)/0(0) 13.02.07.0228 14 QTY 1 FL/-/5/-/-/R/- Scale =.1875"/Ft.

ALPINE
ITW Building Components Group Inc.
Orlando FL, 32837
FL COA #0 278

WARNING READ AND FOLLOW ALL NOTES ON THIS SHEET
IMPORTANT FURNISH THIS DESIGN TO ALL CONTRACTORS INCLUDING INSTALLERS

Trusses require extreme care n fabricating handl ng sh pp ng nstall ng and brac ng Re d ng follow the latest ed t on of BCSI (Bu ld ng Component Safety Informat on by TPI and WTCA) for safety pract ces pr or to perform ng these functions Installers shall prov de temporary bracing per Unless noted otherwise top chord shall have properly attached structural sheathing and bottom chords shall have a properly attached rig d ce l ng Locat ons shown for permanent lateral restraint of webs shall have brac ng installed per BCSI sect ons B3 B7 or B10 as appl cable

ITW Build ng Components Group Inc (ITWBCG) shall not be respons ble for any dev at on from this des gn any fa lure to bu ld the truss n conformance w th ANSI/TPI 1 or for handling sh pp ng nstall at on & brac ng of trusses Apply plates to each face of truss and pos t ons as shown above and on the Joint Deta ls unless noted otherw se Refer to draw ngs 160A-Z for standard plate pos t ons A seal on this draw ng or cover page l st ng this draw ng nd cates acceptance of profess onal eng neering responsib lity solely for the design shown The su tab lity and use of this design for any the responsib l ty of the Build ng Des gner per ANSI/TPI 1 Sec 2 For more nformat on see general notes page ITW-BCG www twbcg com TPI www tp nst org WTCA www sbc ndustry com ICC www ccsafe org

WILLIAM H. KRICK LICENSE No 70861 STATE OF FLORIDA PROFESSIONAL ENGINEER
06/04/2014

TC LL	30.0 PSF	REF	R9114- 93091
TC DL	10.0 PSF	DATE	06/04/14
BC DL	10.0 PSF	DRW	HCUSR9114 14155103
BC LL	0.0 PSF	HC-ENG	WHK/WHK
TOT.LD.	50 0 PSF	SEQN-	42512
DUR.FAC.	1.25	FROM	JMW
SPACING	24.0"	JREF-	1V6X487_Z05

THIS DWG PREPARED FROM COMPUTER INPUT (LOADS & DIMENSIONS) SUBMITTED BY TRUSS MFR

(14-085--0 Neal Roofing /Walks Exxon -- 3221 W Hwy 90 Lake City, FL - V3 29 5 3 Valley)

Value Set 13B (Effective 6/1/2013)

Top chord 2x4 SP #1
Bot chord 2x4 SP #1
Webs 2x4 SP #3

Lumber value set '13B' uses design values approved 1/30/2013 by ALSC

See DWG VAL160100212 for valley details

MWFRS loads based on trusses located at least 8 63 ft from roof edge

119 mph wind, 17 25 ft mean hgt, ASCE 7-10, CLOSED bldg, not located within 9 00 ft from roof edge, RISK CAT III OR IV, EXP B, wind TC DL=3 5 psf wind BC DL=5 0 psf GCpi(+/-)=0 18

Wind loads and reactions based on MWFRS with additional C&C member design

Deflection meets L/240 live and L/180 total load. Creep increase factor for dead load is 1 50

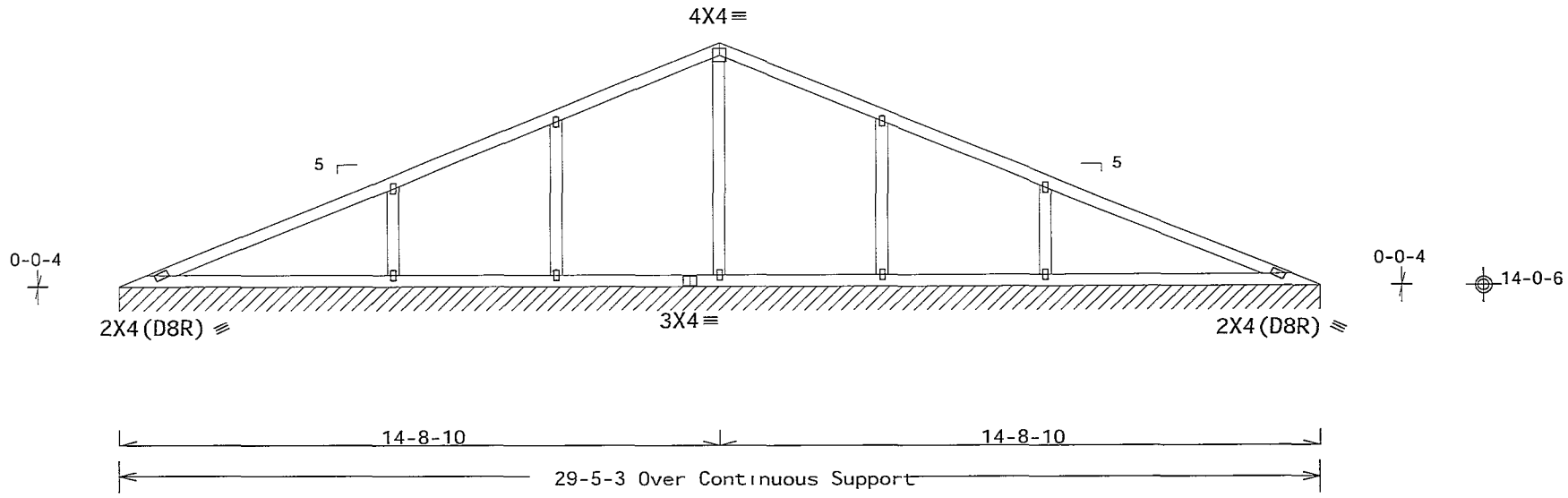

R=102 PLF U=2 PLF W=29-5-3
RL=3/-3 PLF

Note All Plates Are 1.5X3 Except As Shown

Design Crit FBC2010Com/TPI-2007(STD)

PLT TYP Wave FT/RT=10%(0%)/0(0) 13 02 07 0228.14 QTY 1 FL/-/5/-/-/R/- Scale =.25"/Ft.

ALPINE
ITW Building Components Group Inc.
Orlando FL, 32837
FL COA #0 278

WARNING READ AND FOLLOW ALL NOTES ON THIS SHEET!
IMPORTANT FURNISH THIS DESIGN TO ALL CONTRACTORS INCLUDING INSTALLERS

Trusses requ re extreme care n fabr cat ng handl ng shipping nstalling and brac ng Re ... follow the latest edition of BCSI (Bu ld ng Component Safety Informat on by TPI and WTCA) fo ... pract ces pr or to perform ng these funct ons Installers shall prov de temporary bracing ... Unless noted otherwise top chord shall have properly attached structural sheathing and bot ... shall have a properly attached r g d ce l ng Locat ons shown for permanent lateral restraint of webs shall have brac ng nstalled per BCSI sections B3 B7 or B10 as appl cable

ITW Building Components Group Inc (ITWBCG) shall not be responsible for any dev at on from th s des gn any failure to bu ld the truss n conformance with ANSI/TPI 1 or for handling sh pp ng ... brac ng of trusses Apply plates to each face of truss and pos t on as shown above and on the joint Deta ls unless noted otherwise Refer to draw ngs 160A-Z for standard plate pos tions ... draw ng or cover page listing th s drawing nd cates acceptance of profess onal eng neer ... respons b l ty solely for the des gn shown The suitabil ty and use of th s des gn for any ... the responsibility of the Build ng Designer per ANSI/TPI 1 Sec 2 For more nformation see general notes page ITW-BCG www itwbcg com TPI www tp nst org WTCA www sbc ndustry com ICC www ccsafe org

WILLIAM H. KRICK LICENSE No 70861 STATE OF FLORIDA PROFESSIONAL ENGINEER
06/04/2014

TC LL	30 0 PSF	REF	R9114- 93092
TC DL	10.0 PSF	DATE	06/04/14
BC DL	10.0 PSF	DRW	HCUSR9114 14155104
BC LL	0.0 PSF	HC-ENG	WHK/WHK
TOT.LD	50 0 PSF	SEQN-	42510
DUR.FAC.	1.25	FROM	JMW
SPACING	24.0"	JREF-	1V6X487_Z05

THIS DWG PREPARED FROM COMPUTER INPUT (LOADS & DIMENSIONS) SUBMITTED BY TRUSS MFR

(14-085--0 Neal Roofing /Walks Exxon -- 3221 W Hwy 90 Lake City FL - V4 25 5"3 Valley)

Value Set 13B (Effective 6/1/2013)

Top chord 2x4 SP #1
Bot chord 2x4 SP #1
Webs 2x4 SP #3

Lumber value set '13B' uses design values approved 1/30/2013 by ALSC

See DWG VAL160100212 for valley details

MWFRS loads based on trusses located at least 8 84 ft from roof edge

119 mph wind 17 67 ft mean hgt, ASCE 7-10, CLOSED bldg, not located within 9 00 ft from roof edge, RISK CAT III OR IV, EXP B, wind TC DL=3 5 psf, wind BC DL=5 0 psf GCpi(+/-)=0.18

Wind loads and reactions based on MWFRS with additional C&C member design

Deflection meets L/240 live and L/180 total load. Creep increase factor for dead load is 1.50.

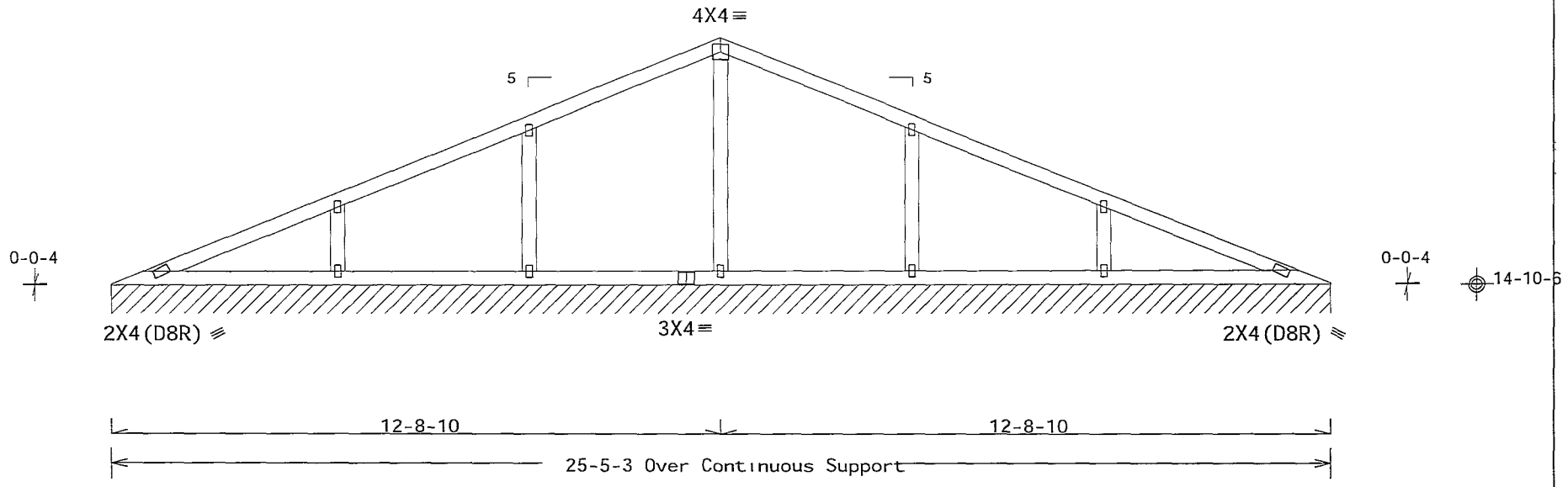

R=102 PLF U=2 PLF W=25-5-3
RL=2/-2 PLF

Note All Plates Are 1.5X3 Except As Shown

Design Crit FBC2010Com/TPI-2007(STD)

PLT TYP. Wave FT/RT=10%(0%)/0(0) 13 08:07 07228 14 QTY 1 FL/-/5/-/-/R/- Scale =.3125"/Ft.

ALPINE
ITW Building Components Group Inc.
Orlando FL, 32837
FL COA #0 278

WARNING READ AND FOLLOW ALL NOTES ON THIS SHEET!
IMPORTANT FURNISH THIS DESIGN TO ALL CONTRACTORS INCLUDING INSTALLERS

Trusses require extreme care n fabr cat ng handl ng shipping installing and brac ng Ref to follow the latest ed t on of BCSI (Bu ld ng Component Safety Informat on by TPI and WTCA) for safety pract ces pr or to performing these functions Installers shall prov de temporary bracing per BCSI Unless noted otherw se top chord shall have properly attached structural sheath ng and bottom chord shall have a properly attached rigid ceil ng Locations shown for permanent lateral restraint of webs shall have brac ng installed per BCSI sect ons B3 B7 or B10 as applicable

ITW Building Components Group Inc (ITWBCG) shall not be responsible for any dev ation from this des gn any failure to bu ld the truss n conformance w th ANSI/TPI 1 or for handling sh pping installation & brac ng of trusses Apply plates to each face of truss and pos t on as shown above and on the Jo nt Details unless noted otherw se Refer to drawings 160A-Z for standard plate posit ons A seal on these draw ng or cover page l st ng th s draw ng nd cates acceptance of professional eng neering responsib l ty solely for the design shown The su tability and use of this design for any structure is the respons b l ty of the Bu ld ng Des gner per ANSI/TPI 1 Sec 2 For more information see This design general notes page ITW-BCG www twbcg com TPI www tp nst org WTCA www sbc ndustry com ICC www iccsafe org

WILLIAM H. KRICK LICENSE No. 70861 STATE OF FLORIDA PROFESSIONAL ENGINEER
06/04/2014

TC LL	30 0 PSF	REF	R9114- 93093
TC DL	10.0 PSF	DATE	06/04/14
BC DL	10.0 PSF	DRW	HCUSR9114 14155105
BC LL	0.0 PSF	HC-ENG	WHK/WHK
TOT.LD.	50.0 PSF	SEQN-	42515
DUR.FAC.	1.25	FROM	JMW
SPACING	24.0"	JREF-	1V6X487_Z05

THIS DWG PREPARED FROM COMPUTER INPUT (LOADS & DIMENSIONS) SUBMITTED BY TRUSS MFR

(14-085--0 Neal Roofing /Walks Exxon -- 3221 W Hwy 90 Lake City FL - V5 21 5'3 Valley)

Value Set 13B (Effective 6/1/2013)

Top chord 2x4 SP #1
Bot chord 2x4 SP #1
Webs 2x4 SP #3

Lumber value set "13B" uses design values approved 1/30/2013 by ALSC

See DWG VAL160100212 for valley details

119 mph wind, 18 09 ft mean hgt, ASCE 7-10, CLOSED bldg, not located within 4 50 ft from roof edge, RISK CAT III OR IV, EXP B, wind TC DL=3 5 psf, wind BC DL=5 0 psf GCpi(+/-)=0 18

Wind loads and reactions based on MWFRS with additional C&C member design

Deflection meets L/240 live and L/180 total load. Creep increase factor for dead load is 1 50

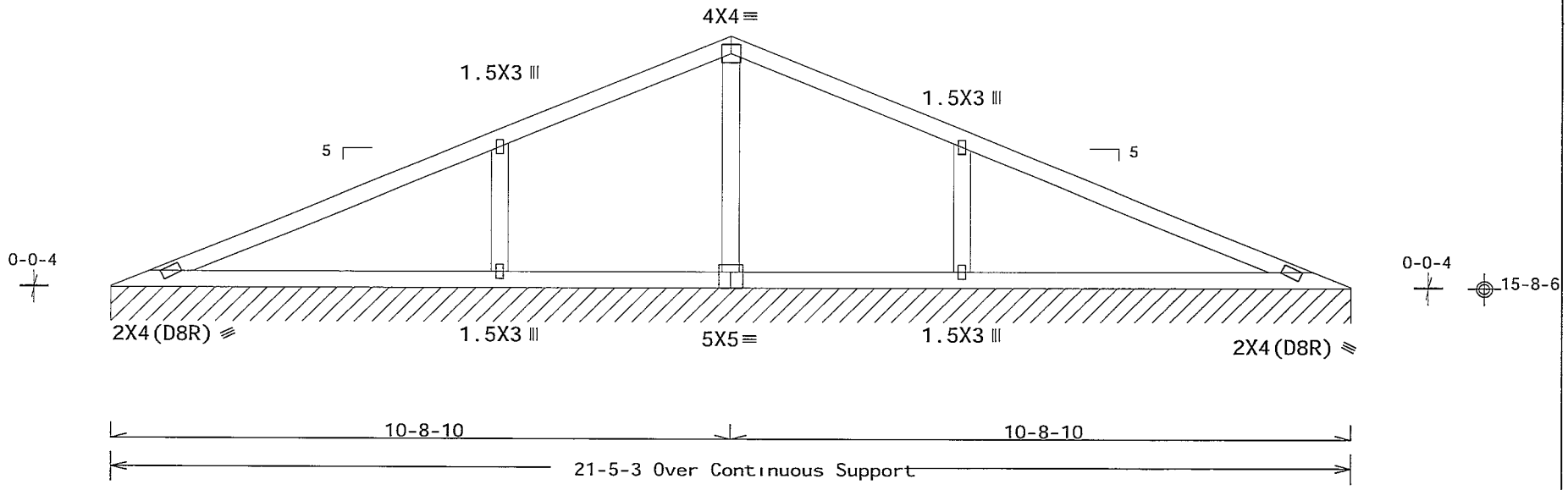

R=102 PLF U=4 PLF W=21-5-3
RL=2/-2 PLF

Design Crit FBC2010Com/TPI-2007(STD)

PLT TYP. Wave FT/RT=10%(0%)/0(0) 13.02.07.02.28.14 QTY.1 FL/-/5/-/-/R/- Scale =.375"/Ft.

ALPINE
ITW Building Components Group Inc.
Orlando FL, 32837
FL COA #0 278

WARNING READ AND FOLLOW ALL NOTES ON THIS SHEET!
IMPORTANT FURNISH THIS DESIGN TO ALL CONTRACTORS INCLUDING INSTALLERS

Trusses require extreme care n fabr cat ng handl ng shipp ng nstalling and bracing Re follow the latest ed tion of BCSI (Bu ld ng Component Safety Informat on by TPI and WTCA) for pract ces pr or to performing these funct ons Installers shall prov de temporary bracing per BCSI. Unless noted otherwise top chord shall have properly attached structural sheathing and botto chord shall have a properly attached rigid ceil ng Locations shown for permanent lateral restrai of webs shall have brac ng installed per BCSI sect ons B3 B7 or B10 as appl cable

ITW Building Components Group Inc (ITWBCG) shall not be responsible for any dev at on fro this design any failure to build the truss n conformance with ANSI/TPI 1 or for handl ng sh pp ng nstallation & brac ng of trusses Apply plates to each face of truss and position as shown above and on th Jo nt Deta ls unless noted otherw se Refer to drawings 160A-Z for standard plate posit ons A s drawing or cover page list ng this draw ng ndicates acceptance of profess onal eng neer ng responsibility solely for the design shown The suitabil ty and use of th s des gn for any str the respons bility of the Build ng Designer per ANSI/TPI 1 Sec 2 For more information see Th general notes page ITW-BCG www twbcg com TPI www tp nst org WTCA www sbcindustry com ICC www ccsafe org

WILLIAM R. KRICK LICENSE No. 70861 STATE OF FLORIDA PROFESSIONAL ENGINEER
06/04/2014

TC LL	30.0 PSF	REF	R9114- 93094
TC DL	10.0 PSF	DATE	06/04/14
BC DL	10.0 PSF	DRW	HCUSR9114 14155106
BC LL	0.0 PSF	HC-ENG	WHK/WHK
TOT.LD.	50.0 PSF	SEQN-	42509
DUR.FAC.	1.25	FROM	JMW
SPACING	24.0"	JREF-	1V6X487_Z05

THIS DWG PREPARED FROM COMPUTER INPUT (LOADS & DIMENSIONS) SUBMITTED BY TRUSS MFR

(14-085--0 Neal Roofing /Walks Exxon -- 3221 W Hwy 90 Lake City, FL - V6 17'5"3 Valley)

Value Set 13B (Effective 6/1/2013)

Top chord 2x4 SP #1
Bot chord 2x4 SP #1
Webs 2x4 SP #3

Lumber value set "13B' uses design values approved 1/30/2013 by ALSC

See DWG VAL160100212 for valley details

119 mph wind, 18 50 ft mean hgt, ASCE 7-10, CLOSED bldg, not located within 4 50 ft from roof edge, RISK CAT III OR IV, EXP B, wind TC DL=3 5 psf, wind BC DL=5 0 psf GCpi(+/-)=0.18

Wind loads and reactions based on MWFRS with additional C&C member design

Deflection meets L/240 live and L/180 total load. Creep increase factor for dead load is 1.50

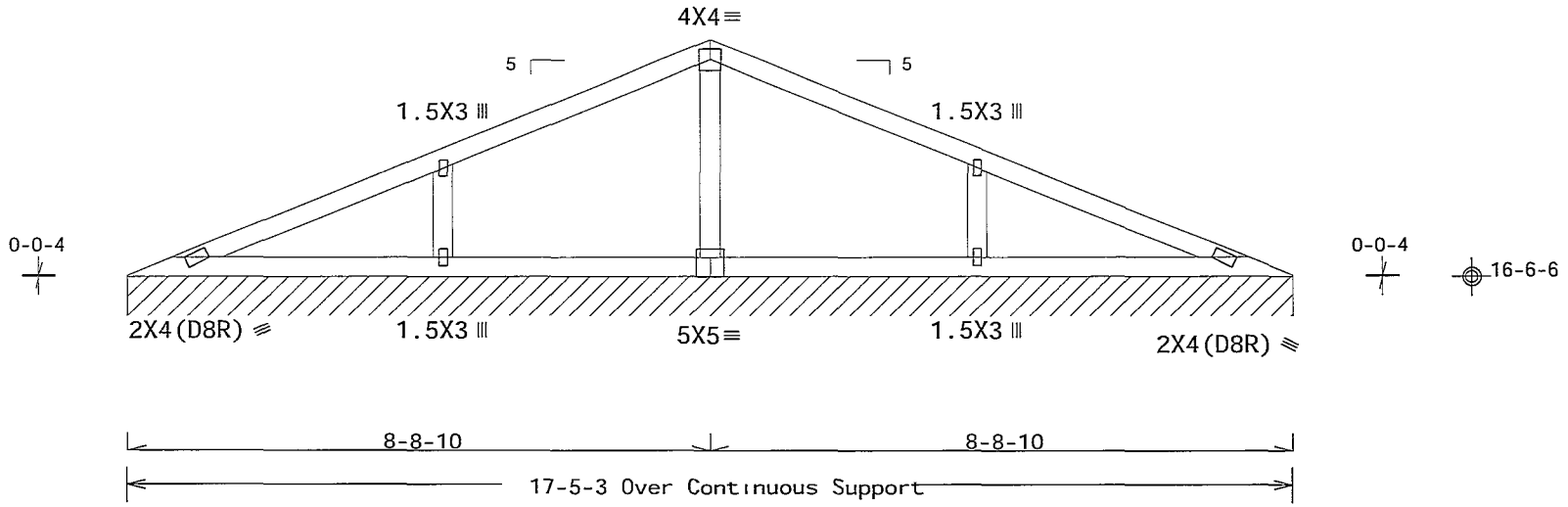

R=102 PLF U=4 PLF W=17-5-3
RL=2/-2 PLF

Design Crit FBC2010Com/TPI-2007(STD)

PLT TYP Wave FT/RT=10%(0%)/0(0) 13 08:07 0228.14 QTY 1 FL/-/5/-/-/R/- Scale =.375"/Ft.

ALPINE
ITW Building Components Group Inc.
Orlando FL, 32837
FL COA #0 278

WARNING READ AND FOLLOW ALL NOTES ON THIS SHEET!
IMPORTANT FURNISH THIS DESIGN TO ALL CONTRACTORS INCLUDING INSTALLERS

Trusses require extreme care n fabricating handling shipping install ng and bracing Refer to BCSI Building Component Safety Informat on by TPI and WTCA) for safety practices prior to performing these functions Installers shall prov de temporary brac ng per BCSI Unless noted otherwise top chord shall have properly attached structural sheathing and bottom chord shall have a properly attached rigid ceiling Locations shown for permanent lateral restra nt of webs shall have bracing installed per BCSI sect ons B3 B7 or B10 as applicable

ITW Build ng Components Group Inc (ITWBCG) shall not be respons ble for any dev ation from this design any fa lure to build the truss n conformance w th ANSI/TPI 1 or for handl ng sh pping nstallation & brac ng of trusses Apply plates to each face of truss and pos t on as shown above and on the Jo nt Deta ls unless noted otherwise Refer to drawings 160A-Z for standard plate posit ons A seal on this drawing or cover page listing this drawing ndicates acceptance of profess onal eng neer ng respons bility solely for the design shown The suitabil ty and use of th s des gn for any structure is the responsibility of the Building Designer per ANSI/TPI 1 Sec 2 For more nformation see this design general notes page ITW-BCG www itwbcg com TPI www tp nst org WTCA www sbc ndustry com ICC www iccsafe org

WILLIAM H. KRICK LICENSE No. 70861 STATE OF FLORIDA PROFESSIONAL ENGINEER
06/04/2014

TC LL	30.0 PSF	REF R9114- 93095
TC DL	10.0 PSF	DATE 06/04/14
BC DL	10.0 PSF	DRW HCUSR9114 14155107
BC LL	0.0 PSF	HC-ENG WHK/WHK
TOT.LD	50.0 PSF	SEQN- 42514
DUR.FAC.	1.25	FROM JMW
SPACING	24.0"	JREF- 1V6X487_Z05

THIS DWG PREPARED FROM COMPUTER INPUT (LOADS & DIMENSIONS) SUBMITTED BY TRUSS MFR

(14-085--0 Neal Roofing /Walks Exxon -- 3221 W Hwy 90 Lake City, FL - V7 13 5'3 Valley)

Value Set 13B (Effective 6/1/2013)

Top chord 2x4 SP #1
Bot chord 2x4 SP #1
Webs 2x4 SP #3

Lumber value set '13B" uses design values approved 1/30/2013 by ALSC

See DWG VAL160100212 for valley details

119 mph wind, 18.92 ft mean hgt, ASCE 7-10, CLOSED bldg, not located within 4 50 ft from roof edge, RISK CAT III OR IV, EXP B, wind TC DL=3 5 psf, wind BC DL=5 0 psf GCpi(+/-)=0.18

Wind loads and reactions based on MWFRS with additional C&C member design

Deflection meets L/240 live and L/180 total load Creep increase factor for dead load is 1 50

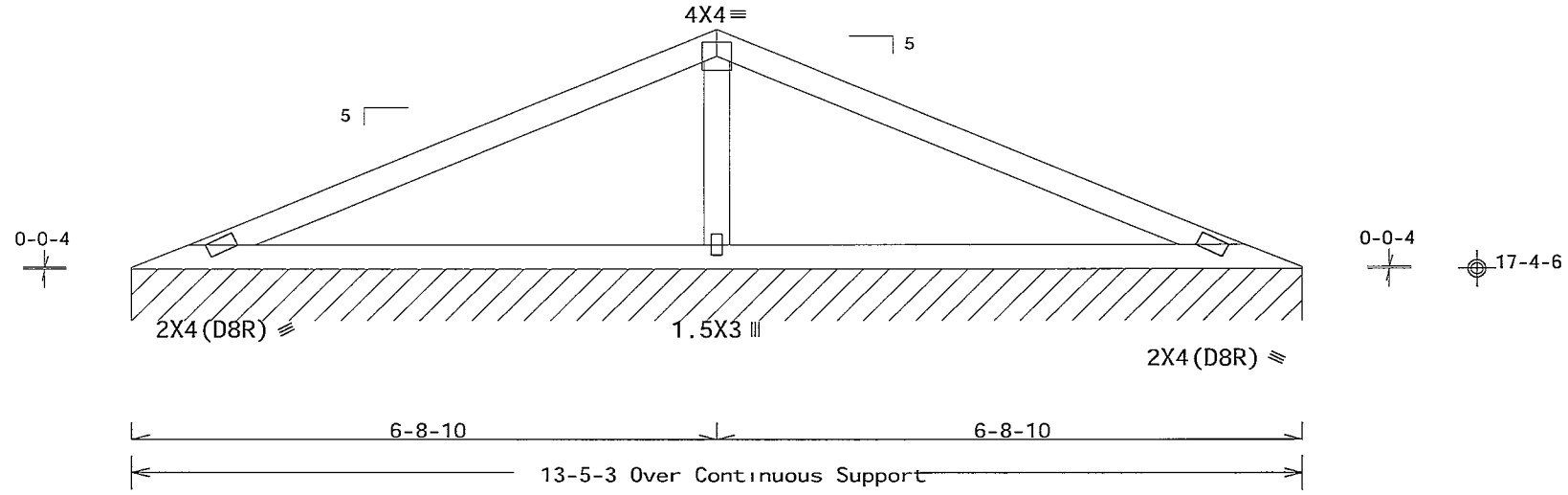

R=102 PLF U=4 PLF W=13-5-3
RL=2/-2 PLF

Design Crit FBC2010Com/TPI-2007(STD)

PLT TYP. Wave FT/RT=10%(0%)/0(0) 13 02 07 0228 14 QTY.1 FL/-/5/-/-/R/- Scale =.5"/Ft.

ALPINE
ITW Building Components Group Inc.
Orlando FL, 32837
FL COA #0 278

WARNING READ AND FOLLOW ALL NOTES ON THIS SHEET!
IMPORTANT FURNISH THIS DESIGN TO ALL CONTRACTORS INCLUDING INSTALLERS

Trusses require extreme care n fabr cat ng handling sh pping install ng and brac ng Refer to and follow the latest edition of BCSI (Build ng Component Safety Informat on by TPI and WTCA) for safety pract ces prior to performing these functions Installers shall prov de temporary brac ng per BCSI Unless noted otherwise top chord shall have properly attached structural sheath ng and bottom chord shall have a properly attached r gid ceiling Locations shown for permanent lateral restra nt of webs shall have bracing installed per BCSI sections B3 B7 or B10 as appl cable

ITW Build ng Components Group Inc (ITWBCG) shall not be responsible for any dev at on from this des gn any failure to bu ld the truss n conformance with ANSI/TPI 1 or for handl ng sh pp ng nstallation & brac ng of trusses Apply plates to each face of truss and pos t on as shown above and on the Jo nt Deta ls unless noted otherw se Refer to draw ngs 160A-Z for standard plate pos t ons A sealed th s draw ng or cover page l st ng th s draw ng nd cates acceptance of professional eng neer ng respons bil ty solely for the design shown The su tab lity and use of th s design for any structure is the responsib l ty of the Bu ld ng Des gner per ANSI/TPI 1 Sec 2 For more nformat on see This job general notes page ITW-BCG www itwbcg com TPI www tp nst org WTCA www sbc ndustry com ICC www ccsafe org

WILLIAM H. KRICK
LICENSE
No. 70861
STATE OF FLORIDA
PROFESSIONAL ENGINEER

06/04/2014

TC LL	30.0 PSF	REF	R9114- 93096
TC DL	10.0 PSF	DATE	06/04/14
BC DL	10.0 PSF	DRW	HCUSR9114 14155108
BC LL	0.0 PSF	HC-ENG	WHK/WHK
TOT LD.	50 0 PSF	SEQN-	42511
DUR.FAC.	1.25	FROM	JMW
SPACING	24.0"	JREF-	1V6X487_Z05

(14-085--0 Neal Roofing /Walks Exxon -- 3221 W Hwy 90 Lake City, FL - V8 9 5 3 Valley)

Value Set 13B (Effective 6/1/2013)

Top chord 2x4 SP #1
Bot chord 2x4 SP #1
Webs 2x4 SP #3

Lumber value set '13B' uses design values approved 1/30/2013 by ALSC

See DWG VAL160100212 for valley details

119 mph wind, 19 34 ft mean hgt, ASCE 7-10, CLOSED bldg, Located anywhere in roof, RISK CAT III OR IV, EXP B, wind TC DL=3 5 psf, wind BC DL=5 0 psf GCpi(+/-)=0 18

Wind loads and reactions based on MWFRS with additional C&C member design

Deflection meets L/240 live and L/180 total load Creep increase factor for dead load is 1 50

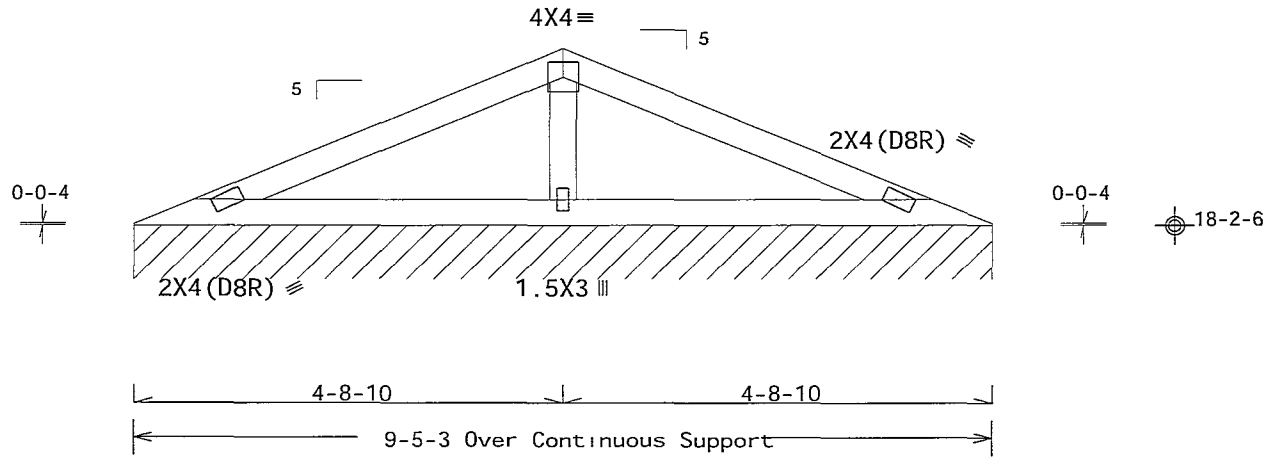

R=101 PLF U=4 PLF W=9-5-3
RL=2/-2 PLF

Design Crit FBC2010Com/TPI-2007(STD)

PLT TYP Wave FT/RT=10%(0%)/0(0) 13 03:07:02 28.14 QTY 1 FL/-/5/-/-/R/- Scale =.5"/Ft.

ALPINE
ITW Building Components Group Inc.
Orlando FL, 32837
FL COA #0 278

WARNING READ AND FOLLOW ALL NOTES ON THIS SHEET!
IMPORTANT FURNISH THIS DESIGN TO ALL CONTRACTORS INCLUDING INSTALLERS

Trusses requ re extreme care n fabr cat ng handl ng shipp ng nstalling and brac ng Re follow the latest ed t on of BCSI (Bu ld ng Component Safety Informat on by TPI and WTCA) for pract ces pr or to perform ng these funct ons Installers shall prov de temporary bracing per BCSI Unless noted otherw se top chord shall have properly attached structural sheathing and bott shall have a properly attached r g d ce l ng Locat ons shown for permanent lateral restra shall have brac ng nstalled per BCSI sect ons B3 B7 or B10 as appl cable

ITW Bu lding Components Group Inc (ITWBCG) shall not be respons ble for any dev at on fr any failure to bu ld the truss n conformance with ANSI/TPI 1 or for handl ng sh pp ng brac ng of trusses Apply plates to each face of truss and pos t on as shown above and on Deta ls unless noted otherw se Refer to draw ngs 160A-Z for standard plate pos t ons draw ng or cover page l st ng th s draw ng nd cates acceptance of profess onal eng neering responsib l ty solely for the design shown The suitab lity and use of this design for any the responsibil ty of the Bu ld ng Des gner per ANSI/TPI 1 Sec 2 For more informat on see general notes page ITW-BCG www itwbcg com TPI www tp nst org WTCA www sbcindustry com ICC www iccsafe org

WILLIAM H. KRICK LICENSE No 70861 STATE OF FLORIDA PROFESSIONAL ENGINEER
06/04/2014

TC LL	30.0 PSF	REF	R9114- 93097
TC DL	10.0 PSF	DATE	06/04/14
BC DL	10.0 PSF	DRW	HCUSR9114 14155109
BC LL	0.0 PSF	HC-ENG	WHK/WHK
TOT.LD	50.0 PSF	SEQN-	42508
DUR.FAC.	1.25	FROM	JMW
SPACING	24.0"	JREF-	1V6X487_Z05

THIS DWG PREPARED FROM COMPUTER INPUT (LOADS & DIMENSIONS) SUBMITTED BY TRUSS MFR

(14-085--0 Neal Roofing /Walks Exxon -- 3221 W Hwy 90 Lake City, FL - V9 5 5 3 Valley)

Value Set 13B (Effective 6/1/2013)

Top chord 2x4 SP #1
Bot chord 2x4 SP #1

Lumber value set '13B' uses design values approved 1/30/2013 by ALSC

Deflection meets L/240 live and L/180 total load Creep increase factor for dead load is 1 50

119 mph wind, 19 75 ft mean hgt, ASCE 7-10, CLOSED bldg, Located anywhere in roof, RISK CAT III OR IV, EXP B, wind TC DL=3 5 psf, wind BC DL=5 0 psf GCpi(+/-)=0 18

Wind loads and reactions based on MWFRS with additional C&C member design

See DWG VAL160100212 for valley details

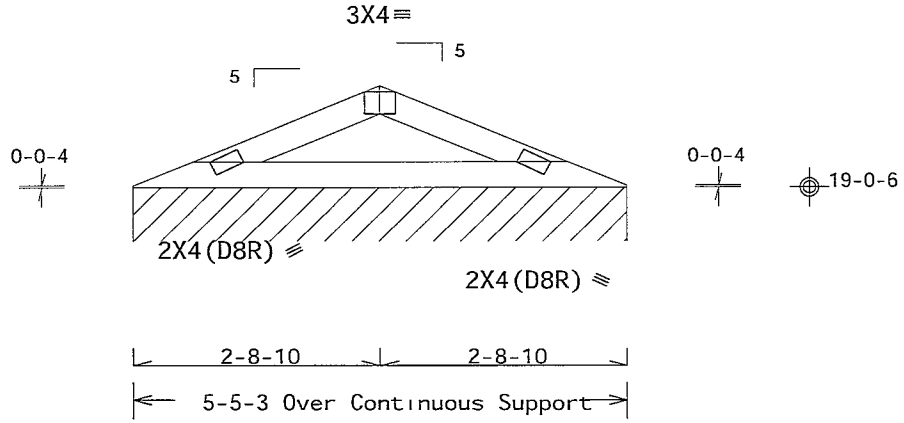

R=101 PLF U=2 PLF W=5-5-3

Design Crit FBC2010Com/TPI-2007(STD)

PLT TYP Wave FT/RT=10%(0%)/0(0) 13 03-07-02-28 14 QTY 1 FL/-/5/-/-/R/- Scale =.5"/Ft.

ALPINE
ITW Building Components Group Inc.
Orlando FL, 32837
FL COA #0 278

WARNING READ AND FOLLOW ALL NOTES ON THIS SHEET!
IMPORTANT FURNISH THIS DESIGN TO ALL CONTRACTORS INCLUDING INSTALLERS

Trusses requ re extreme care n fabr cat ng handl ng shipping install ng and brac ng Re er to BCSI (Bu ld ng Component Safety Informat on by TPI and WTCA) for safety practices pr or to perform ng these funct ons Installers shall prov de temporary brac ng per BCSI Unless noted otherw se top chord shall have properly attached structural sheathing and bottom chord shall have a properly attached rigid ce l ng Locat ons shown for permanent lateral restraint of webs shall have brac ng installed per BCSI sect ons B3 B7 or B10 as appl cable

ITW Bu ld ng Components Group Inc (ITWBCG) shall not be respons ble for any dev at on from the des gn any fa lure to bu ld the truss n conformance with ANSI/TPI 1 or for handl ng sh pp ng Installation & brac ng of trusses Apply plates to each face of truss and pos t on as shown above and on the Joint Detail s unless noted otherw se Refer to draw ngs 160A-Z for standard plate pos t ons A seal on th s drawing or cover page list ng this drawing ndicates acceptance of professional eng neer ng responsibility solely for the design shown The suitability and use of th s design for any str the responsibility of the Build ng Designer per ANSI/TPI 1 Sec 2 For more nformat on see Th general notes page ITW-BCG www itwbcg com TPI www tp nst org WTCA www sbc ndustry com ICC www ccsafe org

WILLIAM H. KRICK LICENSE No 70861 STATE OF FLORIDA PROFESSIONAL ENGINEER
06/04/2014

TC LL	30.0 PSF	REF	R9114- 93098
TC DL	10.0 PSF	DATE	06/04/14
BC DL	10.0 PSF	DRW	HCUSR9114 14155110
BC LL	0.0 PSF	HC-ENG	WHK/WHK
TOT.LD	50.0 PSF	SEQN-	42513
DUR.FAC.	1.25	FROM	JMW
SPACING	24.0"	JREF-	1V6X487_Z05

CLR Reinforcing Member Substitution

This detail is to be used when a Continuous Lateral Restraint (CLR) is specified on a truss design but an alternative web reinforcement method is desired

Notes

This detail is only applicable for changing the specified CLR shown on single ply sealed designs to T-reinforcement or L-reinforecement or scab reinforcement

Alternative reinforcement specified in chart below may be conservative For minimum alternative reinforcement, re-run design with appropriate reinforcement type

Web Member Size	Specified CLR Restraint	Alternative Reinforecement T- or L- Reinf	Scab Reinf
2x3 or 2x4	1 row	2x4	1-2x4
2x3 or 2x4	2 rows	2x6	2-2x4
2x6	1 row	2x4	1-2x6
2x6	2 rows	2x6	2-2x4(*)
2x8	1 row	2x6	1-2x8
2x8	2 rows	2x6	2-2x6(*)

T-reinforcement, L-reinforcement, or scab reinforcement to be same species and grade or better than web member unless specified otherwise on Engineer's sealed design.

(*) Center scab on wide face of web Apply (1) scab to each face of web

T-Reinforcement or L-Reinforcement

Apply to either side of web narrow face Attach with 10d (0.128"x3.0",min) nails at 6" o.c Reinforcing member is a minimum 80% of web member length

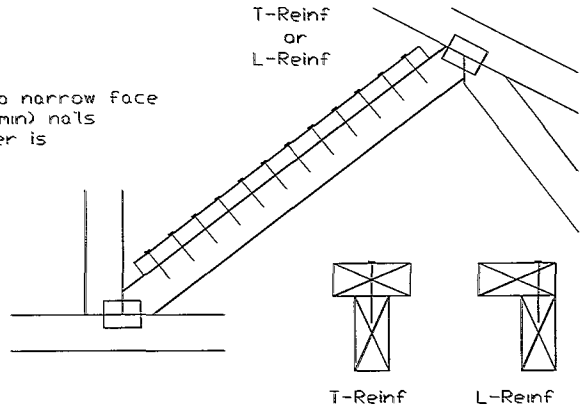

Scab Reinforcement

Apply scab(s) to wide face of web. No more than (1) scab per face Attach with 10d (0.128"x3.0",min) nails at 6" o.c Reinforcing member is a minimum 80% of web member length

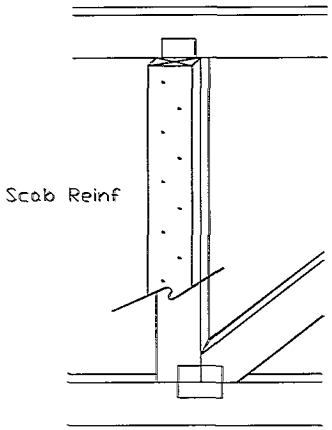

TW
Building Components Group Inc.

Earth City MO 63045

WARNING READ AND FOLLOW ALL NOTES ON THIS DRAWING!
IMPORTANT FURNISH THIS DRAWING TO ALL CONTRACTORS INCLUDING THE INSTALLERS.
Trusses require extreme care in fabricating, handling, shipping, installing and bracing. Refer to and follow the latest edition of BCSI (Building Component Safety Information, by TPI and SBCA) for safety practices prior to performing these functions. Installers shall provide temporary bracing per BCSI. Unless noted otherwise top chord shall have properly attached structural sheathing and bottom chord shall have a properly attached rigid ceiling. Locations shown for permanent lateral restraint of webs shall have bracing installed per BCSI sections B3, B7 or B10, as applicable. Apply plates to each face of truss and position as shown above and on the Joint Details, unless noted otherwise.
Refer to drawings 160A-Z for standard plate positions.
TTW Building Components Group Inc. shall not be responsible for any deviation from this drawing, any failure to build the truss in conformance with ANSI/TPI 1 or for handling, shipping, installation & bracing of trusses.
A seal on this drawing or cover page listing this drawing, indicates acceptance of professional engineering responsibility solely for the design shown. The suitability and use of this drawing for any structure is the responsibility of the Building Designer per ANSI/TPI 1 Sec.2.
For more information see this job's general notes page and these web sites:
TTWBCG: www.ttwbcg.com; TPI: www.tpinst.org; SBCA: www.sbcindustry.org; ICC: www.iccsafe.org

WILLIAM H. KRICK
LICENSE
No 70861
STATE OF
FLORIDA
PROFESSIONAL ENGINEER

06/04/2014

TC LL	PSF	REF CLR Subst
TC DL	PSF	DATE 8/15/13
BC DL	PSF	DRWG BRCLBSUB0813
BC LL	PSF	
TOT LD	PSF	
DUR FAC		
SPACING		

Valley Detail - ASCE 7-10 160 mph, 30' Mean Height, Enclosed, Exp C, Kzt=1 00

Top Chord 2x4 SP #2N SPF #1/#2 DF-L #2 or better
Bot Chord 2x4 SP #2N or SPF #1/#2 or better
Webs 2x4 SP #3, SPF #1/#2, DF-L #2 or better

** Attach each valley to every supporting truss with (2) 16d box (0135" x 35") nails toe-nailed for
ASCE 7-10 160 mph 30' Mean Height, Enclosed Building, Exp C, Wind TC DL=5 psf, Kzt = 100
Or
ASCE 7-10 140 mph 30' Mean Height, Enclosed Building, Exp D, Wind TC DL=5 psf, Kzt = 100

Bottom chord may be square or pitched cut as shown

Valleys short enough to be cut as solid triangular members from a single 2x6, or larger as required, shall be permitted in lieu of fabricating from separate 2x4 members

All plates shown are ITW BCG Wave Plates

Unless specified otherwise on engineer s sealed design, for vertical valley webs taller than 7-9" apply 2x4 "T" reinforcement, 80% length of web, same species and grade or better, attached with 10d box (0128" x 30") nails at 6" oc In lieu of "T" reinforcement, 2x4 Continuous Lateral Restraint applied at mid-length of web is permitted with diagonal bracing as shown in DRWG BRCLBANC0813

Top chord of truss beneath valley set must be braced with properly attached, rated sheathing applied prior to valley truss installation
Or
Purlins at 24" oc or as otherwise specified on engineer's sealed design
Or
By valley trusses used in lieu of purlin spacing as specified on Engineer's sealed design

*** Note that the purlin spacing for bracing the top chord of the truss beneath the valley is measured along the slope of the top chord

++ Larger spans may be built as long as the vertical height does not exceed 14'-0"

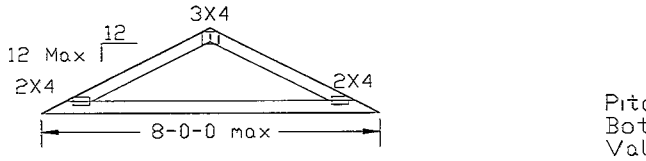

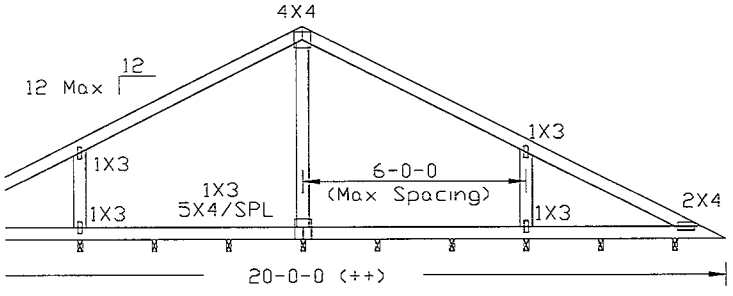

Supporting trusses at 24" oc maximum spacing

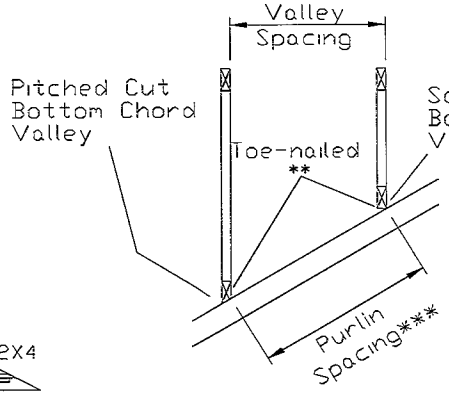

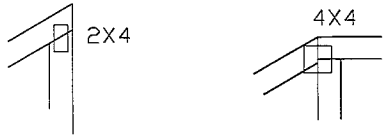

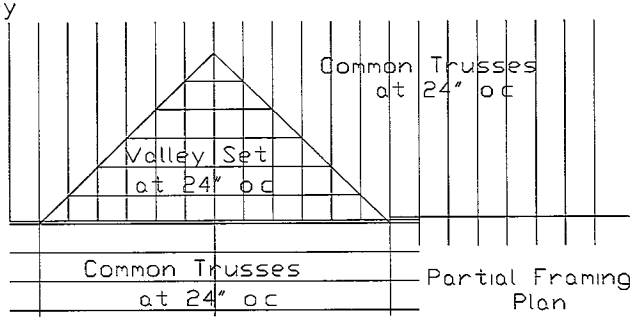

Building Components Group Inc.

Earth City MO 63045

WARNING READ AND FOLLOW ALL NOTES ON THI DRAWIN
**IMPORTAN * FURNISH THIS DRAW NG TO A L CONTRACTORS INCL DING THE INSTALLERS.

Tru e requ e extreme care in fabricating, hand ng shipping nstal ng and brac ng Re e ow he ate edition of BCSI (Bu ding Component Safety Informa o by TPI and SBCA f prac ice prior to performing these functions Installers sha pr v i temporary brac ng not d hal hav o propery attached r gid ceiling Locat on shown for permanent ateral restraint f eb all have bracing instal ed per BCSI sections B3 B7 r B10 a app cable Appy notes to e h a e o truss and pos ton a shown above and on the Joint Deta s unless noted o herwise Re to drawing 160A Z for standard plate positions

ITW Building Component Group Inc shal not be responsible for any devat on from this d wing any fa ure o build the trus n conformance with ANSI/TPI 1 or for handling shipping installa h ucing o tr s es A sea on this drawng or cover page l sting this drawng indicates acc f pr fessio a engineering responsibl ty so ely for the design hown The suitabi ty and use awing for any tr cture is the responsibi ty of the Bui ding De gn r per ANSI/TPI 1 Sec.2 or more nformat on see this job s general notes page and these web s tes ITWBCG www twbca com TPI www tpinst org SBCA www sbcindustry org ICC www iccsafe org

WILLIAM H. KRICK LICENSE No. 70861 STATE OF FLORIDA PROFESSIONAL ENGINEER

06/04/2014

TC LL	30	30	40	PSF
TC DL	20	15	7	PSF
BC DL	10	10	10	PSF
BC LL	0	0	0	PSF
TOT LD	60	55	57	PSF
DUR FAC	125	133	115	115
SPACING			24 0"	

REF	VALLEY DETAI
DATE	04/22/2014
DRWG	VAL160100414

Walks Exxon - Addition

Total Truss Quantity = 42.

Roof Plane Sheathing Area = 1399 sq. ft

Total Plan Area with OHs = 1291 sq.ft

82

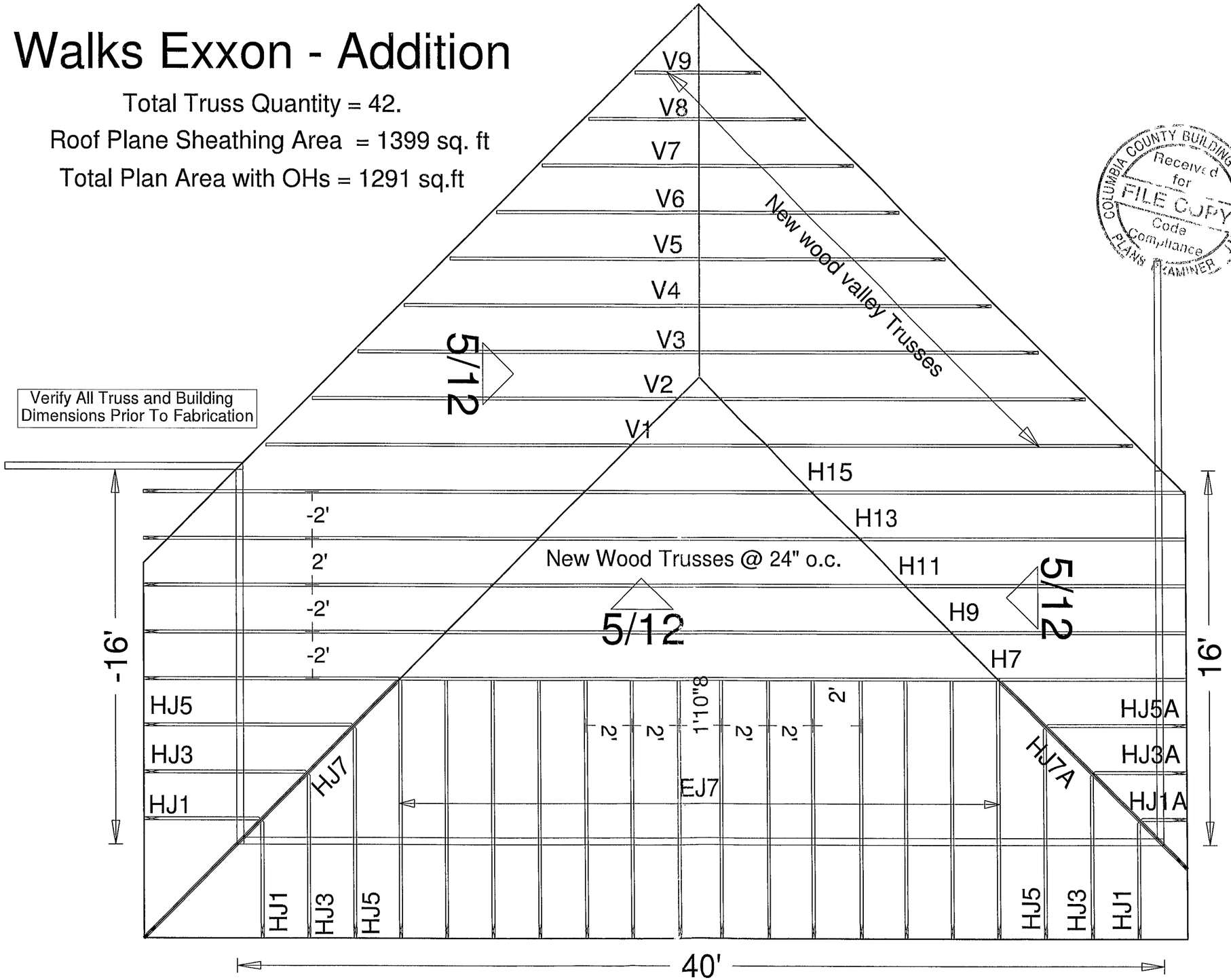

Verify All Truss and Building Dimensions Prior To Fabrication

COLUMBIA COUNTY BUILDING DEPARTMENT
Received for FILE COPY
Code Compliance
PLANS EXAMINER

ANDERSON TRUSS COMPANY
"QUALITY ENGINEERED ACCEPTANCE"

Created : 06-03-2014
: <Not Found>

Customer: O'Neal Roofing
Job Name: Walks Exxon
: 3221 W. Hwy 90
Job Numb: 14-085
Designer: Jon Williams
Salesman: Curt V Burlingame

JOB NO:
14-085

PAGE NO:
1 OF 1