PRINCIPAL Engineering

1011 N Causeway Blvd, Suite 19 ◆Mandeville, Louisiana 70471◆ Phone: 985.624.5001◆ Fax: 985.624.5303

Wednesday, December 14, 2022

Property Owner: David Benton

Property Address: 9764 Co Rd 240, Lake City, FL 32024

RE: Photovoltaic System Roof Installations

I have reviewed the existing structure referenced above to determine the adequacy of the existing structure support the proposed installation of an array of solar panels on the roof.

Based on my review, the existing structure meets or exceeds applicable codes listed below to support the proposed solar panel installation. This assessment is based on recent on-site inspection by solar inspectors and photographs of the existing structure. The photovoltaic system is designed to withstand uplift and downward forces; our assessment is regarding the structure's support of the array. Stresses induced by the introduction of individual mount loads on the rafters or truss top chord are within acceptable limits as shown on the attached calculations. The structural considerations used in our review and assessment include the following:

Evaluation Criteria:

Applied Codes: ASCE 7-16 FBC 2020 NEC 2017
Risk Category: II
Design Wind Speed (3-second gust): 118 mph
Wind Exposure Category: C
Ground Snow Load: 0 PSF
Seismic Design Category: D

Existing Structure:

Roof Material: Shingle
Roof Structure: 2x6 Truss Top Chord
Roof Slope: 3/12

HENRY I. DIFRANCO, JR.
LICENSE
No. 71950
STATE OF
FLORIDA
PROFESSIONAL ENGINEER

This item has been digitally signed and sealed by Henry I. DiFranco, Jr., P.E. on **December 14, 2022** Printed copies of this document are not considered signed and sealed and the signature must be verified on any electronic copies.

PRINCIPAL ENGINEERING, INC.
1011 N. CAUSEWAY BLVD. STE 19
MANDEVILLE, LA 70471
985.624.5001
INFO@PI-AEC.COM
FLORIDA FIRM NO. 30649

Effect of the Solar Array on Structure Loading:

Gravity Load:

Per IBC Section 1607, the areas of the roof where solar panels are located are considered inaccessible, and therefore not subject to roof live loading. Live load in these areas is replaced by the dead load of the solar array, 3 psf. The total gravity load on the structure is therefore reduced and the structure may remain unaltered. Connections of the mounts to the underlying structure are to be installed in a staggered pattern, except at the array ends, to distribute the loading evenly to the roof structure. The stresses within the rafters or truss top chord due to the introduction of discrete mount loads are within acceptable limits, as shown on the attached calculations.

Wind Load:

The solar panel array will be flush mounted (no more than 6" above the surrounding roof surface, and parallel to the roof surface. Any additional wind loading on the structure due to the presence of the array is negligible. The array structure is designed by the manufacturer to withstand uplift and downward forces resulting from wind and snow loads. The attached calculations verify the capacity of the connection of the solar array to the roof to resist uplift due to wind loads, the governing load case.

Snow Load:

The reduced friction of the glass surface of the solar panels allows for the lower slope factor (Cs) per Section 7.4 of ASCE 7.16 resulting in a reduced design snow load for the structure. This analysis conservatively considered the snow load to be unchanged.

Seismic Load:

Analysis shows that additional seismic loads due to the array installation will be small. Even conservatively neglecting the wall materials, the solar panel installation represents an increase in the total weight of the roof and corresponding seismic load of less than 10%. This magnitude of additional forces meets the requirements of the exception in Section 11B.4 of ASCE 7-16. The existing lateral force resisting system of the structure is therefore allowed to remain unaltered.

This item has been digitally signed and sealed by Henry I. DiFranco, Jr., P.E. on **December 14, 2022** Printed copies of this document are not considered signed and sealed and the signature must be verified on any electronic copies.

PRINCIPAL ENGINEERING, INC.
1011 N. CAUSEWAY BLVD. STE 19
MANDEVILLE, LA 70471
985.624.5001
INFO@PI-AEC.COM
FLORIDA FIRM NO. 30649

Conclusion:

To the best of my professional knowledge and belief, the subject construction and photovoltaic system installation will be in compliance with all state and local building codes and guidelines in effect at the time of our review.

Limitations:

Engineer's assessment of the existing structure is based on recent field reports and current photographs of the elements of the structure that were readily accessible at the time of inspection. The design of the solar panel racking (mounts, rails, connectors, etc.), connections between the racking and panels, and electrical construction related to the installation are the responsibility of others. The photovoltaic system installation must be by competent personnel in accordance with manufacturer recommendations and specifications and should meet or exceed industry standards for quality. The contractor is responsible for ensuring that the solar array is installed according to the approved plans and must notify the engineer of any undocumented damage or deterioration of the structure, or of discrepancies between the conditions depicted in the approved plans and those discovered on site so that the project may be reevaluated and altered as required. Engineer does not assume any responsibility for improper installation of the proposed photovoltaic system.

This item has been digitally signed and sealed by Henry I. DiFranco, Jr., P.E. on **December 14, 2022** Printed copies of this document are not considered signed and sealed and the signature must be verified on any electronic copies.

PRINCIPAL ENGINEERING, INC.
1011 N. CAUSEWAY BLVD. STE 19
MANDEVILLE, LA 70471
985.624.5001
INFO@PI-AEC.COM
FLORIDA FIRM NO. 30649

Uplift and Wind Downforce Calculation Summary (ASCE 7-16)
Mount, Rack, & Panel Proportioning
Point Load Check and Rafter Stress Analysis

		Max. Individual Panel Dimensions		
Property Owner:	David Benton			
Project Address:	9764 Co Rd 240	Length (in)	Width (in)	Area (sf)
City, State:	Lake City, FL 32024	57.6	41.1	16.44

Building Characteristics, Design Input, and Adjustment Factors				
Roof Dimensions:	Length:	90	Greater Dimension	90
	Width:	70	Least Dimension:	70
Roof Height (h):		15	Fig 30.4-1, valid under 60'	✓
Pitch: 3 on 12 =		14.0°	Must be less than 45°	✓
Roof Configuration		Gable		
Roof Structure		2x6 Truss Top Chord		
Roof Material		Plywood		
Risk Category:		II		
Basic Wind Speed:		118	From 26.5-1	
Exposure Category:		C	Fig. 26.7	
Topographic Factor (K_{zt})		1.21	Fig. 26.8-1	
Wind Pressure @ h=30, p_{net30}		See Table Below	Fig. 30.4-1	
Ht. & Exposure Adjustment (λ)		1.21	Fig. 30.4-1	
Adjusted Wind Pressures, p_{net}		See Table Below	Eq. 30.4-1	
Effective Wind Area (sf):		8.22	(Area per individual mount)	

Roof Zone Strip (a), in ft, Fig. 30.4-1, Note 5	
1 - Least Roof Horizontal Dimension (L or W) x 0.10	7
2 - Roof Height x 0.4	6
3 - Least Roof Horizontal Dimension (L or W) x 0.04	2.8
4 - Least of (1) and (2)	6
5 - Greater of (3) and (4)	6
6 - Greater of (5) and 3 feet **a=**	6

This item has been digitally signed and sealed by Henry I. DiFranco, Jr., P.E. on **December 14, 2022** Printed copies of this document are not considered signed and sealed and the signature must be verified on any electronic copies.

PRINCIPAL ENGINEERING, INC.
1011 N. CAUSEWAY BLVD. STE 19
MANDEVILLE, LA 70471
985.624.5001
INFO@PI-AEC.COM
FLORIDA FIRM NO. 30649

Net Design Pressures, p_{net} (Fig 30.4-1), Components & Cladding					
	Uplift (-psf)			Factored Pressure (0.6W, ASCE 7-16)	θ
		P_{30net}	$lK_{zt}P_{30net}$		
gable /hip /flat					
Gable	Zone 1 & 2e	44.7	65.4	39.2	$7° < \theta \leq 20°$
	Zone 2n,2r,3e	65.2	95.5	57.3	
	Zone 3r	77.5	113.4	68.1	
Hip					

This item has been digitally signed and sealed by Henry I. DiFranco, Jr., P.E. on **December 14, 2022** Printed copies of this document are not considered signed and sealed and the signature must be verified on any electronic copies.

PRINCIPAL ENGINEERING, INC.
1011 N. CAUSEWAY BLVD. STE 19
MANDEVILLE, LA 70471
985.624.5001
INFO@PI-AEC.COM
FLORIDA FIRM NO. 30649

Snow Load		
Ground Snow Load, p_g	0.0	From ASCE 7 or AHJ
Terrain Category:	C	Para 6.5.6.3
Exposure	Fully	
Exposure FactorCe	0.9	Table 7-2
Thermal Factor, Ct	1.2	Table 7-3
Importance Factor, I_s	1.0	Table 1.5.2
Roof Configuration	Gable	
Roof Slope	14.0°	
Distance from Eave to Ridge	35.0	
p_m, Minimum required Snow Load	0.00 psf	Para. 7.3.4
pf, Calculated Snow Load	0.00	Eq. 7.3-1
pf, Design Snow Load	0.00 psf	

Rail & Mount Selection		
Manufacturer:	Unirac	Allowable Mount Spacing by Uplift Pressure
Model:	Flashloc Comp Kit	< 50 psf : 2 rails, mounts @ 4 ft. o.c.
Substrate	Wood Rafters/Truss Top Chord	50 to 75 psf : 2 rails, mounts @ 2 ft. o.c.
Connector:	5/16" x 4" Lag Screw	75 to 100 psf : 3 rails, mounts @ 4 ft. o.c.
		100 to 150 psf : 3 rails, mounts @ 2 ft. o.c.
Allowable Uplift:	480 lb., max.	150 to 200 psf : 4 rails, mounts @ 2 ft. o.c.
		> 200 psf : Mount capacity exceeded

Rail & Mount Layout by Zone			
Zone 1:	2 rails, mounts @ 4 ft. o.c.	Zone 2r:	2 rails, mounts @ 2 ft. o.c.
Zone 1':	N/A	Zone 3:	N/A
Zone 2:	N/A	Zone 3e:	2 rails, mounts @ 2 ft. o.c.
Zone 2e:	2 rails, mounts @ 4 ft. o.c.	Zone 3r:	2 rails, mounts @ 2 ft. o.c.
Zone 2n:	2 rails, mounts @ 2 ft. o.c.		

(From rail analysis, allowable spacing and number of rails are controlled by individual mount pullout before rail bending)

This item has been digitally signed and sealed by Henry I. DiFranco, Jr., P.E. on **December 14, 2022** Printed copies of this document are not considered signed and sealed and the signature must be verified on any electronic copies.

PRINCIPAL ENGINEERING, INC.
1011 N. CAUSEWAY BLVD. STE 19
MANDEVILLE, LA 70471
985.624.5001
INFO@PI-AEC.COM
FLORIDA FIRM NO. 30649

NEW PHOTOVOLTAIC SYSTEM 12.64 KW DC
9764 CO RD 240, LAKE CITY, FL 32024

PRINCIPAL Engineering

SDVOSB

GENERAL NOTES

1.1.1 PROJECT NOTES:
1.1.2 THIS PHOTOVOLTAIC (PV) SYSTEM SHALL COMPLY WITH THE NATIONAL ELECTRIC CODE (NEC) ARTICLE 690, ALL MANUFACTURERS'S LISTING AND INSTALLATION INSTRUCTIONS, AND THE RELEVANT CODES AS SPECIFIED BY THE AUTHORITY HAVING JURISDICTION'S (AHJ) APPLICABLE CODES.
1.1.3 THE UTILITY INTERCONNECTION APPLICATION MUST BE APPROVED AND PV SYSTEM INSPECTED PRIOR TO PARALLEL OPERATION
1.1.4 GROUND FAULT DETECTION AND INTERRUPTION (GFDI) DEVICE IS INTEGRATED WITH THE MICRO-INVERTER IN ACCORDANCE WITH NEC 690.41(B)
1.1.5 ALL PV SYSTEM COMPONENTS; MODULES, UTILITY-INTERACTIVE INVERTERS, AND SOURCE CIRCUIT COMBINER BOXES ARE IDENTIFIED AND LISTED FOR USE IN PHOTOVOLTAIC SYSTEMS AS REQUIRED BY NEC 690.4: PV MODULES: UL1703, IEC61730, AND IEC61215, AND NFPA 70 CLASS C FIRE INVERTERS: UL 1741 CERTIFIED, IEEE 1547, 929, 519 COMBINER BOX(ES): UL 1703 OR UL 1741 ACCESSORY
1.1.6 MAX DC VOLTAGE CALCULATED USING MANUFACTURER PROVIDED TEMP COEFFICIENT FOR VOC. IF UNAVAILABLE, MAX DC VOLTAGE CALCULATED ACCORDING TO NEC 690.7.
1.1.7 ALL INVERTERS, PHOTOVOLTAIC MODULES,PHOTOVOLTAIC PANELS, AND SOURCE CIRCUIT COMBINERS INTENDED FOR USE IN A PHOTOVOLTAIC POWER SYSTEM WILL BE IDENTIFIED AND LISTED FOR THE APPLICATION PER 690.4. SHALL BE INSTALLED ACCORDING TO ANY INSTRUCTIONS FROM LISTING OR LABELING [NEC 110.3].
1.1.8 ALL SIGNAGE TO BE PLACED IN ACCORDANCE WITH LOCAL BUILDING CODE. IF EXPOSED TO SUNLIGHT, IT SHALL BE UV RESISTANT. ALL PLAQUES AND SIGNAGE WILL BE INSTALLED AS REQUIRED BY THE NEC AND AHJ.

1.2.1 SCOPE OF WORK:
1.2.2 PRIME CONTRACTOR IS RESPONSIBLE FOR THE DESIGN AND SPECIFICATIONS OF THE GRID-TIED PHOTOVOLTAIC SYSTEM RETROFIT. PRIME CONTRACTOR WILL BE RESPONSIBLE FOR COLLECTING EXISTING ONSITE REQUIREMENTS TO DESIGN, SPECIFY, AND INSTALL THE EXTERIOR ROOF-MOUNTED PORTION OF THE PHOTOVOLTAIC SYSTEMS DETAILED IN THIS DOCUMENT

1.3.1 WORK INCLUDES:
1.3.2 PV RACKING SYSTEM INSTALLATION - UNIRAC SOLAR
1.3.3 PV MODULE AND INVERTER INSTALLATION - CANADIAN SOLAR INC. CS3N-395MS / ENPHASE IQ8PLUS-72-2-US INVERTER
1.3.4 PV EQUIPMENT ROOF MOUNT
1.3.5 PV SYSTEM WIRING TO A ROOF-MOUNTED JUNCTION BOX
1.3.6 PV LOAD CENTERS (IF INCLUDED)
1.3.7 PV METERING/MONITORING (IF INCLUDED)
1.3.8 PV DISCONNECTS
1.3.9 PV GROUNDING ELECTRODE & BONDING TO (E) GEC
1.3.10 PV FINAL COMMISSIONING
1.3.11 (E) ELECTRICAL EQUIPMENT RETROFIT FOR PV
1.3.12 SIGNAGE PLACED IN ACCORDANCE WITH LOCAL BUILDING CODE

PROJECT INFORMATION

OWNER
NAME: DAVID BENTON

CONTRACTOR NAME
ADT SOLAR LLC
PHONE: 5052180838

SCOPE OF WORK
SYSTEM SIZE: STC:32 X 395W= 12.64 kW DC
PTC: 32 x 372.5W = 11.92 kW DC
(32) CANADIAN SOLAR INC. CS3N-395MS
(32) ENPHASE IQ8PLUS-72-2-US

ATTACHMENT TYPE: ROOF MOUNT
MSP UPGRADE: NO
UTILITY METER UPGRADE: NO

AUTHORITIES HAVING JURISDICTION
BUILDING: COLUMBIA COUNTY (FL)
ZONING: COLUMBIA COUNTY (FL)
UTILITY: CLAY ELECTRIC COOPERATIVE, INC (FL)
METER NO: 154 737 394

DESIGN SPECIFICATION
OCCUPANCY: II
CONSTRUCTION: SINGLE-FAMILY
ZONING: RESIDENTIAL
GROUND SNOW LOAD: REFER STRUCTURAL LETTER
WIND EXPOSURE: REFER STRUCTURAL LETTER
WIND SPEED: 118 MPH

APPLICABLE CODES & STANDARDS
BUILDING: IBC 2018, IRC 2018, FBC 2020 (7TH EDITION)
ELECTRICAL: NEC 2017
FIRE: IFC 2020

VICINITY MAP

SATELLITE VIEW

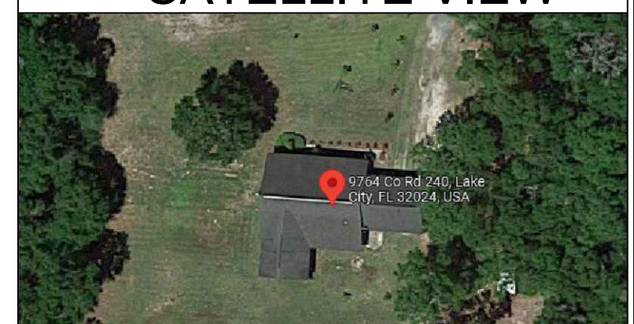

SHEET INDEX

G-001	COVER PAGE
G-002	NOTES
A-101	SITE PLAN
A-102	ELECTRICAL PLAN
A-103	ATTACHMENT PLAN
A-104	STRUCTURAL PLAN
E-601	LINE DIAGRAM
E-602	ELECTRICAL CALCULATIONS
E-603	PLACARD
R-001	RESOURCE DOCUMENT
R-002	RESOURCE DOCUMENT
R-003	RESOURCE DOCUMENT
R-004	RESOURCE DOCUMENT
R-005	RESOURCE DOCUMENT
R-006	RESOURCE DOCUMENT
R-007	RESOURCE DOCUMENT
R-008	RESOURCE DOCUMENT

CONTRACTOR

ADT Solar

22171 MCH RD
MANDEVILLE, LA 70471
PHONE: 9152011490

PROJECT NAME & ADDRESS
DAVID BENTON

9764 CO RD 240,LAKE CITY, FL 32024

COUNTY:-COLUMBIA COUNTY

SYSTEM SIZE
DC SIZE: 12.640 KW DC-(STC)
AC SIZE: 9.280 KW AC

HENRY I. DIFRANCO, JR. LICENSE No. 71950 STATE OF FLORIDA PROFESSIONAL ENGINEER

This item has been digitally signed and sealed by Henry I. DiFranco, Jr., P.E. on December 14, 2022 Printed copies of this document are not considered signed and sealed and the signature must be verified on any electronic copies.

PRINCIPAL ENGINEERING, INC.
1011 N. CAUSEWAY BLVD. STE 19
MANDEVILLE, LA 70471
985.624.5001
INFO@PI-AEC.COM
FLORIDA FIRM NO. 30649

SHEET TITLE
COVER PAGE

DRAWN DATE	12/13/2022
DRAWN BY	BVP

SHEET NUMBER
G-001

2.1.1 SITE NOTES:

2.1.2 A LADDER WILL BE IN PLACE FOR INSPECTION IN COMPLIANCE WITH OSHA REGULATIONS.
2.1.3 THE PV MODULESARECONSIDERED NON-COMBUSTIBLE AND THIS SYSTEM IS A UTILITY INTERACTIVE SYSTEM WITH NO STORAGE BATTERIES.
2.1.4 THE SOLAR PV INSTALLATION WILL NOT OBSTRUCT ANY PLUMBING, MECHANICAL, OR BUILDING ROOF VENTS.
2.1.5 PROPERACCESS AND WORKING CLEARANCE AROUND EXISTING AND PROPOSED ELECTRICAL EQUIPMENT WILL BE PROVIDED AS PERSECTION NEC 110.26.
2.1.6 ROOF COVERINGS SHALL BE DESIGNED, INSTALLED, AND MAINTAINED IN ACCORDANCE WITH THIS CODE AND THE APPROVED MANUFACTURER'S INSTRUCTIONS SUCH THAT THE ROOF COVERING SERVES TO PROTECT THE BUILDING OR STRUCTURE.
2.2.1 EQUIPMENT LOCATIONS:

2.2.2 ALL EQUIPMENT SHALL MEET MINIMUM SETBACKS AS REQUIRED BY NEC 110.26.
2.2.3 WIRING SYSTEMS INSTALLED IN DIRECT SUNLIGHT MUST BE RATED FOR EXPECTED OPERATING TEMPERATURE AS SPECIFIED BY NEC 690.31 (A),(C) AND NEC TABLES 310.15 (B)(2)(A) AND 310.15 (B)(3)(C).
2.2.4 JUNCTION AND PULL BOXES PERMITTED INSTALLED UNDER PV MODULES ACCORDING TO NEC 690.34.
2.2.5 ADDITIONAL AC DISCONNECT(S) SHALL BE PROVIDED WHERE THE INVERTER IS NOT WITHIN SIGHT OF THE AC SERVICING DISCONNECT.
2.2.6 ALL EQUIPMENT SHALL BE INSTALLED ACCESSIBLE TO QUALIFIED PERSONNEL ACCORDING TO NEC APPLICABLE CODES.
2.2.7 ALL COMPONENTS ARE LISTED FOR THEIR PURPOSE AND RATED FOR OUTDOOR USAGE WHEN APPROPRIATE.

2.3.1 STRUCTURAL NOTES:

2.3.2 RACKING SYSTEM & PV ARRAY WILL BE INSTALLED ACCORDING TO CODE-COMPLIANT INSTALLATION MANUAL. TOP CLAMPS REQUIRE A DESIGNATED SPACE BETWEEN MODULES, AND RAILS MUSTALSO EXTEND A MINIMUM DISTANCE BEYOND EITHER EDGE OF THE ARRAY/SUBARRAY, ACCORDING TO RAI MANUFACTURER'S INSTRUCTIONS.
2.3.3 JUNCTION BOX WILL BE INSTALLED PER MANUFACTURERS' SPECIFICATIONS. IF ROOF-PENETRATING TYPE, IT SHALL BE FLASHED & SEALED PER LOCAL REQUIREMENTS.
2.3.4 ROOFTOP PENETRATIONS FOR PV RACEWAY WILLBE COMPLETED AND SEALED W/ APPROVED CHEMICAL SEALANT PER CODE BY A LICENSED CONTRACTOR.
2.3.5 ALL PV RELATED ROOF ATTACHMENTS TO BE SPACED NO GREATER THAN THE SPAN DISTANCE SPECIFIED BY THE RACKING MANUFACTURER.
2.3.6 WHEN POSSIBLE, ALL PV RELATED RACKING ATTACHMENTS WILL BE STAGGERED AMONGST THE ROOF FRAMING MEMBERS.

2.4.1 WIRING & CONDUIT NOTES:

2.4.2 ALL CONDUIT AND WIRE WILL BE LISTED AND APPROVED FOR THEIR PURPOSE. CONDUIT AND WIRE SPECIFICATIONS AREBASED ON MINIMUM CODE REQUIREMENTS AND ARE NOT MEANT TO LIMIT UP-SIZING.
2.4.3 CONDUCTORS SIZED ACCORDING TO NEC 690.8, NEC 690.7.
2.4.4 VOLTAGE DROP LIMITED TO 1.5%.
2.4.5 DC WIRING LIMITED TO MODULE FOOTPRINT. MICROINVERTER WIRING SYSTEMS SHALL BE LOCATED AND SECURED UNDER THE ARRAY W/ SUITABLE WIRING CLIPS.
2.4.6 AC CONDUCTORS COLORED OR MARKED AS FOLLOWS: PHASE A OR L1- BLACK PHASE B OR L2- RED, OR OTHER CONVENTION IF THREE PHASE PHASE C OR L3- BLUE, YELLOW, ORANGE**, OR OTHER CONVENTION NEUTRAL- WHITE OR GREY IN 4-WIRE DELTA CONNECTED SYSTEMS THE PHASE WITH HIGHER VOLTAGE TO BE MARKED ORANGE [NEC 110.15].

2.5.1 GROUNDING NOTES:

2.5.2 GROUNDING SYSTEM COMPONENTS SHALL BE LISTED FOR THEIR PURPOSE, AND GROUNDING DEVISES EXPOSED TO THE ELEMENTS SHALL BE RATED FOR SUCH USE.
2.5.3 PV EQUIPMENT SHALL BE GROUNDED ACCORDING TO NEC 690.43 AND MINIMUM NEC TABLE 250.122.
2.5.4 METAL PARTS OF MODULE FRAMES, MODULE RACKING, AND ENCLOSURES CONSIDERED GROUNDED IN ACCORD WITH 250.134 AND 250.136(A).
2.5.5 EQUIPMENT GROUNDING CONDUCTORS SHALLBE SIZED ACCORDING TO NEC 690.45 AND MICROINVERTER MANUFACTORERS' INSTRUCTIONS.
2.5.6 EACH MODULE WILL BE GROUNDED USING WEEB GROUNDING CLIPS AS SHOWN IN MANUFACTURERDOCUMENTATION AND APPROVED BY THE AHJ. IF WEEBS ARE NOT USED, MODULE GROUNDING LUGS MUST BE INSTALLED AT THE SPECIFIED GROUNDING LUG HOLES PER THE MANUFACTURERS' INSTALLATION REQUIREMENTS.
2.5.7 THE GROUNDING CONNECTION TO A MODULE SHALL BE ARRANGED SUCH THAT THE REMOVAL OFA MODULE DOES NOT INTERRUPT A GROUNDING CONDUCTOR TO ANOTHER MODULE.
2.5.8 GROUNDING AND BONDING CONDUCTORS, IF INSULATED, SHALL BE COLORED GREEN OR MARKED GREEN IF #4 AWG OR LARGER [NEC 250.119]
2.5.9 THE GROUNDING ELECTRODE SYSTEM COMPLIES WITH NEC 690.47 AND NEC 250.50 THROUGH 250.106. IF EXISTING SYSTEM IS INACCESSIBLE, OR INADEQUATE, A GROUNDING ELECTRODE SYSTEM PROVIDED ACCORDING TO NEC 250, NEC 690.47 AND AHJ.
2.5.10 GROUND-FAULT DETECTION SHALL COMPLY WITH NEC 690.41(B)(1) AND (2) TO REDUCE FIRE HAZARDS

2.6.1 DISCONNECTION AND OVER-CURRENT PROTECTION NOTES:
2.6.2 DISCONNECTING SWITCHES SHALL BE WIRED SUCH THAT WHENTHE SWITCH IS OPENED THE CONDUCTORS REMAINING ENERGIZED ARECONNECTED TO THE TERMINALS MARKED "LINE SIDE" (TYPICALLY THE UPPER TERMINALS).
2.6.3 DISCONNECTS TO BE ACCESSIBLE TO QUALIFIED UTILITY PERSONNEL, BE LOCKABLE, AND BE A VISIBLE-BREAK SWITCH
2.6.4 PV SYSTEM CIRCUITS INSTALLED ON OR IN BUILDINGS SHALL INCLUDE A RAPID SHUTDOWN FUNCTION TO REDUCE SHOCK HAZARD FOR EMERGENCY RESPONDERS IN ACCORDANCE WITH 690.12(A) THROUGH (D).
2.6.5 ALL OCPD RATINGS AND TYPES SPECIFIED ACCORDING TO NEC 690.8, 690.9, AND 240.
2.6.6 MICROINVERTER BRANCHES CONNECTED TO A SINGLE BREAKER OR GROUPED FUSES IN ACCORDANCE WITH NEC 110.3(B).
2.6.7 IF REQUIRED BY AHJ, SYSTEM WILL INCLUDE ARC-FAULT CIRCUIT PROTECTION ACCORDING TO NEC 690.11 AND UL1699B.

2.7.1 INTERCONNECTION NOTES:

2.7.2 LOAD-SIDE INTERCONNECTION SHALL BE IN ACCORDANCE WITH [NEC 705.12 (B)]
2.7.3 THE SUM OF THE UTILITY OCPD AND INVERTER CONTINUOUS OUTPUT MAY NOT EXCEED 120% OF BUSBAR RATING [NEC 705.12(B)(2)(3)(b)].
2.7.4 THE SUM OF 125 PERCENT OF THE POWER SOURCE(S) OUTPUT CIRCUIT CURRENT AND THE RATING OF THE OVERCURRENT DEVICE PROTECTING THE BUSBAR SHALL NOT EXCEED 120 PERCENT OF THE AMPACITY OF THE BUSBAR, PV DEDICATED BACKFEED BREAKERS MUST BE LOCATED OPPOSITE END OF THE BUS FROM THE UTILITY SOURCE OCPD [NEC 705.12(B)(2)(3)].
2.7.5 AT MULTIPLE ELECTRIC POWER SOURCES OUTPUT COMBINER PANEL, TOTAL RATING OF ALL OVERCURRENT DEVICES SHALL NOT EXCEED AMPACITY OF BUSBAR. HOWEVER, THE COMBINED OVERCURRENT DEVICE MAY BE EXCLUDED ACCORDING TO NEC 705.12 (B)(2)(3)(C).
2.7.6 FEEDER TAP INTERCONECTION (LOADSIDE) ACCORDING TO NEC 705.12 (B)(2)(1)
2.7.7 SUPPLY SIDE TAP INTERCONNECTION ACCORDING TO NEC 705.12 (A) WITH SERVICE ENTRANCE CONDUCTORS IN ACCORDANCE WITH NEC 230.42
2.7.8BACKFEEDING BREAKER FOR ELECTRIC POWER SOURCES OUTPUT IS EXEMPT FROM ADDITIONAL FASTENING [NEC 705.12 (B)(5)].

CONTRACTOR

ADT Solar

22171 MCH RD
MANDEVILLE, LA 70471

PHONE: 9152011490

PROJECT NAME & ADDRESS

DAVID BENTON

9764 CO RD 240,LAKE CITY,
FL 32024

COUNTY:-COLUMBIA COUNTY

SYSTEM SIZE
DC SIZE: 12.640 KW DC-(STC)
AC SIZE: 9.280 KW AC

This item has been digitally signed and sealed by Henry I. DiFranco, Jr., P.E. on December 14, 2022 Printed copies of this document are not considered signed and sealed and the signature must be verified on any electronic copies.

PRINCIPAL ENGINEERING, INC.
1011 N. CAUSEWAY BLVD. STE 19
MANDEVILLE, LA 70471
985.624.5001
INFO@PI-AEC.COM
FLORIDA FIRM NO. 30649

SHEET TITLE

NOTES

DRAWN DATE	12/13/2022
DRAWN BY	BVP

SHEET NUMBER

G-002

(32) CANADIAN SOLAR INC. CS3N-395MS
(32) ENPHASE IQ8PLUS-72-2-US

ADDRESS : 9764 CO RD 240
CITY ZIP : LAKE CITY, FL 32024

METER NO: 154 737 394

DC SIZE 32 X 395W = 12.640 kW DC-STC
AC SIZE 32X 290W = 9.280 kW AC

TOTAL ROOF SQUARE FOOTAGE IS: 4495.19 FT²
TOTAL ARRAY SQUARE FOOTAGE IS: 697.60 FT²
% COVERED BY SOLAR IS: 15.52%

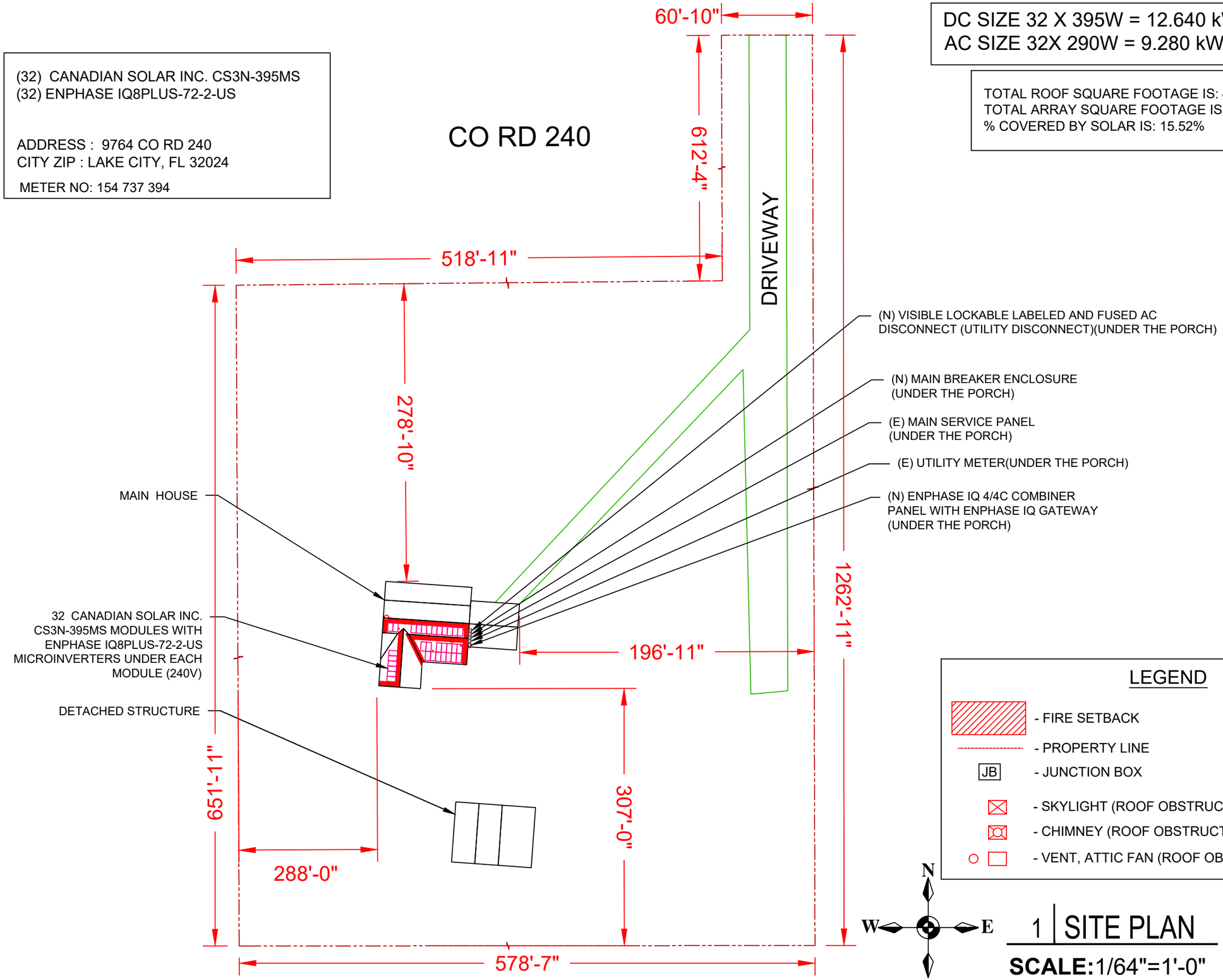

LEGEND

- FIRE SETBACK
- PROPERTY LINE
- JB - JUNCTION BOX
- SKYLIGHT (ROOF OBSTRUCTION)
- CHIMNEY (ROOF OBSTRUCTION)
- VENT, ATTIC FAN (ROOF OBSTRUCTION)

1 SITE PLAN

SCALE:1/64"=1'-0"

CONTRACTOR

ADT Solar

22171 MCH RD
MANDEVILLE, LA 70471

PHONE: 9152011490

PROJECT NAME & ADDRESS

DAVID BENTON

9764 CO RD 240,LAKE CITY, FL 32024

COUNTY:-COLUMBIA COUNTY

SYSTEM SIZE

DC SIZE: 12.640 KW DC-(STC)
AC SIZE: 9.280 KW AC

HENRY I. DIFRANCO, JR. LICENSE No. 71950 STATE OF FLORIDA PROFESSIONAL ENGINEER

This item has been digitally signed and sealed by Henry I. DiFranco, Jr., P.E. on **December 14, 2022** Printed copies of this document are not considered signed and sealed and the signature must be verified on any electronic copies.

PRINCIPAL ENGINEERING, INC.
1011 N. CAUSEWAY BLVD. STE 19
MANDEVILLE, LA 70471
985.624.5001
INFO@PI-AEC.COM
FLORIDA FIRM NO. 30649

SHEET TITLE

SITE PLAN

DRAWN DATE	12/13/2022
DRAWN BY	BVP

SHEET NUMBER

A-101

ROOF SECTION(S)

ROOF 1	TILT - 16° AZIMUTH - 184° MODULE - 14 SYSTEM SIZE (KW)- 5.53
ROOF 2	TILT - 26° AZIMUTH - 184° MODULE - 12 SYSTEM SIZE (KW)- 4.74
ROOF 3	TILT - 27° AZIMUTH - 274° MODULE - 06 SYSTEM SIZE (KW)- 2.37

1 - MODULE STRING

2 - MODULE STRING

3 - MODULE STRING

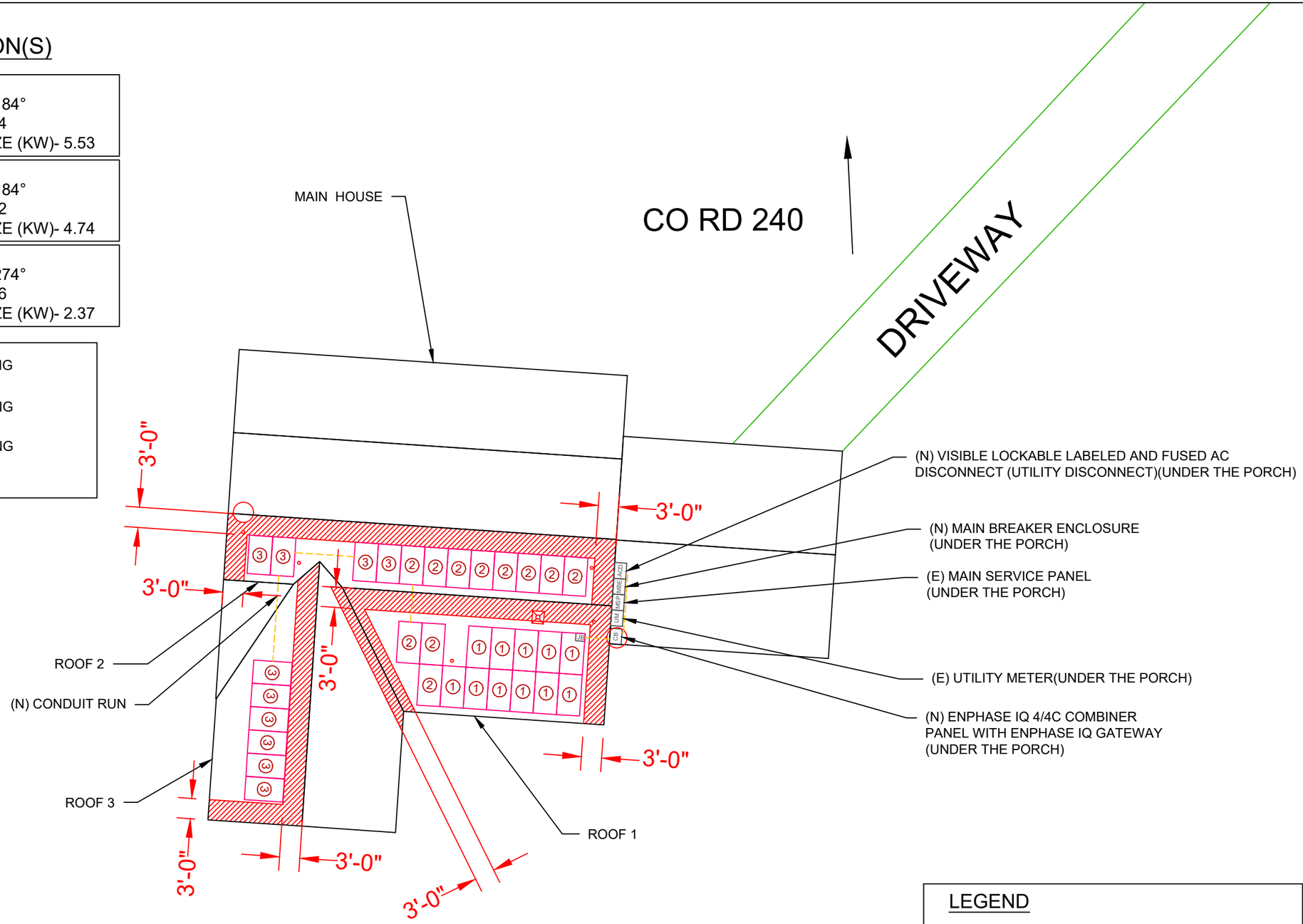

LEGEND

- FIRE SETBACK
- PROPERTY LINE
- JUNCTION BOX
- SKYLIGHT (ROOF OBSTRUCTION)
- CHIMNEY (ROOF OBSTRUCTION)
- VENT, ATTIC FAN (ROOF OBSTRUCTION)

N W E S

1 ELECTRICAL PLAN

SCALE:1/16" = 1'-0"

CONTRACTOR

ADT Solar

22171 MCH RD
MANDEVILLE, LA 70471
PHONE: 9152011490

PROJECT NAME & ADDRESS

DAVID BENTON

9764 CO RD 240,LAKE CITY, FL 32024

COUNTY:-COLUMBIA COUNTY

SYSTEM SIZE

DC SIZE: 12.640 KW DC-(STC)
AC SIZE: 9.280 KW AC

NESTOR J. HOUGHTON LICENSE No. 64501 STATE OF FLORIDA PROFESSIONAL ENGINEER

This item has been digitally signed and sealed by Nestor J. Houghton, P.E. on **December 14, 2022** Printed copies of this document are not considered signed and sealed and the signature must be verified on any electronic copies.

PRINCIPAL ENGINEERING, INC.
1011 N. CAUSEWAY BLVD. STE 19
MANDEVILLE, LA 70471
985.624.5001
INFO@PI-AEC.COM
FLORIDA FIRM NO. 30649

SHEET TITLE

ELECTRICAL PLAN

DRAWN DATE	12/13/2022
DRAWN BY	BVP

SHEET NUMBER

A-102

WIND ZONE CALCULATIONS =

OFFSET
DISTANCE = a = 0.4 X h = (0.4 x 15') = 6'
OR = a = 0.1 X L = (0.1 x 70') = 6'

LEGEND

- WIND ZONE 1 (TYP)
- WIND ZONE 2e (TYP)
- WIND ZONE 2n (TYP)
- WIND ZONE 2r (TYP)
- WIND ZONE 3r (TYP)
- WIND ZONE 3e (TYP)

- CLAMP
- UNIRAC FLASHLOC
- RAIL
- RAFTER

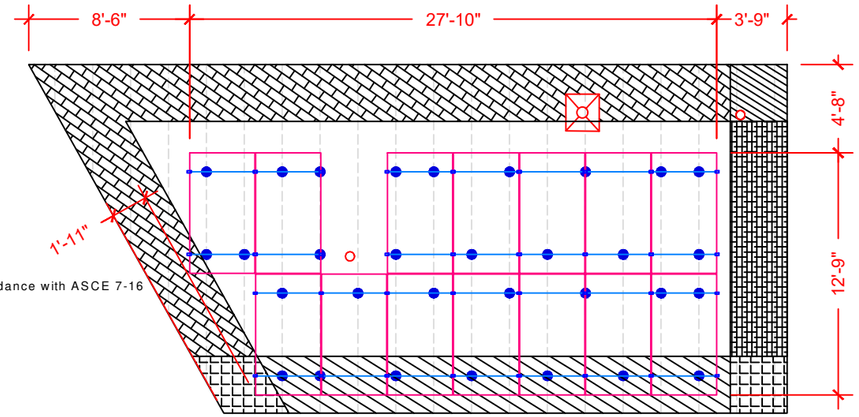

ARRAY 1
TILT- 16 DEG
AZIMUTH - 184 DEG

Note 1: Windspeed value is design 3-sec gust in accordance with ASCE 7-16

Note 2: a)Lag bolt shall be mounted into rafters
b)Notify Engineer immediately if conditions differ or prevent installation per plan.

Note 3: These drawings were prepared under my supervison. I have researched the code and to the best of my knowledge And belief, these drawings comply with the 2020 Florida Building Code.

Note 4: Installer shall adjust mount spacing by zone to match prescribed values on engineer's calculation letter

Note 5: Maximum rail cantilever distance beyond outermost mount is One-third the zone-specific mount spacing.

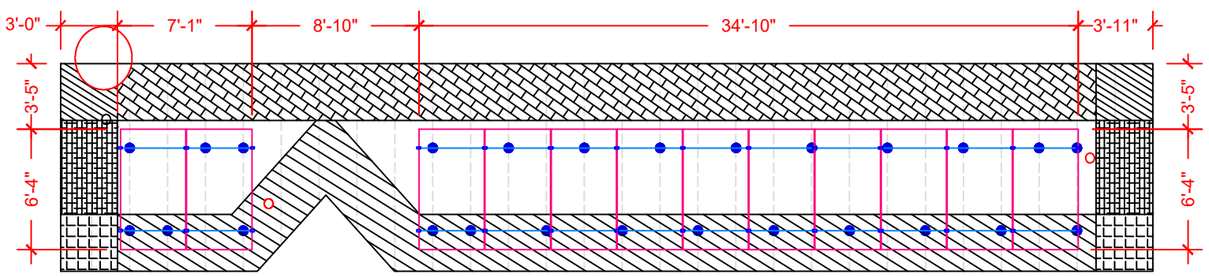

ARRAY 2
TILT- 26 DEG
AZIMUTH - 184 DEG

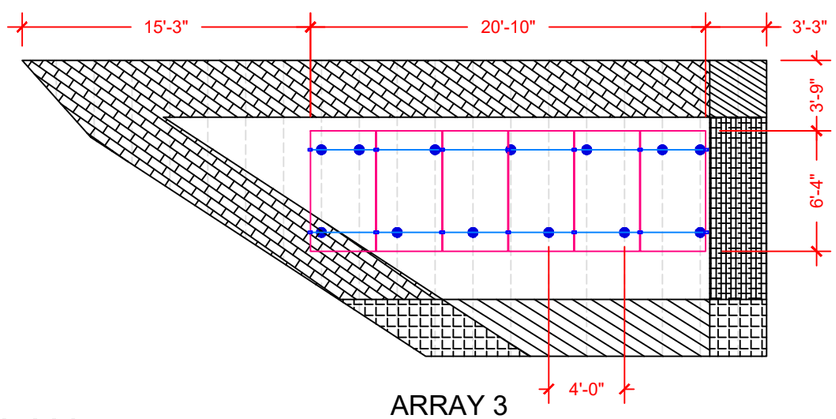

ARRAY 3
TILT- 27 DEG
AZIMUTH - 274 DEG

1 | ATTACHMENT PLAN

SCALE:1/8"=1'-0"

BOM

ITEM	NEEDED
CANADIAN SOLAR INC. CS3N-395MS	32
ENPHASE IQ8PLUS-72-2-US	32
INVERTER MOUNT CLIPS	32
TRUNK CABLE	38
COMBINER BOX	1
SPLIT-CORE TRANSFORMERS	2
UNIRAC FLASHLOC	70
INVERTER T-BOLTS	32
RAIL (TOTAL STICKS)	16
SPLICES	10
END CLAMPS	24
MID CLAMPS	52
GROUND LUGS	12
SOLADECK	03
TP-LINK	1
TERMINAL BLOCKS	15
ZIPTIES	100
TRUNK BRANCH TERMINATOR	03
TRUNK WATER TIGHT COVER	06

CONTRACTOR

ADT Solar

22171 MCH RD
MANDEVILLE, LA 70471
PHONE: 9152011490

PROJECT NAME & ADDRESS

DAVID BENTON

9764 CO RD 240,LAKE CITY, FL 32024

COUNTY:-COLUMBIA COUNTY

SYSTEM SIZE
DC SIZE: 12.640 KW DC-(STC)
AC SIZE: 9.280 KW AC

HENRY I. DIFRANCO, JR. LICENSE No. 71950 STATE OF FLORIDA PROFESSIONAL ENGINEER

This item has been digitally signed and sealed by Henry I. DiFranco, Jr., P.E. on **December 14, 2022** Printed copies of this document are not considered signed and sealed and the signature must be verified on any electronic copies.

PRINCIPAL ENGINEERING, INC.
1011 N. CAUSEWAY BLVD. STE 19
MANDEVILLE, LA 70471
985.624.5001
INFO@PI-AEC.COM
FLORIDA FIRM NO. 30649

SHEET TITLE

ATTACHMENT PLAN

DRAWN DATE	12/13/2022
DRAWN BY	BVP

SHEET NUMBER

A-103

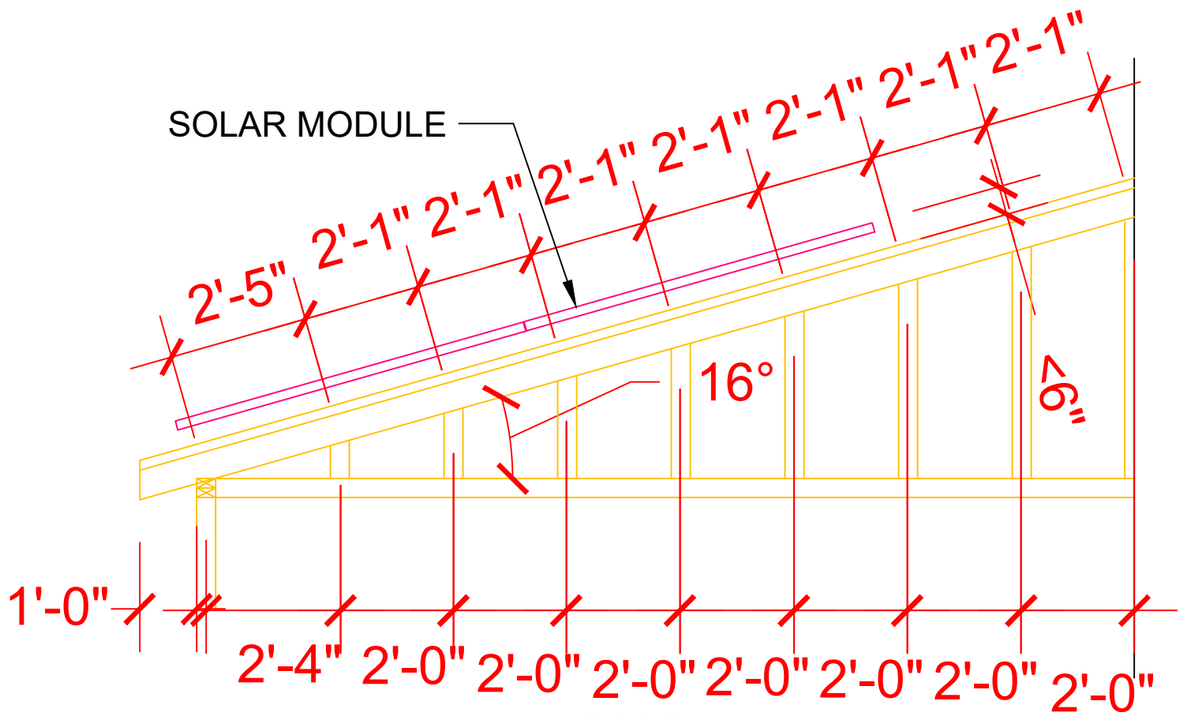

ROOF 1

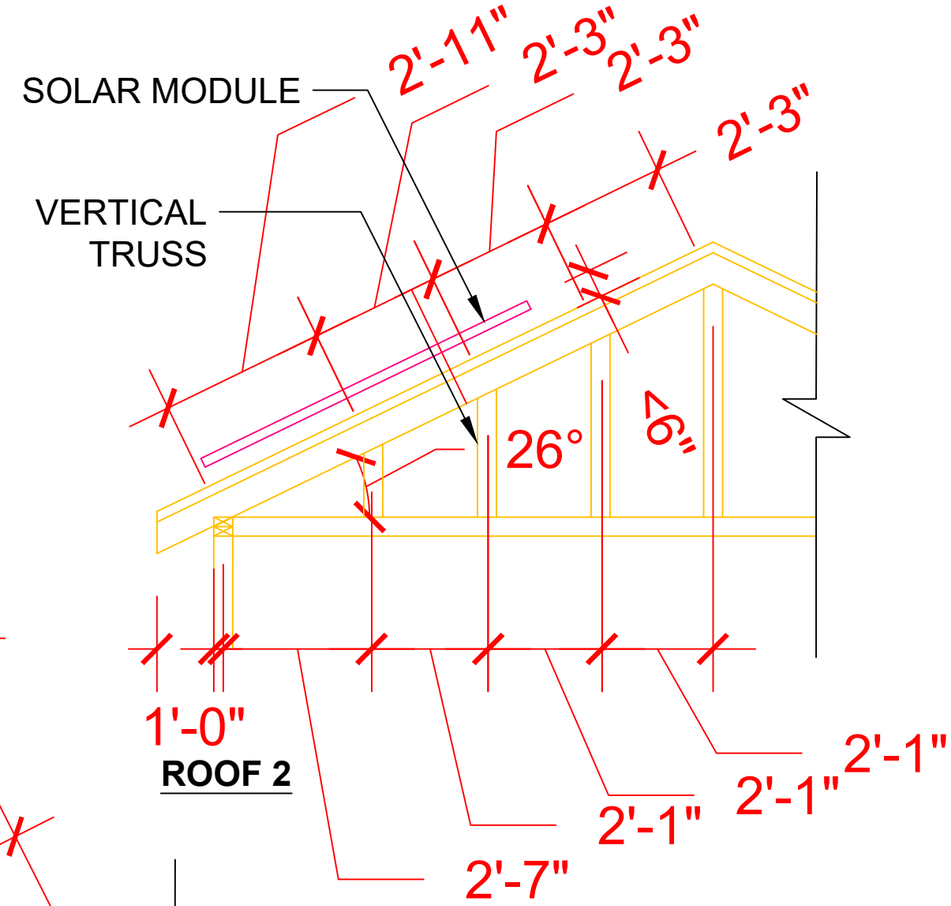

ROOF 2

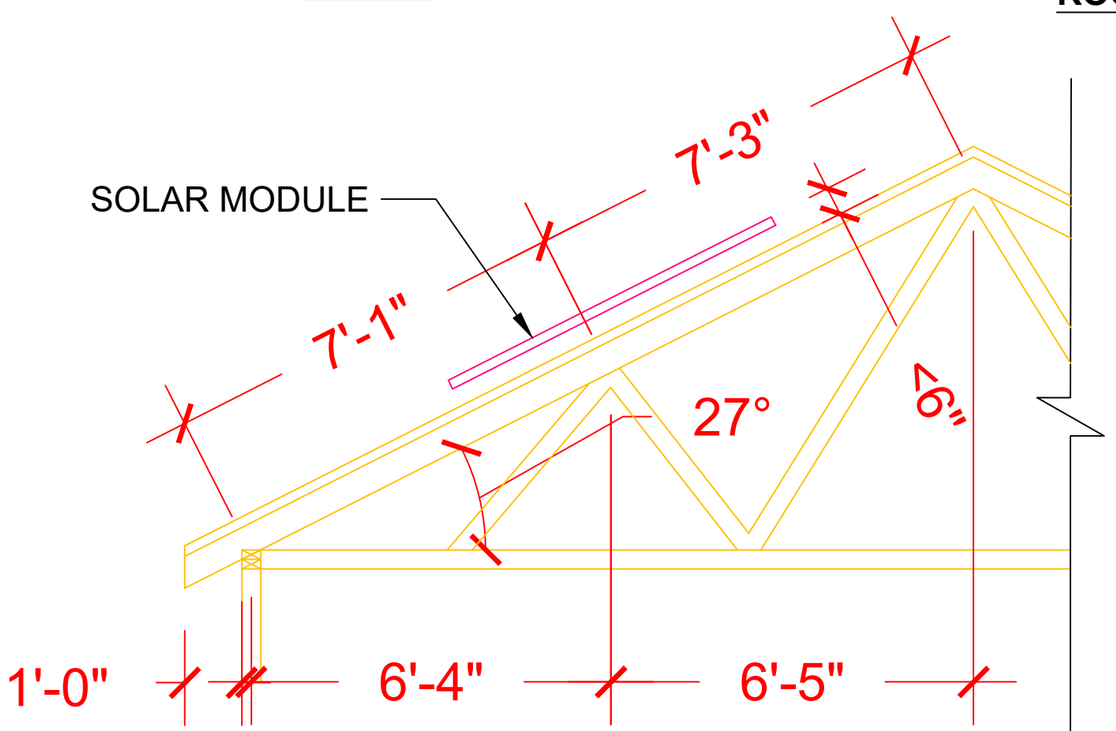

ROOF 3

All dimensions and information provided by ADT Solar inspection.

ROOF SECTION(S)

ROOF 1	ROOF MATERIAL - COMPOSITE SHINGLE TRUSS SIZE - 2"X6" O.C. SPACING - 24"
ROOF 2	ROOF MATERIAL - COMPOSITE SHINGLE TRUSS SIZE - 2"X6" O.C. SPACING - 24"
ROOF 3	ROOF MATERIAL - COMPOSITE SHINGLE TRUSS SIZE - 2"X6" O.C. SPACING - 24"

1 STRUCTURAL PLAN

SCALE:3/8"=1'-0"

CONTRACTOR

ADT Solar

22171 MCH RD
MANDEVILLE, LA 70471
PHONE: 9152011490

PROJECT NAME & ADDRESS

DAVID BENTON

9764 CO RD 240,LAKE CITY, FL 32024

COUNTY:-COLUMBIA COUNTY

SYSTEM SIZE

DC SIZE: 12.640 KW DC-(STC)
AC SIZE: 9.280 KW AC

HENRY I. DIFRANCO, JR. LICENSE No. 71950 STATE OF FLORIDA PROFESSIONAL ENGINEER

This item has been digitally signed and sealed by Henry I. DiFranco, Jr., P.E. on December 14, 2022 Printed copies of this document are not considered signed and sealed and the signature must be verified on any electronic copies.

PRINCIPAL ENGINEERING, INC.
1011 N. CAUSEWAY BLVD. STE 19
MANDEVILLE, LA 70471
985.624.5001
INFO@PI-AEC.COM
FLORIDA FIRM NO. 30649

SHEET TITLE

STRUCTURAL PLAN

DRAWN DATE	12/13/2022
DRAWN BY	BVP

SHEET NUMBER

A-104

WIRE /CONDUIT SCHEDULE	
TAG	DESCRIPTION
1	(3)#10/2 ROMEX IN ATTIC/ (6)#10 THWN-2 ON EXTERIOR & (1)#10 THWN-2 GROUND / (GN)
2	(3)#6 THWN-2 & (1)#10 THWN-2 GROUND / (GN)
3	(3)#6 THWN-2 & (1)#10 THWN-2 GROUND / (GN)
4	(1)#6 BARE GROUND
5	(3)#2/0 THWN-2 & (1)#10 THWN-2 GROUND / (GN)
6	(2)#12 THWN-2 CT WIRES

INVERTER SPECIFICATIONS	
MANUFACTURER / MODEL #	ENPHASE IQ8PLUS-72-2-US MICROINVERTER
MIN/MAX DC VOLT RATING	30V MIN/ 58V MAX
MAX INPUT POWER	235W-440W
NOMINAL AC VOLTAGE RATING	240V/ 211-264V
MAX AC CURRENT	1.21A
MAX MODULES PER STRING	13 (SINGLE PHASE)
MAX OUTPUT POWER	290 VA

(GN) GENERAL CONDUIT NOTE :
CONDUIT TO BE UL LISTED FOR WET LOCATIONS AND UV PROTECTED (EX. -EMT,SCH 80 PVC OR RMC)*FMC MAYBE USED IN INDOOR APPLICATIONS WHERE PERMITTED BY NEC ART .348

DC SIZE 32 X 395W = 12.640 kW DC-STC
AC SIZE 32X 290W = 9.280 kW AC

SOLAR MODULE SPECIFICATIONS	
MANUFACTURER / MODEL #	CANADIAN SOLAR INC. CS3N-395MS
VMP	37V
IMP	10.68A
VOC	44.3V
ISC	11.44A
TEMP. COEFF. VOC	-0.26%/°C
MODULE DIMENSION	76.4"L x 41.3"W x 1.38"D (In Inch)

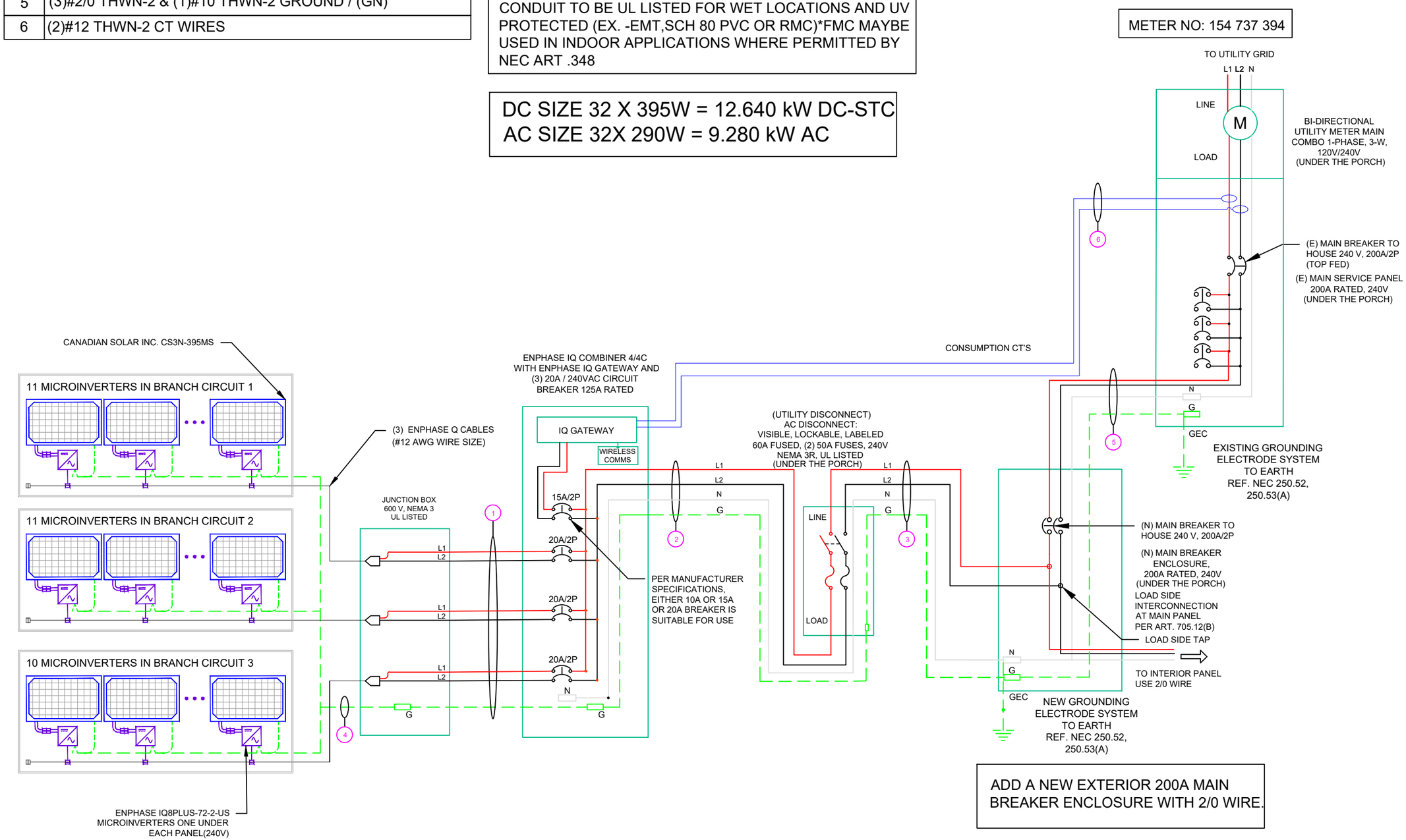

CONTRACTOR

ADT Solar

22171 MCH RD
MANDEVILLE, LA 70471
PHONE: 9152011490

PROJECT NAME & ADDRESS

DAVID BENTON

9764 CO RD 240,LAKE CITY, FL 32024

COUNTY:-COLUMBIA COUNTY

SYSTEM SIZE

DC SIZE: 12.640 KW DC-(STC)
AC SIZE: 9.280 KW AC

NESTOR J. HOUGHTON LICENSE No. 64501 STATE OF FLORIDA PROFESSIONAL ENGINEER

This item has been digitally signed and sealed by Nestor J. Houghton, P.E. on **December 14, 2022** Printed copies of this document are not considered signed and sealed and the signature must be verified on any electronic copies.

PRINCIPAL ENGINEERING, INC.
1011 N. CAUSEWAY BLVD. STE 19
MANDEVILLE, LA 70471
985.624.5001
INFO@PI-AEC.COM
FLORIDA FIRM NO. 30649

SHEET TITLE

LINE DIAGRAM

DRAWN DATE	12/13/2022
DRAWN BY	BVP

SHEET NUMBER

E-601

AMBIENT TEMPERATURE SPECS	
RECORD LOW TEMP	-5°
AMBIENT TEMP (HIGH TEMP 2%)	34°
CONDUIT HEIGHT	0.5"
CONDUCTOR TEMPERATURE RATE	90°

PERCENT OF VALUES	NUMBER OF CURRENT CARRYING CONDUCTORS
.80	4-6
.70	7-9
.50	10-20

CALCULATIONS:

1. CURRENT CARRYING CONDUCTOR

(A) BEFORE IQ COMBINER PANEL

AMBIENT TEMPERATURE - (34)°C ...NEC 310.15(B)(3)(c)
TEMPERATURE DERATE FACTOR - 0.96 ...NEC 310.15(B)(2)(a)
GROUPING FACTOR - 0.8...NEC 310.15(B)(3)(a)

CONDUCTOR AMPACITY
= (INV O/P CURRENT) x 1.25 / A.T.F / G.F ...NEC 690.8(B)
= [(11 x 1.21) x 1.25] / [0.96 x 0.8]
= 21.66A
SELECTED CONDUCTOR - #10 THWN-2 ...NEC 310.15(B)(16)

(B) AFTER IQ COMBINER PANEL
TEMPERATURE DERATE FACTOR - 0.96
GROUPING FACTOR - 1

CONDUCTOR AMPACITY
= (TOTAL INV O/P CURRENT) x 1.25 / 0.96/ 1 ...NEC 690.8(B)
= [(32 x 1.21) x 1.25] / [0.96 x 1]
= 50.42 A
SELECTED CONDUCTOR - #6 THWN-2 ...NEC 310.15(B)(16)

2. PV OVER CURRENT PROTECTION ...NEC 690.9(B)

= TOTAL INVERTER O/P CURRENT x 1.25
= (32 x 1.21) x 1.25 = 48.40 A

CONTRACTOR

ADT Solar

22171 MCH RD
MANDEVILLE, LA 70471
PHONE: 9152011490

PROJECT NAME & ADDRESS
DAVID BENTON

9764 CO RD 240,LAKE CITY, FL 32024

COUNTY:-COLUMBIA COUNTY

SYSTEM SIZE
DC SIZE: 12.640 KW DC-(STC)
AC SIZE: 9.280 KW AC

NESTOR J. HOUGHTON LICENSE No. 64501 STATE OF FLORIDA PROFESSIONAL ENGINEER

This item has been digitally signed and sealed by Nestor J. Houghton, P.E. on **December 14, 2022** Printed copies of this document are not considered signed and sealed and the signature must be verified on any electronic copies.

PRINCIPAL ENGINEERING, INC.
1011 N. CAUSEWAY BLVD. STE 19
MANDEVILLE, LA 70471
985.624.5001
INFO@PI-AEC.COM
FLORIDA FIRM NO. 30649

SHEET TITLE
ELECTRICAL CALCULATIONS

DRAWN DATE	12/13/2022
DRAWN BY	BVP

SHEET NUMBER
E-602

WARNING: PHOTOVOLTAIC POWER SOURCE

SOLAR PV SYSTEM EQUIPPED WITH RAPID SHUTDOWN

TURN RAPID SHUTDOWN SWITCH TO THE 'OFF' POSITION TO SHUT DOWN PV SYSTEM AND REDUCE SHOCK HAZARD IN THE ARRAY

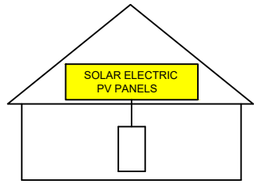

AC DISCONNECT

WARNING

ELECTRIC SHOCK HAZARD

DO NOT TOUCH TERMINALS.

TERMINALS ON BOTH LINE AND LOAD SIDES
MAY BE ENERGIZED IN THE OPEN POSITION

PHOTOVOLTAIC SYSTEM AC DISCONNECT

OPERATING VOLTAGE:_240_VOLTS
OPERATING CURRENT:_38.72_AMPS

AC COMBINER BOX

PHOTOVOLTAIC MICROINVERTERS LOCATED UNDER EACH PV MODULE IN ROOFTOP ARRAY

PHOTOVOLTAIC SYSTEM EQUIPPED WITH RAPID SHUTDOWN

RATED AC OUTPUT CURRENT:____
NOM. OPERATING VOLTAGE:____

WARNING

DUAL POWER SOURCES

SOURCES: UTILITY GRID AND PV SOLAR ELECTRIC SYSTEM

_____KW SOLAR DISCONNECT LOCATED

___FT ←

→ FT___

WARNING

INVERTER OUTPUT CONNECTION

DO NOT RELOCATE THIS OVERCURRENT DEVICE

EMERGENCY RESPONDER
THIS SOLAR PV SYSTEM EQUIPPED WITH RAPID SHUTDOWN

TURN RAPID SHUTDOWN SWITCH TO THE 'OFF' POSITION TO SHUTDOWN ENTIRE PV SYSTEM.

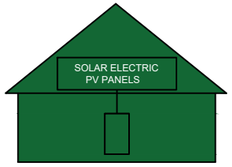

THE LABEL SHALL BE REFLECTIVE, WITH ALL LETTERS CAPITALIZED AND HAVING A MINIMUM HEIGHT OF 3/8 IN. (9.5 MM), IN WHITE ON A RED BACKGROUND.

CAUTION

POWER TO THIS BUILDING IS ALSO SUPPLIED FROM THE FOLLOWING SOURCES WITH DISCONNECTS LOCATED AS SHOWN:

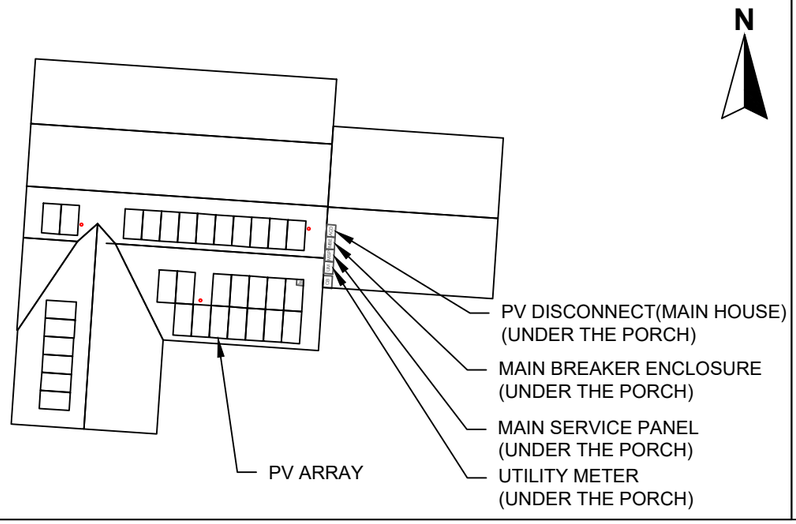

CONTRACTOR

ADT Solar

22171 MCH RD
MANDEVILLE, LA 70471
PHONE: 9152011490

PROJECT NAME & ADDRESS

DAVID BENTON

9764 CO RD 240,LAKE CITY, FL 32024

COUNTY:-COLUMBIA COUNTY

SYSTEM SIZE

DC SIZE: 12.640 KW DC-(STC)
AC SIZE: 9.280 KW AC

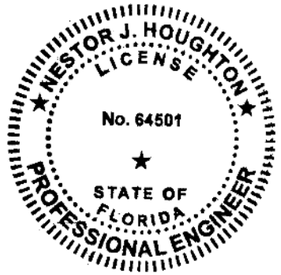

This item has been digitally signed and sealed by Nestor J. Houghton, P.E. on **December 14, 2022** Printed copies of this document are not considered signed and sealed and the signature must be verified on any electronic copies.

PRINCIPAL ENGINEERING, INC.
1011 N. CAUSEWAY BLVD. STE 19
MANDEVILLE, LA 70471
985.624.5001
INFO@PI-AEC.COM
FLORIDA FIRM NO. 30649

SHEET TITLE

PLACARD

DRAWN DATE	12/13/2022
DRAWN BY	BVP

SHEET NUMBER

E-603

NEW

CanadianSolar

HiKuBlack Mono PERC

BLACK FRAME ON BLACK BACKSHEET

F23 Frame

380 W ~ 405 W

CS3N-380|385|390|395|400|405MS

MORE POWER

- Module power up to 405 W
  Module efficiency up to 19.9 %
- Lower LCOE & BOS cost
- Comprehensive LID / LeTID mitigation technology, up to 50% lower degradation
- Better shading tolerance

MORE RELIABLE

- Minimizes micro-crack impacts
- Heavy snow load up to 8100 Pa, enhanced wind load up to 6000 Pa*

* For detailed information, please refer to Installation Manual.

25 Years — Industry Leading Product Warranty on Materials and Workmanship*

25 Years — Linear Power Performance Warranty*

1st year power degradation no more than 2%
Subsequent annual power degradation no more than 0.55%

*Subject to the terms and conditions contained in the applicable Canadian Solar Limited Warranty Statement. Also this 25-year limited product warranty is available only for products installed and operating on residential rooftops in certain regions.

MANAGEMENT SYSTEM CERTIFICATES*

ISO 9001: 2015 / Quality management system
ISO 14001: 2015 / Standards for environmental management system
ISO 45001: 2018 / International standards for occupational health & safety

PRODUCT CERTIFICATES*

IEC 61215 / IEC 61730 / CE
FSEC (US Florida) / UL 61730 / IEC 61701 / IEC 62716

* The specific certificates applicable to different module types and markets will vary, and therefore not all of the certifications listed herein will simultaneously apply to the products you order or use. Please contact your local Canadian Solar sales representative to confirm the specific certificates available for your Product and applicable in the regions in which the products will be used.

CSI SOLAR (USA) CO., LTD. is committed to providing high quality solar photovoltaic modules, solar energy and battery storage solutions to customers. The company was recognized as the No. 1 module supplier for quality and performance/price ratio in the IHS Module Customer Insight Survey. Over the past 20 years, it has successfully delivered over 63 GW of premium-quality solar modules across the world.

CSI SOLAR (USA) CO., LTD.
1350 Treat Blvd. Suite 500, Walnut Creek, CA 94598, USA | www.csisolar.com/na | service.ca@csisolar.com

ENGINEERING DRAWING (mm)

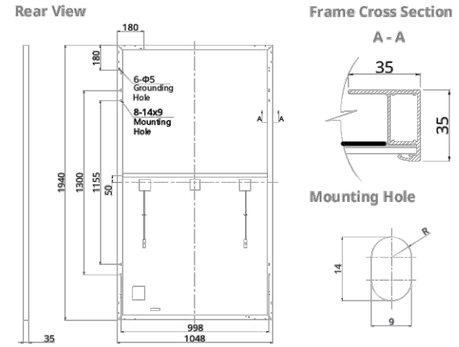

CS3N-400MS / I-V CURVES

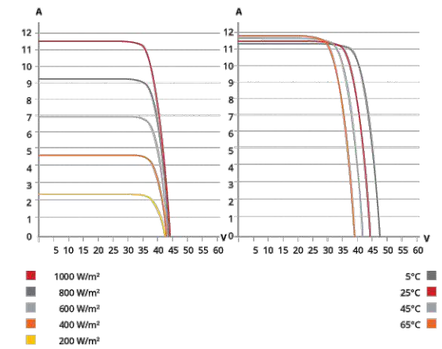

ELECTRICAL DATA | STC*

CS3N	380MS	385MS	390MS	395MS	400MS	405MS
Nominal Max. Power (Pmax)	380 W	385 W	390 W	395 W	400 W	405 W
Opt. Operating Voltage (Vmp)	36.4 V	36.6 V	36.8 V	37.0 V	37.2 V	37.4 V
Opt. Operating Current (Imp)	10.44 A	10.52 A	10.60 A	10.68 A	10.76 A	10.83 A
Open Circuit Voltage (Voc)	43.7 V	43.9 V	44.1 V	44.3 V	44.5 V	44.7 V
Short Circuit Current (Isc)	11.26 A	11.32 A	11.38 A	11.44 A	11.50 A	11.56 A
Module Efficiency	18.7%	18.9%	19.2%	19.4%	19.7%	19.9%
Operating Temperature	-40°C ~ +85°C					
Max. System Voltage	1000V (UL)					
Module Fire Performance	TYPE 2 (UL 61730 1000V)					
Max. Series Fuse Rating	20 A					
Application Classification	Class A					
Power Tolerance	0 ~ + 10 W					

* Under Standard Test Conditions (STC) of irradiance of 1000 W/m², spectrum AM 1.5 and cell temperature of 25°C.

MECHANICAL DATA

Specification	Data
Cell Type	Mono-crystalline
Cell Arrangement	132 [2 X (11 X 6)]
Dimensions	1940 X 1048 X 35 mm (76.4 X 41.3 X 1.38 in)
Weight	23.4 kg (51.6 lbs)
Front Cover	3.2 mm tempered glass
Frame	Anodized aluminium alloy
J-Box	IP68, 3 bypass diodes
Cable	12 AWG (UL)
Cable Length (Including Connector)	Portrait: 400 mm (15.7 in) (+) / 280 mm (11.0 in) (-) (supply additional cable jumper: 2 lines/pallet); landscape: 1250 mm (49.2 in)*
Connector	T4 or MC4 series
Per Pallet	30 pieces
Per Container (40' HQ)	720 pieces

* For detailed information, please contact your local Canadian Solar sales and technical representatives.

ELECTRICAL DATA | NMOT*

CS3N	380MS	385MS	390MS	395MS	400MS	405MS
Nominal Max. Power (Pmax)	284 W	288 W	291 W	295 W	299 W	303 W
Opt. Operating Voltage (Vmp)	34.0 V	34.2 V	34.4 V	34.6 V	34.7 V	34.9 V
Opt. Operating Current (Imp)	8.35 A	8.42 A	8.48 A	8.54 A	8.60 A	8.66 A
Open Circuit Voltage (Voc)	41.2 V	41.4 V	41.6 V	41.8 V	41.9 V	42.1 V
Short Circuit Current (Isc)	9.08 A	9.13 A	9.18 A	9.23 A	9.28 A	9.33 A

* Under Nominal Module Operating Temperature (NMOT), irradiance of 800 W/m² spectrum AM 1.5, ambient temperature 20°C, wind speed 1 m/s.

TEMPERATURE CHARACTERISTICS

Specification	Data
Temperature Coefficient (Pmax)	-0.34 % / °C
Temperature Coefficient (Voc)	-0.26 % / °C
Temperature Coefficient (Isc)	0.05 % / °C
Nominal Module Operating Temperature	42 ± 3°C

PARTNER SECTION

* The specifications and key features contained in this datasheet may deviate slightly from our actual products due to the on-going innovation and product enhancement. CSI Solar Co., Ltd. reserves the right to make necessary adjustment to the information described herein at any time without further notice. Please be kindly advised that PV modules should be handled and installed by qualified people who have professional skills and please carefully read the safety and installation instructions before using our PV modules.

Jan. 2022 | All rights reserved | PV Module Product Datasheet v2.9C25_F23_J3_NA

CONTRACTOR

ADT Solar

22171 MCH RD
MANDEVILLE, LA 70471
PHONE: 9152011490

PROJECT NAME & ADDRESS

DAVID BENTON

9764 CO RD 240,LAKE CITY,
FL 32024

COUNTY:-COLUMBIA COUNTY

SYSTEM SIZE

DC SIZE: 12.640 KW DC-(STC)
AC SIZE: 9.280 KW AC

SHEET TITLE

RESOURCE DOCUMENT

DRAWN DATE	12/13/2022
DRAWN BY	BVP

SHEET NUMBER

R-001

ENPHASE

DATA SHEET

IQ8 and IQ8+ Microinverters

Our newest IQ8 Microinverters are the industry's first microgrid-forming, software-defined microinverters with split-phase power conversion capability to convert DC power to AC power efficiently. The brain of the semiconductor-based microinverter is our proprietary application-specific integrated circuit (ASIC) which enables the microinverter to operate in grid-tied or off-grid modes. This chip is built in advanced 55nm technology with high speed digital logic and has super-fast response times to changing loads and grid events, alleviating constraints on battery sizing for home energy systems.

Part of the Enphase Energy System, IQ8 Series Microinverters integrate with the Enphase IQ Battery, Enphase IQ Gateway, and the Enphase App monitoring and analysis software.

Enphase 25 year limited warranty

IQ8 Series Microinverters redefine reliability standards with more than one million cumulative hours of power-on testing, enabling an industry-leading limited warranty of up to 25 years.

Connect PV modules quickly and easily to IQ8 Series Microinverters using the included Q-DCC-2 adapter cable with plug-n-play MC4 connectors.

UL CERTIFIED SAFETY

IQ8 Series Microinverters are UL Listed as PV Rapid Shut Down Equipment and conform with various regulations, when installed according to manufacturer's instructions.

Easy to install

- Lightweight and compact with plug-n-play connectors
- Power Line Communication (PLC) between components
- Faster installation with simple two-wire cabling

High productivity and reliability

- Produce power even when the grid is down
- More than one million cumulative hours of testing
- Class II double-insulated enclosure
- Optimized for the latest high-powered PV modules

Microgrid-forming

- Complies with the latest advanced grid support
- Remote automatic updates for the latest grid requirements
- Configurable to support a wide range of grid profiles
- Meets CA Rule 21 (UL 1741-SA) requirements

© 2021 Enphase Energy. All rights reserved. Enphase, the Enphase logo, IQ8 microinverters, and other names are trademarks of Enphase Energy, Inc. Data subject to change.

IQ8SP-DS-0002-01-EN-US-2021-10-19

IQ8 and IQ8+ Microinverters

INPUT DATA (DC)		IQ8-60-2-US	IQ8PLUS-72-2-US
Commonly used module pairings[1]	W	235 – 350	235 – 440
Module compatibility		60-cell/120 half-cell	60-cell/120 half-cell and 72-cell/144 half-cell
MPPT voltage range	V	27 – 37	29 – 45
Operating range	V	25 – 48	25 – 58
Min/max start voltage	V	30 / 48	30 / 58
Max input DC voltage	V	50	60
Max DC current[2] [module Isc]	A	15	
Overvoltage class DC port		II	
DC port backfeed current	mA	0	
PV array configuration		1x1 Ungrounded array; No additional DC side protection required; AC side protection requires max 20A per branch circuit	
OUTPUT DATA (AC)		**IQ8-60-2-US**	**IQ8PLUS-72-2-US**
Peak output power	VA	245	300
Max continuous output power	VA	240	290
Nominal (L-L) voltage/range[3]	V	240 / 211 – 264	
Max continuous output current	A	1.0	1.21
Nominal frequency	Hz	60	
Extended frequency range	Hz	50 – 68	
Max units per 20 A (L-L) branch circuit[4]		16	13
Total harmonic distortion		<5%	
Overvoltage class AC port		III	
AC port backfeed current	mA	30	
Power factor setting		1.0	
Grid-tied power factor (adjustable)		0.85 leading – 0.85 lagging	
Peak efficiency	%	97.5	97.6
CEC weighted efficiency	%	97	97
Night-time power consumption	mW	60	
MECHANICAL DATA			
Ambient temperature range		-40°C to +60°C (-40°F to +140°F)	
Relative humidity range		4% to 100% (condensing)	
DC Connector type		MC4	
Dimensions (HxWxD)		212 mm (8.3") x 175 mm (6.9") x 30.2 mm (1.2")	
Weight		1.08 kg (2.38 lbs)	
Cooling		Natural convection – no fans	
Approved for wet locations		Yes	
Acoustic noise at 1m		<60 dBA	
Pollution degree		PD3	
Enclosure		Class II double-insulated, corrosion resistant polymeric enclosure	
Environ. category / UV exposure rating		NEMA Type 6 / outdoor	
COMPLIANCE			
Certifications		CA Rule 21 (UL 1741-SA), UL 62109-1, UL1741/IEEE1547, FCC Part 15 Class B, ICES-0003 Class B, CAN/CSA-C22.2 NO. 107.1-01 This product is UL Listed as PV Rapid Shut Down Equipment and conforms with NEC 2014, NEC 2017, and NEC 2020 section 690.12 and C22.1-2018 Rule 64-218 Rapid Shutdown of PV Systems, for AC and DC conductors, when installed according to manufacturer's instructions.	

(1) No enforced DC/AC ratio. See the compatibility calculator at https://link.enphase.com/module-compatibility (2) Maximum continuous input DC current is 10.6A (3) Nominal voltage range can be extended beyond nominal if required by the utility. (4) Limits may vary. Refer to local requirements to define the number of microinverters per branch in your area.

IQ8SP-DS-0002-01-EN-US-2021-10-19

CONTRACTOR

ADT Solar

22171 MCH RD
MANDEVILLE, LA 70471

PHONE: 9152011490

PROJECT NAME & ADDRESS

DAVID BENTON

9764 CO RD 240,LAKE CITY,
FL 32024

COUNTY:-COLUMBIA COUNTY

SYSTEM SIZE

DC SIZE: 12.640 KW DC-(STC)
AC SIZE: 9.280 KW AC

SHEET TITLE

RESOURCE DOCUMENT

DRAWN DATE	12/13/2022
DRAWN BY	BVP

SHEET NUMBER

R-002

Data Sheet
Enphase Networking

Enphase IQ Combiner 4/4C

X-IQ-AM1-240-4
X-IQ-AM1-240-4C

X-IQ-AM1-240-4C

X-IQ-AM1-240-4

The **Enphase IQ Combiner 4/4C** with Enphase IQ Gateway and integrated LTE-M1 cell modem (included only with IQ Combiner 4C) consolidates interconnection equipment into a single enclosure and streamlines IQ microinverters and storage installations by providing a consistent, pre-wired solution for residential applications. It offers up to four 2-pole input circuits and Eaton BR series busbar assembly.

Smart

- Includes IQ Gateway for communication and control
- Includes Enphase Mobile Connect cellular modem (CELLMODEM-M1-06-SP-05), included only with IQ Combiner 4C
- Includes solar shield to match Enphase IQ Battery aesthetics and deflect heat
- Flexible networking supports Wi-Fi, Ethernet, or cellular
- Optional AC receptacle available for PLC bridge
- Provides production metering and consumption monitoring

Simple

- Centered mounting brackets support single stud mounting
- Supports bottom, back and side conduit entry
- Up to four 2-pole branch circuits for 240 VAC plug-in breakers (not included)
- 80A total PV or storage branch circuits

Reliable

- Durable NRTL-certified NEMA type 3R enclosure
- Five-year limited warranty
- Two years labor reimbursement program coverage included for both the IQ Combiner SKU's
- UL listed

LISTED

To learn more about Enphase offerings, visit **enphase.com**

ENPHASE

Enphase IQ Combiner 4/4C

MODEL NUMBER	
IQ Combiner 4 (X-IQ-AM1-240-4)	IQ Combiner 4 with Enphase IQ Gateway printed circuit board for integrated revenue grade PV production metering (ANSI C12.20 +/- 0.5%) and consumption monitoring (+/- 2.5%). Includes a silver solar shield to match the IQ Battery system and IQ System Controller 2 and to deflect heat.
IQ Combiner 4C (X-IQ-AM1-240-4C)	IQ Combiner 4C with Enphase IQ Gateway printed circuit board for integrated revenue grade PV production metering (ANSI C12.20 +/- 0.5%) and consumption monitoring (+/- 2.5%). Includes Enphase Mobile Connect cellular modem (CELLMODEM-M1-06-SP-05), a plug-and-play industrial-grade cell modem for systems up to 60 microinverters. (Available in the US, Canada, Mexico, Puerto Rico, and the US Virgin Islands, where there is adequate cellular service in the installation area.) Includes a silver solar shield to match the IQ Battery and IQ System Controller and to deflect heat.
ACCESSORIES AND REPLACEMENT PARTS	(not included, order separately)
Ensemble Communications Kit COMMS-CELLMODEM-M1-06 CELLMODEM-M1-06-SP-05 CELLMODEM-M1-06-AT-05	- Includes COMMS-KIT-01 and CELLMODEM-M1-06-SP-05 with 5-year Sprint data plan for Ensemble sites - 4G based LTE-M1 cellular modem with 5-year Sprint data plan - 4G based LTE-M1 cellular modem with 5-year AT&T data plan
Circuit Breakers BRK-10A-2-240V BRK-15A-2-240V BRK-20A-2P-240V BRK-15A-2P-240V-B BRK-20A-2P-240V-B	Supports Eaton BR210, BR215, BR220, BR230, BR240, BR250, and BR260 circuit breakers. Circuit breaker, 2 pole, 10A, Eaton BR210 Circuit breaker, 2 pole, 15A, Eaton BR215 Circuit breaker, 2 pole, 20A, Eaton BR220 Circuit breaker, 2 pole, 15A, Eaton BR215B with hold down kit support Circuit breaker, 2 pole, 20A, Eaton BR220B with hold down kit support
EPLC-01	Power line carrier (communication bridge pair), quantity - one pair
XA-SOLARSHIELD-ES	Replacement solar shield for IQ Combiner 4/4C
XA-PLUG-120-3	Accessory receptacle for Power Line Carrier in IQ Combiner 4/4C (required for EPLC-01)
XA-ENV-PCBA-3	Replacement IQ Gateway printed circuit board (PCB) for Combiner 4/4C
X-IQ-NA-HD-125A	Hold down kit for Eaton circuit breaker with screws.
ELECTRICAL SPECIFICATIONS	
Rating	Continuous duty
System voltage	120/240 VAC, 60 Hz
Eaton BR series busbar rating	125 A
Max. continuous current rating	65 A
Max. continuous current rating (input from PV/storage)	64 A
Max. fuse/circuit rating (output)	90 A
Branch circuits (solar and/or storage)	Up to four 2-pole Eaton BR series Distributed Generation (DG) breakers only (not included)
Max. total branch circuit breaker rating (input)	80A of distributed generation / 95A with IQ Gateway breaker included
Production metering CT	200 A solid core pre-installed and wired to IQ Gateway
Consumption monitoring CT (CT-200-SPLIT)	A pair of 200 A split core current transformers
MECHANICAL DATA	
Dimensions (WxHxD)	37.5 x 49.5 x 16.8 cm (14.75" x 19.5" x 6.63"). Height is 21.06" (53.5 cm) with mounting brackets.
Weight	7.5 kg (16.5 lbs)
Ambient temperature range	-40° C to +46° C (-40° to 115° F)
Cooling	Natural convection, plus heat shield
Enclosure environmental rating	Outdoor, NRTL-certified, NEMA type 3R, polycarbonate construction
Wire sizes	• 20 A to 50 A breaker inputs: 14 to 4 AWG copper conductors • 60 A breaker branch input: 4 to 1/0 AWG copper conductors • Main lug combined output: 10 to 2/0 AWG copper conductors • Neutral and ground: 14 to 1/0 copper conductors Always follow local code requirements for conductor sizing.
Altitude	To 2000 meters (6,560 feet)
INTERNET CONNECTION OPTIONS	
Integrated Wi-Fi	802.11b/g/n
Cellular	CELLMODEM-M1-06-SP-05, CELLMODEM-M1-06-AT-05 (4G based LTE-M1 cellular modem). Note that an Enphase Mobile Connect cellular modem is required for all Ensemble installations.
Ethernet	Optional, 802.3, Cat5E (or Cat 6) UTP Ethernet cable (not included)
COMPLIANCE	
Compliance, IQ Combiner	UL 1741, CAN/CSA C22.2 No. 107.1, 47 CFR, Part 15, Class B, ICES 003 Production metering: ANSI C12.20 accuracy class 0.5 (PV production) Consumption metering: accuracy class 2.5
Compliance, IQ Gateway	UL 60601-1/CANCSA 22.2 No. 61010-1

To learn more about Enphase offerings, visit **enphase.com**

ENPHASE

© 2021 Enphase Energy. All rights reserved. Enphase, the Enphase logo, IQ Combiner 4/4C, and other names are trademarks of Enphase Energy, Inc. Data subject to change. 10-21-2021

CONTRACTOR

ADT Solar

22171 MCH RD
MANDEVILLE, LA 70471
PHONE: 9152011490

PROJECT NAME & ADDRESS

DAVID BENTON

9764 CO RD 240,LAKE CITY,
FL 32024

COUNTY:-COLUMBIA COUNTY

SYSTEM SIZE

DC SIZE: 12.640 KW DC-(STC)
AC SIZE: 9.280 KW AC

SHEET TITLE
RESOURCE DOCUMENT

DRAWN DATE	12/13/2022
DRAWN BY	BVP

SHEET NUMBER

R-003

PRO SERIES END CLAMP

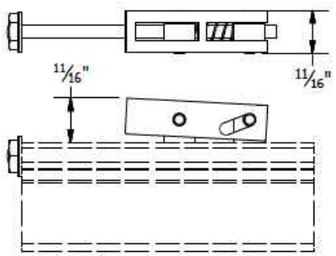

PRO SERIES MID CLAMP

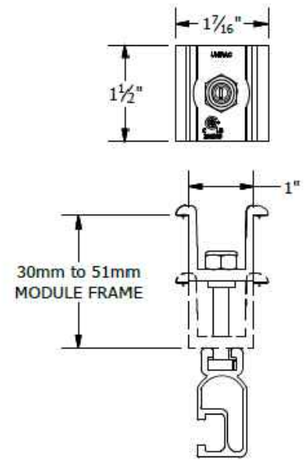

PART # TABLE	
P/N	DESCRIPTION
302035M	ENDCLAMP PRO
302030M	MIDCLAMP PRO - MILL
302030D	MIDCLAMP PRO - DRK

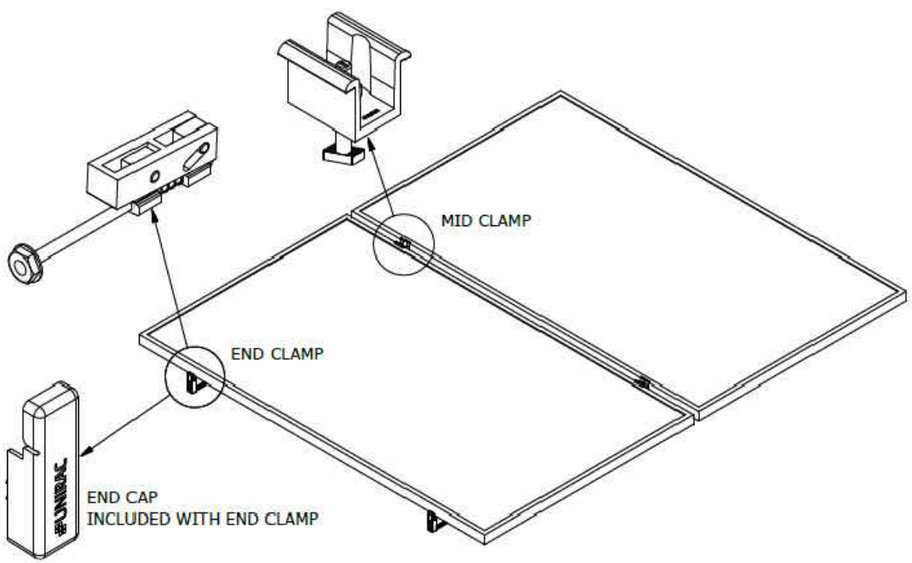

UNIRAC
1411 BROADWAY BLVD. NE
ALBUQUERQUE, NM 87102 USA
PHONE: 505.242.6411
WWW.UNIRAC.COM

PRODUCT LINE:	SOLARMOUNT
DRAWING TYPE:	PART & ASSEMBLY
DESCRIPTION:	PRO SERIES BONDING CLAMPS
REVISION DATE:	10/26/2017

DRAWING NOT TO SCALE
ALL DIMENSIONS ARE NOMINAL

PRODUCT PROTECTED BY ONE OR MORE US PATENTS
LEGAL NOTICE

SM-A01
SHEET

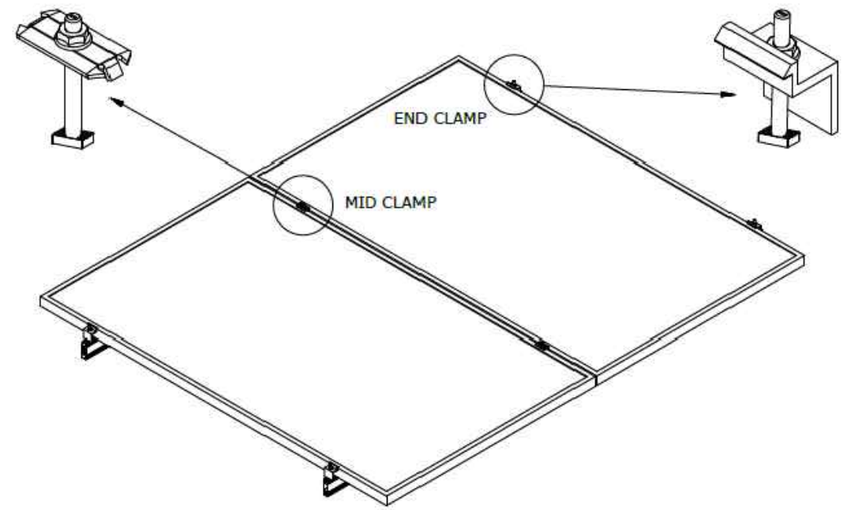

PART # TABLE	
P/N	DESCRIPTION
302027C	SM BND MIDCLAMP BC SS
302027D	SM BND MIDCLAMP BC DRK SS
302028C	SM BND MIDCLAMP EF SS
302028D	SM BND MIDCLAMP EF DRK SS
302029C	SM BND MIDCLAMP DK SS
302029D	SM BND MIDCLAMP DK DRK SS
	FOR BONDING END CLAMP REFER TO SHEET SM-P05

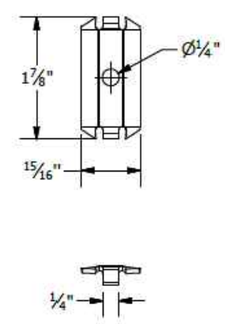

BONDING SM MID CLAMP

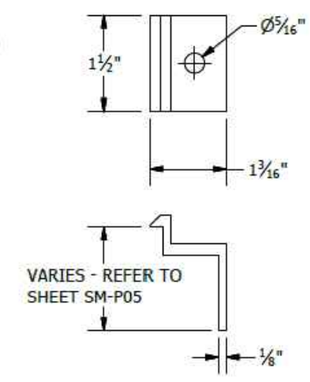

BONDING SM END CLAMP

UNIRAC
1411 BROADWAY BLVD. NE
ALBUQUERQUE, NM 87102 USA
PHONE: 505.242.6411
WWW.UNIRAC.COM

PRODUCT LINE:	SOLARMOUNT
DRAWING TYPE:	PART & ASSEMBLY
DESCRIPTION:	BONDING TOP CLAMPS
REVISION DATE:	10/26/2017

DRAWING NOT TO SCALE
ALL DIMENSIONS ARE NOMINAL

PRODUCT PROTECTED BY ONE OR MORE US PATENTS
LEGAL NOTICE

SM-A01A
SHEET

CONTRACTOR

ADT Solar

22171 MCH RD
MANDEVILLE, LA 70471
PHONE: 9152011490

PROJECT NAME & ADDRESS

DAVID BENTON

9764 CO RD 240,LAKE CITY,
FL 32024

COUNTY:-COLUMBIA COUNTY

SYSTEM SIZE
DC SIZE: 12.640 KW DC-(STC)
AC SIZE: 9.280 KW AC

SHEET TITLE
RESOURCE DOCUMENT

DRAWN DATE	12/13/2022
DRAWN BY	BVP

SHEET NUMBER
R-004

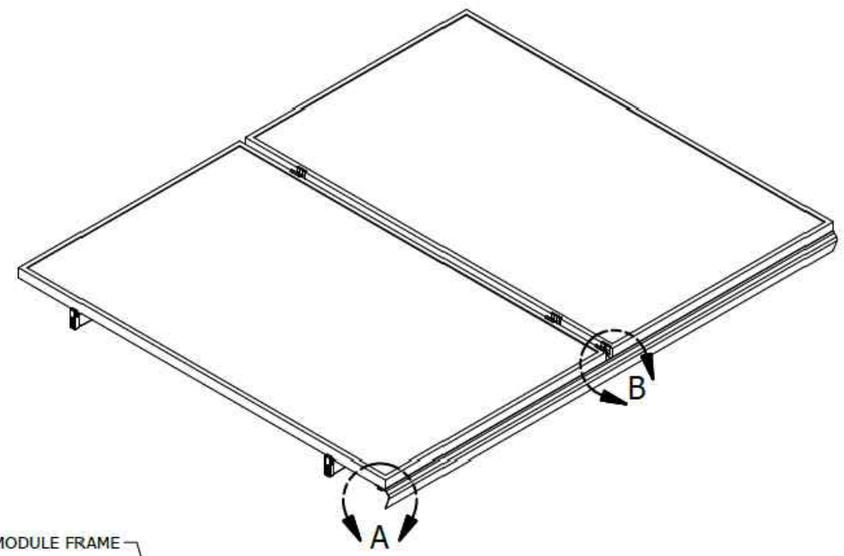

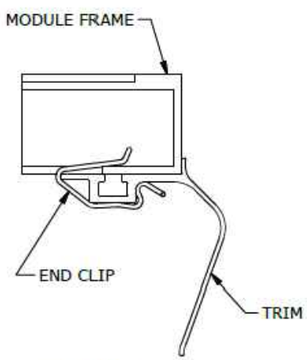

DETAIL A
TRIM END CLIP

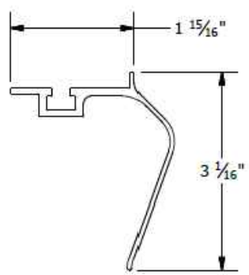

TRIM

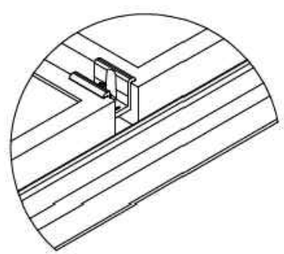

DETAIL B
MID CLAMP TRIM CONNECTION

PART # TABLE		
P/N	DESCRIPTION	LENGTH
206072D-B	SM TRIM DRK	168"
008025S	SM TRIM END CLIP	-

UNIRAC
1411 BROADWAY BLVD. NE
ALBUQUERQUE, NM 87102 USA
PHONE: 505.242.6411
WWW.UNIRAC.COM

PRODUCT LINE:	SOLARMOUNT
DRAWING TYPE:	PART & ASSEMBLY
DESCRIPTION:	SM TRIM END CLIP
REVISION DATE:	9/27/2017

DRAWING NOT TO SCALE
ALL DIMENSIONS ARE NOMINAL

PRODUCT PROTECTED BY ONE OR MORE US PATENTS
LEGAL NOTICE

SM-A02
SHEET

PART TABLE	
P/N	DESCRIPTION
004085M	FLASHLOC COMP KIT MILL, 20 PACK
004085D	FLASHLOC COMP KIT DARK, 20 PACK

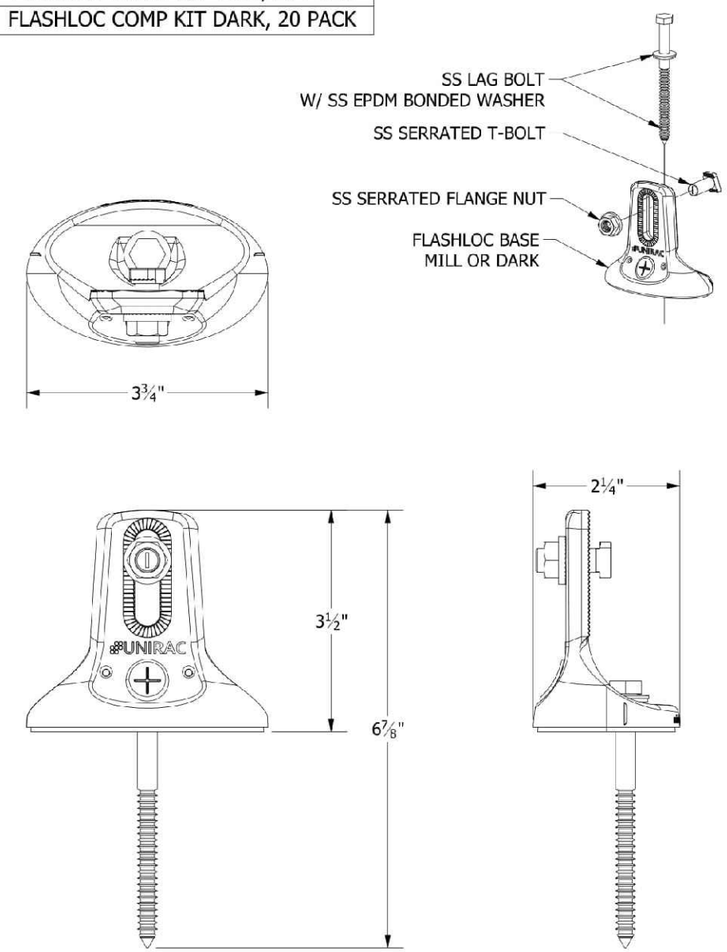

UNIRAC
1411 BROADWAY BLVD. NE
ALBUQUERQUE, NM 87102 USA
PHONE: 505.242.6411
WWW.UNIRAC.COM

PRODUCT LINE:	SOLARMOUNT
DRAWING TYPE:	PART DRAWING
DESCRIPTION:	FLASHLOC COMP KIT
REVISION DATE:	10/3/2019

DRAWING NOT TO SCALE
ALL DIMENSIONS ARE NOMINAL

PRODUCT PROTECTED BY ONE OR MORE US PATENTS
LEGAL NOTICE

FL-A01
SHEET

CONTRACTOR

ADT Solar

22171 MCH RD
MANDEVILLE, LA 70471
PHONE: 9152011490

PROJECT NAME & ADDRESS
DAVID BENTON

9764 CO RD 240,LAKE CITY,
FL 32024

COUNTY:-COLUMBIA COUNTY

SYSTEM SIZE
DC SIZE: 12.640 KW DC-(STC)
AC SIZE: 9.280 KW AC

SHEET TITLE
RESOURCE DOCUMENT

DRAWN DATE	12/13/2022
DRAWN BY	BVP

SHEET NUMBER
R-005

BONDING SPLICE BAR

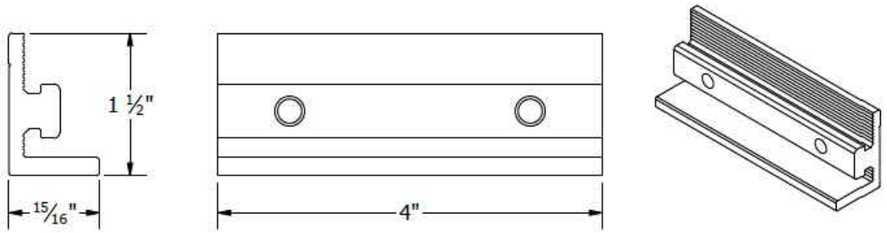

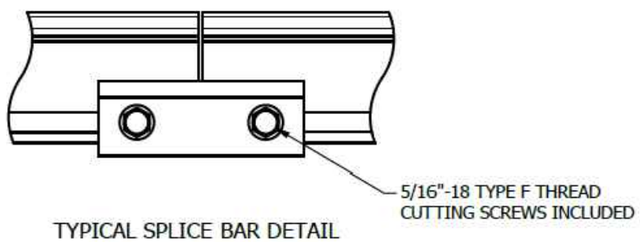

TYPICAL SPLICE BAR DETAIL

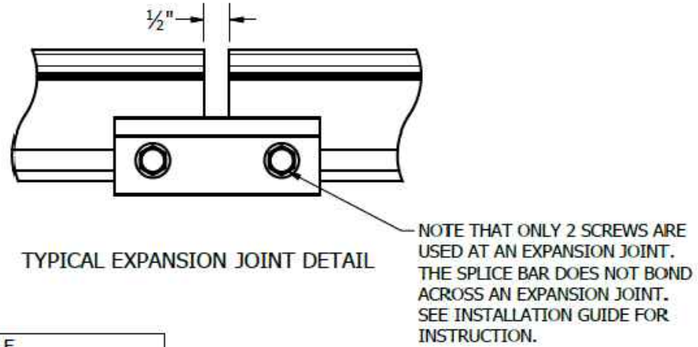

TYPICAL EXPANSION JOINT DETAIL

PART # TABLE	
P/N	DESCRIPTION
303019M	BND SPLICE BAR PRO SERIES MILL
303019D	BND SPLICE BAR PRO SERIES DRK

UNIRAC
1411 BROADWAY BLVD. NE
ALBUQUERQUE, NM 87102 USA
PHONE: 505.242.6411
WWW.UNIRAC.COM

PRODUCT LINE:	SOLARMOUNT
DRAWING TYPE:	PART & ASSEMBLY
DESCRIPTION:	BONDING SPLICE BAR PRO SERIES
REVISION DATE:	8/23/2018

DRAWING NOT TO SCALE
ALL DIMENSIONS ARE NOMINAL

PRODUCT PROTECTED BY ONE OR MORE US PATENTS
LEGAL NOTICE

SM-A05
SHEET

BONDING SPLICE BAR

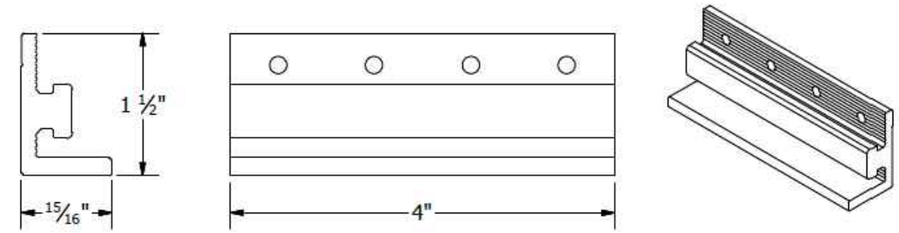

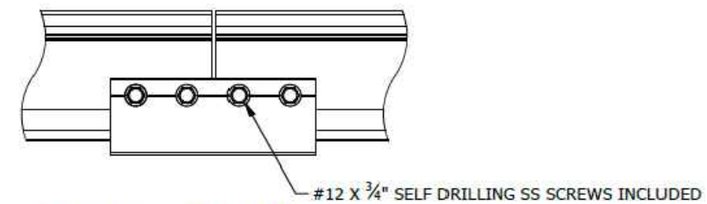

TYPICAL SPLICE BAR DETAIL

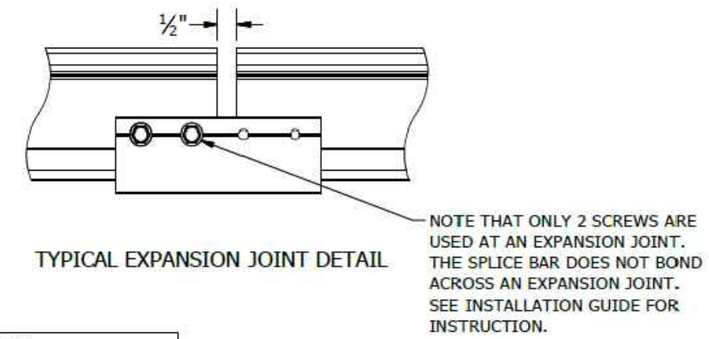

TYPICAL EXPANSION JOINT DETAIL

PART # TABLE	
P/N	DESCRIPTION
303018C	BND SPLICE BAR SERRATED CLR
303018D	BND SPLICE BAR SERRATED DRK

UNIRAC
1411 BROADWAY BLVD. NE
ALBUQUERQUE, NM 87102 USA
PHONE: 505.242.6411
WWW.UNIRAC.COM

PRODUCT LINE:	SOLARMOUNT
DRAWING TYPE:	PART & ASSEMBLY
DESCRIPTION:	BONDING SPLICE BAR
REVISION DATE:	9/27/2017

DRAWING NOT TO SCALE
ALL DIMENSIONS ARE NOMINAL

PRODUCT PROTECTED BY ONE OR MORE US PATENTS
LEGAL NOTICE

SM-A05
SHEET

CONTRACTOR

ADT Solar

22171 MCH RD
MANDEVILLE, LA 70471
PHONE: 9152011490

PROJECT NAME & ADDRESS

DAVID BENTON

9764 CO RD 240,LAKE CITY,
FL 32024

COUNTY:-COLUMBIA COUNTY

SYSTEM SIZE
DC SIZE: 12.640 KW DC-(STC)
AC SIZE: 9.280 KW AC

SHEET TITLE
RESOURCE DOCUMENT

DRAWN DATE	12/13/2022
DRAWN BY	BVP

SHEET NUMBER
R-006

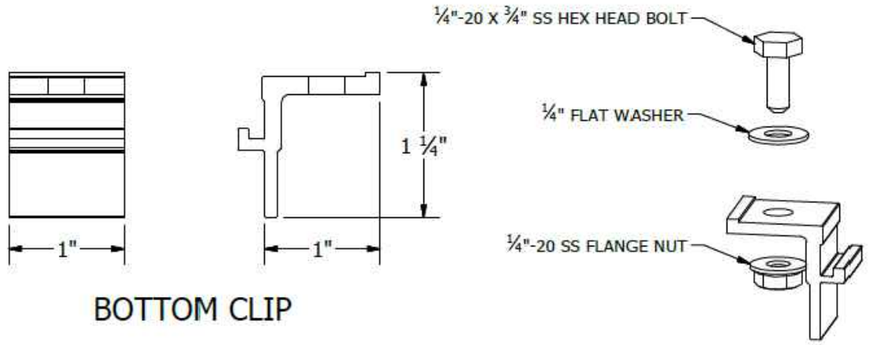

BOTTOM CLIP

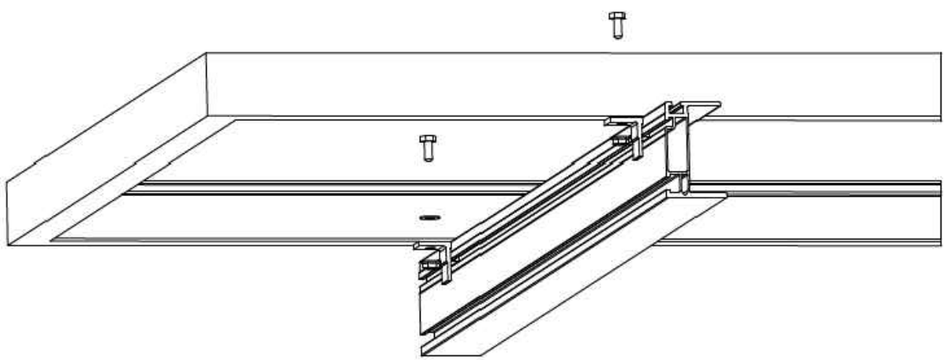

DETAIL A

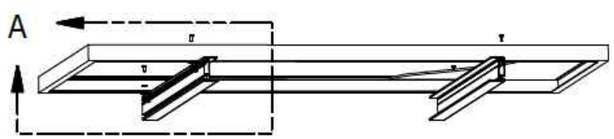

PART # TABLE	
P/N	DESCRIPTION
302000C	SMHD BOTTOM CLIPS W/HDW CLR

UNIRAC
1411 BROADWAY BLVD. NE
ALBUQUERQUE, NM 87102 USA
PHONE: 505.242.6411
WWW.UNIRAC.COM

PRODUCT LINE:	SOLARMOUNT HD
DRAWING TYPE:	PART & ASSEMBLY
DESCRIPTION:	BOTTOM CLIP
REVISION DATE:	9/27/2017

DRAWING NOT TO SCALE
ALL DIMENSIONS ARE NOMINAL

PRODUCT PROTECTED BY ONE OR MORE US PATENTS
LEGAL NOTICE

SM-A10
SHEET

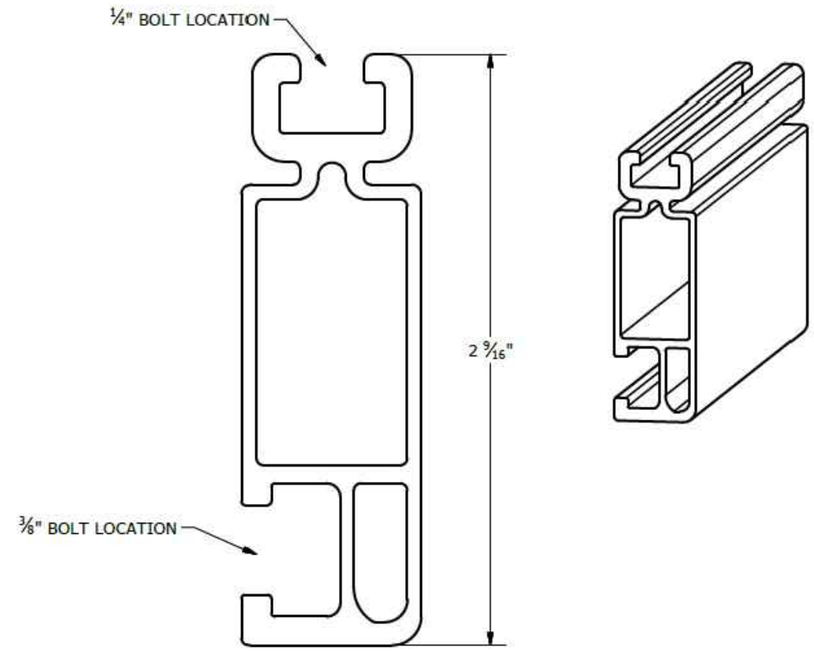

PART # TABLE		
P/N	DESCRIPTION	LENGTH
320132M	SM RAIL 132" MILL	132"
310132C	SM RAIL 132" CLR	132"
320168M	SM RAIL 168" MILL	168"
310168C	SM RAIL 168" CLR	168"
320168D	SM RAIL 168" DRK	168"
320208M	SM RAIL 208" MILL	208"
310208C	SM RAIL 208" CLR	208"
320240M	SM RAIL 240" MILL	240"
310240C	SM RAIL 240" CLR	240"
310240D	SM RAIL 240" DRK	240"

UNIRAC
1411 BROADWAY BLVD. NE
ALBUQUERQUE, NM 87102 USA
PHONE: 505.242.6411
WWW.UNIRAC.COM

PRODUCT LINE:	SOLARMOUNT
DRAWING TYPE:	PART DETAIL
DESCRIPTION:	STANDARD RAIL
REVISION DATE:	9/11/2017

DRAWING NOT TO SCALE
ALL DIMENSIONS ARE NOMINAL

PRODUCT PROTECTED BY ONE OR MORE US PATENTS
LEGAL NOTICE

SM-P01
SHEET

CONTRACTOR

ADT Solar

22171 MCH RD
MANDEVILLE, LA 70471
PHONE: 9152011490

PROJECT NAME & ADDRESS

DAVID BENTON

9764 CO RD 240,LAKE CITY,
FL 32024

COUNTY:-COLUMBIA COUNTY

SYSTEM SIZE
DC SIZE: 12.640 KW DC-(STC)
AC SIZE: 9.280 KW AC

SHEET TITLE
RESOURCE DOCUMENT

DRAWN DATE	12/13/2022
DRAWN BY	BVP

SHEET NUMBER
R-007

NOTES:
1. END CAP INCLUDED WITH EVERY END CLAMP.
2. END CAP FITS SOLARMOUNT LIGHT AND STANDARD RAIL PROFILES.

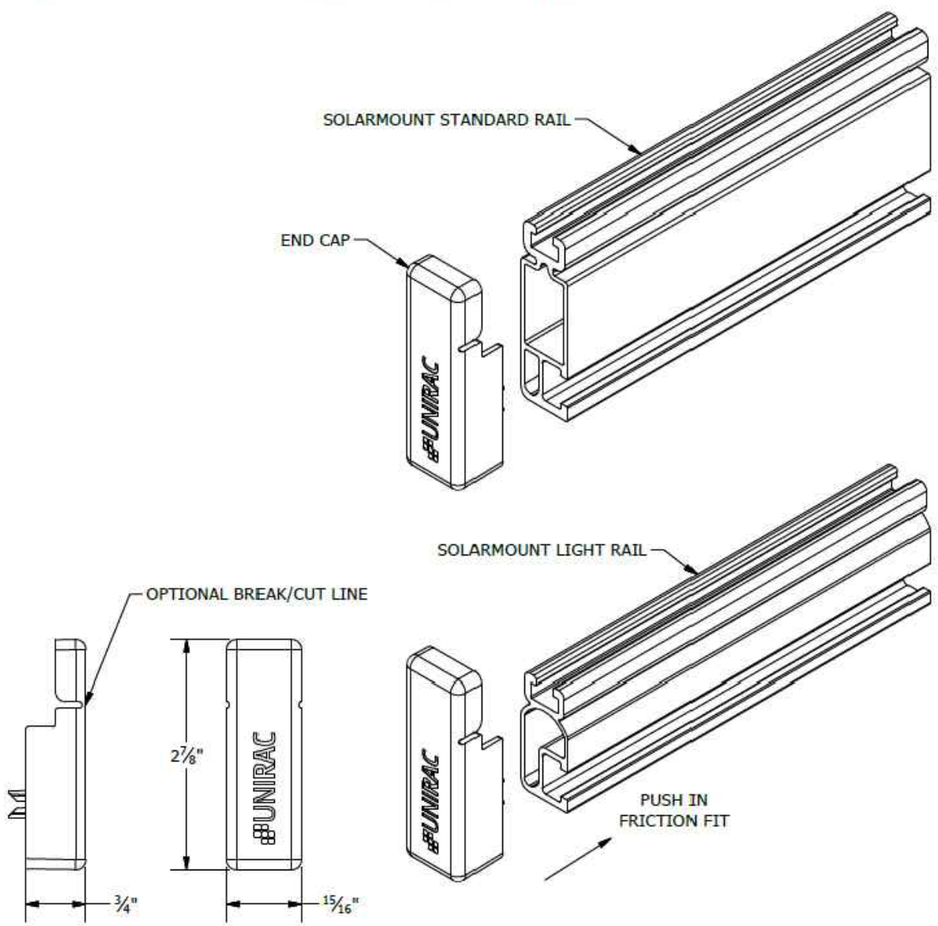

PRODUCT LINE:	SOLARMOUNT
DRAWING TYPE:	PART DETAIL
DESCRIPTION:	END CAPS
REVISION DATE:	9/27/2017

DRAWING NOT TO SCALE
ALL DIMENSIONS ARE NOMINAL

PRODUCT PROTECTED BY ONE OR MORE US PATENTS
LEGAL NOTICE

SM-P04
SHEET

UNIRAC
1411 BROADWAY BLVD. NE
ALBUQUERQUE, NM 87102 USA
PHONE: 505.242.6411
WWW.UNIRAC.COM

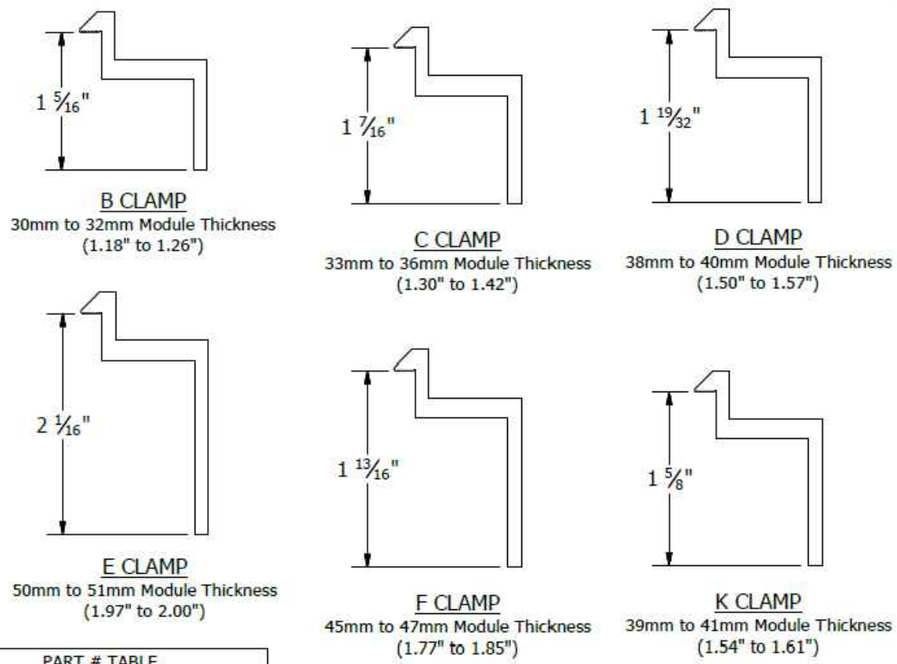

PART # TABLE	
P/N	DESCRIPTION
302021C	SM ENDCLAMP B CLR AL
302021D	SM ENDCLAMP B DRK AL
302022C	SM ENDCLAMP C CLR AL
302022D	SM ENDCLAMP C DRK AL
302023C	SM ENDCLAMP D CLR AL
302023D	SM ENDCLAMP D DRK AL
303024C	SM ENDCLAMP E CLR AL
302024D	SM ENDCLAMP E DRK AL
302025C	SM ENDCLAMP F CLR AL
302025D	SM ENDCLAMP F DRK AL
302026C	SM ENDCLAMP K CLR AL
302026D	SM ENDCLAMP K DRK AL

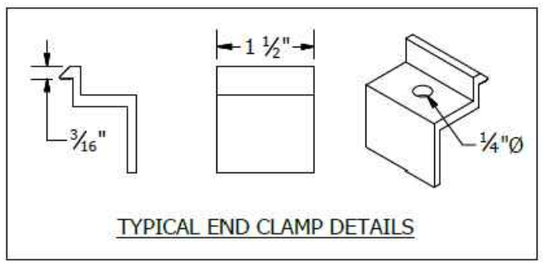

UNIRAC
1411 BROADWAY BLVD. NE
ALBUQUERQUE, NM 87102 USA
PHONE: 505.242.6411
WWW.UNIRAC.COM

PRODUCT LINE:	SOLARMOUNT
DRAWING TYPE:	PART DETAIL
DESCRIPTION:	END CLAMPS - TOP MOUNTING
REVISION DATE:	9/27/2017

DRAWING NOT TO SCALE
ALL DIMENSIONS ARE NOMINAL

PRODUCT PROTECTED BY ONE OR MORE US PATENTS
LEGAL NOTICE

SM-P05
SHEET

CONTRACTOR

ADT Solar

22171 MCH RD
MANDEVILLE, LA 70471
PHONE: 9152011490

PROJECT NAME & ADDRESS
DAVID BENTON

9764 CO RD 240,LAKE CITY, FL 32024

COUNTY:-COLUMBIA COUNTY

SYSTEM SIZE
DC SIZE: 12.640 KW DC-(STC)
AC SIZE: 9.280 KW AC

SHEET TITLE
RESOURCE DOCUMENT

DRAWN DATE	12/13/2022
DRAWN BY	BVP

SHEET NUMBER
R-008