Columbia County Building Permit

This Permit Expires One Year From the Date of Issue

PERMIT
000023782

APPLICANT ABBY STALVEY PHONE 758-8954

ADDRESS 942 SW MT. CAMEL AVE LAKE CITY FL 32024

OWNER MIKE & ABBY STALVEY PHONE 758-8954

ADDRESS 942 SW MT. CARMEL AVE LAKE CITY FL 32024

CONTRACTOR OWNER BUILDER PHONE

LOCATION OF PROPERTY 90W, TL ON 247S, TR ON TROY ROAD, TR ON MT. CARMEL, 1/4 MILE
4TH DRIVE ON RIGHT, FOLLOW INTO PINE TREES

TYPE DEVELOPMENT SFD,UTILITY ESTIMATED COST OF CONSTRUCTION 106950.00

HEATED FLOOR AREA 2139.00 TOTAL AREA 4136.00 HEIGHT .00 STORIES 1

FOUNDATION CONC WALLS FRAMED ROOF PITCH 7/12 FLOOR SLAB

LAND USE & ZONING RR MAX. HEIGHT 26

Minimum Set Back Requirments: STREET-FRONT 25.00 REAR 15.00 SIDE 10.00

NO. EX.D.U. 1 FLOOD ZONE X DEVELOPMENT PERMIT NO.

PARCEL ID 09-4S-16-02820-009 SUBDIVISION

LOT BLOCK PHASE UNIT TOTAL ACRES

Culvert Permit No.	Culvert Waiver	Contractor's License Number	Applicant/Owner/Contractor	
EXISTING	05-1053-E	BK	JH	Y
Driveway Connection	Septic Tank Number	LU & Zoning checked by	Approved for Issuance	New Resident

COMMENTS: ONE FOOT ABOVE THE ROAD, NOC ON FILE
MH TO BE REMOVED AFTER FINAL INSPECTION

Check # or Cash 9000

FOR BUILDING & ZONING DEPARTMENT ONLY

Temporary Power date/app. by Foundation date/app. by Monolithic (footer/Slab) date/app. by

Under slab rough-in plumbing date/app. by Slab date/app. by Sheathing/Nailing date/app. by

Framing date/app. by Rough-in plumbing above slab and below wood floor date/app. by

Electrical rough-in date/app. by Heat & Air Duct date/app. by Peri. beam (Lintel) date/app. by

Permanent power date/app. by C.O. Final date/app. by Culvert date/app. by

M/H tie downs, blocking, electricity and plumbing date/app. by Pool date/app. by

Reconnection date/app. by Pump pole date/app. by Utility Pole date/app. by

M/H Pole date/app. by Travel Trailer date/app. by Re-roof date/app. by

BUILDING PERMIT FEE $ 535.00 CERTIFICATION FEE $ 20.68 SURCHARGE FEE $ 20.68

MISC. FEES $ .00 ZONING CERT. FEE $ 50.00 FIRE FEE $ .00 WASTE FEE $

FLOOD DEVELOPMENT FEE $ FLOOD ZONE FEE $ 25.00 CULVERT FEE $ **TOTAL FEE** 651.36

INSPECTORS OFFICE CLERKS OFFICE

NOTICE: IN ADDITION TO THE REQUIREMENTS OF THIS PERMIT, THERE MAY BE ADDITIONAL RESTRICTIONS APPLICABLE TO THIS PROPERTY THAT MAY BE FOUND IN THE PUBLIC RECORDS OF THIS COUNTY. AND THERE MAY BE ADDITIONAL PERMITS REQUIRED FROM OTHER GOVERNMENTAL ENTITIES SUCH AS WATER MANAGEMENT DISTRICTS, STATE AGENCIES, OR FEDERAL AGENCIES.

"WARNING TO OWNER: YOUR FAILURE TO RECORD A NOTICE OF COMMENCEMENT MAY RESULT IN YOUR PAYING TWICE FOR IMPROVEMENTS TO YOUR PROPERTY. IF YOU INTEND TO OBTAIN FINANCING, CONSULT WITH YOUR LENDER OR AN ATTORNEY BEFORE RECORDING YOUR NOTICE OF COMMENCEMENT."

This Permit Must Be Prominently Posted on Premises During Construction

PLEASE NOTIFY THE COLUMBIA COUNTY BUILDING DEPARTMENT AT LEAST 24 HOURS IN ADVANCE OF EACH INSPECTION, IN ORDER THAT IT MAY BE MADE WITHOUT DELAY OR INCONVIENCE, PHONE 758-1008. THIS PERMIT IS NOT VALID UNLESS THE WORK AUTHORIZED BY IT IS COMMENCED WITHIN 6 MONTHS AFTER ISSUANCE.

The Issuance of this Permit Does Not Waive Compliance by Permittee with Deed Restrictions.

Columbia County Building Permit Application

Revised 9-23-04

For Office Use Only Application # 0508-92 Date Received 8/24/05 By JW Permit # 23782

Application Approved by - Zoning Official BLK Date 19.10.05 Plans Examiner OK JTH Date 10-21-05

Flood Zone X Development Permit N/A Zoning RR Land Use Plan Map Category Res. V.L Dev.

Comments SFD WILL REPLACE MH WHEN BUILT. - CK#

Applicants Name Abby Stalvey / Mike Stalvey, Jr. Phone 758-8954 FAX 752-5456

Address 942 SW Mt. Carmel Ave, Lake City, 32024

Owners Name Mike + Abby Stalvey Phone 758-8954

911 Address 942 SW Mt. Carmel Ave, Lake City, 32024

Contractors Name Owner Builder Phone

Address SAME AS ABOVE

Fee Simple Owner Name & Address First Federal Savings Bank

Bonding Co. Name & Address —

Architect/Engineer Name & Address Bill Freeman / Freeman Design Group

Mortgage Lenders Name & Address First Federal

Circle the correct power company - FL Power & Light - Clay Elec. - Suwannee Valley Elec. - Progressive Energy

Property ID Number TBD 2006 09-4S-16- 02820-009 Estimated Cost of Construction $156,000

Subdivision Name Proposed Lot ____ Block ____ Unit ____ Phase ____

Driving Directions Hwy 90 to 247 S (Branford Hwy), follow to Troy Rd. on (R), follow to end @ Mt. Carmel and turn (R), follow appx. 1/4 mile to 4th drive on (R) - follow into pine trees.

Type of Construction New House - Number of Existing Dwellings on Property 1

Total Acreage 11.5 Lot Size ____ Do you need a - Culvert Permit or Culvert Waiver or Have an Existing Drive

Actual Distance of Structure from Property Lines - Front 120.47' Side 139.74 Side 172.37' Rear 433.76'

Total Building Height 26' Number of Stories 1 Heated Floor Area 2,139 Roof Pitch 7/12

Porch 1157 CARPORT 840 TOTAL 4,136

Application is hereby made to obtain a permit to do work and installations as indicated. I certify that no work or installation has commenced prior to the issuance of a permit and that all work be performed to meet the standards of all laws regulating construction in this jurisdiction.

OWNERS AFFIDAVIT: I hereby certify that all the foregoing information is accurate and all work will be done in compliance with all applicable laws and regulating construction and zoning.

WARNING TO OWNER: YOUR FAILURE TO RECORD A NOTICE OF COMMENCMENT MAY RESULT IN YOU PAYING TWICE FOR IMPROVEMENTS TO YOUR PROPERTY. IF YOU INTEND TO OBTAIN FINANCING, CONSULT WITH YOUR LENDER OR ATTORNEY BEFORE RECORDING YOUR NOTICE OF COMMENCEMENT.

Abby Stalvey
Owner Builder or Agent (Including Contractor)

Contractor Signature
Contractors License Number
Competency Card Number

STATE OF FLORIDA
COUNTY OF COLUMBIA

LAURIE HODSON
MY COMMISSION # DD 333503
EXPIRES: June 28, 2008
Bonded Thru Notary Public Underwriters
NOTARY STAMP/SEAL

Sworn to (or affirmed) and subscribed before me this 24 day of 08 20 05.

Personally known ✓ or Produced Identification ____

Notary Signature

10-21-05 . Talked w/ Abby - 651-36

THIS INSTRUMENT WAS PREPARED BY:

TERRY McDAVID 05-605
POST OFFICE BOX 1328
LAKE CITY, FL 32056-1328

Inst:2005017619 Date:07/25/2005 Time:16:40
Doc Stamp-Deed : 0.70
DC,P.DeWitt Cason,Columbia County B:1052 P:2432

RETURN TO:

TERRY McDAVID
POST OFFICE BOX 1328
LAKE CITY, FL 32056-1328

Property Appraiser's Identification Number 09-4S-16-02520-004

WARRANTY DEED

This Warranty Deed, made this 22nd day of July, 2005, BETWEEN ROBERT L. DORTCH and VELMA L. DORTCH, Husband and Wife, of the County of Columbia, State of Florida, grantor*, and ALLEN M. STALVEY and ABIGAIL M. STALVEY, Husband and Wife whose post office address is 942 SW Mount Carmel Ave., Lake City, FL 32024, of the County of Columbia, State of Florida, grantee*.

(Whenever used herein the terms "grantor" and "grantee" include all the parties to this instrument and the heirs, legal representatives and assigns of individuals, and the successors and assigns of corporations, trusts and trustees)

Witnesseth: that said grantor, for and in consideration of the sum of Ten Dollars ($10.00), and other good and valuable considerations to said grantor in hand paid by said grantee, the receipt whereof is hereby acknowledged, has granted, bargained and sold to the said grantee, and grantee's heirs and assigns forever, the following described land, situate, lying and being in Columbia County, Florida, to-wit:

SEE EXHIBIT "A" ATTACHED HERETO AND MADE A PART HEREOF.

Together with all the tenements, hereditaments and appurtenances thereto belonging or in anywise appertaining.

To Have and to Hold, the same in fee simple forever.

And subject to taxes for the current year and later years and all valid easements and restrictions of record, if any, which are not hereby reimposed; and also subject to any claim, right, title or interest arising from any recorded instrument reserving, conveying, leasing, or otherwise alienating any interest in the oil, gas and other minerals. And grantor does warrant the title to said land and will defend the same against the lawful claims of all persons whomsoever, subject only to the exceptions set forth herein.

In Witness Whereof, grantor has hereunto set grantor's hand and seal the day and year first above written.

Inst:2005017619 Date:07/25/2005 Time:16:40
Doc Stamp-Deed : 0.70
DC,P.DeWitt Cason,Columbia County B:1052 P:2433

Signed, sealed and deliv...
in our presence:

(Signature of First Witness)
KAREN M. WRIGHT
(Typed Name of First Witness)

(Signature of Second Witness)
CRYSTAL BRUNSON
(Typed Name of Second Witness)

(SEAL)
Grantor
ROBERT L. DORTCH
Printed Name

(SEAL)
Grantor
VELMA L. DORTCH
Printed Name

STATE OF Florida
COUNTY OF Columbia

The foregoing instrument was acknowledged before me this 22nd day of July, 2005, by ROBERT L. DORTCH and VELMA L. DORTCH, Husband and Wife who are personally known to me or who have produced F/A Drivers Lic. as identification and who did not take an oath.

My Commission Expires:

Notary Public
Printed, typed, or stamped name:

KAREN M. WRIGHT
Notary Public - State of Florida
My Commission Expires Jan 23, 2008
Commission # DD386234
Bonded By National Notary Assn.

EXHIBIT "A"

TOWNSHIP 4 SOUTH - RANGE 16 EAST

SECTION 9: A part of the W 1/2 of the NE 1/4 of Section 9, Township 4 South, Range 16 East, Columbia County, Florida, more particularly described as follows:

Commence at the Northwest corner of the NE 1/4 of said Section 9 and run N 89 deg. 07'04" E, along the North line thereof, 25.77 feet to the East right-of-way line of Mount Carmel Road; thence S 02 deg. 54'19" E, along said East right-of-way 993.01 feet for Point of Beginning; thence continue S 02 deg. 54'19" E, 121.22 feet; thence S 89 deg. 39'49" E, 202.35 feet; thence S 01 deg. 59'44" E, 311.55 feet; thence N 89 deg. 11'16" E, 1096.99 feet to the East line of the W 1/2 of said NE 1/4; thence N 01 deg. 15'57" W, along said East line of W 1/2 of NE 1/4, 433.76 feet; thence S 89 deg. 13'31" W, 1302.22 feet to the Point of Beginning.

Inst:2005017619 Date:07/25/2005 Time:16:40
Doc Stamp-Deed : 0.70
DC,P.DeWitt Cason,Columbia County B:1052 P:2434

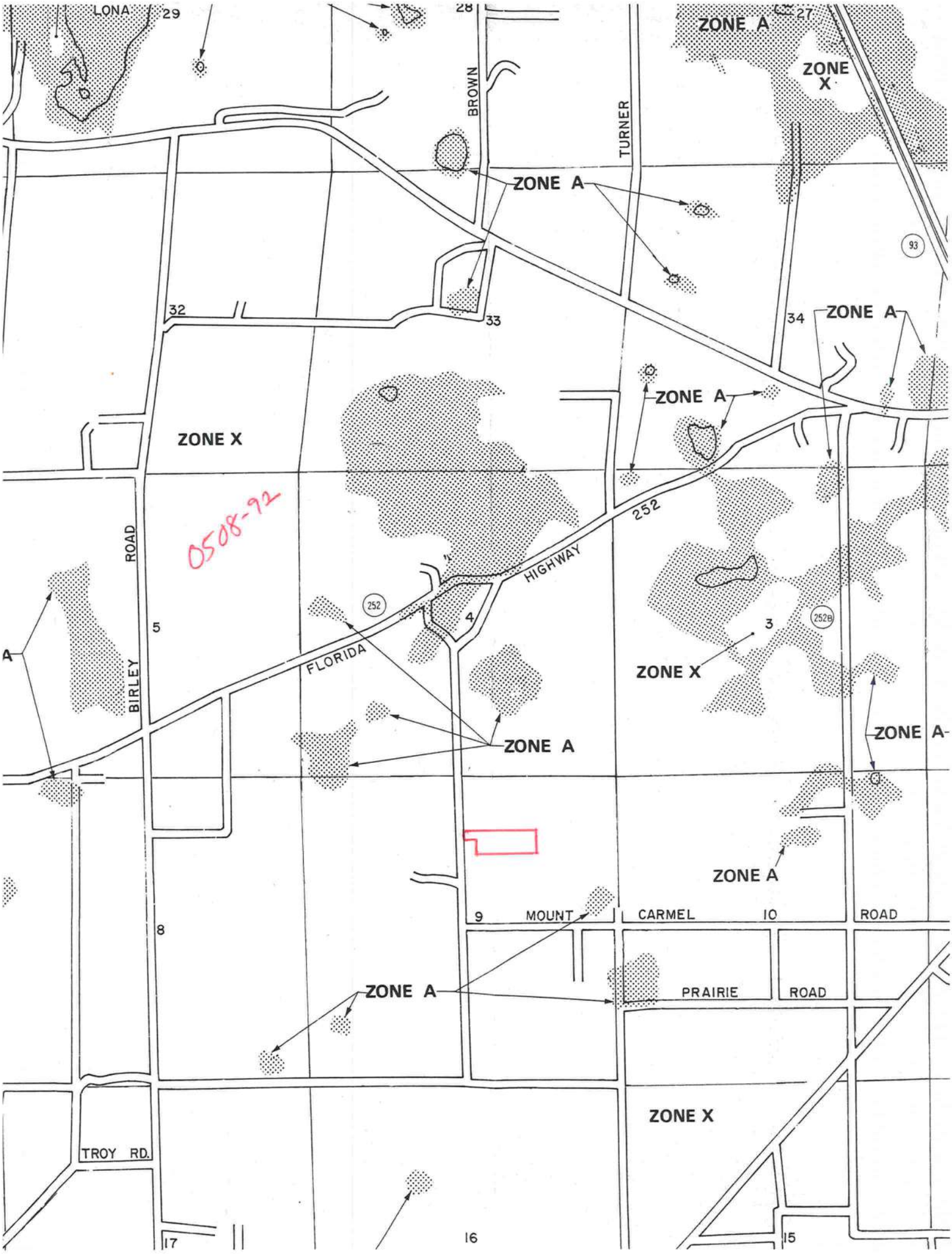
LONA
29
28
27
ZONE A
ZONE X
BROWN
TURNER
ZONE A
93
32
33
34
ZONE A
ZONE A
ZONE X
0508-92
252
HIGHWAY
ROAD
252
4
5
3
252B
FLORIDA
BIRLEY
ZONE X
ZONE A
ZONE A
ZONE A
ZONE A
9
MOUNT
CARMEL
10
ROAD
8
ZONE A
PRAIRIE
ROAD
ZONE X
TROY RD.
17
16
15

THIS INSTRUMENT WAS PREPARED BY:
FIRST FEDERAL SAVINGS BANK OF FLORIDA
4705 WEST U.S. HIGHWAY 90
P.O. BOX 2029
LAKE CITY, FLORIDA 32056

Inst:2005017621 Date:07/25/2005 Time:16:40
DC,P.DeWitt Cason,Columbia County B:1052 P:2449

PERMIT NO._____ TAX FOLIO NO._____

RETURN TO
Terry Osborne
P. O. Box 1328
Lake City, FL 32056-1328

NOTICE OF COMMENCEMENT

STATE OF FLORIDA
COUNTY OF Columbia

The undersigned hereby gives notice that improvement will be made to certain real property, and in accordance with Chapter 713, Florida Statutes, the following information is provided in this Notice of Commencement.

1. Description of property: See Exhibit "A" Attached Hereto

2. General description of improvement: **Construction of Dwelling**

3. Owner information:
   a. Name and address: Allen M. Stalvey and Abigail M. Stalvey
   942 SW Mount Carmel Ave., Lake City, FL 32024

   b. Interest in property: **Fee Simple**

   c. Name and address of fee simple title holder (if other than Owner): **NONE**

4. Contractor (name and address): Allen M. Stalvey
   942 SW Mount Carmel Ave., Lake City, FL 32024

5. Surety:
   a. Name and address: _____

   b. Amount of bond: _____

6. Lender: **FIRST FEDERAL SAVINGS BANK OF FLORIDA**
   4705 WEST U.S. HIGHWAY 90
   P. O. BOX 2029
   LAKE CITY, FLORIDA 32056

7. Persons within the State of Florida designated by Owner upon whom notices or other document may be served as provided by Section 713.13 (1) (a) 7., Florida Statutes: NONE

8. In addition to himself, Owner designates **PAULA HACKER of FIRST FEDERAL SAVINGS BANK OF FLORIDA, 4705 West U.S. Highway 90 / P. O. Box 2029, Lake City, Florida 32056** to receive a copy of the Lienor's Notice as provided in Section 713.13 (1) (b), Florida Statutes.

9. Expiration date of notice of commencement (the expiration date is 1 year from the date of recording unless a different date is specified).

Borrower Name

Abigail M. Stalvey
Co-Borrower Name

The foregoing instrument was acknowledged before me this 22nd day of July 2005 by ALLEN M. & ABIGAIL M. STALVEY, who is personally known to me or who has produced driver's license for identification.

Notary Public
My Commission Expires:

KAREN M. WRIGHT
Notary Public - State of Florida
My Commission Expires Jan 23, 2006
Commission # DD086234
Bonded By National Notary Assn.

STATE OF FLORIDA, COUNTY OF COLUMBIA
I HEREBY CERTIFY, that the above and foregoing is a true copy of the original filed in this office.
P. DeWITT CASON, CLERK OF COURTS
By Gail R Harden
Deputy Clerk
Date July 25, 2005

CLERK CIRCUIT COURT
COLUMBIA COUNTY, FLORIDA

EXHIBIT "A"

TOWNSHIP 4 SOUTH - RANGE 16 EAST

SECTION 9: A part of the W 1/2 of the NE 1/4 of Section 9, Township 4 South, Range 16 East, Columbia County, Florida, more particularly described as follows:

Commence at the Northwest corner of the NE 1/4 of said Section 9 and run N 89 deg. 07'04" E, along the North line thereof, 25.77 feet to the East right-of-way line of Mount Carmel Road; thence S 02 deg. 54'19" E, along said East right-of-way 993.01 feet for Point of Beginning; thence continue S 02 deg. 54'19" E, 121.22 feet; thence S 89 deg. 39'49" E, 202.35 feet; thence S 01 deg. 59'44" E, 311.55 feet; thence N 89 deg. 11'16" E, 1096.99 feet to the East line of the W 1/2 of said NE 1/4; thence N 01 deg. 15'57" W, along said East line of W 1/2 of NE 1/4, 433.76 feet; thence S 89 deg. 13'31" W, 1302.22 feet to the Point of Beginning.

Inst:2005017621 Date:07/25/2005 Time:16:40
_____DC,P.DeWitt Cason,Columbia County B:1052 P:2450

STATE OF FLORIDA
DEPARTMENT OF HEALTH

APPLICATION FOR ONSITE SEWAGE DISPOSAL SYSTEM CONSTRUCTION PERMIT

Permit Application Number 05-1053E

PART II - SITE PLAN

Scale: Each block represents 5 feet and 1 inch = ~~50~~ 100 feet.

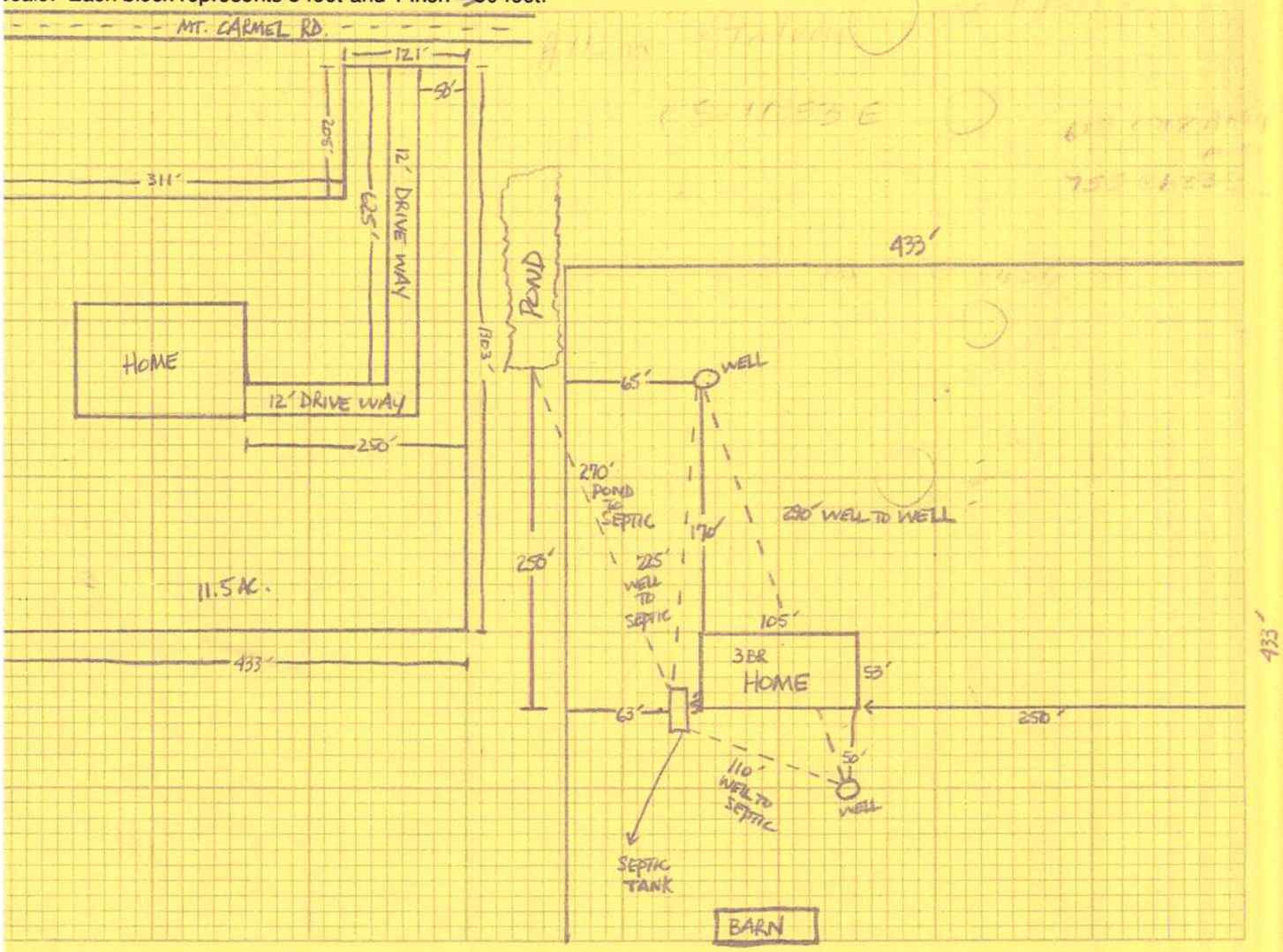

Notes: _____

Site Plan submitted by: A.M. STALVEY JR (Signature) OWNER (Title)

Plan Approved _____ Not Approved _____ Date 10-12-05

By _____ Columbia County Health Department

ALL CHANGES MUST BE APPROVED BY THE COUNTY HEALTH DEPARTMENT

COLUMBIA COUNTY BUILDING DEPARTMENT

RESIDENTIAL MINIMUM PLAN REQUIREMENTS AND CHECKLIST FOR FLORIDA BUILDING CODE 2001
ONE (1) AND TWO (2) FAMILY DWELLINGS

ALL REQUIREMENTS ARE SUBJECT TO CHANGE
EFFECTIVE MARCH 1, 2002

ALL BUILDING PLANS MUST INDICATE THE FOLLOWING ITEMS AND INDICATE COMPLIANCE WITH CHAPTER 1606 OF THE FLORIDA BUILDING CODE 2001 BY PROVIDING CALCULATIONS AND DETAILS THAT HAVE THE SEAL AND SIGNATURE OF A CERTIFIED ARCHITECT OR ENGINEER REGISTERED IN THE STATE OF FLORIDA, OR ALTERNATE METHODOLOGIES, APPROVED BY THE STATE OF FLORIDA BUILDING COMMISSION FOR ONE-AND-TWO FAMILY DWELLINGS. FOR DESIGN PURPOSES THE FOLLOWING BASIC WIND SPEED AS PER FIGURE 1606 SHALL BE USED.

WIND SPEED LINE SHALL BE DEFINED AS FOLLOWS: THE CENTERLINE OF INTERSTATE 75.
1. ALL BUILDINGS CONSTRUCTED EAST OF SAID LINE SHALL BE -------- 100 MPH
2. ALL BUILDINGS CONSTRUCTED WEST OF SAID LINE SHALL BE --------110 MPH
3. NO AREA IN COLUMBIA COUNTY IS IN A WIND BORNE DEBRIS REGION

APPLICANT – PLEASE CHECK ALL APPLICABLE BOXES BEFORE SUBMITTAL

GENERAL REQUIREMENTS; Two (2) complete sets of plans containing the following:

Applicant	Plans Examiner	
☐	☑	All drawings must be clear, concise and drawn to scale ("Optional " details that are not used shall be marked void or crossed off). Square footage of different areas shall be shown on plans.
☐	☑	Designers name and signature on document (FBC 104.2.1). If licensed architect or engineer, official seal shall be affixed.
☐	☑	**Site Plan including:** a) Dimensions of lot b) Dimensions of building set backs c) Location of all other buildings on lot, well and septic tank if applicable, and all utility easements. d) Provide a full legal description of property.
☐	☑	**Wind-load Engineering Summary, calculations and any details required** a) Plans or specifications must state compliance with FBC Section 1606 b) The following information must be shown as per section 1606.1.7 FBC a. Basic wind speed (MPH) b. Wind importance factor (I) and building category c. Wind exposure – if more than one wind exposure is used, the wind exposure and applicable wind direction shall be indicated d. The applicable internal pressure coefficient e. Components and Cladding. The design wind pressure in terms of psf (kN/m²), to be used for the design of exterior component and cladding materials not specifically designed by the registered design professional
☐	☑	**Elevations including:**
☐	☑	a) All sides
☐	☑	b) Roof pitch 7/12
☐	☑	c) Overhang dimensions and detail with attic ventilation
☐	☑	d) Location, size and height above roof of chimneys
☐	☑	e) Location and size of skylights
☐	☑	f) Building height
☐	☑	e) Number of stories 1

Floor Plan including:

☐ ☑ a) Rooms labeled and dimensioned
☐ ☑ b) Shear walls
☐ ☐ c) Windows and doors (including garage doors) showing size, mfg., approval listing and attachment specs. (FBC 1707) and safety glazing where needed (egress windows in bedrooms to be shown)
☐ ☑ d) Fireplaces (gas appliance) (vented or non-vented) or wood burning with hearth
☐ ☑ e) Stairs with dimensions (width, tread and riser) and details of guardrails and handrails
☐ ☐ See NOTE 7 f) Must show and identify accessibility requirements (accessible bathroom)

Foundation Plan including:

☐ ☐ a) Location of all load-bearing wall with required footings indicated as standard Or monolithic and dimensions and reinforcing
☐ ☐ b) All posts and/or column footing including size and reinforcing
☐ ☐ c) Any special support required by soil analysis such as piling
☐ ☐ d) Location of any vertical steel

Roof System:

☐ ☑ See NOTE 8 a) Truss package including:
1. Truss layout and truss details signed and sealed by Fl. Pro. Eng.
2. Roof assembly (FBC 104.2.1 Roofing system, materials, manufacturer, fastening requirements and product evaluation with wind resistance rating)

☐ ☐ b) Conventional Framing Layout including:
1. Rafter size, species and spacing
2. Attachment to wall and uplift
3. Ridge beam sized and valley framing and support details
4. Roof assembly (FBC 104.2.1 Roofing systems, materials, manufacturer, fastening requirements and product evaluation with wind resistance rating)

See NOTE 9

Wall Sections including:

☐ ☐ a) Masonry wall
1. All materials making up wall
2. Block size and mortar type with size and spacing of reinforcement
3. Lintel, tie-beam sizes and reinforcement
4. Gable ends with rake beams showing reinforcement or gable truss and wall bracing details
5. All required connectors with uplift rating and required number and size of fasteners for continuous tie from roof to foundation
6. Roof assembly shown here or on roof system detail (FBC 104.2.1 Roofing system, materials, manufacturer, fastening requirements and product evaluation with resistance rating)
7. Fire resistant construction (if required)
8. Fireproofing requirements
9. Shoe type of termite treatment (termicide or alternative method)
10. Slab on grade
    a. Vapor retardant (6mil. Polyethylene with joints lapped 6 inches and sealed)
    b. Must show control joints, synthetic fiber reinforcement or Welded fire fabric reinforcement and supports
11. Indicate where pressure treated wood will be placed
12. Provide insulation R value for the following:
    a. Attic space
    b. Exterior wall cavity
    c. Crawl space (if applicable)

☐ ☑ **b) Wood frame wall**

1. All materials making up wall
2. Size and species of studs
3. Sheathing size, type and nailing schedule
4. Headers sized
5. Gable end showing balloon framing detail or gable truss and wall hinge bracing detail
6. All required fasteners for continuous tie from roof to foundation (truss anchors, straps, anchor bolts and washers)
7. Roof assembly shown here or on roof system detail (FBC104.2.1 Roofing system, materials, manufacturer, fastening requirements and product evaluation with wind resistance rating)
8. Fire resistant construction (if applicable)
9. Fireproofing requirements
10. Show type of termite treatment (termicide or alternative method)
11. Slab on grade
    a. Vapor retardant (6Mil. Polyethylene with joints lapped 6 inches and sealed
    b. Must show control joints, synthetic fiber reinforcement or welded wire fabric reinforcement and supports
12. Indicate where pressure treated wood will be placed
13. Provide insulation R value for the following:
    a. Attic space
    b. Exterior wall cavity
    c. Crawl space (if applicable)

☐ ☐ c) Metal frame wall and roof (designed, signed and sealed by Florida Prof. Engineer or Architect)

Floor Framing System:

☐ ☐ a) Floor truss package including layout and details, signed and sealed by Florida Registered Professional Engineer

☐ ☐ b) Floor joist size and spacing

☐ ☐ c) Girder size and spacing

☐ ☐ d) Attachment of joist to girder

☐ ☐ e) Wind load requirements where applicable

☐ ☐ **Plumbing Fixture layout**

Electrical layout including:

☐ ☑ a) Switches, outlets/receptacles, lighting and all required GFCI outlets identified

☐ ☑ b) Ceiling fans

☐ ☑ c) Smoke detectors

☐ ☑ d) Service panel and sub-panel size and location(s)

☐ ☑ e) Meter location with type of service entrance (overhead or underground)

☐ ☑ f) Appliances and HVAC equipment

☐ ☑ g) Arc Fault Circuits (AFCI) in bedrooms

HVAC information

☐ ☑ a) Manual J sizing equipment or equivalent computation

☐ ☑ b) Exhaust fans in bathroom

☐ ☐ **Energy Calculations** (dimensions shall match plans)

☐ ☐ **Gas System** Type (LP or Natural) Location and BTU demand of equipment

☐ See Note 4 ☑ **Disclosure Statement for Owner Builders**

☐ ☐ ******Notice Of Commencement Required Before Any Inspections Will Be Done**

☐ ☐ **Private Potable Water**

a) Size of pump motor

b) Size of pressure tank

c) Cycle stop valve if used

THE FOLLOWING ITEMS MUST BE SUBMITTED WITH BUILDING PLANS

1. **Building Permit Application:** A current Building Permit Application form is to be completed and submitted for all residential projects.

2. **Parcel Number:** The parcel number (Tax ID number) from the Property Appraiser (386) 758-1084 is required. A copy of property deed is also requested.

3. **Environmental Health Permit or Sewer Tap Approval:** A copy of the Environmental Health permit, existing septic approval or sewer tap approval is required before a building permit can be issued.
   (386) 758-1058 **(Toilet facilities shall be provided for construction workers)**

4. **City Approval:** If the project is to be located within the city limits of the Town of Fort White, prior approval is required. The Town of Fort White approval letter is required to be submitted by the owner or contractor to this office when applying for a Building Permit. (386) 497-2321

5. **Flood Information:** All projects within the Floodway of the Suwannee or Santa Fe Rivers shall require permitting through the Suwannee River Water Management District, before submitting application to this office. Any project located within a flood zone where the base flood elevation (100 year flood) has been established shall meet the requirements of Section 8.8 of the Columbia County Land Development Regulations. Any project located within a flood zone where the base flood elevation has not been established (Zone A) shall meet the requirements of Section 8.7 of the Columbia County Land Development Regulations. **CERTIFIED FINISHED FLOOR ELEVATIONS WILL BE REQUIRED ON ANY PROJECT WHERE THE BASE FLOOD ELEVATION (100 YEAR FLOOD) HAS BEEN ESTABLISHED.**
   A development permit will also be required. Development permit cost is **$50.00**

6. **Driveway Connection:** If the property does not have an existing access to a public road, then an application for a culvert permit (**$25.00**) must be made. If the applicant feels that a culvert is not needed, they may apply for a culvert waiver (**$50.00**). All culvert waivers are sent to the Columbia County Public Works Department for approval or denial.

7. **911 Address:** If the project is located in an area where the 911 address has been issued, then the proper paperwork from the 911 Addressing Department must be submitted. (386) 752-8787

ALL REQUIRED INFORMATION IS TO BE SUBMITTED FOR REVIEW. YOU WILL BE NOTIFIED WHEN YOUR APPLICATION AND PLANS ARE APPROVED AND READY TO PERMIT. PLEASE DO NOT EXPECT OR REQUEST THAT PERMIT APPLICATIONS BE REVIEWED OR APPROVED WHILE YOU ARE HERE – TIME WILL NOT ALLOW THIS –PLEASE DO NOT ASK

NOTICE:

ADDRESSES BY APPOINTMENT ONLY!

TO OBTAIN A 9-1-1 ADDRESS THE REQUESTER MUST CONTACT THE COLUMBIA COUNTY 9-1-1 ADDRESSING DEPARTMENT AT (386) 752-8787 FOR AN APPOINTMENT TIME AND DATE:

YOU CAN NOT OBTAIN A NEW ADDRESS OVER THE TELEPHONE. MUST MAKE AN APPOINTMENT!

THE ADDRESSING DEPARTMENT IS LOCATED AT 263 NW LAKE CITY AVENUE (OFF OF WEST U.S. HIGHWAY 90 WEST OF INTERSTATE 75 AT THE COLUMBIA COUNTY EMERGENCY OPERATIONS CENTER).

THE REQUESTER WILL NEED THE FOLLOWING:

1. THE PARCEL OR TAX ID NUMBER (SAMPLE: "25-4S-17-12345-123" OR "R12345-123) FOR THE PROPERTY.
2. A PLAT, PLAN, SITE PLAN, OR DRAWING SHOWING THE PROPERTY LINES OF THE PARCEL.
   a. LOCATION OF PLANNED RESIDENT OR BUSINESS STRUCTURE ON THE PROPERTY WITH DISTANCES FROM TWO OF THE PROPERTY LINES TO THE STRUCTURE (SEE SAMPLE BELOW).
   b. LOCATION OF THE ACCESS POINT (DRIVEWAY, ETC.) ON THE ROADWAY FROM WHICH LOCATION IS TO BE ADDRESSED WITH A DISTANCE FROM A PARALLEL PROPERTY LINE AND OR PROPERTY CORNER (SEE SAMPLE BELOW).
   c. TRAVEL OF THE DRIVEWAY FROM THE ACCESS POINT TO THE STRUCTURE (SEE SAMPLE BELOW).

SAMPLE:

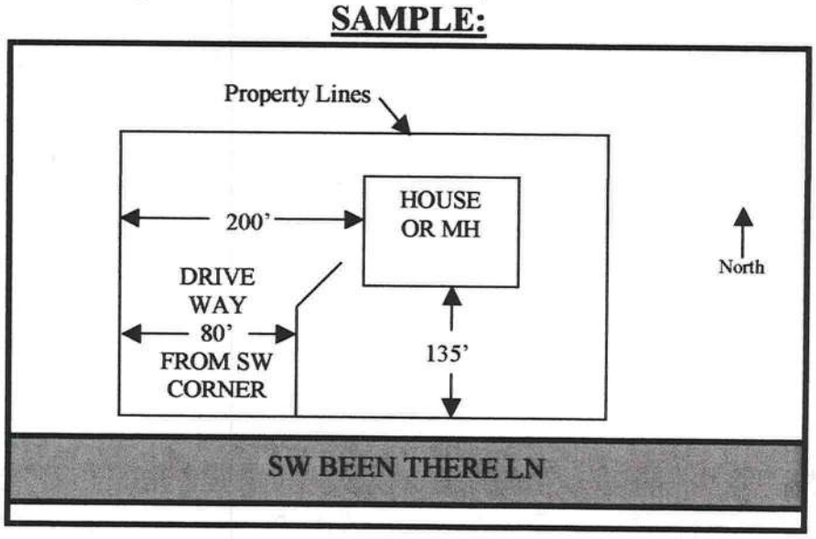

NOTE: 5 TO 7 WORKING DAYS MAY BE REQUIRED IF ADDRESSING DEPARTMENT NEEDS TO CONDUCT AN ON SITE SURVEY.

DISCLOSURE STATEMENT

FOR OWNER/BUILDER WHEN ACTING AS THER OWN CONTRACTOR AND CLAIMING EXEMPTION OF CONTRACTOR LICENSING REQUIREMENTS IN ACCORDANCE WITH FLORIDA STATUTES, ss. 489.103(7).

State law requires construction to be done by licensed contractors. You have applied for a permit under an exemption to that law. The exemption allows you, as the owner of your property, to act as your own contractor with certain restrictions even though you do not have a license. You must provide direct, onsite supervision of the construction yourself. You may build or improve a one-family or two-family residence or a farm outbuilding. You may also build or improve a commercial building, provided your costs do not exceed $25,000. The building or residence must be for your own use or occupancy. It may not be built or substantially improved for sale or lease. If you sell or lease a building you have built or substantially improved yourself within 1 year after the construction is complete, the law will presume that you built or substantially improved it for sale or lease, which is a violation of this exemption. You may not hire an unlicensed person to act as your contractor or to supervise people working on your building. It is your responsibility to make sure that people employed by you have licenses required by state law and by county or municipal licensing ordinances. You may not delegate the responsibility for supervising work to a licensed contractor who is not licensed to perform the work being done. Any person working on your building who is not licensed must work under your direct supervision and must be employed by you, which means that you must deduct F .I.C.A. and withholding tax and provide workers' compensation for that employee, all as prescribed by law. Your construction must comply with all applicable laws, ordinances, building codes, and zoning regulations.

TYPE OF CONSTRUCTION

(X) Single Family Dwelling
( ) Farm Outbuilding
( ) New Construction
( ) Two-Family Residence
( ) Other_____
( ) Addition, Alteration, Modification or other Improvement

NEW CONSTRUCTION OR IMPROVEMENT

I Abby Stalvey **, have been advised of the above disclosure statement for exemption from contractor licensing as an owner/builder. I agree to comply with all requirements provided for in Florida Statutes ss.489.103(7) allowing this exception for the construction permitted by Columbia County Building Permit Number_____**

Abby Stalvey — 8/24/05

Signature — **Date**

FOR BUILDING USE ONLY

I hereby certify that the above listed owner/builder has been notified of the disclosure statement in Florida Statutes ss 489.103(7).

Date 8-24-05 **Building Official/Representative** Daniel Lawson

FORM 600A-2001

FLORIDA ENERGY EFFICIENCY CODE FOR BUILDING CONSTRUCTION

Florida Department of Community Affairs

Residential Whole Building Performance Method A

Project Name:	**Stalvey Residence**	Builder:	
Address:		Permitting Office:	COLUMBIA
City, State:	,	Permit Number:	23782
Owner:		Jurisdiction Number:	221000
Climate Zone:	**South**		

1. New construction or existing		New	
2. Single family or multi-family		Single family	
3. Number of units, if multi-family		1	
4. Number of Bedrooms		3	
5. Is this a worst case?		No	
6. Conditioned floor area (ft²)		2139 ft²	
7. Glass area & type	Single Pane	Double Pane	
a. Clear glass, default U-factor	0.0 ft²	125.2 ft²	
b. Default tint	0.0 ft²	0.0 ft²	
c. Labeled U or SHGC	0.0 ft²	0.0 ft²	
8. Floor types			
a. Slab-On-Grade Edge Insulation		R=0.0, 238.4(p) ft	
b. N/A			
c. N/A			
9. Wall types			
a. Frame, Wood, Exterior		R=13.0, 1907.2 ft²	
b. N/A			
c. N/A			
d. N/A			
e. N/A			
10. Ceiling types			
a. Under Attic		R=30.0, 2352.9 ft²	
b. N/A			
c. N/A			
11. Ducts			
a. Sup: Unc. Ret: Unc. AH: Interior		Sup. R=6.0, 74.4 ft	
b. N/A			

12. Cooling systems		
a. Central Unit	Cap: 48.0 kBtu/hr	
	SEER: 12.00	
b. N/A		
c. N/A		
13. Heating systems		
a. Electric Heat Pump	Cap: 48.0 kBtu/hr	
	HSPF: 7.40	
b. N/A		
c. N/A		
14. Hot water systems		
a. Electric Resistance	Cap: 50.0 gallons	
	EF: 0.90	
b. N/A		
c. Conservation credits (HR-Heat recovery, Solar DHP-Dedicated heat pump)		
15. HVAC credits (CF-Ceiling fan, CV-Cross ventilation, HF-Whole house fan, PT-Programmable Thermostat, MZ-C-Multizone cooling, MZ-H-Multizone heating)	PT, CF,	

Glass/Floor Area: 0.06

Total as-built points: 22977
Total base points: 33809

PASS

I hereby certify that the plans and specifications covered by this calculation are in compliance with the Florida Energy Code.

PREPARED BY: William H. Freeman

DATE: 6/9/05

I hereby certify that this building, as designed, is in compliance with the Florida Energy Code.

OWNER/AGENT: _____

DATE: _____

Review of the plans and specifications covered by this calculation indicates compliance with the Florida Energy Code. Before construction is completed this building will be inspected for compliance with Section 553.908 Florida Statutes.

GREAT SEAL OF THE STATE OF FLORIDA
IN GOD WE TRUST

BUILDING OFFICIAL: _____

DATE: _____

EnergyGauge® (Version: FLRCPB v3.30)

FORM 600A-2001

SUMMER CALCULATIONS

Residential Whole Building Performance Method A - Details

ADDRESS: , , , PERMIT #:

BASE

GLASS TYPES

.18 X Conditioned Floor Area	X BSPM	= Points
.18 2139.0	32.50	12513.2

WALL TYPES	Area	X BSPM	= Points
Adjacent	0.0	0.00	0.0
Exterior	1907.2	2.70	5149.4
Base Total:	**1907.2**		**5149.4**

DOOR TYPES	Area	X BSPM	= Points
Adjacent	0.0	0.00	0.0
Exterior	122.4	6.40	783.4
Base Total:	**122.4**		**783.4**

CEILING TYPES	Area	X BSPM	= Points
Under Attic	2139.0	2.80	5989.2
Base Total:	**2139.0**		**5989.2**

FLOOR TYPES	Area	X BSPM	= Points
Slab	238.4(p)	-20.0	-4768.0
Raised	0.0	0.00	0.0
Base Total:			**-4768.0**

INFILTRATION	Area	X BSPM	= Points
	2139.0	18.79	40191.8

AS-BUILT

Type/SC	Overhang Ornt	Len	Hgt	Area	X SPM	X SOF	= Points
Double, Clear	N	1.5	4.0	9.0	31.93	0.89	254.4
Double, Clear	N	1.5	6.0	15.0	31.93	0.94	450.4
Double, Clear	E	1.5	2.0	8.0	68.60	0.61	334.5
Double, Clear	E	1.5	4.0	6.0	68.60	0.83	340.1
Double, Clear	S	1.5	6.0	60.0	58.45	0.87	3065.7
Double, Clear	W	1.5	2.0	8.0	61.59	0.63	311.0
Double, Clear	W	1.5	4.0	6.0	61.59	0.83	306.7
Double, Clear	W	1.5	5.4	13.2	61.59	0.90	731.0
As-Built Total:				**125.2**			**5793.8**

Type	R-Value	Area	X SPM	= Points
Frame, Wood, Exterior	13.0	1907.2	2.40	4577.3
As-Built Total:		**1907.2**		**4577.3**

Type	Area	X SPM	= Points
Exterior Insulated	102.0	6.40	652.8
Exterior Insulated	20.4	6.40	130.6
As-Built Total:	**122.4**		**783.4**

Type	R-Value	Area	X SPM X SCM	= Points
Under Attic	30.0	2352.9	2.77 X 1.00	6517.5
As-Built Total:		**2352.9**		**6517.5**

Type	R-Value	Area	X SPM	= Points
Slab-On-Grade Edge Insulation	0.0	238.4(p	-20.00	-4768.0
As-Built Total:		**238.4**		**-4768.0**

Area	X SPM	= Points
2139.0	18.79	40191.8

FORM 600A-2001

SUMMER CALCULATIONS

Residential Whole Building Performance Method A - Details

ADDRESS: , , ,	PERMIT #:

BASE				AS-BUILT							
Summer Base Points:			**59859.0**	**Summer As-Built Points:**							**53095.7**
Total Summer Points	X System Multiplier	=	Cooling Points	Total Component	X Cap Ratio	X Duct Multiplier (DM x DSM x AHU)	X System Multiplier	X Credit Multiplier	=	Cooling Points	
59859.0	**0.4266**		**25535.8**	53095.7 **53095.7**	1.000 **1.00**	(1.073 x 1.165 x 0.90) **1.125**	0.284 **0.284**	0.902 **0.902**		15319.6 **15319.6**	

FORM 600A-2001

WINTER CALCULATIONS

Residential Whole Building Performance Method A - Details

ADDRESS: , , , PERMIT #:

BASE

GLASS TYPES

.18 X Conditioned Floor Area	X BWPM	= Points
.18 2139.0	2.36	908.6

WALL TYPES	Area	X BWPM	= Points
Adjacent	0.0	0.00	0.0
Exterior	1907.2	0.60	1144.3
Base Total:	**1907.2**		**1144.3**

DOOR TYPES	Area	X BWPM	= Points
Adjacent	0.0	0.00	0.0
Exterior	122.4	1.80	220.3
Base Total:	**122.4**		**220.3**

CEILING TYPES	Area	X BWPM	= Points
Under Attic	2139.0	0.10	213.9
Base Total:	**2139.0**		**213.9**

FLOOR TYPES	Area	X BWPM	= Points
Slab	238.4(p)	-2.1	-500.6
Raised	0.0	0.00	0.0
Base Total:			**-500.6**

INFILTRATION	Area	X BWPM	= Points
	2139.0	-0.06	-128.3

AS-BUILT

Type/SC	Overhang Ornt	Len	Hgt	Area	X WPM	X WOF	= Points
Double, Clear	N	1.5	4.0	9.0	4.38	0.99	38.8
Double, Clear	N	1.5	6.0	15.0	4.38	0.99	65.1
Double, Clear	E	1.5	2.0	8.0	3.30	1.08	28.5
Double, Clear	E	1.5	4.0	6.0	3.30	1.03	20.5
Double, Clear	S	1.5	6.0	60.0	3.12	1.02	190.5
Double, Clear	W	1.5	2.0	8.0	3.98	1.02	32.4
Double, Clear	W	1.5	4.0	6.0	3.98	1.00	23.9
Double, Clear	W	1.5	5.4	13.2	3.98	1.00	52.4
As-Built Total:				**125.2**			**452.2**

Type	R-Value	Area	X WPM	= Points
Frame, Wood, Exterior	13.0	1907.2	0.60	1144.3
As-Built Total:		**1907.2**		**1144.3**

Type	Area	X WPM	= Points
Exterior Insulated	102.0	1.80	183.6
Exterior Insulated	20.4	1.80	36.7
As-Built Total:	**122.4**		**220.3**

Type	R-Value	Area	X WPM X WCM	= Points
Under Attic	30.0	2352.9	0.10 X 1.00	235.3
As-Built Total:		**2352.9**		**235.3**

Type	R-Value	Area	X WPM	= Points
Slab-On-Grade Edge Insulation	0.0	238.4(p	-2.10	-500.6
As-Built Total:		**238.4**		**-500.6**

	Area	X WPM	= Points
	2139.0	-0.06	-128.3

WINTER CALCULATIONS

Residential Whole Building Performance Method A - Details

ADDRESS: , , ,	PERMIT #:

BASE				AS-BUILT								
Winter Base Points:			**1858.2**	**Winter As-Built Points:**								**1423.2**
Total Winter Points	X	System Multiplier	= Heating Points	Total Component	X	Cap Ratio	X	Duct Multiplier (DM x DSM x AHU)	X	System Multiplier	X	Credit Multiplier	= Heating Points
1858.2		**0.6274**	**1165.8**	1423.2 **1423.2**		1.000 **1.00**		(1.099 x 1.137 x 0.91) **1.137**		0.461 **0.461**		0.950 **0.950**	708.4 **708.4**

FORM 600A-2001

WATER HEATING & CODE COMPLIANCE STATUS

Residential Whole Building Performance Method A - Details

ADDRESS: , , , PERMIT #:

BASE				AS-BUILT							
WATER HEATING											
Number of Bedrooms	X	Multiplier	= Total	Tank Volume	EF	Number of Bedrooms	X Tank Ratio	X Multiplier	X Credit Multiplier	= Total	
3		2369.00	7107.0	50.0	0.90	3	1.00	2316.36	1.00	6949.1	
				As-Built Total:						**6949.1**	

CODE COMPLIANCE STATUS

BASE				AS-BUILT			
Cooling Points +	Heating Points +	Hot Water Points =	Total Points	Cooling Points +	Heating Points +	Hot Water Points =	Total Points
25536	**1166**	**7107**	**33809**	**15320**	**708**	**6949**	**22977**

PASS

Code Compliance Checklist

Residential Whole Building Performance Method A - Details

ADDRESS: , , , PERMIT #:

6A-21 INFILTRATION REDUCTION COMPLIANCE CHECKLIST

COMPONENTS	SECTION	REQUIREMENTS FOR EACH PRACTICE	CHECK
Exterior Windows & Doors	606.1.ABC.1.1	Maximum:.3 cfm/sq.ft. window area; .5 cfm/sq.ft. door area.	
Exterior & Adjacent Walls	606.1.ABC.1.2.1	Caulk, gasket, weatherstrip or seal between: windows/doors & frames, surrounding wall; foundation & wall sole or sill plate; joints between exterior wall panels at corners; utility penetrations; between wall panels & top/bottom plates; between walls and floor. EXCEPTION: Frame walls where a continuous infiltration barrier is installed that extends from, and is sealed to, the foundation to the top plate.	
Floors	606.1.ABC.1.2.2	Penetrations/openings >1/8" sealed unless backed by truss or joint members. EXCEPTION: Frame floors where a continuous infiltration barrier is installed that is sealed to the perimeter, penetrations and seams.	
Ceilings	606.1.ABC.1.2.3	Between walls & ceilings; penetrations of ceiling plane of top floor; around shafts, chases, soffits, chimneys, cabinets sealed to continuous air barrier; gaps in gyp board & top plate; attic access. EXCEPTION: Frame ceilings where a continuous infiltration barrier is installed that is sealed at the perimeter, at penetrations and seams.	
Recessed Lighting Fixtures	606.1.ABC.1.2.4	Type IC rated with no penetrations, sealed; or Type IC or non-IC rated, installed inside a sealed box with 1/2" clearance & 3" from insulation; or Type IC rated with < 2.0 cfm from conditioned space, tested.	
Multi-story Houses	606.1.ABC.1.2.5	Air barrier on perimeter of floor cavity between floors.	
Additional Infiltration reqts	606.1.ABC.1.3	Exhaust fans vented to outdoors, dampers; combustion space heaters comply with NFPA, have combustion air.	

6A-22 OTHER PRESCRIPTIVE MEASURES (must be met or exceeded by all residences.)

COMPONENTS	SECTION	REQUIREMENTS	CHECK
Water Heaters	612.1	Comply with efficiency requirements in Table 6-12. Switch or clearly marked circuit breaker (electric) or cutoff (gas) must be provided. External or built-in heat trap required.	
Swimming Pools & Spas	612.1	Spas & heated pools must have covers (except solar heated). Non-commercial pools must have a pump timer. Gas spa & pool heaters must have a minimum thermal efficiency of 78%.	
Shower heads	612.1	Water flow must be restricted to no more than 2.5 gallons per minute at 80 PSIG.	
Air Distribution Systems	610.1	All ducts, fittings, mechanical equipment and plenum chambers shall be mechanically attached, sealed, insulated, and installed in accordance with the criteria of Section 610. Ducts in unconditioned attics: R-6 min. insulation.	
HVAC Controls	607.1	Separate readily accessible manual or automatic thermostat for each system.	
Insulation	604.1, 602.1	Ceilings-Min. R-19. Common walls-Frame R-11 or CBS R-3 both sides. Common ceiling & floors R-11.	

ENERGY PERFORMANCE LEVEL (EPL) DISPLAY CARD

ESTIMATED ENERGY PERFORMANCE SCORE* = 89.0

The higher the score, the more efficient the home.

1. New construction or existing		New	
2. Single family or multi-family		Single family	
3. Number of units, if multi-family		1	
4. Number of Bedrooms		3	
5. Is this a worst case?		No	
6. Conditioned floor area (ft²)		2139 ft²	
7. Glass area & type	Single Pane	Double Pane	
a. Clear - single pane	0.0 ft²	125.2 ft²	
b. Clear - double pane	0.0 ft²	0.0 ft²	
c. Tint/other SHGC - single pane	0.0 ft²	0.0 ft²	
d. Tint/other SHGC - double pane			
8. Floor types			
a. Slab-On-Grade Edge Insulation		R=0.0, 238.4(p) ft	
b. N/A			
c. N/A			
9. Wall types			
a. Frame, Wood, Exterior		R=13.0, 1907.2 ft²	
b. N/A			
c. N/A			
d. N/A			
e. N/A			
10. Ceiling types			
a. Under Attic		R=30.0, 2352.9 ft²	
b. N/A			
c. N/A			
11. Ducts			
a. Sup: Unc. Ret: Unc. AH: Interior		Sup. R=6.0, 74.4 ft	
b. N/A			

12. Cooling systems		
a. Central Unit	Cap: 48.0 kBtu/hr	
	SEER: 12.00	
b. N/A		
c. N/A		
13. Heating systems		
a. Electric Heat Pump	Cap: 48.0 kBtu/hr	
	HSPF: 7.40	
b. N/A		
c. N/A		
14. Hot water systems		
a. Electric Resistance	Cap: 50.0 gallons	
	EF: 0.90	
b. N/A		
c. Conservation credits (HR-Heat recovery, Solar DHP-Dedicated heat pump)		
15. HVAC credits (CF-Ceiling fan, CV-Cross ventilation, HF-Whole house fan, PT-Programmable Thermostat, MZ-C-Multizone cooling, MZ-H-Multizone heating)	PT, CF,	

I certify that this home has complied with the Florida Energy Efficiency Code For Building Construction through the above energy saving features which will be installed (or exceeded) in this home before final inspection. Otherwise, a new EPL Display Card will be completed based on installed Code compliant features.

Builder Signature: _____ Date: _____

Address of New Home: _____ City/FL Zip: _____

**NOTE: The home's estimated energy performance score is only available through the FLA/RES computer program. This is not a Building Energy Rating. If your score is 80 or greater (or 86 for a US EPA/DOE EnergyStar™ designation), your home may qualify for energy efficiency mortgage (EEM) incentives if you obtain a Florida Energy Gauge Rating. Contact the Energy Gauge Hotline at 321/638-1492 or see the Energy Gauge web site at www.fsec.ucf.edu for information and a list of certified Raters. For information about Florida's Energy Efficiency Code For Building Construction, contact the Department of Community Affairs at 850/487-1824.*

EnergyGauge® (Version: FLRCPB v3.30)

Residential System Sizing Calculation

Summary

Project Title:
Stalvey Residence

Code Only
Professional Version
Climate: South

6/9/2005

Location for weather data: Gainesville - User customized: Latitude(29) Temp Range(M)
Humidity data: Interior RH (50%) Outdoor wet bulb (78F) Humidity difference(51gr.)

Winter design temperature	31	F	Summer design temperature	98	F
Winter setpoint	70	F	Summer setpoint	75	F
Winter temperature difference	39	F	Summer temperature difference	23	F
Total heating load calculation	**29842**	**Btuh**	**Total cooling load calculation**	**27726**	**Btuh**
Submitted heating capacity	% of calc	Btuh	Submitted cooling capacity	% of calc	Btuh
Total (Electric Heat Pump)	160.8	48000	Sensible (SHR = 0.5)	109.0	24000
Heat Pump + Auxiliary(0.0kW)	160.8	48000	Latent	419.9	24000
			Total (Electric Heat Pump)	173.1	48000

WINTER CALCULATIONS

Winter Heating Load (for 2139 sqft)

Load component			Load	
Window total	125	sqft	3543	Btuh
Wall total	1907	sqft	5912	Btuh
Door total	122	sqft	2244	Btuh
Ceiling total	2353	sqft	3059	Btuh
Floor total	238	ft	7533	Btuh
Infiltration	143	cfm	6130	Btuh
Subtotal			**28421**	**Btuh**
Duct loss			1421	Btuh
TOTAL HEAT LOSS			**29842**	**Btuh**

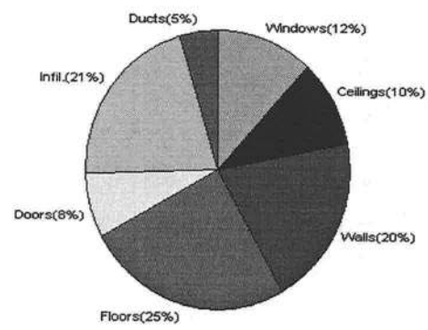

SUMMER CALCULATIONS

Summer Cooling Load (for 2139 sqft)

Load component			Load	
Window total	125	sqft	4567	Btuh
Wall total	1907	sqft	4081	Btuh
Door total	122	sqft	1528	Btuh
Ceiling total	2353	sqft	3671	Btuh
Floor total			0	Btuh
Infiltration	125	cfm	3163	Btuh
Internal gain			3000	Btuh
Subtotal(sensible)			**20009**	**Btuh**
Duct gain			2001	Btuh
Total sensible gain			**22010**	**Btuh**
Latent gain(infiltration)			4336	Btuh
Latent gain(internal)			1380	Btuh
Total latent gain			**5716**	**Btuh**
TOTAL HEAT GAIN			**27726**	**Btuh**

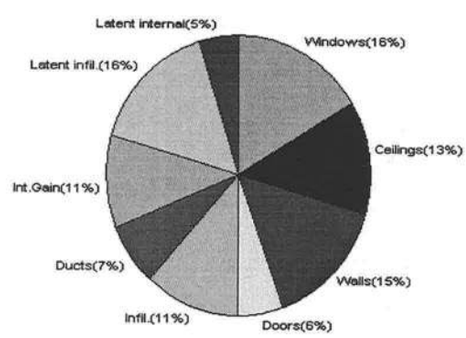

EnergyGauge® System Sizing based on ACCA Manual J.
PREPARED BY: [illegible]
DATE: 6/9/05

EnergyGauge® FLRCPB v3.30

System Sizing Calculations - Winter

Residential Load - Component Details

Project Title:
Stalvey Residence

Code Only
Professional Version
Climate: South

Reference City: Gainesville (User customized) Winter Temperature Difference: 39.0 F 6/9/2005

Window	Panes/SHGC/Frame/U	Orientation	Area X	HTM=	Load
1	2, Clear, Metal, DEF	N	9.0	28.3	255 Btuh
2	2, Clear, Metal, DEF	N	15.0	28.3	424 Btuh
3	2, Clear, Metal, DEF	E	8.0	28.3	226 Btuh
4	2, Clear, Metal, DEF	E	6.0	28.3	170 Btuh
5	2, Clear, Metal, DEF	S	60.0	28.3	1698 Btuh
6	2, Clear, Metal, DEF	W	8.0	28.3	226 Btuh
7	2, Clear, Metal, DEF	W	6.0	28.3	170 Btuh
8	2, Clear, Metal, DEF	W	13.2	28.3	374 Btuh
	Window Total		125		3543 Btuh
Walls	Type	R-Value	Area X	HTM=	Load
1	Frame - Exterior	13.0	1907	3.1	5912 Btuh
	Wall Total		1907		5912 Btuh
Doors	Type		Area X	HTM=	Load
1	Insulated - Exter		102	18.3	1870 Btuh
2	Insulated - Exter		20	18.3	374 Btuh
	Door Total		122		2244Btuh
Ceilings	Type	R-Value	Area X	HTM=	Load
1	Under Attic	30.0	2353	1.3	3059 Btuh
	Ceiling Total		2353		3059Btuh
Floors	Type	R-Value	Size X	HTM=	Load
1	Slab-On-Grade Edge Insul	0	238.4 ft(p)	31.6	7533 Btuh
	Floor Total		238		7533 Btuh
Infiltration	Type	ACH X	Building Volume	CFM=	Load
	Natural	0.40	21390(sqft)	143	6130 Btuh
	Mechanical			0	0 Btuh
	Infiltration Total			143	6130 Btuh

Totals for Heating	**Subtotal**	**28421 Btuh**
	Duct Loss(using duct multiplier of 0.05)	**1421 Btuh**
	Total Btuh Loss	**29842 Btuh**

Key: Window types (SHGC - Shading coefficient of glass as SHGC numerical value or as clear or tint)
(Frame types - metal, wood or insulated metal)
(U - Window U-Factor or 'DEF' for default)
(HTM - ManualJ Heat Transfer Multiplier)
Key: Floor size (perimeter(p) for slab-on-grade or area for all other floor types)

System Sizing Calculations - Summer

Residential Load - Component Details

Project Title:
Stalvey Residence

Code Only
Professional Version
Climate: South

Reference City: Gainesville (User customized) Summer Temperature Difference: 23.0 F 6/9/2005

Window	Type Panes/SHGC/U/InSh/ExSh	Ornt	Overhang Len	Overhang Hgt	Window Area(sqft) Gross	Shaded	Unshaded	HTM Shaded	HTM Unshaded	Load
1	2, Clear, DEF, N, N	N	1.5	4	9.0	0.0	9.0	24	24	216 Btuh
2	2, Clear, DEF, N, N	N	1.5	6	15.0	0.0	15.0	24	24	360 Btuh
3	2, Clear, DEF, N, N	E	1.5	2	8.0	5.0	3.0	24	74	343 Btuh
4	2, Clear, DEF, N, N	E	1.5	4	6.0	0.0	6.0	24	74	444 Btuh
5	2, Clear, DEF, N, N	S	1.5	6	60.0	60.0	0.0	24	39	1440 Btuh
6	2, Clear, DEF, N, N	W	1.5	2	8.0	5.0	3.0	24	74	343 Btuh
7	2, Clear, DEF, N, N	W	1.5	4	6.0	0.0	6.0	24	74	444 Btuh
8	2, Clear, DEF, N, N	W	1.5	5.4	13.2	0.0	13.2	24	74	977 Btuh
	Window Total				125					4567 Btuh

Walls	Type	R-Value	Area	HTM	Load
1	Frame - Exterior	13.0	1907.2	2.1	4081 Btuh
	Wall Total		1907.2		4081 Btuh

Doors	Type	Area	HTM	Load
1	Insulated - Exter	102.0	12.5	1273 Btuh
2	Insulated - Exter	20.4	12.5	255 Btuh
	Door Total	122.4		1528 Btuh

Ceilings	Type/Color	R-Value	Area	HTM	Load
1	Under Attic/Dark	30.0	2352.9	1.6	3671 Btuh
	Ceiling Total		2352.9		3671 Btuh

Floors	Type	R-Value	Size	HTM	Load
1	Slab-On-Grade Edge Insulation	0.0	238.4 ft(p)	0.0	0 Btuh
	Floor Total		238.4		0 Btuh

Infiltration	Type	ACH	Volume	CFM=	Load
	Natural	0.35	21390	125.0	3163 Btuh
	Mechanical			0	0 Btuh
	Infiltration Total			125	3163 Btuh

Internal gain	Occupants		Btuh/occupant		Appliance	Load
	6	X	300	+	1200	3000 Btuh

Totals for Cooling	**Subtotal**	**20009 Btuh**
	Duct gain(using duct multiplier of 0.10)	**2001 Btuh**
	Total sensible gain	**22010 Btuh**
	Latent infiltration gain (for 51 gr. humidity difference)	**4336 Btuh**
	Latent occupant gain (6 people @ 230 Btuh per person)	**1380 Btuh**
	Latent other gain	**0 Btuh**
	TOTAL GAIN	**27726 Btuh**

Manual J Summer Calculations

Residential Load - Component Details (continued)

Project Title:
Stalvey Residence

Code Only
Professional Version
Climate: South

6/9/2005

Key: Window types (SHGC - Shading coefficient of glass as SHGC numerical value or as clear or tint)
(U - Window U-Factor or 'DEF' for default)
(InSh - Interior shading device: none(N), Blinds/Daperies(B) or Roller Shades(R))
(ExSh - Exterior shading device: none(N) or numerical value)
(Ornt - compass orientation)

FORM 600A-2001

FLORIDA ENERGY EFFICIENCY CODE FOR BUILDING CONSTRUCTION

Florida Department of Community Affairs

Residential Whole Building Performance Method A

Project Name:	**Stalvey Residence**	Builder:	
Address:		Permitting Office:	
City, State:	,	Permit Number:	
Owner:		Jurisdiction Number:	
Climate Zone:	**South**		

1. New construction or existing		New	__
2. Single family or multi-family		Single family	__
3. Number of units, if multi-family		1	__
4. Number of Bedrooms		3	__
5. Is this a worst case?		No	__
6. Conditioned floor area (ft²)		2139 ft²	
7. Glass area & type	Single Pane	Double Pane	__
a. Clear glass, default U-factor	0.0 ft²	125.2 ft²	__
b. Default tint	0.0 ft²	0.0 ft²	__
c. Labeled U or SHGC	0.0 ft²	0.0 ft²	
8. Floor types			__
a. Slab-On-Grade Edge Insulation		R=0.0, 238.4(p) ft	__
b. N/A			__
c. N/A			
9. Wall types			__
a. Frame, Wood, Exterior		R=13.0, 1907.2 ft²	__
b. N/A			__
c. N/A			__
d. N/A			__
e. N/A			
10. Ceiling types			__
a. Under Attic		R=30.0, 2352.9 ft²	__
b. N/A			__
c. N/A			
11. Ducts			__
a. Sup: Unc. Ret: Unc. AH: Interior		Sup. R=6.0, 74.4 ft	__
b. N/A			

12. Cooling systems		
a. Central Unit	Cap: 48.0 kBtu/hr	__
	SEER: 12.00	__
b. N/A		__
		__
c. N/A		__
		__
13. Heating systems		
a. Electric Heat Pump	Cap: 48.0 kBtu/hr	__
	HSPF: 7.40	__
b. N/A		__
		__
c. N/A		__
		__
14. Hot water systems		
a. Electric Resistance	Cap: 50.0 gallons	__
	EF: 0.90	__
b. N/A		__
		__
c. Conservation credits (HR-Heat recovery, Solar DHP-Dedicated heat pump)		__
15. HVAC credits (CF-Ceiling fan, CV-Cross ventilation, HF-Whole house fan, PT-Programmable Thermostat, MZ-C-Multizone cooling, MZ-H-Multizone heating)	PT, CF,	__

Glass/Floor Area: 0.06

Total as-built points: 22977
Total base points: 33809

PASS

I hereby certify that the plans and specifications covered by this calculation are in compliance with the Florida Energy Code.

PREPARED BY: William H. Freeman

DATE: 6/8/05

I hereby certify that this building, as designed, is in compliance with the Florida Energy Code.

OWNER/AGENT: _____

DATE: _____

Review of the plans and specifications covered by this calculation indicates compliance with the Florida Energy Code. Before construction is completed this building will be inspected for compliance with Section 553.908 Florida Statutes.

GREAT SEAL OF THE STATE OF FLORIDA
IN GOD WE TRUST

BUILDING OFFICIAL: _____

DATE: _____

FORM 600A-2001

SUMMER CALCULATIONS

Residential Whole Building Performance Method A - Details

ADDRESS: , , , PERMIT #:

BASE

GLASS TYPES

.18 X	Conditioned Floor Area	X BSPM	= Points
.18	2139.0	32.50	12513.2

WALL TYPES	Area	X BSPM	= Points
Adjacent	0.0	0.00	0.0
Exterior	1907.2	2.70	5149.4
Base Total:	**1907.2**		**5149.4**

DOOR TYPES	Area	X BSPM	= Points
Adjacent	0.0	0.00	0.0
Exterior	122.4	6.40	783.4
Base Total:	**122.4**		**783.4**

CEILING TYPES	Area	X BSPM	= Points
Under Attic	2139.0	2.80	5989.2
Base Total:	**2139.0**		**5989.2**

FLOOR TYPES	Area	X BSPM	= Points
Slab	238.4(p)	-20.0	-4768.0
Raised	0.0	0.00	0.0
Base Total:			**-4768.0**

INFILTRATION	Area	X BSPM	= Points
	2139.0	18.79	40191.8

AS-BUILT

Type/SC	Overhang Ornt	Len	Hgt	Area	X SPM	X SOF	= Points
Double, Clear	N	1.5	4.0	9.0	31.93	0.89	254.4
Double, Clear	N	1.5	6.0	15.0	31.93	0.94	450.4
Double, Clear	E	1.5	2.0	8.0	68.60	0.61	334.5
Double, Clear	E	1.5	4.0	6.0	68.60	0.83	340.1
Double, Clear	S	1.5	6.0	60.0	58.45	0.87	3065.7
Double, Clear	W	1.5	2.0	8.0	61.59	0.63	311.0
Double, Clear	W	1.5	4.0	6.0	61.59	0.83	306.7
Double, Clear	W	1.5	5.4	13.2	61.59	0.90	731.0
As-Built Total:				**125.2**			**5793.8**

Type	R-Value	Area	X SPM	= Points
Frame, Wood, Exterior	13.0	1907.2	2.40	4577.3
As-Built Total:		**1907.2**		**4577.3**

Type	Area	X SPM	= Points
Exterior Insulated	102.0	6.40	652.8
Exterior Insulated	20.4	6.40	130.6
As-Built Total:	**122.4**		**783.4**

Type	R-Value	Area	X SPM X SCM	= Points
Under Attic	30.0	2352.9	2.77 X 1.00	6517.5
As-Built Total:		**2352.9**		**6517.5**

Type	R-Value	Area	X SPM	= Points
Slab-On-Grade Edge Insulation	0.0	238.4(p	-20.00	-4768.0
As-Built Total:		**238.4**		**-4768.0**

Area	X SPM	= Points
2139.0	18.79	40191.8

FORM 600A-2001

SUMMER CALCULATIONS

Residential Whole Building Performance Method A - Details

ADDRESS: , , ,	PERMIT #:

BASE				AS-BUILT							
Summer Base Points:			**59859.0**	**Summer As-Built Points:**							**53095.7**
Total Summer Points	X System Multiplier	=	Cooling Points	Total Component	X Cap Ratio	X Duct Multiplier (DM x DSM x AHU)	X System Multiplier	X Credit Multiplier	=	Cooling Points	
59859.0	**0.4266**		**25535.8**	53095.7 **53095.7**	1.000 **1.00**	(1.073 x 1.165 x 0.90) **1.125**	0.284 **0.284**	0.902 **0.902**		15319.6 **15319.6**	

FORM 600A-2001

WINTER CALCULATIONS

Residential Whole Building Performance Method A - Details

ADDRESS: , , , PERMIT #:

BASE

GLASS TYPES .18 X Conditioned Floor Area	X BWPM	= Points
.18 2139.0	2.36	908.6

WALL TYPES	Area X	BWPM =	Points
Adjacent	0.0	0.00	0.0
Exterior	1907.2	0.60	1144.3
Base Total:	**1907.2**		**1144.3**

DOOR TYPES	Area X	BWPM =	Points
Adjacent	0.0	0.00	0.0
Exterior	122.4	1.80	220.3
Base Total:	**122.4**		**220.3**

CEILING TYPES	Area X	BWPM =	Points
Under Attic	2139.0	0.10	213.9
Base Total:	**2139.0**		**213.9**

FLOOR TYPES	Area X	BWPM =	Points
Slab	238.4(p)	-2.1	-500.6
Raised	0.0	0.00	0.0
Base Total:			**-500.6**

INFILTRATION	Area X	BWPM =	Points
	2139.0	-0.06	-128.3

AS-BUILT

Type/SC	Overhang Ornt	Len	Hgt	Area X	WPM X	WOF =	Points
Double, Clear	N	1.5	4.0	9.0	4.38	0.99	38.8
Double, Clear	N	1.5	6.0	15.0	4.38	0.99	65.1
Double, Clear	E	1.5	2.0	8.0	3.30	1.08	28.5
Double, Clear	E	1.5	4.0	6.0	3.30	1.03	20.5
Double, Clear	S	1.5	6.0	60.0	3.12	1.02	190.5
Double, Clear	W	1.5	2.0	8.0	3.98	1.02	32.4
Double, Clear	W	1.5	4.0	6.0	3.98	1.00	23.9
Double, Clear	W	1.5	5.4	13.2	3.98	1.00	52.4
As-Built Total:				**125.2**			**452.2**

Type	R-Value	Area X	WPM =	Points
Frame, Wood, Exterior	13.0	1907.2	0.60	1144.3
As-Built Total:		**1907.2**		**1144.3**

Type	Area X	WPM =	Points
Exterior Insulated	102.0	1.80	183.6
Exterior Insulated	20.4	1.80	36.7
As-Built Total:	**122.4**		**220.3**

Type	R-Value	Area X	WPM X WCM =	Points
Under Attic	30.0	2352.9	0.10 X 1.00	235.3
As-Built Total:		**2352.9**		**235.3**

Type	R-Value	Area X	WPM =	Points
Slab-On-Grade Edge Insulation	0.0	238.4(p	-2.10	-500.6
As-Built Total:		**238.4**		**-500.6**

Area X	WPM =	Points
2139.0	-0.06	-128.3

FORM 600A-2001

WINTER CALCULATIONS

Residential Whole Building Performance Method A - Details

ADDRESS: , , ,	PERMIT #:

BASE				AS-BUILT							
Winter Base Points:			**1858.2**	**Winter As-Built Points:**							**1423.2**
Total Winter Points	X System Multiplier	=	Heating Points	Total Component	X Cap Ratio	X Duct Multiplier (DM x DSM x AHU)	X System Multiplier	X Credit Multiplier	=	Heating Points	
1858.2	**0.6274**		**1165.8**	1423.2 **1423.2**	1.000 **1.00**	(1.099 x 1.137 x 0.91) **1.137**	0.461 **0.461**	0.950 **0.950**		708.4 **708.4**	

Code Compliance Checklist

Residential Whole Building Performance Method A - Details

ADDRESS: , , , PERMIT #:

6A-21 INFILTRATION REDUCTION COMPLIANCE CHECKLIST

COMPONENTS	SECTION	REQUIREMENTS FOR EACH PRACTICE	CHECK
Exterior Windows & Doors	606.1.ABC.1.1	Maximum:.3 cfm/sq.ft. window area; .5 cfm/sq.ft. door area.	
Exterior & Adjacent Walls	606.1.ABC.1.2.1	Caulk, gasket, weatherstrip or seal between: windows/doors & frames, surrounding wall; foundation & wall sole or sill plate; joints between exterior wall panels at corners; utility penetrations; between wall panels & top/bottom plates; between walls and floor. EXCEPTION: Frame walls where a continuous infiltration barrier is installed that extends from, and is sealed to, the foundation to the top plate.	
Floors	606.1.ABC.1.2.2	Penetrations/openings >1/8" sealed unless backed by truss or joint members. EXCEPTION: Frame floors where a continuous infiltration barrier is installed that is sealed to the perimeter, penetrations and seams.	
Ceilings	606.1.ABC.1.2.3	Between walls & ceilings; penetrations of ceiling plane of top floor; around shafts, chases, soffits, chimneys, cabinets sealed to continuous air barrier; gaps in gyp board & top plate; attic access. EXCEPTION: Frame ceilings where a continuous infiltration barrier is installed that is sealed at the perimeter, at penetrations and seams.	
Recessed Lighting Fixtures	606.1.ABC.1.2.4	Type IC rated with no penetrations, sealed; or Type IC or non-IC rated, installed inside a sealed box with 1/2" clearance & 3" from insulation; or Type IC rated with < 2.0 cfm from conditioned space, tested.	
Multi-story Houses	606.1.ABC.1.2.5	Air barrier on perimeter of floor cavity between floors.	
Additional Infiltration reqts	606.1.ABC.1.3	Exhaust fans vented to outdoors, dampers; combustion space heaters comply with NFPA, have combustion air.	

6A-22 OTHER PRESCRIPTIVE MEASURES (must be met or exceeded by all residences.)

COMPONENTS	SECTION	REQUIREMENTS	CHECK
Water Heaters	612.1	Comply with efficiency requirements in Table 6-12. Switch or clearly marked circuit breaker (electric) or cutoff (gas) must be provided. External or built-in heat trap required.	
Swimming Pools & Spas	612.1	Spas & heated pools must have covers (except solar heated). Non-commercial pools must have a pump timer. Gas spa & pool heaters must have a minimum thermal efficiency of 78%.	
Shower heads	612.1	Water flow must be restricted to no more than 2.5 gallons per minute at 80 PSIG.	
Air Distribution Systems	610.1	All ducts, fittings, mechanical equipment and plenum chambers shall be mechanically attached, sealed, insulated, and installed in accordance with the criteria of Section 610. Ducts in unconditioned attics: R-6 min. insulation.	
HVAC Controls	607.1	Separate readily accessible manual or automatic thermostat for each system.	
Insulation	604.1, 602.1	Ceilings-Min. R-19. Common walls-Frame R-11 or CBS R-3 both sides. Common ceiling & floors R-11.	

ENERGY PERFORMANCE LEVEL (EPL) DISPLAY CARD

ESTIMATED ENERGY PERFORMANCE SCORE* = 89.0

The higher the score, the more efficient the home.

1. New construction or existing		New	
2. Single family or multi-family		Single family	
3. Number of units, if multi-family		1	
4. Number of Bedrooms		3	
5. Is this a worst case?		No	
6. Conditioned floor area (ft²)		2139 ft²	
7. Glass area & type	Single Pane	Double Pane	
a. Clear - single pane	0.0 ft²	125.2 ft²	
b. Clear - double pane	0.0 ft²	0.0 ft²	
c. Tint/other SHGC - single pane	0.0 ft²	0.0 ft²	
d. Tint/other SHGC - double pane			
8. Floor types			
a. Slab-On-Grade Edge Insulation		R=0.0, 238.4(p) ft	
b. N/A			
c. N/A			
9. Wall types			
a. Frame, Wood, Exterior		R=13.0, 1907.2 ft²	
b. N/A			
c. N/A			
d. N/A			
e. N/A			
10. Ceiling types			
a. Under Attic		R=30.0, 2352.9 ft²	
b. N/A			
c. N/A			
11. Ducts			
a. Sup: Unc. Ret: Unc. AH: Interior		Sup. R=6.0, 74.4 ft	
b. N/A			

12. Cooling systems		
a. Central Unit	Cap: 48.0 kBtu/hr	
	SEER: 12.00	
b. N/A		
c. N/A		
13. Heating systems		
a. Electric Heat Pump	Cap: 48.0 kBtu/hr	
	HSPF: 7.40	
b. N/A		
c. N/A		
14. Hot water systems		
a. Electric Resistance	Cap: 50.0 gallons	
	EF: 0.90	
b. N/A		
c. Conservation credits (HR-Heat recovery, Solar DHP-Dedicated heat pump)		
15. HVAC credits (CF-Ceiling fan, CV-Cross ventilation, HF-Whole house fan, PT-Programmable Thermostat, MZ-C-Multizone cooling, MZ-H-Multizone heating)	PT, CF,	

I certify that this home has complied with the Florida Energy Efficiency Code For Building Construction through the above energy saving features which will be installed (or exceeded) in this home before final inspection. Otherwise, a new EPL Display Card will be completed based on installed Code compliant features.

Builder Signature: _____ Date: _____

Address of New Home: _____ City/FL Zip: _____

**NOTE: The home's estimated energy performance score is only available through the FLA/RES computer program. This is not a Building Energy Rating. If your score is 80 or greater (or 86 for a US EPA/DOE EnergyStar™ designation), your home may qualify for energy efficiency mortgage (EEM) incentives if you obtain a Florida Energy Gauge Rating. Contact the Energy Gauge Hotline at 321/638-1492 or see the Energy Gauge web site at www.fsec.ucf.edu for information and a list of certified Raters. For information about Florida's Energy Efficiency Code For Building Construction, contact the Department of Community Affairs at 850/487-1824.*

EnergyGauge® (Version: FLRCPB v3.30)

Residential System Sizing Calculation

Summary

Project Title:
Stalvey Residence

Code Only
Professional Version
Climate: South

6/9/2005

Location for weather data: Gainesville - User customized: Latitude(29) Temp Range(M)
Humidity data: Interior RH (50%) Outdoor wet bulb (78F) Humidity difference(51gr.)

Winter design temperature	31	F	Summer design temperature	98	F
Winter setpoint	70	F	Summer setpoint	75	F
Winter temperature difference	39	F	Summer temperature difference	23	F
Total heating load calculation	**29842**	**Btuh**	**Total cooling load calculation**	**27726**	**Btuh**
Submitted heating capacity	% of calc	Btuh	Submitted cooling capacity	% of calc	Btuh
Total (Electric Heat Pump)	160.8	48000	Sensible (SHR = 0.5)	109.0	24000
Heat Pump + Auxiliary(0.0kW)	160.8	48000	Latent	419.9	24000
			Total (Electric Heat Pump)	173.1	48000

WINTER CALCULATIONS

Winter Heating Load (for 2139 sqft)

Load component			Load	
Window total	125	sqft	3543	Btuh
Wall total	1907	sqft	5912	Btuh
Door total	122	sqft	2244	Btuh
Ceiling total	2353	sqft	3059	Btuh
Floor total	238	ft	7533	Btuh
Infiltration	143	cfm	6130	Btuh
Subtotal			**28421**	**Btuh**
Duct loss			1421	Btuh
TOTAL HEAT LOSS			**29842**	**Btuh**

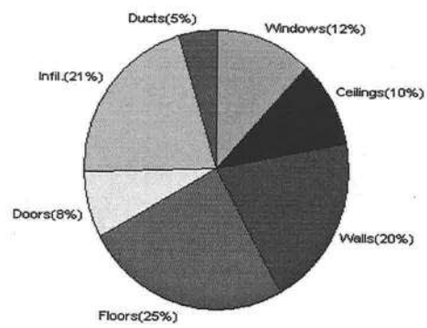

SUMMER CALCULATIONS

Summer Cooling Load (for 2139 sqft)

Load component			Load	
Window total	125	sqft	4567	Btuh
Wall total	1907	sqft	4081	Btuh
Door total	122	sqft	1528	Btuh
Ceiling total	2353	sqft	3671	Btuh
Floor total			0	Btuh
Infiltration	125	cfm	3163	Btuh
Internal gain			3000	Btuh
Subtotal(sensible)			**20009**	**Btuh**
Duct gain			2001	Btuh
Total sensible gain			**22010**	**Btuh**
Latent gain(infiltration)			4336	Btuh
Latent gain(internal)			1380	Btuh
Total latent gain			**5716**	**Btuh**
TOTAL HEAT GAIN			**27726**	**Btuh**

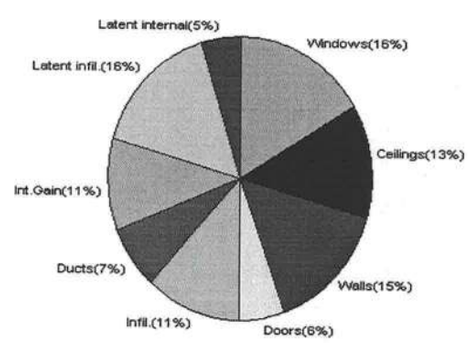

EnergyGauge® System Sizing based on ACCA Manual J.
PREPARED BY: [illegible]
DATE: 6/9/05

EnergyGauge® FLRCPB v3.30

System Sizing Calculations - Winter

Residential Load - Component Details

Project Title:
Stalvey Residence

Code Only
Professional Version
Climate: South

Reference City: Gainesville (User customized) Winter Temperature Difference: 39.0 F

6/9/2005

Window	Panes/SHGC/Frame/U	Orientation	Area X	HTM=	Load
1	2, Clear, Metal, DEF	N	9.0	28.3	255 Btuh
2	2, Clear, Metal, DEF	N	15.0	28.3	424 Btuh
3	2, Clear, Metal, DEF	E	8.0	28.3	226 Btuh
4	2, Clear, Metal, DEF	E	6.0	28.3	170 Btuh
5	2, Clear, Metal, DEF	S	60.0	28.3	1698 Btuh
6	2, Clear, Metal, DEF	W	8.0	28.3	226 Btuh
7	2, Clear, Metal, DEF	W	6.0	28.3	170 Btuh
8	2, Clear, Metal, DEF	W	13.2	28.3	374 Btuh
	Window Total		125		3543 Btuh
Walls	Type	R-Value	Area X	HTM=	Load
1	Frame - Exterior	13.0	1907	3.1	5912 Btuh
	Wall Total		1907		5912 Btuh
Doors	Type		Area X	HTM=	Load
1	Insulated - Exter		102	18.3	1870 Btuh
2	Insulated - Exter		20	18.3	374 Btuh
	Door Total		122		2244Btuh
Ceilings	Type	R-Value	Area X	HTM=	Load
1	Under Attic	30.0	2353	1.3	3059 Btuh
	Ceiling Total		2353		3059Btuh
Floors	Type	R-Value	Size X	HTM=	Load
1	Slab-On-Grade Edge Insul	0	238.4 ft(p)	31.6	7533 Btuh
	Floor Total		238		7533 Btuh
Infiltration	Type	ACH X	Building Volume	CFM=	Load
	Natural	0.40	21390(sqft)	143	6130 Btuh
	Mechanical			0	0 Btuh
	Infiltration Total			143	6130 Btuh

Totals for Heating	**Subtotal**	**28421 Btuh**
	Duct Loss(using duct multiplier of 0.05)	**1421 Btuh**
	Total Btuh Loss	**29842 Btuh**

Key: Window types (SHGC - Shading coefficient of glass as SHGC numerical value or as clear or tint)
(Frame types - metal, wood or insulated metal)
(U - Window U-Factor or 'DEF' for default)
(HTM - ManualJ Heat Transfer Multiplier)

Key: Floor size (perimeter(p) for slab-on-grade or area for all other floor types)

System Sizing Calculations - Summer

Residential Load - Component Details

Project Title:
Stalvey Residence

Code Only
Professional Version
Climate: South

Reference City: Gainesville (User customized) Summer Temperature Difference: 23.0 F 6/9/2005

Window	Type Panes/SHGC/U/InSh/ExSh	Ornt	Overhang Len	Overhang Hgt	Window Area(sqft) Gross	Shaded	Unshaded	HTM Shaded	HTM Unshaded	Load
1	2, Clear, DEF, N, N	N	1.5	4	9.0	0.0	9.0	24	24	216 Btuh
2	2, Clear, DEF, N, N	N	1.5	6	15.0	0.0	15.0	24	24	360 Btuh
3	2, Clear, DEF, N, N	E	1.5	2	8.0	5.0	3.0	24	74	343 Btuh
4	2, Clear, DEF, N, N	E	1.5	4	6.0	0.0	6.0	24	74	444 Btuh
5	2, Clear, DEF, N, N	S	1.5	6	60.0	60.0	0.0	24	39	1440 Btuh
6	2, Clear, DEF, N, N	W	1.5	2	8.0	5.0	3.0	24	74	343 Btuh
7	2, Clear, DEF, N, N	W	1.5	4	6.0	0.0	6.0	24	74	444 Btuh
8	2, Clear, DEF, N, N	W	1.5	5.4	13.2	0.0	13.2	24	74	977 Btuh
	Window Total				125					4567 Btuh

Walls	Type	R-Value	Area	HTM	Load
1	Frame - Exterior	13.0	1907.2	2.1	4081 Btuh
	Wall Total		1907.2		4081 Btuh

Doors	Type	Area	HTM	Load
1	Insulated - Exter	102.0	12.5	1273 Btuh
2	Insulated - Exter	20.4	12.5	255 Btuh
	Door Total	122.4		1528 Btuh

Ceilings	Type/Color	R-Value	Area	HTM	Load
1	Under Attic/Dark	30.0	2352.9	1.6	3671 Btuh
	Ceiling Total		2352.9		3671 Btuh

Floors	Type	R-Value	Size	HTM	Load
1	Slab-On-Grade Edge Insulation	0.0	238.4 ft(p)	0.0	0 Btuh
	Floor Total		238.4		0 Btuh

Infiltration	Type	ACH	Volume	CFM=	Load
	Natural	0.35	21390	125.0	3163 Btuh
	Mechanical			0	0 Btuh
	Infiltration Total			125	3163 Btuh

Internal gain	Occupants		Btuh/occupant		Appliance	Load
	6	X	300	+	1200	3000 Btuh

Totals for Cooling	**Subtotal**	**20009 Btuh**
	Duct gain(using duct multiplier of 0.10)	**2001 Btuh**
	Total sensible gain	**22010 Btuh**
	Latent infiltration gain (for 51 gr. humidity difference)	**4336 Btuh**
	Latent occupant gain (6 people @ 230 Btuh per person)	**1380 Btuh**
	Latent other gain	**0 Btuh**
	TOTAL GAIN	**27726 Btuh**

Manual J Summer Calculations

Residential Load - Component Details (continued)

Project Title:
Stalvey Residence

Code Only
Professional Version
Climate: South

6/9/2005

Key: Window types (SHGC - Shading coefficient of glass as SHGC numerical value or as clear or tint)
(U - Window U-Factor or 'DEF' for default)
(InSh - Interior shading device: none(N), Blinds/Daperies(B) or Roller Shades(R))
(ExSh - Exterior shading device: none(N) or numerical value)
(Ornt - compass orientation)

MIAMI-DADE

BUILDING CODE COMPLIANCE OFFICE (BCCO)
PRODUCT CONTROL DIVISION

MIAMI-DADE COUNTY, FLORIDA
METRO-DADE FLAGLER BUILDING
140 WEST FLAGLER STREET, SUITE 1603
MIAMI, FLORIDA 33130-1563
(305) 375-2901 FAX (305) 375-2908

NOTICE OF ACCEPTANCE (NOA)

Ceco Door Products
9159 Telecom Drive
Milan, TN 38358

In Swing

SCOPE:

This NOA is being issued under the applicable rules and regulations governing the use of construction materials. The documentation submitted has been reviewed by Miami-Dade County Product Control Division and accepted by the Board of Rules and Appeals (BORA) to be used in Miami Dade County and other areas where allowed by the Authority Having Jurisdiction (AHJ).

This NOA shall not be valid after the expiration date stated below. The Miami-Dade County Product Control Division (In Miami Dade County) and/or the AHJ (in areas other than Miami Dade County) reserve the right to have this product or material tested for quality assurance purposes. If this product or material fails to perform in the accepted manner, the manufacturer will incur the expense of such testing and the AHJ may immediately revoke, modify, or suspend the use of such product or material within their jurisdiction. BORA reserves the right to revoke this acceptance, if it is determined by Miami-Dade County Product Control Division that this product or material fails to meet the requirements of the applicable building code.

This product is approved as described herein, and has been designed to comply with the High Velocity Hurricane Zone of the Florida Building Code.

DESCRIPTION: **The Ceco Series Single Flush / Embossed Inswing Commercial Steel Doors –Impact**

APPROVAL DOCUMENT: Drawing No RD0728, titled "3-0 x 7-0 , Series Regent, Omega, Imperial, Versa door", prepared by manufacturer, sheets 1 through 9 of 9 dated 05/22/02 and latest revised on 10-10-02, bearing the Miami-Dade County Product Control Approval stamp with the Notice of Acceptance number and approval date by the Miami-Dade County Product Control Division.

MISSILE IMPACT RATING: **Large and Small Missile Impact**

LABELING: Each unit shall bear a permanent label with the manufacturer's name or logo, city, state and following statement: "Miami-Dade County Product Control Approved", unless otherwise noted herein.

RENEWAL of this NOA shall be considered after a renewal application has been filed and there has been no change in the applicable building code negatively affecting the performance of this product.

TERMINATION of this NOA will occur after the expiration date or if there has been a revision or change in the materials, use, and/or manufacture of the product or process. Misuse of this NOA as an endorsement of any product, for sales, advertising or any other purposes shall automatically terminate this NOA. Failure to comply with any section of this NOA shall be cause for termination and removal of NOA.

ADVERTISEMENT: The NOA number preceded by the words Miami-Dade County, Florida, and followed by the expiration date may be displayed in advertising literature. If any portion of the NOA is displayed, then it shall be done in its entirety.

INSPECTION: A copy of this entire NOA shall be provided to the user by the manufacturer or its distributors and shall be available for inspection at the job site at the request of the Building Official.

This NOA consists of this page 1 as well as approval document mentioned above.

The submitted documentation was reviewed by **Ishaq I. Chanda, P.E.**

PRODUCT CONTROL ACCEPTED

NOA No 02-0807.04
Expiration Date: October 31, 2007
Approval Date: October 31, 2002
Page 1

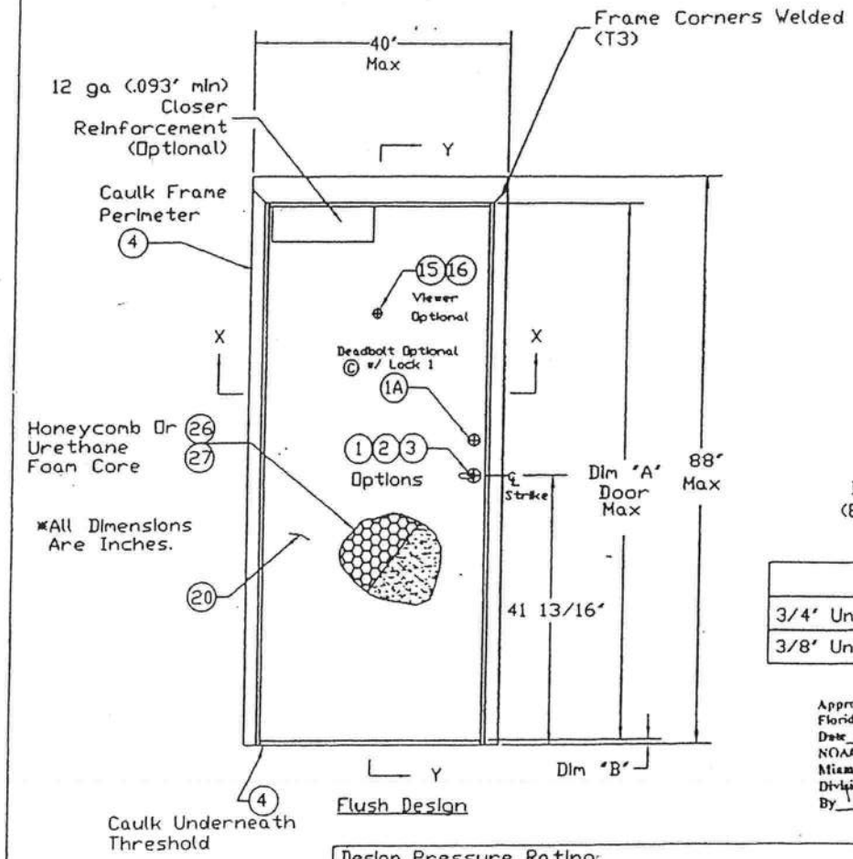

Flush Design

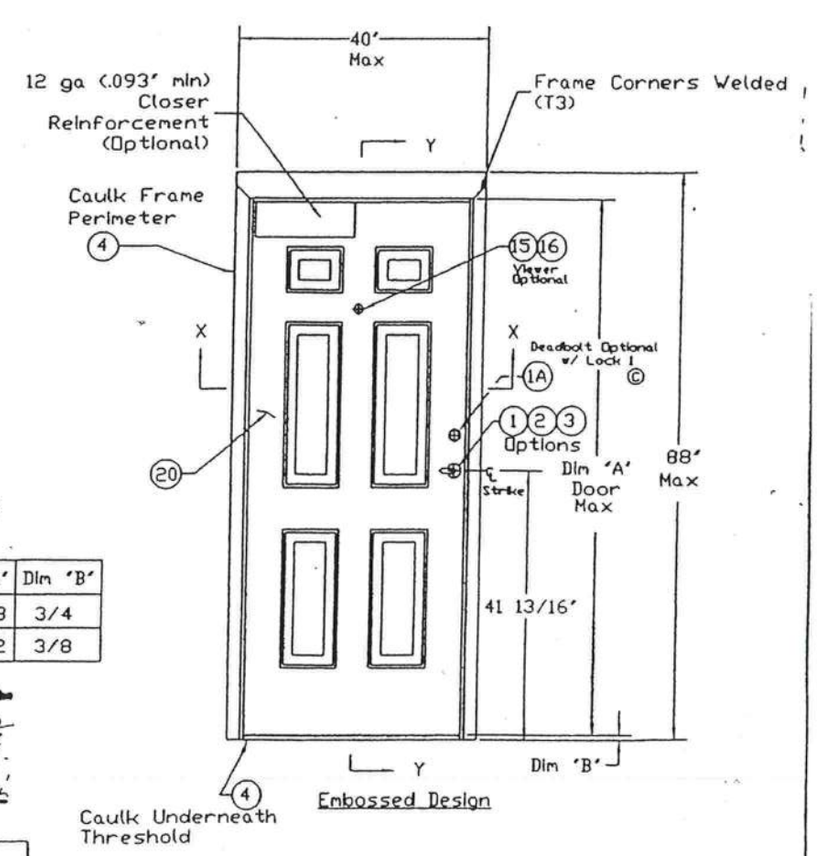

Embossed Design

In-Swing Door
(Exterior View)

	Dim "A"	Dim "B"
3/4" Undercut	83 1/8	3/4
3/8" Undercut	83 1/2	3/8

Approved as complying with the Florida Building Code
Date OCTOBER 31, 2002
NOA# 02-0807.04
Miami Dade Product Control Division
By Ishaq I. Chanda

Design Pressure Rating		
	Where Water Infiltration Requirement Is Needed	Where Water Infiltration Requirement Is Not Needed
Positive	Not Approved	+70 PSF
Negative	Not Approved	-70 PSF

Notes:
1) In-swing Not Approved For Water Infiltration
2) This Door Does Not Need A Hurricane Protection System
3) Hinge Spacing Is 33" O.C., 13" From Top Of Frame & 9" From The Botton.

Sheet 2	Frame Anchor Installation
Sheet 3	Threshold Installation
Sheet 3	Weatherstrip Installation
Sheet 4	Door Latch Reinforcement
Sheet 5-8	Cross Section View
Sheet 9	Bill Of Material

MATERIAL SPECIFICATIONS:
Finish: Rust Inhibitive Primer

3-0 x 7-0 Series
Regent, Omega, Imperial, & Versadoor
In-Swing Elevation Drawing

CECO DOOR PRODUCTS
Milan, Tennessee 38358

ISSUE	REVISIONS
B 10/10/02 LT	Revised Per Marked-Up Drawings From Ishaq Chanda.
A 8/28/02 LT	Revised Per Marked-Up Drawings From Ishaq Chanda.

DRAWN BY: LT
DATE: 5/22/02
DRAWING NUMBER: RD0728
Sheet 1 of 9

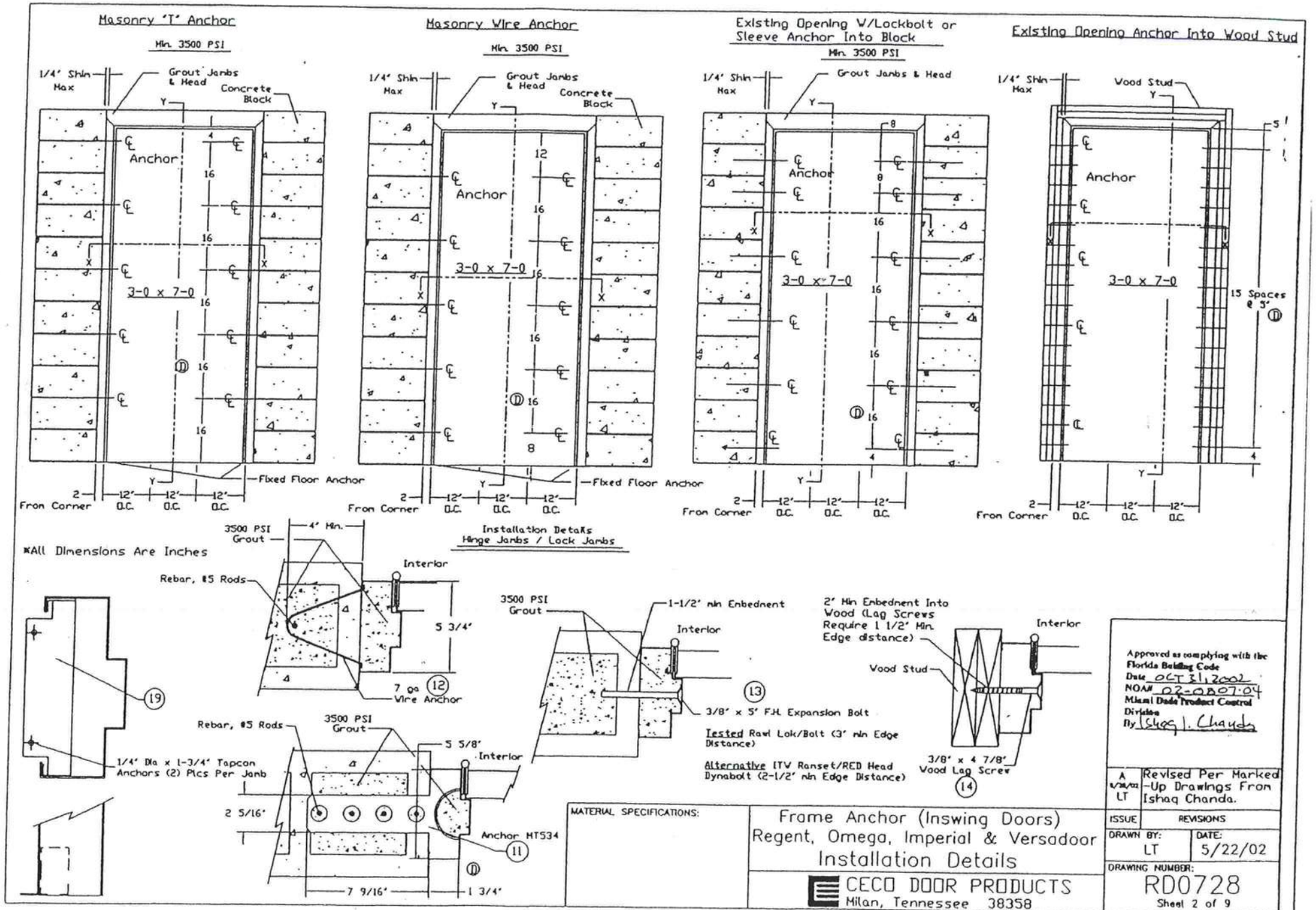
Masonry 'T' Anchor
Min. 3500 PSI
Masonry Wire Anchor
Min. 3500 PSI
Existing Opening W/Lockbolt or Sleeve Anchor Into Block
Min. 3500 PSI
Existing Opening Anchor Into Wood Stud
1/4" Shim Max
Grout Jambs & Head
Concrete Block
Wood Stud
Anchor
3-0 x 7-0
15 Spaces @ 5"
Fixed Floor Anchor
From Corner
O.C.
*All Dimensions Are Inches
3500 PSI Grout
4" Min.
Rebar, #5 Rods
Interior
5 3/4"
7 ga Wire Anchor
Installation Details
Hinge Jambs / Lock Jambs
1-1/2" min Embedment
3/8" x 5" F.H. Expansion Bolt
Tested Rawl Lok/Bolt (3" min Edge Distance)
Alternative ITW Ramset/RED Head Dynabolt (2-1/2" min Edge Distance)
2" Min Embedment Into Wood (Lag Screws Require 1 1/2" Min. Edge distance)
3/8" x 4 7/8" Wood Lag Screw
1/4" Dia x 1-3/4" Tapcon Anchors (2) Pcs Per Jamb
5 5/8"
2 5/16"
Anchor MT534
7 9/16"
1 3/4"
Approved as complying with the Florida Building Code
Date OCT 31, 2002
NOA# 02-0807.04
Miami Dade Product Control Division
By Ishaq I. Chanda
A 5/28/02 LT
Revised Per Marked-Up Drawings From Ishaq Chanda.
ISSUE
REVISIONS
DRAWN BY: LT
DATE: 5/22/02
DRAWING NUMBER: RD0728
Sheet 2 of 9
MATERIAL SPECIFICATIONS:
Frame Anchor (Inswing Doors)
Regent, Omega, Imperial & Versadoor
Installation Details
CECO DOOR PRODUCTS
Milan, Tennessee 38358

*Note: Structural Member At Header Must Be Designed To carry 58.3#/ft. load Imposed And Must Be Reviewed By Building Official.

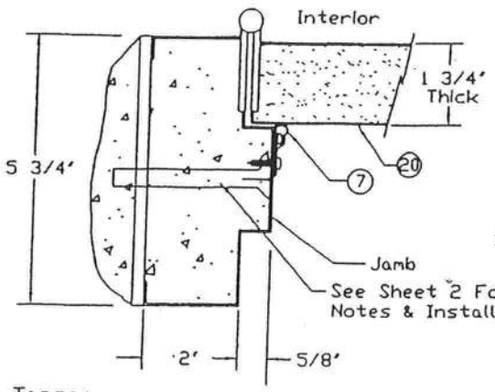

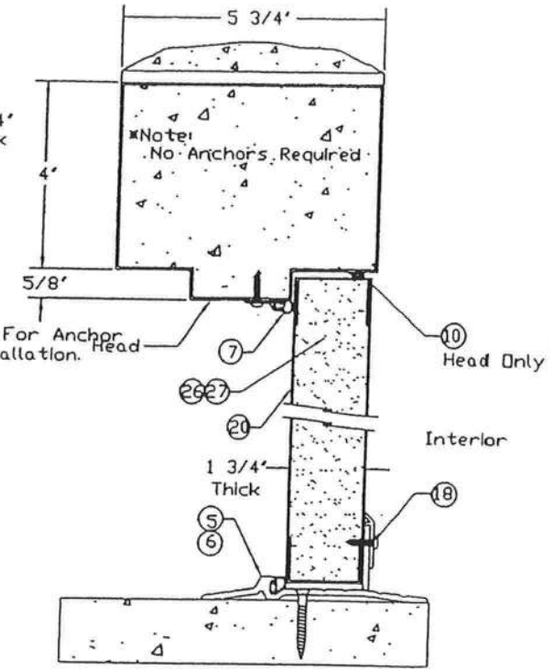

Section Y-Y

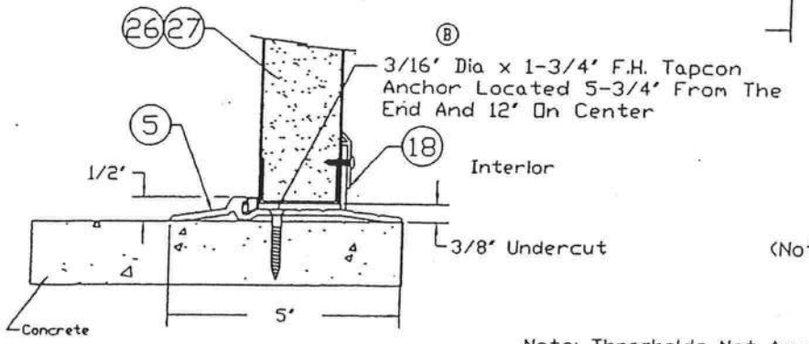

Threshold: Penko 2005AV

Inswing
(Not Approved For Water)

Note: Thresholds Not Approved For Water.

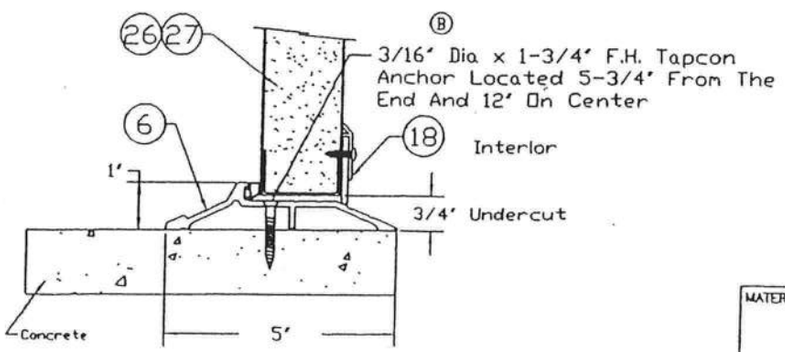

Threshold: Penko 181AV

Approved as complying with the Florida Building Code
Date OCT 31, 2002
NOA# 02-0807.04
Miami Dade Product Control Division
By Ishaq I. Chanda

D 10/18/02 LT	Revised Per Marked-Up Drawings From Ishaq Chanda	
C 8/29/02 LT	Revised Per Marked-Up Drawings From Ishaq Chanda	
ISSUE	REVISIONS	
DRAWN BY: LT	DATE: 5/22/02	

MATERIAL SPECIFICATIONS:

Threshold & Weatherstrip (Inswing Doors)
Regent, Omega, Imperial, Versadoor
Installation Details

CECO DOOR PRODUCTS
Milan, Tennessee 38358

RD0728
Sheet 3 Of 9

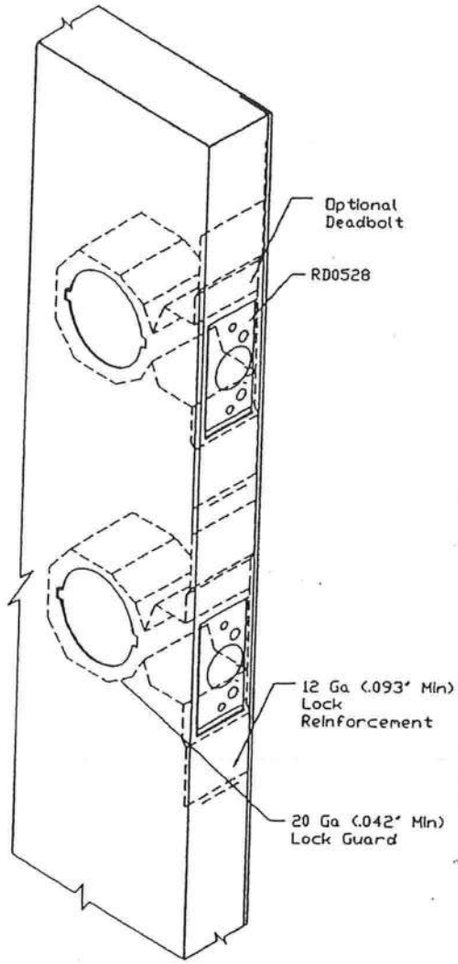

Schlage AL53PD

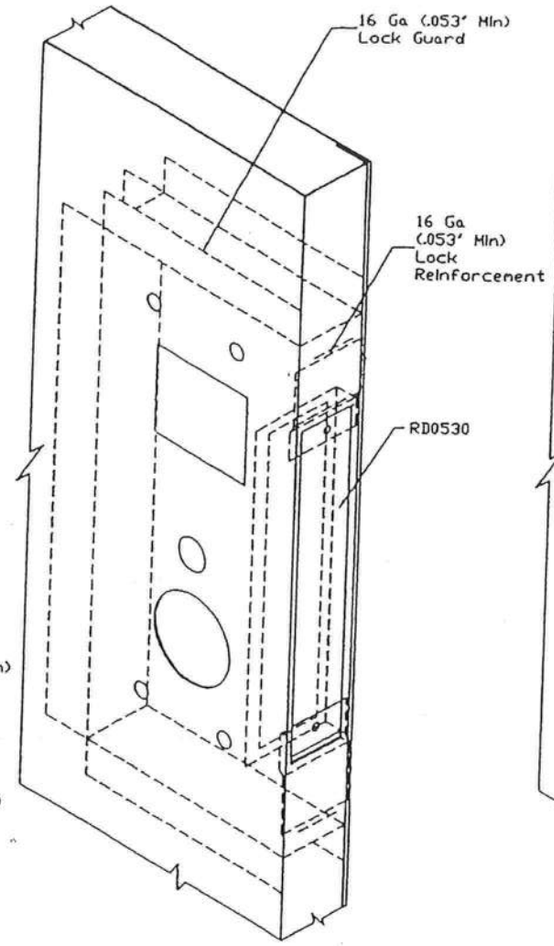

Saflok MT

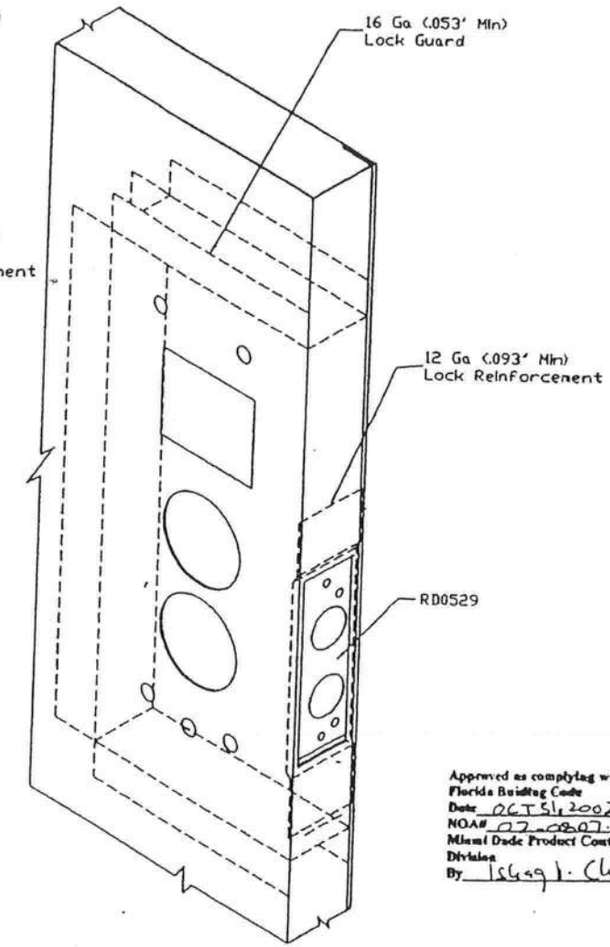

Saflok Premier SL2500

Approved as complying with the Florida Building Code
Date OCT 5, 2002
NOA# 02-0807.04
Miami Dade Product Control Division
By Ishaq I. Chundi

A 8/28/02 LT	Added RD0528, RD0529 & RD0530.
ISSUE	REVISIONS

MATERIAL SPECIFICATIONS:

Lock Reinforcement (Inswing Doors)
Regent, Omega, Imperial, Versadoor
Reinforcement Details

CECO DOOR PRODUCTS
Milan, Tennessee 38358

DRAWN BY:	DATE:
LT	5/28/02

DRAWING NUMBER:
RD0728
Sheet 4 of 9

*Note: Structural Member At Head Must Be Designed To Carry 58.3 #/ft. Load Imposed And Must Be Reviewed By Building Official.

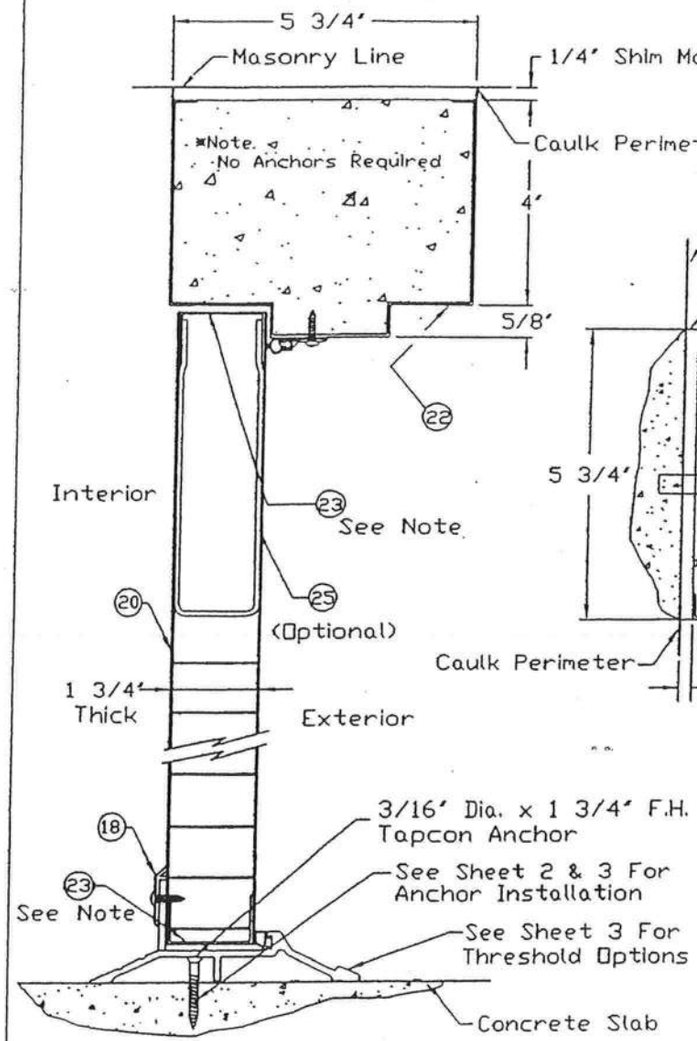

Section Y-Y

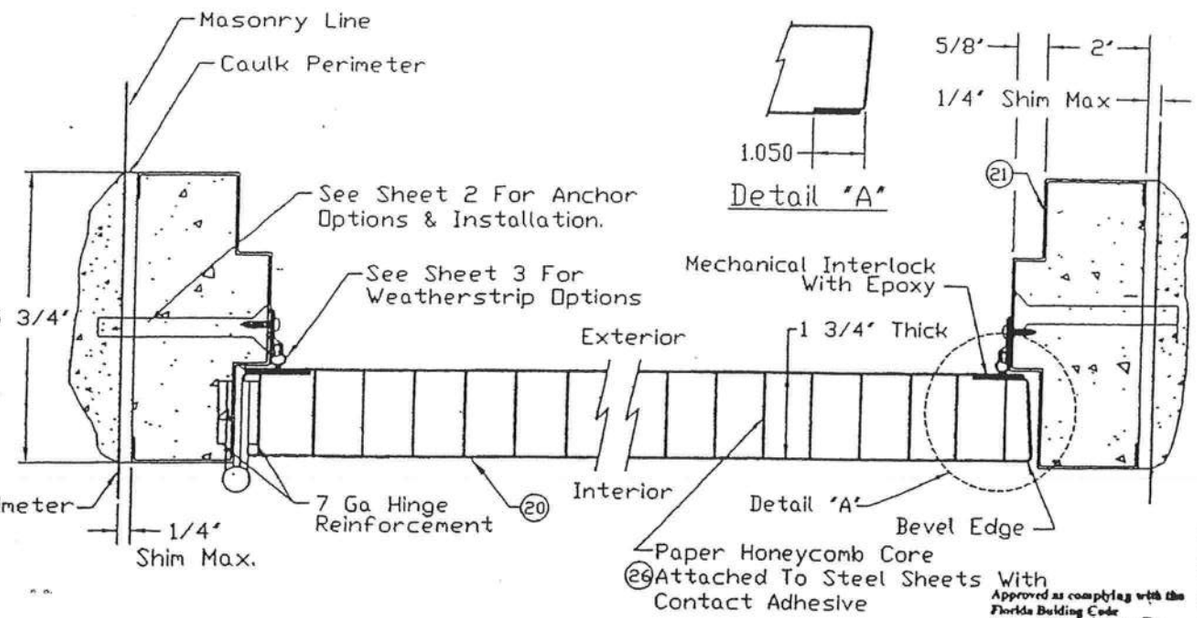

Section X-X

Note 1: Top and Bottom Channel Tack Welded To Both Skins 3 Inches From Lock Edge And 6 Inches On Centers

Approved as complying with the Florida Building Code
Date OCT 31, 2002
NOA# 02-0807.04
Miami Dade Product Control Division
By: Ishaq J. Chunda

ISSUE	REVISIONS
C 10/28/02 LT	Revised Per Marked-up Drawings From Ishaq Chonda.
B 8/30/02 LT	Revised Per Marked-up Drawings From Ishaq Chonda.

MATERIAL SPECIFICATIONS:

Cross Section View
(Inswing Doors)
Regent Handed Door

CECO DOOR PRODUCTS
Milan, Tennessee 38358

DRAWN BY: LT
DATE: 5/22/02
DRAWING NUMBER: RD0728
Sheet 5 of 9

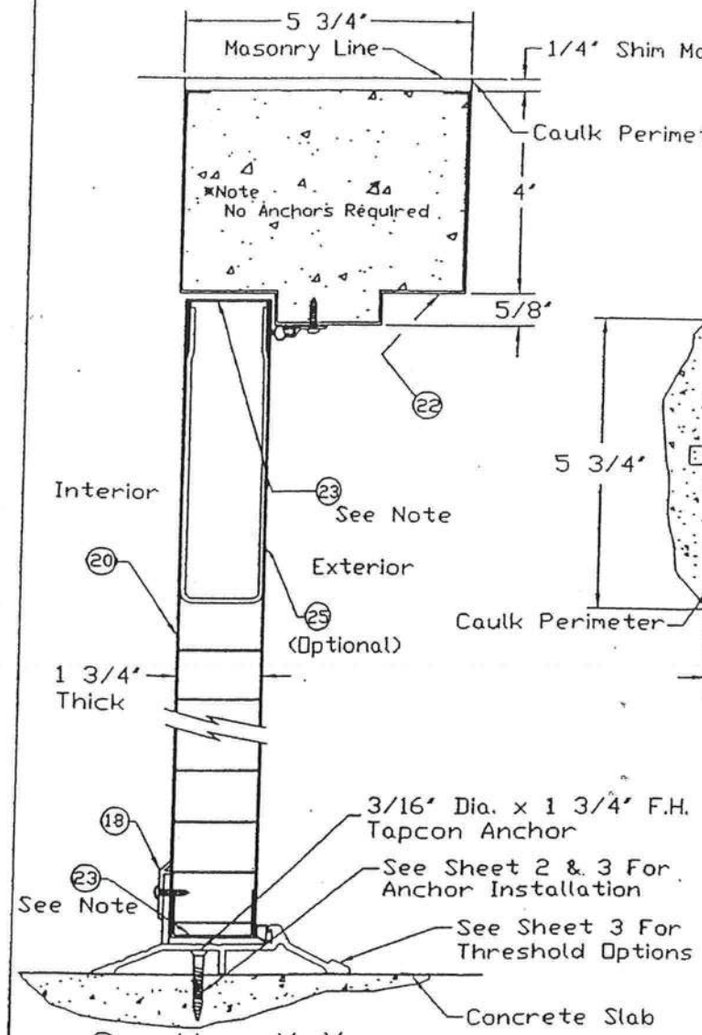

Section Y-Y

*Note: Structural Member At Head Must Be Designed To Carry 58.3 #/ft. Load Imposed And Must Be Reviewed By Building Official.

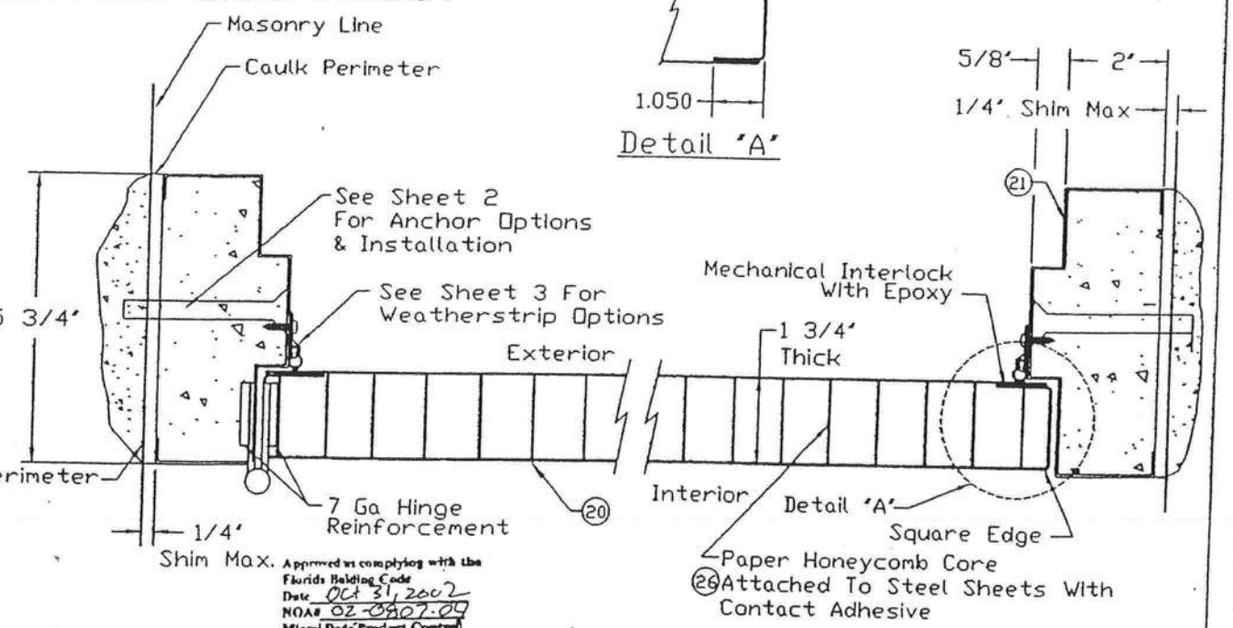

Section X-X

Approved as complying with the Florida Building Code
Date Oct 31, 2002
NOA# 02-0907.09
Miami Dade Product Control Division
By Ishaq Chanda

Note 1: Top and Bottom Channel Tack Welded To Both Skins 3 Inches From Lock Edge And 6 Inches On Centers

B 10/28/02 LT	Revised Per Marked-up Drawings From Ishaq Chanda.
A 9/2/02 LT	Revised Per Marked-up Drawings From Ishaq Chanda.
ISSUE	REVISIONS

MATERIAL SPECIFICATIONS:

Cross Section View
(In-Swing Doors)
Omega Handed Door

CECO DOOR PRODUCTS
Milan, Tennessee 38358

DRAWN BY: LT
DATE: 5/23/02
DRAWING NUMBER: RD0728
Sheet 6 of 9

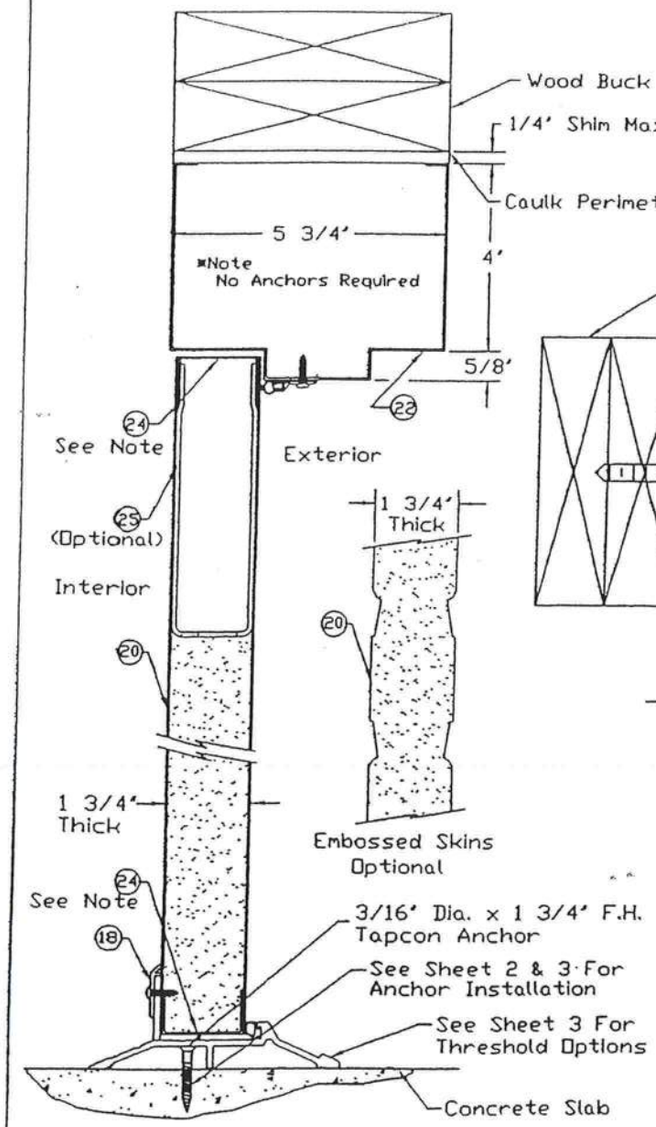

Section Y-Y

Note: Structural member at Head Must Be Designed To carry 58.3 #/ft. Load Imposed And Must Be Reviewed By Building Official.

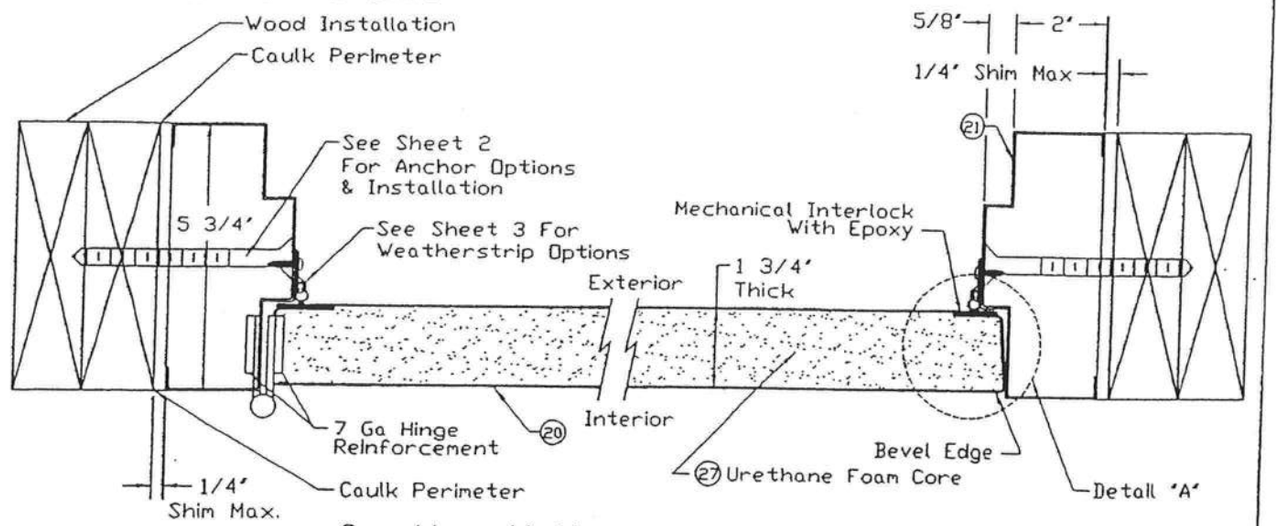

Section X-X.

Note: Top & Bottom Channels Assembled Std Method To Skins With Spot Welds & Tape. Channels Are Then Tack Welded To Both Skins 3' From Lock Edge And 6 Inches On Center.

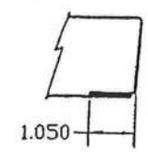

Detail 'A'

Approved as complying with the Florida Building Code
Date OCT 31, 2002
NOA# 02-0807.04
Miami Dade Product Control Division
By Ishaq I. Chanda

B 5/23/02 LT	Revised Per Marked-Up Drawings From Ishaq Chanda.
ISSUE	REVISIONS

MATERIAL SPECIFICATIONS:

Cross Section View
(In-Swing Doors)
Imperial Handed Door

CECO DOOR PRODUCTS
Milan, Tennessee 38358

DRAWN BY: LT
DATE: 5/23/02
DRAWING NUMBER: RD0728
Sheet 7 of 9

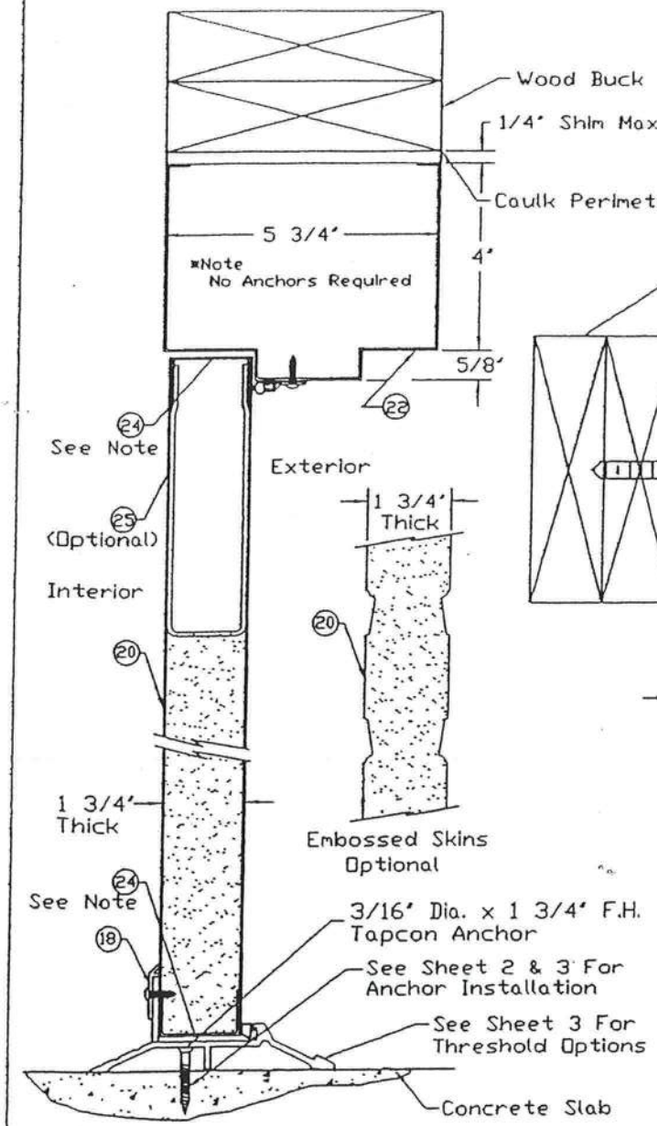

Section Y-Y

Note: Structural member at Head Must Be Designed To carry 58.3 #/ft. Load Imposed And Must Be Reviewed By Building Official.

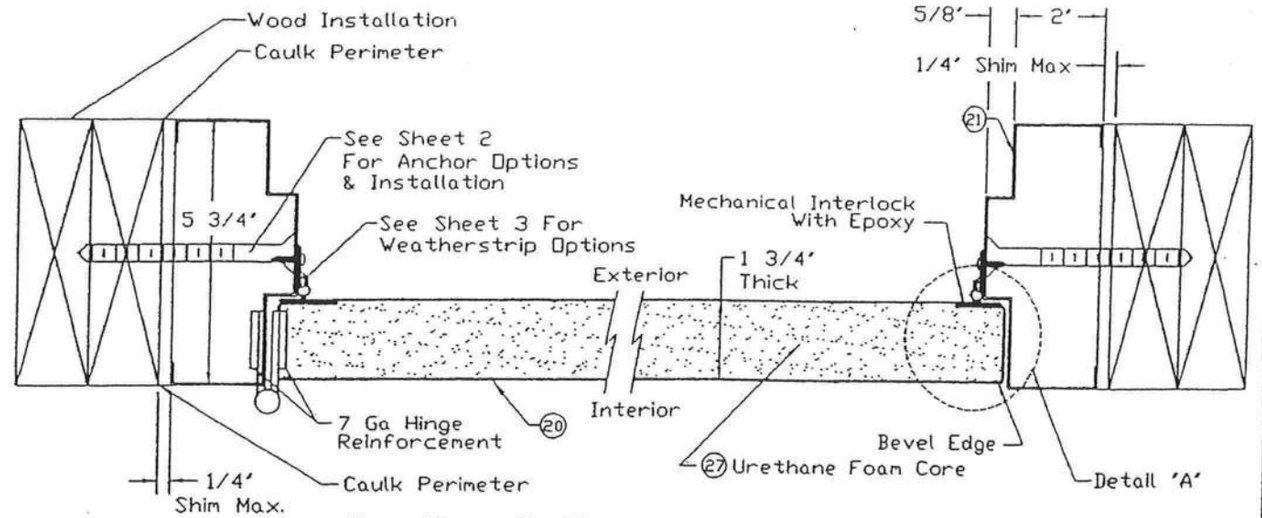

Section X-X

Note: Top & Bottom Channels Assembled Std Method To Skins With Spot Welds & Tape. Channels Are Then Tack Welded To Both Skins 3' From Lock Edge And 6 Inches On Center.

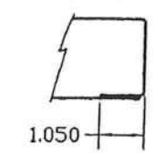

Detail 'A'

Approved as complying with the Florida Building Code
Date OCT 21, 2002
NOA# 02-0807.04
Miami Dade Product Control Division
By Ishaq I. Chanda

B 5/23/02 LT	Revised Per Marked-Up Drawings From Ishaq Chanda.
ISSUE	REVISIONS

MATERIAL SPECIFICATIONS:

Cross Section View
(In-Swing Doors)
Versadoor Handed Door

CECO DOOR PRODUCTS
Milan, Tennessee 38358

DRAWN BY: LT
DATE: 5/23/02
DRAWING NUMBER: RD0728
Sheet 8 of 9

1	Cylindrical Lock & Lock Reinforcement (RD0528)	Schlage	AL53PD
1A	Deadbolt (Optional) (D)	Schlage	B100
2	Or Cylindrical Lock & Lock Reinforcement	Saflok	Premier SL2500
3	Or Mortise Lock	Saflok	MT
4	Caulk	Dow Corning	899 Silicone Glazing Sealant
5	Threshold	Pemko	2005AV36
6	Or	Pemko	181AV36
7	Weatherstrip	Pemko	303AV3684
8	Hinge (Ball Bearing)	Hager or Equal (Attached w/ (8) #12-24 x 1/2 HS Per Hinge)	4-1/2 x 4-1/2 x .134 (Std Weight)
9	Or (Spring)	Hager or Equal (Attached w/ (8) #12-24 x 1/2 HS Per Hinge)	4-1/2 x 4-1/2 x .134 (Std Weight)
10	Weatherstrip	Pemko	S88
11	Frame Anchor	Masonary Tee (RD0057)	16 ga (.053' min) Galv Steel Fymin = 30ksi
12	Or	Wire, Relaxed Dimension 9' x 8'	#7 (.167 ' min) Galv Steel Wire (70,000 - 90,000 psi Tensile Strength)
13	Or	Expansion Bolt	3/8' x 5' F.H. Rawl Lok/Bolt Or 3/8' x 5' F.H. Ranset/RED Head
14	Or	Wood Lag Screw	3/8' x 4-5/8'
15	Viewer	Hager	1755
16	Or	MAG Security	8724-C
17	Drip Cap; Top	Pemko	346
18	Sweep	Pemko	315 N
19	Floor Anchor	Fixed Floor Anchor	16 ga (.053' min) galvanized Steel
20	Face Sheet A60 Galv Conforming To ASTM A653	Commercial Steel Type B (Minimum Yield Strength 30,000psi)	16 Ga (.053' min)
21	Series SF, Frame Jamb, Double Rabbet Profile, A60 Galv Conforming To ASTM A653	16 Ga (.053' min) Commercial Steel Type B (Minimum Yield Strength 30,000psi)	2' Face, 5-3/4' Depth Min. (RD0033)
22	Series SF, Frame Head, Double Rabbet, Profile A60 Galv Conforming To ASTM A653	16 Ga (.053' min) Commercial Steel Type B (Minimum Yield Strength 30,000psi)	4' Face, 5-3/4' Depth Min. (RD0033)
23	Door Channels; Spot Welded To Bottom Skin Glued To Top Skin; Tack Welded To Both	16 Ga (.053' min) A60 Galv Conforming To ASTM A653 Commercial Steel Type B (Minimum Yield Strength 30,000psi)	16 ga (.053' min) x 1' x 1-3/4' x 1'
24	Door Channels; Spot Welded To Bottom Skin Taped To Top Skin; Tack Welded To Both	16 Ga (.053' min) A60 Galv Conforming To ASTM A653 Commercial Steel Type B (Minimum Yield Strength 30,000psi)	16 ga (.053' min x 1' x 1-3/4' x 1'
25	Closer Reinforcement (Optional)	12 Ga (.093' min) CS Type B	12 ga (.093' min) x 5-3/8' x 16'
26	Honeycomb Core	Non-Impregnated Kraft Paper (E)	1.2' Nominal Cell Size
27	Urethane Core	Foam Enterprises	2 lb/ft^3 Density

Approved as complying with the Florida Building Code
Date Oct 31, 2002
NOA# 02-0807.04
Miami Dade Product Control Division
By Ishaq I. Chanda

B 10/10/02 LT	Revised Per Marked-Up Drawings From Ishaq Chanda.
A 9/4/02 LT	Revised Per Marked-Up Drawings From Ishaq Chanda.

MATERIAL SPECIFICATIONS:

3-0 x 7-0 Series
In-Swing Bill Of Materials

CECO DOOR PRODUCTS
Milan, Tennessee 38358

ISSUE	REVISIONS
DRAWN BY: LT	DATE: 5/28/02
DRAWING NUMBER: RD0728 Sheet 9 Of 9	

MIAMI-DADE

BUILDING CODE COMPLIANCE OFFICE (BCCO)
PRODUCT CONTROL DIVISION

MIAMI-DADE COUNTY, FLORIDA
METRO-DADE FLAGLER BUILDING
140 WEST FLAGLER STREET, SUITE 1603
MIAMI, FLORIDA 33130-1563
(305) 375-2901 FAX (305) 375-2908

NOTICE OF ACCEPTANCE (NOA)

Ceco Door Products
9159 Telecom Drive
Milan, TN 38358

Out Swing

SCOPE:
This NOA is being issued under the applicable rules and regulations governing the use of construction materials. The documentation submitted has been reviewed by Miami-Dade County Product Control Division and accepted by the Board of Rules and Appeals (BORA) to be used in Miami Dade County and other areas where allowed by the Authority Having Jurisdiction (AHJ).

This NOA shall not be valid after the expiration date stated below. The Miami-Dade County Product Control Division (In Miami Dade County) and/or the AHJ (in areas other than Miami Dade County) reserve the right to have this product or material tested for quality assurance purposes. If this product or material fails to perform in the accepted manner, the manufacturer will incur the expense of such testing and the AHJ may immediately revoke, modify, or suspend the use of such product or material within their jurisdiction. BORA reserves the right to revoke this acceptance, if it is determined by Miami-Dade County Product Control Division that this product or material fails to meet the requirements of the applicable building code.

This product is approved as described herein, and has been designed to comply with the High Velocity Hurricane Zone of the Florida Building Code.

DESCRIPTION: Series "Regent" & "Omega" 18 ga. 3^0-7^0 Outswing Commercial Steel Door

APPROVAL DOCUMENT: Drawing No. **RD0087**, titled "3-0 x 7-0 Series", sheets 1 through 7 of 7, dated 5/30/97 with revision C dated 2/24/00,prepared by the manufacturer, bearing the Miami-Dade County Product Control Renewal stamp with the Notice of Acceptance number and expiration date by the Miami-Dade County Product Control Division.

MISSILE IMPACT RATING: Large and Small Missile Impact

LABELING: Each unit shall bear a permanent label with the manufacturer's name or logo, city, state and following statement: "Miami-Dade County Product Control Approved", unless otherwise noted herein.

RENEWAL of this NOA shall be considered after a renewal application has been filed and there has been no change in the applicable building code negatively affecting the performance of this product.

TERMINATION of this NOA will occur after the expiration date or if there has been a revision or change in the materials, use, and/or manufacture of the product or process. Misuse of this NOA as an endorsement of any product, for sales, advertising or any other purposes shall automatically terminate this NOA. Failure to comply with any section of this NOA shall be cause for termination and removal of NOA.

ADVERTISEMENT: The NOA number preceded by the words Miami-Dade County, Florida, and followed by the expiration date may be displayed in advertising literature. If any portion of the NOA is displayed, then it shall be done in its entirety.

INSPECTION: A copy of this entire NOA shall be provided to the user by the manufacturer or its distributors and shall be available for inspection at the job site at the request of the Building Official.
This NOA **renews NOA # 00-0315.03** and consists of this page 1 as well as approval document mentioned above.
The submitted documentation was reviewed by **Manuel Perez, P.E.**

PRODUCT CONTROL ACCEPTED

NOA No 03-0411.01
Expiration Date August 14, 2008
Approval Date: May 15, 2003

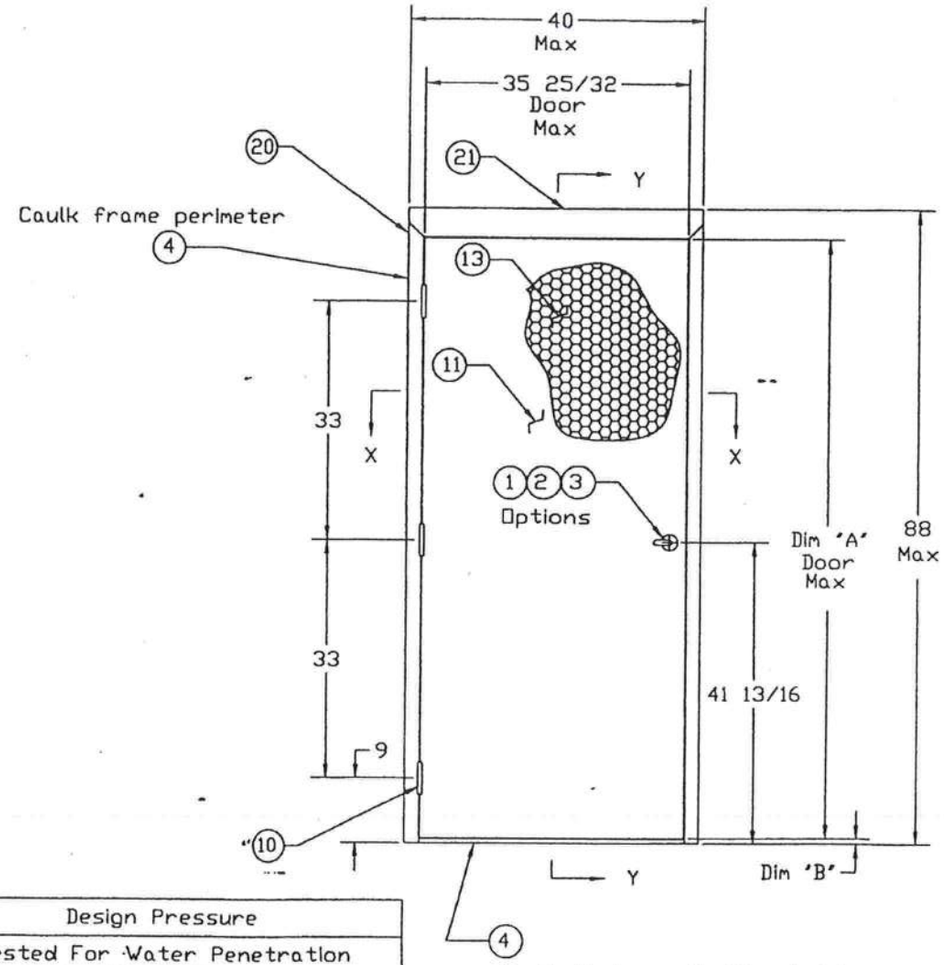

Sheet	Frame Anchor Installation
Sheet 2	Threshold Installation
Sheet 3	Weatherstrip Installation
Sheet 3	Door Latch Reinforcement
Sheet 4	Cross Section View
Sheet 5-6	Bill Of Material
Sheet 7	

Design Pressure		
Tested For Water Penetration		
With Overhang	+85 psf	-60 psf
Without Overhang	+60 psf	-60 psf

	Dim 'A'	Dim 'B'
3/4" Undercut	83 1/8	3/4
3/8" Undercut	83 1/2	3/8

PRODUCT RENEWED
as complying with the Florida
Building Code
Acceptance No. 03-0411.01
Expiration Date AUG. 14, 2008
By Manuel Serra
Miami-Dade Product Control
Division

APPROVED AS COMPLYING WITH THE
SOUTH FLORIDA BUILDING CODE
DATE June 08, 2000
BY Manuel Serra
PRODUCT CONTROL DIVISION
BUILDING CODE COMPLIANCE OFFICE
ACCEPTANCE NO. 00-0315.03

ISSUE	REVISIONS
C 2/24/00 JAR	Revised Format, Transfered Information from NOA
B 7/22/97 GWS	Deleted (2) Drawings Revised Sheet Numbers

DRAWN BY: GWS
DATE: 5/30/97

MATERIAL SPECIFICATIONS:

Finish: Rust Inhibitive Primer

3-0 x 7-0 Series Elevation Drawing

CECO DOOR PRODUCTS
Milan, Tennessee 38358

DRAWING NUMBER:
RD0087
Sheet 1 Of 7

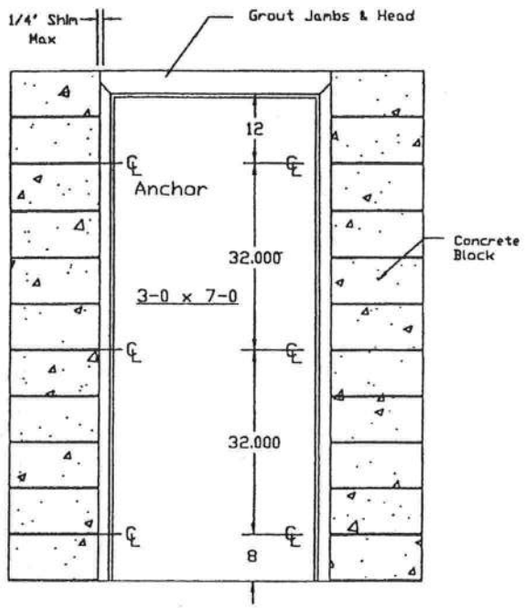

Masonry "T" Anchor

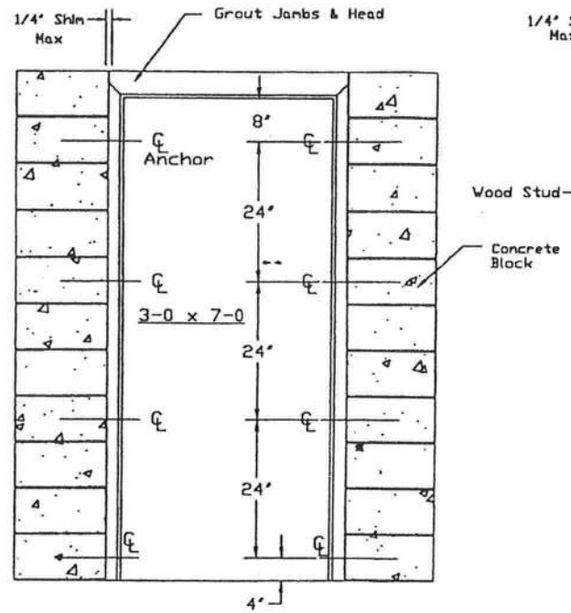

Existing Opening Anchor Into Block

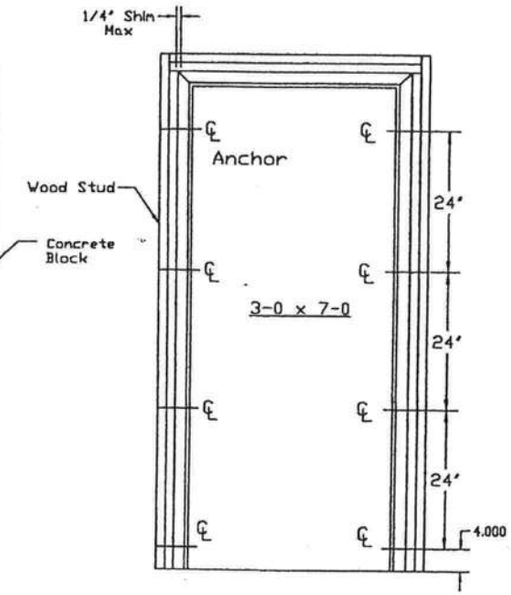

Existing Opening Anchor Into Wood Stud

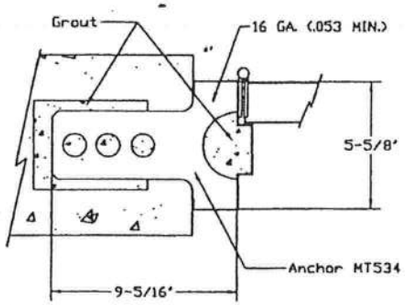

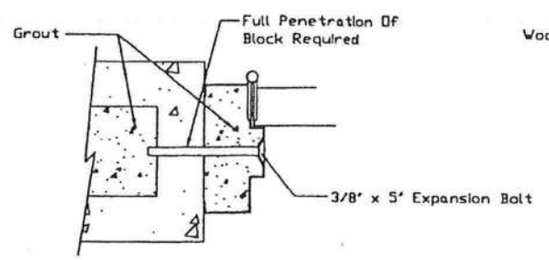

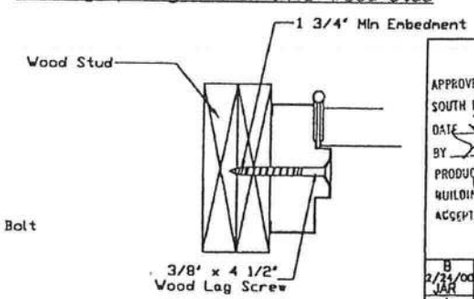

PRODUCT RENEWED
as complying with the Florida Building Code
Acceptance No. 03-0411.01
Expiration Date Aug. 14, 2008
By Manuel Perez
Miami-Dade Product Control Division

APPROVED AS COMPLYING WITH THE SOUTH FLORIDA BUILDING CODE
DATE June 08, 2000
BY Manuel Perez
PRODUCT CONTROL DIVISION
BUILDING CODE COMPLIANCE OFFICE
ACCEPTANCE NO. 00-0315.03

NOTES:
1. SEE SHEET 7 FOR BILL OF MATERIALS

MATERIAL SPECIFICATIONS:

Frame Anchor Installation Details

CECO DOOR PRODUCTS
Milan, Tennessee 38358

ISSUE	REVISIONS
B 2/24/00 JAR	Revised Format, Transfered Information from NOA
A 7/22/97 GWS	Revised Sheet Number

DRAWN BY: GWS
DATE: 5/30/97
DRAWING NUMBER: RD0087
Sheet 2 of 7

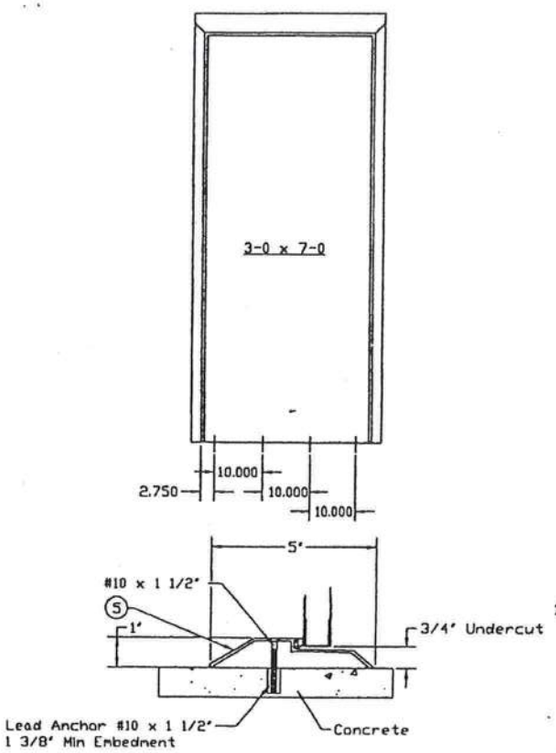

Threshold: National Guard 803S

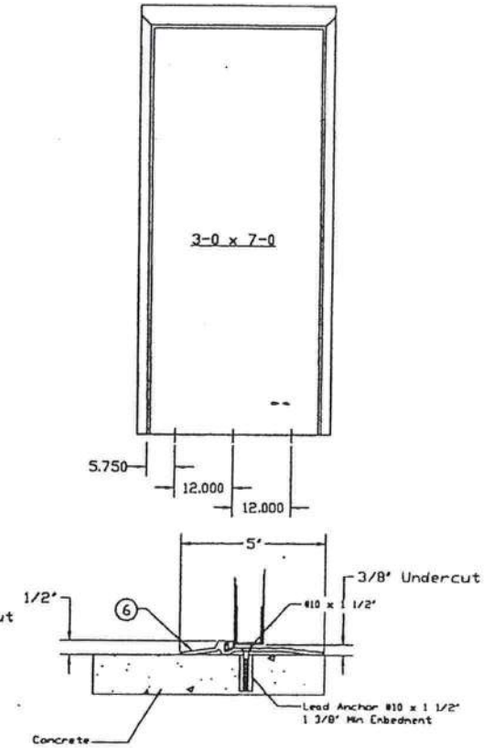

Threshold: Penko 2005AV

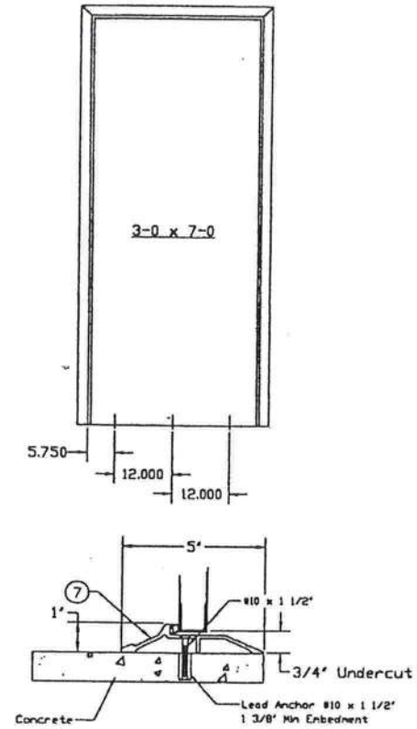

Threshold: Penko 181AV

NOTE: 1. All thresholds shown are made from extruded aluminum with slide-in vinyl weatherstrip insert.

PRODUCT RENEWED
as complying with the Florida
Building Code
Acceptance No. 03-0411.01
Expiration Date AUG. 14, 2008
By Manuel Perez
Miami-Dade Product Control
Division

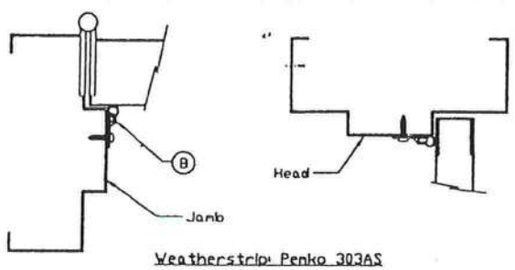

Weatherstrip: Penko 303AS

NOTE:
2. LOCATION: ALONG THE ENTIRE HEAD AND JAMB PERIMETER. ATTACHED WITH THIRTY FOUR (34) #8 X 3/4" PPH SMS SPACED AT 6" O/C.

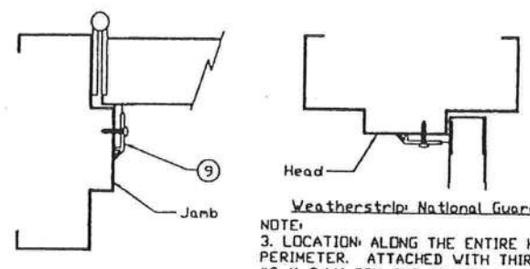

Weatherstrip: National Guard 130NA

NOTE:
3. LOCATION: ALONG THE ENTIRE HEAD AND JAMB PERIMETER. ATTACHED WITH THIRTY FOUR (34) #8 X 3/4" PPH SMS SPACED AT 6" O/C.

NOTE: 4. See Sheet 7 For Bill of Material

APPROVED AS COMPLYING WITH THE
SOUTH FLORIDA BUILDING CODE
DATE June 08/2000
BY Manuel Perez
PRODUCT CONTROL DIVISION
BUILDING CODE COMPLIANCE OFFICE
ACCEPTANCE NO. 00-0315.03

ISSUE	REVISIONS
C 2/24/00 JAR	Revised Format, Transfered Information from NOA
B 7/22/97 GWS	Revised Sheet Number

DRAWN BY: GWS DATE: 5/30/97

MATERIAL SPECIFICATIONS:

Threshold & Weatherstrip Installation details

CECO DOOR PRODUCTS
Milan, Tennessee 38358

RD0087
Sheet 3 Of 7

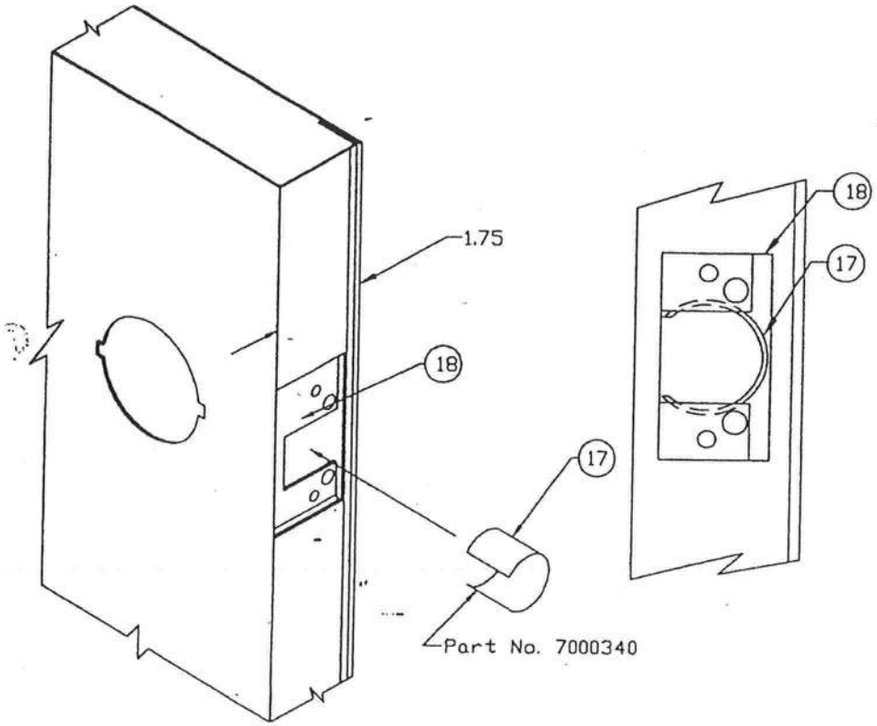

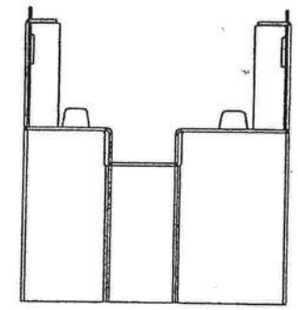

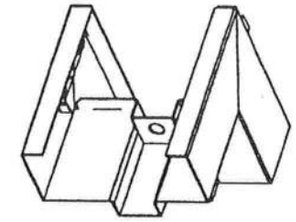

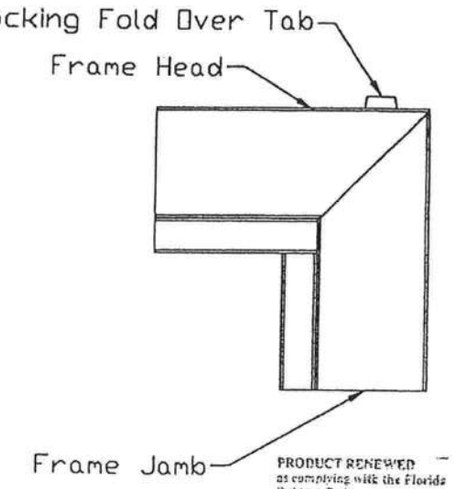

PRODUCT RENEWED
as complying with the Florida
Building Code
Acceptance No. 03-0411.01
Expiration Date AUG. 14, 2008
By Manuel Perez
Miami-Dade Product Control
Division

APPROVED AS COMPLYING WITH THE
SOUTH FLORIDA BUILDING CODE
DATE June 08, 2010
BY Manuel Perez
PRODUCT CONTROL DIVISION
BUILDING CODE COMPLIANCE OFFICE
ACCEPTANCE NO. 00-0315.03

Note: 1. For Cylindrical Lock Only
2. See Sheet 7 For Bill Of Material

ISSUE	REVISIONS
B 2/24/00 JAR	Revised Format, Transfered Information from NOA
A 7/22/97 GWS	Revised Sheet Number

MATERIAL SPECIFICATIONS:

Cylindrical Lock Reinforcement and "SF" Seriers Frame Corner Installation Details

CECO DOOR PRODUCTS
Milan, Tennessee 38358

DRAWN BY: GWS
DATE: 6/06/97
DRAWING NUMBER: RD0087
Sheet 4 of 7

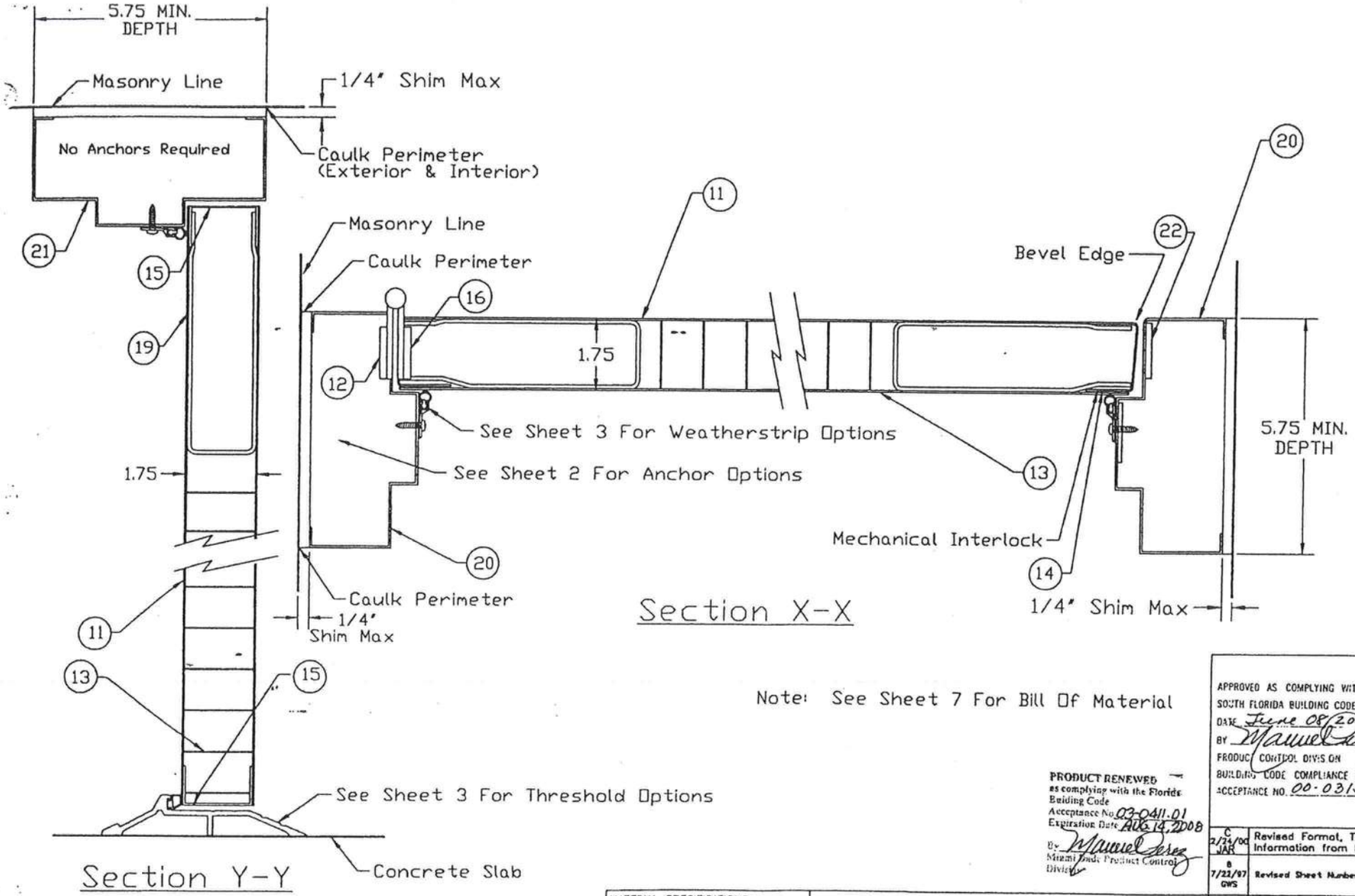

Note: See Sheet 7 For Bill Of Material

PRODUCT RENEWED as complying with the Florida Building Code
Acceptance No. 03-0411.01
Expiration Date Aug. 14, 2008
By Manuel Perez
Miami-Dade Product Control Division

APPROVED AS COMPLYING WITH THE SOUTH FLORIDA BUILDING CODE
DATE June 08, 2000
BY Manuel Perez
PRODUCT CONTROL DIVISION
BUILDING CODE COMPLIANCE OFFICE
ACCEPTANCE NO. 00-0315.03

ISSUE	REVISIONS
C 2/24/00 JAR	Revised Format, Transfered Information from NOA
B 7/23/97 GWS	Revised Sheet Number

MATERIAL SPECIFICATIONS:

Cross Section View
Regent Door

CECO DOOR PRODUCTS
Milan, Tennessee 38358

DRAWN BY: GWS
DATE: 5/30/97
DRAWING NUMBER: RD0087
Sheet 5 of 7

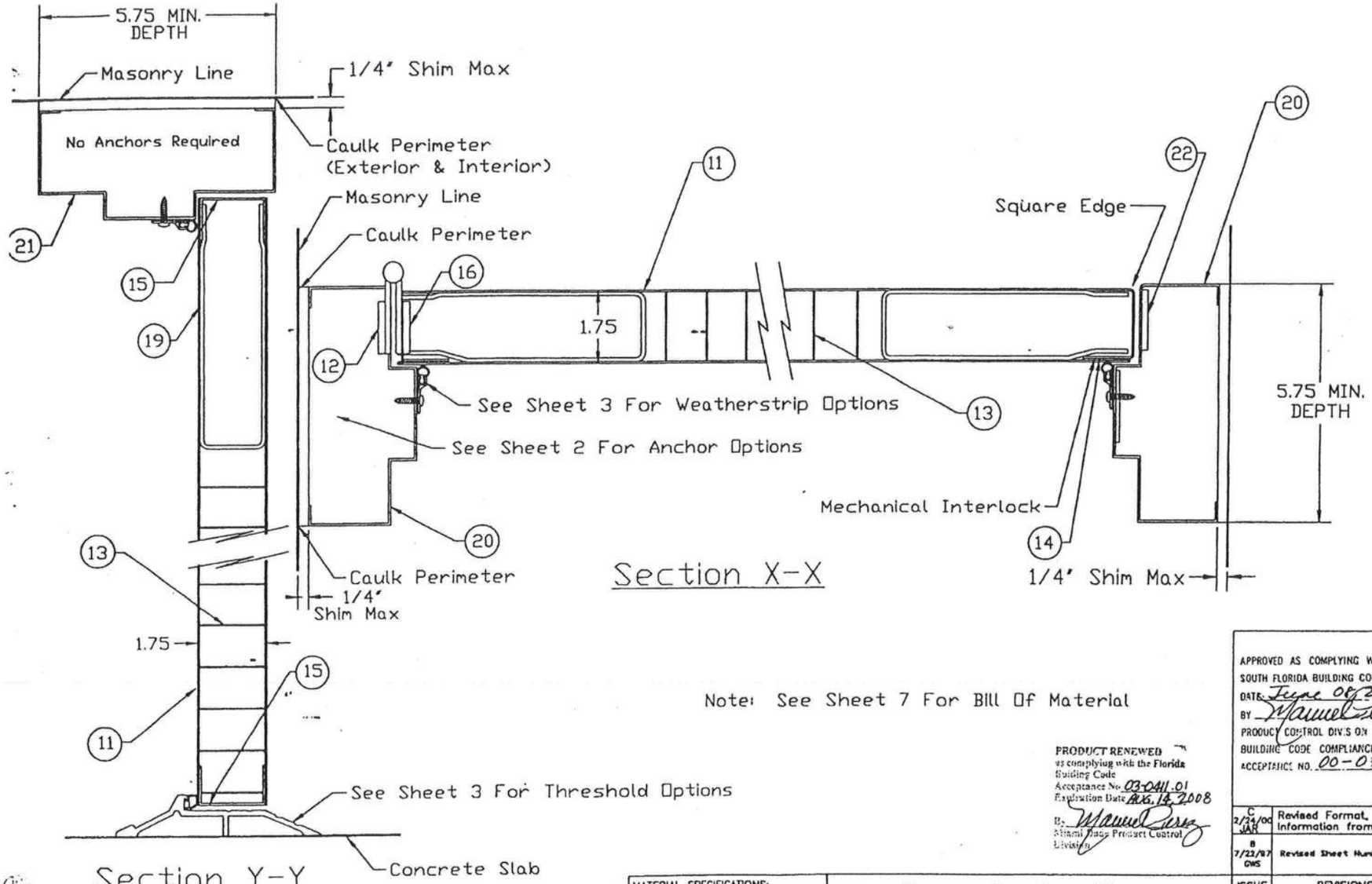

Section X-X

Section Y-Y

Note: See Sheet 7 For Bill Of Material

PRODUCT RENEWED as complying with the Florida Building Code Acceptance No. 03-0411.01 Expiration Date AUG. 13, 2008 By: Miami Dade Product Control Division

APPROVED AS COMPLYING WITH THE SOUTH FLORIDA BUILDING CODE DATE: June 08, 2000 BY: Manuel Perez PRODUCT CONTROL DIVISION BUILDING CODE COMPLIANCE OFFICE ACCEPTANCE NO. 00-0315.03

ISSUE	REVISIONS
C 2/24/00 JAH	Revised Format, Transfered Information from NOA
B 7/23/97 GWS	Revised Sheet Number

MATERIAL SPECIFICATIONS:

Cross Section View
Omega Door

CECO DOOR PRODUCTS
Milan, Tennessee 38358

DRAWN BY: GWS
DATE: 5/30/97

DRAWING NUMBER: RD0087

Sheet 6 of 7

ITEM	QTY	DESCRIPTION	MATERIAL	SIZE
1	1	SCHLAGE SERIES AL53PD GRADE 2, LATCH LOCK, SINGLE LEVER OR KNOB OPERATED		
2	1	MARKS SERIES 170AB GRADE 2, LATCH LOCK, INSIDE/OUTSIDE LEVER OPERATED		
3	1	YALE SERIES AU53070 GRADE 2 LATCH LOCK, SINGLE LEVER OR KNOB OPERATED.		
4	1	CAULK FOR INSTALLATION AND WEATHERSTRIP ADAPTER SCREWS FRAME PERIMETER (INSIDE & OUT) AND FRAME SILL CORNERS	GE SILICONE HOUSEHOLD SEALANT	
5	1	NATIONAL GUARD #B03S		
6	1	PEMKO #2005AV		
7	1	PEMKO #181AV		
8	1 ROW	PEMKO #303AS HIGH SURFACE APPLIED EXTRUDED ALUMINUM WEATHERSTRIP ADAPTER WITH A SILICON (TM) BULB INSERT		
9	1 ROW	NATIONAL GUARD #130NA 1-1/4" WIDE X 0.188" SURFACE APPLIED EXTRUDED ALUMINUM WEATHERSTRIP ADAPT. WITH A FOAM INSERT		
10	3	HAGAR BB1279, 4-1/2" X 4-1/2" X .0134" THICK STEEL HINGE EACH ATTACHED WITH EIGHT #12-24 X 1/2" FH MS		
11	1	FACE SHEET CONFORMING TO ASTM A366 AND ASTM-A568	COMMERCIAL QUALITY COLD ROLLED STEEL (MINIMUM YEILD STR. OF Fy=36,000 psi)	18 GAUGE (.042" MIN. THICK)
12	3	HINGE REINFORCING PLATE, PLATE SPOT WELDED TO FRAME JAMB AT EACH HINGE LOCATION	STEEL	1-1/4" X 9" X 7 GA.
13	1	CORE: FULL HONEYCOMB CORE PERMANENTLY BONDED TO THE INSIDE OF EACH FACE SKIN WITH NON-FLAMMABLE ADHESIVE	PHENOLIC RESIN-IMPREGNATED KRAFT PAPER	1-1/8" CELL
14	1	DENFLEX 3500 STRUCTURAL ADHESIVE EPOXY		
15	1	ROLL FORMED STEEL CHANNEL ON THE TOP AND BOTTOM OF THE DOOR SPOT WELDED TO EXTERIOR AND GLUED TO INTERIOR SKIN		1" X 1-3/4" X 1" X 16 GA. (.053" MIN)
16	3	DOOR HINGE REINFORCEMENT		1-1/4" X 9" X 7 GA.
17	1	DOOR LATCH REINFORCEMENT, STEEL "C" RING	28 GA. GALV.	.015" THICK X 1.313 INSIDE DIAMETER
18	1	DOOR LOCK REINFORCEMENT	STEEL	16 GA.
19	1	DOOR CLOSER REINFORCEMENT, ROLLED FORM CHANNELS TACK WELDED TO DOOR END CHANNELS	STEEL	12 GA. (.093")
20	2	SERIES "SF", FRAME JAMB, DOUBLE RABBET PROFILE FACE SHEET CONFORMING TO ASTM A366 AND ASTM-A653	16 GA. (.053" MIN.) STEEL COMMERCIAL QUALITY COLD ROLLED STEEL (MINIMUM YEILD STR. OF Fy=40,000 psi)	2" FACE, 5-3/4" DEPTH MIN.
21	1	SERIES "SF", FRAME HEAD, DOUBLE RABBET PROFILE FACE SHEET CONFORMING TO ASTM A366 AND ASTM-A653	16 GA. (.053" MIN.) STEEL COMMERCIAL QUALITY COLD ROLLED STEEL (MINIMUM YEILD STR. OF Fy=40,000 psi)	2" FACE, 5-3/4" DEPTH MIN.
22	1	JAMB LOCK STRIKE REINFORCING PLATE	STEEL	1-1/8" X 2-1/2" X 12 GA.

APPROVED AS COMPLYING WITH THE SOUTH FLORIDA BUILDING CODE
DATE June 08, 2000
BY [signature]
PRODUCT CONTROL DIVISION
BUILDING CODE COMPLIANCE OFFICE
ACCEPTANCE NO. 00-0315.03

PRODUCT RENEWED
as complying with the Florida Building Code
Acceptance No. 03-0411.01
Expiration Date AUG 14, 2008
By [signature]
Miami Dade Product Control Division

ISSUE	REVISIONS
B 2/24/00 JAH	Revised Format, Transfered Information from NOA
A 7/22/97 GWS	Revised Sheet Number

MATERIAL SPECIFICATIONS:

3-0 x 7-0 Series
Bill Of Materials

CECO DOOR PRODUCTS
Milan, Tennessee 38358

DRAWN BY: GWS
DATE: 6/02/97
DRAWING NUMBER: RD0087
Sheet 7 of 7

Architectural Testing

ANSI/AAMA/NWWDA 101/I.S.2-97
TEST REPORT

Rendered to:

MI WINDOWS AND DOORS, INC.

SERIES/MODEL: 740/3740 (Fin and Flange)
PRODUCT TYPE: Aluminum Single Hung
(single glazed with 3/16" annealed glass)

	Summary of Results		
Title	**Test Specimen #1**	**Test Specimen #2**	**Test Specimen #3**
Description	Flange - Equal Lite	Fin - Equal Lite	Flange - Oriel
Rating	H-R25 53 x 72	H-R35 52 x 71	H-R45 53 x 72
Operating Force	19 lbf max.	20 lbf max.	N/A
Air Infiltration	0.11 cfm/ft^2	0.12 cfm/ft^2	N/A
Water Resistance Test Pressure	6.75 psf	6.75 psf	N/A
Uniform Load Deflection Test Pressure	+25.9 psf -34.7 psf	+35.3 psf -47.2 psf	+45.0 psf -47.2 psf
Uniform Load Structural Test Pressure	+45.6 psf -52.1 psf	+53.0 psf -70.8 psf	+67.5 psf -70.8 psf
Forced Entry Resistance	Grade 10	Grade 10	N/A

Reference should be made to ATI Report No. 42250.02-122-47 for complete test specimen description and data.

130 Derry Court
York, PA 17402-9405
phone: 717-764-7700
fax: 717-764-4129

Architectural Testing

ANSI/AAMA/NWWDA 101/I.S.2-97 TEST REPORT

Rendered to:

MI WINDOWS AND DOORS, INC.
P.O. Box 370
Gratz, Pennsylvania 17030-0370

Report No.:	42250.02-122-47
Test Dates:	02/04/05
Through:	02/17/05
Report Date:	02/17/05
Expiration Date:	02/17/09

Project Summary: Architectural Testing, Inc. (ATI) was contracted by MI Windows and Doors, Inc., to witness testing on three Series/Model 740/3740 (Fin and Flange), aluminum single hung windows at MI Windows and Doors, Inc., test facility in Elizabethville, Pennsylvania. The samples tested successfully met the performance requirements for the following ratings: Test Specimen #1: H-R25 53 x 72; Test Specimen #2: H-R35 52 x 71; Test Specimen #3: H-R45 53 x 72. Test specimen description and results are reported herein.

Test Specification: The test specimens were evaluated in accordance with ANSI/AAMA/NWWDA 101/I.S.2-97, *Voluntary Specifications for Aluminum, Vinyl (PVC) and Wood Windows and Glass Doors.*

Test Specimen Description:

Series/Model: 740/3740 (Fin and Flange)

Product Type: Aluminum Single Hung (single glazed with 3/16" annealed glass)

Test Specimen #1: H-R25 53 x 72

Overall Size: 4' 4" wide by 5' 11-1/4" high

Interior Sash Size: 4' 2-7/8" wide by 2' 11-3/4" high

Fixed Daylight Opening Size: 4' 1-1/8" wide by 2' 8-3/4" high

Screen Size: 4' 2" wide by 2' 11-7/16" high

130 Derry Court
York, PA 17402-9405
phone: 717-764-7700
fax: 717-764-4129

Test Specimen Description: (Continued)

Test Specimen #2: H-R35 52 x 71

Overall Size: 4' 5" wide by 6' 0-1/4" high

Interior Sash Size: 4' 2-7/8" wide by 2' 11-3/4" high

Fixed Daylight Opening Size: 4' 1-1/8" wide by 2' 8-3/4" high

Screen Size: 4' 2" wide by 2' 11-7/16" high

Test Specimen #3: H-R45 53 x 72

Overall Size: 4' 5" wide by 6' 0-1/4" high

Interior Sash Size: 4' 2-7/8" wide by 2' 7-1/16" high

Fixed Daylight Opening Size: 4' 1-1/8" wide by 3' 1-1/2" high

Screen Size: 4' 2" wide by 2' 6-13/16" high

The following descriptions apply to all specimens.

Finish: All aluminum was white.

Glazing Details: The glazing consisted of a single sheet of 3/16" thick clear annealed glass. The glass was channel glazed with a flexible wrap around rubber gasket.

Weatherstripping:

Description	Quantity	Location
0.187" backed by 0.330" high polypile with center fin	1 Row	Fixed interlock
0.187" backed by 0.150" high polypile with center fin	1 Row	Fixed stiles and top rail
0.187" backed by 0.130" high polypile	1 Row	Operable sash stiles

Test Specimen Description: (Continued)

Weatherstripping:

Description	Quantity	Location
0.187" backed by 0.250" high polypile with center fin	1 Row	Operable sash stiles
0.187" backed by 0.375" diameter hollow vinyl bulb seal	1 Row	Bottom rail

Frame Construction: The frame was constructed of extruded aluminum. Corners were coped, butted, sealed with a foam pad and secured with two #8 x 5/8" long pan head screws.

The fixed meeting rail was attached to the frame with one #8 x 1/2" screw per end. The fixed sash stiles were attached to the frame with one #8 x 1/2" screw at the top of the stile.

Sash Construction: The operable sash was constructed of extruded aluminum. Corners were coped, butted, and fastened with one #8 x 5/8" long pan head screw. The fixed lite frame consisted of the fixed meeting rail and three extruded members that slid into the main frame jambs and head. The corners were coped and butted. The fixed top rail was attached to the stile with one #6 x 5/8" screw at each corner.

Screen Construction: All sash members were constructed of extruded aluminum. The corners were coped, butted, sealed, and fastened with one 5/8" screw through the jambs into the rails screw bosses.

Hardware:

Description	Quantity	Location
Metal cam lock	2	6-1/2" from ends of interior meeting rail attached with two #8 x 1/2" screws
Plastic tilt latch	2	Ends of interior meeting rail attached with one #8 x 1/2" screw and the sash corner screw
Spring loaded cast metal pivot bar	2	Ends of bottom rail staked in place
Spiral balance	2	One per jamb

Test Specimen Description: (Continued)

Drainage: A sloped sill was utilized on the window. The ends of the exterior vertical leg were cut 7/16" short to allow for drainage.

Reinforcement: No reinforcement was utilized.

Installation: The units were installed into a wood test buck. The flange units were fastened to the buck with #8 x 1-1/4" screws at the jambs, 5" from each end and one at midspan. The head utilized #8 x 3/4" pan head screws, 6" from each end and one at midspan. The exterior perimeter was sealed with silicone. The fin units were installed into a 2x8 #2 Spruce-Pine-Fir wood test buck utilizing 1-5/8" drywall screws located 3" from the corners and 10" on center around the nail-fin. The nail fin was bedded in silicone.

Test Results:

The results are tabulated as follows:

Paragraph	Title of Test - Test Method	Results	Allowed
Test Specimen #1: H-R25 53 x 72			
2.2.2.6.1	Operating Force	19 lbf	30 lbf max.
2.1.2	Air Infiltration per ASTM E 283 1.57 psf (25 mph)	0.11 cfm/ft^2	0.3 cfm/ft^2 max.

Note #1: *The tested specimen meets the performance levels specified in ANSI/AAMA/NWWDA 101/I.S.2-97 for air infiltration.*

2.1.3	Water Resistance per ASTM E 547 (with and without screen) 2.86 psf	No leakage	No leakage
2.1.4.1	Uniform Load Deflection per ASTM E 330 (Deflections reported were taken on the meeting rail) (Loads were held for 52 seconds)		
	15.0 psf (positive)	0.38"	See Note #2
	15.0 psf (negative)	0.33"	See Note #2

Note #2: *The Uniform Load Deflection test is not a requirement of ANSI/AAMA/NWWDA 101/I.S.2-97 for this product designation. The deflection data is recorded in this report for special code compliance and information only.*

Test Results: (Continued)

Paragraph	Title of Test - Test Method	Results	Allowed
Test Specimen #1: H-R25 53 x 72 (Continued)			
2.1.4.2	Uniform Load Structural per ASTM E 330		
	(Permanent sets reported were taken on the meeting rail)		
	(Loads were held for 10 seconds)		
	22.5 psf (positive)	<0.01"	0.20" max.
	22.5 psf (negative)	<0.01"	0.20" max.
2.2.2.6.2	Deglazing Test per ASTM E 987		
	In operating direction - 70 lbs		
	Interior meeting rail	0.12"/24%	0.50"/100%
	Bottom rail	0.13"/26%	0.50"/100%
	In remaining direction - 50 lbs		
	Left stile	0.09"/18%	0.50"/100%
	Right stile	0.09"/18%	0.50"/100%
2.1.8	Forced Entry Resistance per ASTM F 588		
	Type: A	Grade: 10	
	Lock Manipulation Test	No entry	No entry
	Test A1 through A5	No entry	No entry
	Test A7	No entry	No entry
	Lock Manipulation Test	No entry	No entry
Optional Performance			
4.3	Water Resistance per ASTM E 547		
	(with and without screen)		
	6.75 psf	No leakage	No leakage
4.4.1	Uniform Load Deflection per ASTM E 330		
	(Deflections reported were taken on the meeting rail)		
	(Loads were held for 52 seconds)		
	25.9 psf (positive)	0.52"	See Note #2
	34.7 psf (negative)	0.75"	See Note #2

Test Results: (Continued)

Paragraph	Title of Test - Test Method	Results	Allowed
Test Specimen #1: H-R25 53 x 72 (Continued)			
Optional Performance: (Continued)			
4.4.2	Uniform Load Structural per ASTM E 330 (Permanent sets reported were taken on the meeting rail) (Loads were held for 10 seconds)		
	45.6 psf (positive)	0.03"	0.20" max.
	52.1 psf (negative)	0.01"	0.20" max.
Test Specimen #2: H-R35 52 x 71			
2.2.2.6.1	Operating Force	20 lbf	30 lbf max.
2.1.2	Air Infiltration per ASTM E 283		
	1.57 psf (25 mph)	0.12 cfm/ft^2	0.3 cfm/ft^2 max.

Note #1: *The tested specimen meets the performance levels specified in ANSI/AAMA/NWWDA 101/I.S.2-97 for air infiltration.*

2.1.3	Water Resistance per ASTM E 547 (with and without screen)		
	2.86 psf	No leakage	No leakage
2.1.4.1	Uniform Load Deflection per ASTM E 330 (Deflections reported were taken on the meeting rail) (Loads were held for 52 seconds)		
	15.0 psf (positive)	N/A	See Note #3
	15.0 psf (negative)	N/A	See Note #3
2.1.4.2	Uniform Load Structural per ASTM E 330 (Permanent sets reported were taken on the meeting rail) (Loads were held for 10 seconds)		
	22.5 psf (positive)	N/A	See Note #3
	22.5 psf (negative)	N/A	See Note #3

Note #3: *The client opted to start at a pressure higher than the minimum required. Those results are reported under "Optional Performance".*

Test Results: (Continued)

Paragraph	Title of Test - Test Method	Results	Allowed
Test Specimen #2: H-R35 52 x 71 (Continued)			
2.2.2.6.2	Deglazing Test per ASTM E 987		
	In operating direction - 70 lbs		
	Interior meeting rail	0.12"/24%	0.50"/100%
	Bottom rail	0.13"/26%	0.50"/100%
	In remaining direction - 50 lbs		
	Left stile	0.09"/18%	0.50"/100%
	Right stile	0.09"/18%	0.50"/100%
2.1.8	Forced Entry Resistance per ASTM F 588		
	Type: A	Grade: 10	
	Lock Manipulation Test	No entry	No entry
	Test A1 through A5	No entry	No entry
	Test A7	No entry	No entry
	Lock Manipulation Test	No entry	No entry
Optional Performance			
4.3	Water Resistance per ASTM E 547 (with and without screen)		
	6.75 psf	No leakage	No leakage
4.4.1	Uniform Load Deflection per ASTM E 330 (Deflections reported were taken on the meeting rail) (Loads were held for 52 seconds)		
	35.3 psf (positive)	0.72"	See Note #2
	47.2 psf (negative)	1.13"	See Note #2
4.4.2	Uniform Load Structural per ASTM E 330 (Permanent sets reported were taken on the meeting rail) (Loads were held for 10 seconds)		
	53.0 psf (positive)	0.08"	0.20" max.
	70.8 psf (negative)	0.08"	0.20" max.

Test Results: (Continued)

Paragraph	Title of Test - Test Method	Results	Allowed
Test Specimen #3: H-R45 53 x 72			
Optional Performance			
4.4.1	Uniform Load Deflection per ASTM E 330		
	(Deflections reported were taken on the meeting rail)		
	(Loads were held for 52 seconds)		
	45.0 psf (positive)	1.20"	See Note #2
	47.2 psf (negative)	1.05"	See Note #2
4.4.2	Uniform Load Structural per ASTM E 330		
	(Permanent sets reported were taken on the meeting rail)		
	(Loads were held for 10 seconds)		
	67.5 psf (positive)	0.15"	0.20" max.
	70.8 psf (negative)	0.05"	0.20" max.

Detailed drawings, representative samples of the test specimen, and a copy of this report will be retained by ATI for a period of four years from the original test date. The above results were secured by using the designated test methods and they indicate compliance with the performance requirements of the above referenced specification. This report does not constitute certification of this product, which may only be granted by the certification program administrator. This report may not be reproduced, except in full, without approval of Architectural Testing, Inc.

For ARCHITECTURAL TESTING, INC:

Digitally Signed by: Jeramie D. Grabosch

Jeramie D. Grabosch
Technician

Digitally Signed by: Steven M. Urich

Steven M. Urich, P.E.
Senior Project Engineer

JDG:jdg/vlm

Architectural Testing

ANSI/AAMA/NWWDA 101/I.S.2-97
TEST REPORT

Rendered to:

MI WINDOWS AND DOORS, INC.

SERIES/MODEL: 680
PRODUCT TYPE: Aluminum Horizontal Sliding Window (Fin Frame)

	Summary of Results		
Title	**Test Specimen #1**	**Test Specimen #2**	**Test Specimen #3**
Rating	HS-R30 126 x 59	HS-R40 71 x 59	HS-R35* 52 x 59
Operating Force	14 lbf max.	N/A	N/A
Air Infiltration	0.12 cfm/ft^2	N/A	N/A
Water Resistance Test Pressure	6.0 psf	N/A	N/A
Uniform Load Deflection Test Pressure	±30.0 psf	+40.0 psf/-40.7 psf	+35.3 psf/-50.0 psf
Uniform Load Structural Test Pressure	±45.0 psf	+60.0 psf/-61.1 psf	+53.0 psf/-75.0 psf
Forced Entry Resistance	Grade 10	N/A	N/A

Reference should be made to ATI Report No. 53194.01-122-47 for complete test specimen description and data.

130 Derry Court
York, PA 17402-9405
phone: 717-764-7700
fax: 717-764-4129

Architectural Testing

ANSI/AAMA/NWWDA 101/I.S.2-97 TEST REPORT

Rendered to:

MI WINDOWS AND DOORS, INC.
P.O. Box 370
Gratz, Pennsylvania 17030-0370

Report No.:	53194.01-122-47
Test Dates:	08/30/04
Through:	09/02/04
Report Date:	09/14/04
Expiration Date:	09/02/08

Project Summary: Architectural Testing, Inc. (ATI) was contracted by MI Windows and Doors, Inc. to witness testing on three Series/Model 680, aluminum horizontal sliding windows at MI Windows and Doors, Inc. test facility in Elizabethville, Pennsylvania. The samples tested successfully met the performance requirements for the following ratings: Test Specimen #1: HS-R30 126 x 59; Test Specimen #2: HS-R40 71 x 59; Test Specimen #3: HS-R35* 52 x 59. Test specimen description and results are reported herein.

***General Note**: An asterisk (*) next to the performance grade indicates that the size tested for optional performance was smaller than the Gateway test size for the product type and class.*

Test Specification: The test specimens were evaluated in accordance with ANSI/AAMA/NWWDA 101/I.S.2-97, *Voluntary Specifications for Aluminum, Vinyl (PVC) and Wood Windows and Glass Doors.*

Test Specimen Description:

Series/Model: 680

Product Type: Aluminum Horizontal Sliding Window (Fin Frame)

Test Specimen #1: HS-R30 126 x 59 (XOX)

Overall Size: 10' 5-5/8" wide by 4' 11-1/16" high

Interior Sash Size (2): 2' 7" wide by 4' 8-3/8" high

Daylight Opening Size: 4' 11-3/4" wide by 4' 5-5/8" high

Screen Size: 2' 5-3/4" wide by 4' 7-1/8" high

130 Derry Court
York, PA 17402-9405
phone: 717-764-7700
fax: 717-764-4129

Test Specimen Description: (Continued)

Test Specimen #2: HS-R40 71 x 59 (XO)

Overall Size: 5' 11-3/8" wide by 4' 11" high

Interior Sash Size: 2' 11-1/2" wide by 4' 8-1/4" high

Daylight Opening Size: 2' 10-1/4" wide by 4' 5-3/4" high

Screen Size: 2' 10-1/2" wide by 4' 7-1/8" high

Test Specimen #3: HS-R35* 52 x 59 (XO)

Overall Size: 4' 4-1/8" wide by 4' 11" high

Interior Sash Size: 2' 1-7/8" wide by 4' 8-1/4" high

Daylight Opening Size: 1' 10-1/2" wide by 4' 5-3/4" high

Screen Size: 2' 0-1/2" wide by 4' 7-1/8" high

The following descriptions apply to all specimens.

Finish: All aluminum was anodized.

Glazing Details: The sash utilized a single sheet of 1/8" thick, clear annealed glass. The sash were interior glazed onto double-sided adhesive foam tape and secured with PVC snap-in glazing beads.

Weatherstripping:

Description	Quantity	Location
0.230" high by 0.187" backed polypile with center fin	1 Row	Fixed meeting stile, rails
0.230" high by 0.187" backed polypile with center fin	2 Rows	Stiles

Frame Construction: The frame was constructed of extruded aluminum. The corners were coped, butted, sealed, and secured with two #6 by 1" screws through the jambs into the head and sill screw boss. The fixed meeting stile was secured utilizing end caps. The end caps were secured to the fixed meeting stile with two #6 by 3/4" self-tapping screws through the end caps into the fixed meeting stiles screw boss. The end caps were secured with two #6 by 3/4" self-tapping screws into the head and sill. The head and sill also utilized a snap-in PVC insert.

Test Specimen Description: (Continued)

Sash Construction: The sash was constructed of extruded aluminum. The corners were coped, butted, and secured with one #6 by 1" screw through the rail into the stiles screw boss. The jamb stile was thermally broken.

Screen Construction: The screen was constructed of roll-formed aluminum with keyed corners. The screening consisted of a fiberglass mesh and was secured with a flexible vinyl spline.

Hardware:

Description	Quantity	Location
Metal cam locks	2 per sash	10" from rails on locking stile
Roller assembly	2 per sash	1-1/2" from bottom rail ends
Screen plungers	4 per screen	2-1/2" from each rail on stiles

Drainage:

Description	Quantity	Location
1/4" wide by 1-1/4" long weephole with cover	2	3-1/2" from jambs on sill face

Reinforcement: No reinforcement was utilized.

Installation: The windows were installed into a #2 Spruce-Pine-Fir wood buck. The nail fin was back bedded in silicone and secured with #8 by 1-5/8" drywall screws located 2" from corners and 9" on center. The exterior perimeter was sealed with silicone.

Test Results: The results are tabulated as follows:

Paragraph	Title of Test - Test Method	Results	Allowed
Test Specimen #1: HS-R30 126 x 59 (XOX)			
2.2.2.5.1	Operating Force	14 lbf	20 lbf max.
2.1.2	Air Infiltration per ASTM E 283 1.57 psf (25 mph)	0.12 cfm/ft^2	0.30 cfm/ft^2 max.

Note #1: *The tested specimen meets the performance levels specified in ANSI/AAMA/NWWDA 101/I.S.2-97 for air infiltration.*

Test Results: (Continued)

Paragraph	Title of Test - Test Method	Results	Allowed
Test Specimen #1: HS-R30 126 x 59 (XOX) (Continued)			
2.1.3	Water Resistance per ASTM E 547 (with and without screen) 2.86 psf	No leakage	No leakage
2.1.4.1	Uniform Load Deflection per ASTM E 330 (Deflections reported were taken on the meeting stile) (Loads were held for 52 seconds)		
	15.0 psf (positive)	0.37"	See Note #2
	15.0 psf (negative)	0.39"	See Note #2

***Note #2**: The Uniform Load Deflection test is not a requirement of ANSI/AAMA/NWWDA 101/I.S.2-97 for this product designation. The deflection data is recorded in this report for special code compliance and information only.*

2.1.4.2	Uniform Load Structural per ASTM E 330 (Permanent sets reported were taken on the meeting stile) (Loads were held for 10 seconds)		
	22.5 psf (positive)	0.03"	0.21" max.
	22.5 psf (negative)	0.01"	0.21" max.
2.2.2.5.2	Deglazing Test per ASTM E 987 In operating direction - 70 lbs		
	Right sash, lock stile	0.13"/25%	0.50"/100%
	Right sash, jamb stile	0.13"/25%	0.50"/100%
	Left sash, lock stile	0.13"/25%	0.50"/100%
	Left sash, jamb stile	0.13"/25%	0.50"/100%
	In remaining direction - 50 lbs		
	Right sash, top rail	0.06"/13%	0.50"/100%
	Right sash, bottom rail	0.06"/13%	0.50"/100%
	Left sash, top rail	0.06"/13%	0.50"/100%
	Left sash, bottom rail	0.06"/13%	0.50"/100%

Test Results: (Continued)

Paragraph	Title of Test - Test Method	Results	Allowed
Test Specimen #1: HS-R30 126 x 59 (XOX) (Continued)			
2.1.8	Forced Entry Resistance per ASTM F 588		
	Type: A	Grade: 10	
	Lock Manipulation Test	No entry	No entry
	Test A1 through A5	No entry	No entry
	Test A7	No entry	No entry
	Lock Manipulation Test	No entry	No entry
Optional Performance			
4.3	Water Resistance per ASTM E 547 (with and without screen) 6.0 psf	No leakage	No leakage
4.4.1	Uniform Load Deflection per ASTM E 330 (Deflections reported were taken on the meeting stile) (Loads were held for 52 seconds)		
	30.0 psf (positive)	0.77"	See Note #2
	30.0 psf (negative)	0.58"	See Note #2
4.4.2	Uniform Load Structural per ASTM E 330 (Permanent sets reported were taken on the meeting stile) (Loads were held for 10 seconds)		
	45.0 psf (positive)	0.08"	0.21" max.
	45.0 psf (negative)	0.10"	0.21" max.

Test Results: (Continued)

Paragraph	Title of Test - Test Method	Results	Allowed
Test Specimen #2: HS-R40 71 x 59 (XO)			
Optional Performance			
4.4.1	Uniform Load Deflection per ASTM E 330		
	(Deflections reported were taken on the meeting stile)		
	(Loads were held for 52 seconds)		
	40.0 psf (positive)	0.86"	See Note #2
	40.7 psf (negative)	0.72"	See Note #2
4.4.2	Uniform Load Structural per ASTM E 330		
	(Permanent sets reported were taken on the meeting stile)		
	(Loads were held for 10 seconds)		
	60.0 psf (positive)	0.05"	0.22" max.
	61.1 psf (negative)	0.10"	0.22" max.
Test Specimen #3: HS-R35* 52 x 59			
Optional Performance			
4.4.1	Uniform Load Deflection per ASTM E 330		
	(Deflections reported were taken on the meeting stile)		
	(Loads were held for 52 seconds)		
	35.3 psf (positive)	0.48"	See Note #2
	50.0 psf (negative)	0.71"	See Note #2
4.4.2	Uniform Load Structural per ASTM E 330		
	(Permanent sets reported were taken on the meeting stile)		
	(Loads were held for 10 seconds)		
	53.0 psf (positive)	0.10"	0.22" max.
	75.0 psf (negative)	0.07"	0.22" max.

Detailed drawings, representative samples of the test specimen, and a copy of this report will be retained by ATI for a period of four years from the original test date. The above results were secured by using the designated test methods and they indicate compliance with the performance requirements of the above referenced specification. This report does not constitute certification of this product, which may only be granted by the certification program administrator. This report may not be reproduced, except in full, without approval of Architectural Testing, Inc.

For ARCHITECTURAL TESTING, INC:

Digitally Signed by: Mark A. Hess

Mark A. Hess
Technician

Digitally Signed by: Steven M. Urich

Steven M. Urich, P.E.
Senior Project Engineer

MAH:vlm

TAMKO®
ROOFING PRODUCTS

January 31, 2002

TO: OUR FLORIDA CUSTOMERS:

Effective February 1, 2002, the following TAMKO shingles, as manufactured at TAMK s Tuscaloosa, Alabama, facility, comply with ASTM D-3161, Type I modified to 110 mph. esting was conducted using four nails per shingle. These shingles also comply with Florida Buil ng Code TAS 100 for wind driven rain.

- Glass-Seal AR
- Elite Glass-Seal AR
- ASTM Heritage 30 AR (formerly ASTM Heritage 25 AR)
- Heritage 40 AR (formerly Heritage 30 AR)
- Heritage 50 AR (formerly Heritage 40 AR)

All testing was performed by Florida State certified independent labs.

Please direct all questions to TAMKO's Technical Services Department at 1-800-641-46

TAMKO Roofing Products, Inc.

2300 35th STREET P.O. BOX 2149 TUSCALOOSA, AL 35403-2149 205-752-3555 FAX 205-349-2049

Alpine Engineered Products, Inc.

1950 Marley Drive Haines City, FL 33844
Florida Engineering Certificate of Authorization Number: 567
Florida Certificate of Product Approval # FL1999
 Document ID:1SRC487-Z0117094806

Truss Fabricator: Anderson Truss Company
Job Identification: 5-434-MIKE STALVEY
Truss Count: 33
Model Code: Florida Building Code
Truss Criteria: ANSI/TPI-2002(STD)/FBC
Engineering Software: Alpine Software,Version 7.04.
Structural Engineer of Record:
Address:
Minimum Design Loads: Roof - 40.0 PSF @ 1.25 Duration
Floor - N/A
Wind - 110 MPH ASCE 7-98 -Closed

Seal Date: 10/17/2005

-Truss Design Engineer-
Arthur R. Fisher
Florida License Number: 59687
1950 Marley Drive
Haines City, FL 33844

Notes:

1. Determination as to the suitability of these truss components for the structure is the responsibility of the building designer/engineer of record, as defined in ANSI/TPI 1
2. The drawing date shown on this index sheet must match the date shown on the individual truss component drawing.
3. As shown on attached drawings; the drawing number is preceded by: HCUSR487

Details: BRCLBSUB

#	Ref Description	Drawing#	Date
1	03808--A	05290008	10/17/05
2	03809--AGE1	05288030	10/15/05
3	03810--A1	05290009	10/17/05
4	03811--AR1	05290010	10/17/05
5	03812--AGE	05288026	10/15/05
6	03813--AR	05288027	10/15/05
7	03814--AV	05288028	10/15/05
8	03815--AVS	05288003	10/15/05
9	03816--AV-1	05288015	10/15/05
10	03817--BS	05288021	10/15/05
11	03818--BGE	05288001	10/15/05
12	03819--BGES	05288029	10/15/05
13	03820--B	05288011	10/15/05
14	03821--C	05288013	10/15/05
15	03822--DO	05288009	10/15/05
16	03823--DOV	05288014	10/15/05
17	03824--DOG	05288007	10/15/05
18	03825--DOVG	05288012	10/15/05
19	03826--G-1	05288002	10/15/05
20	03827--CJ1	05288019	10/15/05
21	03828--HJ7	05288016	10/15/05
22	03829--CJ3	05288018	10/15/05
23	03830--CJ5	05288017	10/15/05
24	03831--EJ7	05288020	10/15/05
25	03832--M	05288022	10/15/05
26	03833--H7M	05288008	10/15/05
27	03834--M-1	05288005	10/15/05
28	03835--M-2	05288006	10/15/05
29	03836--M1	05288010	10/15/05
30	03837--MGE	05288004	10/15/05
31	03838--AVP	05288023	10/15/05
32	03839--AVSP	05288024	10/15/05
33	03840--AP	05288025	10/15/05

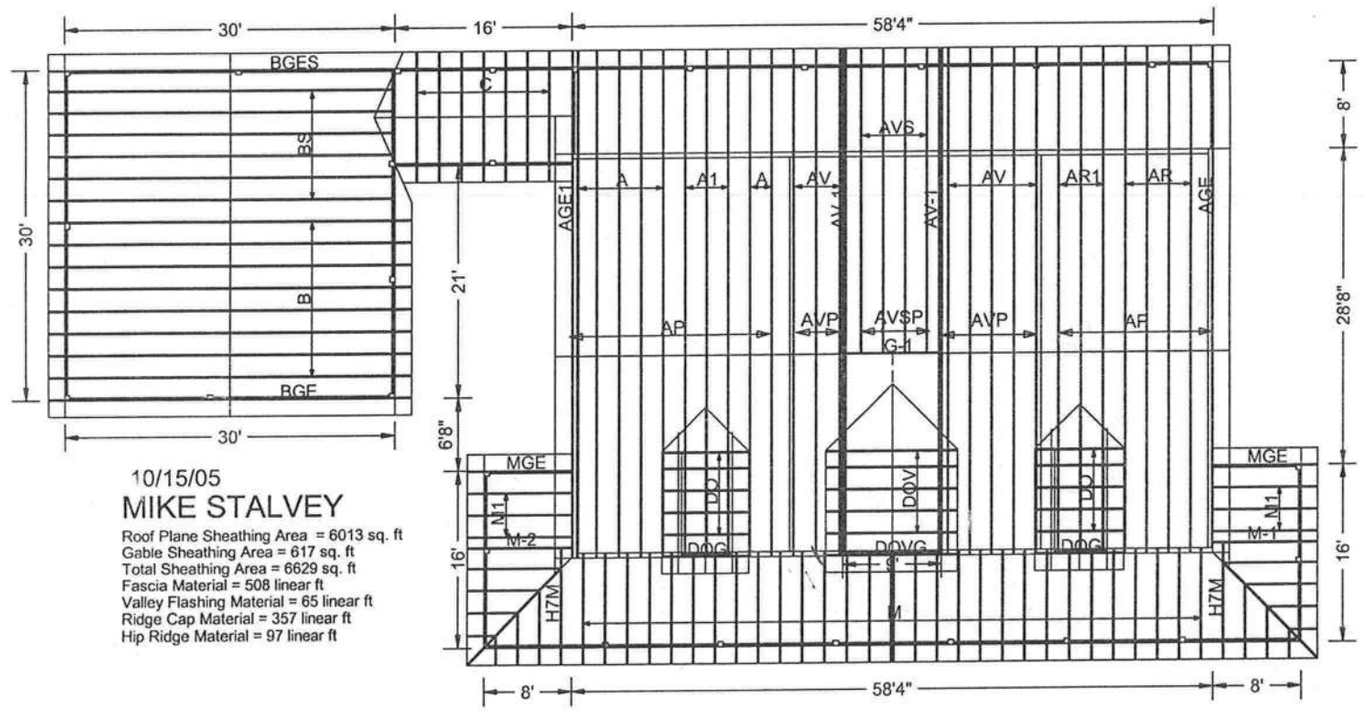

10/15/05

MIKE STALVEY

Roof Plane Sheathing Area = 6013 sq. ft
Gable Sheathing Area = 617 sq. ft
Total Sheathing Area = 6629 sq. ft
Fascia Material = 508 linear ft
Valley Flashing Material = 65 linear ft
Ridge Cap Material = 357 linear ft
Hip Ridge Material = 97 linear ft

Scale: 1/16" = 1'

758-8954
623-0920

JOB NO: 5-434	PAGE NO: 1 OF 1

(5-454-MIKE STALVEY - A)

Top chord 2x4 SP #2 Dense
Bot chord 2x4 SP #2 Dense
Webs 2x4 SP #3 :W1 2x6 SP #2:

(A) Continuous lateral bracing equally spaced on member.

Deflection meets L/360 live and L/240 total load.

110 mph wind, 13.22 ft mean hgt, ASCE 7-98, CLOSED bldg, Located anywhere in roof, CAT II, EXP B, wind TC DL=5.0 psf, wind BC DL=5.0 psf.

Right end vertical not exposed to wind pressure.

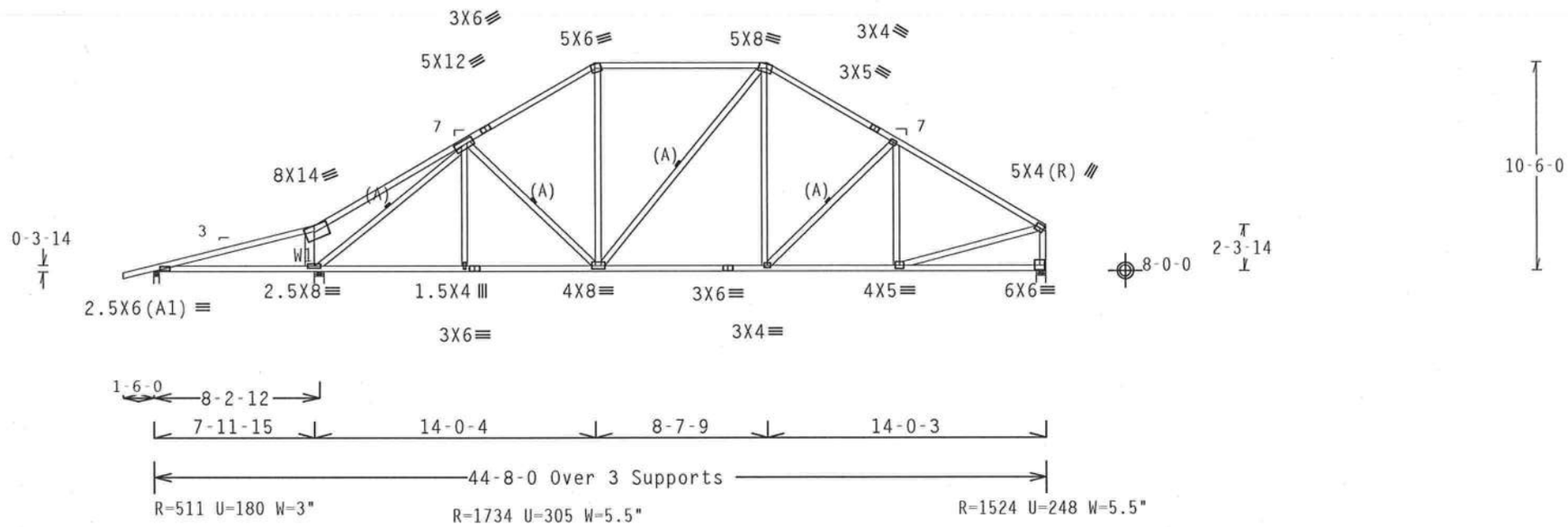

Design Crit: TPI-2002(STD)/FBC
Cq/RT=1.00(1.25)/10(0) 7.04.00

PLT TYP. Wave

QTY:7 FL/-/3/-/-/R/- Scale =.125"/Ft.

ALPINE
Alpine Engineered Products, Inc.
1950 Marley Drive
Haines City, FL 33844
FL Certificate of Authorization # 567

WARNING TRUSSES REQUIRE EXTREME CARE IN FABRICATION, HANDLING, SHIPPING, INSTALLING AND BRACING. REFER TO BCSI 1-03 (BUILDING COMPONENT SAFETY INFORMATION), PUBLISHED BY TPI (TRUSS PLATE INSTITUTE, 583 D'ONOFRIO DR., SUITE 200, MADISON, WI 53719) AND WTCA (WOOD TRUSS COUNCIL OF AMERICA, 6300 ENTERPRISE LN, MADISON, WI 53719) FOR SAFETY PRACTICES PRIOR TO PERFORMING THESE FUNCTIONS. UNLESS OTHERWISE INDICATED, TOP CHORD SHALL HAVE PROPERLY ATTACHED STRUCTURAL PANELS AND BOTTOM CHORD SHALL HAVE A PROPERLY ATTACHED RIGID CEILING.

IMPORTANT FURNISH A COPY OF THIS DESIGN TO THE INSTALLATION CONTRACTOR. ALPINE ENGINEERED PRODUCTS, INC. SHALL NOT BE RESPONSIBLE FOR ANY DEVIATION FROM THIS DESIGN; ANY FAILURE TO BUILD THE TRUSS IN CONFORMANCE WITH TPI; OR FABRICATING, HANDLING, SHIPPING, INSTALLING & BRACING OF TRUSSES. DESIGN CONFORMS WITH APPLICABLE PROVISIONS OF NDS (NATIONAL DESIGN SPEC, BY AF&PA) AND TPI. ALPINE CONNECTOR PLATES ARE MADE OF 20/18/16GA (W,H/S/K) ASTM A653 GRADE 40/60 (W, K/H,S) GALV. STEEL. APPLY PLATES TO EACH FACE OF TRUSS AND, UNLESS OTHERWISE LOCATED ON THIS DESIGN, POSITION PER DRAWINGS 160A-Z. ANY INSPECTION OF PLATES FOLLOWED BY (1) SHALL BE PER ANNEX A3 OF TPI1-2002 SEC.3. A SEAL ON THIS DRAWING INDICATES ACCEPTANCE OF PROFESSIONAL ENGINEERING RESPONSIBILITY SOLELY FOR THE TRUSS COMPONENT DESIGN SHOWN. THE SUITABILITY AND USE OF THIS COMPONENT FOR ANY BUILDING IS THE RESPONSIBILITY OF THE BUILDING DESIGNER PER ANSI/TPI 1 SEC. 2.

ARTHUR R. FISHER
LICENSE
No. 59687
STATE OF FLORIDA
PROFESSIONAL ENGINEER
Oct 17 '05

TC LL	20.0 PSF	REF	R487-- 3808
TC DL	10.0 PSF	DATE	10/17/05
BC DL	10.0 PSF	DRW	HCUSR487 05290008
BC LL	0.0 PSF	HC-ENG	JB/AF
TOT.LD.	40.0 PSF	SEQN-	45289
DUR.FAC.	1.25		
SPACING	24.0"	JREF-	1SRC487_Z01

Top chord 2x4 SP #2 Dense
Bot chord 2x4 SP #2 Dense
Webs 2x4 SP #3

SPECIAL LOADS
------(LUMBER DUR.FAC.=1.25 / PLATE DUR.FAC.=1.25)

TC - From	83 PLF	at -1.50	to	83 PLF	at 8.00
TC - From	85 PLF	at 8.00	to	85 PLF	at 22.02
TC - From	83 PLF	at 22.02	to	83 PLF	at 30.65
TC - From	85 PLF	at 30.65	to	85 PLF	at 44.67
BC - From	4 PLF	at -1.50	to	4 PLF	at 0.00
BC - From	20 PLF	at 0.00	to	20 PLF	at 44.67

THE BUILDING DESIGNER IS RESPONSIBLE FOR THE DESIGN OF THE ROOF AND CEILING DIAPHRAGMS, GABLE END SHEAR WALLS, AND SUPPORTING SHEAR WALLS. SHEAR WALLS MUST PROVIDE CONTINUOUS LATERAL RESTRAINT TO THE GABLE END. ALL CONNECTIONS TO BE DESIGNED BY THE BUILDING DESIGNER.

(**) 2 plate(s) require special positioning. Refer to scaled plate plot details for special positioning requirements.

110 mph wind, 13.05 ft mean hgt, ASCE 7-98, CLOSED bldg, Located anywhere in roof, CAT II, EXP B, wind TC DL=5.0 psf, wind BC DL=5.0 psf.

See DWGS A11015EC1103 & GBLLETIN0405 for more requirements.

(A) Continuous lateral bracing equally spaced on member.

Deflection meets L/360 live and L/240 total load.

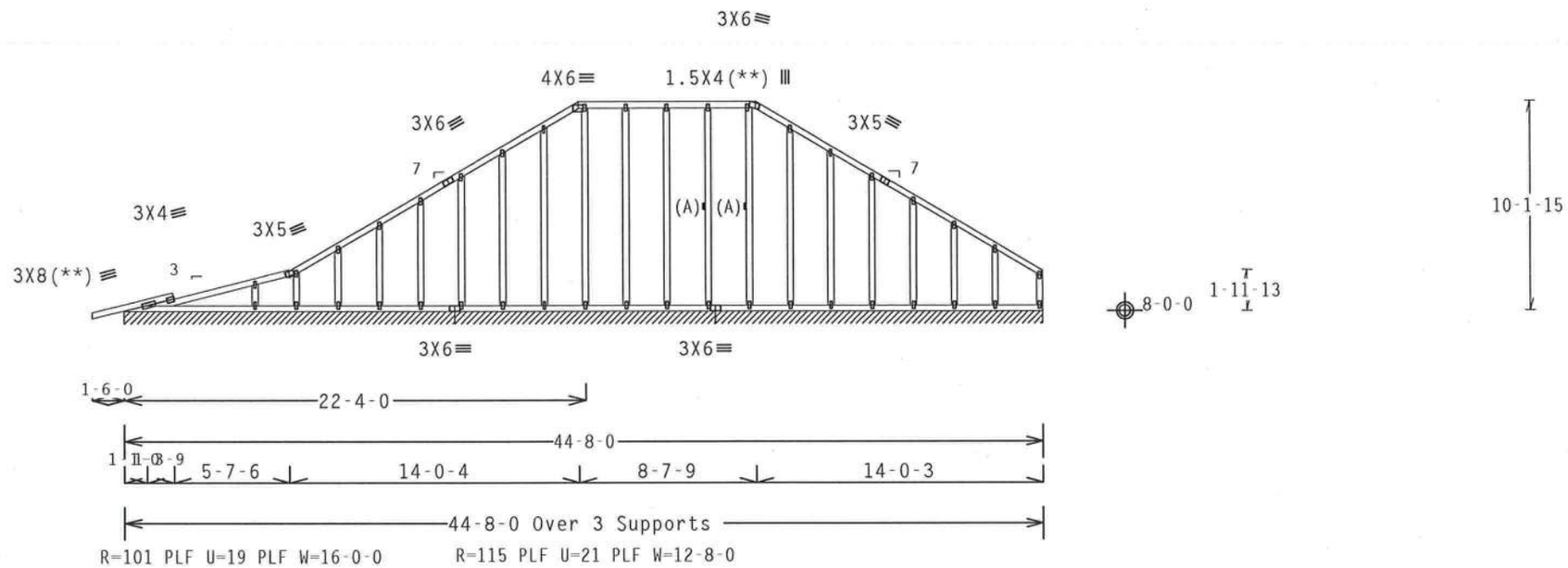

Note: All Plates Are 1.5X4 Except As Shown.

Design Crit: TPI-2002(STD)/FBC

PLT TYP. Wave — Cq/RT=1.00(1.25)/10(0) 7.04.0 — QTY:1 — FL/-/3/-/-/R/- — Scale =.125"/Ft.

ALPINE
Alpine Engineered Products, Inc.
1950 Marley Drive
Haines City, FL 33844
FL Certificate of Authorization # 567

WARNING TRUSSES REQUIRE EXTREME CARE IN FABRICATION, HANDLING, SHIPPING, INSTALLING AND BRACING. REFER TO BCSI 1-03 (BUILDING COMPONENT SAFETY INFORMATION), PUBLISHED BY TPI (TRUSS PLATE INSTITUTE, 583 D'ONOFRIO DR., SUITE 200, MADISON, WI 53719) AND WTCA (WOOD TRUSS COUNCIL OF AMERICA, 6300 ENTERPRISE LN, MADISON, WI 53719) FOR SAFETY PRACTICES PRIOR TO PERFORMING THESE FUNCTIONS. UNLESS OTHERWISE INDICATED, TOP CHORD SHALL HAVE PROPERLY ATTACHED STRUCTURAL PANELS AND BOTTOM CHORD SHALL HAVE A PROPERLY ATTACHED RIGID CEILING.

IMPORTANTFURNISH A COPY OF THIS DESIGN TO THE INSTALLATION CONTRACTOR. ALPINE ENGINEERED PRODUCTS, INC. SHALL NOT BE RESPONSIBLE FOR ANY DEVIATION FROM THIS DESIGN; ANY FAILURE TO BUILD THE TRUSS IN CONFORMANCE WITH TPI; OR FABRICATING, HANDLING, SHIPPING, INSTALLING & BRACING OF TRUSSES. DESIGN CONFORMS WITH APPLICABLE PROVISIONS OF NDS (NATIONAL DESIGN SPEC, BY AF&PA) AND TPI. ALPINE CONNECTOR PLATES ARE MADE OF 20/18/16GA (W,H/S/K) ASTM A653 GRADE 40/60 (W, K/H,S) GALV. STEEL. APPLY PLATES TO EACH FACE OF TRUSS AND, UNLESS OTHERWISE LOCATED ON THIS DESIGN, POSITION PER DRAWINGS 160A-Z. ANY INSPECTION OF PLATES FOLLOWED BY (1) SHALL BE PER ANNEX A3 OF TPI1-2002 SEC.3. A SEAL ON THIS DRAWING INDICATES ACCEPTANCE OF PROFESSIONAL ENGINEERING RESPONSIBILITY SOLELY FOR THE TRUSS COMPONENT DESIGN SHOWN. THE SUITABILITY AND USE OF THIS COMPONENT FOR ANY BUILDING IS THE RESPONSIBILITY OF THE BUILDING DESIGNER PER ANSI/TPI 1 SEC. 2.

ARTHUR R. FISHER
LICENSE
No. 59687
STATE OF FLORIDA
PROFESSIONAL ENGINEER
Oct 05

TC LL	20.0 PSF	REF	R487-- 3809
TC DL	10.0 PSF	DATE	10/15/05
BC DL	10.0 PSF	DRW	HCUSR487 05288030
BC LL	0.0 PSF	HC-ENG	DF/AF
TOT.LD.	40.0 PSF	SEQN-	13494
DUR.FAC.	1.25		
SPACING	SEE ABOVE	JREF-	1SRC487_Z01

(5-434-MIKE STALVEY - A1)

Top chord 2x4 SP #2 Dense
Bot chord 2x4 SP #2 Dense
Webs 2x4 SP #3 :W1 2x6 SP #2:

SPECIAL LOADS
------(LUMBER DUR.FAC.=1.25 / PLATE DUR.FAC.=1.25)

TC - From	61	PLF at	-1.50 to	61	PLF at	8.00
TC - From	63	PLF at	8.00 to	63	PLF at	22.02
TC - From	61	PLF at	22.02 to	61	PLF at	30.65
TC - From	63	PLF at	30.65 to	63	PLF at	34.18
TC - From	218	PLF at	34.18 to	308	PLF at	44.67
BC - From	4	PLF at	-1.50 to	4	PLF at	0.00
BC - From	20	PLF at	0.00 to	20	PLF at	44.67

110 mph wind, 13.22 ft mean hgt, ASCE 7-98, CLOSED bldg, Located anywhere in roof, CAT II, EXP B, wind TC DL=5.0 psf, wind BC DL=5.0 psf.

Right end vertical not exposed to wind pressure.

(A) Continuous lateral bracing equally spaced on member.

Deflection meets L/360 live and L/240 total load.

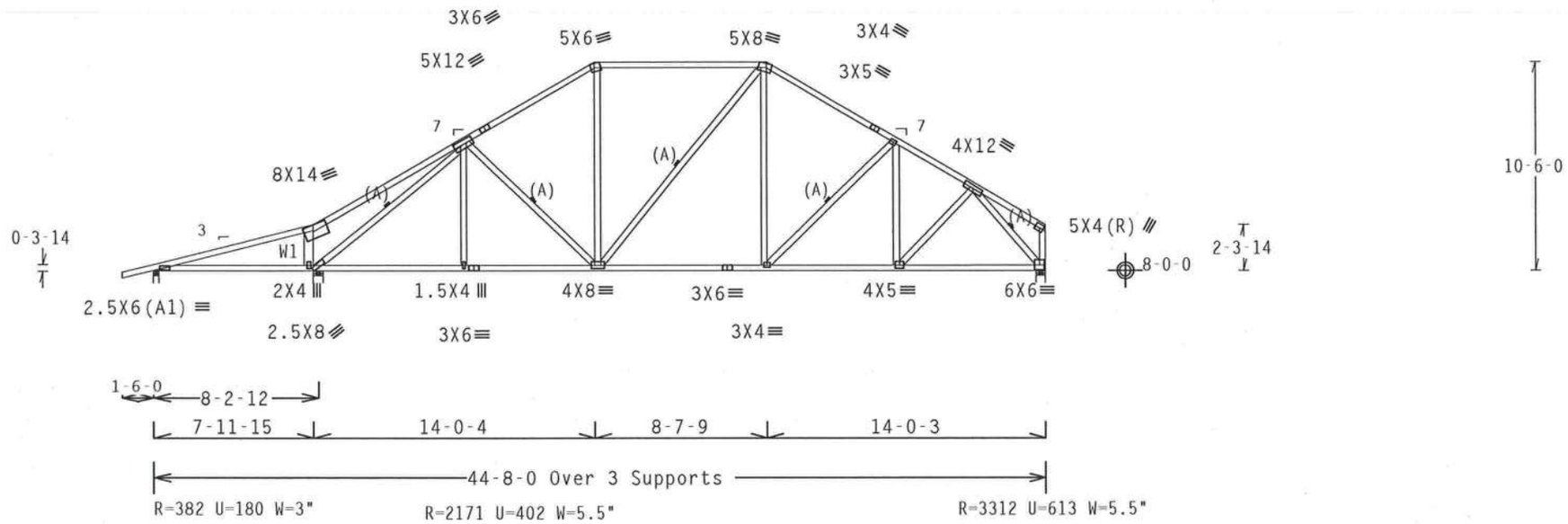

Design Crit: TPI-2002(STD)/FBC
PLT TYP. Wave Cq/RT=1.00(1.25)/10(0) 7.04.08 QTY:3 FL/-/3/-/-/R/- Scale =.125"/Ft.

ALPINE
Alpine Engineered Products, Inc.
1950 Marley Drive
Haines City, FL 33844
FL Certificate of Authorization # 567

WARNING TRUSSES REQUIRE EXTREME CARE IN FABRICATION, HANDLING, SHIPPING, INSTALLING AND BRACING. REFER TO BCSI 1-03 (BUILDING COMPONENT SAFETY INFORMATION), PUBLISHED BY TPI (TRUSS PLATE INSTITUTE, 583 D'ONOFRIO DR., SUITE 200, MADISON, WI 53719) AND WTCA (WOOD TRUSS COUNCIL OF AMERICA, 6300 ENTERPRISE LN, MADISON, WI 53719) FOR SAFETY PRACTICES PRIOR TO PERFORMING THESE FUNCTIONS. UNLESS OTHERWISE INDICATED, TOP CHORD SHALL HAVE PROPERLY ATTACHED STRUCTURAL PANELS AND BOTTOM CHORD SHALL HAVE A PROPERLY ATTACHED RIGID CEILING.

IMPORTANTFURNISH A COPY OF THIS DESIGN TO THE INSTALLATION CONTRACTOR. ALPINE ENGINEERED PRODUCTS, INC. SHALL NOT BE RESPONSIBLE FOR ANY DEVIATION FROM THIS DESIGN; ANY FAILURE TO BUILD THE TRUSS IN CONFORMANCE WITH TPI; OR FABRICATING, HANDLING, SHIPPING, INSTALLING & BRACING OF TRUSSES. DESIGN CONFORMS WITH APPLICABLE PROVISIONS OF NDS (NATIONAL DESIGN SPEC. BY AF&PA) AND TPI. ALPINE CONNECTOR PLATES ARE MADE OF 20/18/16GA (W,H/S/K) ASTM A653 GRADE 40/60 (W, K/H,S) GALV. STEEL. APPLY PLATES TO EACH FACE OF TRUSS AND, UNLESS OTHERWISE LOCATED ON THIS DESIGN, POSITION PER DRAWINGS 160A-Z. ANY INSPECTION OF PLATES FOLLOWED BY (1) SHALL BE PER ANNEX A3 OF TPI1-2002 SEC.3. A SEAL ON THIS DRAWING INDICATES ACCEPTANCE OF PROFESSIONAL ENGINEERING RESPONSIBILITY SOLELY FOR THE TRUSS COMPONENT DESIGN SHOWN. THE SUITABILITY AND USE OF THIS COMPONENT FOR ANY BUILDING IS THE RESPONSIBILITY OF THE BUILDING DESIGNER PER ANSI/TPI 1 SEC. 2.

ARTHUR R. FISHER LICENSE No. 59687 STATE OF FLORIDA PROFESSIONAL ENGINEER
Oct 17 '05

TC LL	20.0 PSF	REF	R487-- 3810
TC DL	10.0 PSF	DATE	10/17/05
BC DL	10.0 PSF	DRW	HCUSR487 05290009
BC LL	0.0 PSF	HC-ENG	JB/AF
TOT.LD.	40.0 PSF	SEQN-	45300
DUR.FAC.	1.25		
SPACING	24.0"	JREF-	1SRC487_Z01

(5-434-MIKE STALVEY AR1)

Top chord 2x4 SP #2 Dense :T3 2x6 SP #2:
:T5, T6 2x6 SP #1 Dense:
Bot chord 2x8 SP SS :B1 2x6 SP #2:
:B4 2x4 SP #2 Dense: :B5 2x6 SP #1 Dense:
Webs 2x4 SP #3 :W1 2x6 SP #2:
:W14 2x4 SP #2 Dense:

SPECIAL LOADS
------(LUMBER DUR.FAC.=1.25 / PLATE DUR.FAC.=1.25)

TC - From	61 PLF	at -1.50 to	61 PLF	at 8.00
TC - From	63 PLF	at 8.00 to	63 PLF	at 19.33
TC - From	86 PLF	at 19.33 to	86 PLF	at 19.78
TC - From	63 PLF	at 19.78 to	63 PLF	at 22.02
TC - From	61 PLF	at 22.02 to	61 PLF	at 30.65
TC - From	63 PLF	at 30.65 to	63 PLF	at 32.88
TC - From	86 PLF	at 32.88 to	86 PLF	at 33.33
TC - From	63 PLF	at 33.33 to	63 PLF	at 34.18
TC - From	218 PLF	at 34.18 to	308 PLF	at 44.67
PLT- From	20 PLF	at 20.51 to	20 PLF	at 32.16
BC - From	4 PLF	at -1.50 to	4 PLF	at 0.00
BC - From	20 PLF	at 0.00 to	20 PLF	at 19.33
BC - From	120 PLF	at 19.33 to	120 PLF	at 33.33
BC - From	20 PLF	at 33.33 to	20 PLF	at 44.67

BC - 156 LB Conc. Load at 19.33, 33.33

Calculated horizontal deflection is 0.14" due to live load and 0.23" due to dead load.

(A) (2) SP #3 or better scab braces. Same size & 80% length of web member. Attach one to each face w/10d Box or Gun (0.128"x3",min.)nails @ 6" OC.

110 mph wind, 13.22 ft mean hgt, ASCE 7-98, CLOSED bldg, Located anywhere in roof, CAT II, EXP B, wind TC DL=5.0 psf, wind BC DL=5.0 psf.

Right end vertical not exposed to wind pressure.

Collar-tie braced with continuous lateral bracing at 24" OC. or rigid ceiling.

Deflection meets L/360 live and L/240 total load.

RS1 (2) 2x6X4-0-0 SP #2 Top chord scab centered 20-4-14 from left end. Attach to one face of chord with (3) rows of 10d_Common_(0.148"x3",_min.)_nails @ 6" O.C., staggered 3".

RS2 (2) 2x6X14-0-0 SP #2 Top chord scab centered 37-3-7 from left end. Attach to one face of chord with (3) rows of 10d_Common_(0.148"x3",_min.)_nails @ 6" O.C., staggered 3".

RS3 (1) 2x8X15-11-13 SP SS Bottom chord scab centered 25-7-15 from left end. Attach to one face of chord with (4) rows of 10d_Common_(0.148"x3",_min.)_nails @ 6" O.C., staggered 3".

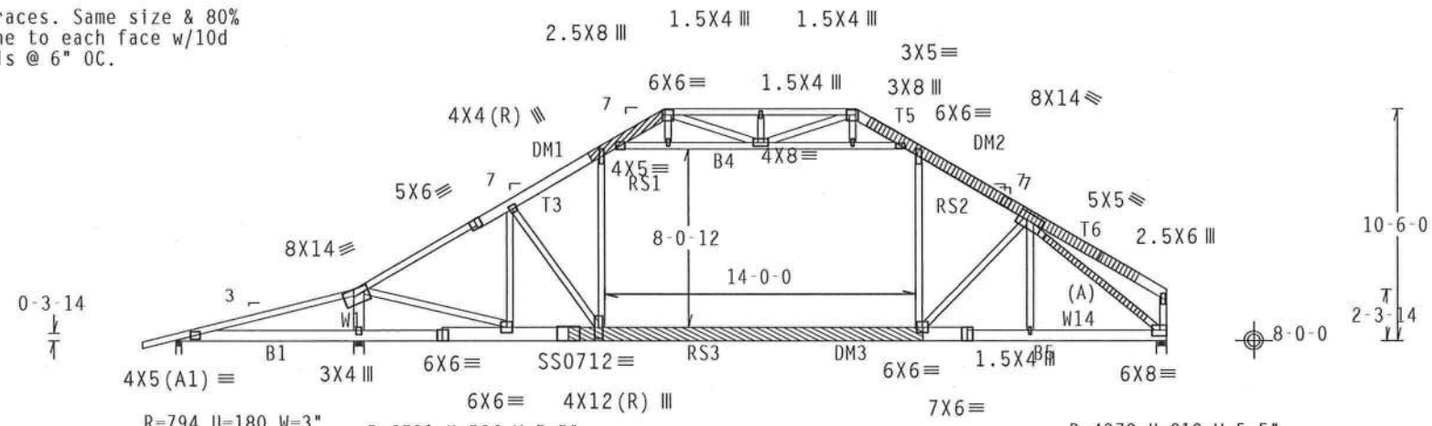

Design Crit: TPI-2002(STD)/FBC

PLT TYP. 18 Gauge HS,Wave Cq/RT=1.00(1.25)/10(0) 7.04.0 TY:3 FL/-/3/-/-/R/- Scale =.125"/Ft.

ALPINE
Alpine Engineered Products, Inc.
1950 Marley Drive
Haines City, FL 33844
FL Certificate of Authorization # 567

WARNING TRUSSES REQUIRE EXTREME CARE IN FABRICATION, HANDLING, SHIPPING, INSTALLING AND BRACING. REFER TO BCSI 1-03 (BUILDING COMPONENT SAFETY INFORMATION), PUBLISHED BY TPI (TRUSS PLATE INSTITUTE, 583 D'ONOFRIO DR., SUITE 200, MADISON, WI 53719) AND WTCA (WOOD TRUSS COUNCIL OF AMERICA, 6300 ENTERPRISE LN, MADISON, WI 53719) FOR SAFETY PRACTICES PRIOR TO PERFORMING THESE FUNCTIONS. UNLESS OTHERWISE INDICATED, TOP CHORD SHALL HAVE PROPERLY ATTACHED STRUCTURAL PANELS AND BOTTOM CHORD SHALL HAVE A PROPERLY ATTACHED RIGID CEILING.

IMPORTANT FURNISH A COPY OF THIS DESIGN TO THE INSTALLATION CONTRACTOR. ALPINE ENGINEERED PRODUCTS, INC. SHALL NOT BE RESPONSIBLE FOR ANY DEVIATION FROM THIS DESIGN; ANY FAILURE TO BUILD THE TRUSS IN CONFORMANCE WITH TPI; OR FABRICATING, HANDLING, SHIPPING, INSTALLING & BRACING OF TRUSSES. DESIGN CONFORMS WITH APPLICABLE PROVISIONS OF NDS (NATIONAL DESIGN SPEC, BY AF&PA) AND TPI. ALPINE CONNECTOR PLATES ARE MADE OF 20/18/16GA (W,H/S/K) ASTM A653 GRADE 40/60 (W, K/H,S) GALV. STEEL. APPLY PLATES TO EACH FACE OF TRUSS AND, UNLESS OTHERWISE LOCATED ON THIS DESIGN, POSITION PER DRAWINGS 160A-Z. ANY INSPECTION OF PLATES FOLLOWED BY (1) SHALL BE PER ANNEX A3 OF TPI1-2002 SEC.3. A SEAL ON THIS DRAWING INDICATES ACCEPTANCE OF PROFESSIONAL ENGINEERING RESPONSIBILITY SOLELY FOR THE TRUSS COMPONENT DESIGN SHOWN. THE SUITABILITY AND USE OF THIS COMPONENT FOR ANY BUILDING IS THE RESPONSIBILITY OF THE BUILDING DESIGNER PER ANSI/TPI 1 SEC. 2.

ARTHUR R. FISHER LICENSE No. 59687 STATE OF FLORIDA PROFESSIONAL ENGINEER

Oc 17 05

TC LL	20.0 PSF	REF	R487-- 3811
TC DL	10.0 PSF	DATE	10/17/05
BC DL	10.0 PSF	DRW	HCUSR487 05290010
BC LL	0.0 PSF	HC-ENG	JB/AF
TOT.LD.	40.0 PSF	SEQN-	45389
DUR.FAC.	1.25		
SPACING	24.0"	JREF-	1SRC487_Z01

(5-434-MIKE STALVEY - AGE)

Top chord 2x4 SP #2 Dense :T4, T6 2x6 SP #2:
Bot chord 2x8 SP SS :B1 2x6 SP #2:
:B4 2x4 SP #2 Dense: :B5 2x6 SP #1 Dense:
Webs 2x4 SP #3 :W1 2x6 SP #2:
:W2 2x4 SP #2 Dense:

THE BUILDING DESIGNER IS RESPONSIBLE FOR THE DESIGN OF THE ROOF AND CEILING DIAPHRAGMS, GABLE END SHEAR WALLS, AND SUPPORTING SHEAR WALLS. SHEAR WALLS MUST PROVIDE CONTINUOUS LATERAL RESTRAINT TO THE GABLE END. ALL CONNECTIONS TO BE DESIGNED BY THE BUILDING DESIGNER.

SPECIAL LOADS
------(LUMBER DUR.FAC.=1.25 / PLATE DUR.FAC.=1.25)

TC - From	83 PLF	at -1.50	to	83 PLF	at 8.00
TC - From	85 PLF	at 8.00	to	85 PLF	at 19.33
TC - From	108 PLF	at 19.33	to	108 PLF	at 19.78
TC - From	85 PLF	at 19.78	to	85 PLF	at 22.02
TC - From	83 PLF	at 22.02	to	83 PLF	at 30.65
TC - From	85 PLF	at 30.65	to	85 PLF	at 32.88
TC - From	108 PLF	at 32.88	to	108 PLF	at 33.33
TC - From	85 PLF	at 33.33	to	85 PLF	at 44.67
PLT- From	20 PLF	at 20.79	to	20 PLF	at 31.87
BC - From	4 PLF	at -1.50	to	4 PLF	at 0.00
BC - From	20 PLF	at 0.00	to	20 PLF	at 19.33
BC - From	120 PLF	at 19.33	to	120 PLF	at 33.33
BC - From	20 PLF	at 33.33	to	20 PLF	at 44.67
BC -	156 LB	Conc. Load	at	19.33, 33.33	

(**) 5 plate(s) require special positioning. Refer to scaled plate plot details for special positioning requirements.

110 mph wind, 13.05 ft mean hgt, ASCE 7-98, CLOSED bldg, Located anywhere in roof, CAT II, EXP B, wind TC DL=5.0 psf, wind BC DL=5.0 psf.

See DWGS A11015EC1103 & GBLLETIN0405 for more requirements.

Collar-tie braced with continuous lateral bracing at 24" OC. or rigid ceiling.

Deflection meets L/360 live and L/240 total load.

** WARNING! Overhang deflections excessive ** Truss has vertical deflection on overhang of 0.21" due to live load and 0.20" due to dead load at X = -1-6-0. Creep increase factor for dead load is 1.00.

+ MEMBER TO BE LATERALLY BRACED FOR WIND LOADS PERPENDICULAR TO TRUSS. BRACING SYSTEM TO BE DESIGNED AND FURNISHED BY OTHERS.

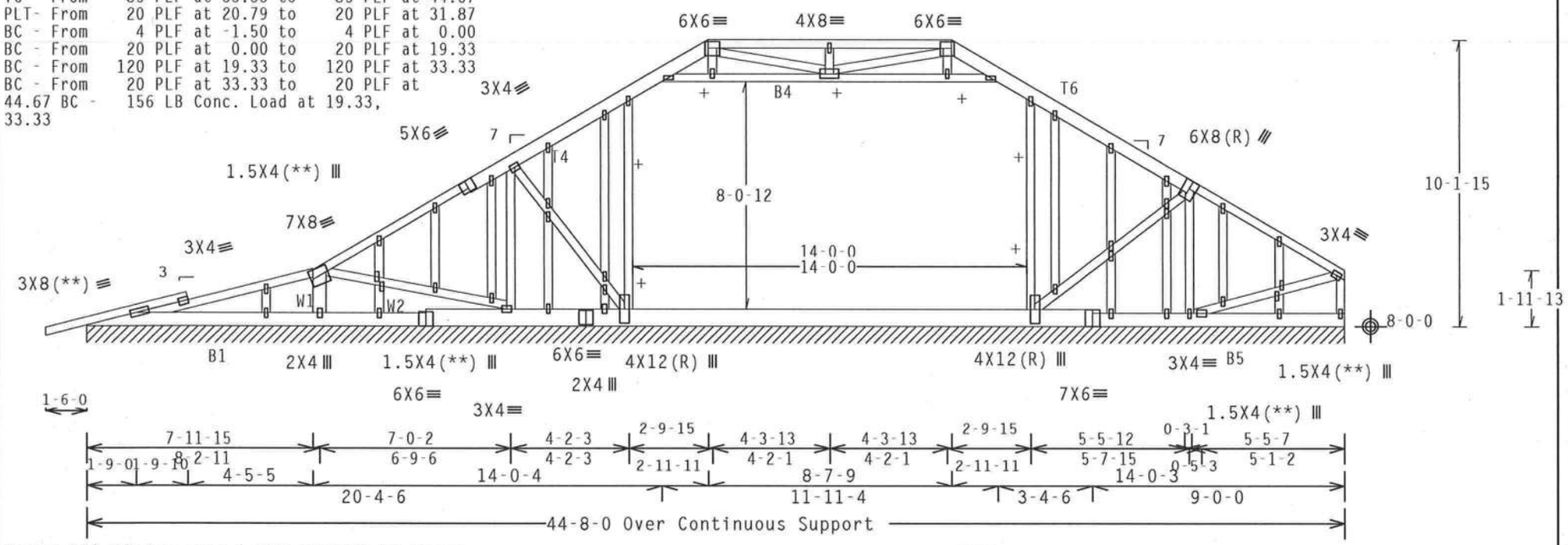

Note: All Plates Are 1.5X4 Except As Shown.

Design Crit: TPI-2002(STD)/FBC

PLT TYP. Wave Cq/RT=1.00(1.25)/10(0) 7.04.0 TY:1 FL/-/3/-/-/R/- Scale =.1875"/Ft.

ALPINE
Alpine Engineered Products, Inc.
1950 Marley Drive
Haines City, FL 33844
FL Certificate of Authorization # 567

WARNING TRUSSES REQUIRE EXTREME CARE IN FABRICATION, HANDLING, SHIPPING, INSTALLING AND BRACING. REFER TO BCSI 1-03 (BUILDING COMPONENT SAFETY INFORMATION), PUBLISHED BY TPI (TRUSS PLATE INSTITUTE, 583 D'ONOFRIO DR., SUITE 200, MADISON, WI 53719) AND WTCA (WOOD TRUSS COUNCIL OF AMERICA, 6300 ENTERPRISE LN, MADISON, WI 53719) FOR SAFETY PRACTICES PRIOR TO PERFORMING THESE FUNCTIONS. UNLESS OTHERWISE INDICATED, TOP CHORD SHALL HAVE PROPERLY ATTACHED STRUCTURAL PANELS AND BOTTOM CHORD SHALL HAVE A PROPERLY ATTACHED RIGID CEILING.

IMPORTANTFURNISH A COPY OF THIS DESIGN TO THE INSTALLATION CONTRACTOR. ALPINE ENGINEERED PRODUCTS, INC. SHALL NOT BE RESPONSIBLE FOR ANY DEVIATION FROM THIS DESIGN; ANY FAILURE TO BUILD THE TRUSS IN CONFORMANCE WITH TPI; OR FABRICATING, HANDLING, SHIPPING, INSTALLING & BRACING OF TRUSSES. DESIGN CONFORMS WITH APPLICABLE PROVISIONS OF NDS (NATIONAL DESIGN SPEC, BY AF&PA) AND TPI. ALPINE CONNECTOR PLATES ARE MADE OF 20/18/16GA (W,H/S/K) ASTM A653 GRADE 40/60 (W, K/H,S) GALV. STEEL. APPLY PLATES TO EACH FACE OF TRUSS AND, UNLESS OTHERWISE LOCATED ON THIS DESIGN, POSITION PER DRAWINGS 160A-Z. ANY INSPECTION OF PLATES FOLLOWED BY (1) SHALL BE PER ANNEX A3 OF TPI1-2002 SEC.3. A SEAL ON THIS DRAWING INDICATES ACCEPTANCE OF PROFESSIONAL ENGINEERING RESPONSIBILITY SOLELY FOR THE TRUSS COMPONENT DESIGN SHOWN. THE SUITABILITY AND USE OF THIS COMPONENT FOR ANY BUILDING IS THE RESPONSIBILITY OF THE BUILDING DESIGNER PER ANSI/TPI 1 SEC. 2.

ARTHUR R. FISHER LICENSE No.59687 STATE OF FLORIDA PROFESSIONAL ENGINEER
Oct 17 '05

TC LL	20.0 PSF	REF	R487-- 3812
TC DL	10.0 PSF	DATE	10/15/05
BC DL	10.0 PSF	DRW	HCUSR487 05288026
BC LL	0.0 PSF	HC-ENG	DF/AF
TOT.LD.	40.0 PSF	SEQN-	13529
DUR.FAC.	1.25		
SPACING	SEE ABOVE	JREF-	1SRC487_Z01

(5-434-MIKE STALVEY - AR)

Top chord 2x4 SP #2 Dense :T3, T5 2x6 SP #2:
Bot chord 2x8 SP SS :B1 2x6 SP #2:
:B4 2x4 SP #2 Dense: :B5 2x6 SP #1 Dense:
Webs 2x4 SP #3 :W1 2x6 SP #2:
:W2 2x4 SP #2 Dense:

Collar-tie braced with continuous lateral bracing at 24" OC. or rigid ceiling.

Deflection meets L/360 live and L/240 total load.

THIS TRUSS IS DESIGNED TO SUPPORT 24" OC LOADING ONLY, AND IS NOT DESIGNED TO SUPPORT ANY ADDITIONAL LOAD SUCH AS THE DORMER LOAD.

110 mph wind, 13.22 ft mean hgt, ASCE 7-98, CLOSED bldg, Located anywhere in roof, CAT II, EXP B, wind TC DL=5.0 psf, wind BC DL=5.0 psf.

Right end vertical not exposed to wind pressure.

BC attic room floor loading: LL = 40.00 psf; DL = 10.00 psf; from 19-4-0 to 33-4-0.

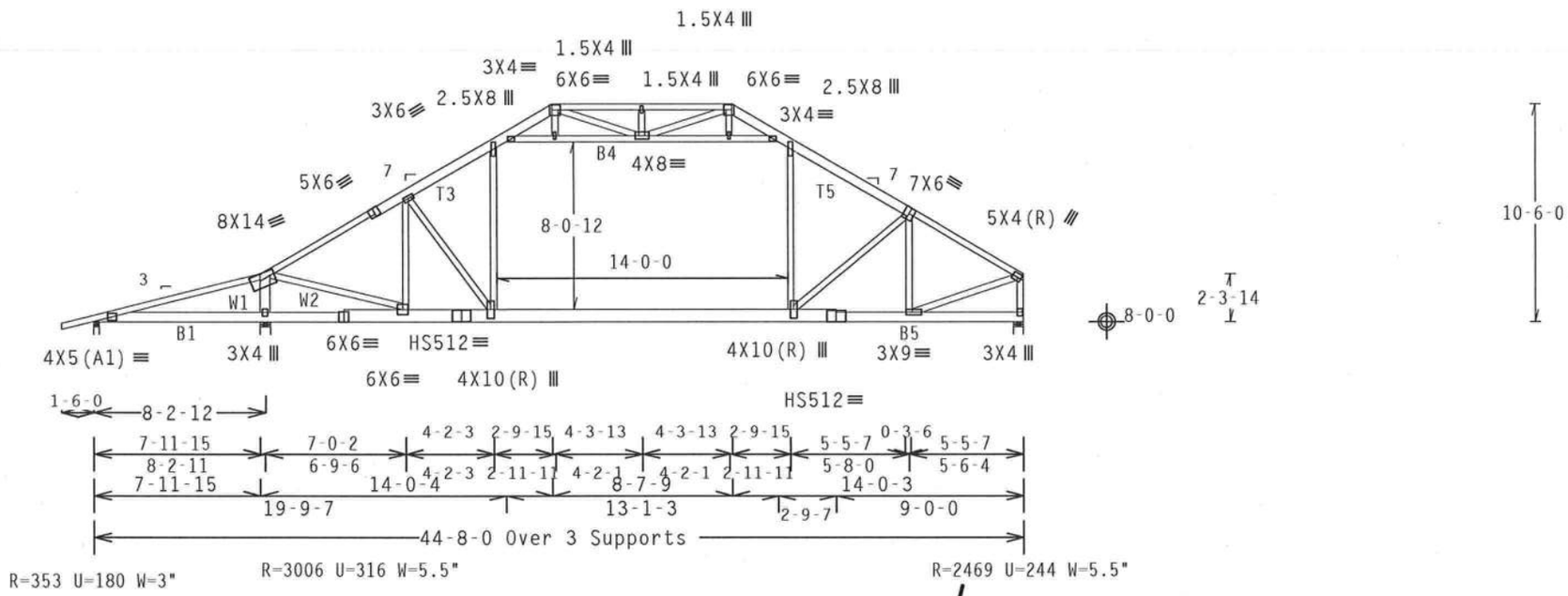

Design Crit: TPI-2002(STD)/FBC

PLT TYP. 20 Gauge HS,Wave Cq/RT=1.00(1.25)/10(0) 7.04.08 TY:7 FL/-/3/-/-/R/- Scale =.125"/Ft.

ALPINE
Alpine Engineered Products, Inc.
1950 Marley Drive
Haines City, FL 33844
FL Certificate of Authorization # 567

WARNING TRUSSES REQUIRE EXTREME CARE IN FABRICATION, HANDLING, SHIPPING, INSTALLING AND BRACING. REFER TO BCSI 1-03 (BUILDING COMPONENT SAFETY INFORMATION), PUBLISHED BY TPI (TRUSS PLATE INSTITUTE, 583 D'ONOFRIO DR., SUITE 200, MADISON, WI 53719) AND WTCA (WOOD TRUSS COUNCIL OF AMERICA, 6300 ENTERPRISE LN, MADISON, WI 53719) FOR SAFETY PRACTICES PRIOR TO PERFORMING THESE FUNCTIONS. UNLESS OTHERWISE INDICATED, TOP CHORD SHALL HAVE PROPERLY ATTACHED STRUCTURAL PANELS AND BOTTOM CHORD SHALL HAVE A PROPERLY ATTACHED RIGID CEILING.

IMPORTANT FURNISH A COPY OF THIS DESIGN TO THE INSTALLATION CONTRACTOR. ALPINE ENGINEERED PRODUCTS, INC. SHALL NOT BE RESPONSIBLE FOR ANY DEVIATION FROM THIS DESIGN; ANY FAILURE TO BUILD THE TRUSS IN CONFORMANCE WITH TPI; OR FABRICATING, HANDLING, SHIPPING, INSTALLING & BRACING OF TRUSSES. DESIGN CONFORMS WITH APPLICABLE PROVISIONS OF NDS (NATIONAL DESIGN SPEC. BY AF&PA) AND TPI. ALPINE CONNECTOR PLATES ARE MADE OF 20/18/16GA (W,H/S/K) ASTM A653 GRADE 40/60 (W, K/H,S) GALV. STEEL. APPLY PLATES TO EACH FACE OF TRUSS AND, UNLESS OTHERWISE LOCATED ON THIS DESIGN, POSITION PER DRAWINGS 160A-Z. ANY INSPECTION OF PLATES FOLLOWED BY (1) SHALL BE PER ANNEX A3 OF TPI1-2002 SEC.3. A SEAL ON THIS DRAWING INDICATES ACCEPTANCE OF PROFESSIONAL ENGINEERING RESPONSIBILITY SOLELY FOR THE TRUSS COMPONENT DESIGN SHOWN. THE SUITABILITY AND USE OF THIS COMPONENT FOR ANY BUILDING IS THE RESPONSIBILITY OF THE BUILDING DESIGNER PER ANSI/TPI 1 SEC. 2.

ARTHUR R. FISHER LICENSE No.59687 STATE OF FLORIDA PROFESSIONAL ENGINEER
Oct 17 '05

TC LL	20.0 PSF	REF	R487-- 3813
TC DL	10.0 PSF	DATE	10/15/05
BC DL	10.0 PSF	DRW	HCUSR487 05288027
BC LL	0.0 PSF	HC-ENG	DF/AF
TOT.LD.	40.0 PSF	SEQN-	13454
DUR.FAC.	1.25		
SPACING	24.0"	JREF-	1SRC487_Z01

(5-434-MIKE STALVEY - AV)

Top chord 2x4 SP #2 Dense
Bot chord 2x4 SP #2 Dense
Webs 2x4 SP #3 :W2 2x6 SP #2:
:W3, W7 2x4 SP #2 Dense:

110 mph wind, 13.47 ft mean hgt, ASCE 7-98, CLOSED bldg, not located within 6.50 ft from roof edge, CAT II, EXP B, wind TC DL=5.0 psf, wind BC DL=5.0 psf.

Deflection meets L/360 live and L/240 total load.

Shim all supports to solid bearing.

++ Negative reaction(s) of -371# MAX. (See below) from a non-wind load case requires uplift connection.

(**) 1 plate(s) require special positioning. Refer to scaled plate plot details for special positioning requirements.

Right end vertical not exposed to wind pressure.

Calculated horizontal deflection is 0.46" due to live load and 0.50" due to dead load.

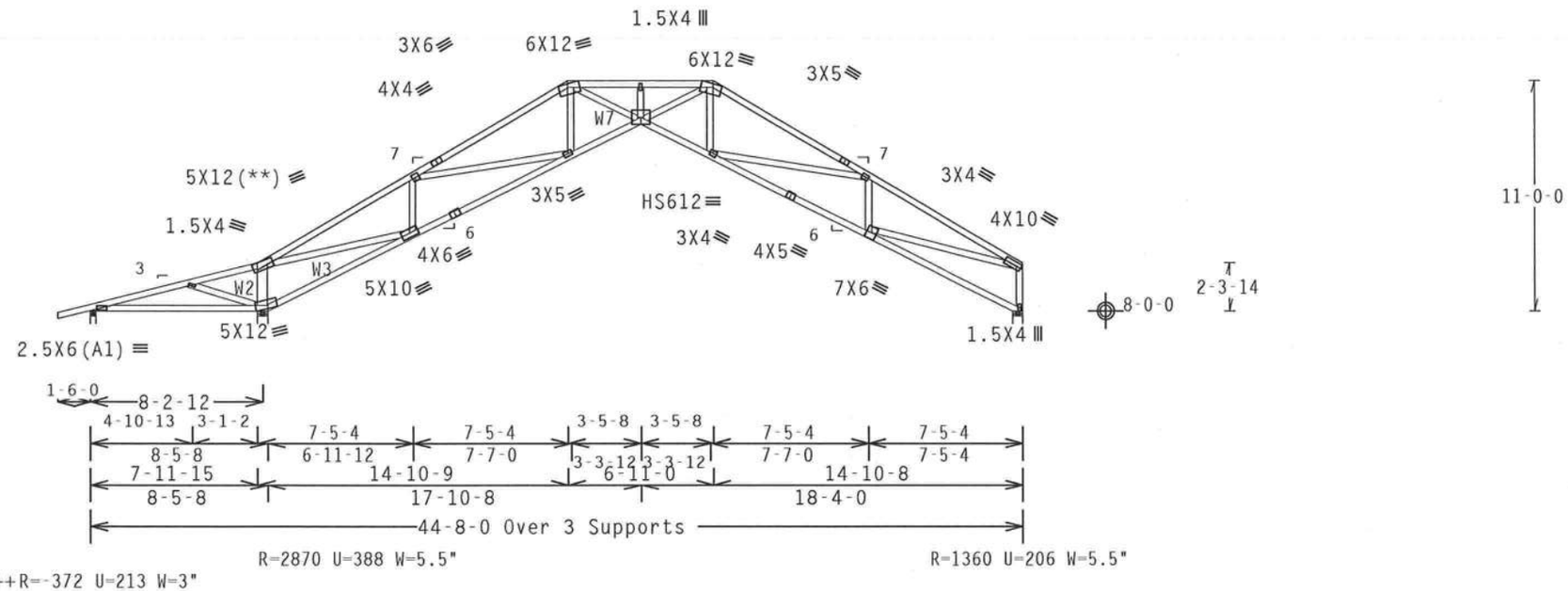

Design Crit: TPI-2002(STD)/FBC

PLT TYP. 20 Gauge HS,Wave Cq/RT=1.00(1.25)/10(0) 7.04.0[illegible] QTY:8 FL/-/3/-/-/R/- Scale =.125"/Ft.

ALPINE
Alpine Engineered Products, Inc.
1950 Marley Drive
Haines City, FL 33844
FL Certificate of Authorization # 567

WARNING TRUSSES REQUIRE EXTREME CARE IN FABRICATION, HANDLING, SHIPPING, INSTALLING AND BRACING. REFER TO BCSI 1-03 (BUILDING COMPONENT SAFETY INFORMATION), PUBLISHED BY TPI (TRUSS PLATE INSTITUTE, 583 D'ONOFRIO DR., SUITE 200, MADISON, WI 53719) AND WTCA (WOOD TRUSS COUNCIL OF AMERICA, 6300 ENTERPRISE LN, MADISON, WI 53719) FOR SAFETY PRACTICES PRIOR TO PERFORMING THESE FUNCTIONS. UNLESS OTHERWISE INDICATED, TOP CHORD SHALL HAVE PROPERLY ATTACHED STRUCTURAL PANELS AND BOTTOM CHORD SHALL HAVE A PROPERLY ATTACHED RIGID CEILING.

IMPORTANTFURNISH A COPY OF THIS DESIGN TO THE INSTALLATION CONTRACTOR. ALPINE ENGINEERED PRODUCTS, INC. SHALL NOT BE RESPONSIBLE FOR ANY DEVIATION FROM THIS DESIGN; ANY FAILURE TO BUILD THE TRUSS IN CONFORMANCE WITH TPI; OR FABRICATING, HANDLING, SHIPPING, INSTALLING & BRACING OF TRUSSES. DESIGN CONFORMS WITH APPLICABLE PROVISIONS OF NDS (NATIONAL DESIGN SPEC. BY AF&PA) AND TPI. ALPINE CONNECTOR PLATES ARE MADE OF 20/18/16GA (W,H/S/K) ASTM A653 GRADE 40/60 (W, K/H,S) GALV. STEEL. APPLY PLATES TO EACH FACE OF TRUSS AND, UNLESS OTHERWISE LOCATED ON THIS DESIGN, POSITION PER DRAWINGS 160A-2. ANY INSPECTION OF PLATES FOLLOWED BY (1) SHALL BE PER ANNEX A3 OF TPI1-2002 SEC.3. A SEAL ON THIS DRAWING INDICATES ACCEPTANCE OF PROFESSIONAL ENGINEERING RESPONSIBILITY SOLELY FOR THE TRUSS COMPONENT DESIGN SHOWN. THE SUITABILITY AND USE OF THIS COMPONENT FOR ANY BUILDING IS THE RESPONSIBILITY OF THE BUILDING DESIGNER PER ANSI/TPI 1 SEC. 2.

ARTHUR R. FISHER LICENSE No.59687 STATE OF FLORIDA PROFESSIONAL ENGINEER
Oc[illegible] '05

TC LL	20.0 PSF	REF	R487-- 3814
TC DL	10.0 PSF	DATE	10/15/05
BC DL	10.0 PSF	DRW	HCUSR487 05288028
BC LL	0.0 PSF	HC-ENG	DF/AF
TOT.LD.	40.0 PSF	SEQN-	44029
DUR.FAC.	1.25		
SPACING	24.0"	JREF-	1SRC487_Z01

(5-434-MIKE STALVEY - AVS)

Top chord 2x4 SP #2 Dense
Bot chord 2x4 SP #2 Dense
Webs 2x4 SP #3 :W1 2x6 SP #2:

Deflection meets L/360 live and L/240 total load.

Shim all supports to solid bearing.

110 mph wind, 13.47 ft mean hgt, ASCE 7-98, CLOSED bldg, not located within 4.50 ft from roof edge, CAT II, EXP B, wind TC DL=5.0 psf, wind BC DL=5.0 psf.

Right end vertical not exposed to wind pressure.

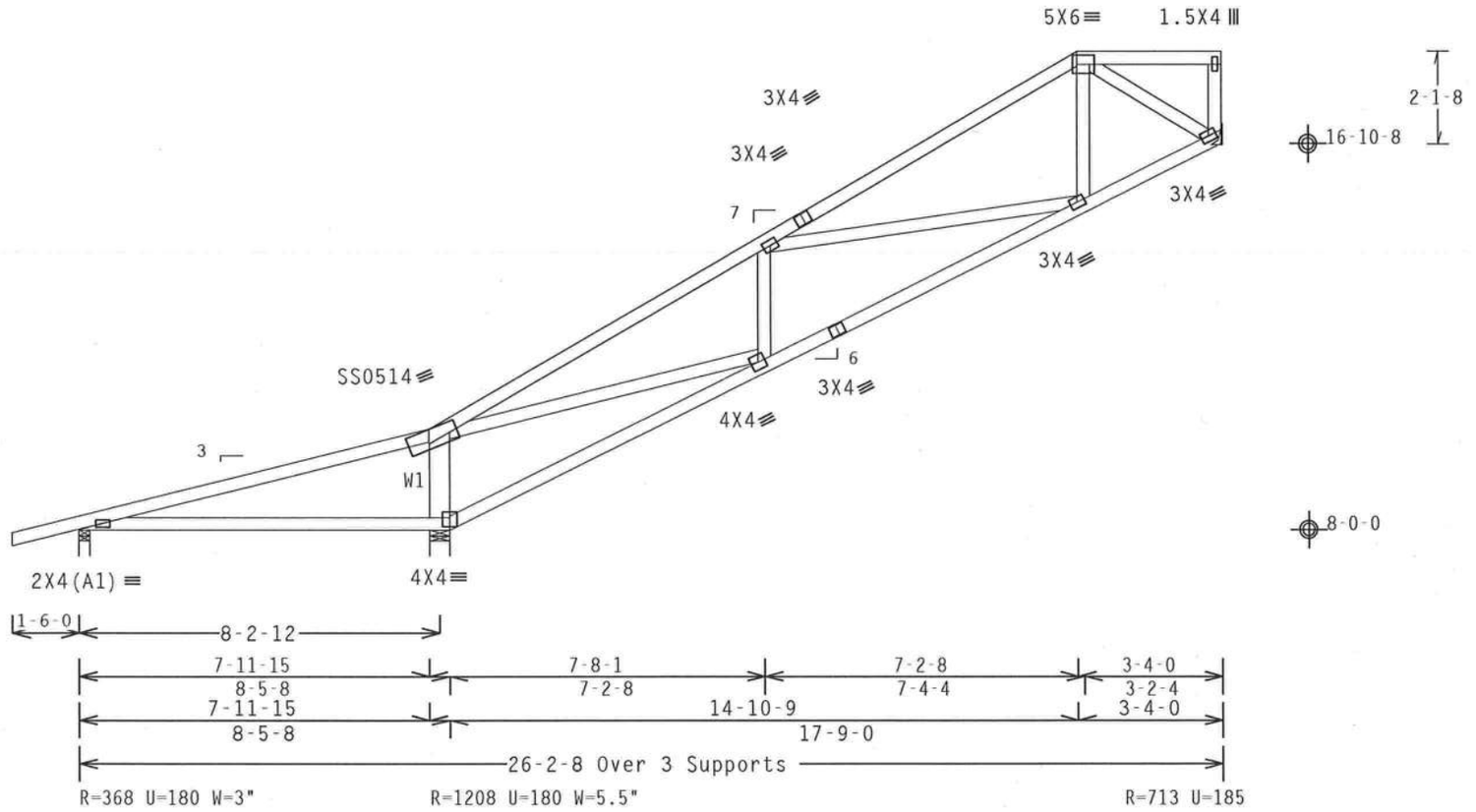

Design Crit: TPI-2002(STD)/FBC

PLT TYP. 18 Gauge HS,Wave Cq/RT=1.00(1.25)/10(0) 7.04.0[illegible] QTY:4 FL/-/3/-/-/R/- Scale =.25"/Ft.

ALPINE
Alpine Engineered Products, Inc.
1950 Marley Drive
Haines City, FL 33844
FL Certificate of Authorization # 567

WARNING TRUSSES REQUIRE EXTREME CARE IN FABRICATION, HANDLING, SHIPPING, INSTALLING AND BRACING. REFER TO BCSI 1-03 (BUILDING COMPONENT SAFETY INFORMATION), PUBLISHED BY TPI (TRUSS PLATE INSTITUTE, 583 D'ONOFRIO DR., SUITE 200, MADISON, WI 53719) AND WTCA (WOOD TRUSS COUNCIL OF AMERICA, 6300 ENTERPRISE LN, MADISON, WI 53719) FOR SAFETY PRACTICES PRIOR TO PERFORMING THESE FUNCTIONS. UNLESS OTHERWISE INDICATED, TOP CHORD SHALL HAVE PROPERLY ATTACHED STRUCTURAL PANELS AND BOTTOM CHORD SHALL HAVE A PROPERLY ATTACHED RIGID CEILING.

IMPORTANT FURNISH A COPY OF THIS DESIGN TO THE INSTALLATION CONTRACTOR. ALPINE ENGINEERED PRODUCTS, INC. SHALL NOT BE RESPONSIBLE FOR ANY DEVIATION FROM THIS DESIGN; ANY FAILURE TO BUILD THE TRUSS IN CONFORMANCE WITH TPI; OR FABRICATING, HANDLING, SHIPPING, INSTALLING & BRACING OF TRUSSES. DESIGN CONFORMS WITH APPLICABLE PROVISIONS OF NDS (NATIONAL DESIGN SPEC. BY AF&PA) AND TPI. ALPINE CONNECTOR PLATES ARE MADE OF 20/18/16GA (W,H/S/K) ASTM A653 GRADE 40/60 (W, K/H,S) GALV. STEEL. APPLY PLATES TO EACH FACE OF TRUSS AND, UNLESS OTHERWISE LOCATED ON THIS DESIGN, POSITION PER DRAWINGS 160A-Z. ANY INSPECTION OF PLATES FOLLOWED BY (1) SHALL BE PER ANNEX A3 OF TPI1-2002 SEC.3. A SEAL ON THIS DRAWING INDICATES ACCEPTANCE OF PROFESSIONAL ENGINEERING RESPONSIBILITY SOLELY FOR THE TRUSS COMPONENT DESIGN SHOWN. THE SUITABILITY AND USE OF THIS COMPONENT FOR ANY BUILDING IS THE RESPONSIBILITY OF THE BUILDING DESIGNER PER ANSI/TPI 1 SEC. 2.

ARTHUR R. FISHER
LICENSE
No.59687
STATE OF FLORIDA
PROFESSIONAL ENGINEER
Oct 17 '05

TC LL	20.0 PSF	REF	R487-- 3815
TC DL	10.0 PSF	DATE	10/15/05
BC DL	10.0 PSF	DRW	HCUSR487 05288003
BC LL	0.0 PSF	HC-ENG	DF/AF
TOT.LD.	40.0 PSF	SEQN-	13360
DUR.FAC.	1.25		
SPACING	24.0"	JREF-	1SRC487_Z01

(5-434-MIKE STALVEY - AV-1)

Top chord 2x6 SP #2 :T1 2x4 SP #2 Dense:
Bot chord 2x6 SP #2 :B3, B4 2x6 SP #1 Dense:
Webs 2x4 SP #3 :W5, W12, W14 2x6 SP #2:
:W6, W20 2x4 SP #2 Dense:

SPECIAL LOADS
------(LUMBER DUR.FAC.=1.25 / PLATE DUR.FAC.=1.25)

TC - From	64 PLF	at -1.50	to	64 PLF	at 16.63
TC - From	142 PLF	at 16.63	to	142 PLF	at 22.87
TC - From	136 PLF	at 22.87	to	136 PLF	at 29.79
TC - From	142 PLF	at 29.79	to	142 PLF	at 34.38
TC - From	382 PLF	at 34.38	to	469 PLF	at 44.67
BC - From	9 PLF	at -1.50	to	9 PLF	at 0.00
BC - From	45 PLF	at 0.00	to	45 PLF	at 8.46
BC - From	50 PLF	at 8.46	to	50 PLF	at 15.73
BC - From	50 PLF	at 15.73	to	50 PLF	at 26.33
BC - From	50 PLF	at 26.33	to	50 PLF	at 33.61
BC - From	50 PLF	at 33.61	to	50 PLF	at 44.67
BC -	1798 LB Conc. Load at 26.27				

Trusses to be spaced at 54.0" OC maximum.

THE BUILDING DESIGNER SHALL EVALUATE AND APPROVE LOAD MAGNITUDES AND LOCATIONS AS SHOWN ("SPECIAL LOADS").TRUSS ENGINEER & FABRICATOR ARE NOT RESPONSIBLE FOR LOAD MAGNITUDES AND LOCATIONS.

In lieu of structural panels or rigid ceiling use purlins to brace TC @ 24" OC, BC @ 24" OC.

Shim all supports to solid bearing.

3 COMPLETE TRUSSES REQUIRED

Nailing Schedule: (10d_Common_(0.148"x3",_min.)_nails)
Top Chord: 1 Row @ 6.25" o.c.
Bot Chord: 1 Row @12.00" o.c.
Webs : 1 Row @ 4" o.c.
Repeat nailing as each layer is applied. Use equal spacing between rows and stagger nails in each row to avoid splitting.

110 mph wind, 13.47 ft mean hgt, ASCE 7-98, CLOSED bldg, not located within 5.00 ft from roof edge, CAT II, EXP B, wind TC DL=5.0 psf, wind BC DL=5.0 psf.

Right end vertical not exposed to wind pressure.

Calculated horizontal deflection is 0.42" due to live load and 0.48" due to dead load.

Deflection meets L/360 live and L/240 total load.

** Negative reaction(s) of -2235# MAX. (See below) from a non-wind load case requires uplift connection. THE BUILDING DESIGNER MUST APPROVE OF THIS REACTION AND THE RELEVANT BEARING CONDITION.

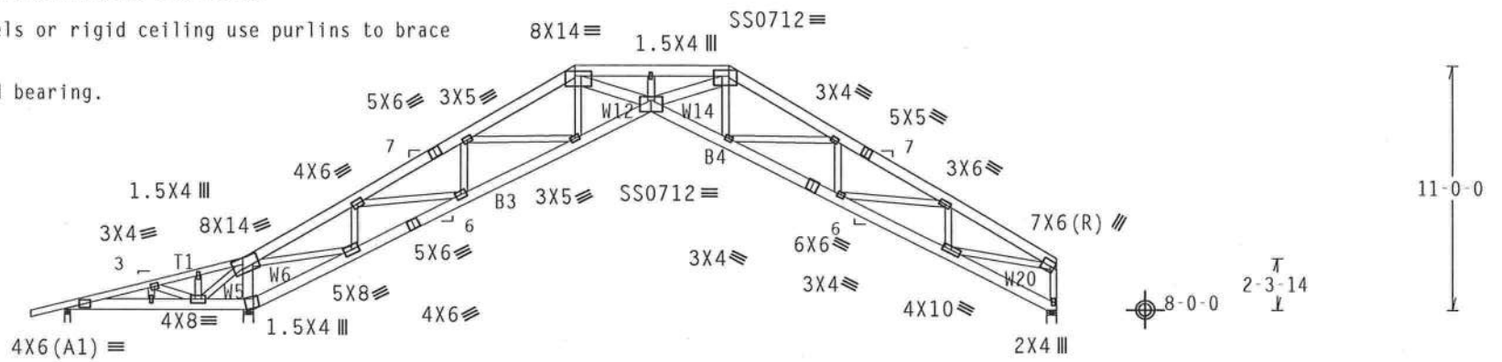

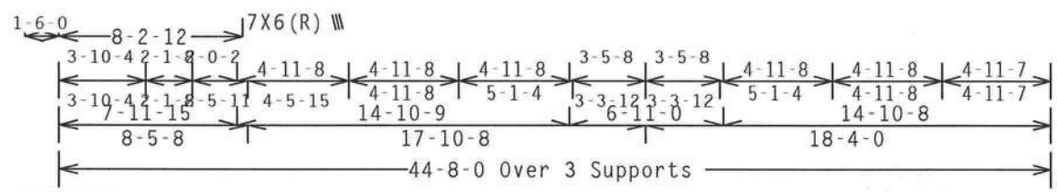

** R=-2235 U=473 W=3" R=8096 U=1498 W=5.5" R=6174 U=1142 W=5.5"

Design Crit: TPI-2002(STD)/FBC

PLT TYP. 18 Gauge HS,Wave Cq/RT=1.00(1.25)/10(0) 7.04.08 [illegible] Y:2 FL/-/3/-/-/R/- Scale =.125"/Ft.

ALPINE
Alpine Engineered Products, Inc.
1950 Marley Drive
Haines City, FL 33844
FL Certificate of Authorization # 567

WARNING TRUSSES REQUIRE EXTREME CARE IN FABRICATION, HANDLING, SHIPPING, INSTALLING AND BRACING. REFER TO BCSI 1-03 (BUILDING COMPONENT SAFETY INFORMATION), PUBLISHED BY TPI (TRUSS PLATE INSTITUTE, 583 D'ONOFRIO DR., SUITE 200, MADISON, WI 53719) AND WTCA (WOOD TRUSS COUNCIL OF AMERICA, 6300 ENTERPRISE LN, MADISON, WI 53719) FOR SAFETY PRACTICES PRIOR TO PERFORMING THESE FUNCTIONS. UNLESS OTHERWISE INDICATED, TOP CHORD SHALL HAVE PROPERLY ATTACHED STRUCTURAL PANELS AND BOTTOM CHORD SHALL HAVE A PROPERLY ATTACHED RIGID CEILING.

IMPORTANT FURNISH A COPY OF THIS DESIGN TO THE INSTALLATION CONTRACTOR. ALPINE ENGINEERED PRODUCTS, INC. SHALL NOT BE RESPONSIBLE FOR ANY DEVIATION FROM THIS DESIGN; ANY FAILURE TO BUILD THE TRUSS IN CONFORMANCE WITH TPI; OR FABRICATING, HANDLING, SHIPPING, INSTALLING & BRACING OF TRUSSES. DESIGN CONFORMS WITH APPLICABLE PROVISIONS OF NDS (NATIONAL DESIGN SPEC, BY AF&PA) AND TPI. ALPINE CONNECTOR PLATES ARE MADE OF 20/18/16GA (W,H/S/K) ASTM A653 GRADE 40/60 (W, K/H,S) GALV. STEEL. APPLY PLATES TO EACH FACE OF TRUSS AND, UNLESS OTHERWISE LOCATED ON THIS DESIGN, POSITION PER DRAWINGS 160A-Z. ANY INSPECTION OF PLATES FOLLOWED BY (1) SHALL BE PER ANNEX A3 OF TPI1-2002 SEC.3. A SEAL ON THIS DRAWING INDICATES ACCEPTANCE OF PROFESSIONAL ENGINEERING RESPONSIBILITY SOLELY FOR THE TRUSS COMPONENT DESIGN SHOWN. THE SUITABILITY AND USE OF THIS COMPONENT FOR ANY BUILDING IS THE RESPONSIBILITY OF THE BUILDING DESIGNER PER ANSI/TPI 1 SEC. 2.

ARTHUR R. FISHER
LICENSE
No. 59687
STATE OF FLORIDA
PROFESSIONAL ENGINEER

Oct 17 '05

TC LL	20.0 PSF	REF	R487-- 3816
TC DL	10.0 PSF	DATE	10/15/05
BC DL	10.0 PSF	DRW	HCUSR487 05288015
BC LL	0.0 PSF	HC-ENG	DF/AF
TOT.LD.	40.0 PSF	SEQN-	13576
DUR.FAC.	1.25		
SPACING	SEE ABOVE	JREF-	1SRC487_Z01

(5-434-MIKE STALVEY - BS)

Top chord 2x4 SP #2 Dense
Bot chord 2x4 SP #2 Dense
Webs 2x4 SP #3

Deflection meets L/360 live and L/240 total load.

110 mph wind, 12.30 ft mean hgt, ASCE 7-98, CLOSED bldg, Located anywhere in roof, CAT II, EXP B, wind TC DL=5.0 psf, wind BC DL=5.0 psf.

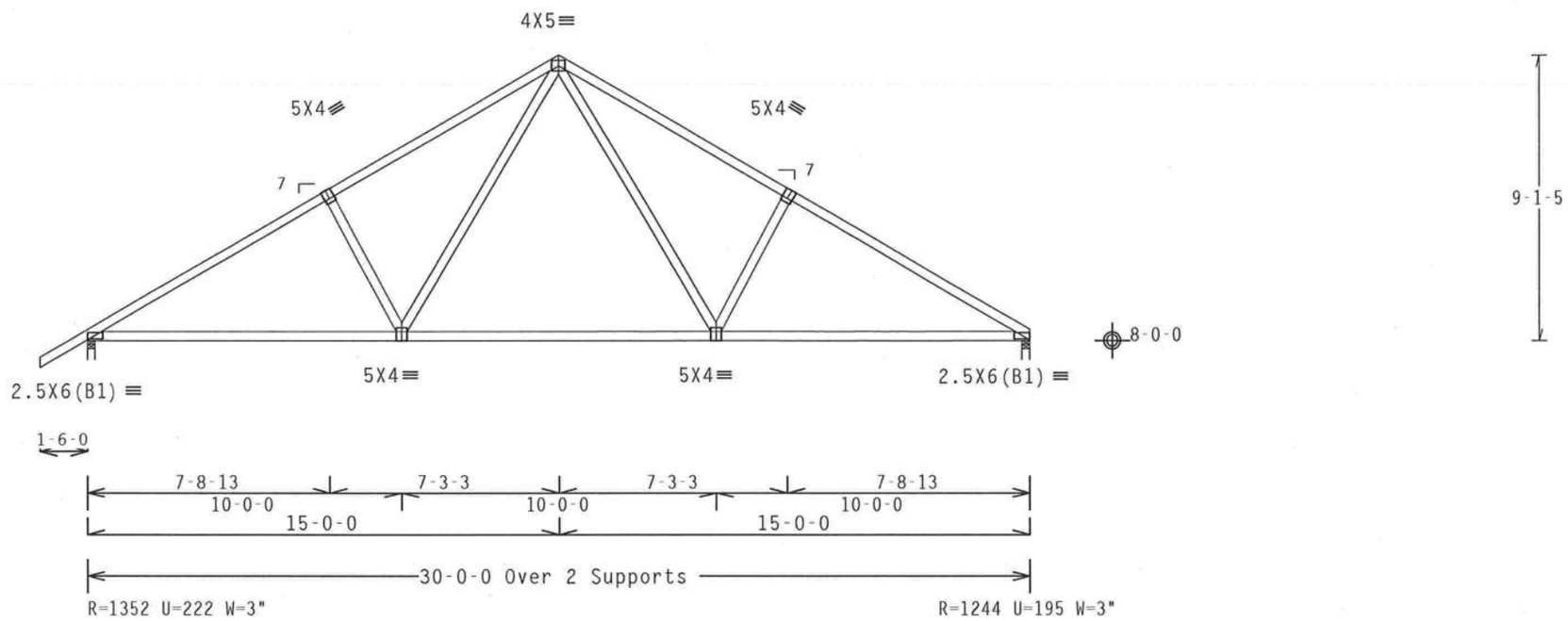

Design Crit: TPI-2002(STD)/FBC
PLT TYP. Wave Cq/RT=1.00(1.25)/10(0) 7.04.08 QTY:6 FL/-/3/-/-/R/- Scale =.1875"/Ft.

ALPINE
Alpine Engineered Products, Inc.
1950 Marley Drive
Haines City, FL 33844
FL Certificate of Authorization # 567

WARNING TRUSSES REQUIRE EXTREME CARE IN FABRICATION, HANDLING, SHIPPING, INSTALLING AND BRACING. REFER TO BCSI 1-03 (BUILDING COMPONENT SAFETY INFORMATION), PUBLISHED BY TPI (TRUSS PLATE INSTITUTE, 583 D'ONOFRIO DR., SUITE 200, MADISON, WI 53719) AND WTCA (WOOD TRUSS COUNCIL OF AMERICA, 6300 ENTERPRISE LN, MADISON, WI 53719) FOR SAFETY PRACTICES PRIOR TO PERFORMING THESE FUNCTIONS. UNLESS OTHERWISE INDICATED, TOP CHORD SHALL HAVE PROPERLY ATTACHED STRUCTURAL PANELS AND BOTTOM CHORD SHALL HAVE A PROPERLY ATTACHED RIGID CEILING.

IMPORTANT FURNISH A COPY OF THIS DESIGN TO THE INSTALLATION CONTRACTOR. ALPINE ENGINEERED PRODUCTS, INC. SHALL NOT BE RESPONSIBLE FOR ANY DEVIATION FROM THIS DESIGN; ANY FAILURE TO BUILD THE TRUSS IN CONFORMANCE WITH TPI; OR FABRICATING, HANDLING, SHIPPING, INSTALLING & BRACING OF TRUSSES. DESIGN CONFORMS WITH APPLICABLE PROVISIONS OF NDS (NATIONAL DESIGN SPEC. BY AF&PA) AND TPI. ALPINE CONNECTOR PLATES ARE MADE OF 20/18/16GA (W,H/S/K) ASTM A653 GRADE 40/60 (W, K/H,S) GALV. STEEL. APPLY PLATES TO EACH FACE OF TRUSS AND, UNLESS OTHERWISE LOCATED ON THIS DESIGN, POSITION PER DRAWINGS 160A-Z. ANY INSPECTION OF PLATES FOLLOWED BY (1) SHALL BE PER ANNEX A3 OF TPI1-2002 SEC.3. A SEAL ON THIS DRAWING INDICATES ACCEPTANCE OF PROFESSIONAL ENGINEERING RESPONSIBILITY SOLELY FOR THE TRUSS COMPONENT DESIGN SHOWN. THE SUITABILITY AND USE OF THIS COMPONENT FOR ANY BUILDING IS THE RESPONSIBILITY OF THE BUILDING DESIGNER PER ANSI/TPI 1 SEC. 2.

ARTHUR R. FISHER LICENSE No. 59687 STATE OF FLORIDA PROFESSIONAL ENGINEER
Oct 17 '05

TC LL	20.0 PSF	REF	R487-- 3817
TC DL	10.0 PSF	DATE	10/15/05
BC DL	10.0 PSF	DRW	HCUSR487 05288021
BC LL	0.0 PSF	HC-ENG	DF/AF *
TOT.LD.	40.0 PSF	SEQN-	13202
DUR.FAC.	1.25		
SPACING	24.0"	JREF-	1SRC487_Z01

(5-434-MIKE STALVEY - BGE)

Top chord 2x4 SP #2 Dense
Bot chord 2x4 SP #2 Dense
Webs 2x4 SP #3

SPECIAL LOADS
------(LUMBER DUR.FAC.=1.25 / PLATE DUR.FAC.=1.25)

TC - From	85 PLF	at -1.50	to	85 PLF	at 31.50
BC - From	5 PLF	at -1.50	to	5 PLF	at 0.00
BC - From	20 PLF	at 0.00	to	20 PLF	at 30.00
BC - From	5 PLF	at 30.00	to	5 PLF	at 30.63
BC - From	5 PLF	at 30.63	to	5 PLF	at 31.50

THE BUILDING DESIGNER IS RESPONSIBLE FOR THE DESIGN OF THE ROOF AND CEILING DIAPHRAGMS, GABLE END SHEAR WALLS, AND SUPPORTING SHEAR WALLS. SHEAR WALLS MUST PROVIDE CONTINUOUS LATERAL RESTRAINT TO THE GABLE END. ALL CONNECTIONS TO BE DESIGNED BY THE BUILDING DESIGNER.

(**) 2 plate(s) require special positioning. Refer to scaled plate plot details for special positioning requirements.

110 mph wind, 12.13 ft mean hgt, ASCE 7-98, CLOSED bldg, Located anywhere in roof, CAT II, EXP B, wind TC DL=5.0 psf, wind BC DL=5.0 psf.

See DWGS A11015EC1103 & GBLLETIN0405 for more requirements.

Deflection meets L/360 live and L/240 total load.

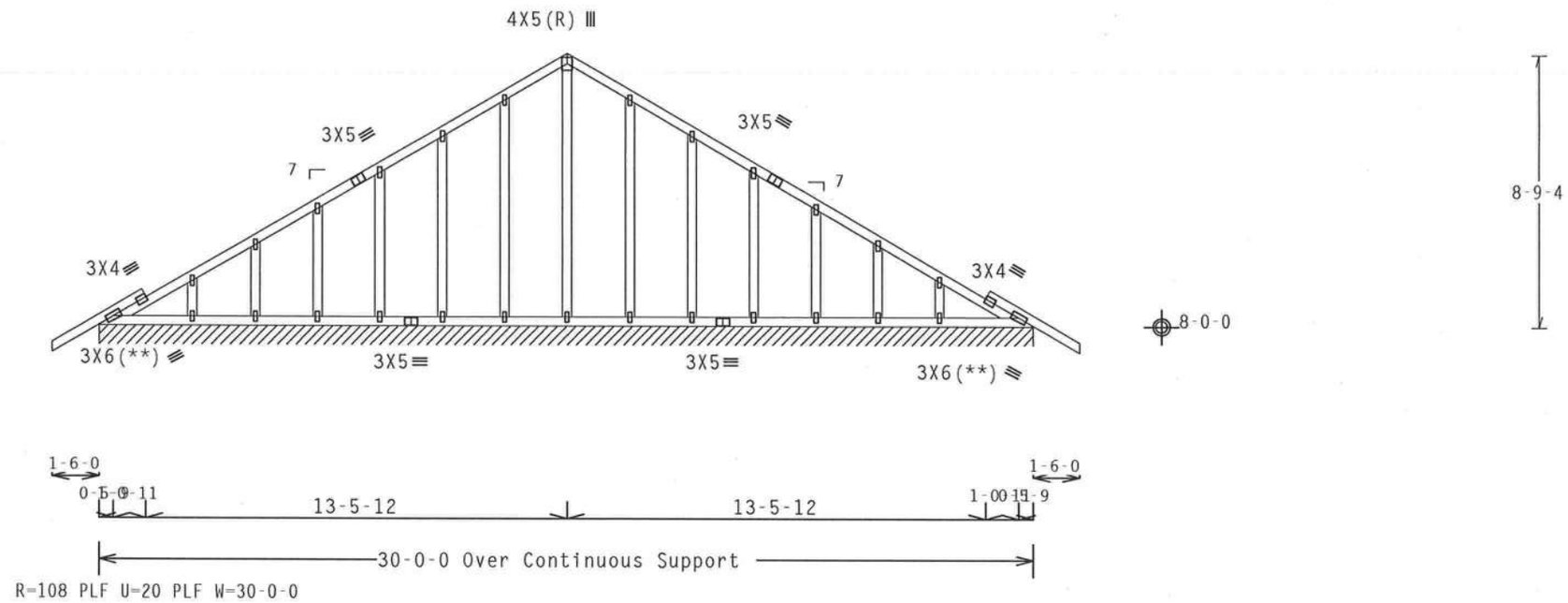

Note: All Plates Are 1.5X4 Except As Shown.

Design Crit: TPI-2002(STD)/FBC

PLT TYP. Wave — Cq/RT=1.00(1.25)/10(0) 7.04.00 — QTY:1 — FL/-/3/-/-/R/- — Scale =.1875"/Ft.

ALPINE
Alpine Engineered Products, Inc.
1950 Marley Drive
Haines City, FL 33844
FL Certificate of Authorization # 567

WARNING TRUSSES REQUIRE EXTREME CARE IN FABRICATION, HANDLING, SHIPPING, INSTALLING AND BRACING. REFER TO BCSI 1-03 (BUILDING COMPONENT SAFETY INFORMATION), PUBLISHED BY TPI (TRUSS PLATE INSTITUTE, 583 D'ONOFRIO DR., SUITE 200, MADISON, WI 53719) AND WTCA (WOOD TRUSS COUNCIL OF AMERICA, 6300 ENTERPRISE LN, MADISON, WI 53719) FOR SAFETY PRACTICES PRIOR TO PERFORMING THESE FUNCTIONS. UNLESS OTHERWISE INDICATED, TOP CHORD SHALL HAVE PROPERLY ATTACHED STRUCTURAL PANELS AND BOTTOM CHORD SHALL HAVE A PROPERLY ATTACHED RIGID CEILING.

IMPORTANTFURNISH A COPY OF THIS DESIGN TO THE INSTALLATION CONTRACTOR. ALPINE ENGINEERED PRODUCTS, INC. SHALL NOT BE RESPONSIBLE FOR ANY DEVIATION FROM THIS DESIGN; ANY FAILURE TO BUILD THE TRUSS IN CONFORMANCE WITH TPI; OR FABRICATING, HANDLING, SHIPPING, INSTALLING & BRACING OF TRUSSES. DESIGN CONFORMS WITH APPLICABLE PROVISIONS OF NDS (NATIONAL DESIGN SPEC. BY AF&PA) AND TPI. ALPINE CONNECTOR PLATES ARE MADE OF 20/18/16GA (W.H/S/K) ASTM A653 GRADE 40/60 (W. K/H.S) GALV. STEEL. APPLY PLATES TO EACH FACE OF TRUSS AND, UNLESS OTHERWISE LOCATED ON THIS DESIGN, POSITION PER DRAWINGS 160A-2. ANY INSPECTION OF PLATES FOLLOWED BY (1) SHALL BE PER ANNEX A3 OF TPI1-2002 SEC.3. A SEAL ON THIS DRAWING INDICATES ACCEPTANCE OF PROFESSIONAL ENGINEERING RESPONSIBILITY SOLELY FOR THE TRUSS COMPONENT DESIGN SHOWN. THE SUITABILITY AND USE OF THIS COMPONENT FOR ANY BUILDING IS THE RESPONSIBILITY OF THE BUILDING DESIGNER PER ANSI/TPI 1 SEC. 2.

ARTHUR R. FISHER LICENSE No. 59687 STATE OF FLORIDA PROFESSIONAL ENGINEER
Oct 17 '05

TC LL	20.0 PSF	REF	R487-- 3818
TC DL	10.0 PSF	DATE	10/15/05
BC DL	10.0 PSF	DRW	HCUSR487 05288001
BC LL	0.0 PSF	HC-ENG	DF/AF
TOT.LD.	40.0 PSF	SEQN-	13220
DUR.FAC.	1.25		
SPACING	SEE ABOVE	JREF-	1SRC487_Z01

(5-434-MIKE STALVEY BGES)

Top chord 2x4 SP #2 Dense
Bot chord 2x4 SP #2 Dense
Webs 2x4 SP #3

SPECIAL LOADS
------(LUMBER DUR.FAC.=1.25 / PLATE DUR.FAC.=1.25)

TC - From	85 PLF at	0.00 to	85 PLF at	31.50
BC - From	20 PLF at	0.00 to	20 PLF at	30.00
BC - From	5 PLF at	30.00 to	5 PLF at	30.32
BC - From	5 PLF at	30.32 to	5 PLF at	31.50

THE BUILDING DESIGNER IS RESPONSIBLE FOR THE DESIGN OF THE ROOF AND CEILING DIAPHRAGMS, GABLE END SHEAR WALLS, AND SUPPORTING SHEAR WALLS. SHEAR WALLS MUST PROVIDE CONTINUOUS LATERAL RESTRAINT TO THE GABLE END. ALL CONNECTIONS TO BE DESIGNED BY THE BUILDING DESIGNER.

(**) 1 plate(s) require special positioning. Refer to scaled plate plot details for special positioning requirements.

110 mph wind, 12.13 ft mean hgt, ASCE 7-98, CLOSED bldg, Located anywhere in roof, CAT II, EXP B, wind TC DL=5.0 psf, wind BC DL=5.0 psf.

See DWGS A11015EC1103 & GBLLETIN0405 for more requirements.

Deflection meets L/360 live and L/240 total load.

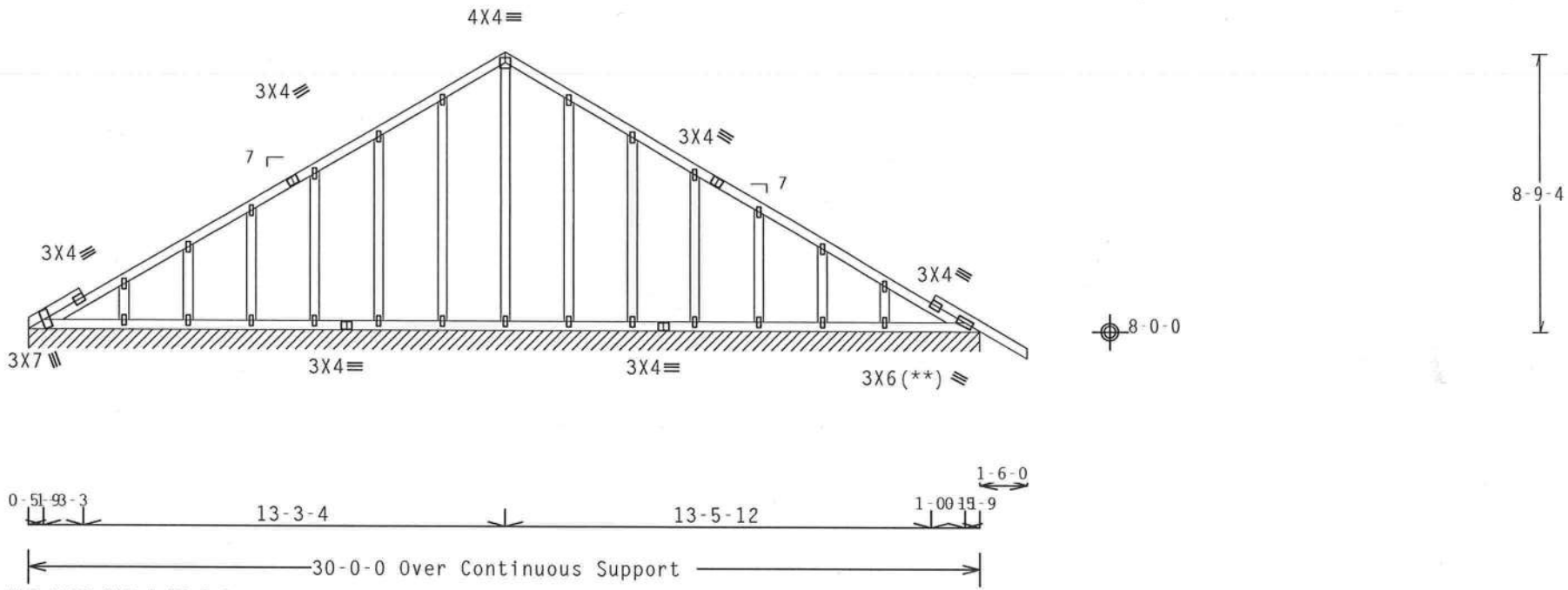

Note: All Plates Are 1.5X4 Except As Shown.

Design Crit: TPI-2002(STD)/FBC

PLT TYP. Wave Cq/RT=1.00(1.25)/10(0) 7.04.0 06 LC TY:1 FL/-/3/-/-/R/- Scale =.1875"/Ft.

ALPINE
Alpine Engineered Products, Inc.
1950 Marley Drive
Haines City, FL 33844
FL Certificate of Authorization # 567

WARNING TRUSSES REQUIRE EXTREME CARE IN FABRICATION, HANDLING, SHIPPING, INSTALLING AND BRACING. REFER TO BCSI 1-03 (BUILDING COMPONENT SAFETY INFORMATION), PUBLISHED BY TPI (TRUSS PLATE INSTITUTE, 583 D'ONOFRIO DR., SUITE 200, MADISON, WI 53719) AND WTCA (WOOD TRUSS COUNCIL OF AMERICA, 6300 ENTERPRISE LN, MADISON, WI 53719) FOR SAFETY PRACTICES PRIOR TO PERFORMING THESE FUNCTIONS. UNLESS OTHERWISE INDICATED, TOP CHORD SHALL HAVE PROPERLY ATTACHED STRUCTURAL PANELS AND BOTTOM CHORD SHALL HAVE A PROPERLY ATTACHED RIGID CEILING.

IMPORTANT FURNISH A COPY OF THIS DESIGN TO THE INSTALLATION CONTRACTOR. ALPINE ENGINEERED PRODUCTS, INC. SHALL NOT BE RESPONSIBLE FOR ANY DEVIATION FROM THIS DESIGN; ANY FAILURE TO BUILD THE TRUSS IN CONFORMANCE WITH TPI; OR FABRICATING, HANDLING, SHIPPING, INSTALLING & BRACING OF TRUSSES. DESIGN CONFORMS WITH APPLICABLE PROVISIONS OF NDS (NATIONAL DESIGN SPEC, BY AF&PA) AND TPI. ALPINE CONNECTOR PLATES ARE MADE OF 20/18/16GA (W,H/S/K) ASTM A653 GRADE 40/60 (W, K/H,S) GALV. STEEL. APPLY PLATES TO EACH FACE OF TRUSS AND, UNLESS OTHERWISE LOCATED ON THIS DESIGN. POSITION PER DRAWINGS 160A-Z. ANY INSPECTION OF PLATES FOLLOWED BY (1) SHALL BE PER ANNEX A3 OF TPI1-2002 SEC.3. A SEAL ON THIS DRAWING INDICATES ACCEPTANCE OF PROFESSIONAL ENGINEERING RESPONSIBILITY SOLELY FOR THE TRUSS COMPONENT DESIGN SHOWN. THE SUITABILITY AND USE OF THIS COMPONENT FOR ANY BUILDING IS THE RESPONSIBILITY OF THE BUILDING DESIGNER PER ANSI/TPI 1 SEC. 2.

ARTHUR R. FISHER
LICENSE
No. 59687
STATE OF FLORIDA
PROFESSIONAL ENGINEER

OCT 17 '05

TC LL	20.0 PSF	REF	R487-- 3819
TC DL	10.0 PSF	DATE	10/15/05
BC DL	10.0 PSF	DRW	HCUSR487 05288029
BC LL	0.0 PSF	HC-ENG	DF/AF
TOT.LD.	40.0 PSF	SEQN-	13230
DUR.FAC.	1.25		
SPACING	SEE ABOVE	JREF-	1SRC487_Z01

(5-434-MIKE STALVEY - B)

Top chord 2x4 SP #2 Dense
Bot chord 2x4 SP #2 Dense
Webs 2x4 SP #3

Deflection meets L/360 live and L/240 total load.

110 mph wind, 12.30 ft mean hgt, ASCE 7-98, CLOSED bldg, Located anywhere in roof, CAT II, EXP B, wind TC DL=5.0 psf, wind BC DL=5.0 psf.

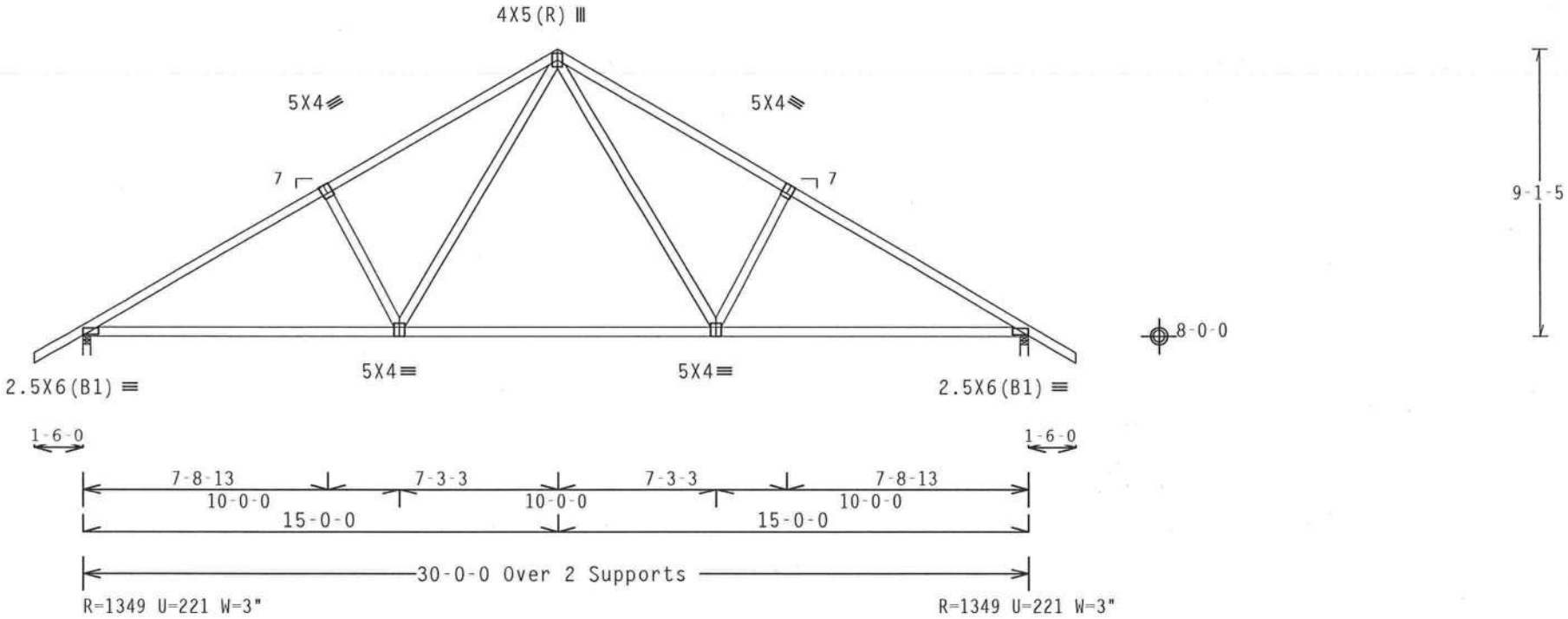

Design Crit: TPI-2002(STD)/FBC

PLT TYP. Wave

Cq/RT=1.00(1.25)/10(0) 7.04.0 QTY:8 FL/-/3/-/-/R/- Scale =.1875"/Ft.

ALPINE

Alpine Engineered Products, Inc.
1950 Marley Drive
Haines City, FL 33844
FL Certificate of Authorization # 567

WARNING TRUSSES REQUIRE EXTREME CARE IN FABRICATION, HANDLING, SHIPPING, INSTALLING AND BRACING. REFER TO BCSI 1-03 (BUILDING COMPONENT SAFETY INFORMATION), PUBLISHED BY TPI (TRUSS PLATE INSTITUTE, 583 D'ONOFRIO DR., SUITE 200, MADISON, WI 53719) AND WTCA (WOOD TRUSS COUNCIL OF AMERICA, 6300 ENTERPRISE LN, MADISON, WI 53719) FOR SAFETY PRACTICES PRIOR TO PERFORMING THESE FUNCTIONS. UNLESS OTHERWISE INDICATED, TOP CHORD SHALL HAVE PROPERLY ATTACHED STRUCTURAL PANELS AND BOTTOM CHORD SHALL HAVE A PROPERLY ATTACHED RIGID CEILING.

IMPORTANT FURNISH A COPY OF THIS DESIGN TO THE INSTALLATION CONTRACTOR. ALPINE ENGINEERED PRODUCTS, INC. SHALL NOT BE RESPONSIBLE FOR ANY DEVIATION FROM THIS DESIGN; ANY FAILURE TO BUILD THE TRUSS IN CONFORMANCE WITH TPI; OR FABRICATING, HANDLING, SHIPPING, INSTALLING & BRACING OF TRUSSES. DESIGN CONFORMS WITH APPLICABLE PROVISIONS OF NDS (NATIONAL DESIGN SPEC. BY AF&PA) AND TPI. ALPINE CONNECTOR PLATES ARE MADE OF 20/18/16GA (W.H/S/K) ASTM A653 GRADE 40/60 (W. K/H.S) GALV. STEEL. APPLY PLATES TO EACH FACE OF TRUSS AND, UNLESS OTHERWISE LOCATED ON THIS DESIGN, POSITION PER DRAWINGS 160A-Z. ANY INSPECTION OF PLATES FOLLOWED BY (1) SHALL BE PER ANNEX A3 OF TPI1-2002 SEC.3. A SEAL ON THIS DRAWING INDICATES ACCEPTANCE OF PROFESSIONAL ENGINEERING RESPONSIBILITY SOLELY FOR THE TRUSS COMPONENT DESIGN SHOWN. THE SUITABILITY AND USE OF THIS COMPONENT FOR ANY BUILDING IS THE RESPONSIBILITY OF THE BUILDING DESIGNER PER ANSI/TPI 1 SEC. 2.

ARTHUR R. FISHER LICENSE No.59687 STATE OF FLORIDA PROFESSIONAL ENGINEER

Oct 17 '05

TC LL	20.0 PSF	REF	R487-- 3820
TC DL	10.0 PSF	DATE	10/15/05
BC DL	10.0 PSF	DRW	HCUSR487 05288011
BC LL	0.0 PSF	HC-ENG	DF/AF *
TOT.LD.	40.0 PSF	SEQN-	13196
DUR.FAC.	1.25		
SPACING	24.0"	JREF-	1SRC487_Z01

(5-434-MIKE STALVEY - C)

Top chord 2x4 SP #2 Dense
Bot chord 2x4 SP #2 Dense
Webs 2x4 SP #3

110 mph wind, 8.70 ft mean hgt, ASCE 7-98, CLOSED bldg, not located within 4.50 ft from roof edge, CAT II, EXP B, wind TC DL=5.0 psf, wind BC DL=5.0 psf.

Deflection meets L/360 live and L/240 total load.

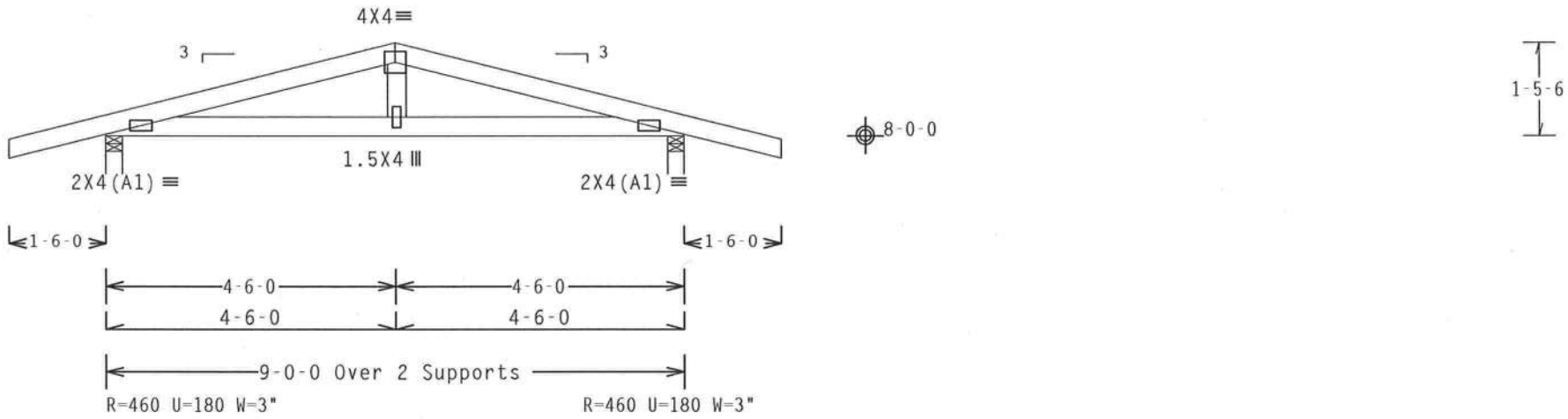

Design Crit: TPI-2002(STD)/FBC

PLT TYP. Wave — Cq/RT=1.00(1.25)/10(0) 7.04.03 - 7.05 — TY:7 — FL/-/3/-/-/R/- — Scale =.375"/Ft.

ALPINE

Alpine Engineered Products, Inc.
1950 Marley Drive
Haines City, FL 33844
FL Certificate of Authorization # 567

WARNING TRUSSES REQUIRE EXTREME CARE IN FABRICATION, HANDLING, SHIPPING, INSTALLING AND BRACING. REFER TO BCSI 1-03 (BUILDING COMPONENT SAFETY INFORMATION), PUBLISHED BY TPI (TRUSS PLATE INSTITUTE, 583 D'ONOFRIO DR., SUITE 200, MADISON, WI 53719) AND WTCA (WOOD TRUSS COUNCIL OF AMERICA, 6300 ENTERPRISE LN, MADISON, WI 53719) FOR SAFETY PRACTICES PRIOR TO PERFORMING THESE FUNCTIONS. UNLESS OTHERWISE INDICATED, TOP CHORD SHALL HAVE PROPERLY ATTACHED STRUCTURAL PANELS AND BOTTOM CHORD SHALL HAVE A PROPERLY ATTACHED RIGID CEILING.

IMPORTANT FURNISH A COPY OF THIS DESIGN TO THE INSTALLATION CONTRACTOR. ALPINE ENGINEERED PRODUCTS, INC. SHALL NOT BE RESPONSIBLE FOR ANY DEVIATION FROM THIS DESIGN; ANY FAILURE TO BUILD THE TRUSS IN CONFORMANCE WITH TPI; OR FABRICATING, HANDLING, SHIPPING, INSTALLING & BRACING OF TRUSSES. DESIGN CONFORMS WITH APPLICABLE PROVISIONS OF NDS (NATIONAL DESIGN SPEC. BY AF&PA) AND TPI. ALPINE CONNECTOR PLATES ARE MADE OF 20/18/16GA (W,H/S/K) ASTM A653 GRADE 40/60 (W, K/H,S) GALV. STEEL. APPLY PLATES TO EACH FACE OF TRUSS AND, UNLESS OTHERWISE LOCATED ON THIS DESIGN, POSITION PER DRAWINGS 160A-Z. ANY INSPECTION OF PLATES FOLLOWED BY (1) SHALL BE PER ANNEX A3 OF TPI1-2002 SEC.3. A SEAL ON THIS DRAWING INDICATES ACCEPTANCE OF PROFESSIONAL ENGINEERING RESPONSIBILITY SOLELY FOR THE TRUSS COMPONENT DESIGN SHOWN. THE SUITABILITY AND USE OF THIS COMPONENT FOR ANY BUILDING IS THE RESPONSIBILITY OF THE BUILDING DESIGNER PER ANSI/TPI 1 SEC. 2.

ARTHUR R. FISHER LICENSE No. 59687 STATE OF FLORIDA PROFESSIONAL ENGINEER

Oct 17 '05

TC LL	20.0 PSF	REF	R487-- 3821
TC DL	10.0 PSF	DATE	10/15/05
BC DL	10.0 PSF	DRW	HCUSR487 05288013
BC LL	0.0 PSF	HC-ENG	DF/AF *
TOT.LD.	40.0 PSF	SEQN-	13186
DUR.FAC.	1.25		
SPACING	24.0"	JREF-	1SRC487_Z01

(5-434-MIKE STALVEY - DO)

Top chord 2x4 SP #2 Dense
Bot chord 2x4 SP #2 Dense
Webs 2x4 SP #3

Deflection meets L/360 live and L/240 total load.

110 mph wind, 17.09 ft mean hgt, ASCE 7-98, CLOSED bldg, not located within 4.50 ft from roof edge, CAT II, EXP B, wind TC DL=5.0 psf, wind BC DL=5.0 psf.

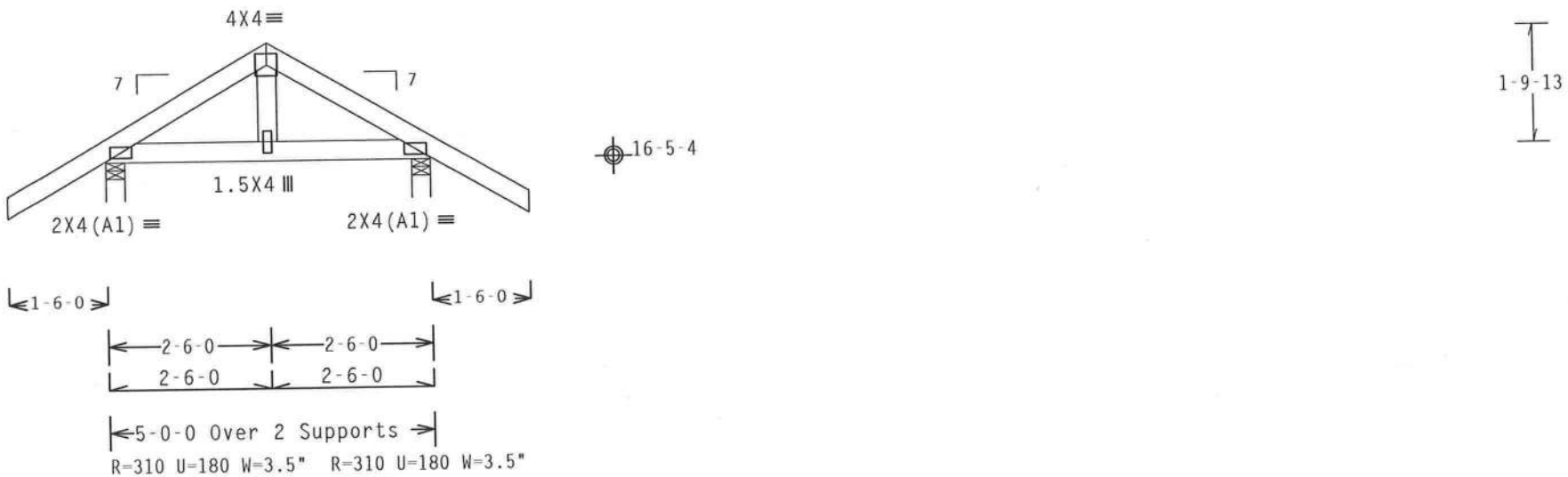

Design Crit: TPI-2002(STD)/FBC
Cq/RT=1.00(1.25)/10(0) 7.04.08 [illegible]Y:10 FL/-/3/-/-/R/-

Scale =.375"/Ft.

PLT TYP. Wave

ALPINE

Alpine Engineered Products, Inc.
1950 Marley Drive
Haines City, FL 33844
FL Certificate of Authorization # 567

WARNING TRUSSES REQUIRE EXTREME CARE IN FABRICATION, HANDLING, SHIPPING, INSTALLING AND BRACING. REFER TO BCSI 1-03 (BUILDING COMPONENT SAFETY INFORMATION), PUBLISHED BY TPI (TRUSS PLATE INSTITUTE, 583 D'ONOFRIO DR., SUITE 200, MADISON, WI 53719) AND WTCA (WOOD TRUSS COUNCIL OF AMERICA, 6300 ENTERPRISE LN, MADISON, WI 53719) FOR SAFETY PRACTICES PRIOR TO PERFORMING THESE FUNCTIONS. UNLESS OTHERWISE INDICATED, TOP CHORD SHALL HAVE PROPERLY ATTACHED STRUCTURAL PANELS AND BOTTOM CHORD SHALL HAVE A PROPERLY ATTACHED RIGID CEILING.

IMPORTANTFURNISH A COPY OF THIS DESIGN TO THE INSTALLATION CONTRACTOR. ALPINE ENGINEERED PRODUCTS, INC. SHALL NOT BE RESPONSIBLE FOR ANY DEVIATION FROM THIS DESIGN; ANY FAILURE TO BUILD THE TRUSS IN CONFORMANCE WITH TPI; OR FABRICATING, HANDLING, SHIPPING, INSTALLING & BRACING OF TRUSSES. DESIGN CONFORMS WITH APPLICABLE PROVISIONS OF NDS (NATIONAL DESIGN SPEC. BY AF&PA) AND TPI. ALPINE CONNECTOR PLATES ARE MADE OF 20/18/16GA (W,H/S/K) ASTM A653 GRADE 40/60 (W, K/H,S) GALV. STEEL. APPLY PLATES TO EACH FACE OF TRUSS AND, UNLESS OTHERWISE LOCATED ON THIS DESIGN, POSITION PER DRAWINGS 160A-Z. ANY INSPECTION OF PLATES FOLLOWED BY (I) SHALL BE PER ANNEX A3 OF TPI1-2002 SEC.3. A SEAL ON THIS DRAWING INDICATES ACCEPTANCE OF PROFESSIONAL ENGINEERING RESPONSIBILITY SOLELY FOR THE TRUSS COMPONENT DESIGN SHOWN. THE SUITABILITY AND USE OF THIS COMPONENT FOR ANY BUILDING IS THE RESPONSIBILITY OF THE BUILDING DESIGNER PER ANSI/TPI 1 SEC. 2.

ARTHUR R. FISHER
LICENSE
No. 59687
STATE OF FLORIDA
PROFESSIONAL ENGINEER

Oc[illegible] '05

TC LL	20.0 PSF	REF R487-- 3822
TC DL	10.0 PSF	DATE 10/15/05
BC DL	10.0 PSF	DRW HCUSR487 05288009
BC LL	0.0 PSF	HC-ENG DF/AF *
TOT.LD.	40.0 PSF	SEQN- 13535
DUR.FAC.	1.25	
SPACING	24.0"	JREF- 1SRC487_Z01

(5-434-MIKE STALVEY - DOV)

Top chord 2x4 SP #2 Dense
Bot chord 2x4 SP #2 Dense
Webs 2x4 SP #3

Deflection meets L/360 live and L/240 total load.

110 mph wind, 17.67 ft mean hgt, ASCE 7-98, CLOSED bldg, not located within 4.50 ft from roof edge, CAT II, EXP B, wind TC DL=5.0 psf, wind BC DL=5.0 psf.

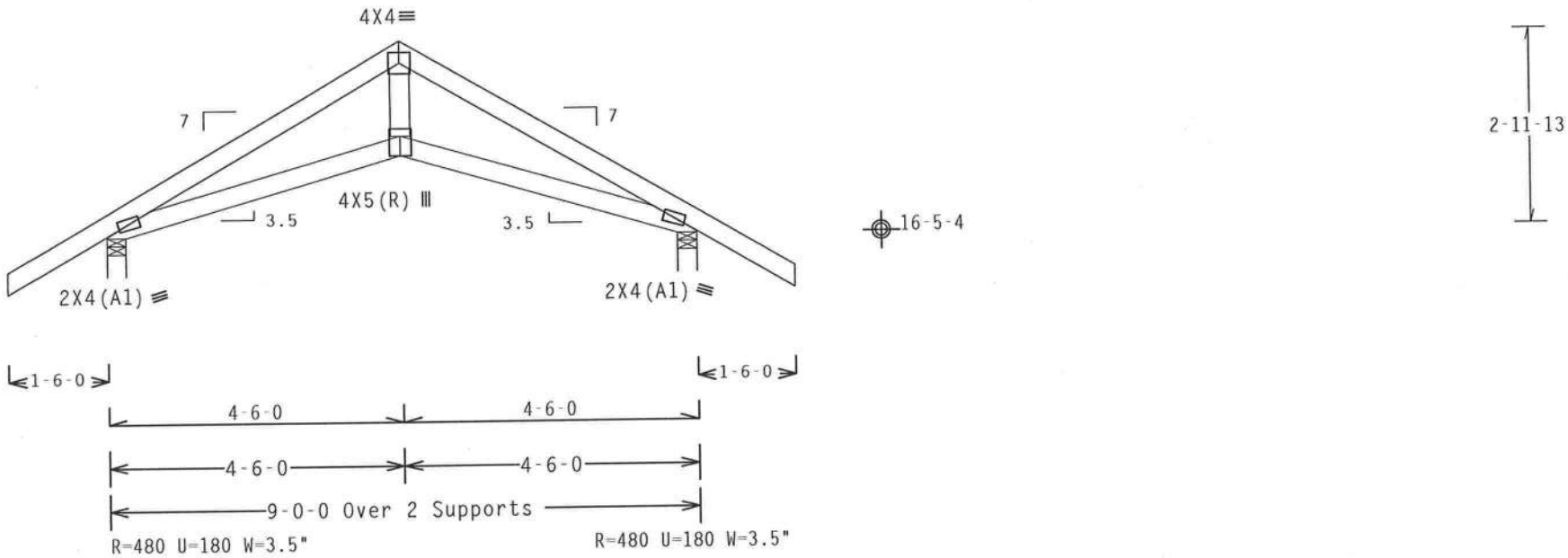

Design Crit: TPI-2002(STD)/FBC
Cq/RT=1.00(1.25)/10(0) 7.04.0

PLT TYP. Wave

QTY:5 FL/-/3/-/-/R/- Scale =.375"/Ft.

ALPINE
Alpine Engineered Products, Inc.
1950 Marley Drive
Haines City, FL 33844
FL Certificate of Authorization # 567

WARNING TRUSSES REQUIRE EXTREME CARE IN FABRICATION, HANDLING, SHIPPING, INSTALLING AND BRACING. REFER TO BCSI 1-03 (BUILDING COMPONENT SAFETY INFORMATION), PUBLISHED BY TPI (TRUSS PLATE INSTITUTE, 583 D'ONOFRIO DR., SUITE 200, MADISON, WI 53719) AND WTCA (WOOD TRUSS COUNCIL OF AMERICA, 6300 ENTERPRISE LN. MADISON, WI 53719) FOR SAFETY PRACTICES PRIOR TO PERFORMING THESE FUNCTIONS. UNLESS OTHERWISE INDICATED, TOP CHORD SHALL HAVE PROPERLY ATTACHED STRUCTURAL PANELS AND BOTTOM CHORD SHALL HAVE A PROPERLY ATTACHED RIGID CEILING.

IMPORTANTFURNISH A COPY OF THIS DESIGN TO THE INSTALLATION CONTRACTOR. ALPINE ENGINEERED PRODUCTS, INC. SHALL NOT BE RESPONSIBLE FOR ANY DEVIATION FROM THIS DESIGN; ANY FAILURE TO BUILD THE TRUSS IN CONFORMANCE WITH TPI; OR FABRICATING, HANDLING, SHIPPING, INSTALLING & BRACING OF TRUSSES. DESIGN CONFORMS WITH APPLICABLE PROVISIONS OF NDS (NATIONAL DESIGN SPEC. BY AF&PA) AND TPI. ALPINE CONNECTOR PLATES ARE MADE OF 20/18/16GA (W,H/S/K) ASTM A653 GRADE 40/60 (W, K/H,S) GALV. STEEL. APPLY PLATES TO EACH FACE OF TRUSS AND, UNLESS OTHERWISE LOCATED ON THIS DESIGN, POSITION PER DRAWINGS 160A-Z. ANY INSPECTION OF PLATES FOLLOWED BY (1) SHALL BE PER ANNEX A3 OF TPI1-2002 SEC.3. A SEAL ON THIS DRAWING INDICATES ACCEPTANCE OF PROFESSIONAL ENGINEERING RESPONSIBILITY SOLELY FOR THE TRUSS COMPONENT DESIGN SHOWN. THE SUITABILITY AND USE OF THIS COMPONENT FOR ANY BUILDING IS THE RESPONSIBILITY OF THE BUILDING DESIGNER PER ANSI/TPI 1 SEC. 2.

ARTHUR R. FISHER
LICENSE
No. 59687
STATE OF FLORIDA
PROFESSIONAL ENGINEER
Oct 17 '05

TC LL	20.0 PSF	REF R487-- 3823
TC DL	10.0 PSF	DATE 10/15/05
BC DL	10.0 PSF	DRW HCUSR487 05288014
BC LL	0.0 PSF	HC-ENG DF/AF *
TOT.LD.	40.0 PSF	SEQN- 13539
DUR.FAC.	1.25	
SPACING	24.0"	JREF- 1SRC487_Z01

(5-434-MIKE STALVEY - DOG)

Top chord 2x4 SP #2 Dense
Bot chord 2x4 SP #2 Dense
Webs 2x4 SP #3

SPECIAL LOADS
------(LUMBER DUR.FAC.=1.25 / PLATE DUR.FAC.=1.25)

TC - From	85 PLF	at	-1.50	to	85 PLF	at	1.52
TC - From	85 PLF	at	1.52	to	85 PLF	at	2.50
TC - From	85 PLF	at	2.50	to	85 PLF	at	5.15
TC - From	85 PLF	at	5.15	to	85 PLF	at	6.50
BC - From	5 PLF	at	-1.50	to	5 PLF	at	0.00
BC - From	20 PLF	at	0.00	to	20 PLF	at	5.00
BC - From	5 PLF	at	5.00	to	5 PLF	at	5.15
BC - From	5 PLF	at	5.15	to	5 PLF	at	6.50

THE BUILDING DESIGNER IS RESPONSIBLE FOR THE DESIGN OF THE ROOF AND CEILING DIAPHRAGMS, GABLE END SHEAR WALLS, AND SUPPORTING SHEAR WALLS. SHEAR WALLS MUST PROVIDE CONTINUOUS LATERAL RESTRAINT TO THE GABLE END. ALL CONNECTIONS TO BE DESIGNED BY THE BUILDING DESIGNER.

(**) 2 plate(s) require special positioning. Refer to scaled plate plot details for special positioning requirements.

110 mph wind, 16.92 ft mean hgt, ASCE 7-98, CLOSED bldg, not located within 4.50 ft from roof edge, CAT II, EXP B, wind TC DL=5.0 psf, wind BC DL=5.0 psf.

See DWGS A11030EC1103 & GBLLETIN0405 for more requirements.

Deflection meets L/360 live and L/240 total load.

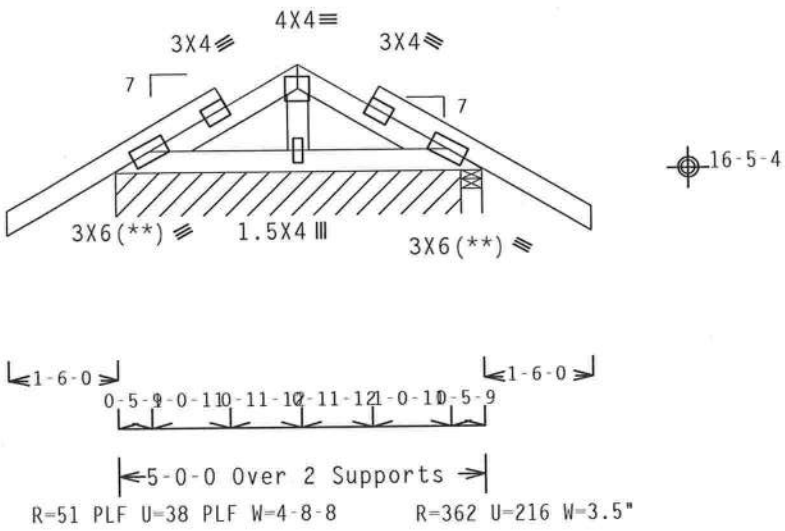

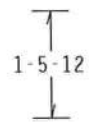

Design Crit: TPI-2002(STD)/FBC
Cq/RT=1.00(1.25)/10(0) 7.04.0[illegible] TY:2 FL/-/3/-/-/R/- Scale =.375"/Ft.

PLT TYP. Wave

ALPINE
Alpine Engineered Products, Inc.
1950 Marley Drive
Haines City, FL 33844
FL Certificate of Authorization # 567

WARNING TRUSSES REQUIRE EXTREME CARE IN FABRICATION, HANDLING, SHIPPING, INSTALLING AND BRACING. REFER TO BCSI 1-03 (BUILDING COMPONENT SAFETY INFORMATION), PUBLISHED BY TPI (TRUSS PLATE INSTITUTE, 583 D'ONOFRIO DR., SUITE 200, MADISON, WI 53719) AND WTCA (WOOD TRUSS COUNCIL OF AMERICA, 6300 ENTERPRISE LN, MADISON, WI 53719) FOR SAFETY PRACTICES PRIOR TO PERFORMING THESE FUNCTIONS. UNLESS OTHERWISE INDICATED, TOP CHORD SHALL HAVE PROPERLY ATTACHED STRUCTURAL PANELS AND BOTTOM CHORD SHALL HAVE A PROPERLY ATTACHED RIGID CEILING.

IMPORTANT FURNISH A COPY OF THIS DESIGN TO THE INSTALLATION CONTRACTOR. ALPINE ENGINEERED PRODUCTS, INC. SHALL NOT BE RESPONSIBLE FOR ANY DEVIATION FROM THIS DESIGN; ANY FAILURE TO BUILD THE TRUSS IN CONFORMANCE WITH TPI; OR FABRICATING, HANDLING, SHIPPING, INSTALLING & BRACING OF TRUSSES. DESIGN CONFORMS WITH APPLICABLE PROVISIONS OF NDS (NATIONAL DESIGN SPEC. BY AF&PA) AND TPI. ALPINE CONNECTOR PLATES ARE MADE OF 20/18/16GA (W,H/S/K) ASTM A653 GRADE 40/60 (W, K/H,S) GALV. STEEL. APPLY PLATES TO EACH FACE OF TRUSS AND, UNLESS OTHERWISE LOCATED ON THIS DESIGN, POSITION PER DRAWINGS 160A-Z. ANY INSPECTION OF PLATES FOLLOWED BY (1) SHALL BE PER ANNEX A3 OF TPI1-2002 SEC.3. A SEAL ON THIS DRAWING INDICATES ACCEPTANCE OF PROFESSIONAL ENGINEERING RESPONSIBILITY SOLELY FOR THE TRUSS COMPONENT DESIGN SHOWN. THE SUITABILITY AND USE OF THIS COMPONENT FOR ANY BUILDING IS THE RESPONSIBILITY OF THE BUILDING DESIGNER PER ANSI/TPI 1 SEC. 2.

ARTHUR R. FISHER LICENSE No.59687 STATE OF FLORIDA PROFESSIONAL ENGINEER
Oct 27 '05

TC LL	20.0 PSF	REF	R487-- 3824
TC DL	10.0 PSF	DATE	10/15/05
BC DL	10.0 PSF	DRW	HCUSR487 05288007
BC LL	0.0 PSF	HC-ENG	DF/AF
TOT.LD.	40.0 PSF	SEQN-	13548
DUR.FAC.	1.25		
SPACING	SEE ABOVE	JREF-	1SRC487_Z01

Top chord 2x4 SP #2 Dense
Bot chord 2x4 SP #2 Dense
Webs 2x4 SP #3

SPECIAL LOADS
------(LUMBER DUR.FAC.=1.25 / PLATE DUR.FAC.=1.25)

TC - From	85 PLF	at -1.50 to	85 PLF	at	10.50
BC - From	5 PLF	at -1.50 to	5 PLF	at	0.00
BC - From	21 PLF	at 0.00 to	21 PLF	at	9.00
BC - From	5 PLF	at 9.00 to	5 PLF	at	10.50

THE BUILDING DESIGNER IS RESPONSIBLE FOR THE DESIGN OF THE ROOF AND CEILING DIAPHRAGMS, GABLE END SHEAR WALLS, AND SUPPORTING SHEAR WALLS. SHEAR WALLS MUST PROVIDE CONTINUOUS LATERAL RESTRAINT TO THE GABLE END. ALL CONNECTIONS TO BE DESIGNED BY THE BUILDING DESIGNER.

+ MEMBER TO BE LATERALLY BRACED FOR WIND LOADS PERPENDICULAR TO TRUSS. BRACING SYSTEM TO BE DESIGNED AND FURNISHED BY OTHERS.

(**) 6 plate(s) require special positioning. Refer to scaled plate plot details for special positioning requirements.

110 mph wind, 17.50 ft mean hgt, ASCE 7-98, CLOSED bldg, not located within 4.50 ft from roof edge, CAT II, EXP B, wind TC DL=5.0 psf, wind BC DL=5.0 psf.

See DWGS A11030EC1103 & GBLLETIN0405 for more requirements.

Deflection meets L/360 live and L/240 total load.

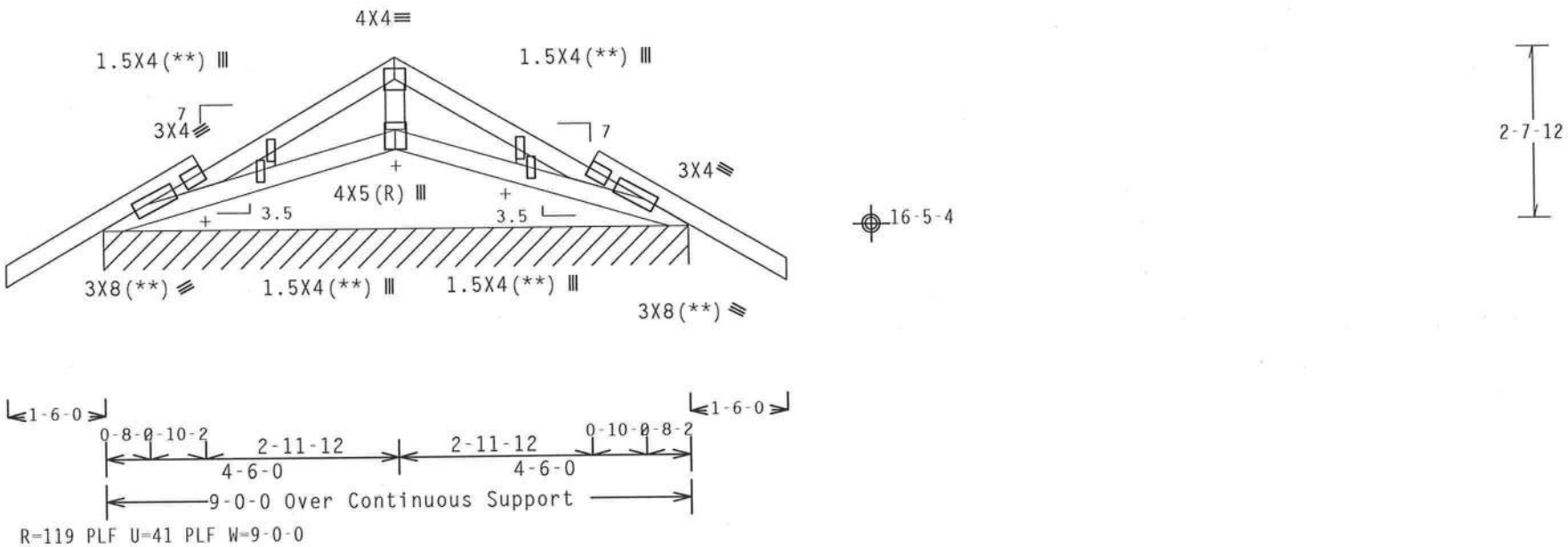

Design Crit: TPI-2002(STD)/FBC
Cq/RT=1.00(1.25)/10(0) 7.04.0 TY:1 FL/-/3/-/-/R/- Scale =.375"/Ft.

PLT TYP. Wave

ALPINE
Alpine Engineered Products, Inc.
1950 Marley Drive
Haines City, FL 33844
FL Certificate of Authorization # 567

WARNING TRUSSES REQUIRE EXTREME CARE IN FABRICATION, HANDLING, SHIPPING, INSTALLING AND BRACING. REFER TO BCSI 1-03 (BUILDING COMPONENT SAFETY INFORMATION), PUBLISHED BY TPI (TRUSS PLATE INSTITUTE, 583 D'ONOFRIO DR., SUITE 200, MADISON, WI 53719) AND WTCA (WOOD TRUSS COUNCIL OF AMERICA, 6300 ENTERPRISE LN, MADISON, WI 53719) FOR SAFETY PRACTICES PRIOR TO PERFORMING THESE FUNCTIONS. UNLESS OTHERWISE INDICATED, TOP CHORD SHALL HAVE PROPERLY ATTACHED STRUCTURAL PANELS AND BOTTOM CHORD SHALL HAVE A PROPERLY ATTACHED RIGID CEILING.

IMPORTANTFURNISH A COPY OF THIS DESIGN TO THE INSTALLATION CONTRACTOR. ALPINE ENGINEERED PRODUCTS, INC. SHALL NOT BE RESPONSIBLE FOR ANY DEVIATION FROM THIS DESIGN; ANY FAILURE TO BUILD THE TRUSS IN CONFORMANCE WITH TPI; OR FABRICATING, HANDLING, SHIPPING, INSTALLING & BRACING OF TRUSSES. DESIGN CONFORMS WITH APPLICABLE PROVISIONS OF NDS (NATIONAL DESIGN SPEC. BY AF&PA) AND TPI. ALPINE CONNECTOR PLATES ARE MADE OF 20/18/16GA (W,H/S/K) ASTM A653 GRADE 40/60 (W, K/H,S) GALV. STEEL. APPLY PLATES TO EACH FACE OF TRUSS AND, UNLESS OTHERWISE LOCATED ON THIS DESIGN, POSITION PER DRAWINGS 160A-Z. ANY INSPECTION OF PLATES FOLLOWED BY (1) SHALL BE PER ANNEX A3 OF TPI1-2002 SEC.3. A SEAL ON THIS DRAWING INDICATES ACCEPTANCE OF PROFESSIONAL ENGINEERING RESPONSIBILITY SOLELY FOR THE TRUSS COMPONENT DESIGN SHOWN. THE SUITABILITY AND USE OF THIS COMPONENT FOR ANY BUILDING IS THE RESPONSIBILITY OF THE BUILDING DESIGNER PER ANSI/TPI 1 SEC. 2.

ARTHUR R. FISHER LICENSE No.59687 STATE OF FLORIDA PROFESSIONAL ENGINEER
Oct 17 '05

TC LL	20.0 PSF	REF R487-- 3825
TC DL	10.0 PSF	DATE 10/15/05
BC DL	10.0 PSF	DRW HCUSR487 05288012
BC LL	0.0 PSF	HC-ENG DF/AF
TOT.LD.	40.0 PSF	SEQN- 13567
DUR.FAC.	1.25	
SPACING	SEE ABOVE	JREF- 1SRC487_Z01

(5-434-MIKE STALVEY - G-1)

Top chord 2x4 SP #2 Dense
Bot chord 2x6 SP #2
Webs 2x4 SP #3

110 mph wind, 21.02 ft mean hgt, ASCE 7-98, CLOSED bldg, not located within 4.50 ft from roof edge, CAT II, EXP B, wind TC DL=5.0 psf, wind BC DL=5.0 psf.

Deflection meets L/360 live and L/240 total load.

The TC of this truss shall be braced with attached spans at 24" OC in lieu of structural sheathing.

SPECIAL LOADS
------(LUMBER DUR.FAC.=1.25 / PLATE DUR.FAC.=1.25)
TC - From 60 PLF at 0.00 to 60 PLF at 8.42
BC - From 20 PLF at 0.00 to 20 PLF at 8.42
BC - 713 LB Conc. Load at 1.10, 3.10, 5.10, 7.10

End verticals not exposed to wind pressure.

Truss must be installed as shown with top chord up.

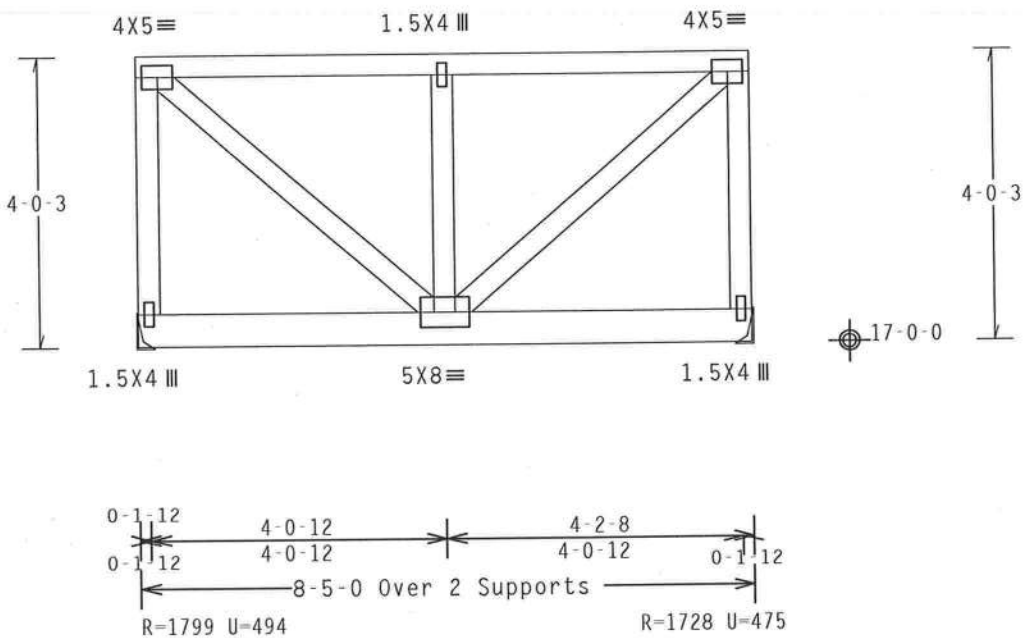

Design Crit: TPI-2002(STD)/FBC
Cq/RT=1.00(1.25)/10(0) 7.04.0[illegible] QTY:1 FL/-/3/-/-/R/- Scale =.375"/Ft.

PLT TYP. Wave

ALPINE
Alpine Engineered Products, Inc.
1950 Marley Drive
Haines City, FL 33844
FL Certificate of Authorization # 567

WARNING TRUSSES REQUIRE EXTREME CARE IN FABRICATION, HANDLING, SHIPPING, INSTALLING AND BRACING. REFER TO BCSI 1-03 (BUILDING COMPONENT SAFETY INFORMATION), PUBLISHED BY TPI (TRUSS PLATE INSTITUTE, 583 D'ONOFRIO DR., SUITE 200, MADISON, WI 53719) AND WTCA (WOOD TRUSS COUNCIL OF AMERICA, 6300 ENTERPRISE LN, MADISON, WI 53719) FOR SAFETY PRACTICES PRIOR TO PERFORMING THESE FUNCTIONS. UNLESS OTHERWISE INDICATED, TOP CHORD SHALL HAVE PROPERLY ATTACHED STRUCTURAL PANELS AND BOTTOM CHORD SHALL HAVE A PROPERLY ATTACHED RIGID CEILING.

IMPORTANTFURNISH A COPY OF THIS DESIGN TO THE INSTALLATION CONTRACTOR. ALPINE ENGINEERED PRODUCTS, INC. SHALL NOT BE RESPONSIBLE FOR ANY DEVIATION FROM THIS DESIGN; ANY FAILURE TO BUILD THE TRUSS IN CONFORMANCE WITH TPI; OR FABRICATING, HANDLING, SHIPPING, INSTALLING & BRACING OF TRUSSES. DESIGN CONFORMS WITH APPLICABLE PROVISIONS OF NDS (NATIONAL DESIGN SPEC, BY AF&PA) AND TPI. ALPINE CONNECTOR PLATES ARE MADE OF 20/18/16GA (W,H/S/K) ASTM A653 GRADE 40/60 (W, K/H,S) GALV. STEEL. APPLY PLATES TO EACH FACE OF TRUSS AND, UNLESS OTHERWISE LOCATED ON THIS DESIGN, POSITION PER DRAWINGS 160A-Z. ANY INSPECTION OF PLATES FOLLOWED BY (I) SHALL BE PER ANNEX A3 OF TPI1-2002 SEC.3. A SEAL ON THIS DRAWING INDICATES ACCEPTANCE OF PROFESSIONAL ENGINEERING RESPONSIBILITY SOLELY FOR THE TRUSS COMPONENT DESIGN SHOWN. THE SUITABILITY AND USE OF THIS COMPONENT FOR ANY BUILDING IS THE RESPONSIBILITY OF THE BUILDING DESIGNER PER ANSI/TPI 1 SEC. 2.

ARTHUR R. FISHER
LICENSE
No. 59687
STATE OF FLORIDA
PROFESSIONAL ENGINEER
Oct [illegible] '05

TC LL	20.0 PSF	REF	R487-- 3826
TC DL	10.0 PSF	DATE	10/15/05
BC DL	10.0 PSF	DRW	HCUSR487 05288002
BC LL	0.0 PSF	HC-ENG	DF/AF
TOT.LD.	40.0 PSF	SEQN-	13373
DUR.FAC.	1.25		
SPACING	24.0"	JREF-	1SRC487_Z01

(5-434-MIKE STALVEY - CJ1)

Top chord 2x4 SP #2 Dense
Bot chord 2x4 SP #2 Dense

Deflection meets L/360 live and L/240 total load.

110 mph wind, 8.26 ft mean hgt, ASCE 7-98, CLOSED bldg, Located anywhere in roof, CAT II, EXP B, wind TC DL=5.0 psf, wind BC DL=5.0 psf.

Design Crit: TPI-2002(STD)/FBC
Cq/RT=1.00(1.25)/10(0) 7.04.0[illegible] QTY:4 FL/-/3/-/-/R/- Scale =.375"/Ft.

PLT TYP. Wave

ALPINE
Alpine Engineered Products, Inc.
1950 Marley Drive
Haines City, FL 33844
FL Certificate of Authorization # 567

WARNING TRUSSES REQUIRE EXTREME CARE IN FABRICATION, HANDLING, SHIPPING, INSTALLING AND BRACING. REFER TO BCSI 1-03 (BUILDING COMPONENT SAFETY INFORMATION), PUBLISHED BY TPI (TRUSS PLATE INSTITUTE, 583 D'ONOFRIO DR., SUITE 200, MADISON, WI 53719) AND WTCA (WOOD TRUSS COUNCIL OF AMERICA, 6300 ENTERPRISE LN, MADISON, WI 53719) FOR SAFETY PRACTICES PRIOR TO PERFORMING THESE FUNCTIONS. UNLESS OTHERWISE INDICATED, TOP CHORD SHALL HAVE PROPERLY ATTACHED STRUCTURAL PANELS AND BOTTOM CHORD SHALL HAVE A PROPERLY ATTACHED RIGID CEILING.

IMPORTANTFURNISH A COPY OF THIS DESIGN TO THE INSTALLATION CONTRACTOR. ALPINE ENGINEERED PRODUCTS, INC. SHALL NOT BE RESPONSIBLE FOR ANY DEVIATION FROM THIS DESIGN; ANY FAILURE TO BUILD THE TRUSS IN CONFORMANCE WITH TPI; OR FABRICATING, HANDLING, SHIPPING, INSTALLING & BRACING OF TRUSSES. DESIGN CONFORMS WITH APPLICABLE PROVISIONS OF NDS (NATIONAL DESIGN SPEC. BY AF&PA) AND TPI. ALPINE CONNECTOR PLATES ARE MADE OF 20/18/16GA (W.H/S/K) ASTM A653 GRADE 40/60 (W. K/H.S) GALV. STEEL. APPLY PLATES TO EACH FACE OF TRUSS AND, UNLESS OTHERWISE LOCATED ON THIS DESIGN, POSITION PER DRAWINGS 160A-Z. ANY INSPECTION OF PLATES FOLLOWED BY (1) SHALL BE PER ANNEX A3 OF TPI1-2002 SEC.3. A SEAL ON THIS DRAWING INDICATES ACCEPTANCE OF PROFESSIONAL ENGINEERING RESPONSIBILITY SOLELY FOR THE TRUSS COMPONENT DESIGN SHOWN. THE SUITABILITY AND USE OF THIS COMPONENT FOR ANY BUILDING IS THE RESPONSIBILITY OF THE BUILDING DESIGNER PER ANSI/TPI 1 SEC. 2.

ARTHUR R. FISHER LICENSE No. 59687 STATE OF FLORIDA PROFESSIONAL ENGINEER

Oct 17 '05

TC LL	20.0 PSF	REF R487-- 3827
TC DL	10.0 PSF	DATE 10/15/05
BC DL	10.0 PSF	DRW HCUSR487 05288019
BC LL	0.0 PSF	HC-ENG DF/AF
TOT.LD.	40.0 PSF	SEQN- 13239
DUR.FAC.	1.25	
SPACING	24.0"	JREF- 1SRC487_Z01

(5-434-MIKE STALVEY - HJ7)

Top chord 2x4 SP #2 Dense
Bot chord 2x4 SP #2 Dense
Webs 2x4 SP #3

Hipjack supports 7-0-0 setback jacks with no webs.

Provide (2) 16d common nails(0.162"x3.5"), toe nailed at Top chord.
Provide (3) 16d common nails(0.162"x3.5"), toe nailed at Bot chord.

110 mph wind, 15.00 ft mean hgt, ASCE 7-98, CLOSED bldg, Located anywhere in roof, CAT II, EXP B, wind TC DL=5.0 psf, wind BC DL=5.0 psf.

Deflection meets L/360 live and L/240 total load.

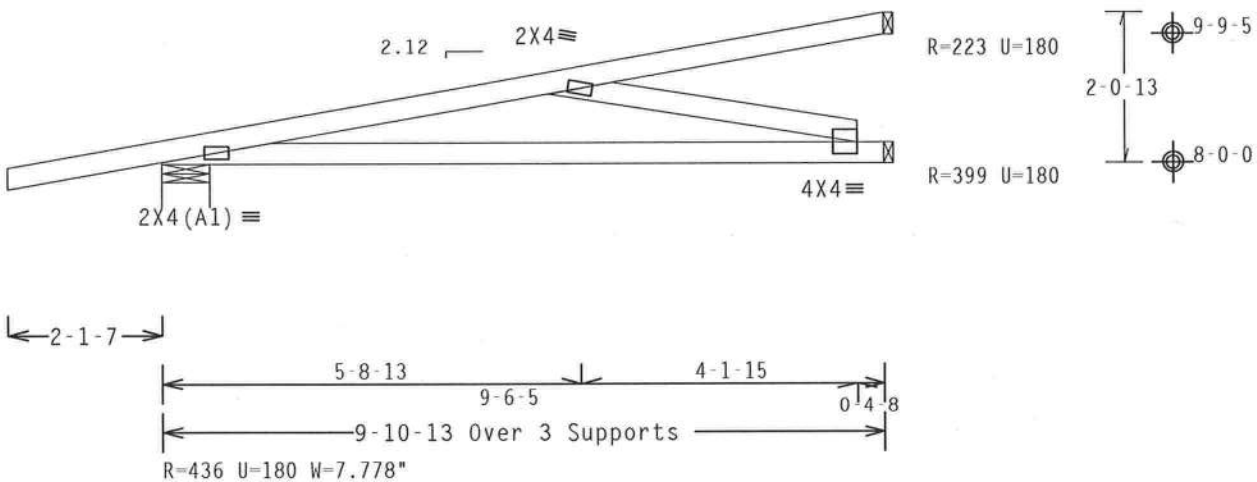

Design Crit: TPI-2002(STD)/FBC
Cq/RT=1.00(1.25)/10(0) 7.04.0 QTY:2 FL/-/3/-/-/R/-

PLT TYP. Wave

Scale =.375"/Ft.

ALPINE
Alpine Engineered Products, Inc.
1950 Marley Drive
Haines City, FL 33844
FL Certificate of Authorization # 567

WARNING TRUSSES REQUIRE EXTREME CARE IN FABRICATION, HANDLING, SHIPPING, INSTALLING AND BRACING. REFER TO BCSI 1-03 (BUILDING COMPONENT SAFETY INFORMATION), PUBLISHED BY TPI (TRUSS PLATE INSTITUTE, 583 D'ONOFRIO DR., SUITE 200, MADISON, WI 53719) AND WTCA (WOOD TRUSS COUNCIL OF AMERICA, 6300 ENTERPRISE LN, MADISON, WI 53719) FOR SAFETY PRACTICES PRIOR TO PERFORMING THESE FUNCTIONS. UNLESS OTHERWISE INDICATED, TOP CHORD SHALL HAVE PROPERLY ATTACHED STRUCTURAL PANELS AND BOTTOM CHORD SHALL HAVE A PROPERLY ATTACHED RIGID CEILING.

IMPORTANTFURNISH A COPY OF THIS DESIGN TO THE INSTALLATION CONTRACTOR. ALPINE ENGINEERED PRODUCTS, INC. SHALL NOT BE RESPONSIBLE FOR ANY DEVIATION FROM THIS DESIGN; ANY FAILURE TO BUILD THE TRUSS IN CONFORMANCE WITH TPI; OR FABRICATING, HANDLING, SHIPPING, INSTALLING & BRACING OF TRUSSES. DESIGN CONFORMS WITH APPLICABLE PROVISIONS OF NDS (NATIONAL DESIGN SPEC. BY AF&PA) AND TPI. ALPINE CONNECTOR PLATES ARE MADE OF 20/18/16GA (W,H/S/K) ASTM A653 GRADE 40/60 (W, K/H,S) GALV. STEEL. APPLY PLATES TO EACH FACE OF TRUSS AND, UNLESS OTHERWISE LOCATED ON THIS DESIGN, POSITION PER DRAWINGS 160A-Z. ANY INSPECTION OF PLATES FOLLOWED BY (I) SHALL BE PER ANNEX A3 OF TPI1-2002 SEC.3. A SEAL ON THIS DRAWING INDICATES ACCEPTANCE OF PROFESSIONAL ENGINEERING RESPONSIBILITY SOLELY FOR THE TRUSS COMPONENT DESIGN SHOWN. THE SUITABILITY AND USE OF THIS COMPONENT FOR ANY BUILDING IS THE RESPONSIBILITY OF THE BUILDING DESIGNER PER ANSI/TPI 1 SEC. 2.

ARTHUR R. FISHER LICENSE No. 59687 STATE OF FLORIDA PROFESSIONAL ENGINEER
Oct 1 '05

TC LL	20.0 PSF	REF	R487-- 3828
TC DL	10.0 PSF	DATE	10/15/05
BC DL	10.0 PSF	DRW	HCUSR487 05288016
BC LL	0.0 PSF	HC-ENG	DF/AF
TOT.LD.	40.0 PSF	SEQN-	13261
DUR.FAC.	1.25		
SPACING	SEE ABOVE	JREF-	1SRC487_Z01

(5-434-MIKE STALVEY - CJ3)

Top chord 2x4 SP #2 Dense
Bot chord 2x4 SP #2 Dense

Deflection meets L/360 live and L/240 total load.

110 mph wind, 8.51 ft mean hgt, ASCE 7-98, CLOSED bldg, Located anywhere in roof, CAT II, EXP B, wind TC DL=5.0 psf, wind BC DL=5.0 psf.

Provide (2) 16d common nails(0.162"x3.5"), toe nailed at Top chord.
Provide (2) 16d common nails(0.162"x3.5"), toe nailed at Bot chord.

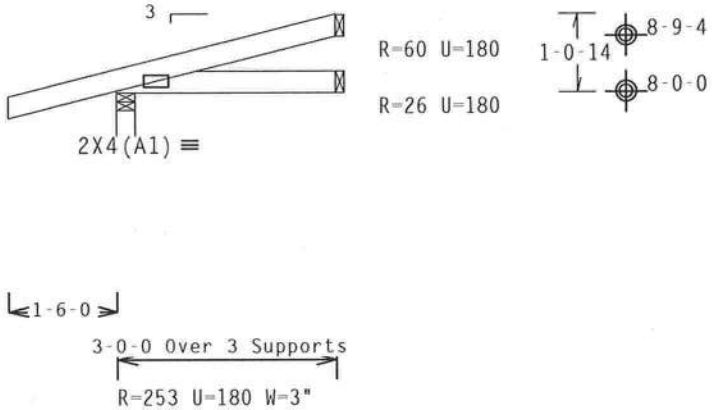

Design Crit: TPI-2002(STD)/FBC
Cq/RT=1.00(1.25)/10(0) 7.04.0

PLT TYP. Wave QTY:4 FL/-/3/-/-/R/- Scale =.375"/Ft.

ALPINE
Alpine Engineered Products, Inc.
1950 Marley Drive
Haines City, FL 33844
FL Certificate of Authorization # 567

WARNING TRUSSES REQUIRE EXTREME CARE IN FABRICATION, HANDLING, SHIPPING, INSTALLING AND BRACING. REFER TO BCSI 1-03 (BUILDING COMPONENT SAFETY INFORMATION), PUBLISHED BY TPI (TRUSS PLATE INSTITUTE, 583 D'ONOFRIO DR., SUITE 200, MADISON, WI 53719) AND WTCA (WOOD TRUSS COUNCIL OF AMERICA, 6300 ENTERPRISE LN, MADISON, WI 53719) FOR SAFETY PRACTICES PRIOR TO PERFORMING THESE FUNCTIONS. UNLESS OTHERWISE INDICATED, TOP CHORD SHALL HAVE PROPERLY ATTACHED STRUCTURAL PANELS AND BOTTOM CHORD SHALL HAVE A PROPERLY ATTACHED RIGID CEILING.

IMPORTANTFURNISH A COPY OF THIS DESIGN TO THE INSTALLATION CONTRACTOR. ALPINE ENGINEERED PRODUCTS, INC. SHALL NOT BE RESPONSIBLE FOR ANY DEVIATION FROM THIS DESIGN; ANY FAILURE TO BUILD THE TRUSS IN CONFORMANCE WITH TPI; OR FABRICATING, HANDLING, SHIPPING, INSTALLING & BRACING OF TRUSSES. DESIGN CONFORMS WITH APPLICABLE PROVISIONS OF NDS (NATIONAL DESIGN SPEC. BY AF&PA) AND TPI. ALPINE CONNECTOR PLATES ARE MADE OF 20/18/16GA (W,H/S/K) ASTM A653 GRADE 40/60 (W, K/H,S) GALV. STEEL. APPLY PLATES TO EACH FACE OF TRUSS AND, UNLESS OTHERWISE LOCATED ON THIS DESIGN, POSITION PER DRAWINGS 160A-Z. ANY INSPECTION OF PLATES FOLLOWED BY (1) SHALL BE PER ANNEX A3 OF TPI1-2002 SEC.3. A SEAL ON THIS DRAWING INDICATES ACCEPTANCE OF PROFESSIONAL ENGINEERING RESPONSIBILITY SOLELY FOR THE TRUSS COMPONENT DESIGN SHOWN. THE SUITABILITY AND USE OF THIS COMPONENT FOR ANY BUILDING IS THE RESPONSIBILITY OF THE BUILDING DESIGNER PER ANSI/TPI 1 SEC. 2.

ARTHUR R. FISHER LICENSE No. 50687 STATE OF FLORIDA PROFESSIONAL ENGINEER
Oct 17 '05

TC LL	20.0 PSF	REF R487-- 3829
TC DL	10.0 PSF	DATE 10/15/05
BC DL	10.0 PSF	DRW HCUSR487 05288018
BC LL	0.0 PSF	HC-ENG DF/AF
TOT.LD.	40.0 PSF	SEQN- 13244
DUR.FAC.	1.25	
SPACING	24.0"	JREF- 1SRC487_Z01

(5-434-MIKE STALVEY - CJ5)

Top chord 2x4 SP #2 Dense
Bot chord 2x4 SP #2 Dense

Deflection meets L/360 live and L/240 total load.

110 mph wind, 8.76 ft mean hgt, ASCE 7-98, CLOSED bldg, not located within 4.50 ft from roof edge, CAT II, EXP B, wind TC DL=5.0 psf, wind BC DL=5.0 psf.

Provide (2) 16d common nails(0.162"x3.5"), toe nailed at Top chord.
Provide (2) 16d common nails(0.162"x3.5"), toe nailed at Bot chord.

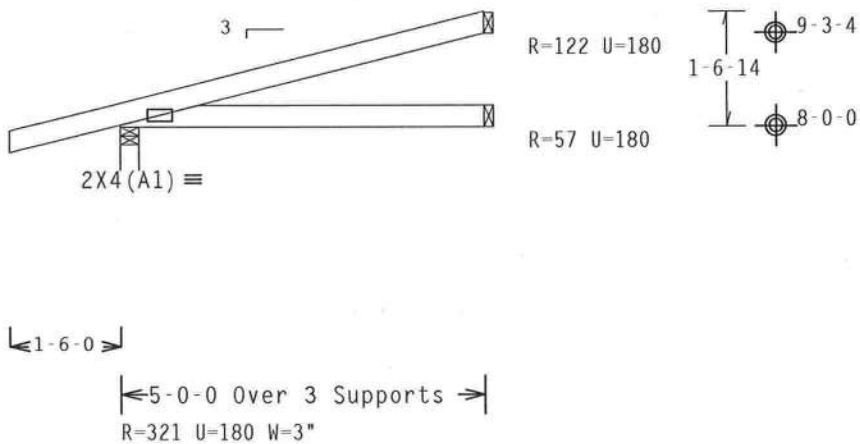

Design Crit: TPI-2002(STD)/FBC
Cq/RT=1.00(1.25)/10(0) 7.04.08

PLT TYP. Wave QTY:4 FL/-/3/-/-/R/- Scale =.375"/Ft.

ALPINE
Alpine Engineered Products, Inc.
1950 Marley Drive
Haines City, FL 33844
FL Certificate of Authorization # 567

WARNING TRUSSES REQUIRE EXTREME CARE IN FABRICATION, HANDLING, SHIPPING, INSTALLING AND BRACING. REFER TO BCSI 1-03 (BUILDING COMPONENT SAFETY INFORMATION), PUBLISHED BY TPI (TRUSS PLATE INSTITUTE, 583 D'ONOFRIO DR., SUITE 200, MADISON, WI 53719) AND WTCA (WOOD TRUSS COUNCIL OF AMERICA, 6300 ENTERPRISE LN, MADISON, WI 53719) FOR SAFETY PRACTICES PRIOR TO PERFORMING THESE FUNCTIONS. UNLESS OTHERWISE INDICATED, TOP CHORD SHALL HAVE PROPERLY ATTACHED STRUCTURAL PANELS AND BOTTOM CHORD SHALL HAVE A PROPERLY ATTACHED RIGID CEILING.

IMPORTANT FURNISH A COPY OF THIS DESIGN TO THE INSTALLATION CONTRACTOR. ALPINE ENGINEERED PRODUCTS, INC. SHALL NOT BE RESPONSIBLE FOR ANY DEVIATION FROM THIS DESIGN; ANY FAILURE TO BUILD THE TRUSS IN CONFORMANCE WITH TPI; OR FABRICATING, HANDLING, SHIPPING, INSTALLING & BRACING OF TRUSSES. DESIGN CONFORMS WITH APPLICABLE PROVISIONS OF NDS (NATIONAL DESIGN SPEC. BY AF&PA) AND TPI. ALPINE CONNECTOR PLATES ARE MADE OF 20/18/16GA (W,H/S/K) ASTM A653 GRADE 40/60 (W, K/H,S) GALV. STEEL. APPLY PLATES TO EACH FACE OF TRUSS AND, UNLESS OTHERWISE LOCATED ON THIS DESIGN, POSITION PER DRAWINGS 160A-Z. ANY INSPECTION OF PLATES FOLLOWED BY (1) SHALL BE PER ANNEX A3 OF TPI1-2002 SEC.3. A SEAL ON THIS DRAWING INDICATES ACCEPTANCE OF PROFESSIONAL ENGINEERING RESPONSIBILITY SOLELY FOR THE TRUSS COMPONENT DESIGN SHOWN. THE SUITABILITY AND USE OF THIS COMPONENT FOR ANY BUILDING IS THE RESPONSIBILITY OF THE BUILDING DESIGNER PER ANSI/TPI 1 SEC. 2.

ARTHUR R. FISHER LICENSE No. 59687 STATE OF FLORIDA PROFESSIONAL ENGINEER
Oct 1 '05

TC LL	20.0 PSF	REF	R487-- 3830
TC DL	10.0 PSF	DATE	10/15/05
BC DL	10.0 PSF	DRW	HCUSR487 05288017
BC LL	0.0 PSF	HC-ENG	DF/AF
TOT.LD.	40.0 PSF	SEQN-	13248
DUR.FAC.	1.25		
SPACING	24.0"	JREF-	1SRC487_Z01

(5-434-MIKE STALVEY - EJ7)

Top chord 2x4 SP #2 Dense
Bot chord 2x4 SP #2 Dense

Deflection meets L/360 live and L/240 total load.

110 mph wind, 9.01 ft mean hgt, ASCE 7-98, CLOSED bldg, not located within 4.50 ft from roof edge, CAT II, EXP B, wind TC DL=5.0 psf, wind BC DL=5.0 psf.

Provide (2) 16d common nails(0.162"x3.5"), toe nailed at Top chord.
Provide (2) 16d common nails(0.162"x3.5"), toe nailed at Bot chord.

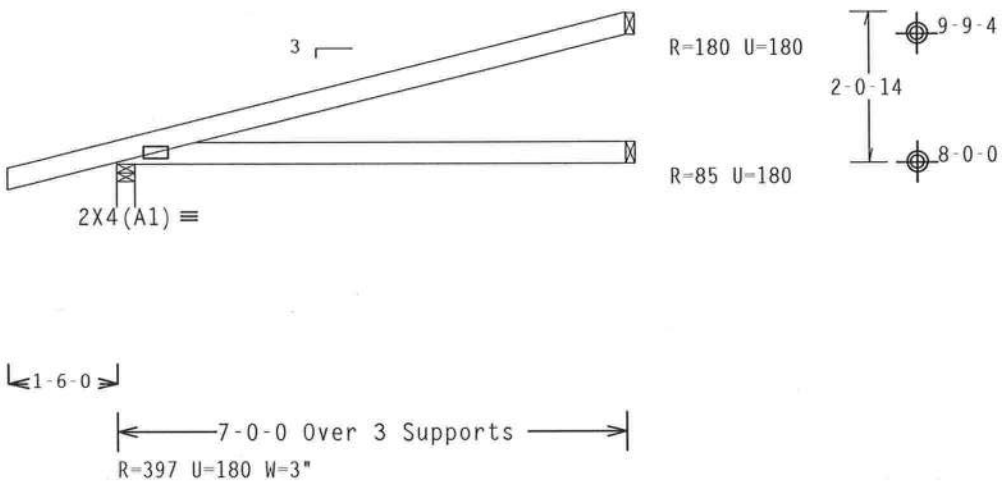

Design Crit: TPI-2002(STD)/FBC
PLT TYP. Wave — Cq/RT=1.00(1.25)/10(0) 7.04.[illegible] QTY:2 FL/-/3/-/-/R/- Scale =.375"/Ft.

ALPINE
Alpine Engineered Products, Inc.
1950 Marley Drive
Haines City, FL 33844
FL Certificate of Authorization # 567

WARNING TRUSSES REQUIRE EXTREME CARE IN FABRICATION, HANDLING, SHIPPING, INSTALLING AND BRACING. REFER TO BCSI 1-03 (BUILDING COMPONENT SAFETY INFORMATION), PUBLISHED BY TPI (TRUSS PLATE INSTITUTE, 583 D'ONOFRIO DR., SUITE 200, MADISON, WI 53719) AND WTCA (WOOD TRUSS COUNCIL OF AMERICA, 6300 ENTERPRISE LN, MADISON, WI 53719) FOR SAFETY PRACTICES PRIOR TO PERFORMING THESE FUNCTIONS. UNLESS OTHERWISE INDICATED, TOP CHORD SHALL HAVE PROPERLY ATTACHED STRUCTURAL PANELS AND BOTTOM CHORD SHALL HAVE A PROPERLY ATTACHED RIGID CEILING.

IMPORTANT FURNISH A COPY OF THIS DESIGN TO THE INSTALLATION CONTRACTOR. ALPINE ENGINEERED PRODUCTS, INC. SHALL NOT BE RESPONSIBLE FOR ANY DEVIATION FROM THIS DESIGN; ANY FAILURE TO BUILD THE TRUSS IN CONFORMANCE WITH TPI; OR FABRICATING, HANDLING, SHIPPING, INSTALLING & BRACING OF TRUSSES. DESIGN CONFORMS WITH APPLICABLE PROVISIONS OF NDS (NATIONAL DESIGN SPEC. BY AF&PA) AND TPI. ALPINE CONNECTOR PLATES ARE MADE OF 20/18/16GA (W,H/S/K) ASTM A653 GRADE 40/60 (W, K/H,S) GALV. STEEL. APPLY PLATES TO EACH FACE OF TRUSS AND, UNLESS OTHERWISE LOCATED ON THIS DESIGN, POSITION PER DRAWINGS 160A-Z. ANY INSPECTION OF PLATES FOLLOWED BY (1) SHALL BE PER ANNEX A3 OF TPI1-2002 SEC.3. A SEAL ON THIS DRAWING INDICATES ACCEPTANCE OF PROFESSIONAL ENGINEERING RESPONSIBILITY SOLELY FOR THE TRUSS COMPONENT DESIGN SHOWN. THE SUITABILITY AND USE OF THIS COMPONENT FOR ANY BUILDING IS THE RESPONSIBILITY OF THE BUILDING DESIGNER PER ANSI/TPI 1 SEC. 2.

ARTHUR R. FISHER LICENSE No. 59687 STATE OF FLORIDA PROFESSIONAL ENGINEER
Oc[illegible] 17 '05

TC LL	20.0 PSF	REF	R487-- 3831
TC DL	10.0 PSF	DATE	10/15/05
BC DL	10.0 PSF	DRW	HCUSR487 05288020
BC LL	0.0 PSF	HC-ENG	DF/AF
TOT.LD.	40.0 PSF	SEQN-	13252
DUR.FAC.	1.25		
SPACING	24.0"	JREF-	1SRC487_Z01

(5-434-MIKE STALVEY - M)

Top chord 2x4 SP #2 Dense
Bot chord 2x4 SP #2 Dense
Webs 2x4 SP #3

Deflection meets L/360 live and L/240 total load.

110 mph wind, 9.19 ft mean hgt, ASCE 7-98, CLOSED bldg, not located within 4.50 ft from roof edge, CAT II, EXP B, wind TC DL=5.0 psf, wind BC DL=5.0 psf.

Right end vertical not exposed to wind pressure.

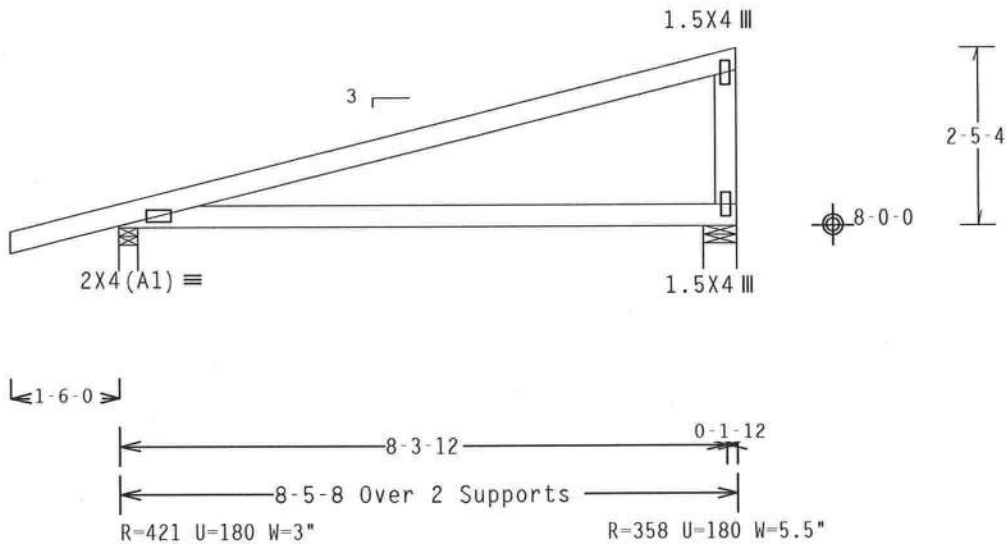

Design Crit: TPI-2002(STD)/FBC
Cq/RT=1.00(1.25)/10(0) 7.04.0 QTY:30 FL/-/3/-/-/R/-

PLT TYP. Wave

Scale =.375"/Ft.

ALPINE
Alpine Engineered Products, Inc.
1950 Marley Drive
Haines City, FL 33844
FL Certificate of Authorization # 567

WARNING TRUSSES REQUIRE EXTREME CARE IN FABRICATION, HANDLING, SHIPPING, INSTALLING AND BRACING. REFER TO BCSI 1-03 (BUILDING COMPONENT SAFETY INFORMATION), PUBLISHED BY TPI (TRUSS PLATE INSTITUTE, 583 D'ONOFRIO DR., SUITE 200, MADISON, WI 53719) AND WTCA (WOOD TRUSS COUNCIL OF AMERICA, 6300 ENTERPRISE LN, MADISON, WI 53719) FOR SAFETY PRACTICES PRIOR TO PERFORMING THESE FUNCTIONS. UNLESS OTHERWISE INDICATED, TOP CHORD SHALL HAVE PROPERLY ATTACHED STRUCTURAL PANELS AND BOTTOM CHORD SHALL HAVE A PROPERLY ATTACHED RIGID CEILING.

IMPORTANTFURNISH A COPY OF THIS DESIGN TO THE INSTALLATION CONTRACTOR. ALPINE ENGINEERED PRODUCTS, INC. SHALL NOT BE RESPONSIBLE FOR ANY DEVIATION FROM THIS DESIGN; ANY FAILURE TO BUILD THE TRUSS IN CONFORMANCE WITH TPI; OR FABRICATING, HANDLING, SHIPPING, INSTALLING & BRACING OF TRUSSES. DESIGN CONFORMS WITH APPLICABLE PROVISIONS OF NDS (NATIONAL DESIGN SPEC. BY AF&PA) AND TPI. ALPINE CONNECTOR PLATES ARE MADE OF 20/18/16GA (W,H/S/K) ASTM A653 GRADE 40/60 (W, K/H,S) GALV. STEEL. APPLY PLATES TO EACH FACE OF TRUSS AND, UNLESS OTHERWISE LOCATED ON THIS DESIGN, POSITION PER DRAWINGS 160A-Z. ANY INSPECTION OF PLATES FOLLOWED BY (1) SHALL BE PER ANNEX A3 OF TPI1-2002 SEC.3. A SEAL ON THIS DRAWING INDICATES ACCEPTANCE OF PROFESSIONAL ENGINEERING RESPONSIBILITY SOLELY FOR THE TRUSS COMPONENT DESIGN SHOWN. THE SUITABILITY AND USE OF THIS COMPONENT FOR ANY BUILDING IS THE RESPONSIBILITY OF THE BUILDING DESIGNER PER ANSI/TPI 1 SEC. 2.

ARTHUR R. FISHER
LICENSE
No.59687
STATE OF ARIZONA
PROFESSIONAL ENGINEER
Oct 1 '05

TC LL	20.0 PSF	REF R487-- 3832
TC DL	10.0 PSF	DATE 10/15/05
BC DL	10.0 PSF	DRW HCUSR487 05288022
BC LL	0.0 PSF	HC-ENG DF/AF *
TOT.LD.	40.0 PSF	SEQN- 13234
DUR.FAC.	1.25	
SPACING	24.0"	JREF- 1SRC487_Z01

(5-434-MIKE STALVEY - H7M)

Top chord 2x4 SP #2 Dense
Bot chord 2x4 SP #2 Dense
Webs 2x4 SP #3

#1 hip supports 7-0-0 jacks with no webs.

Deflection meets L/360 live and L/240 total load.

110 mph wind, 15.00 ft mean hgt, ASCE 7-98, CLOSED bldg, Located anywhere in roof, CAT II, EXP B, wind TC DL=5.0 psf, wind BC DL=5.0 psf.

Right end vertical not exposed to wind pressure.

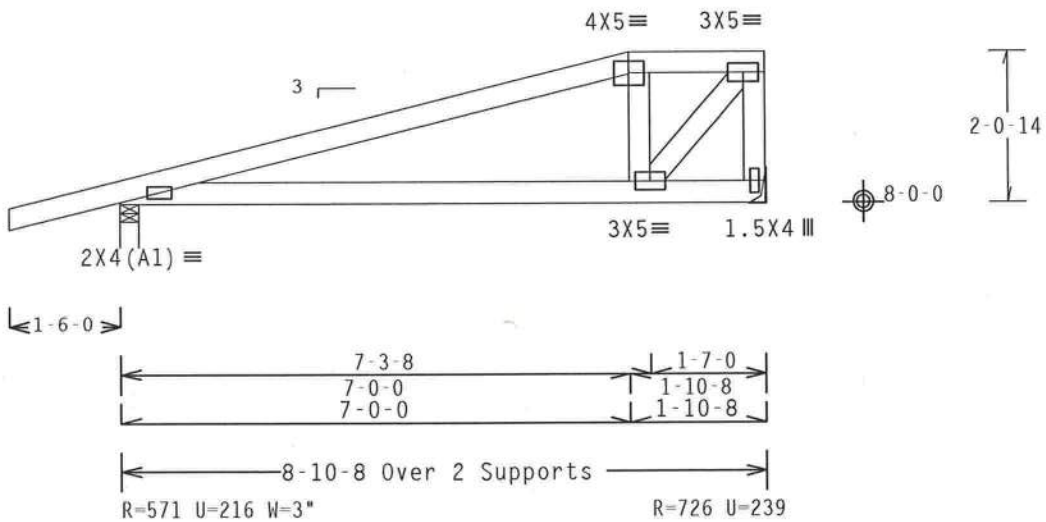

Design Crit: TPI-2002(STD)/FBC
Cq/RT=1.00(1.25)/10(0) 7.04.0 QTY:2 FL/-/3/-/-/R/- Scale =.375"/Ft.

PLT TYP. Wave

ALPINE
Alpine Engineered Products, Inc.
1950 Marley Drive
Haines City, FL 33844
FL Certificate of Authorization # 567

WARNING TRUSSES REQUIRE EXTREME CARE IN FABRICATION, HANDLING, SHIPPING, INSTALLING AND BRACING. REFER TO BCSI 1-03 (BUILDING COMPONENT SAFETY INFORMATION), PUBLISHED BY TPI (TRUSS PLATE INSTITUTE, 583 D'ONOFRIO DR., SUITE 200, MADISON, WI 53719) AND WTCA (WOOD TRUSS COUNCIL OF AMERICA, 6300 ENTERPRISE LN, MADISON, WI 53719) FOR SAFETY PRACTICES PRIOR TO PERFORMING THESE FUNCTIONS. UNLESS OTHERWISE INDICATED, TOP CHORD SHALL HAVE PROPERLY ATTACHED STRUCTURAL PANELS AND BOTTOM CHORD SHALL HAVE A PROPERLY ATTACHED RIGID CEILING.

IMPORTANT FURNISH A COPY OF THIS DESIGN TO THE INSTALLATION CONTRACTOR. ALPINE ENGINEERED PRODUCTS, INC. SHALL NOT BE RESPONSIBLE FOR ANY DEVIATION FROM THIS DESIGN; ANY FAILURE TO BUILD THE TRUSS IN CONFORMANCE WITH TPI; OR FABRICATING, HANDLING, SHIPPING, INSTALLING & BRACING OF TRUSSES. DESIGN CONFORMS WITH APPLICABLE PROVISIONS OF NDS (NATIONAL DESIGN SPEC. BY AF&PA) AND TPI. ALPINE CONNECTOR PLATES ARE MADE OF 20/18/16GA (W,H/S/K) ASTM A653 GRADE 40/60 (W, K/H,S) GALV. STEEL. APPLY PLATES TO EACH FACE OF TRUSS AND, UNLESS OTHERWISE LOCATED ON THIS DESIGN, POSITION PER DRAWINGS 160A-Z. ANY INSPECTION OF PLATES FOLLOWED BY (1) SHALL BE PER ANNEX A3 OF TPI1-2002 SEC.3. A SEAL ON THIS DRAWING INDICATES ACCEPTANCE OF PROFESSIONAL ENGINEERING RESPONSIBILITY SOLELY FOR THE TRUSS COMPONENT DESIGN SHOWN. THE SUITABILITY AND USE OF THIS COMPONENT FOR ANY BUILDING IS THE RESPONSIBILITY OF THE BUILDING DESIGNER PER ANSI/TPI 1 SEC. 2.

ARTHUR R. FISHER LICENSE No. 59687 STATE OF FLORIDA PROFESSIONAL ENGINEER
Oct 17 '05

TC LL	20.0 PSF	REF	R487-- 3833
TC DL	10.0 PSF	DATE	10/15/05
BC DL	10.0 PSF	DRW	HCUSR487 05288008
BC LL	0.0 PSF	HC-ENG	DF/AF
TOT.LD.	40.0 PSF	SEQN-	13268
DUR.FAC.	1.25		
SPACING	SEE ABOVE	JREF-	1SRC487_Z01

(5-434-MIKE STALVEY - M-1)

Top chord 2x4 SP #2 Dense
Bot chord 2x6 SP #2
Webs 2x4 SP #3

110 mph wind, 15.00 ft mean hgt, ASCE 7-98, CLOSED bldg, Located anywhere in roof, CAT II, EXP B, wind TC DL=5.0 psf, wind BC DL=5.0 psf.

Deflection meets L/360 live and L/240 total load.

SPECIAL LOADS
------(LUMBER DUR.FAC.=1.25 / PLATE DUR.FAC.=1.25)
TC - From 61 PLF at -1.50 to 61 PLF at 8.00
BC - From 4 PLF at -1.50 to 4 PLF at 0.00
BC - From 20 PLF at 0.00 to 20 PLF at 8.00
BC - 726 LB Conc. Load at 7.06

Right end vertical not exposed to wind pressure.

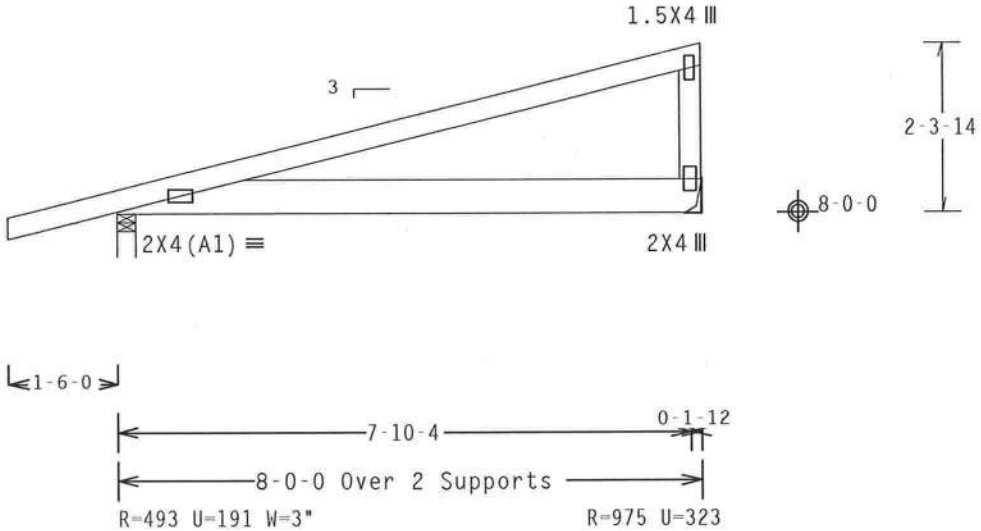

Design Crit: TPI-2002(STD)/FBC
PLT TYP. Wave Cq/RT=1.00(1.25)/10(0) 7.04.0 [illegible] QTY:1 FL/-/3/-/-/R/- Scale =.375"/Ft.

ALPINE
Alpine Engineered Products, Inc.
1950 Marley Drive
Haines City, FL 33844
FL Certificate of Authorization # 567

WARNING TRUSSES REQUIRE EXTREME CARE IN FABRICATION, HANDLING, SHIPPING, INSTALLING AND BRACING. REFER TO BCSI 1-03 (BUILDING COMPONENT SAFETY INFORMATION), PUBLISHED BY TPI (TRUSS PLATE INSTITUTE, 583 D'ONOFRIO DR., SUITE 200, MADISON, WI 53719) AND WTCA (WOOD TRUSS COUNCIL OF AMERICA, 6300 ENTERPRISE LN, MADISON, WI 53719) FOR SAFETY PRACTICES PRIOR TO PERFORMING THESE FUNCTIONS. UNLESS OTHERWISE INDICATED, TOP CHORD SHALL HAVE PROPERLY ATTACHED STRUCTURAL PANELS AND BOTTOM CHORD SHALL HAVE A PROPERLY ATTACHED RIGID CEILING.

IMPORTANT FURNISH A COPY OF THIS DESIGN TO THE INSTALLATION CONTRACTOR. ALPINE ENGINEERED PRODUCTS, INC. SHALL NOT BE RESPONSIBLE FOR ANY DEVIATION FROM THIS DESIGN; ANY FAILURE TO BUILD THE TRUSS IN CONFORMANCE WITH TPI; OR FABRICATING, HANDLING, SHIPPING, INSTALLING & BRACING OF TRUSSES. DESIGN CONFORMS WITH APPLICABLE PROVISIONS OF NDS (NATIONAL DESIGN SPEC. BY AF&PA) AND TPI. ALPINE CONNECTOR PLATES ARE MADE OF 20/18/16GA (W,H/S/K) ASTM A653 GRADE 40/60 (W, K/H,S) GALV. STEEL. APPLY PLATES TO EACH FACE OF TRUSS AND, UNLESS OTHERWISE LOCATED ON THIS DESIGN, POSITION PER DRAWINGS 160A-Z. ANY INSPECTION OF PLATES FOLLOWED BY (1) SHALL BE PER ANNEX A3 OF TPI1-2002 SEC.3. A SEAL ON THIS DRAWING INDICATES ACCEPTANCE OF PROFESSIONAL ENGINEERING RESPONSIBILITY SOLELY FOR THE TRUSS COMPONENT DESIGN SHOWN. THE SUITABILITY AND USE OF THIS COMPONENT FOR ANY BUILDING IS THE RESPONSIBILITY OF THE BUILDING DESIGNER PER ANSI/TPI 1 SEC. 2.

ARTHUR R. FISHER
LICENSE
No. 59687
STATE OF FLORIDA
PROFESSIONAL ENGINEER
Oct 17 '05

TC LL	20.0 PSF	REF	R487-- 3834
TC DL	10.0 PSF	DATE	10/15/05
BC DL	10.0 PSF	DRW	HCUSR487 05288005
BC LL	0.0 PSF	HC-ENG	DF/AF
TOT.LD.	40.0 PSF	SEQN-	13300
DUR.FAC.	1.25		
SPACING	24.0"	JREF-	1SRC487_Z01

(5-434-MIKE STALVEY - M-2)

Top chord 2x4 SP #2 Dense
Bot chord 2x6 SP #2
Webs 2x4 SP #3

110 mph wind, 15.00 ft mean hgt, ASCE 7-98, CLOSED bldg, Located anywhere in roof, CAT II, EXP B, wind TC DL=5.0 psf, wind BC DL=5.0 psf.

Deflection meets L/360 live and L/240 total load.

SPECIAL LOADS
------(LUMBER DUR.FAC.=1.25 / PLATE DUR.FAC.=1.25)
TC - From 61 PLF at -1.50 to 61 PLF at 8.00
BC - From 4 PLF at -1.50 to 4 PLF at 0.00
BC - From 20 PLF at 0.00 to 20 PLF at 8.00
BC - 726 LB Conc. Load at 7.06

Right end vertical not exposed to wind pressure.

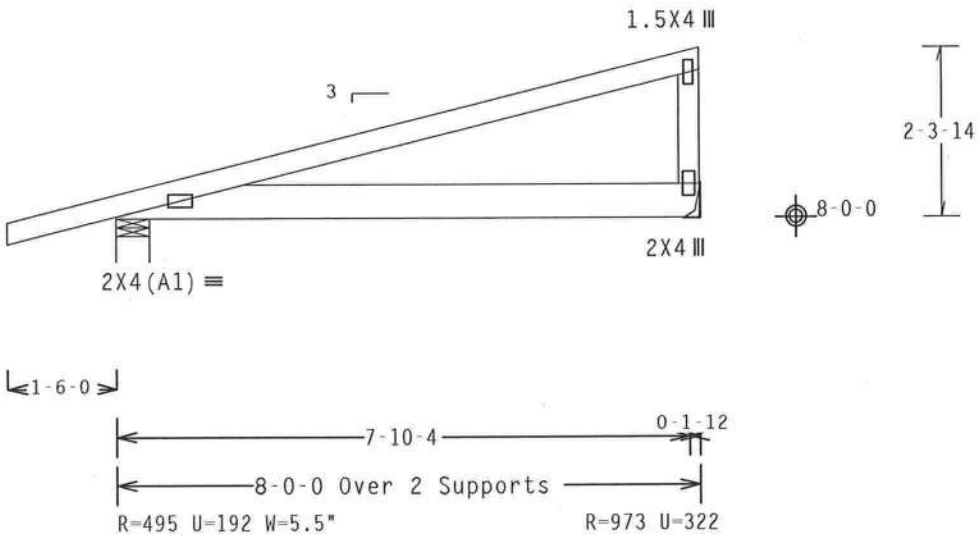

Design Crit: TPI-2002(STD)/FBC
Cq/RT=1.00(1.25)/10(0) 7.04.08 TY:1 FL/-/3/-/-/R/-

PLT TYP. Wave

Scale =.375"/Ft.

ALPINE
Alpine Engineered Products, Inc.
1950 Marley Drive
Haines City, FL 33844
FL Certificate of Authorization # 567

WARNING TRUSSES REQUIRE EXTREME CARE IN FABRICATION, HANDLING, SHIPPING, INSTALLING AND BRACING. REFER TO BCSI 1-03 (BUILDING COMPONENT SAFETY INFORMATION), PUBLISHED BY TPI (TRUSS PLATE INSTITUTE, 583 D'ONOFRIO DR., SUITE 200, MADISON, WI 53719) AND WTCA (WOOD TRUSS COUNCIL OF AMERICA, 6300 ENTERPRISE LN, MADISON, WI 53719) FOR SAFETY PRACTICES PRIOR TO PERFORMING THESE FUNCTIONS. UNLESS OTHERWISE INDICATED, TOP CHORD SHALL HAVE PROPERLY ATTACHED STRUCTURAL PANELS AND BOTTOM CHORD SHALL HAVE A PROPERLY ATTACHED RIGID CEILING.

IMPORTANTFURNISH A COPY OF THIS DESIGN TO THE INSTALLATION CONTRACTOR. ALPINE ENGINEERED PRODUCTS, INC. SHALL NOT BE RESPONSIBLE FOR ANY DEVIATION FROM THIS DESIGN; ANY FAILURE TO BUILD THE TRUSS IN CONFORMANCE WITH TPI; OR FABRICATING, HANDLING, SHIPPING, INSTALLING & BRACING OF TRUSSES. DESIGN CONFORMS WITH APPLICABLE PROVISIONS OF NDS (NATIONAL DESIGN SPEC, BY AF&PA) AND TPI. ALPINE CONNECTOR PLATES ARE MADE OF 20/18/16GA (W,H/S/K) ASTM A653 GRADE 40/60 (W, K/H,S) GALV. STEEL. APPLY PLATES TO EACH FACE OF TRUSS AND, UNLESS OTHERWISE LOCATED ON THIS DESIGN, POSITION PER DRAWINGS 160A-Z. ANY INSPECTION OF PLATES FOLLOWED BY (1) SHALL BE PER ANNEX A3 OF TPI1-2002 SEC.3. A SEAL ON THIS DRAWING INDICATES ACCEPTANCE OF PROFESSIONAL ENGINEERING RESPONSIBILITY SOLELY FOR THE TRUSS COMPONENT DESIGN SHOWN. THE SUITABILITY AND USE OF THIS COMPONENT FOR ANY BUILDING IS THE RESPONSIBILITY OF THE BUILDING DESIGNER PER ANSI/TPI 1 SEC. 2.

ARTHUR R. FISHER LICENSE No. 59687 STATE OF FLORIDA PROFESSIONAL ENGINEER
Oct 17 '05

TC LL	20.0 PSF	REF R487-- 3835
TC DL	10.0 PSF	DATE 10/15/05
BC DL	10.0 PSF	DRW HCUSR487 05288006
BC LL	0.0 PSF	HC-ENG DF/AF
TOT.LD.	40.0 PSF	SEQN- 13479
DUR.FAC.	1.25	
SPACING	24.0"	JREF- 1SRC487_Z01

(5-434-MIKE STALVEY - M1)

Top chord 2x4 SP #2 Dense
Bot chord 2x4 SP #2 Dense
Webs 2x4 SP #3

Deflection meets L/360 live and L/240 total load.

110 mph wind, 9.13 ft mean hgt, ASCE 7-98, CLOSED bldg, Located anywhere in roof, CAT II, EXP B, wind TC DL=5.0 psf, wind BC DL=5.0 psf.

Right end vertical not exposed to wind pressure.

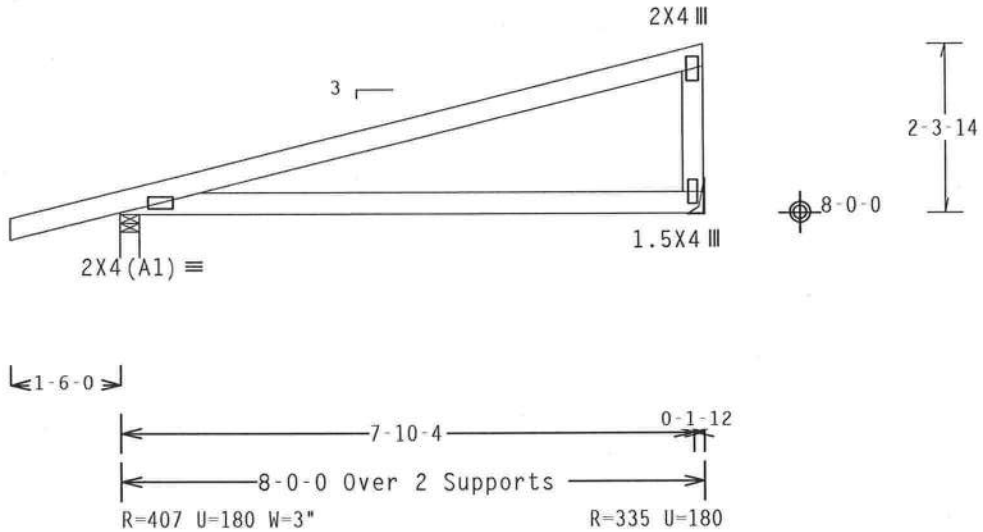

Design Crit: TPI-2002(STD)/FBC
Cq/RT=1.00(1.25)/10(0) 7.04.08 QTY:6 FL/-/3/-/-/R/- Scale =.375"/Ft.

PLT TYP. Wave

ALPINE
Alpine Engineered Products, Inc.
1950 Marley Drive
Haines City, FL 33844
FL Certificate of Authorization # 567

WARNING TRUSSES REQUIRE EXTREME CARE IN FABRICATION, HANDLING, SHIPPING, INSTALLING AND BRACING. REFER TO BCSI 1-03 (BUILDING COMPONENT SAFETY INFORMATION), PUBLISHED BY TPI (TRUSS PLATE INSTITUTE, 583 D'ONOFRIO DR., SUITE 200, MADISON, WI 53719) AND WTCA (WOOD TRUSS COUNCIL OF AMERICA, 6300 ENTERPRISE LN, MADISON, WI 53719) FOR SAFETY PRACTICES PRIOR TO PERFORMING THESE FUNCTIONS. UNLESS OTHERWISE INDICATED, TOP CHORD SHALL HAVE PROPERLY ATTACHED STRUCTURAL PANELS AND BOTTOM CHORD SHALL HAVE A PROPERLY ATTACHED RIGID CEILING.

IMPORTANT FURNISH A COPY OF THIS DESIGN TO THE INSTALLATION CONTRACTOR. ALPINE ENGINEERED PRODUCTS, INC. SHALL NOT BE RESPONSIBLE FOR ANY DEVIATION FROM THIS DESIGN; ANY FAILURE TO BUILD THE TRUSS IN CONFORMANCE WITH TPI; OR FABRICATING, HANDLING, SHIPPING, INSTALLING & BRACING OF TRUSSES. DESIGN CONFORMS WITH APPLICABLE PROVISIONS OF NDS (NATIONAL DESIGN SPEC. BY AF&PA) AND TPI. ALPINE CONNECTOR PLATES ARE MADE OF 20/18/16GA (W,H/S/K) ASTM A653 GRADE 40/60 (W, K/H,S) GALV. STEEL. APPLY PLATES TO EACH FACE OF TRUSS AND, UNLESS OTHERWISE LOCATED ON THIS DESIGN, POSITION PER DRAWINGS 160A-Z. ANY INSPECTION OF PLATES FOLLOWED BY (1) SHALL BE PER ANNEX A3 OF TPI1-2002 SEC.3. A SEAL ON THIS DRAWING INDICATES ACCEPTANCE OF PROFESSIONAL ENGINEERING RESPONSIBILITY SOLELY FOR THE TRUSS COMPONENT DESIGN SHOWN. THE SUITABILITY AND USE OF THIS COMPONENT FOR ANY BUILDING IS THE RESPONSIBILITY OF THE BUILDING DESIGNER PER ANSI/TPI 1 SEC. 2.

ARTHUR R. FISHER LICENSE No. 59687 STATE OF FLORIDA PROFESSIONAL ENGINEER
Oct 1 '05

TC LL	20.0 PSF	REF	R487-- 3836
TC DL	10.0 PSF	DATE	10/15/05
BC DL	10.0 PSF	DRW	HCUSR487 05288010
BC LL	0.0 PSF	HC-ENG	DF/AF *
TOT.LD.	40.0 PSF	SEQN-	13475
DUR.FAC.	1.25		
SPACING	24.0"	JREF-	1SRC487_Z01

Top chord 2x4 SP #2 Dense
Bot chord 2x4 SP #2 Dense
Webs 2x4 SP #3

SPECIAL LOADS
------(LUMBER DUR.FAC.=1.25 / PLATE DUR.FAC.=1.25)

TC - From	83 PLF	at -1.50	to	83 PLF	at 8.00
BC - From	4 PLF	at -1.50	to	4 PLF	at 0.00
BC - From	20 PLF	at 0.00	to	20 PLF	at 8.00

Deflection meets L/360 live and L/240 total load.

THE BUILDING DESIGNER IS RESPONSIBLE FOR THE DESIGN OF THE ROOF AND CEILING DIAPHRAGMS, GABLE END SHEAR WALLS, AND SUPPORTING SHEAR WALLS. SHEAR WALLS MUST PROVIDE CONTINUOUS LATERAL RESTRAINT TO THE GABLE END. ALL CONNECTIONS TO BE DESIGNED BY THE BUILDING DESIGNER.

(**) 1 plate(s) require special positioning. Refer to scaled plate plot details for special positioning requirements.

110 mph wind, 8.98 ft mean hgt, ASCE 7-98, CLOSED bldg, Located anywhere in roof, CAT II, EXP B, wind TC DL=5.0 psf, wind BC DL=5.0 psf.

Right end vertical not exposed to wind pressure.

See DWGS A11015EC1103 & GBLLETIN0405 for more requirements.

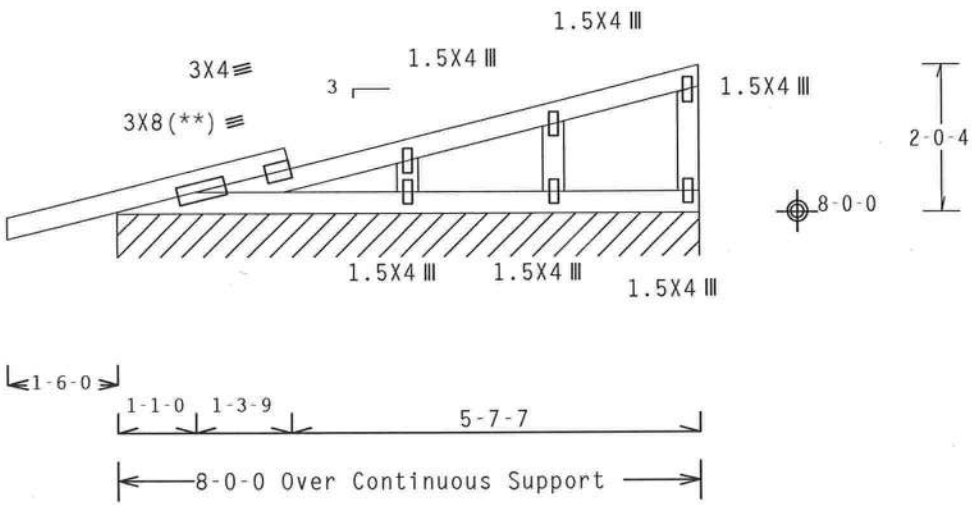

R=105 PLF U=36 PLF W=8-0-0

Design Crit: TPI-2002(STD)/FBC
Cq/RT=1.00(1.25)/10(0) 7.04.0 QTY:2 FL/-/3/-/-/R/-

PLT TYP. Wave

Scale =.375"/Ft.

ALPINE
Alpine Engineered Products, Inc.
1950 Marley Drive
Haines City, FL 33844
FL Certificate of Authorization # 567

WARNING TRUSSES REQUIRE EXTREME CARE IN FABRICATION, HANDLING, SHIPPING, INSTALLING AND BRACING. REFER TO BCSI 1-03 (BUILDING COMPONENT SAFETY INFORMATION), PUBLISHED BY TPI (TRUSS PLATE INSTITUTE, 583 D'ONOFRIO DR., SUITE 200, MADISON, WI 53719) AND WTCA (WOOD TRUSS COUNCIL OF AMERICA, 6300 ENTERPRISE LN, MADISON, WI 53719) FOR SAFETY PRACTICES PRIOR TO PERFORMING THESE FUNCTIONS. UNLESS OTHERWISE INDICATED, TOP CHORD SHALL HAVE PROPERLY ATTACHED STRUCTURAL PANELS AND BOTTOM CHORD SHALL HAVE A PROPERLY ATTACHED RIGID CEILING.

IMPORTANT FURNISH A COPY OF THIS DESIGN TO THE INSTALLATION CONTRACTOR. ALPINE ENGINEERED PRODUCTS, INC. SHALL NOT BE RESPONSIBLE FOR ANY DEVIATION FROM THIS DESIGN; ANY FAILURE TO BUILD THE TRUSS IN CONFORMANCE WITH TPI; OR FABRICATING, HANDLING, SHIPPING, INSTALLING & BRACING OF TRUSSES. DESIGN CONFORMS WITH APPLICABLE PROVISIONS OF NDS (NATIONAL DESIGN SPEC. BY AF&PA) AND TPI. ALPINE CONNECTOR PLATES ARE MADE OF 20/18/16GA (W.H/S/K) ASTM A653 GRADE 40/60 (W. K/H.S) GALV. STEEL. APPLY PLATES TO EACH FACE OF TRUSS AND, UNLESS OTHERWISE LOCATED ON THIS DESIGN, POSITION PER DRAWINGS 160A-Z. ANY INSPECTION OF PLATES FOLLOWED BY (1) SHALL BE PER ANNEX A3 OF TPI1-2002 SEC.3. A SEAL ON THIS DRAWING INDICATES ACCEPTANCE OF PROFESSIONAL ENGINEERING RESPONSIBILITY SOLELY FOR THE TRUSS COMPONENT DESIGN SHOWN. THE SUITABILITY AND USE OF THIS COMPONENT FOR ANY BUILDING IS THE RESPONSIBILITY OF THE BUILDING DESIGNER PER ANSI/TPI 1 SEC. 2.

ARTHUR R. FISHER LICENSE No. 59687 STATE OF FLORIDA PROFESSIONAL ENGINEER
Oct 17 '05

TC LL	20.0 PSF	REF	R487-- 3837
TC DL	10.0 PSF	DATE	10/15/05
BC DL	10.0 PSF	DRW	HCUSR487 05288004
BC LL	0.0 PSF	HC-ENG	DF/AF
TOT.LD.	40.0 PSF	SEQN-	13283
DUR.FAC.	1.25		
SPACING	SEE ABOVE	JREF-	1SRC487_Z01

(5-434-MIKE STALVEY - AVP)

Top chord 2x4 SP #2 Dense
Bot chord 2x4 SP #2 Dense
Webs 2x4 SP #3

Deflection meets L/360 live and L/240 total load.

Refer to DWG PIGBACKA1103 or PIGBACKB1103 for piggyback details.
PORTION OF TRUSS UNDER PIGGYBACK IS TO BE BRACED @ 24" OC,
UNLESS OTHERWISE SPECIFIED.

110 mph wind, 20.01 ft mean hgt, ASCE 7-98, CLOSED bldg, not located within 4.50 ft from roof edge, CAT II, EXP B, wind TC DL=5.0 psf, wind BC DL=5.0 psf.

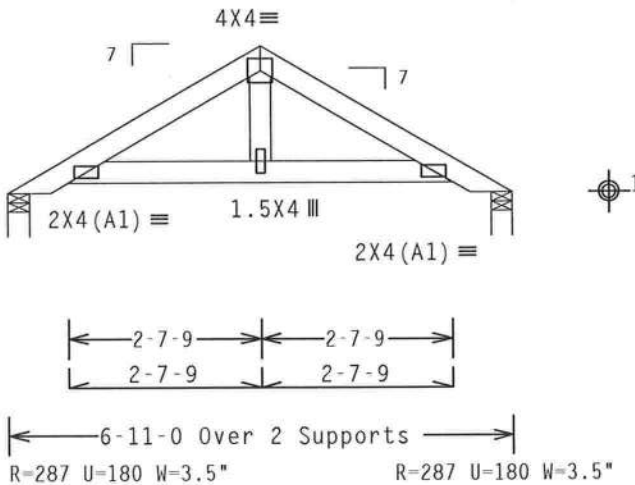

19-0-0

1-10-7

Design Crit: TPI-2002(STD)/FBC
Cq/RT=1.00(1.25)/10(0) 7.04.0[illegible] TY:10 FL/-/3/-/-/R/-

PLT TYP. Wave

Scale =.375"/Ft.

ALPINE
Alpine Engineered Products, Inc.
1950 Marley Drive
Haines City, FL 33844
FL Certificate of Authorization # 567

WARNING TRUSSES REQUIRE EXTREME CARE IN FABRICATION, HANDLING, SHIPPING, INSTALLING AND BRACING. REFER TO BCSI 1-03 (BUILDING COMPONENT SAFETY INFORMATION), PUBLISHED BY TPI (TRUSS PLATE INSTITUTE, 583 D'ONOFRIO DR., SUITE 200, MADISON, WI 53719) AND WTCA (WOOD TRUSS COUNCIL OF AMERICA, 6300 ENTERPRISE LN, MADISON, WI 53719) FOR SAFETY PRACTICES PRIOR TO PERFORMING THESE FUNCTIONS. UNLESS OTHERWISE INDICATED, TOP CHORD SHALL HAVE PROPERLY ATTACHED STRUCTURAL PANELS AND BOTTOM CHORD SHALL HAVE A PROPERLY ATTACHED RIGID CEILING.

IMPORTANT FURNISH A COPY OF THIS DESIGN TO THE INSTALLATION CONTRACTOR. ALPINE ENGINEERED PRODUCTS, INC. SHALL NOT BE RESPONSIBLE FOR ANY DEVIATION FROM THIS DESIGN; ANY FAILURE TO BUILD THE TRUSS IN CONFORMANCE WITH TPI; OR FABRICATING, HANDLING, SHIPPING, INSTALLING & BRACING OF TRUSSES. DESIGN CONFORMS WITH APPLICABLE PROVISIONS OF NDS (NATIONAL DESIGN SPEC. BY AF&PA) AND TPI. ALPINE CONNECTOR PLATES ARE MADE OF 20/18/16GA (W,H/S/K) ASTM A653 GRADE 40/60 (W, K/H,S) GALV. STEEL. APPLY PLATES TO EACH FACE OF TRUSS AND, UNLESS OTHERWISE LOCATED ON THIS DESIGN, POSITION PER DRAWINGS 160A-Z. ANY INSPECTION OF PLATES FOLLOWED BY (1) SHALL BE PER ANNEX A3 OF TPI1-2002 SEC.3. A SEAL ON THIS DRAWING INDICATES ACCEPTANCE OF PROFESSIONAL ENGINEERING RESPONSIBILITY SOLELY FOR THE TRUSS COMPONENT DESIGN SHOWN. THE SUITABILITY AND USE OF THIS COMPONENT FOR ANY BUILDING IS THE RESPONSIBILITY OF THE BUILDING DESIGNER PER ANSI/TPI 1 SEC. 2.

ARTHUR R. FISHER
LICENSE
No.59687
STATE OF FLORIDA
PROFESSIONAL ENGINEER

Oct 17 '05

TC LL	20.0 PSF	REF R487-- 3838
TC DL	10.0 PSF	DATE 10/15/05
BC DL	10.0 PSF	DRW HCUSR487 05288023
BC LL	0.0 PSF	HC-ENG DF/AF
TOT.LD.	40.0 PSF	SEQN- 13324
DUR.FAC.	1.25	
SPACING	24.0"	JREF- 1SRC487_Z01

(5-434-MIKE STALVEY - AVSP)

Top chord 2x4 SP #2 Dense
Bot chord 2x4 SP #2 Dense
Webs 2x4 SP #3

Deflection meets L/360 live and L/240 total load.

Refer to DWG PIGBACKA1103 or PIGBACKB1103 for piggyback details.
PORTION OF TRUSS UNDER PIGGYBACK IS TO BE BRACED @ 24" OC,
UNLESS OTHERWISE SPECIFIED.

110 mph wind, 19.97 ft mean hgt, ASCE 7-98, CLOSED bldg, Located anywhere in roof, CAT II, EXP B, wind TC DL=5.0 psf, wind BC DL=5.0 psf.

Design Crit: TPI-2002(STD)/FBC
Cq/RT=1.00(1.25)/10(0) 7.04.0 TY:4 FL/-/3/-/-/R/-

PLT TYP. Wave

Scale =.375"/Ft.

ALPINE
Alpine Engineered Products, Inc.
1950 Marley Drive
Haines City, FL 33844
FL Certificate of Authorization # 567

WARNING TRUSSES REQUIRE EXTREME CARE IN FABRICATION, HANDLING, SHIPPING, INSTALLING AND BRACING. REFER TO BCSI 1-03 (BUILDING COMPONENT SAFETY INFORMATION), PUBLISHED BY TPI (TRUSS PLATE INSTITUTE, 583 D'ONOFRIO DR., SUITE 200, MADISON, WI 53719) AND WTCA (WOOD TRUSS COUNCIL OF AMERICA, 6300 ENTERPRISE LN, MADISON, WI 53719) FOR SAFETY PRACTICES PRIOR TO PERFORMING THESE FUNCTIONS. UNLESS OTHERWISE INDICATED, TOP CHORD SHALL HAVE PROPERLY ATTACHED STRUCTURAL PANELS AND BOTTOM CHORD SHALL HAVE A PROPERLY ATTACHED RIGID CEILING.

IMPORTANTFURNISH A COPY OF THIS DESIGN TO THE INSTALLATION CONTRACTOR. ALPINE ENGINEERED PRODUCTS, INC. SHALL NOT BE RESPONSIBLE FOR ANY DEVIATION FROM THIS DESIGN; ANY FAILURE TO BUILD THE TRUSS IN CONFORMANCE WITH TPI; OR FABRICATING, HANDLING, SHIPPING, INSTALLING & BRACING OF TRUSSES. DESIGN CONFORMS WITH APPLICABLE PROVISIONS OF NDS (NATIONAL DESIGN SPEC. BY AF&PA) AND TPI. ALPINE CONNECTOR PLATES ARE MADE OF 20/18/16GA (W,H/S/K) ASTM A653 GRADE 40/60 (W, K/H,S) GALV. STEEL. APPLY PLATES TO EACH FACE OF TRUSS AND, UNLESS OTHERWISE LOCATED ON THIS DESIGN, POSITION PER DRAWINGS 160A-Z. ANY INSPECTION OF PLATES FOLLOWED BY (1) SHALL BE PER ANNEX A3 OF TPI1-2002 SEC.3. A SEAL ON THIS DRAWING INDICATES ACCEPTANCE OF PROFESSIONAL ENGINEERING RESPONSIBILITY SOLELY FOR THE TRUSS COMPONENT DESIGN SHOWN. THE SUITABILITY AND USE OF THIS COMPONENT FOR ANY BUILDING IS THE RESPONSIBILITY OF THE BUILDING DESIGNER PER ANSI/TPI 1 SEC. 2.

ARTHUR R. FISHER LICENSE No.59687 STATE OF FLORIDA PROFESSIONAL ENGINEER
Oct 17 '05

TC LL	20.0 PSF	REF	R487-- 3839
TC DL	10.0 PSF	DATE	10/15/05
BC DL	10.0 PSF	DRW	HCUSR487 05288024
BC LL	0.0 PSF	HC-ENG	DF/AF
TOT.LD.	40.0 PSF	SEQN-	13350
DUR.FAC.	1.25		
SPACING	24.0"	JREF-	1SRC487_Z01

(5-434-MIKE STALVEY - AP)

Top chord 2x4 SP #2 Dense
Bot chord 2x4 SP #2 Dense
Webs 2x4 SP #3

Deflection meets L/360 live and L/240 total load.

Refer to DWG PIGBACKA1103 or PIGBACKB1103 for piggyback details.
PORTION OF TRUSS UNDER PIGGYBACK IS TO BE BRACED @ 24" OC,
UNLESS OTHERWISE SPECIFIED.

110 mph wind, 19.76 ft mean hgt, ASCE 7-98, CLOSED bldg, Located anywhere in roof, CAT II, EXP B, wind TC DL=5.0 psf, wind BC DL=5.0 psf.

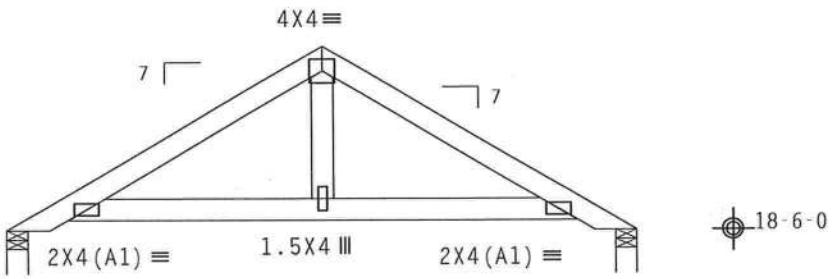

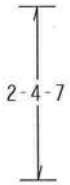

Design Crit: TPI-2002(STD)/FBC
Cq/RT=1.00(1.25)/10(0) 7.04.0 TY:19 FL/-/3/-/-/R/-

PLT TYP. Wave

Scale =.375"/Ft.

ALPINE
Alpine Engineered Products, Inc.
1950 Marley Drive
Haines City, FL 33844
FL Certificate of Authorization # 567

WARNING TRUSSES REQUIRE EXTREME CARE IN FABRICATION, HANDLING, SHIPPING, INSTALLING AND BRACING. REFER TO BCSI 1-03 (BUILDING COMPONENT SAFETY INFORMATION), PUBLISHED BY TPI (TRUSS PLATE INSTITUTE, 583 D'ONOFRIO DR., SUITE 200, MADISON, WI 53719) AND WTCA (WOOD TRUSS COUNCIL OF AMERICA, 6300 ENTERPRISE LN, MADISON, WI 53719) FOR SAFETY PRACTICES PRIOR TO PERFORMING THESE FUNCTIONS. UNLESS OTHERWISE INDICATED, TOP CHORD SHALL HAVE PROPERLY ATTACHED STRUCTURAL PANELS AND BOTTOM CHORD SHALL HAVE A PROPERLY ATTACHED RIGID CEILING.

IMPORTANT FURNISH A COPY OF THIS DESIGN TO THE INSTALLATION CONTRACTOR. ALPINE ENGINEERED PRODUCTS, INC. SHALL NOT BE RESPONSIBLE FOR ANY DEVIATION FROM THIS DESIGN; ANY FAILURE TO BUILD THE TRUSS IN CONFORMANCE WITH TPI; OR FABRICATING, HANDLING, SHIPPING, INSTALLING & BRACING OF TRUSSES. DESIGN CONFORMS WITH APPLICABLE PROVISIONS OF NDS (NATIONAL DESIGN SPEC, BY AF&PA) AND TPI. ALPINE CONNECTOR PLATES ARE MADE OF 20/18/16GA (W,H/S/K) ASTM A653 GRADE 40/60 (W, K/H,S) GALV. STEEL. APPLY PLATES TO EACH FACE OF TRUSS AND, UNLESS OTHERWISE LOCATED ON THIS DESIGN, POSITION PER DRAWINGS 160A-Z. ANY INSPECTION OF PLATES FOLLOWED BY (1) SHALL BE PER ANNEX A3 OF TPI1-2002 SEC.3. A SEAL ON THIS DRAWING INDICATES ACCEPTANCE OF PROFESSIONAL ENGINEERING RESPONSIBILITY SOLELY FOR THE TRUSS COMPONENT DESIGN SHOWN. THE SUITABILITY AND USE OF THIS COMPONENT FOR ANY BUILDING IS THE RESPONSIBILITY OF THE BUILDING DESIGNER PER ANSI/TPI 1 SEC. 2.

ARTHUR R. FISHER
LICENSE
No. 59687
STATE OF FLORIDA
PROFESSIONAL ENGINEER
Oct 17 '05

TC LL	20.0 PSF	REF	R487-- 3840
TC DL	10.0 PSF	DATE	10/15/05
BC DL	10.0 PSF	DRW	HCUSR487 05288025
BC LL	0.0 PSF	HC-ENG	DF/AF
TOT.LD.	40.0 PSF	SEQN-	13470
DUR.FAC.	1.25		
SPACING	24.0"	JREF-	1SRC487_Z01

CLB WEB BRACE SUBSTITUTION

THIS DETAIL IS TO BE USED WHEN CONTINUOUS LATERAL BRACING (CLB) IS SPECIFIED ON AN ALPINE TRUSS DESIGN BUT AN ALTERNATIVE WEB BRACING METHOD IS DESIRED.

NOTES:

THIS DETAIL IS ONLY APPLICABLE FOR CHANGING THE SPECIFIED CLB SHOWN ON SINGLE PLY SEALED DESIGNS TO T-BRACING OR SCAB BRACING.

ALTERNATIVE BRACING SPECIFIED IN CHART BELOW MAY BE CONSERVATIVE. FOR MINIMUM ALTERNATIVE BRACING, RE-RUN DESIGN WITH APPROPRIATE BRACING.

WEB MEMBER SIZE	SPECIFIED CLB BRACING	ALTERNATIVE BRACING T OR L-BRACE	ALTERNATIVE BRACING SCAB BRACE
2X3 OR 2X4	1 ROW	2X4	1-2X4
2X3 OR 2X4	2 ROWS	2X6	2-2X4
2X6	1 ROW	2X4	1-2X6
2X6	2 ROWS	2X6	2-2X4(*)
2X8	1 ROW	2X6	1-2X8
2X8	2 ROWS	2X6	2-2X6(*)

T-BRACE, L-BRACE AND SCAB BRACE TO BE SAME SPECIES AND GRADE OR BETTER THAN WEB MEMBER UNLESS SPECIFIED OTHERWISE ON ENGINEER'S SEALED DESIGN.

(*) CENTER SCAB ON WIDE FACE OF WEB. APPLY (1) SCAB TO EACH FACE OF WEB.

T-BRACING OR L-BRACING:

APPLY TO EITHER SIDE OF WEB NARROW FACE

ATTACH WITH 16d NAILS AT 6" O.C.

BRACE IS A MINIMUM 80% OF WEB MEMBER LENGTH

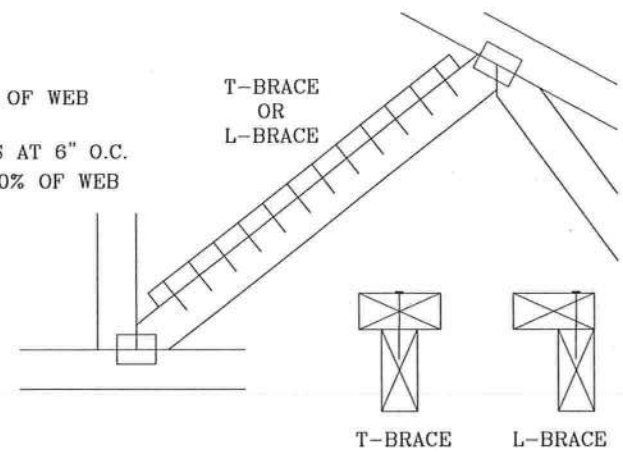

SCAB BRACING:

APPLY SCAB(S) TO WIDE FACE OF WEB. NO MORE THAN (1) SCAB PER FACE.

ATTACH WITH 10d OR .128"x3" GUN NAILS AT 6" O.C. BRACE IS A MINIMUM 80% OF WEB MEMBER LENGTH

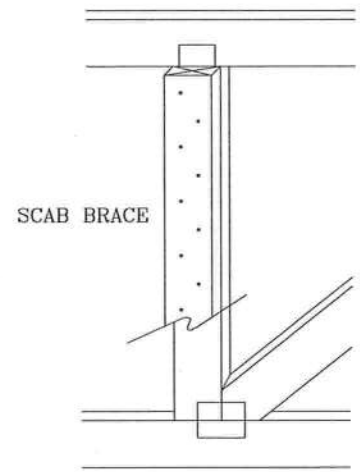

THIS DRAWING REPLACES DRAWING 579,640

ALPINE

ALPINE ENGINEERED PRODUCTS, INC.
POMPANO BEACH, FLORIDA

ARTHUR R. FISHER
LICENSE
No. 59687
STATE OF FLORIDA
PROFESSIONAL ENGINEER

Oct 17 03

TC LL	PSF	REF CLB SUBST.
TC DL	PSF	DATE 11/26/03
BC DL	PSF	DRWG BRCLBSUB1103
BC LL	PSF	-ENG MLH/KAR
TOT. LD.	PSF	
DUR. FAC.		
SPACING		

CERTIFICATE OF

OCCUPANCY

COLUMBIA COUNTY, FLORIDA

Department of Building and Zoning Inspection

This Certificate of Occupancy is issued to the below named permit holder for the building and premises at the below named location, and certifies that the work has been completed in accordance with the Columbia County Building Code.

Parcel Number 09-4S-16-02820-009

Building permit No. 000023782

Use Classification SFD,UTILITY

Fire: 0.00

Permit Holder OWNER BUILDER

Waste: 0.00

Owner of Building MIKE & ABBY STALVEY

Total: 0.00

Location: 942 SW MOUNT CARMEL AVENUE

Date: 11/16/2006

Kerney Sicas By CM

Building Inspector

POST IN A CONSPICUOUS PLACE
(Business Places Only)