RE: 6243113
2508-CR-2 Car

MiTek, Inc.
16023 Swingley Ridge Rd.
Chesterfield, MO 63017
314.434.1200

Site Information:

Customer: Adams Homes-Gainesville
Project Name: 6243113
Lot/Block: 096
Model: 2508-CR-2 Car
Address: 715 SW Rosemary Dr
Subdivision: The Preserve at Laurel Lake
City: Lake City
State: fl

General Truss Engineering Criteria & Design Loads (Individual Truss Design Drawings Show Special Loading Conditions):

Design Code: FBC2023/TPI2014
Design Program: MiTek 20/20 8.7
Wind Code: ASCE 7-22
Wind Speed: 130 mph
Roof Load: 40.0 psf
Floor Load: N/A psf

This package includes 41 individual, dated Truss Design Drawings and 0 Additional Drawings.
With my seal affixed to this sheet, I hereby certify that I am the Truss Design Engineer and this index sheet conforms to 61G15-31.003, section 5 of the Florida Board of Professional Engineers Rules.

No.	Seal#	Truss Name	Date	No.	Seal#	Truss Name	Date
1	T34534201	A01	7/25/2024	21	T34534221	B01	7/25/2024
2	T34534202	A02	7/25/2024	22	T34534222	B01X	7/25/2024
3	T34534203	A03	7/25/2024	23	T34534223	B02	7/25/2024
4	T34534204	A04	7/25/2024	24	T34534224	C1	7/25/2024
5	T34534205	A05	7/25/2024	25	T34534225	C3	7/25/2024
6	T34534206	A06	7/25/2024	26	T34534226	C5	7/25/2024
7	T34534207	A07	7/25/2024	27	T34534227	E01	7/25/2024
8	T34534208	A08	7/25/2024	28	T34534228	E01X	7/25/2024
9	T34534209	A09	7/25/2024	29	T34534229	E02	7/25/2024
10	T34534210	A10	7/25/2024	30	T34534230	E02X	7/25/2024
11	T34534211	A11	7/25/2024	31	T34534231	E7	7/25/2024
12	T34534212	A11A	7/25/2024	32	T34534232	E7B	7/25/2024
13	T34534213	A12	7/25/2024	33	T34534233	E7V	7/25/2024
14	T34534214	A13	7/25/2024	34	T34534234	E7VA	7/25/2024
15	T34534215	A14	7/25/2024	35	T34534235	E7VB	7/25/2024
16	T34534216	A15	7/25/2024	36	T34534236	E7VC	7/25/2024
17	T34534217	A16	7/25/2024	37	T34534237	H7	7/25/2024
18	T34534218	A17	7/25/2024	38	T34534238	PB1	7/25/2024
19	T34534219	A18	7/25/2024	39	T34534239	PB2	7/25/2024
20	T34534220	A19	7/25/2024	40	T34534240	PB3	7/25/2024

The truss drawing(s) referenced above have been prepared by
MiTek USA, Inc under my direct supervision
based on the parameters provided by Tibbetts Lumber Co., LLC.

Truss Design Engineer's Name: Velez, Joaquin
My license renewal date for the state of Florida is February 28, 2025.
Florida COA: 6634

IMPORTANT NOTE: The seal on these truss component designs is a certification that the engineer named is licensed in the jurisdiction(s) identified and that the designs comply with ANSI/TPI 1. These designs are based upon parameters shown (e.g., loads, supports, dimensions, shapes and design codes), which were given to MiTek. Any project specific information included is for MiTek customers file reference purpose only, and was not taken into account in the preparation of these designs. MiTek has not independently verified the applicability of the design parameters or the designs for any particular building. Before use, the building designer should verify applicability of design parameters and properly incorporate these designs into the overall building design per ANSI/TPI 1, Chapter 2.

JOAQUIN VELEZ
LICENSE
No 68182
STATE OF
FLORIDA
PROFESSIONAL ENGINEER

Joaquin Velez PE No.68182
MiTek Inc. DBA MiTek USA FL Cert 6634
16023 Swingley Ridge Rd. Chesterfield, MO 63017
Date: July 25, 2024

Velez, Joaquin

RE: 6243113 - 2508-CR-2 Car

MiTek, Inc.
16023 Swingley Ridge Rd.
Chesterfield, MO 63017
314.434.1200

Site Information:

Project Customer: Adams Homes-Gainesville Project Name: 6243113
Lot/Block: 096 Subdivision: The Preserve at Laurel Lake
Address: 715 SW Rosemary Dr
City, County: Lake City State: fl

No.	Seal#	Truss Name	Date
41	T34534241	PB4	7/25/2024

Job	Truss	Truss Type	Qty	Ply	2508-CR-2 Car
6243113	A01	Half Hip Girder	1	2	T34534201
					Job Reference (optional)

Tibbetts Lumber Co., LLC (Ocala, FL), Ocala, FL - 34472, 8.730 s Jul 11 2024 MiTek Industries, Inc. Wed Jul 24 11:26:43 2024 Page 1

ID:Ts3RJ0261_Xu2fYgSyBHAWzZSLZ-f2cEOvzVzUm0zLfa7K3HvNytQ2NHsjkV9c2TSYyusww

-2-0-0	7-0-0	12-4-9	17-7-5	22-10-2	28-0-14	33-3-11	38-6-7	43-11-0
2-0-0	7-0-0	5-4-9	5-2-13	5-2-13	5-2-13	5-2-13	5-2-13	5-4-9

Scale = 1:77.1

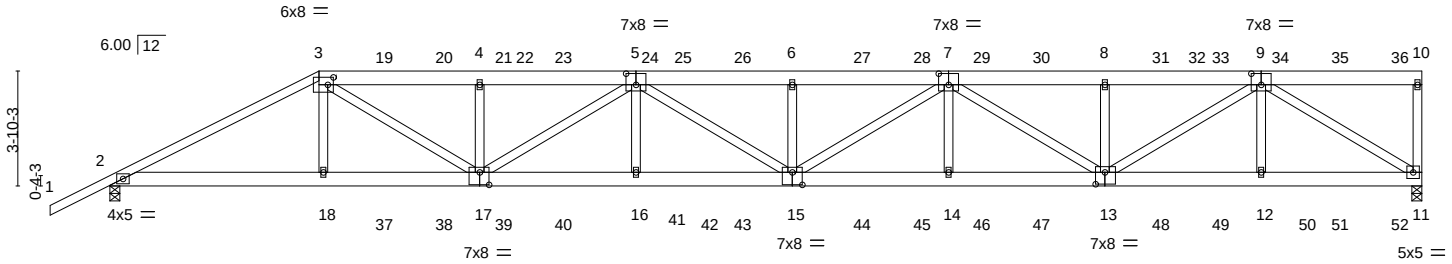

7-0-0	12-4-9	17-7-5	22-10-2	28-0-14	33-3-11	38-6-7	43-11-0
7-0-0	5-4-9	5-2-13	5-2-13	5-2-13	5-2-13	5-2-13	5-4-9

Plate Offsets (X,Y)-- [3:0-2-4,0-3-0], [5:0-4-0,0-4-8], [7:0-4-0,0-4-8], [9:0-4-0,0-4-8], [13:0-3-12,0-4-12], [15:0-4-0,0-5-0], [17:0-3-12,0-5-0]

LOADING (psf)		**SPACING-** 2-0-0	**CSI.**		**DEFL.** in (loc) l/defl L/d		**PLATES**	**GRIP**
TCLL	20.0	Plate Grip DOL 1.25	TC	0.77	Vert(LL) -0.40 15 >999 360		MT20	244/190
TCDL	10.0	Lumber DOL 1.25	BC	0.98	Vert(CT) -0.82 15 >641 240			
BCLL	0.0 *	Rep Stress Incr NO	WB	0.84	Horz(CT) 0.17 11 n/a n/a			
BCDL	10.0	Code FBC2023/TPI2014	Matrix-S		Wind(LL) 0.27 15 >999 240		Weight: 597 lb	FT = 20%

LUMBER-

TOP CHORD 2x6 SP No.2 *Except*
1-3: 2x4 SP No.2

BOT CHORD 2x6 SP No.2 *Except*
15-17: 2x6 SP DSS

WEBS 2x4 SP No.2

BRACING-

TOP CHORD Structural wood sheathing directly applied or 3-10-14 oc purlins, except end verticals.

BOT CHORD Rigid ceiling directly applied or 10-0-0 oc bracing.

REACTIONS. (size) 11=0-4-0, 2=0-4-0
Max Horz 2=119(LC 27)
Max Uplift 11=-261(LC 8), 2=-229(LC 8)
Max Grav 11=3631(LC 1), 2=3443(LC 1)

FORCES. (lb) - Max. Comp./Max. Ten. - All forces 250 (lb) or less except when shown.

TOP CHORD 2-3=-6883/334, 3-4=-9345/592, 4-5=-9343/591, 5-6=-11550/791, 6-7=-11550/791, 7-8=-8477/597, 8-9=-8477/597, 10-11=-310/94

BOT CHORD 2-18=-324/6066, 17-18=-316/6086, 16-17=-744/11142, 15-16=-744/11142, 14-15=-747/10682, 13-14=-747/10682, 12-13=-356/4974, 11-12=-356/4974

WEBS 3-18=0/661, 3-17=-326/3928, 4-17=-715/217, 5-17=-2163/182, 5-16=0/464, 5-15=-65/519, 6-15=-612/200, 7-15=-52/1033, 7-14=0/453, 7-13=-2628/178, 8-13=-612/194, 9-13=-287/4173, 9-12=0/491, 9-11=-5865/420

NOTES-

1) 2-ply truss to be connected together with 10d (0.131"x3") nails as follows:
Top chords connected as follows: 2x4 - 1 row at 0-9-0 oc, 2x6 - 2 rows staggered at 0-9-0 oc.
Bottom chords connected as follows: 2x6 - 2 rows staggered at 0-9-0 oc.
Webs connected as follows: 2x4 - 1 row at 0-9-0 oc.
2) All loads are considered equally applied to all plies, except if noted as front (F) or back (B) face in the LOAD CASE(S) section. Ply to ply connections have been provided to distribute only loads noted as (F) or (B), unless otherwise indicated.
3) Unbalanced roof live loads have been considered for this design.
4) Wind: ASCE 7-22; Vult=130mph (3-second gust) Vasd=101mph; TCDL=4.2psf; BCDL=6.0psf; h=15ft; B=45ft; L=24ft; eave=5ft; Cat. II; Exp B; Encl., GCpi=0.18; MWFRS (directional); cantilever left and right exposed ; Lumber DOL=1.60 plate grip DOL=1.60
5) Building Designer / Project engineer responsible for verifying applied roof live load shown covers rain loading requirements specific to the use of this truss component.
6) Provide adequate drainage to prevent water ponding.
7) All plates are 2x4 MT20 unless otherwise indicated.
8) This truss has been designed for a 10.0 psf bottom chord live load nonconcurrent with any other live loads.
9) * This truss has been designed for a live load of 20.0psf on the bottom chord in all areas where a rectangle 3-6-0 tall by 2-0-0 wide will fit between the bottom chord and any other members.
10) Provide mechanical connection (by others) of truss to bearing plate capable of withstanding 100 lb uplift at joint(s) except (jt=lb) 11=261, 2=229.

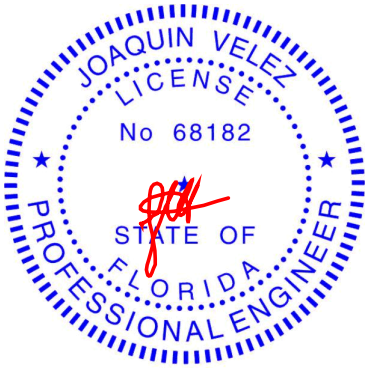

Joaquin Velez PE No.68182
MiTek Inc. DBA MiTek USA FL Cert 6634
16023 Swingley Ridge Rd. Chesterfield, MO 63017

Date:

July 25,2024

Continued on page 2

NOTES-

11) Hanger(s) or other connection device(s) shall be provided sufficient to support concentrated load(s) 141 lb down and 86 lb up at 7-0-0, 122 lb down and 83 lb up at 9-0-12, 122 lb down and 83 lb up at 11-0-12, 122 lb down and 83 lb up at 13-0-12, 122 lb down and 83 lb up at 15-0-12, 122 lb down and 83 lb up at 17-0-12, 122 lb down and 83 lb up at 19-0-12, 122 lb down and 83 lb up at 21-0-12, 122 lb down and 83 lb up at 23-0-12, 122 lb down and 83 lb up at 25-0-12, 122 lb down and 83 lb up at 27-0-12, 122 lb down and 83 lb up at 29-0-12, 122 lb down and 83 lb up at 31-0-12, 122 lb down and 83 lb up at 33-0-12, 122 lb down and 83 lb up at 35-0-12, 122 lb down and 83 lb up at 37-0-12, 122 lb down and 83 lb up at 39-0-12, and 122 lb down and 83 lb up at 41-0-12, and 131 lb down and 80 lb up at 43-0-12 on top chord, and 310 lb down at 7-0-0, 95 lb down at 9-0-12, 95 lb down at 11-0-12, 95 lb down at 13-0-12, 95 lb down at 15-0-12, 95 lb down at 17-0-12, 95 lb down at 19-0-12, 95 lb down at 21-0-12, 95 lb down at 23-0-12, 95 lb down at 25-0-12, 95 lb down at 27-0-12, 95 lb down at 29-0-12, 95 lb down at 31-0-12, 95 lb down at 33-0-12, 95 lb down at 35-0-12, 95 lb down at 37-0-12, 95 lb down at 39-0-12, and 95 lb down at 41-0-12, and 101 lb down at 43-0-12 on bottom chord. The design/selection of such connection device(s) is the responsibility of others.

LOAD CASE(S) Standard

1) Dead + Roof Live (balanced): Lumber Increase=1.25, Plate Increase=1.25
   Uniform Loads (plf)
   Vert: 1-3=-60, 3-10=-60, 2-11=-20
   Concentrated Loads (lb)
   Vert: 3=-122(F) 18=-262(F) 15=-48(F) 6=-122(F) 13=-48(F) 8=-122(F) 19=-122(F) 20=-122(F) 21=-122(F) 23=-122(F) 24=-122(F) 25=-122(F) 26=-122(F) 27=-122(F) 28=-122(F) 29=-122(F) 30=-122(F) 31=-122(F) 33=-122(F) 34=-122(F) 35=-122(F) 36=-131(F) 37=-48(F) 38=-48(F) 39=-48(F) 40=-48(F) 41=-48(F) 42=-48(F) 43=-48(F) 44=-48(F) 45=-48(F) 46=-48(F) 47=-48(F) 48=-48(F) 49=-48(F) 50=-48(F) 51=-48(F) 52=-51(F)

Job	Truss	Truss Type	Qty	Ply	2508-CR-2 Car
6243113	A02	Half Hip	1	1	T34534202
					Job Reference (optional)

Tibbetts Lumber Co., LLC (Ocala, FL), Ocala, FL - 34472, 8.730 s Jul 11 2024 MiTek Industries, Inc. Wed Jul 24 11:26:44 2024 Page 1

ID:Ts3RJ0261_Xu2fYgSyBHAWzZSLZ-7FAdbFz7knutbVEmg1bWRaV3kSm4bAYeNGn0_?yuswv

-2-0-0	6-4-12	9-0-0	16-0-14	22-11-15	29-11-1	36-10-2	43-11-0
2-0-0	6-4-12	2-7-3	7-0-14	6-11-2	6-11-2	6-11-2	7-0-14

Scale = 1:77.4

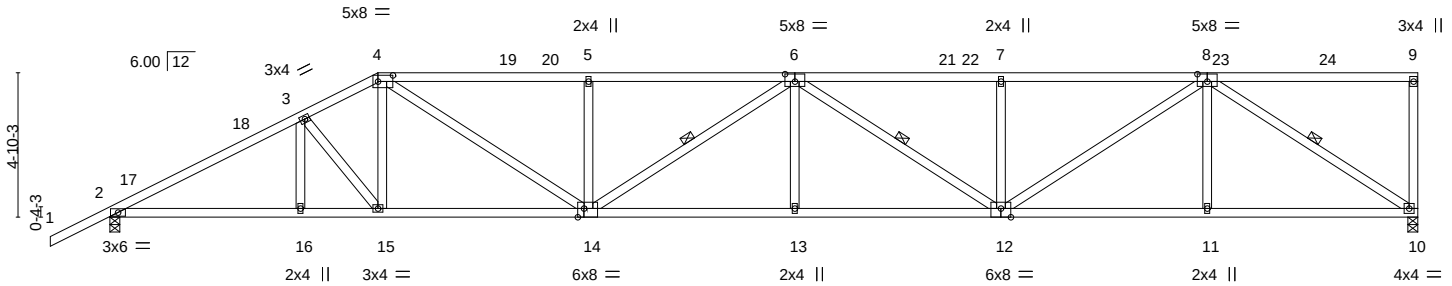

6-4-12	9-0-0	16-0-14	22-11-15	29-11-1	36-10-2	43-11-0
6-4-12	2-7-3	7-0-14	6-11-2	6-11-2	6-11-2	7-0-14

Plate Offsets (X,Y)-- [4:0-6-0,0-2-8], [6:0-4-0,0-3-0], [8:0-4-0,0-3-0], [12:0-4-0,Edge], [14:0-2-8,Edge]

LOADING (psf)		**SPACING-** 2-0-0	**CSI.**		**DEFL.** in (loc) l/defl L/d		**PLATES**	**GRIP**
TCLL	20.0	Plate Grip DOL 1.25	TC	0.74	Vert(LL) -0.34 13 >999 360		MT20	244/190
TCDL	10.0	Lumber DOL 1.25	BC	0.82	Vert(CT) -0.69 13-14 >761 240			
BCLL	0.0 *	Rep Stress Incr YES	WB	0.86	Horz(CT) 0.20 10 n/a n/a			
BCDL	10.0	Code FBC2023/TPI2014	Matrix-S		Wind(LL) 0.20 13 >999 240		Weight: 243 lb	FT = 20%

LUMBER-

TOP CHORD 2x4 SP No.2 *Except*
4-6: 2x4 SP M 31 or 2x4 SP SS

BOT CHORD 2x4 SP No.2 *Except*
12-14: 2x4 SP M 31 or 2x4 SP SS

WEBS 2x4 SP No.2

BRACING-

TOP CHORD Structural wood sheathing directly applied or 2-2-0 oc purlins, except end verticals.

BOT CHORD Rigid ceiling directly applied or 10-0-0 oc bracing.

WEBS 1 Row at midpt 6-14, 6-12, 8-10

REACTIONS. (size) 10=0-4-0, 2=0-4-0
Max Horz 2=144(LC 12)
Max Uplift 10=-80(LC 12), 2=-133(LC 12)
Max Grav 10=1741(LC 1), 2=1877(LC 1)

FORCES. (lb) - Max. Comp./Max. Ten. - All forces 250 (lb) or less except when shown.

TOP CHORD 2-3=-3340/213, 3-4=-3064/231, 4-5=-3923/274, 5-6=-3923/275, 6-7=-3670/232, 7-8=-3670/232

BOT CHORD 2-16=-261/2886, 15-16=-261/2886, 14-15=-216/2711, 13-14=-276/4212, 12-13=-276/4212, 11-12=-145/2302, 10-11=-145/2302

WEBS 3-15=-292/69, 4-15=0/362, 4-14=-80/1441, 5-14=-447/132, 6-14=-346/16, 6-13=0/275, 6-12=-649/52, 7-12=-407/111, 8-12=-106/1637, 8-11=0/299, 8-10=-2721/171

NOTES-

1) Wind: ASCE 7-22; Vult=130mph (3-second gust) Vasd=101mph; TCDL=4.2psf; BCDL=6.0psf; h=15ft; B=45ft; L=24ft; eave=5ft; Cat. II; Exp B; Encl., GCpi=0.18; MWFRS (directional) and C-C Zone3 -2-0-0 to 1-0-0, Zone1 1-0-0 to 9-0-0, Zone2 9-0-0 to 13-2-15, Zone1 13-2-15 to 43-9-4 zone; cantilever left and right exposed ;C-C for members and forces & MWFRS for reactions shown; Lumber DOL=1.60 plate grip DOL=1.60
2) Building Designer / Project engineer responsible for verifying applied roof live load shown covers rain loading requirements specific to the use of this truss component.
3) Provide adequate drainage to prevent water ponding.
4) This truss has been designed for a 10.0 psf bottom chord live load nonconcurrent with any other live loads.
5) * This truss has been designed for a live load of 20.0psf on the bottom chord in all areas where a rectangle 3-6-0 tall by 2-0-0 wide will fit between the bottom chord and any other members.
6) Provide mechanical connection (by others) of truss to bearing plate capable of withstanding 100 lb uplift at joint(s) 10 except (jt=lb) 2=133.

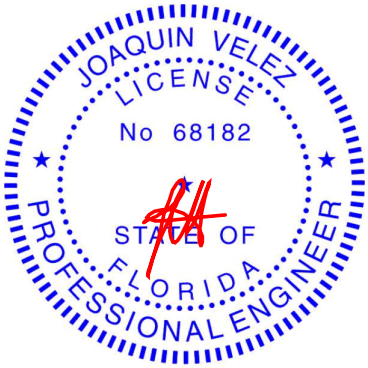

Joaquin Velez PE No.68182
MiTek Inc. DBA MiTek USA FL Cert 6634
16023 Swingley Ridge Rd. Chesterfield, MO 63017
Date:

July 25,2024

Job	Truss	Truss Type	Qty	Ply	2508-CR-2 Car
6243113	A03	Half Hip	1	1	T34534203
					Job Reference (optional)

Tibbetts Lumber Co., LLC (Ocala, FL), Ocala, FL - 34472, 8.730 s Jul 11 2024 MiTek Industries, Inc. Wed Jul 24 11:26:44 2024 Page 1

ID:Ts3RJ0261_Xu2fYgSyBHAWzZSLZ-7FAdbFz7knutbVEmg1bWRaV3dSkkbBPeNGn0_?yuswv

-2-0-0	6-4-11	10-2-8	17-0-7	23-8-10	30-4-14	37-1-1	43-11-0
2-0-0	6-4-11	3-9-13	6-9-15	6-8-3	6-8-3	6-8-3	6-9-15

Scale = 1:77.4

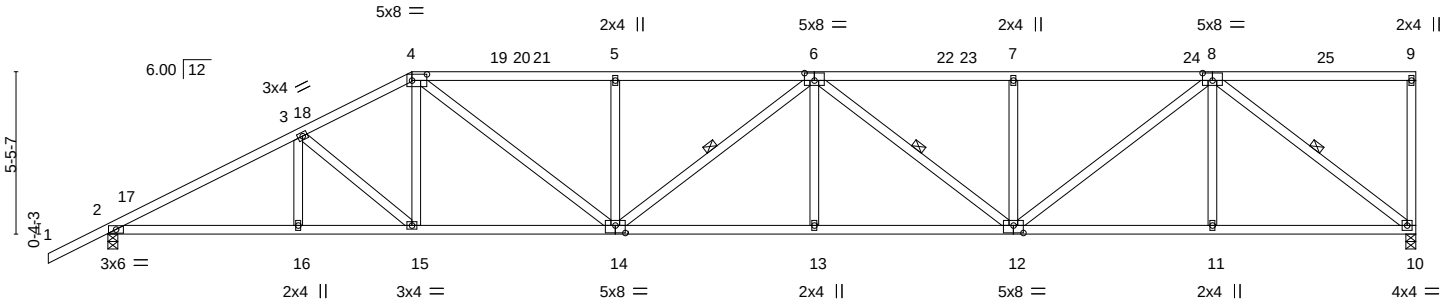

6-4-11	10-2-8	17-0-7	23-8-10	30-4-14	37-1-1	43-11-0
6-4-11	3-9-13	6-9-15	6-8-3	6-8-3	6-8-3	6-9-15

Plate Offsets (X,Y)-- [4:0-6-0,0-2-8], [6:0-4-0,0-3-0], [8:0-4-0,0-3-0], [12:0-4-0,0-3-0], [14:0-4-0,0-3-0]

LOADING (psf)		**SPACING-** 2-0-0	**CSI.**		**DEFL.** in (loc) l/defl L/d	**PLATES**	**GRIP**
TCLL	20.0	Plate Grip DOL 1.25	TC	0.74	Vert(LL) -0.29 13-14 >999 360	MT20	244/190
TCDL	10.0	Lumber DOL 1.25	BC	0.90	Vert(CT) -0.61 13-14 >860 240		
BCLL	0.0 *	Rep Stress Incr YES	WB	0.81	Horz(CT) 0.20 10 n/a n/a		
BCDL	10.0	Code FBC2023/TPI2014	Matrix-S		Wind(LL) 0.18 13-14 >999 240	Weight: 251 lb	FT = 20%

LUMBER-

TOP CHORD 2x4 SP No.2 *Except*
4-6: 2x4 SP M 31 or 2x4 SP SS
BOT CHORD 2x4 SP No.2
WEBS 2x4 SP No.2

BRACING-

TOP CHORD Structural wood sheathing directly applied or 2-2-3 oc purlins, except end verticals.
BOT CHORD Rigid ceiling directly applied or 10-0-0 oc bracing.
WEBS 1 Row at midpt 6-14, 6-12, 8-10

REACTIONS. (size) 10=0-4-0, 2=0-4-0
Max Horz 2=158(LC 12)
Max Uplift 10=-82(LC 12), 2=-132(LC 12)
Max Grav 10=1741(LC 1), 2=1877(LC 1)

FORCES. (lb) - Max. Comp./Max. Ten. - All forces 250 (lb) or less except when shown.
TOP CHORD 2-3=-3343/209, 3-4=-2982/223, 4-5=-3543/257, 5-6=-3542/257, 6-7=-3177/207, 7-8=-3177/207
BOT CHORD 2-16=-273/2889, 15-16=-273/2889, 14-15=-218/2624, 13-14=-251/3700, 12-13=-251/3700, 11-12=-128/1973, 10-11=-128/1973
WEBS 3-15=-356/71, 4-15=0/381, 4-14=-61/1151, 5-14=-433/128, 6-13=0/265, 6-12=-661/55, 7-12=-393/107, 8-12=-102/1521, 8-11=0/289, 8-10=-2464/159

NOTES-

1) Wind: ASCE 7-22; Vult=130mph (3-second gust) Vasd=101mph; TCDL=4.2psf; BCDL=6.0psf; h=15ft; B=45ft; L=24ft; eave=5ft; Cat. II; Exp B; Encl., GCpi=0.18; MWFRS (directional) and C-C Zone3 -2-0-0 to 1-0-0, Zone1 1-0-0 to 10-2-8, Zone2 10-2-8 to 14-5-7, Zone1 14-5-7 to 43-9-4 zone; cantilever left and right exposed ;C-C for members and forces & MWFRS for reactions shown; Lumber DOL=1.60 plate grip DOL=1.60
2) Building Designer / Project engineer responsible for verifying applied roof live load shown covers rain loading requirements specific to the use of this truss component.
3) Provide adequate drainage to prevent water ponding.
4) This truss has been designed for a 10.0 psf bottom chord live load nonconcurrent with any other live loads.
5) * This truss has been designed for a live load of 20.0psf on the bottom chord in all areas where a rectangle 3-6-0 tall by 2-0-0 wide will fit between the bottom chord and any other members.
6) Provide mechanical connection (by others) of truss to bearing plate capable of withstanding 100 lb uplift at joint(s) 10 except (jt=lb) 2=132.

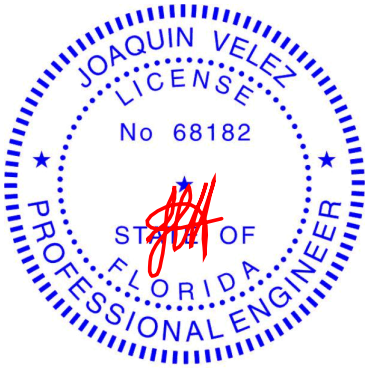

Joaquin Velez PE No.68182
MiTek Inc. DBA MiTek USA FL Cert 6634
16023 Swingley Ridge Rd. Chesterfield, MO 63017

Date:

July 25,2024

Job	Truss	Truss Type	Qty	Ply	2508-CR-2 Car
6243113	A04	Hip	1	1	T34534204
					Job Reference (optional)

Tibbetts Lumber Co., LLC (Ocala, FL), Ocala, FL - 34472, 8.730 s Jul 11 2024 MiTek Industries, Inc. Wed Jul 24 11:26:45 2024 Page 1

ID:Ts3RJ0261_Xu2fYgSyBHAWzZSLZ-bRk?pb_lV50kCfpzEl6l_o2DMs6WKfxncwXZWRyuswu

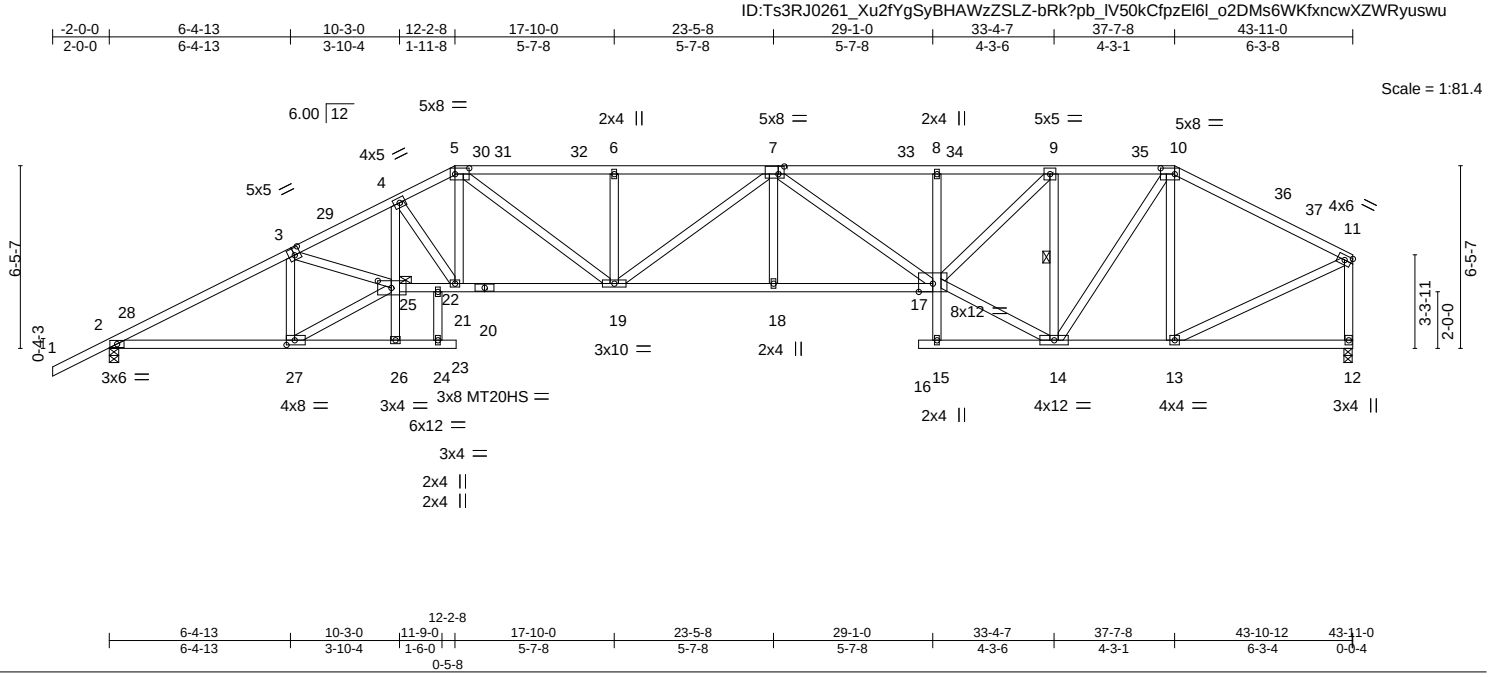

Plate Offsets (X,Y)-- [3:0-2-8,0-3-0], [5:0-6-0,0-2-8], [7:0-2-8,0-3-4], [10:0-6-0,0-2-8], [25:0-5-12,0-3-0], [27:0-3-8,0-2-0]

LOADING (psf)		**SPACING-** 2-0-0	**CSI.**		**DEFL.** in (loc) l/defl L/d	**PLATES**	**GRIP**
TCLL	20.0	Plate Grip DOL 1.25	TC	0.81	Vert(LL) -0.43 18-19 >999 360	MT20	244/190
TCDL	10.0	Lumber DOL 1.25	BC	0.80	Vert(CT) -0.87 18-19 >599 240	MT20HS	187/143
BCLL	0.0 *	Rep Stress Incr YES	WB	0.73	Horz(CT) 0.40 12 n/a n/a		
BCDL	10.0	Code FBC2023/TPI2014	Matrix-S		Wind(LL) 0.26 18-19 >999 240	Weight: 284 lb	FT = 20%

LUMBER-

TOP CHORD 2x4 SP No.2

BOT CHORD 2x4 SP No.2 *Except*
20-25,17-20: 2x4 SP M 31 or 2x4 SP SS

WEBS 2x4 SP No.2

BRACING-

TOP CHORD Structural wood sheathing directly applied or 2-2-0 oc purlins, except end verticals.

BOT CHORD Rigid ceiling directly applied or 10-0-0 oc bracing. Except: 10-0-0 oc bracing: 21-22, 15-17

WEBS 1 Row at midpt 9-14

JOINTS 1 Brace at Jt(s): 25

REACTIONS. (size) 2=0-4-0, 12=0-3-8
Max Horz 2=108(LC 12)
Max Uplift 2=-128(LC 12), 12=-70(LC 12)
Max Grav 2=1891(LC 1), 12=1753(LC 1)

FORCES. (lb) - Max. Comp./Max. Ten. - All forces 250 (lb) or less except when shown.

TOP CHORD 2-3=-3382/208, 3-4=-4945/360, 4-5=-4112/312, 5-6=-4470/336, 6-7=-4469/336, 7-8=-4124/310, 8-9=-4093/309, 9-10=-2271/211, 10-11=-1814/153, 11-12=-1692/161

BOT CHORD 2-27=-212/2924, 4-25=-80/1222, 22-25=-285/4370, 21-22=-285/4369, 19-21=-211/3708, 18-19=-254/4624, 17-18=-254/4624, 8-17=-297/85, 13-14=-80/1534

WEBS 3-27=-1464/186, 25-27=-237/3224, 3-25=-71/1470, 4-21=-1185/127, 5-21=-39/1008, 5-19=-63/1058, 6-19=-347/107, 7-19=-300/4, 7-17=-646/36, 14-17=-135/2444, 9-17=-139/2584, 9-14=-2067/170, 10-14=-82/1336, 10-13=-615/109, 11-13=-82/1671

NOTES-

1) Unbalanced roof live loads have been considered for this design.
2) Wind: ASCE 7-22; Vult=130mph (3-second gust) Vasd=101mph; TCDL=4.2psf; BCDL=6.0psf; h=15ft; B=45ft; L=24ft; eave=5ft; Cat. II; Exp B; Encl., GCpi=0.18; MWFRS (directional) and C-C Zone3 -2-0-0 to 1-0-0, Zone1 1-0-0 to 12-2-8, Zone2 12-2-8 to 16-5-7, Zone1 16-5-7 to 37-7-8, Zone2 37-7-8 to 41-10-7, Zone1 41-10-7 to 43-9-4 zone; cantilever left and right exposed ;C-C for members and forces & MWFRS for reactions shown; Lumber DOL=1.60 plate grip DOL=1.60
3) Building Designer / Project engineer responsible for verifying applied roof live load shown covers rain loading requirements specific to the use of this truss component.
4) Provide adequate drainage to prevent water ponding.
5) All plates are MT20 plates unless otherwise indicated.
6) This truss has been designed for a 10.0 psf bottom chord live load nonconcurrent with any other live loads.
7) * This truss has been designed for a live load of 20.0psf on the bottom chord in all areas where a rectangle 3-6-0 tall by 2-0-0 wide will fit between the bottom chord and any other members.
8) Provide mechanical connection (by others) of truss to bearing plate capable of withstanding 100 lb uplift at joint(s) 12 except (jt=lb) 2=128.

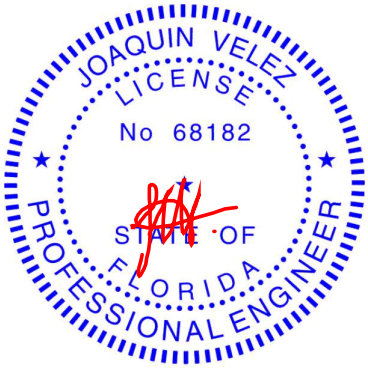

Joaquin Velez PE No.68182
MiTek Inc. DBA MiTek USA FL Cert 6634
16023 Swingley Ridge Rd. Chesterfield, MO 63017
Date:

July 25,2024

Job	Truss	Truss Type	Qty	Ply	2508-CR-2 Car
6243113	A05	Hip	1	1	T34534205
					Job Reference (optional)

Tibbetts Lumber Co., LLC (Ocala, FL), Ocala, FL - 34472, 8.730 s Jul 11 2024 MiTek Industries, Inc. Wed Jul 24 11:26:46 2024 Page 1
ID:Ts3RJ0261_Xu2fYgSyBHAWzZSLZ-3dIN0x?NGP8bqpO9oSd_W?aPvGSl36xxraG73tyuswt

-2-0-0	6-4-13	10-5-4	14-2-8	21-7-12	29-1-0	35-7-8	39-5-4	43-11-0
2-0-0	6-4-13	4-0-8	3-9-4	7-5-4	7-5-4	6-6-8	3-9-12	4-5-12

Scale = 1:80.1

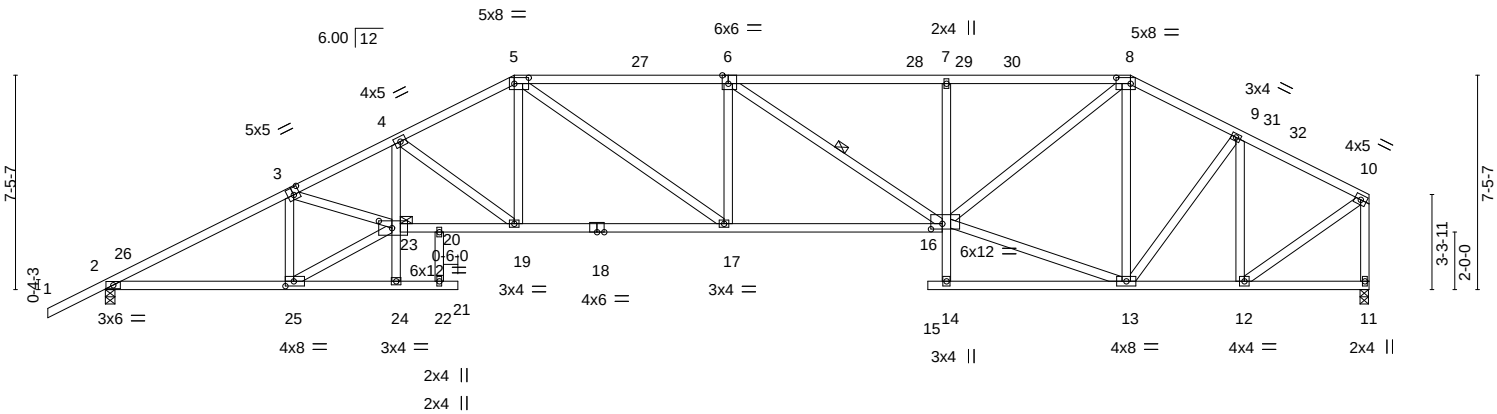

6-4-13	10-3-0	11-9-0	14-2-8	21-7-12	29-1-0	35-7-8	39-5-4	43-10-12	43-11-0
6-4-13	3-10-4	1-6-0	2-5-8	7-5-4	7-5-4	6-6-8	3-9-12	4-5-8	0-0-4

Plate Offsets (X,Y)-- [3:0-2-8,0-3-0], [5:0-6-0,0-2-8], [6:0-2-8,Edge], [8:0-6-0,0-2-8], [16:0-4-12,0-2-4], [23:0-5-8,0-3-0], [25:0-3-8,0-2-0]

LOADING (psf)		SPACING-	2-0-0	CSI.		DEFL.	in	(loc)	l/defl	L/d	PLATES	GRIP
TCLL	20.0	Plate Grip DOL	1.25	TC	0.76	Vert(LL)	-0.32	17-19	>999	360	MT20	244/190
TCDL	10.0	Lumber DOL	1.25	BC	0.80	Vert(CT)	-0.68	17-19	>767	240		
BCLL	0.0 *	Rep Stress Incr	YES	WB	0.74	Horz(CT)	0.33	11	n/a	n/a		
BCDL	10.0	Code FBC2023/TPI2014		Matrix-S		Wind(LL)	0.20	17-19	>999	240	Weight: 284 lb	FT = 20%

LUMBER-

TOP CHORD 2x4 SP No.2 *Except*
5-6: 2x4 SP M 31 or 2x4 SP SS
BOT CHORD 2x4 SP No.2 *Except*
18-23,16-18: 2x4 SP M 31 or 2x4 SP SS
WEBS 2x4 SP No.2

BRACING-

TOP CHORD Structural wood sheathing directly applied or 2-2-0 oc purlins, except end verticals.
BOT CHORD Rigid ceiling directly applied or 10-0-0 oc bracing. Except:
10-0-0 oc bracing: 14-16
WEBS 1 Row at midpt 6-16
JOINTS 1 Brace at Jt(s): 23

REACTIONS. (size) 2=0-4-0, 11=0-3-8
Max Horz 2=108(LC 12)
Max Uplift 2=-128(LC 12), 11=-70(LC 12)
Max Grav 2=1891(LC 1), 11=1753(LC 1)

FORCES. (lb) - Max. Comp./Max. Ten. - All forces 250 (lb) or less except when shown.
TOP CHORD 2-3=-3381/206, 3-4=-4941/357, 4-5=-3663/288, 5-6=-3784/308, 6-7=-3356/287, 7-8=-3340/290, 8-9=-1901/191, 9-10=-1538/132, 10-11=-1708/151
BOT CHORD 2-25=-209/2923, 4-23=-52/1210, 20-23=-288/4383, 19-20=-289/4381, 17-19=-173/3270, 16-17=-199/3784, 7-16=-437/129, 12-13=-81/1328
WEBS 3-25=-1454/179, 23-25=-227/3209, 3-23=-74/1473, 4-19=-1407/144, 5-19=-8/925, 5-17=-42/785, 6-17=-280/122, 6-16=-570/32, 13-16=-82/1659, 8-16=-134/2189, 8-13=-825/88, 9-13=0/595, 9-12=-853/104, 10-12=-96/1600

NOTES-

1) Unbalanced roof live loads have been considered for this design.
2) Wind: ASCE 7-22; Vult=130mph (3-second gust) Vasd=101mph; TCDL=4.2psf; BCDL=6.0psf; h=15ft; B=45ft; L=24ft; eave=5ft; Cat. II; Exp B; Encl., GCpi=0.18; MWFRS (directional) and C-C Zone3 -2-0-0 to 1-0-0, Zone1 1-0-0 to 14-2-8, Zone2 14-2-8 to 18-5-7, Zone1 18-5-7 to 35-7-8, Zone2 35-7-8 to 39-10-7, Zone1 39-10-7 to 43-9-4 zone; cantilever left and right exposed ;C-C for members and forces & MWFRS for reactions shown; Lumber DOL=1.60 plate grip DOL=1.60
3) Building Designer / Project engineer responsible for verifying applied roof live load shown covers rain loading requirements specific to the use of this truss component.
4) Provide adequate drainage to prevent water ponding.
5) This truss has been designed for a 10.0 psf bottom chord live load nonconcurrent with any other live loads.
6) * This truss has been designed for a live load of 20.0psf on the bottom chord in all areas where a rectangle 3-6-0 tall by 2-0-0 wide will fit between the bottom chord and any other members.
7) Provide mechanical connection (by others) of truss to bearing plate capable of withstanding 100 lb uplift at joint(s) 11 except (jt=lb) 2=128.

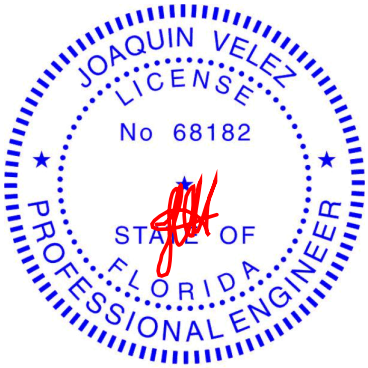

Joaquin Velez PE No.68182
MiTek Inc. DBA MiTek USA FL Cert 6634
16023 Swingley Ridge Rd. Chesterfield, MO 63017
Date:

July 25,2024

MiTek®
16023 Swingley Ridge Rd.
Chesterfield, MO 63017
314.434.1200 / MiTek-US.com

Job	Truss	Truss Type	Qty	Ply	2508-CR-2 Car
6243113	A06	Hip	1	1	T34534206
					Job Reference (optional)

Tibbetts Lumber Co., LLC (Ocala, FL), Ocala, FL - 34472, 8.730 s Jul 11 2024 MiTek Industries, Inc. Wed Jul 24 11:26:47 2024 Page 1
ID:Ts3RJ0261_Xu2fYgSyBHAWzZSLZ-XqslEH0?1iGSSyzLMA8D3D7WpglLoYI44E0gbKyusws

-2-0-0	6-4-13	10-3-0	16-2-8	22-7-12	29-1-0	33-7-8	39-5-3	43-11-0
2-0-0	6-4-13	3-10-4	5-11-8	6-5-4	6-5-4	4-6-8	5-9-11	4-5-13

Scale = 1:80.1

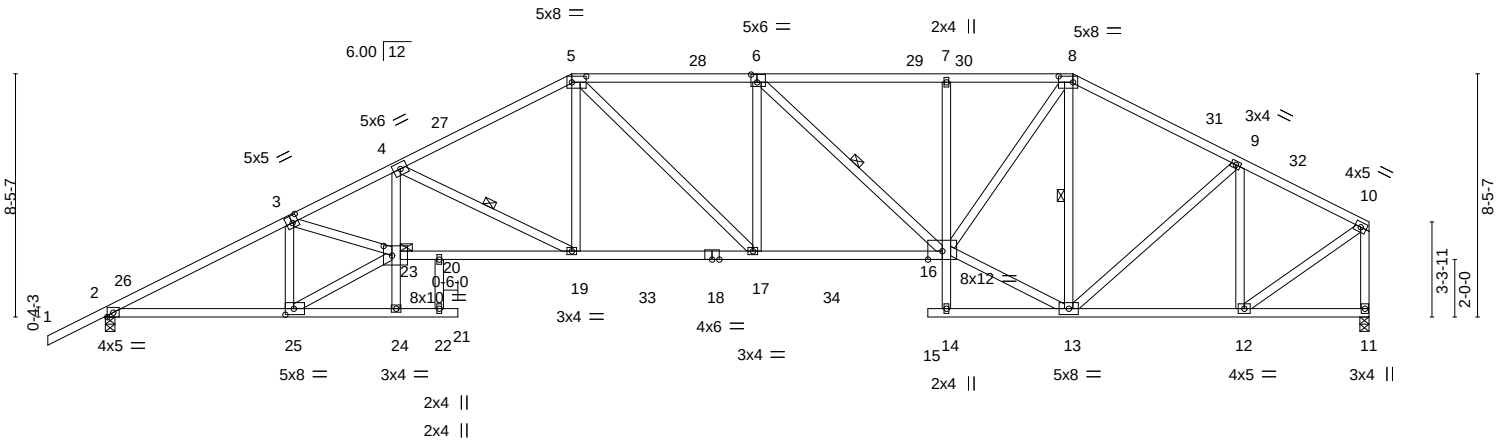

6-4-13	10-3-0	11-9-0	16-2-8	22-7-12	29-1-0	33-7-8	39-5-3	43-11-0
6-4-13	3-10-4	1-6-0	4-5-8	6-5-4	6-5-4	4-6-8	5-9-11	4-5-13

Plate Offsets (X,Y)-- [3:0-2-8,0-3-0], [5:0-6-0,0-2-8], [6:0-2-8,0-3-4], [8:0-6-0,0-2-8], [23:0-3-8,0-4-0], [25:0-3-8,0-2-8]

LOADING (psf)		SPACING- 2-0-0		CSI.		DEFL.	in	(loc)	l/defl	L/d	PLATES	GRIP
TCLL	20.0	Plate Grip DOL	1.25	TC	1.00	Vert(LL)	-0.37	17-19	>999	360	MT20	244/190
TCDL	10.0	Lumber DOL	1.25	BC	0.97	Vert(CT)	-0.67	17-19	>778	240		
BCLL	0.0 *	Rep Stress Incr	YES	WB	0.80	Horz(CT)	0.35	11	n/a	n/a		
BCDL	10.0	Code FBC2023/TPI2014		Matrix-S		Wind(LL)	0.18	19	>999	240	Weight: 291 lb	FT = 20%

LUMBER-
TOP CHORD 2x4 SP No.2
BOT CHORD 2x4 SP No.2 *Except*
18-23,16-18: 2x4 SP M 31 or 2x4 SP SS
WEBS 2x4 SP No.2

BRACING-
TOP CHORD Structural wood sheathing directly applied, except end verticals.
BOT CHORD Rigid ceiling directly applied or 10-0-0 oc bracing, Except:
2-2-0 oc bracing: 2-25.
10-0-0 oc bracing: 14-16
WEBS 1 Row at midpt 4-19, 6-16, 8-13
JOINTS 1 Brace at Jt(s): 23

REACTIONS. (size) 2=0-4-0, 11=0-3-13
Max Horz 2=122(LC 11)
Max Uplift 2=-128(LC 12), 11=-70(LC 12)
Max Grav 2=2117(LC 17), 11=1944(LC 18)

FORCES. (lb) - Max. Comp./Max. Ten. - All forces 250 (lb) or less except when shown.
TOP CHORD 2-3=-3832/206, 3-4=-5700/351, 4-5=-3769/275, 5-6=-3560/289, 6-7=-3104/269, 7-8=-3088/268, 8-9=-2177/205, 9-10=-1709/132, 10-11=-1881/147
BOT CHORD 2-25=-210/3408, 4-23=-19/1507, 20-23=-295/5168, 19-20=-296/5162, 17-19=-144/3374, 16-17=-155/3591, 7-16=-338/103, 12-13=-84/1491
WEBS 3-25=-1621/167, 23-25=-208/3731, 3-23=-75/1765, 4-19=-2024/169, 5-19=0/1130, 5-17=-27/505, 6-16=-624/33, 13-16=-69/2032, 8-16=-109/2156, 8-13=-1044/87, 9-13=0/574, 9-12=-851/128, 10-12=-101/1805

NOTES-
1) Unbalanced roof live loads have been considered for this design.
2) Wind: ASCE 7-22; Vult=130mph (3-second gust) Vasd=101mph; TCDL=4.2psf; BCDL=6.0psf; h=15ft; B=45ft; L=24ft; eave=5ft; Cat. II; Exp B; Encl., GCpi=0.18; MWFRS (directional) and C-C Zone3 -2-0-0 to 1-0-0, Zone1 1-0-0 to 16-2-8, Zone2 16-2-8 to 20-5-7, Zone1 20-5-7 to 33-7-8, Zone2 33-7-8 to 37-10-7, Zone1 37-10-7 to 43-9-4 zone; cantilever left and right exposed ;C-C for members and forces & MWFRS for reactions shown; Lumber DOL=1.60 plate grip DOL=1.60
3) Building Designer / Project engineer responsible for verifying applied roof live load shown covers rain loading requirements specific to the use of this truss component.
4) Provide adequate drainage to prevent water ponding.
5) This truss has been designed for a 10.0 psf bottom chord live load nonconcurrent with any other live loads.
6) * This truss has been designed for a live load of 20.0psf on the bottom chord in all areas where a rectangle 3-6-0 tall by 2-0-0 wide will fit between the bottom chord and any other members, with BCDL = 10.0psf.
7) Provide mechanical connection (by others) of truss to bearing plate capable of withstanding 100 lb uplift at joint(s) 11 except (jt=lb) 2=128.

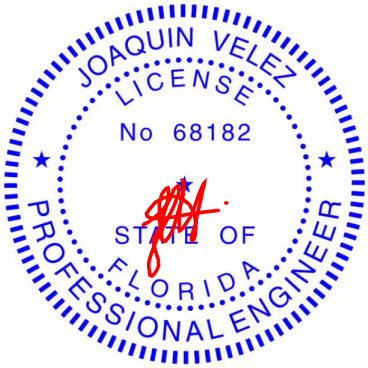

Joaquin Velez PE No.68182
MiTek Inc. DBA MiTek USA FL Cert 6634
16023 Swingley Ridge Rd. Chesterfield, MO 63017
Date:
July 25,2024

Job	Truss	Truss Type	Qty	Ply	2508-CR-2 Car
6243113	A07	Hip	1	1	T34534207 Job Reference (optional)

Tibbetts Lumber Co., LLC (Ocala, FL), Ocala, FL - 34472, 8.730 s Jul 11 2024 MiTek Industries, Inc. Wed Jul 24 11:26:48 2024 Page 1
ID:Ts3RJ0261_Xu2fYgSyBHAWzZSLZ-?0Q7Rd0do0OI36YXvtfScQgjB35UXzlEIulE7myuswr

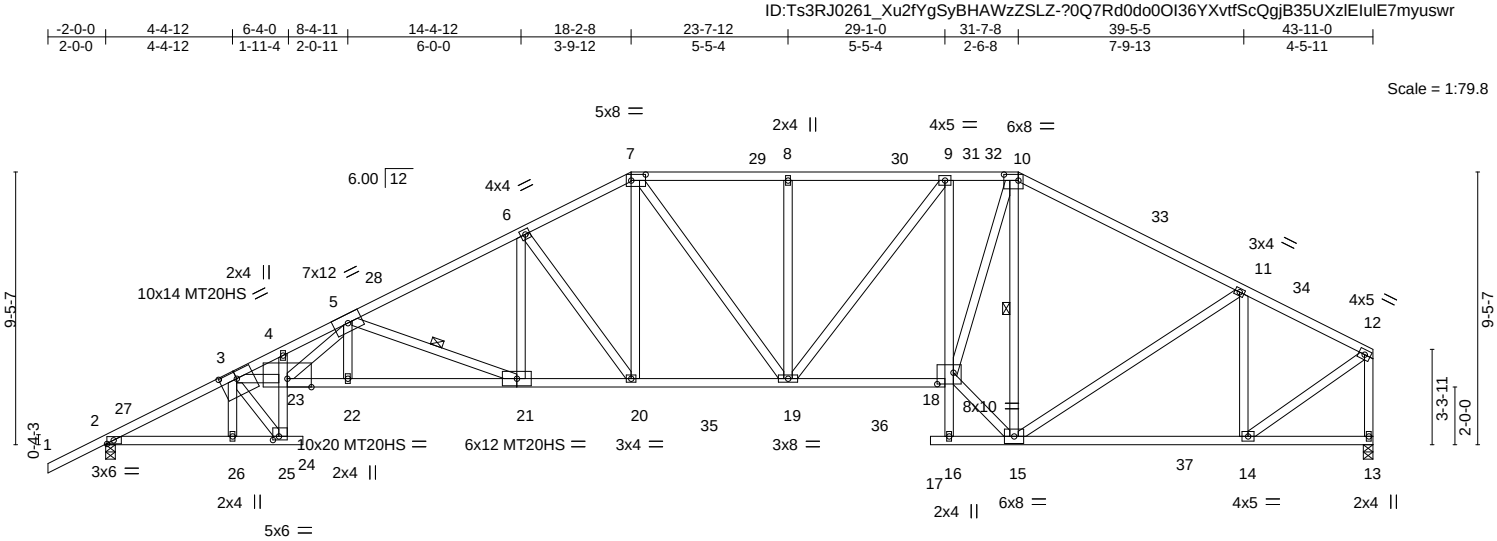

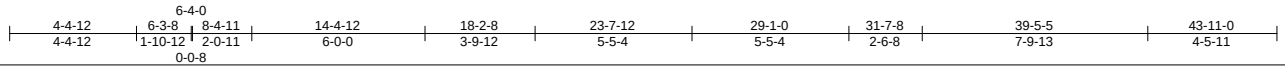

Plate Offsets (X,Y)-- [2:0-2-12,0-1-8], [3:0-7-0,0-3-0], [7:0-6-0,0-2-8], [10:0-6-0,0-2-8], [18:0-6-12,0-4-12], [25:0-2-8,0-1-8]

LOADING (psf)		SPACING- 2-0-0		CSI.		DEFL.	in	(loc)	l/defl	L/d	PLATES	GRIP
TCLL	20.0	Plate Grip DOL	1.25	TC	0.84	Vert(LL)	-0.54	24	>961	360	MT20	244/190
TCDL	10.0	Lumber DOL	1.25	BC	0.91	Vert(CT)	-1.01	21-22	>517	240	MT20HS	187/143
BCLL	0.0 *	Rep Stress Incr	YES	WB	0.92	Horz(CT)	0.62	13	n/a	n/a		
BCDL	10.0	Code FBC2023/TPI2014		Matrix-S		Wind(LL)	0.27	24	>999	240	Weight: 307 lb	FT = 20%

LUMBER-

TOP CHORD 2x4 SP M 31 or 2x4 SP SS *Except*
7-10,1-3: 2x4 SP No.2
BOT CHORD 2x4 SP M 31 or 2x4 SP SS *Except*
9-16,13-17,18-21: 2x4 SP No.2
WEBS 2x4 SP No.2 *Except*
3-23: 2x4 SP M 31 or 2x4 SP SS

BRACING-

TOP CHORD Structural wood sheathing directly applied or 1-6-14 oc purlins, except end verticals.
BOT CHORD Rigid ceiling directly applied or 10-0-0 oc bracing. Except:
6-0-0 oc bracing: 16-18
10-0-0 oc bracing: 23-25
WEBS 1 Row at midpt 5-21, 10-15

REACTIONS. (size) 2=0-4-0, 13=0-4-0
Max Horz 2=138(LC 11)
Max Uplift 2=-127(LC 12), 13=-70(LC 12)
Max Grav 2=2108(LC 17), 13=1978(LC 18)

FORCES. (lb) - Max. Comp./Max. Ten. - All forces 250 (lb) or less except when shown.
TOP CHORD 2-3=-3798/191, 3-4=-9571/571, 4-5=-9640/584, 5-6=-4176/299, 6-7=-3336/288, 7-8=-3033/278, 8-9=-3033/279, 9-10=-2780/261, 10-11=-2242/213, 11-12=-1754/132, 12-13=-1934/142
BOT CHORD 2-26=-211/3393, 25-26=-213/3398, 23-25=-260/4325, 22-23=-368/6146, 21-22=-368/6146, 20-21=-194/3732, 19-20=-118/3003, 18-19=-106/2840, 9-18=-546/83, 14-15=-89/1553
WEBS 3-25=-5056/318, 3-23=-489/8238, 5-23=-219/3696, 5-22=0/326, 5-21=-2576/185, 6-21=-3/1069, 6-20=-1248/128, 7-20=-53/1174, 7-19=-22/328, 8-19=-370/112, 9-19=-29/418, 15-18=-70/2682, 10-18=-122/2765, 10-15=-1919/123, 11-15=0/513, 11-14=-839/150, 12-14=-110/1895

NOTES-

1) Unbalanced roof live loads have been considered for this design.
2) Wind: ASCE 7-22; Vult=130mph (3-second gust) Vasd=101mph; TCDL=4.2psf; BCDL=6.0psf; h=15ft; B=45ft; L=24ft; eave=5ft; Cat. II; Exp B; Encl., GCpi=0.18; MWFRS (directional) and C-C Zone3 -2-0-0 to 1-0-0, Zone1 1-0-0 to 18-2-8, Zone2 18-2-8 to 22-5-7, Zone1 22-5-7 to 31-7-8, Zone2 31-7-8 to 35-10-7, Zone1 35-10-7 to 43-9-4 zone; cantilever left and right exposed ;C-C for members and forces & MWFRS for reactions shown; Lumber DOL=1.60 plate grip DOL=1.60
3) Building Designer / Project engineer responsible for verifying applied roof live load shown covers rain loading requirements specific to the use of this truss component.
4) Provide adequate drainage to prevent water ponding.
5) All plates are MT20 plates unless otherwise indicated.
6) This truss has been designed for a 10.0 psf bottom chord live load nonconcurrent with any other live loads.
7) * This truss has been designed for a live load of 20.0psf on the bottom chord in all areas where a rectangle 3-6-0 tall by 2-0-0 wide will fit between the bottom chord and any other members, with BCDL = 10.0psf.
8) Provide mechanical connection (by others) of truss to bearing plate capable of withstanding 100 lb uplift at joint(s) 13 except (jt=lb) 2=127.

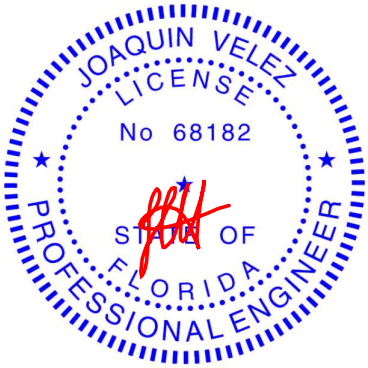

Joaquin Velez PE No.68182
MiTek Inc. DBA MiTek USA FL Cert 6634
16023 Swingley Ridge Rd. Chesterfield, MO 63017
Date:

July 25,2024

MiTek®
16023 Swingley Ridge Rd.
Chesterfield, MO 63017
314.434.1200 / MiTek-US.com

Job	Truss	Truss Type	Qty	Ply	2508-CR-2 Car
6243113	A08	Hip	1	1	T34534208
					Job Reference (optional)

Tibbetts Lumber Co., LLC (Ocala, FL), Ocala, FL - 34472, 8.730 s Jul 11 2024 MiTek Industries, Inc. Wed Jul 24 11:26:48 2024 Page 1

ID:Ts3RJ0261_Xu2fYgSyBHAWzZSLZ-?0Q7Rd0do0OI36YXvtfScQgoV37dX4jEIuIE7myuswr

-2-0-0	6-4-0	12-4-13	20-2-8	24-11-0	29-1-0	29-7-8	33-5-3	39-5-5	43-11-0
2-0-0	6-4-0	6-0-12	7-9-11	4-8-8	4-2-0	0-6-8	3-9-11	6-0-2	4-5-12

Scale = 1:79.6

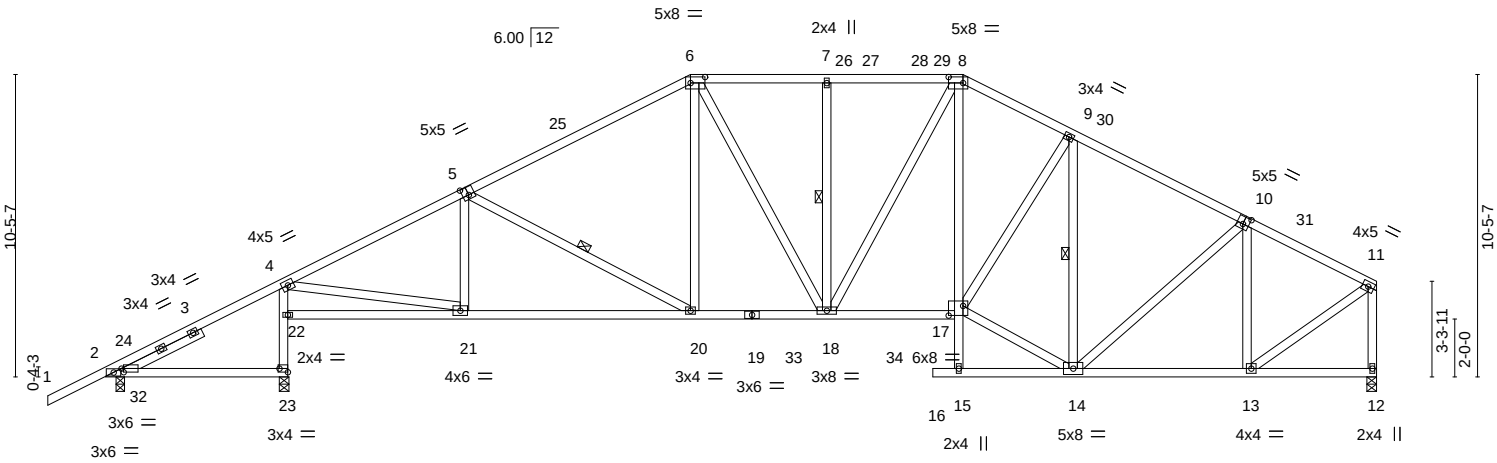

0-4-5	6-2-0	6-4-0 / 6-2-8 / 0-1-8 / 0-0-8	12-4-13	20-2-8	24-11-0	29-1-0	29-7-8	33-5-3	39-5-5	43-11-0
0-4-5	5-9-11	0-1-8	6-0-12	7-9-11	4-8-8	4-2-0	0-6-8	3-9-11	6-0-2	4-5-12

Plate Offsets (X,Y)-- [2:0-0-15,0-1-8], [5:0-2-8,0-3-4], [6:0-6-0,0-2-8], [8:0-6-0,0-2-8], [10:0-2-8,0-3-0], [17:0-6-0,0-4-0], [23:Edge,0-1-8]

LOADING (psf)		SPACING-	2-0-0	CSI.		DEFL.	in	(loc)	l/defl	L/d	PLATES	GRIP
TCLL	20.0	Plate Grip DOL	1.25	TC	0.56	Vert(LL)	-0.17	20-21	>999	360	MT20	244/190
TCDL	10.0	Lumber DOL	1.25	BC	0.78	Vert(CT)	-0.33	20-21	>999	240		
BCLL	0.0 *	Rep Stress Incr	YES	WB	0.47	Horz(CT)	0.11	12	n/a	n/a		
BCDL	10.0	Code FBC2023/TPI2014		Matrix-S		Wind(LL)	0.06	16	>999	240	Weight: 302 lb	FT = 20%

LUMBER-

TOP CHORD 2x4 SP No.2 *Except*
5-6: 2x4 SP M 31 or 2x4 SP SS
BOT CHORD 2x4 SP No.2
WEBS 2x4 SP No.2
SLIDER Left 2x4 SP No.2 3-0-14

BRACING-

TOP CHORD Structural wood sheathing directly applied or 3-4-7 oc purlins, except end verticals.
BOT CHORD Rigid ceiling directly applied or 10-0-0 oc bracing, Except: 4-2-9 oc bracing: 22-23.
WEBS 1 Row at midpt 5-20, 7-18, 9-14

REACTIONS. (size) 2=0-3-8, 23=0-4-0, 12=0-4-0
Max Horz 2=155(LC 11)
Max Uplift 2=-110(LC 12), 23=-137(LC 12), 12=-58(LC 12)
Max Grav 2=357(LC 23), 23=2007(LC 17), 12=1704(LC 18)

FORCES. (lb) - Max. Comp./Max. Ten. - All forces 250 (lb) or less except when shown.
TOP CHORD 4-5=-2432/167, 5-6=-2152/206, 6-7=-1971/227, 7-8=-1971/227, 8-9=-2187/226, 9-10=-1842/180, 10-11=-1484/113, 11-12=-1642/128
BOT CHORD 22-23=-1939/173, 4-22=-1842/203, 20-21=-107/2195, 18-20=-37/1902, 17-18=-34/1917, 13-14=-68/1298
WEBS 4-21=-111/2187, 5-20=-343/79, 6-20=0/427, 6-18=-23/353, 7-18=-312/87, 8-18=-23/265, 8-17=-19/694, 9-17=0/647, 9-14=-939/88, 10-14=0/404, 10-13=-706/115, 11-13=-78/1556, 14-17=-64/1786

NOTES-

1) Unbalanced roof live loads have been considered for this design.
2) Wind: ASCE 7-22; Vult=130mph (3-second gust) Vasd=101mph; TCDL=4.2psf; BCDL=6.0psf; h=15ft; B=45ft; L=24ft; eave=5ft; Cat. II; Exp B; Encl., GCpi=0.18; MWFRS (directional) and C-C Zone3 -2-0-0 to 1-0-0, Zone1 1-0-0 to 20-2-8, Zone2 20-2-8 to 24-5-7, Zone1 24-5-7 to 29-7-8, Zone2 29-7-8 to 33-10-7, Zone1 33-10-7 to 43-9-4 zone; cantilever left and right exposed ; porch left exposed;C-C for members and forces & MWFRS for reactions shown; Lumber DOL=1.60 plate grip DOL=1.60
3) Building Designer / Project engineer responsible for verifying applied roof live load shown covers rain loading requirements specific to the use of this truss component.
4) Provide adequate drainage to prevent water ponding.
5) This truss has been designed for a 10.0 psf bottom chord live load nonconcurrent with any other live loads.
6) * This truss has been designed for a live load of 20.0psf on the bottom chord in all areas where a rectangle 3-6-0 tall by 2-0-0 wide will fit between the bottom chord and any other members, with BCDL = 10.0psf.
7) Provide mechanical connection (by others) of truss to bearing plate capable of withstanding 100 lb uplift at joint(s) 12 except (jt=lb) 2=110, 23=137.

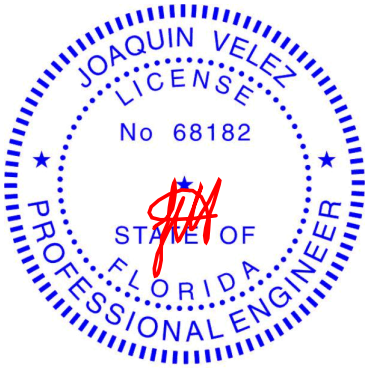

Joaquin Velez PE No.68182
MiTek Inc. DBA MiTek USA FL Cert 6634
16023 Swingley Ridge Rd. Chesterfield, MO 63017

Date:

July 25,2024

Job	Truss	Truss Type	Qty	Ply	2508-CR-2 Car
6243113	A09	Hip	1	1	T34534209
					Job Reference (optional)

Tibbetts Lumber Co., LLC (Ocala, FL), Ocala, FL - 34472, 8.730 s Jul 11 2024 MiTek Industries, Inc. Wed Jul 24 11:26:49 2024 Page 1

ID:Ts3RJ0261_Xu2fYgSyBHAWzZSLZ-TC_Wfz1GZKW9hG7kTbAh8eCzFTTsGWzNXYVnfCyuswq

-2-0-0	6-4-0	12-4-13	20-2-8	24-11-0	29-1-0	29-7-8	33-5-3	39-5-5	43-11-0
2-0-0	6-4-0	6-0-12	7-9-11	4-8-8	4-2-0	0-6-8	3-9-11	6-0-2	4-5-12

Scale = 1:79.6

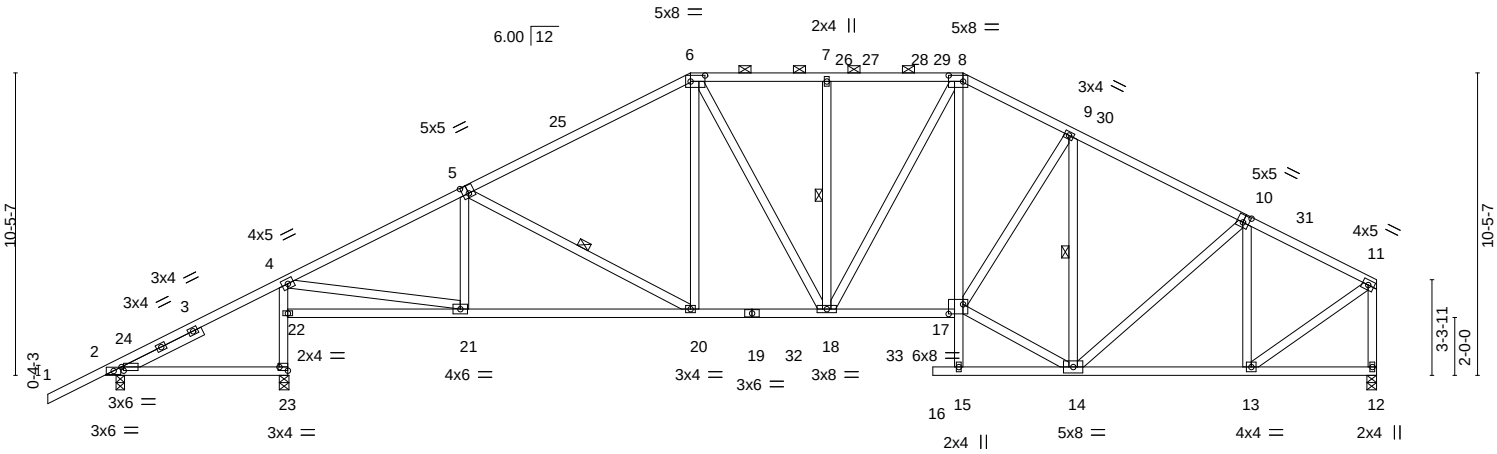

0-4-5	6-2-0	6-4-0 / 6-2-8	12-4-13	20-2-8	24-11-0	29-1-0	29-7-8	33-5-3	39-5-5	43-11-0
0-4-5	5-9-11	0-1-8 / 0-0-8	6-0-12	7-9-11	4-8-8	4-2-0	0-6-8	3-9-11	6-0-2	4-5-12

Plate Offsets (X,Y)-- [2:0-0-15,0-1-8], [5:0-2-8,0-3-4], [6:0-6-0,0-2-8], [8:0-6-0,0-2-8], [10:0-2-8,0-3-0], [17:0-6-0,0-4-0], [23:Edge,0-1-8]

LOADING (psf)			SPACING-	2-0-0	CSI.		DEFL.	in	(loc)	l/defl	L/d	PLATES	GRIP
TCLL	20.0		Plate Grip DOL	1.25	TC	0.56	Vert(LL)	-0.17	20-21	>999	360	MT20	244/190
TCDL	10.0		Lumber DOL	1.25	BC	0.78	Vert(CT)	-0.33	20-21	>999	240		
BCLL	0.0	*	Rep Stress Incr	YES	WB	0.47	Horz(CT)	0.11	12	n/a	n/a		
BCDL	10.0		Code FBC2023/TPI2014		Matrix-S		Wind(LL)	0.06	16	>999	240	Weight: 302 lb	FT = 20%

LUMBER-

TOP CHORD 2x4 SP No.2 *Except*
5-6: 2x4 SP M 31 or 2x4 SP SS
BOT CHORD 2x4 SP No.2
WEBS 2x4 SP No.2
SLIDER Left 2x4 SP No.2 3-0-14

BRACING-

TOP CHORD Structural wood sheathing directly applied or 3-4-7 oc purlins, except end verticals, and 2-0-0 oc purlins (4-0-1 max.): 6-8.
BOT CHORD Rigid ceiling directly applied or 10-0-0 oc bracing, Except: 4-2-2 oc bracing: 22-23.
WEBS 1 Row at midpt 5-20, 7-18, 9-14

REACTIONS. (size) 2=0-3-8, 23=0-4-0, 12=0-4-0
Max Horz 2=155(LC 11)
Max Uplift 2=-56(LC 12), 23=-88(LC 12), 12=-58(LC 12)
Max Grav 2=357(LC 23), 23=2044(LC 17), 12=1704(LC 18)

FORCES. (lb) - Max. Comp./Max. Ten. - All forces 250 (lb) or less except when shown.
TOP CHORD 4-5=-2434/162, 5-6=-2153/204, 6-7=-1971/226, 7-8=-1971/226, 8-9=-2187/225, 9-10=-1843/179, 10-11=-1484/113, 11-12=-1643/127
BOT CHORD 22-23=-1938/176, 4-22=-1841/205, 20-21=-103/2197, 18-20=-35/1903, 17-18=-33/1917, 13-14=-68/1298
WEBS 4-21=-128/2178, 5-20=-344/76, 6-20=0/428, 6-18=-24/353, 7-18=-312/88, 8-18=-22/265, 8-17=-19/694, 9-17=0/647, 9-14=-939/87, 10-14=0/404, 10-13=-706/115, 11-13=-77/1557, 14-17=-63/1786

NOTES-

1) Unbalanced roof live loads have been considered for this design.
2) Wind: ASCE 7-22; Vult=130mph (3-second gust) Vasd=101mph; TCDL=4.2psf; BCDL=6.0psf; h=15ft; B=45ft; L=24ft; eave=5ft; Cat. II; Exp B; Encl., GCpi=0.18; MWFRS (directional) and C-C Zone3 -2-0-0 to 1-0-0, Zone1 1-0-0 to 20-2-8, Zone2 20-2-8 to 24-5-7, Zone1 24-5-7 to 29-7-8, Zone2 29-7-8 to 33-10-7, Zone1 33-10-7 to 43-9-4 zone; cantilever left and right exposed ;C-C for members and forces & MWFRS for reactions shown; Lumber DOL=1.60 plate grip DOL=1.60
3) Building Designer / Project engineer responsible for verifying applied roof live load shown covers rain loading requirements specific to the use of this truss component.
4) Provide adequate drainage to prevent water ponding.
5) This truss has been designed for a 10.0 psf bottom chord live load nonconcurrent with any other live loads.
6) * This truss has been designed for a live load of 20.0psf on the bottom chord in all areas where a rectangle 3-6-0 tall by 2-0-0 wide will fit between the bottom chord and any other members, with BCDL = 10.0psf.
7) Provide mechanical connection (by others) of truss to bearing plate capable of withstanding 100 lb uplift at joint(s) 2, 23, 12.
8) Graphical purlin representation does not depict the size or the orientation of the purlin along the top and/or bottom chord.

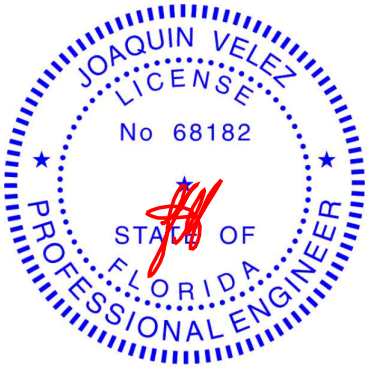

Joaquin Velez PE No.68182
MiTek Inc. DBA MiTek USA FL Cert 6634
16023 Swingley Ridge Rd. Chesterfield, MO 63017

Date:

July 25,2024

Job	Truss	Truss Type	Qty	Ply	2508-CR-2 Car
6243113	A10	Piggyback Base	1	1	T34534210 Job Reference (optional)

Tibbetts Lumber Co., LLC (Ocala, FL), Ocala, FL - 34472, 8.730 s Jul 11 2024 MiTek Industries, Inc. Wed Jul 24 11:26:50 2024 Page 1

ID:Ts3RJ0261_Xu2fYgSyBHAWzZSLZ-xPXusJ2uKde0JQiw1Ihwhrl7etoO?vNXmCEKCeyuswp

-2-0-0	7-3-3	10-4-12	14-4-13	20-2-8	24-11-0	29-7-8	35-5-3	39-5-4	45-10-0	47-10-0
2-0-0	7-3-3	3-1-10	4-0-0	5-9-11	4-8-8	4-8-8	5-9-11	4-0-1	6-4-12	2-0-0

Scale = 1:85.3

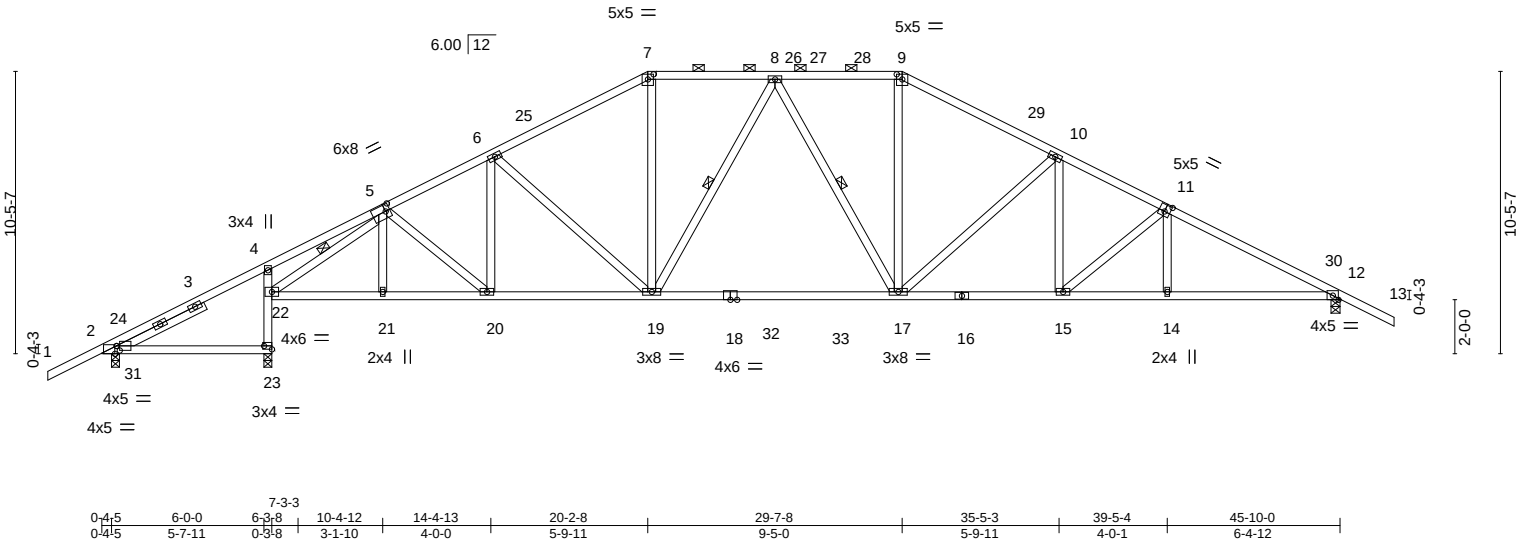

0-4-5	6-0-0	7-3-3 / 6-3-8	10-4-12	14-4-13	20-2-8	29-7-8	35-5-3	39-5-4	45-10-0
0-4-5	5-7-11	0-11-11 / 0-3-8	3-1-10	4-0-0	5-9-11	9-5-0	5-9-11	4-0-1	6-4-12

Plate Offsets (X,Y)-- [2:0-1-7,0-2-0], [2:0-0-12,Edge], [5:0-2-0,0-3-0], [7:0-2-8,0-2-4], [9:0-2-8,0-2-4], [11:0-2-8,0-3-0], [23:Edge,0-1-8]

LOADING (psf)		SPACING-	2-0-0	CSI.		DEFL.	in	(loc)	l/defl	L/d	PLATES	GRIP
TCLL	20.0	Plate Grip DOL	1.25	TC	0.58	Vert(LL)	-0.31	17-19	>999	360	MT20	244/190
TCDL	10.0	Lumber DOL	1.25	BC	0.89	Vert(CT)	-0.55	17-19	>857	240		
BCLL	0.0 *	Rep Stress Incr	YES	WB	0.72	Horz(CT)	0.12	12	n/a	n/a		
BCDL	10.0	Code FBC2023/TPI2014		Matrix-S		Wind(LL)	0.08	17	>999	240	Weight: 277 lb	FT = 20%

LUMBER-

TOP CHORD 2x4 SP No.2
BOT CHORD 2x4 SP No.2 *Except*
18-22,16-18: 2x4 SP M 31 or 2x4 SP SS
WEBS 2x4 SP No.2
SLIDER Left 2x4 SP No.2 3-7-5

BRACING-

TOP CHORD Structural wood sheathing directly applied or 2-9-6 oc purlins, except 2-0-0 oc purlins (3-11-12 max.): 7-9.
BOT CHORD Rigid ceiling directly applied or 10-0-0 oc bracing, Except:
6-0-0 oc bracing: 2-23
4-1-2 oc bracing: 22-23.
WEBS 1 Row at midpt 8-19, 8-17, 5-22

REACTIONS. (size) 2=0-3-8, 23=0-3-8, 12=0-4-0
Max Horz 2=167(LC 11)
Max Uplift 2=-140(LC 12), 23=-112(LC 12), 12=-132(LC 12)
Max Grav 2=353(LC 23), 23=2080(LC 17), 12=1880(LC 18)

FORCES. (lb) - Max. Comp./Max. Ten. - All forces 250 (lb) or less except when shown.
TOP CHORD 5-6=-2436/215, 6-7=-2252/228, 7-8=-1966/231, 8-9=-2093/239, 9-10=-2384/232, 10-11=-2898/241, 11-12=-3315/211
BOT CHORD 22-23=-2014/149, 4-22=-378/118, 21-22=-59/2061, 20-21=-59/2060, 19-20=-54/2246, 17-19=-26/2119, 15-17=-86/2524, 14-15=-116/2864, 12-14=-115/2866
WEBS 6-19=-310/89, 7-19=-4/736, 8-19=-384/60, 9-17=-3/769, 10-17=-662/105, 10-15=0/393, 11-15=-439/39, 5-22=-2552/90

NOTES-

1) Unbalanced roof live loads have been considered for this design.
2) Wind: ASCE 7-22; Vult=130mph (3-second gust) Vasd=101mph; TCDL=4.2psf; BCDL=6.0psf; h=15ft; B=45ft; L=24ft; eave=6ft; Cat. II; Exp B; Encl., GCpi=0.18; MWFRS (directional) and C-C Zone3 -2-0-0 to 1-0-0, Zone1 1-0-0 to 20-2-8, Zone2 20-2-8 to 24-5-7, Zone1 24-5-7 to 29-7-8, Zone2 29-7-8 to 33-10-7, Zone1 33-10-7 to 47-10-0 zone; cantilever left and right exposed ; porch left exposed;C-C for members and forces & MWFRS for reactions shown; Lumber DOL=1.60 plate grip DOL=1.60
3) Building Designer / Project engineer responsible for verifying applied roof live load shown covers rain loading requirements specific to the use of this truss component.
4) Provide adequate drainage to prevent water ponding.
5) All plates are 3x6 MT20 unless otherwise indicated.
6) This truss has been designed for a 10.0 psf bottom chord live load nonconcurrent with any other live loads.
7) * This truss has been designed for a live load of 20.0psf on the bottom chord in all areas where a rectangle 3-6-0 tall by 2-0-0 wide will fit between the bottom chord and any other members, with BCDL = 10.0psf.
8) Provide mechanical connection (by others) of truss to bearing plate capable of withstanding 100 lb uplift at joint(s) except (jt=lb) 2=140, 23=112, 12=132.
9) Graphical purlin representation does not depict the size or the orientation of the purlin along the top and/or bottom chord.

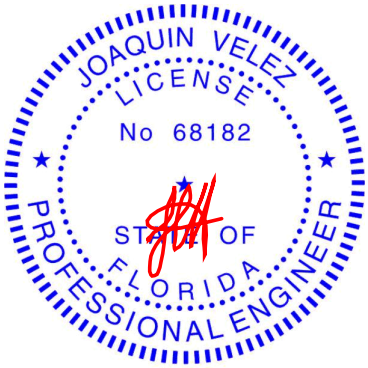

Joaquin Velez PE No.68182
MiTek Inc. DBA MiTek USA FL Cert 6634
16023 Swingley Ridge Rd. Chesterfield, MO 63017
Date:

July 25,2024

Job	Truss	Truss Type	Qty	Ply	2508-CR-2 Car
6243113	A11	Piggyback Base	4	1	T34534211 Job Reference (optional)

Tibbetts Lumber Co., LLC (Ocala, FL), Ocala, FL - 34472, 8.730 s Jul 11 2024 MiTek Industries, Inc. Wed Jul 24 11:26:50 2024 Page 1

ID:Ts3RJ0261_Xu2fYgSyBHAWzZSLZ-xPXusJ2uKde0JQiw1lhwhrl8Wtmn?vLXmCEKCeyuswp

-2-0-0	6-4-12	9-1-0	14-4-13	20-2-8	24-11-0	29-7-8	35-5-3	39-5-4	45-10-0	47-10-0
2-0-0	6-4-12	2-8-4	5-3-12	5-9-11	4-8-8	4-8-8	5-9-11	4-0-1	6-4-12	2-0-0

Scale = 1:85.3

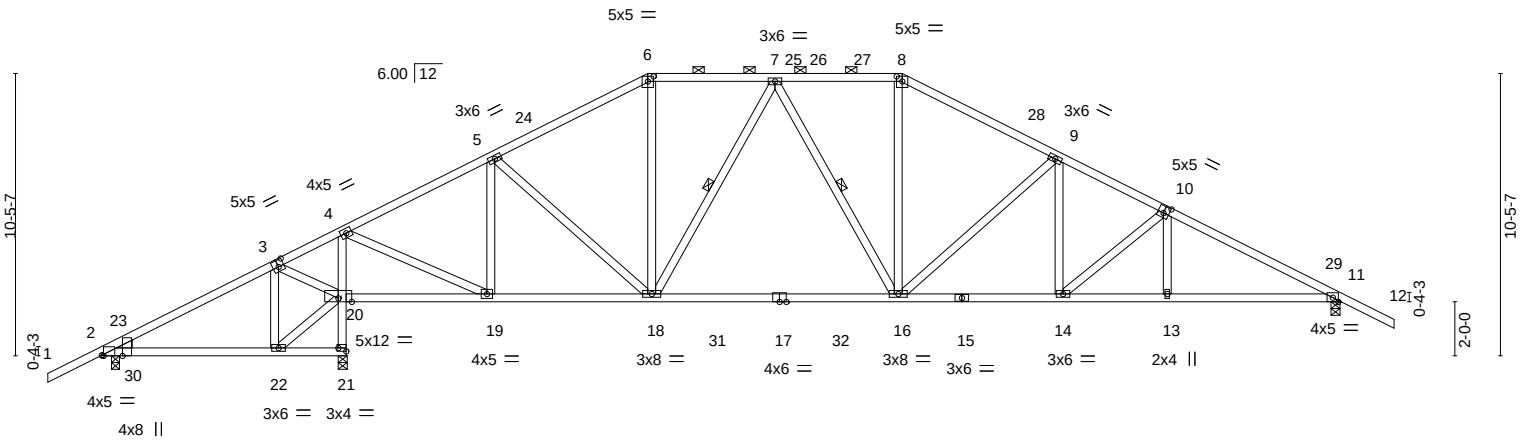

0-4-5	4-9-12	8-11-0	9-1-0 / 9-0-8	14-4-13	20-2-8	29-7-8	35-5-3	39-5-4	45-10-0
0-4-5	4-5-7	4-1-4	0-1-8 / 0-0-8	5-3-12	5-9-11	9-5-0	5-9-11	4-0-1	6-4-12

Plate Offsets (X,Y)-- [2:0-0-4,Edge], [2:0-0-12,Edge], [3:0-2-8,0-3-0], [6:0-2-8,0-2-4], [8:0-2-8,0-2-4], [10:0-2-8,0-3-0], [21:Edge,0-1-8]

LOADING (psf)		SPACING-	2-0-0	CSI.		DEFL.	in	(loc)	l/defl	L/d	PLATES	GRIP
TCLL	20.0	Plate Grip DOL	1.25	TC	0.53	Vert(LL)	-0.32	16-18	>999	360	MT20	244/190
TCDL	10.0	Lumber DOL	1.25	BC	0.99	Vert(CT)	-0.56	16-18	>791	240		
BCLL	0.0 *	Rep Stress Incr	YES	WB	0.72	Horz(CT)	0.09	11	n/a	n/a		
BCDL	10.0	Code FBC2023/TPI2014		Matrix-S		Wind(LL)	0.07	14-16	>999	240	Weight: 277 lb	FT = 20%

LUMBER-
TOP CHORD 2x4 SP No.2
BOT CHORD 2x4 SP No.2
WEBS 2x4 SP No.2
WEDGE
Left: 2x4 SP No.2

BRACING-
TOP CHORD Structural wood sheathing directly applied or 2-11-15 oc purlins, except
2-0-0 oc purlins (4-4-7 max.): 6-8.
BOT CHORD Rigid ceiling directly applied or 2-2-0 oc bracing.
WEBS 1 Row at midpt 7-18, 7-16

REACTIONS. (size) 2=0-3-8, 21=0-4-0, 11=0-4-0
Max Horz 2=167(LC 11)
Max Uplift 2=-155(LC 12), 21=-150(LC 12), 11=-126(LC 12)
Max Grav 2=327(LC 23), 21=2281(LC 17), 11=1716(LC 18)

FORCES. (lb) - Max. Comp./Max. Ten. - All forces 250 (lb) or less except when shown.
TOP CHORD 2-3=0/376, 3-4=-45/938, 4-5=-1351/133, 5-6=-1674/190, 6-7=-1442/196, 7-8=-1767/216, 8-9=-2023/207, 9-10=-2539/216, 10-11=-2961/186
BOT CHORD 2-22=-255/0, 20-21=-2290/241, 4-20=-2027/165, 19-20=-801/116, 18-19=0/1238, 16-18=0/1687, 14-16=-63/2203, 13-14=-94/2546, 11-13=-93/2552
WEBS 3-22=-43/378, 20-22=-306/0, 3-20=-695/187, 4-19=-111/2120, 5-19=-701/109, 5-18=0/438, 6-18=0/487, 7-18=-520/74, 8-16=0/605, 9-16=-665/106, 9-14=0/398, 10-14=-447/40

NOTES-
1) Unbalanced roof live loads have been considered for this design.
2) Wind: ASCE 7-22; Vult=130mph (3-second gust) Vasd=101mph; TCDL=4.2psf; BCDL=6.0psf; h=15ft; B=45ft; L=24ft; eave=6ft; Cat. II; Exp B; Encl., GCpi=0.18; MWFRS (directional) and C-C Zone3 -2-0-0 to 1-0-0, Zone1 1-0-0 to 20-2-8, Zone2 20-2-8 to 24-5-7, Zone1 24-5-7 to 29-7-8, Zone2 29-7-8 to 33-10-7, Zone1 33-10-7 to 47-10-0 zone; cantilever left and right exposed ; porch left exposed;C-C for members and forces & MWFRS for reactions shown; Lumber DOL=1.60 plate grip DOL=1.60
3) Building Designer / Project engineer responsible for verifying applied roof live load shown covers rain loading requirements specific to the use of this truss component.
4) Provide adequate drainage to prevent water ponding.
5) This truss has been designed for a 10.0 psf bottom chord live load nonconcurrent with any other live loads.
6) * This truss has been designed for a live load of 20.0psf on the bottom chord in all areas where a rectangle 3-6-0 tall by 2-0-0 wide will fit between the bottom chord and any other members, with BCDL = 10.0psf.
7) Provide mechanical connection (by others) of truss to bearing plate capable of withstanding 100 lb uplift at joint(s) except (jt=lb) 2=155, 21=150, 11=126.
8) Graphical purlin representation does not depict the size or the orientation of the purlin along the top and/or bottom chord.

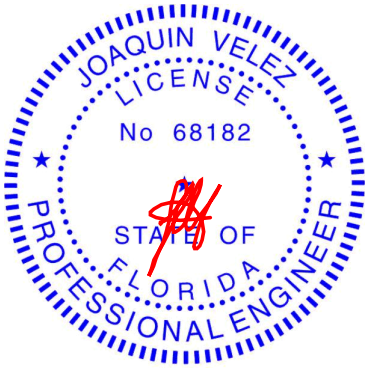

Joaquin Velez PE No.68182
MiTek Inc. DBA MiTek USA FL Cert 6634
16023 Swingley Ridge Rd. Chesterfield, MO 63017
Date:

July 25,2024

MiTek®
16023 Swingley Ridge Rd.
Chesterfield, MO 63017
314.434.1200 / MiTek-US.com

Job	Truss	Truss Type	Qty	Ply	2508-CR-2 Car
6243113	A11A	Piggyback Base	1	1	T34534212 Job Reference (optional)

Tibbetts Lumber Co., LLC (Ocala, FL), Ocala, FL - 34472, 8.730 s Jul 11 2024 MiTek Industries, Inc. Wed Jul 24 11:26:51 2024 Page 1
ID:Ts3RJ0261_Xu2fYgSyBHAWzZSLZ-Qb5G3e3W5xmtwaH6b0D9D3IIuH77kMfg_s_uk5yuswo

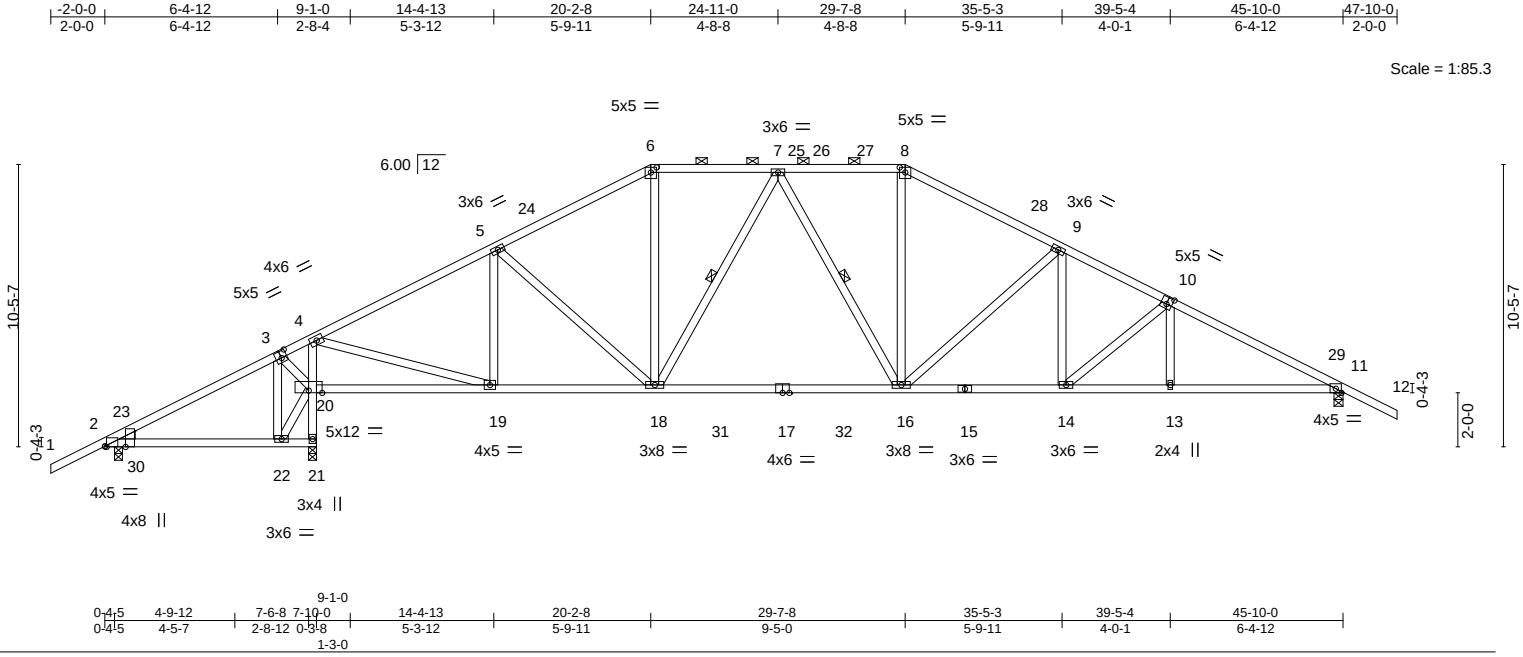

Plate Offsets (X,Y)-- [2:0-0-4,Edge], [2:0-0-12,Edge], [3:0-2-8,0-3-0], [6:0-2-8,0-2-4], [8:0-2-8,0-2-4], [10:0-2-8,0-3-0]

LOADING (psf)		SPACING- 2-0-0		CSI.		DEFL.	in	(loc)	l/defl	L/d	PLATES	GRIP
TCLL	20.0	Plate Grip DOL	1.25	TC	0.55	Vert(LL)	-0.32	16-18	>999	360	MT20	244/190
TCDL	10.0	Lumber DOL	1.25	BC	0.92	Vert(CT)	-0.56	16-18	>816	240		
BCLL	0.0 *	Rep Stress Incr	YES	WB	0.71	Horz(CT)	0.10	11	n/a	n/a		
BCDL	10.0	Code FBC2023/TPI2014		Matrix-S		Wind(LL)	0.07	16	>999	240	Weight: 275 lb	FT = 20%

LUMBER-
TOP CHORD 2x4 SP No.2
BOT CHORD 2x4 SP No.2 *Except*
15-17: 2x4 SP M 31 or 2x4 SP SS
WEBS 2x4 SP No.2
WEDGE
Left: 2x4 SP No.2

BRACING-
TOP CHORD Structural wood sheathing directly applied or 2-10-11 oc purlins, except
2-0-0 oc purlins (4-2-3 max.): 6-8.
BOT CHORD Rigid ceiling directly applied or 2-2-0 oc bracing.
WEBS 1 Row at midpt 7-18, 7-16

REACTIONS. (size) 2=0-3-8, 21=0-3-8, 11=0-4-0
Max Horz 2=167(LC 11)
Max Uplift 2=-146(LC 12), 21=-135(LC 12), 11=-128(LC 12)
Max Grav 2=326(LC 23), 21=2208(LC 17), 11=1789(LC 18)

FORCES. (lb) - Max. Comp./Max. Ten. - All forces 250 (lb) or less except when shown.
TOP CHORD 2-3=-33/341, 3-4=-14/686, 4-5=-1879/162, 5-6=-1931/208, 6-7=-1672/212, 7-8=-1914/225, 8-9=-2186/217, 9-10=-2698/227, 10-11=-3119/197
BOT CHORD 20-21=-2262/248, 4-20=-1878/150, 19-20=-539/78, 18-19=-15/1700, 16-18=-9/1879, 14-16=-73/2345, 13-14=-104/2686, 11-13=-102/2691
WEBS 3-22=-64/438, 20-22=-307/0, 3-20=-637/169, 4-19=-96/2227, 5-19=-425/101, 6-18=-0/602, 7-18=-461/67, 8-16=0/679, 9-16=-660/107, 9-14=0/393, 10-14=-444/40

NOTES-
1) Unbalanced roof live loads have been considered for this design.
2) Wind: ASCE 7-22; Vult=130mph (3-second gust) Vasd=101mph; TCDL=4.2psf; BCDL=6.0psf; h=15ft; B=45ft; L=24ft; eave=6ft; Cat. II; Exp B; Encl., GCpi=0.18; MWFRS (directional) and C-C Zone3 -2-0-0 to 1-0-0, Zone1 1-0-0 to 20-2-8, Zone2 20-2-8 to 24-5-7, Zone1 24-5-7 to 29-7-8, Zone2 29-7-8 to 33-10-7, Zone1 33-10-7 to 47-10-0 zone; cantilever left and right exposed ; porch left exposed;C-C for members and forces & MWFRS for reactions shown; Lumber DOL=1.60 plate grip DOL=1.60
3) Building Designer / Project engineer responsible for verifying applied roof live load shown covers rain loading requirements specific to the use of this truss component.
4) Provide adequate drainage to prevent water ponding.
5) This truss has been designed for a 10.0 psf bottom chord live load nonconcurrent with any other live loads.
6) * This truss has been designed for a live load of 20.0psf on the bottom chord in all areas where a rectangle 3-6-0 tall by 2-0-0 wide will fit between the bottom chord and any other members, with BCDL = 10.0psf.
7) Provide mechanical connection (by others) of truss to bearing plate capable of withstanding 100 lb uplift at joint(s) except (jt=lb) 2=146, 21=135, 11=128.
8) Graphical purlin representation does not depict the size or the orientation of the purlin along the top and/or bottom chord.

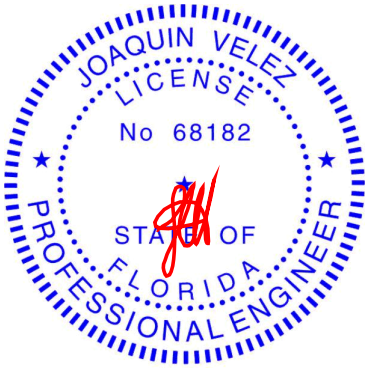

Joaquin Velez PE No.68182
MiTek Inc. DBA MiTek USA FL Cert 6634
16023 Swingley Ridge Rd. Chesterfield, MO 63017
Date:
July 25,2024

Job	Truss	Truss Type	Qty	Ply	2508-CR-2 Car
6243113	A12	Hip	1	1	T34534213
					Job Reference (optional)

Tibbetts Lumber Co., LLC (Ocala, FL), Ocala, FL - 34472, 8.730 s Jul 11 2024 MiTek Industries, Inc. Wed Jul 24 11:26:52 2024 Page 1

ID:Ts3RJ0261_Xu2fYgSyBHAWzZSLZ-unfeH_48sFukYkrJ8jkOmGqTyhVJStzpDWjRGXyuswn

-2-0-0	6-4-12	9-1-0	14-4-11	21-0-0	28-10-0	35-5-4	39-5-4	45-2-0
2-0-0	6-4-12	2-8-4	5-3-11	6-7-5	7-10-0	6-7-4	4-0-0	5-8-12

Scale = 1:83.2

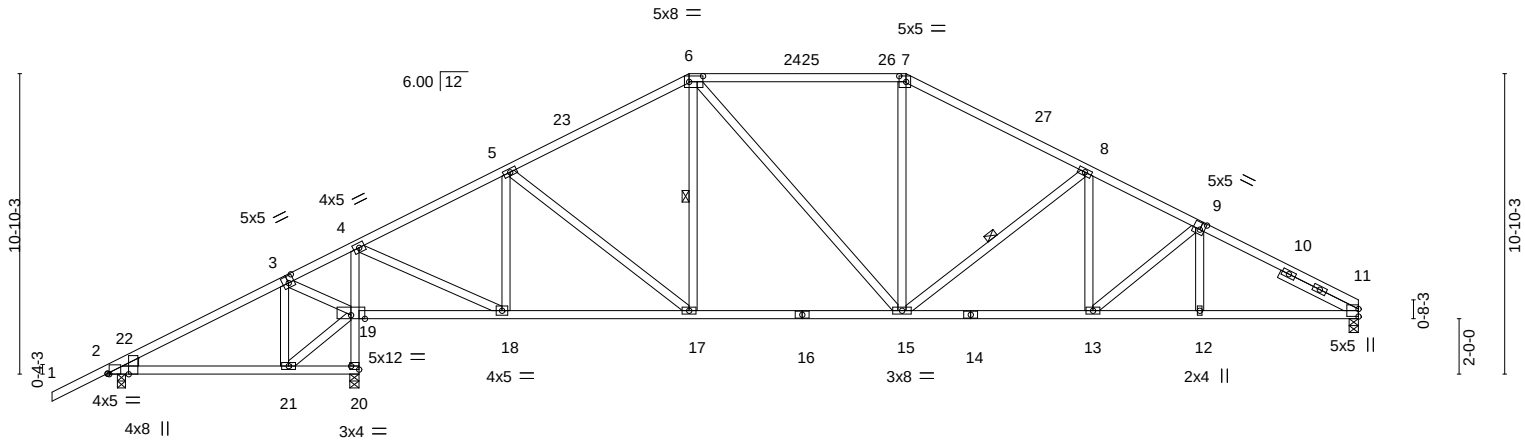

0-4-5	4-9-12	8-11-0	9-1-0	14-4-11	21-0-0	28-10-0	35-5-4	39-5-4	45-2-0
0-4-5	4-5-7	4-1-4	0-2-0	5-3-11	6-7-5	7-10-0	6-7-4	4-0-0	5-8-12

Plate Offsets (X,Y)-- [2:0-0-4,Edge], [2:0-0-12,Edge], [3:0-2-8,0-3-0], [6:0-6-0,0-2-8], [7:0-3-0,0-2-8], [9:0-2-0,0-3-0], [20:Edge,0-1-8]

LOADING (psf)		**SPACING-** 2-0-0	**CSI.**		**DEFL.** in (loc) l/defl L/d	**PLATES**	**GRIP**
TCLL	20.0	Plate Grip DOL 1.25	TC	0.53	Vert(LL) -0.18 15-17 >999 360	MT20	244/190
TCDL	10.0	Lumber DOL 1.25	BC	0.79	Vert(CT) -0.31 15-17 >999 240		
BCLL	0.0 *	Rep Stress Incr YES	WB	0.45	Horz(CT) 0.08 11 n/a n/a		
BCDL	10.0	Code FBC2023/TPI2014	Matrix-S		Wind(LL) 0.06 13-15 >999 240	Weight: 269 lb	FT = 20%

LUMBER-

TOP CHORD 2x4 SP No.2 *Except*
6-7: 2x4 SP M 31 or 2x4 SP SS
BOT CHORD 2x4 SP No.2
WEBS 2x4 SP No.2
WEDGE
Left: 2x4 SP No.2
SLIDER Right 2x4 SP No.2 3-1-13

BRACING-

TOP CHORD Structural wood sheathing directly applied or 3-0-0 oc purlins.
BOT CHORD Rigid ceiling directly applied or 3-10-11 oc bracing.
WEBS 1 Row at midpt 6-17, 8-15

REACTIONS. (size) 2=0-3-8, 20=0-4-0, 11=0-4-0
Max Horz 2=170(LC 11)
Max Uplift 2=-76(LC 12), 20=-79(LC 12), 11=-62(LC 12)
Max Grav 2=350(LC 23), 20=2283(LC 17), 11=1572(LC 18)

FORCES. (lb) - Max. Comp./Max. Ten. - All forces 250 (lb) or less except when shown.

TOP CHORD 2-3=-63/262, 3-4=-17/833, 4-5=-1368/145, 5-6=-1656/203, 6-7=-1646/227, 7-8=-1899/215, 8-9=-2424/215, 9-11=-2740/195
BOT CHORD 19-20=-2292/138, 4-19=-1959/144, 18-19=-700/58, 17-18=-30/1249, 15-17=0/1461, 13-15=-85/2133, 12-13=-112/2316, 11-12=-113/2313
WEBS 3-21=0/331, 3-19=-651/68, 4-18=-96/2048, 5-18=-641/117, 5-17=0/374, 6-15=-26/394, 7-15=0/448, 8-15=-691/102, 8-13=0/323

NOTES-

1) Unbalanced roof live loads have been considered for this design.
2) Wind: ASCE 7-22; Vult=130mph (3-second gust) Vasd=101mph; TCDL=4.2psf; BCDL=6.0psf; h=15ft; B=45ft; L=24ft; eave=6ft; Cat. II; Exp B; Encl., GCpi=0.18; MWFRS (directional) and C-C Zone3 -2-0-0 to 1-0-0, Zone1 1-0-0 to 21-0-0, Zone2 21-0-0 to 25-2-15, Zone1 25-2-15 to 28-10-0, Zone2 28-10-0 to 33-0-15, Zone1 33-0-15 to 45-2-0 zone; cantilever left and right exposed ;C-C for members and forces & MWFRS for reactions shown; Lumber DOL=1.60 plate grip DOL=1.60
3) Building Designer / Project engineer responsible for verifying applied roof live load shown covers rain loading requirements specific to the use of this truss component.
4) Provide adequate drainage to prevent water ponding.
5) All plates are 3x6 MT20 unless otherwise indicated.
6) This truss has been designed for a 10.0 psf bottom chord live load nonconcurrent with any other live loads.
7) * This truss has been designed for a live load of 20.0psf on the bottom chord in all areas where a rectangle 3-6-0 tall by 2-0-0 wide will fit between the bottom chord and any other members, with BCDL = 10.0psf.
8) Provide mechanical connection (by others) of truss to bearing plate capable of withstanding 100 lb uplift at joint(s) 2, 20, 11.

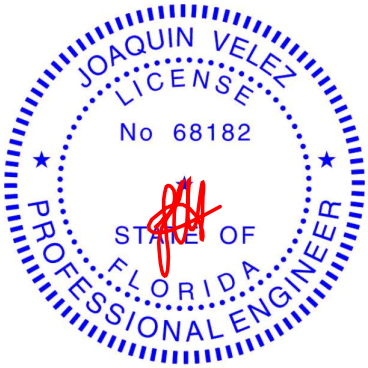

Joaquin Velez PE No.68182
MiTek Inc. DBA MiTek USA FL Cert 6634
16023 Swingley Ridge Rd. Chesterfield, MO 63017

Date:

July 25,2024

Job	Truss	Truss Type	Qty	Ply	2508-CR-2 Car
6243113	A13	Hip	1	1	T34534214
					Job Reference (optional)

Tibbetts Lumber Co., LLC (Ocala, FL), Ocala, FL - 34472, 8.730 s Jul 11 2024 MiTek Industries, Inc. Wed Jul 24 11:26:53 2024 Page 1

ID:Ts3RJ0261_Xu2fYgSyBHAWzZSLZ-M_D0UK4mdY0bAtQViQFdJUNeF4tbBKtzSAT_ozyuswm

-2-0-0	6-4-12	9-1-0	14-5-11	19-0-0	24-11-0	30-10-0	35-5-4	39-5-4	45-2-0
2-0-0	6-4-12	2-8-4	5-4-10	4-6-5	5-11-0	5-11-0	4-7-4	4-0-1	5-8-12

Scale = 1:83.2

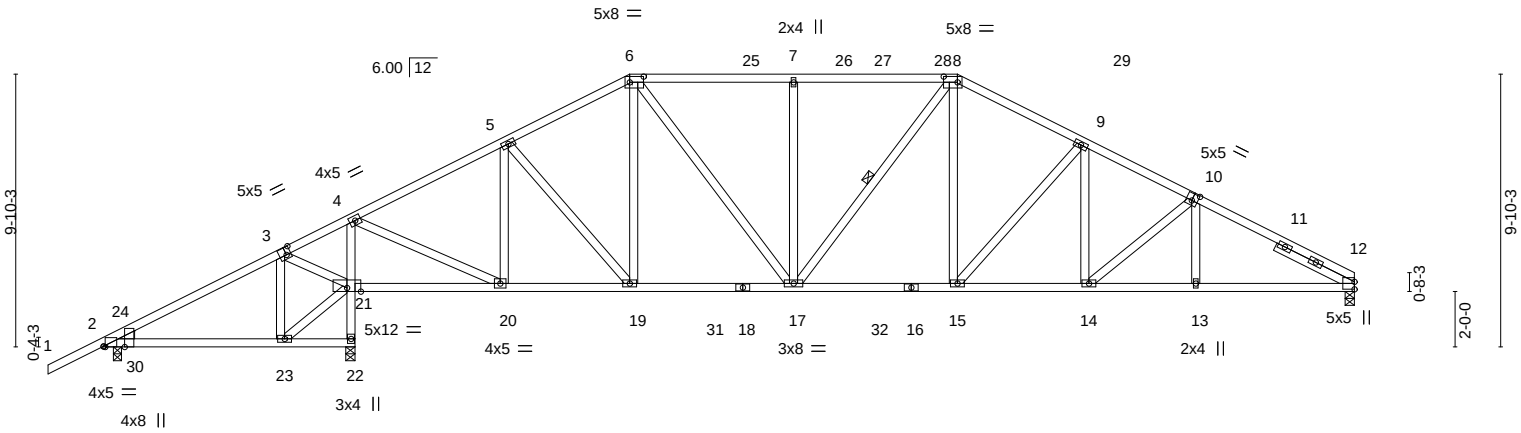

0-4-5	4-9-12	8-11-0	9-1-0	14-5-11	19-0-0	24-11-0	30-10-0	35-5-4	39-5-4	45-2-0
0-4-5	4-5-7	4-1-4	0-2-0	5-4-10	4-6-5	5-11-0	5-11-0	4-7-4	4-0-1	5-8-12

Plate Offsets (X,Y)-- [2:0-0-12,Edge], [2:0-0-4,Edge], [3:0-2-0,0-3-4], [6:0-6-0,0-2-8], [8:0-6-0,0-2-8], [10:0-2-8,0-3-0]

LOADING (psf)		**SPACING-** 2-0-0	**CSI.**		**DEFL.** in (loc) l/defl L/d	**PLATES**	**GRIP**
TCLL	20.0	Plate Grip DOL 1.25	TC	0.56	Vert(LL) -0.14 15-17 >999 360	MT20	244/190
TCDL	10.0	Lumber DOL 1.25	BC	0.66	Vert(CT) -0.26 15-17 >999 240		
BCLL	0.0 *	Rep Stress Incr YES	WB	0.47	Horz(CT) 0.08 12 n/a n/a		
BCDL	10.0	Code FBC2023/TPI2014	Matrix-S		Wind(LL) 0.06 15 >999 240	Weight: 283 lb	FT = 20%

LUMBER-
TOP CHORD 2x4 SP No.2
BOT CHORD 2x4 SP No.2
WEBS 2x4 SP No.2
WEDGE
Left: 2x4 SP No.2
SLIDER Right 2x4 SP No.2 3-1-12

BRACING-
TOP CHORD Structural wood sheathing directly applied or 2-10-15 oc purlins.
BOT CHORD Rigid ceiling directly applied or 3-10-12 oc bracing.
WEBS 1 Row at midpt 8-17

REACTIONS. (size) 2=0-3-8, 22=0-4-0, 12=0-4-0
Max Horz 2=153(LC 11)
Max Uplift 2=-144(LC 12), 22=-164(LC 12), 12=-61(LC 12)
Max Grav 2=336(LC 23), 22=2242(LC 17), 12=1585(LC 18)

FORCES. (lb) - Max. Comp./Max. Ten. - All forces 250 (lb) or less except when shown.
TOP CHORD 2-3=-27/313, 3-4=-54/850, 4-5=-1369/130, 5-6=-1628/190, 6-7=-1827/219, 7-8=-1827/219, 8-9=-2067/215, 9-10=-2432/212, 10-12=-2769/190
BOT CHORD 21-22=-2249/256, 4-21=-1986/169, 20-21=-708/89, 19-20=-15/1233, 17-19=0/1450, 15-17=-19/1775, 14-15=-77/2132, 13-14=-110/2336, 12-13=-109/2340
WEBS 3-23=-32/336, 3-21=-654/173, 4-20=-112/2037, 5-20=-660/111, 5-19=0/420, 6-17=-52/709, 7-17=-405/117, 8-15=-0/638, 9-15=-557/87, 9-14=0/304, 10-14=-265/53

NOTES-
1) Unbalanced roof live loads have been considered for this design.
2) Wind: ASCE 7-22; Vult=130mph (3-second gust) Vasd=101mph; TCDL=4.2psf; BCDL=6.0psf; h=15ft; B=45ft; L=24ft; eave=6ft; Cat. II; Exp B; Encl., GCpi=0.18; MWFRS (directional) and C-C Zone3 -2-0-0 to 1-0-0, Zone1 1-0-0 to 19-0-0, Zone2 19-0-0 to 23-2-15, Zone1 23-2-15 to 30-10-0, Zone2 30-10-0 to 35-0-15, Zone1 35-0-15 to 45-2-0 zone; cantilever left and right exposed ; porch left exposed;C-C for members and forces & MWFRS for reactions shown; Lumber DOL=1.60 plate grip DOL=1.60
3) Building Designer / Project engineer responsible for verifying applied roof live load shown covers rain loading requirements specific to the use of this truss component.
4) Provide adequate drainage to prevent water ponding.
5) All plates are 3x6 MT20 unless otherwise indicated.
6) This truss has been designed for a 10.0 psf bottom chord live load nonconcurrent with any other live loads.
7) * This truss has been designed for a live load of 20.0psf on the bottom chord in all areas where a rectangle 3-6-0 tall by 2-0-0 wide will fit between the bottom chord and any other members, with BCDL = 10.0psf.
8) Provide mechanical connection (by others) of truss to bearing plate capable of withstanding 100 lb uplift at joint(s) 12 except (jt=lb) 2=144, 22=164.

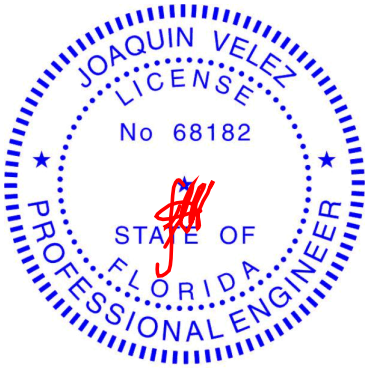

Joaquin Velez PE No.68182
MiTek Inc. DBA MiTek USA FL Cert 6634
16023 Swingley Ridge Rd. Chesterfield, MO 63017

Date:

July 25,2024

MiTek®
16023 Swingley Ridge Rd.
Chesterfield, MO 63017
314.434.1200 / MiTek-US.com

Job	Truss	Truss Type	Qty	Ply	2508-CR-2 Car
6243113	A14	Hip	1	1	T34534215
					Job Reference (optional)

Tibbetts Lumber Co., LLC (Ocala, FL), Ocala, FL - 34472, 8.730 s Jul 11 2024 MiTek Industries, Inc. Wed Jul 24 11:26:54 2024 Page 1
ID:Ts3RJ0261_Xu2fYgSyBHAWzZSLZ-qAnPig5ONs8Sn1?hG8msrhvkoUAtwnM6hpCYLQyuswl

-2-0-0	6-4-12	9-1-0	17-0-0	24-11-0	32-10-0	39-5-4	45-2-0
2-0-0	6-4-12	2-8-4	7-11-0	7-11-0	7-11-0	6-7-5	5-8-12

Scale = 1:83.6

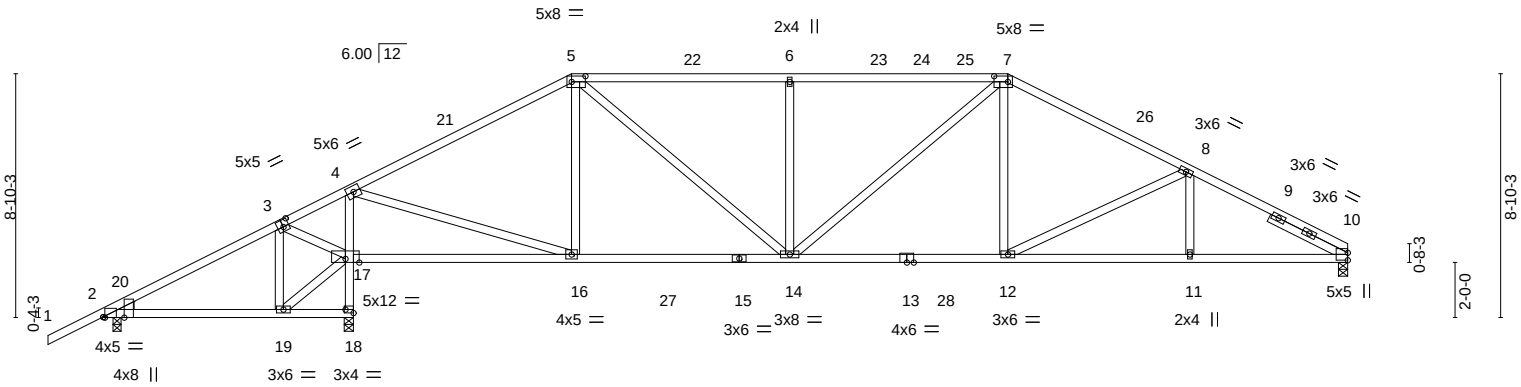

0-4-5	4-9-12	8-11-0	9-1-0	17-0-0	24-11-0	32-10-0	38-10-4	45-2-0
0-4-5	4-5-7	4-1-4	0-2-0	7-11-0	7-11-0	7-11-0	6-0-4	6-3-12

Plate Offsets (X,Y)-- [2:0-0-4,Edge], [2:0-0-12,Edge], [3:0-2-8,0-3-0], [5:0-6-0,0-2-8], [7:0-6-0,0-2-8], [18:Edge,0-1-8]

LOADING (psf)		**SPACING-** 2-0-0	**CSI.**		**DEFL.** in (loc) l/defl L/d	**PLATES**	**GRIP**
TCLL	20.0	Plate Grip DOL 1.25	TC	0.89	Vert(LL) -0.20 12-14 >999 360	MT20	244/190
TCDL	10.0	Lumber DOL 1.25	BC	0.85	Vert(CT) -0.38 12-14 >999 240		
BCLL	0.0 *	Rep Stress Incr YES	WB	0.46	Horz(CT) 0.08 10 n/a n/a		
BCDL	10.0	Code FBC2023/TPI2014	Matrix-S		Wind(LL) 0.07 14 >999 240	Weight: 252 lb	FT = 20%

LUMBER-
TOP CHORD 2x4 SP No.2
BOT CHORD 2x4 SP No.2
WEBS 2x4 SP No.2
WEDGE
Left: 2x4 SP No.2
SLIDER Right 2x4 SP No.2 3-1-12

BRACING-
TOP CHORD Structural wood sheathing directly applied.
BOT CHORD Rigid ceiling directly applied or 3-11-0 oc bracing.

REACTIONS. (size) 10=0-4-0, 2=0-3-8, 18=0-4-0
Max Horz 2=137(LC 11)
Max Uplift 10=-61(LC 12), 2=-70(LC 12), 18=-86(LC 12)
Max Grav 10=1597(LC 18), 2=360(LC 23), 18=2258(LC 17)

FORCES. (lb) - Max. Comp./Max. Ten. - All forces 250 (lb) or less except when shown.
TOP CHORD 3-4=-31/675, 4-5=-1705/157, 5-6=-2163/225, 6-7=-2163/225, 7-8=-2311/202, 8-10=-2830/196
BOT CHORD 17-18=-2266/145, 4-17=-1906/197, 16-17=-493/46, 14-16=-1/1473, 12-14=-39/1985, 11-12=-123/2404, 10-11=-123/2404
WEBS 3-19=0/281, 3-17=-536/51, 4-16=-48/1968, 5-16=-337/116, 5-14=-71/969, 6-14=-538/148, 7-14=-20/357, 7-12=0/515, 8-12=-477/92

NOTES-
1) Unbalanced roof live loads have been considered for this design.
2) Wind: ASCE 7-22; Vult=130mph (3-second gust) Vasd=101mph; TCDL=4.2psf; BCDL=6.0psf; h=15ft; B=45ft; L=24ft; eave=6ft; Cat. II; Exp B; Encl., GCpi=0.18; MWFRS (directional) and C-C Zone3 -2-0-0 to 1-0-0, Zone1 1-0-0 to 17-0-0, Zone2 17-0-0 to 21-2-15, Zone1 21-2-15 to 32-10-0, Zone2 32-10-0 to 37-0-15, Zone1 37-0-15 to 45-2-0 zone; cantilever left and right exposed ;C-C for members and forces & MWFRS for reactions shown; Lumber DOL=1.60 plate grip DOL=1.60
3) Building Designer / Project engineer responsible for verifying applied roof live load shown covers rain loading requirements specific to the use of this truss component.
4) Provide adequate drainage to prevent water ponding.
5) This truss has been designed for a 10.0 psf bottom chord live load nonconcurrent with any other live loads.
6) * This truss has been designed for a live load of 20.0psf on the bottom chord in all areas where a rectangle 3-6-0 tall by 2-0-0 wide will fit between the bottom chord and any other members, with BCDL = 10.0psf.
7) Provide mechanical connection (by others) of truss to bearing plate capable of withstanding 100 lb uplift at joint(s) 10, 2, 18.

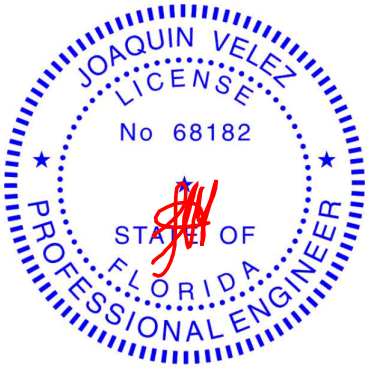

Joaquin Velez PE No.68182
MiTek Inc. DBA MiTek USA FL Cert 6634
16023 Swingley Ridge Rd. Chesterfield, MO 63017

Date:
July 25,2024

MiTek®
16023 Swingley Ridge Rd.
Chesterfield, MO 63017
314.434.1200 / MiTek-US.com

Job	Truss	Truss Type	Qty	Ply	2508-CR-2 Car
6243113	A15	Hip	1	1	T34534216
					Job Reference (optional)

Tibbetts Lumber Co., LLC (Ocala, FL), Ocala, FL - 34472, 8.730 s Jul 11 2024 MiTek Industries, Inc. Wed Jul 24 11:26:54 2024 Page 1

ID:Ts3RJ0261_Xu2fYgSyBHAWzZSLZ-qAnPig5ONs8Sn1?hG8msrhvoTUETwoZ6hpCYLQyuswl

-2-0-0	6-4-12	9-1-0	15-0-0	21-7-15	28-2-1	34-10-0	39-10-4	45-2-0
2-0-0	6-4-12	2-8-4	5-11-0	6-7-15	6-6-3	6-7-15	5-0-4	5-3-12

Scale = 1:83.6

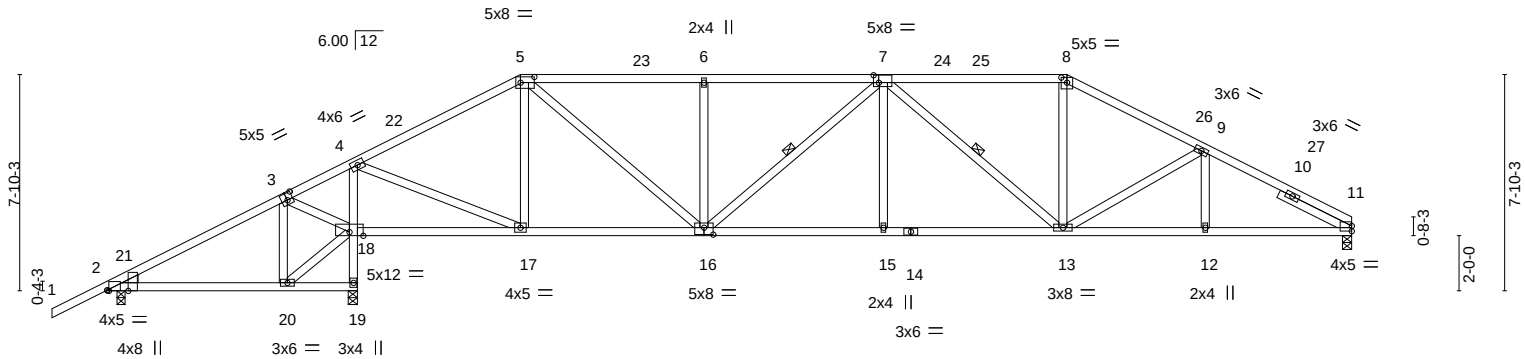

0-4-5	4-9-12	8-11-0	9-1-0	15-0-0	21-7-15	28-2-1	34-10-0	39-10-4	45-2-0
0-4-5	4-5-7	4-1-4	0-2-0	5-11-0	6-7-15	6-6-3	6-7-15	5-0-4	5-3-12

Plate Offsets (X,Y)-- [2:0-0-4,Edge], [2:0-0-12,Edge], [3:0-2-8,0-3-0], [5:0-6-0,0-2-8], [7:0-2-4,0-3-4], [8:0-2-8,0-2-4], [11:0-0-0,0-2-4], [16:0-4-0,0-3-0]

LOADING (psf)		SPACING-	2-0-0	CSI.		DEFL.	in	(loc)	l/defl	L/d	PLATES	GRIP
TCLL	20.0	Plate Grip DOL	1.25	TC	0.59	Vert(LL)	-0.14	15	>999	360	MT20	244/190
TCDL	10.0	Lumber DOL	1.25	BC	0.62	Vert(CT)	-0.30	15-16	>999	240		
BCLL	0.0 *	Rep Stress Incr	YES	WB	0.45	Horz(CT)	0.08	11	n/a	n/a		
BCDL	10.0	Code FBC2023/TPI2014		Matrix-S		Wind(LL)	0.08	15	>999	240	Weight: 256 lb	FT = 20%

LUMBER-

TOP CHORD 2x4 SP No.2
BOT CHORD 2x4 SP No.2
WEBS 2x4 SP No.2
WEDGE
Left: 2x4 SP No.2
SLIDER Right 2x4 SP No.2 2-11-0

BRACING-

TOP CHORD Structural wood sheathing directly applied or 3-1-8 oc purlins.
BOT CHORD Rigid ceiling directly applied or 4-0-10 oc bracing.
WEBS 1 Row at midpt 7-16, 7-13

REACTIONS. (size) 11=0-4-0, 2=0-3-8, 19=0-4-0
Max Horz 2=120(LC 11)
Max Uplift 11=-61(LC 12), 2=-70(LC 12), 19=-87(LC 12)
Max Grav 11=1390(LC 1), 2=272(LC 23), 19=2090(LC 1)

FORCES. (lb) - Max. Comp./Max. Ten. - All forces 250 (lb) or less except when shown.

TOP CHORD 2-3=-46/364, 3-4=-42/958, 4-5=-1256/137, 5-6=-1954/212, 6-7=-1954/212, 7-8=-1861/205, 8-9=-2110/204, 9-11=-2463/193
BOT CHORD 2-20=-295/33, 18-19=-2097/148, 4-18=-1923/176, 17-18=-788/74, 16-17=0/1029, 15-16=-83/2224, 13-15=-83/2224, 12-13=-120/2075, 11-12=-120/2075
WEBS 3-20=0/360, 18-20=-362/55, 3-18=-681/69, 4-17=-79/1976, 5-17=-600/110, 5-16=-86/1237, 6-16=-419/120, 7-16=-375/31, 7-15=0/265, 7-13=-584/35, 8-13=0/571, 9-13=-276/73

NOTES-

1) Unbalanced roof live loads have been considered for this design.
2) Wind: ASCE 7-22; Vult=130mph (3-second gust) Vasd=101mph; TCDL=4.2psf; BCDL=6.0psf; h=15ft; B=45ft; L=24ft; eave=6ft; Cat. II; Exp B; Encl., GCpi=0.18; MWFRS (directional) and C-C Zone3 -2-0-0 to 1-0-0, Zone1 1-0-0 to 15-0-0, Zone2 15-0-0 to 19-2-15, Zone1 19-2-15 to 34-10-0, Zone2 34-10-0 to 39-0-15, Zone1 39-0-15 to 45-2-0 zone; cantilever left and right exposed ;C-C for members and forces & MWFRS for reactions shown; Lumber DOL=1.60 plate grip DOL=1.60
3) Building Designer / Project engineer responsible for verifying applied roof live load shown covers rain loading requirements specific to the use of this truss component.
4) Provide adequate drainage to prevent water ponding.
5) This truss has been designed for a 10.0 psf bottom chord live load nonconcurrent with any other live loads.
6) * This truss has been designed for a live load of 20.0psf on the bottom chord in all areas where a rectangle 3-6-0 tall by 2-0-0 wide will fit between the bottom chord and any other members.
7) Provide mechanical connection (by others) of truss to bearing plate capable of withstanding 100 lb uplift at joint(s) 11, 2, 19.

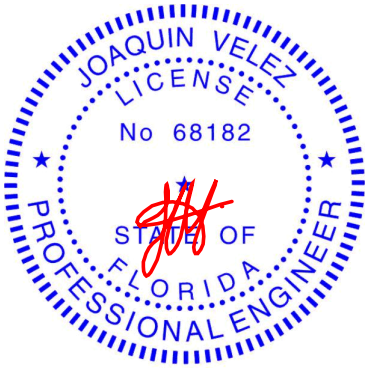

Joaquin Velez PE No.68182
MiTek Inc. DBA MiTek USA FL Cert 6634
16023 Swingley Ridge Rd. Chesterfield, MO 63017
Date:

July 25,2024

Job	Truss	Truss Type	Qty	Ply	2508-CR-2 Car
6243113	A16	Roof Special	1	1	T34534217
					Job Reference (optional)

Tibbetts Lumber Co., LLC (Ocala, FL), Ocala, FL - 34472, 8.730 s Jul 11 2024 MiTek Industries, Inc. Wed Jul 24 11:26:55 2024 Page 1

ID:Ts3RJ0261_Xu2fYgSyBHAWzZSLZ-IMLnv0618AGJPBauqrH5OvSw1uWPf8TGvTy5tsyuswk

-2-0-0	6-4-11	13-0-0	20-11-15	28-10-1	36-10-0	37-7-8	41-6-0	45-6-4	49-10-0
2-0-0	6-4-11	6-7-4	7-11-15	7-10-3	7-11-15	0-9-8	3-10-8	4-0-4	4-3-12

Scale = 1:90.4

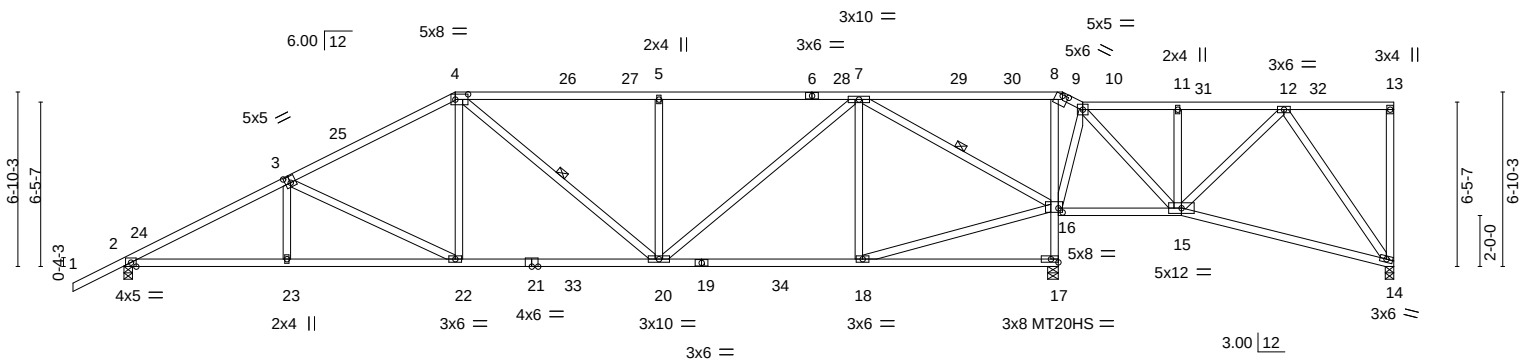

6-4-11	13-0-0	20-11-15	28-10-1	36-5-8	36-8-0	41-6-0	49-10-0
6-4-11	6-7-4	7-11-15	7-10-3	7-7-7	0-2-8	4-10-0	8-4-0

Plate Offsets (X,Y)-- [3:0-2-8,0-3-0], [4:0-6-0,0-2-8], [9:0-3-0,0-0-7], [16:0-2-0,0-2-0]

LOADING (psf)		SPACING- 2-0-0		CSI.		DEFL.	in	(loc)	l/defl	L/d	PLATES	GRIP
TCLL	20.0	Plate Grip DOL	1.25	TC	0.80	Vert(LL)	-0.20	20-22	>999	360	MT20	244/190
TCDL	10.0	Lumber DOL	1.25	BC	0.83	Vert(CT)	-0.37	20-22	>999	240	MT20HS	187/143
BCLL	0.0 *	Rep Stress Incr	YES	WB	0.85	Horz(CT)	0.08	17	n/a	n/a		
BCDL	10.0	Code FBC2023/TPI2014		Matrix-S		Wind(LL)	0.07	22	>999	240	Weight: 308 lb	FT = 20%

LUMBER-

TOP CHORD 2x4 SP No.2
BOT CHORD 2x4 SP No.2
WEBS 2x4 SP No.2

BRACING-

TOP CHORD Structural wood sheathing directly applied or 2-2-0 oc purlins, except end verticals.
BOT CHORD Rigid ceiling directly applied or 3-5-15 oc bracing.
WEBS 1 Row at midpt 4-20, 7-16

REACTIONS. (size) 14=0-4-0, 2=0-4-0, 17=0-5-0
Max Horz 2=182(LC 12)
Max Uplift 14=-41(LC 9), 2=-105(LC 12), 17=-133(LC 12)
Max Grav 14=197(LC 24), 2=1616(LC 17), 17=2766(LC 17)

FORCES. (lb) - Max. Comp./Max. Ten. - All forces 250 (lb) or less except when shown.

TOP CHORD 2-3=-2770/162, 3-4=-2123/160, 4-5=-1816/150, 5-7=-1816/150, 7-8=-90/1159, 8-9=-97/1165, 9-10=-139/1314, 10-11=-63/390, 11-12=-63/389
BOT CHORD 2-23=-270/2428, 22-23=-272/2423, 20-22=-174/1848, 18-20=-51/916, 16-17=-2650/280, 8-16=-831/211, 15-16=-1087/111
WEBS 3-23=0/269, 3-22=-655/109, 4-22=0/591, 5-20=-515/152, 7-20=-115/1169, 16-18=-69/925, 7-16=-2416/176, 10-16=-312/14, 10-15=-73/1045, 12-15=-475/106

NOTES-

1) Unbalanced roof live loads have been considered for this design.
2) Wind: ASCE 7-22; Vult=130mph (3-second gust) Vasd=101mph; TCDL=4.2psf; BCDL=6.0psf; h=15ft; B=45ft; L=24ft; eave=6ft; Cat. II; Exp B; Encl., GCpi=0.18; MWFRS (directional) and C-C Zone3 -2-0-0 to 1-0-0, Zone1 1-0-0 to 13-0-0, Zone2 13-0-0 to 17-2-15, Zone1 17-2-15 to 36-10-0, Zone3 36-10-0 to 37-7-8, Zone1 37-7-8 to 49-8-4 zone; cantilever left and right exposed ;C-C for members and forces & MWFRS for reactions shown; Lumber DOL=1.60 plate grip DOL=1.60
3) Building Designer / Project engineer responsible for verifying applied roof live load shown covers rain loading requirements specific to the use of this truss component.
4) Provide adequate drainage to prevent water ponding.
5) All plates are MT20 plates unless otherwise indicated.
6) This truss has been designed for a 10.0 psf bottom chord live load nonconcurrent with any other live loads.
7) * This truss has been designed for a live load of 20.0psf on the bottom chord in all areas where a rectangle 3-6-0 tall by 2-0-0 wide will fit between the bottom chord and any other members, with BCDL = 10.0psf.
8) Bearing at joint(s) 14 considers parallel to grain value using ANSI/TPI 1 angle to grain formula. Building designer should verify capacity of bearing surface.
9) Provide mechanical connection (by others) of truss to bearing plate capable of withstanding 100 lb uplift at joint(s) 14 except (jt=lb) 2=105, 17=133.

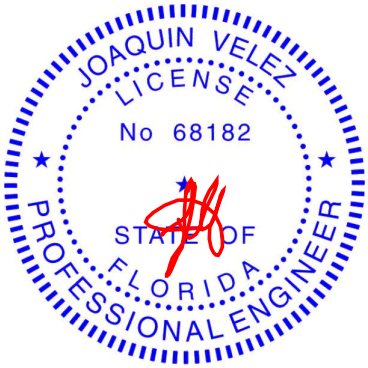

Joaquin Velez PE No.68182
MiTek Inc. DBA MiTek USA FL Cert 6634
16023 Swingley Ridge Rd. Chesterfield, MO 63017

Date:

July 25,2024

Job	Truss	Truss Type	Qty	Ply	2508-CR-2 Car
6243113	A17	Half Hip	1	1	T34534218
					Job Reference (optional)

Tibbetts Lumber Co., LLC (Ocala, FL), Ocala, FL - 34472, 8.730 s Jul 11 2024 MiTek Industries, Inc. Wed Jul 24 11:26:56 2024 Page 1
ID:Ts3RJ0261_Xu2fYgSyBHAWzZSLZ-mZv97M7fvTPA1L94NZoKw6?7DIubOeGP87hfPIyuswj

-2-0-0	6-4-12	11-0-0	17-5-0	23-10-0	30-3-0	36-8-0	41-6-0	45-6-4	49-10-0
2-0-0	6-4-12	4-7-4	6-5-0	6-5-0	6-5-0	6-5-0	4-10-0	4-0-4	4-3-12

Scale = 1:88.9

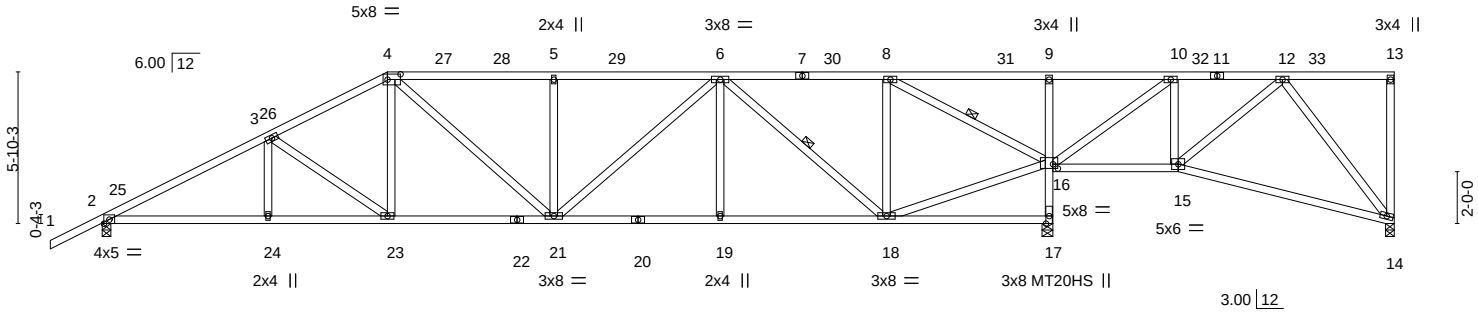

6-4-12	11-0-0	17-5-0	23-10-0	30-3-0	36-5-8	36-8-0	41-6-0	49-10-0
6-4-12	4-7-4	6-5-0	6-5-0	6-5-0	6-2-8	0-2-8	4-10-0	8-4-0

Plate Offsets (X,Y)-- [4:0-6-0,0-2-8], [16:0-2-4,0-2-0]

LOADING (psf)		SPACING- 2-0-0		CSI.		DEFL.	in	(loc)	l/defl	L/d	PLATES	GRIP
TCLL	20.0	Plate Grip DOL	1.25	TC	0.64	Vert(LL)	-0.17	14-15	>931	360	MT20	244/190
TCDL	10.0	Lumber DOL	1.25	BC	0.64	Vert(CT)	-0.34	14-15	>464	240	MT20HS	187/143
BCLL	0.0 *	Rep Stress Incr	YES	WB	0.69	Horz(CT)	0.09	17	n/a	n/a		
BCDL	10.0	Code FBC2023/TPI2014		Matrix-S		Wind(LL)	0.08	21	>999	240	Weight: 300 lb	FT = 20%

LUMBER-
TOP CHORD 2x4 SP No.2
BOT CHORD 2x4 SP No.2
WEBS 2x4 SP No.2

BRACING-
TOP CHORD Structural wood sheathing directly applied or 3-1-9 oc purlins, except end verticals.
BOT CHORD Rigid ceiling directly applied or 3-8-8 oc bracing.
WEBS 1 Row at midpt 6-18, 8-16

REACTIONS. (size) 14=0-4-0, 2=0-4-0, 17=0-5-0
Max Horz 2=168(LC 12)
Max Uplift 14=-45(LC 9), 2=-109(LC 12), 17=-124(LC 12)
Max Grav 14=172(LC 1), 2=1459(LC 1), 17=2461(LC 1)

FORCES. (lb) - Max. Comp./Max. Ten. - All forces 250 (lb) or less except when shown.
TOP CHORD 2-3=-2448/142, 3-4=-2016/154, 4-5=-2013/156, 5-6=-2013/156, 6-8=-707/38, 8-9=-96/1247, 9-10=-100/1257, 10-12=-46/323
BOT CHORD 2-24=-224/2096, 23-24=-224/2096, 21-23=-160/1750, 19-21=-112/1651, 18-19=-112/1651, 16-17=-2405/199, 9-16=-352/94, 15-16=-341/45
WEBS 3-23=-431/77, 4-23=0/398, 4-21=-6/348, 5-21=-411/121, 6-21=-58/479, 6-19=0/250, 6-18=-1248/100, 8-18=0/725, 16-18=-48/749, 8-16=-2246/151, 10-16=-1137/68, 10-15=0/436, 12-15=-434/84

NOTES-
1) Wind: ASCE 7-22; Vult=130mph (3-second gust) Vasd=101mph; TCDL=4.2psf; BCDL=6.0psf; h=15ft; B=45ft; L=24ft; eave=6ft; Cat. II; Exp B; Encl., GCpi=0.18; MWFRS (directional) and C-C Zone3 -2-0-0 to 1-0-0, Zone1 1-0-0 to 11-0-0, Zone2 11-0-0 to 15-2-15, Zone1 15-2-15 to 49-8-4 zone; cantilever left and right exposed ;C-C for members and forces & MWFRS for reactions shown; Lumber DOL=1.60 plate grip DOL=1.60
2) Building Designer / Project engineer responsible for verifying applied roof live load shown covers rain loading requirements specific to the use of this truss component.
3) Provide adequate drainage to prevent water ponding.
4) All plates are MT20 plates unless otherwise indicated.
5) All plates are 3x6 MT20 unless otherwise indicated.
6) This truss has been designed for a 10.0 psf bottom chord live load nonconcurrent with any other live loads.
7) * This truss has been designed for a live load of 20.0psf on the bottom chord in all areas where a rectangle 3-6-0 tall by 2-0-0 wide will fit between the bottom chord and any other members.
8) Bearing at joint(s) 14 considers parallel to grain value using ANSI/TPI 1 angle to grain formula. Building designer should verify capacity of bearing surface.
9) Provide mechanical connection (by others) of truss to bearing plate capable of withstanding 100 lb uplift at joint(s) 14 except (jt=lb) 2=109, 17=124.

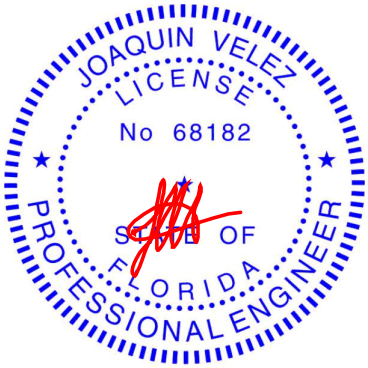

Joaquin Velez PE No.68182
MiTek Inc. DBA MiTek USA FL Cert 6634
16023 Swingley Ridge Rd. Chesterfield, MO 63017
Date:

July 25,2024

MiTek®
16023 Swingley Ridge Rd.
Chesterfield, MO 63017
314.434.1200 / MiTek-US.com

Job	Truss	Truss Type	Qty	Ply	2508-CR-2 Car
6243113	A18	Half Hip	1	1	T34534219
					Job Reference (optional)

Tibbetts Lumber Co., LLC (Ocala, FL), Ocala, FL - 34472, 8.730 s Jul 11 2024 MiTek Industries, Inc. Wed Jul 24 11:26:56 2024 Page 1

ID:Ts3RJ0261_Xu2fYgSyBHAWzZSLZ-mZv97M7fvTPA1L94NZoKw6?6FlujOeeP87hfPIyuswj

-2-0-0	6-4-12	9-0-0	15-11-0	22-10-0	29-9-0	36-8-0	41-6-0	45-6-4	49-10-0
2-0-0	6-4-12	2-7-4	6-11-0	6-11-0	6-11-0	6-11-0	4-10-0	4-0-4	4-3-12

Scale = 1:88.9

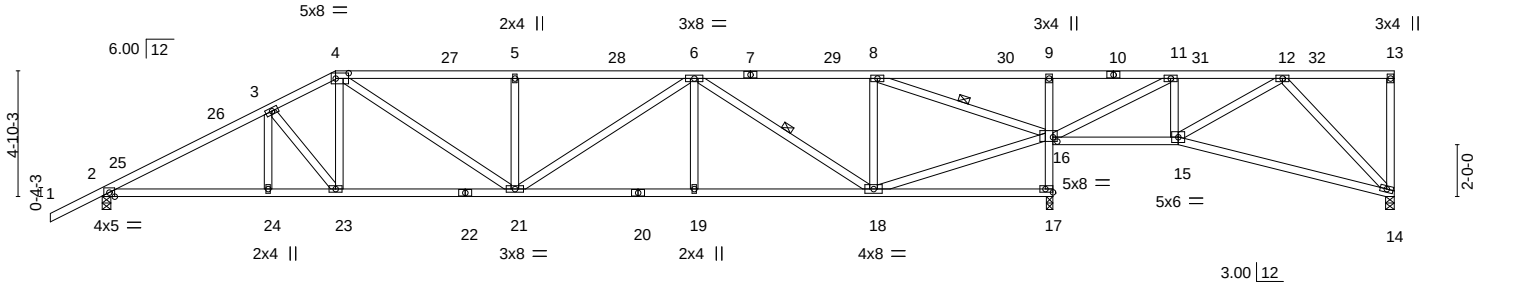

6-4-12	9-0-0	15-11-0	22-10-0	29-9-0	36-6-8	36-8-0	41-6-0	49-10-0
6-4-12	2-7-4	6-11-0	6-11-0	6-11-0	6-9-8	0-1-8	4-10-0	8-4-0

Plate Offsets (X,Y)-- [4:0-6-0,0-2-8], [16:0-2-0,0-2-0], [17:Edge,0-1-8]

LOADING (psf)		**SPACING-** 2-0-0	**CSI.**		**DEFL.** in (loc) l/defl L/d	**PLATES**	**GRIP**
TCLL	20.0	Plate Grip DOL 1.25	TC	0.77	Vert(LL) -0.18 19-21 >999 360	MT20	244/190
TCDL	10.0	Lumber DOL 1.25	BC	0.70	Vert(CT) -0.38 19-21 >999 240		
BCLL	0.0 *	Rep Stress Incr YES	WB	0.67	Horz(CT) 0.10 17 n/a n/a		
BCDL	10.0	Code FBC2023/TPI2014	Matrix-S		Wind(LL) 0.11 19-21 >999 240	Weight: 284 lb	FT = 20%

LUMBER-

TOP CHORD 2x4 SP No.2
BOT CHORD 2x4 SP No.2
WEBS 2x4 SP No.2

BRACING-

TOP CHORD Structural wood sheathing directly applied or 2-2-0 oc purlins, except end verticals.
BOT CHORD Rigid ceiling directly applied or 3-8-14 oc bracing.
WEBS 1 Row at midpt 6-18, 8-16

REACTIONS. (size) 14=0-4-0, 2=0-4-0, 17=0-3-0
Max Horz 2=144(LC 12)
Max Uplift 14=-43(LC 9), 2=-114(LC 12), 17=-114(LC 12)
Max Grav 14=238(LC 1), 2=1484(LC 1), 17=2370(LC 1)

FORCES. (lb) - Max. Comp./Max. Ten. - All forces 250 (lb) or less except when shown.

TOP CHORD 2-3=-2492/156, 3-4=-2207/174, 4-5=-2545/184, 5-6=-2545/184, 6-8=-1143/63, 8-9=-93/1368, 9-11=-103/1396
BOT CHORD 2-24=-210/2134, 23-24=-210/2134, 21-23=-165/1945, 19-21=-145/2256, 18-19=-145/2256, 16-17=-2309/187, 9-16=-375/99, 15-16=-261/41
WEBS 3-23=-312/69, 4-23=0/366, 4-21=-33/719, 5-21=-444/130, 6-21=-46/346, 6-19=0/269, 6-18=-1333/100, 8-18=0/587, 16-18=-77/1204, 8-16=-2684/165, 11-16=-1284/70, 11-15=0/387, 12-15=-380/84

NOTES-

1) Wind: ASCE 7-22; Vult=130mph (3-second gust) Vasd=101mph; TCDL=4.2psf; BCDL=6.0psf; h=15ft; B=45ft; L=24ft; eave=6ft; Cat. II; Exp B; Encl., GCpi=0.18; MWFRS (directional) and C-C Zone3 -2-0-0 to 1-0-0, Zone1 1-0-0 to 9-0-0, Zone2 9-0-0 to 13-2-15, Zone1 13-2-15 to 49-8-4 zone; cantilever left and right exposed ;C-C for members and forces & MWFRS for reactions shown; Lumber DOL=1.60 plate grip DOL=1.60
2) Building Designer / Project engineer responsible for verifying applied roof live load shown covers rain loading requirements specific to the use of this truss component.
3) Provide adequate drainage to prevent water ponding.
4) All plates are 3x6 MT20 unless otherwise indicated.
5) This truss has been designed for a 10.0 psf bottom chord live load nonconcurrent with any other live loads.
6) * This truss has been designed for a live load of 20.0psf on the bottom chord in all areas where a rectangle 3-6-0 tall by 2-0-0 wide will fit between the bottom chord and any other members.
7) Bearing at joint(s) 14 considers parallel to grain value using ANSI/TPI 1 angle to grain formula. Building designer should verify capacity of bearing surface.
8) Provide mechanical connection (by others) of truss to bearing plate capable of withstanding 100 lb uplift at joint(s) 14 except (jt=lb) 2=114, 17=114.

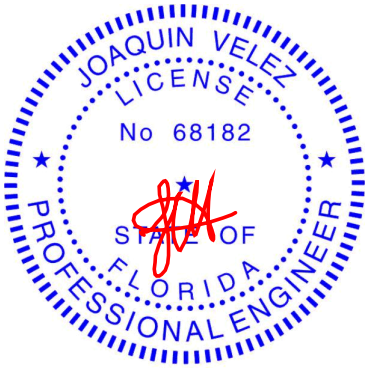

Joaquin Velez PE No.68182
MiTek Inc. DBA MiTek USA FL Cert 6634
16023 Swingley Ridge Rd. Chesterfield, MO 63017
Date:

July 25,2024

Job	Truss	Truss Type	Qty	Ply	2508-CR-2 Car
6243113	A19	Half Hip Girder	1	2	T34534220

Job Reference (optional)

Tibbetts Lumber Co., LLC (Ocala, FL), Ocala, FL - 34472, 8.730 s Jul 11 2024 MiTek Industries, Inc. Wed Jul 24 11:26:59 2024 Page 1

ID:Ts3RJ0261_Xu2fYgSyBHAWzZSLZ-B7aHIO9XCOnluouf3hM1YkdfhVvEbz7rq5wJ0dyuswg

-2-0-0	7-0-0	12-11-3	18-10-6	24-9-10	30-8-13	36-8-0	42-7-0	46-0-12	49-10-0
2-0-0	7-0-0	5-11-3	5-11-3	5-11-3	5-11-3	5-11-3	5-11-0	3-5-12	3-9-4

Scale = 1:88.9

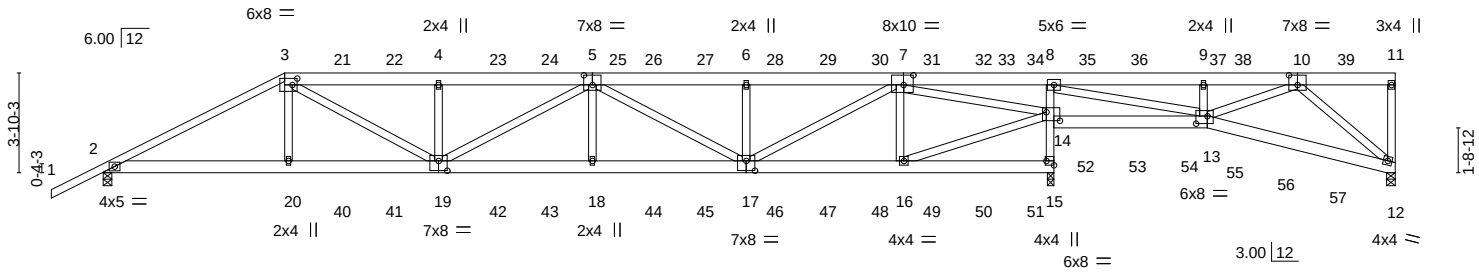

7-0-0	12-11-3	18-10-6	24-9-10	30-8-13	36-6-8	36-8-0	42-7-0	49-10-0
7-0-0	5-11-3	5-11-3	5-11-3	5-11-3	5-9-11	0-1-8	5-11-0	7-3-0

Plate Offsets (X,Y)-- [3:0-2-4,0-3-0], [5:0-4-0,0-4-8], [7:0-4-8,0-4-8], [10:0-4-0,0-4-8], [13:0-5-4,0-3-8], [14:0-6-4,0-4-0], [15:Edge,0-3-8], [17:0-4-0,0-4-8], [19:0-4-0,0-4-8]

LOADING (psf)		SPACING- 2-0-0		CSI.		DEFL. in (loc) l/defl L/d		PLATES	GRIP
TCLL	20.0	Plate Grip DOL	1.25	TC	0.63	Vert(LL) -0.22 18 >999 360		MT20	244/190
TCDL	10.0	Lumber DOL	1.25	BC	0.71	Vert(CT) -0.45 18-19 >972 240			
BCLL	0.0 *	Rep Stress Incr	NO	WB	0.81	Horz(CT) 0.09 15 n/a n/a			
BCDL	10.0	Code FBC2023/TPI2014		Matrix-S		Wind(LL) 0.15 18 >999 240		Weight: 680 lb	FT = 20%

LUMBER-

TOP CHORD 2x6 SP No.2 *Except*
1-3: 2x4 SP No.2

BOT CHORD 2x6 SP No.2 *Except*
8-15: 2x4 SP No.2

WEBS 2x4 SP No.2

BRACING-

TOP CHORD Structural wood sheathing directly applied or 4-10-1 oc purlins, except end verticals.

BOT CHORD Rigid ceiling directly applied or 5-7-10 oc bracing.

REACTIONS. (size) 12=0-4-0, 2=0-4-0, 15=0-3-0
Max Horz 2=119(LC 27)
Max Uplift 12=-34(LC 5), 2=-181(LC 8), 15=-318(LC 8)
Max Grav 12=901(LC 20), 2=2758(LC 1), 15=4624(LC 1)

FORCES. (lb) - Max. Comp./Max. Ten. - All forces 250 (lb) or less except when shown.

TOP CHORD 2-3=-5363/226, 3-4=-7071/436, 4-5=-7069/435, 5-6=-6462/441, 6-7=-6462/441, 7-8=-144/2472, 8-9=-749/25, 9-10=-714/11, 11-12=-358/54

BOT CHORD 2-20=-227/4708, 19-20=-219/4728, 18-19=-500/7605, 17-18=-500/7605, 16-17=-217/3294, 14-15=-4496/383, 8-14=-1847/287, 13-14=-2442/167, 12-13=-77/640

WEBS 3-20=0/681, 3-19=-250/2780, 4-19=-809/247, 5-19=-651/74, 5-18=0/517, 5-17=-1316/67, 6-17=-838/264, 7-17=-257/3628, 7-16=-909/252, 14-16=-246/3611, 7-14=-5973/382, 8-13=-155/3281, 9-13=-398/162, 10-12=-757/91

NOTES-

1) 2-ply truss to be connected together with 10d (0.131"x3") nails as follows:
Top chords connected as follows: 2x4 - 1 row at 0-9-0 oc, 2x6 - 2 rows staggered at 0-9-0 oc.
Bottom chords connected as follows: 2x6 - 2 rows staggered at 0-9-0 oc, 2x4 - 1 row at 0-9-0 oc.
Webs connected as follows: 2x4 - 1 row at 0-9-0 oc.
2) All loads are considered equally applied to all plies, except if noted as front (F) or back (B) face in the LOAD CASE(S) section. Ply to ply connections have been provided to distribute only loads noted as (F) or (B), unless otherwise indicated.
3) Unbalanced roof live loads have been considered for this design.
4) Wind: ASCE 7-22; Vult=130mph (3-second gust) Vasd=101mph; TCDL=4.2psf; BCDL=6.0psf; h=15ft; B=45ft; L=24ft; eave=6ft; Cat. II; Exp B; Encl., GCpi=0.18; MWFRS (directional); cantilever left and right exposed ; Lumber DOL=1.60 plate grip DOL=1.60
5) Building Designer / Project engineer responsible for verifying applied roof live load shown covers rain loading requirements specific to the use of this truss component.
6) Provide adequate drainage to prevent water ponding.
7) This truss has been designed for a 10.0 psf bottom chord live load nonconcurrent with any other live loads.
8) * This truss has been designed for a live load of 20.0psf on the bottom chord in all areas where a rectangle 3-6-0 tall by 2-0-0 wide will fit between the bottom chord and any other members.
9) Bearing at joint(s) 12 considers parallel to grain value using ANSI/TPI 1 angle to grain formula. Building designer should verify capacity of bearing surface.
10) Provide mechanical connection (by others) of truss to bearing plate capable of withstanding 100 lb uplift at joint(s) 12 except (jt=lb) 2=181, 15=318.

Continued on page 2

JOAQUIN VELEZ LICENSE No 68182 STATE OF FLORIDA PROFESSIONAL ENGINEER

Joaquin Velez PE No.68182
MiTek Inc. DBA MiTek USA FL Cert 6634
16023 Swingley Ridge Rd. Chesterfield, MO 63017
Date: July 25,2024

MiTek®
16023 Swingley Ridge Rd.
Chesterfield, MO 63017
314.434.1200 / MiTek-US.com

NOTES-

11) Hanger(s) or other connection device(s) shall be provided sufficient to support concentrated load(s) 141 lb down and 86 lb up at 7-0-0, 122 lb down and 83 lb up at 9-0-12, 122 lb down and 83 lb up at 11-0-12, 122 lb down and 83 lb up at 13-0-12, 122 lb down and 83 lb up at 15-0-12, 122 lb down and 83 lb up at 17-0-12, 122 lb down and 83 lb up at 19-0-12, 122 lb down and 83 lb up at 21-0-12, 122 lb down and 83 lb up at 23-0-12, 122 lb down and 83 lb up at 25-0-12, 122 lb down and 83 lb up at 25-9-0, 122 lb down and 83 lb up at 27-9-9, 122 lb down and 83 lb up at 29-9-9, 122 lb down and 83 lb up at 31-9-9, 122 lb down and 83 lb up at 33-9-9, 122 lb down and 83 lb up at 35-9-9, 122 lb down and 83 lb up at 37-9-9, 122 lb down and 83 lb up at 39-9-9, 122 lb down and 83 lb up at 41-9-9, 182 lb down and 48 lb up at 43-9-9, 49 lb down and 35 lb up at 45-9-4, and 142 lb down and 71 lb up at 47-9-4, and 220 lb down and 30 lb up at 49-8-4 on top chord, and 310 lb down at 7-0-0, 95 lb down at 9-0-12, 95 lb down at 11-0-12, 95 lb down at 13-0-12, 95 lb down at 15-0-12, 95 lb down at 17-0-12, 95 lb down at 19-0-12, 95 lb down at 21-0-12, 95 lb down at 23-0-12, 95 lb down at 25-0-12, 95 lb down at 25-9-0, 95 lb down at 27-9-9, 95 lb down at 29-9-9, 95 lb down at 31-9-9, 95 lb down at 33-9-9, 95 lb down at 35-9-9, 95 lb down at 37-9-9, 95 lb down at 39-9-9, 95 lb down at 41-9-9, at 43-9-9, and 165 lb down at 45-9-4, and 56 lb down at 47-9-4 on bottom chord. The design/selection of such connection device(s) is the responsibility of others.

LOAD CASE(S) Standard

1) Dead + Roof Live (balanced): Lumber Increase=1.25, Plate Increase=1.25
   Uniform Loads (plf)
   Vert: 1-3=-60, 3-11=-60, 2-15=-20, 13-14=-20, 12-13=-20
   Concentrated Loads (lb)
   Vert: 3=-122(B) 11=-220 20=-262(B) 19=-48(B) 4=-122(B) 5=-122(B) 18=-48(B) 17=-48(B) 6=-122(B) 10=-5(B) 21=-122(B) 22=-122(B) 23=-122(B) 24=-122(B) 26=-122(B) 27=-122(B) 28=-122(B) 29=-122(B) 30=-122(B) 31=-122(B) 32=-122(B) 34=-122(B) 35=-122(B) 36=-122(B) 37=-122(B) 38=-182(B) 39=-142(B) 40=-48(B) 41=-48(B) 42=-48(B) 43=-48(B) 44=-48(B) 45=-48(B) 46=-48(B) 47=-48(B) 48=-48(B) 49=-48(B) 50=-48(B) 51=-48(B) 52=-48(B) 53=-48(B) 54=-48(B) 56=-165(B) 57=-28(B)

Job	Truss	Truss Type	Qty	Ply	2508-CR-2 Car
6243113	B01	Common	9	1	T34534221 Job Reference (optional)

Tibbetts Lumber Co., LLC (Ocala, FL), Ocala, FL - 34472, 8.730 s Jul 11 2024 MiTek Industries, Inc. Wed Jul 24 11:27:00 2024 Page 1
ID:Ts3RJ0261_Xu2fYgSyBHAWzZSLZ-fK8gyjA9zivbVyTrcPtG5y9ujvJFKa3?3lfsY3yuswf

-2-0-0	5-0-8	8-4-13	11-11-0	15-5-4	18-9-8	23-10-0	25-10-0
2-0-0	5-0-8	3-4-4	3-6-4	3-6-3	3-4-4	5-0-8	2-0-0

Scale = 1:44.6

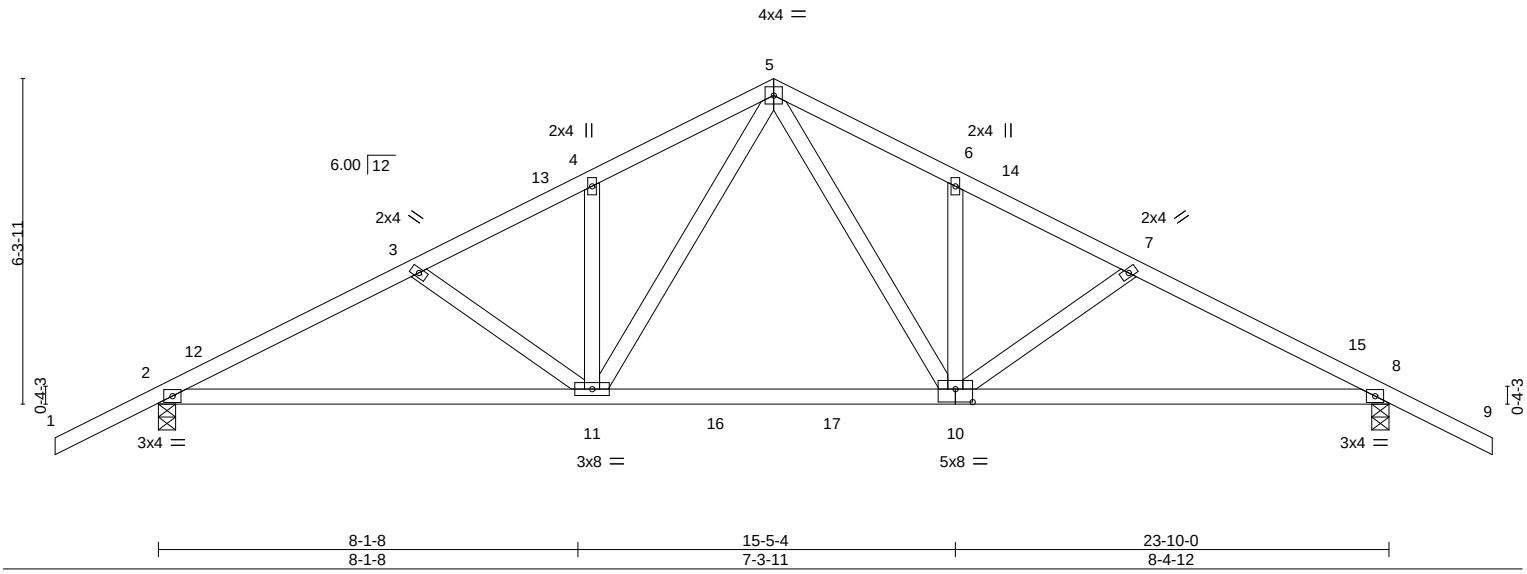

Plate Offsets (X,Y)-- [10:0-4-0,0-3-0]

LOADING (psf)		SPACING- 2-0-0		CSI.		DEFL. in (loc) l/defl L/d		PLATES GRIP
TCLL	20.0	Plate Grip DOL	1.25	TC	0.35	Vert(LL) -0.11 2-11 >999 360		MT20 244/190
TCDL	10.0	Lumber DOL	1.25	BC	0.47	Vert(CT) -0.29 10-11 >981 240		
BCLL	0.0 *	Rep Stress Incr	NO	WB	0.19	Horz(CT) 0.05 8 n/a n/a		
BCDL	10.0	Code FBC2023/TPI2014		Matrix-S		Wind(LL) 0.04 10-11 >999 240		Weight: 126 lb FT = 20%

LUMBER-
TOP CHORD 2x4 SP No.2
BOT CHORD 2x4 SP M 31 or 2x4 SP SS
WEBS 2x4 SP No.2

BRACING-
TOP CHORD Structural wood sheathing directly applied or 3-11-2 oc purlins.
BOT CHORD Rigid ceiling directly applied or 10-0-0 oc bracing.

REACTIONS. (size) 2=0-4-0, 8=0-4-0
Max Horz 2=-114(LC 10)
Max Grav 2=1298(LC 17), 8=1298(LC 18)

FORCES. (lb) - Max. Comp./Max. Ten. - All forces 250 (lb) or less except when shown.
TOP CHORD 2-3=-2069/0, 3-4=-1864/0, 4-5=-1870/0, 5-6=-1870/0, 6-7=-1864/0, 7-8=-2070/0
BOT CHORD 2-11=0/1859, 10-11=0/1242, 8-10=0/1774
WEBS 5-10=0/885, 5-11=0/885

NOTES-
1) Unbalanced roof live loads have been considered for this design.
2) Wind: ASCE 7-22; Vult=130mph (3-second gust) Vasd=101mph; TCDL=4.2psf; BCDL=6.0psf; h=15ft; B=45ft; L=24ft; eave=4ft; Cat. II; Exp B; Encl., GCpi=0.18; MWFRS (directional) and C-C Zone3 -2-0-0 to 1-0-0, Zone1 1-0-0 to 11-11-0, Zone2 11-11-0 to 16-1-15, Zone1 16-1-15 to 25-10-0 zone; cantilever left and right exposed ;C-C for members and forces & MWFRS for reactions shown; Lumber DOL=1.60 plate grip DOL=1.60
3) Building Designer / Project engineer responsible for verifying applied roof live load shown covers rain loading requirements specific to the use of this truss component.
4) This truss has been designed for a 10.0 psf bottom chord live load nonconcurrent with any other live loads.
5) * This truss has been designed for a live load of 20.0psf on the bottom chord in all areas where a rectangle 3-6-0 tall by 2-0-0 wide will fit between the bottom chord and any other members, with BCDL = 10.0psf.
6) Load case(s) 1, 2, 3, 4, 5, 6, 7, 8, 9, 10, 11, 12, 13, 14, 15, 16, 17, 18, 19, 20, 21, 22, 23, 24, 25, 26 has/have been modified. Building designer must review loads to verify that they are correct for the intended use of this truss.

LOAD CASE(S) Standard
1) Dead + Roof Live (balanced): Lumber Increase=1.25, Plate Increase=1.25
Uniform Loads (plf)
Vert: 1-5=-60, 5-9=-60, 2-11=-20, 10-11=-60, 8-10=-20
2) Dead + 0.75 Roof Live (balanced) + 0.75 Uninhab. Attic Storage: Lumber Increase=1.25, Plate Increase=1.25
Uniform Loads (plf)
Vert: 1-5=-50, 5-9=-50, 2-11=-35, 11-16=-75, 16-17=-90, 10-17=-75, 8-10=-35
3) Dead + Uninhabitable Attic Without Storage: Lumber Increase=1.25, Plate Increase=1.25
Uniform Loads (plf)
Vert: 1-5=-20, 5-9=-20, 2-11=-40, 10-11=-80, 8-10=-40
4) Dead + 0.6 C-C Wind (Pos. Internal) Case 1: Lumber Increase=1.60, Plate Increase=1.60

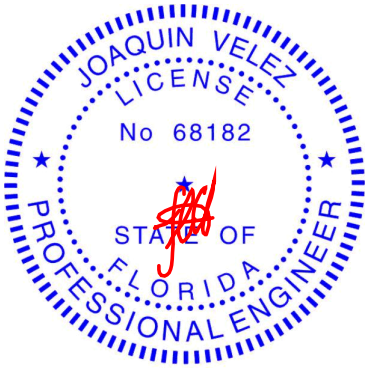

Joaquin Velez PE No.68182
MiTek Inc. DBA MiTek USA FL Cert 6634
16023 Swingley Ridge Rd. Chesterfield, MO 63017
Date:
July 25,2024

Continued on page 2

MiTek®
16023 Swingley Ridge Rd.
Chesterfield, MO 63017
314.434.1200 / MiTek-US.com

LOAD CASE(S) Standard

Uniform Loads (plf)
Vert: 1-2=47, 2-12=32, 5-12=17, 5-14=26, 8-14=17, 8-9=12, 2-11=-12, 10-11=-52, 8-10=-12
Horz: 1-2=-55, 2-12=-40, 5-12=-25, 5-14=35, 8-14=25, 8-9=21

5) Dead + 0.6 C-C Wind (Pos. Internal) Case 2: Lumber Increase=1.60, Plate Increase=1.60
Uniform Loads (plf)
Vert: 1-2=12, 2-13=17, 5-13=26, 5-15=17, 8-15=32, 8-9=47, 2-11=-12, 10-11=-52, 8-10=-12
Horz: 1-2=-21, 2-13=-25, 5-13=-35, 5-15=25, 8-15=40, 8-9=55

6) Dead + 0.6 C-C Wind (Neg. Internal) Case 1: Lumber Increase=1.60, Plate Increase=1.60
Uniform Loads (plf)
Vert: 1-2=-8, 2-5=-32, 5-8=-32, 8-9=-28, 2-11=-20, 10-11=-60, 8-10=-20
Horz: 1-2=-12, 2-5=12, 5-8=-12, 8-9=-8

7) Dead + 0.6 C-C Wind (Neg. Internal) Case 2: Lumber Increase=1.60, Plate Increase=1.60
Uniform Loads (plf)
Vert: 1-2=-28, 2-5=-32, 5-8=-32, 8-9=-8, 2-11=-20, 10-11=-60, 8-10=-20
Horz: 1-2=8, 2-5=12, 5-8=-12, 8-9=12

8) Dead + 0.6 MWFRS Wind (Pos. Internal) Left: Lumber Increase=1.60, Plate Increase=1.60
Uniform Loads (plf)
Vert: 1-2=15, 2-5=3, 5-8=9, 8-9=4, 2-11=-12, 10-11=-52, 8-10=-12
Horz: 1-2=-24, 2-5=-11, 5-8=17, 8-9=13

9) Dead + 0.6 MWFRS Wind (Pos. Internal) Right: Lumber Increase=1.60, Plate Increase=1.60
Uniform Loads (plf)
Vert: 1-2=4, 2-5=9, 5-8=3, 8-9=15, 2-11=-12, 10-11=-52, 8-10=-12
Horz: 1-2=-13, 2-5=-17, 5-8=11, 8-9=24

10) Dead + 0.6 MWFRS Wind (Neg. Internal) Left: Lumber Increase=1.60, Plate Increase=1.60
Uniform Loads (plf)
Vert: 1-2=-24, 2-5=-28, 5-8=-12, 8-9=-7, 2-11=-20, 10-11=-60, 8-10=-20
Horz: 1-2=4, 2-5=8, 5-8=8, 8-9=13

11) Dead + 0.6 MWFRS Wind (Neg. Internal) Right: Lumber Increase=1.60, Plate Increase=1.60
Uniform Loads (plf)
Vert: 1-2=-7, 2-5=-12, 5-8=-28, 8-9=-24, 2-11=-20, 10-11=-60, 8-10=-20
Horz: 1-2=-13, 2-5=-8, 5-8=-8, 8-9=-4

12) Dead + 0.6 MWFRS Wind (Pos. Internal) 1st Parallel: Lumber Increase=1.60, Plate Increase=1.60
Uniform Loads (plf)
Vert: 1-2=28, 2-5=15, 5-8=15, 8-9=28, 2-11=-12, 10-11=-52, 8-10=-12
Horz: 1-2=-37, 2-5=-24, 5-8=24, 8-9=37

13) Dead + 0.6 MWFRS Wind (Pos. Internal) 2nd Parallel: Lumber Increase=1.60, Plate Increase=1.60
Uniform Loads (plf)
Vert: 1-2=15, 2-5=3, 5-8=3, 8-9=15, 2-11=-12, 10-11=-52, 8-10=-12
Horz: 1-2=-24, 2-5=-11, 5-8=11, 8-9=24

14) Dead + 0.6 MWFRS Wind (Neg. Internal) 1st Parallel: Lumber Increase=1.60, Plate Increase=1.60
Uniform Loads (plf)
Vert: 1-2=-16, 2-5=-21, 5-8=-21, 8-9=-16, 2-11=-20, 10-11=-60, 8-10=-20
Horz: 1-2=-4, 2-5=1, 5-8=-1, 8-9=4

15) Dead + 0.6 MWFRS Wind (Neg. Internal) 2nd Parallel: Lumber Increase=1.60, Plate Increase=1.60
Uniform Loads (plf)
Vert: 1-2=-16, 2-5=-21, 5-8=-21, 8-9=-16, 2-11=-20, 10-11=-60, 8-10=-20
Horz: 1-2=-4, 2-5=1, 5-8=-1, 8-9=4

16) Dead + Uninhabitable Attic Storage: Lumber Increase=1.25, Plate Increase=1.25
Uniform Loads (plf)
Vert: 1-5=-20, 5-9=-20, 2-11=-40, 11-16=-80, 16-17=-100, 10-17=-80, 8-10=-40

17) Dead + 0.75 Roof Live (bal.) + 0.75 Uninhab. Attic Storage + 0.75(0.6 MWFRS Wind (Neg. Int) Left): Lumber Increase=1.60, Plate Increase=1.60
Uniform Loads (plf)
Vert: 1-2=-53, 2-5=-56, 5-8=-44, 8-9=-40, 2-11=-35, 11-16=-75, 16-17=-90, 10-17=-75, 8-10=-35
Horz: 1-2=3, 2-5=6, 5-8=6, 8-9=10

18) Dead + 0.75 Roof Live (bal.) + 0.75 Uninhab. Attic Storage + 0.75(0.6 MWFRS Wind (Neg. Int) Right): Lumber Increase=1.60, Plate Increase=1.60
Uniform Loads (plf)
Vert: 1-2=-40, 2-5=-44, 5-8=-56, 8-9=-53, 2-11=-35, 11-16=-75, 16-17=-90, 10-17=-75, 8-10=-35
Horz: 1-2=-10, 2-5=-6, 5-8=-6, 8-9=-3

19) Dead + 0.75 Roof Live (bal.) + 0.75 Uninhab. Attic Storage + 0.75(0.6 MWFRS Wind (Neg. Int) 1st Parallel): Lumber Increase=1.60, Plate Increase=1.60
Uniform Loads (plf)
Vert: 1-2=-47, 2-5=-51, 5-8=-51, 8-9=-47, 2-11=-35, 11-16=-75, 16-17=-90, 10-17=-75, 8-10=-35
Horz: 1-2=-3, 2-5=1, 5-8=-1, 8-9=3

20) Dead + 0.75 Roof Live (bal.) + 0.75 Uninhab. Attic Storage + 0.75(0.6 MWFRS Wind (Neg. Int) 2nd Parallel): Lumber Increase=1.60, Plate Increase=1.60
Uniform Loads (plf)
Vert: 1-2=-47, 2-5=-51, 5-8=-51, 8-9=-47, 2-11=-35, 11-16=-75, 16-17=-90, 10-17=-75, 8-10=-35
Horz: 1-2=-3, 2-5=1, 5-8=-1, 8-9=3

21) Dead + 0.6 C-C Wind Min. Down: Lumber Increase=1.60, Plate Increase=1.60
Uniform Loads (plf)
Vert: 1-2=8, 2-5=-25, 5-9=-25, 2-11=-12, 10-11=-52, 8-10=-12
Horz: 1-2=-16, 2-5=16, 5-9=-16

22) Dead + 0.6 C-C Wind Min. Upward: Lumber Increase=1.60, Plate Increase=1.60

Continued on page 3

LOAD CASE(S) Standard

Uniform Loads (plf)

Vert: 1-5=8, 5-9=8, 2-11=-12, 10-11=-52, 8-10=-12

Horz: 1-5=-16, 5-9=16

23) 1st Dead + Roof Live (unbalanced): Lumber Increase=1.25, Plate Increase=1.25

Uniform Loads (plf)

Vert: 1-5=-60, 5-9=-20, 2-11=-20, 10-11=-60, 8-10=-20

24) 2nd Dead + Roof Live (unbalanced): Lumber Increase=1.25, Plate Increase=1.25

Uniform Loads (plf)

Vert: 1-5=-20, 5-9=-60, 2-11=-20, 10-11=-60, 8-10=-20

25) 3rd Dead + 0.75 Roof Live (unbalanced) + 0.75 Uninhab. Attic Storage: Lumber Increase=1.25, Plate Increase=1.25

Uniform Loads (plf)

Vert: 1-5=-50, 5-9=-20, 2-11=-35, 11-16=-75, 16-17=-90, 10-17=-75, 8-10=-35

26) 4th Dead + 0.75 Roof Live (unbalanced) + 0.75 Uninhab. Attic Storage: Lumber Increase=1.25, Plate Increase=1.25

Uniform Loads (plf)

Vert: 1-5=-20, 5-9=-50, 2-11=-35, 11-16=-75, 16-17=-90, 10-17=-75, 8-10=-35

Job	Truss	Truss Type	Qty	Ply	2508-CR-2 Car
6243113	B01X	Common Supported Gable	1	1	T34534222 Job Reference (optional)

Tibbetts Lumber Co., LLC (Ocala, FL), Ocala, FL - 34472, 8.730 s Jul 11 2024 MiTek Industries, Inc. Wed Jul 24 11:27:00 2024 Page 1
ID:Ts3RJ0261_Xu2fYgSyBHAWzZSLZ-fK8gyjA9zivbVyTrcPtG5y9v9vP0Kbz?3lfsY3yuswf

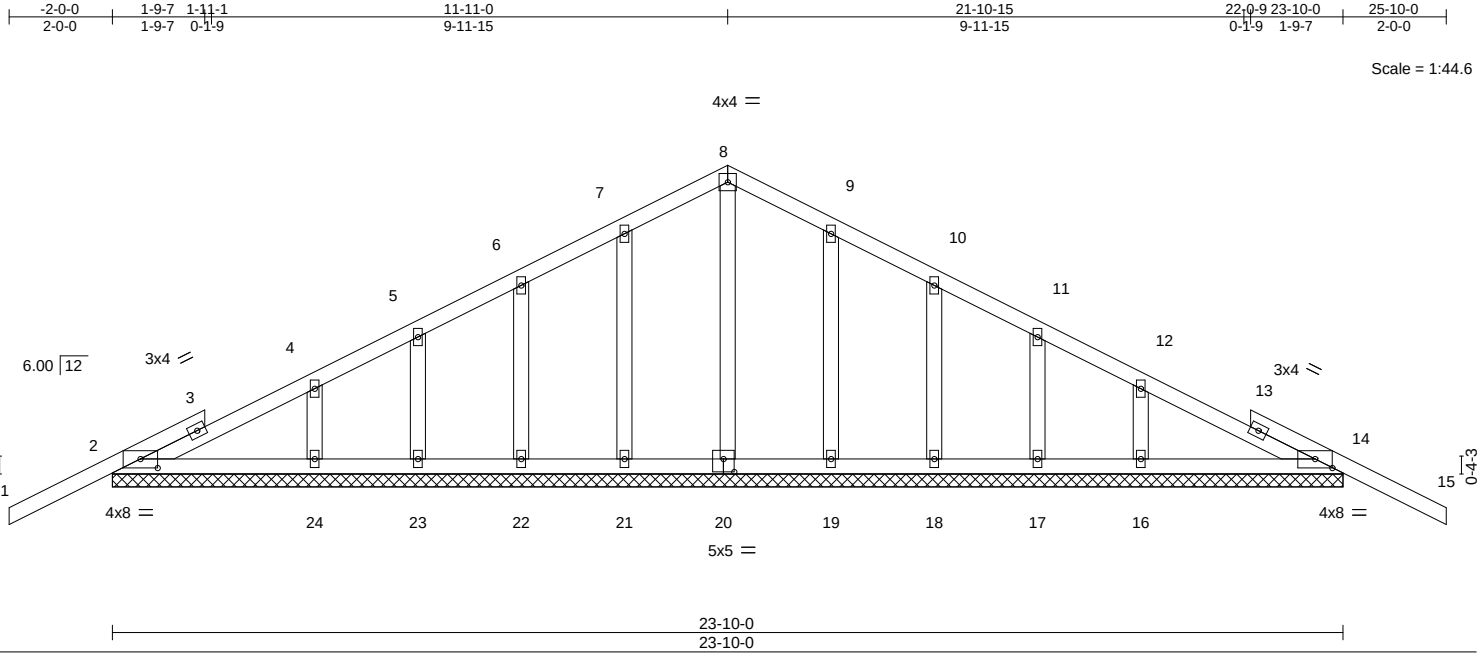

Plate Offsets (X,Y)-- [2:0-4-0,0-2-1], [14:0-4-0,0-2-1], [20:0-2-8,0-3-0]

LOADING (psf)		SPACING- 2-0-0		CSI.		DEFL.	in	(loc)	l/defl	L/d	PLATES	GRIP
TCLL	20.0	Plate Grip DOL	1.25	TC	0.26	Vert(LL)	-0.01	15	n/r	120	MT20	244/190
TCDL	10.0	Lumber DOL	1.25	BC	0.10	Vert(CT)	-0.02	15	n/r	120		
BCLL	0.0 *	Rep Stress Incr	YES	WB	0.07	Horz(CT)	0.00	14	n/a	n/a		
BCDL	10.0	Code FBC2023/TPI2014		Matrix-S							Weight: 129 lb	FT = 20%

LUMBER-
TOP CHORD 2x4 SP No.2
BOT CHORD 2x4 SP No.2
OTHERS 2x4 SP No.2

BRACING-
TOP CHORD Structural wood sheathing directly applied or 6-0-0 oc purlins.
BOT CHORD Rigid ceiling directly applied or 6-0-0 oc bracing.

REACTIONS. All bearings 23-10-0.
(lb) - Max Horz 2=-109(LC 10)
Max Uplift All uplift 100 lb or less at joint(s) 2, 14, 21, 22, 23, 19, 18, 17
Max Grav All reactions 250 lb or less at joint(s) 20, 21, 22, 23, 19, 18, 17 except 2=285(LC 23), 14=286(LC 24), 24=250(LC 23), 16=250(LC 24)

FORCES. (lb) - Max. Comp./Max. Ten. - All forces 250 (lb) or less except when shown.

NOTES-
1) Unbalanced roof live loads have been considered for this design.
2) Wind: ASCE 7-22; Vult=130mph (3-second gust) Vasd=101mph; TCDL=4.2psf; BCDL=6.0psf; h=15ft; B=45ft; L=24ft; eave=2ft; Cat. II; Exp B; Encl., GCpi=0.18; MWFRS (directional) and C-C Zone3 zone; cantilever left and right exposed ;C-C for members and forces & MWFRS for reactions shown; Lumber DOL=1.60 plate grip DOL=1.60
3) Truss designed for wind loads in the plane of the truss only. For studs exposed to wind (normal to the face), see Standard Industry Gable End Details as applicable, or consult qualified building designer as per ANSI/TPI 1.
4) Building Designer / Project engineer responsible for verifying applied roof live load shown covers rain loading requirements specific to the use of this truss component.
5) All plates are 2x4 MT20 unless otherwise indicated.
6) Gable requires continuous bottom chord bearing.
7) Gable studs spaced at 2-0-0 oc.
8) This truss has been designed for a 10.0 psf bottom chord live load nonconcurrent with any other live loads.
9) * This truss has been designed for a live load of 20.0psf on the bottom chord in all areas where a rectangle 3-6-0 tall by 2-0-0 wide will fit between the bottom chord and any other members.
10) Provide mechanical connection (by others) of truss to bearing plate capable of withstanding 100 lb uplift at joint(s) 2, 14, 21, 22, 23, 19, 18, 17.

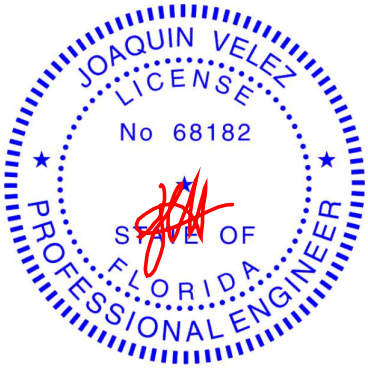

Joaquin Velez PE No.68182
MiTek Inc. DBA MiTek USA FL Cert 6634
16023 Swingley Ridge Rd. Chesterfield, MO 63017

Date:
July 25,2024

Job	Truss	Truss Type	Qty	Ply	2508-CR-2 Car
6243113	B02	Roof Special	1	1	T34534223
					Job Reference (optional)

Tibbetts Lumber Co., LLC (Ocala, FL), Ocala, FL - 34472, 8.730 s Jul 11 2024 MiTek Industries, Inc. Wed Jul 24 11:27:01 2024 Page 1

ID:Ts3RJ0261_Xu2fYgSyBHAWzZSLZ-7Wi2A3Ank01S7611A6OVd9i?rJeH3zq8IPPQ5Wyuswe

-2-0-0	5-0-8	8-4-13	11-11-0	15-5-4	19-2-0	23-9-8
2-0-0	5-0-8	3-4-4	3-6-4	3-6-4	3-8-12	4-7-8

Scale = 1:45.2

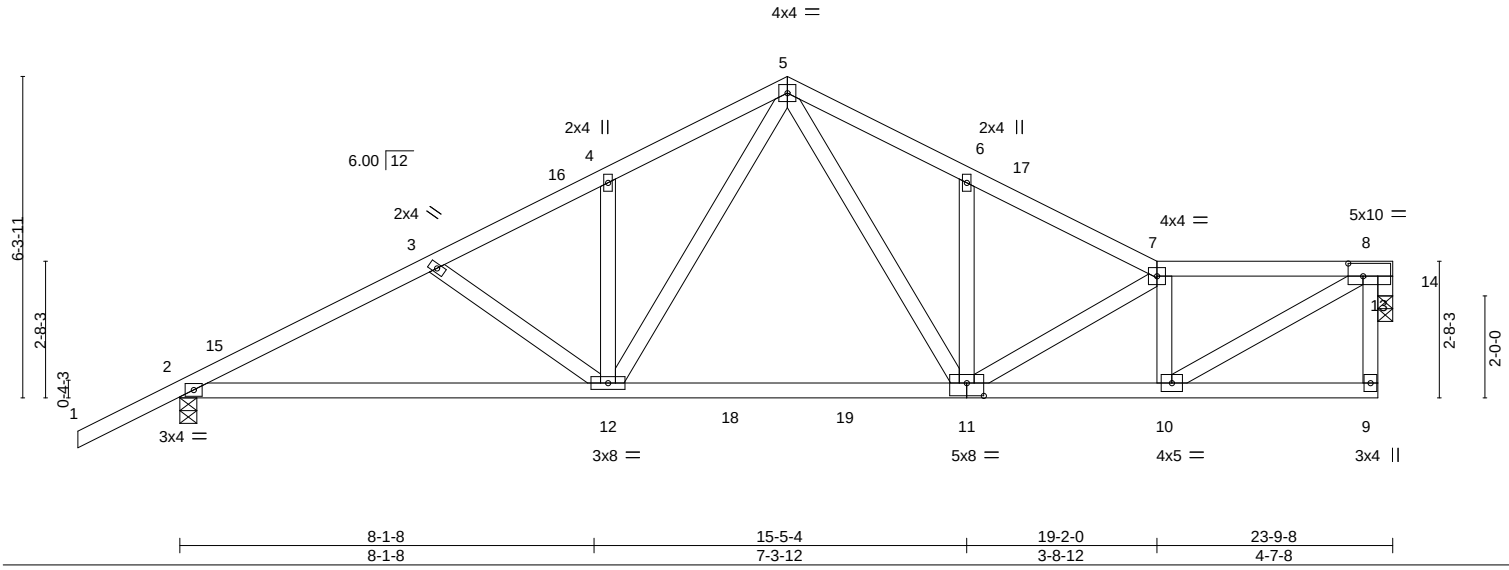

Plate Offsets (X,Y)-- [8:0-3-8,0-3-0], [11:0-4-0,0-3-0]

LOADING (psf)		SPACING- 2-0-0		CSI.		DEFL.	in	(loc)	l/defl	L/d	PLATES	GRIP
TCLL	20.0	Plate Grip DOL	1.25	TC	0.58	Vert(LL)	-0.10	11-12	>999	360	MT20	244/190
TCDL	10.0	Lumber DOL	1.25	BC	0.48	Vert(CT)	-0.31	11-12	>904	240		
BCLL	0.0 *	Rep Stress Incr	NO	WB	0.41	Horz(CT)	0.02	14	n/a	n/a		
BCDL	10.0	Code FBC2023/TPI2014		Matrix-S		Wind(LL)	0.04	11-12	>999	240	Weight: 134 lb	FT = 20%

LUMBER-

TOP CHORD 2x4 SP No.2
BOT CHORD 2x4 SP M 31 or 2x4 SP SS
WEBS 2x4 SP No.2
OTHERS 2x4 SP No.2

BRACING-

TOP CHORD Structural wood sheathing directly applied or 3-11-0 oc purlins, except end verticals.
BOT CHORD Rigid ceiling directly applied or 10-0-0 oc bracing.

REACTIONS. (size) 2=0-4-0, 14=0-3-8
Max Horz 2=92(LC 12)
Max Grav 2=1304(LC 17), 14=1132(LC 19)

FORCES. (lb) - Max. Comp./Max. Ten. - All forces 250 (lb) or less except when shown.
TOP CHORD 2-3=-2085/0, 3-4=-1880/0, 4-5=-1887/0, 5-6=-1870/0, 6-7=-1862/0, 7-8=-1757/0
BOT CHORD 2-12=0/1849, 11-12=0/1227, 10-11=0/1812
WEBS 5-12=0/897, 5-11=0/882, 7-10=-904/0, 8-10=0/1837, 8-14=-1311/0

NOTES-

1) Unbalanced roof live loads have been considered for this design.
2) Wind: ASCE 7-22; Vult=130mph (3-second gust) Vasd=101mph; TCDL=4.2psf; BCDL=6.0psf; h=15ft; B=45ft; L=24ft; eave=4ft; Cat. II; Exp B; Encl., GCpi=0.18; MWFRS (directional) and C-C Zone3 -2-0-0 to 1-0-0, Zone1 1-0-0 to 11-11-0, Zone2 11-11-0 to 16-1-15, Zone1 16-1-15 to 23-4-4 zone; cantilever left and right exposed ;C-C for members and forces & MWFRS for reactions shown; Lumber DOL=1.60 plate grip DOL=1.60
3) Building Designer / Project engineer responsible for verifying applied roof live load shown covers rain loading requirements specific to the use of this truss component.
4) Provide adequate drainage to prevent water ponding.
5) This truss has been designed for a 10.0 psf bottom chord live load nonconcurrent with any other live loads.
6) * This truss has been designed for a live load of 20.0psf on the bottom chord in all areas where a rectangle 3-6-0 tall by 2-0-0 wide will fit between the bottom chord and any other members, with BCDL = 10.0psf.
7) Bearing at joint(s) 14 considers parallel to grain value using ANSI/TPI 1 angle to grain formula. Building designer should verify capacity of bearing surface.
8) Load case(s) 1, 2, 3, 4, 5, 6, 7, 8, 9, 10, 11, 12, 13, 14, 15, 16, 17, 18, 19, 20, 21, 22, 23, 24, 25, 26 has/have been modified. Building designer must review loads to verify that they are correct for the intended use of this truss.

LOAD CASE(S) Standard

1) Dead + Roof Live (balanced): Lumber Increase=1.25, Plate Increase=1.25
Uniform Loads (plf)
Vert: 1-5=-60, 5-7=-60, 7-8=-60, 2-12=-20, 11-12=-60, 9-11=-20
2) Dead + 0.75 Roof Live (balanced) + 0.75 Uninhab. Attic Storage: Lumber Increase=1.25, Plate Increase=1.25
Uniform Loads (plf)
Vert: 1-5=-50, 5-7=-50, 7-8=-50, 2-12=-35, 12-18=-75, 18-19=-90, 11-19=-75, 9-11=-35

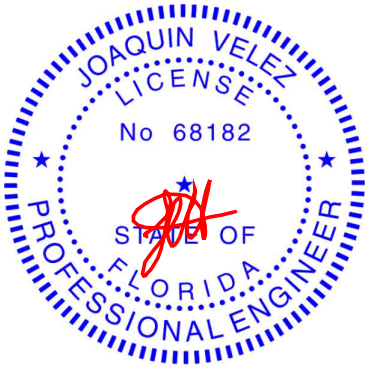

Joaquin Velez PE No.68182
MiTek Inc. DBA MiTek USA FL Cert 6634
16023 Swingley Ridge Rd. Chesterfield, MO 63017

Date:

July 25,2024

Continued on page 2

LOAD CASE(S) Standard

3) Dead + Uninhabitable Attic Without Storage: Lumber Increase=1.25, Plate Increase=1.25
Uniform Loads (plf)
Vert: 1-5=-20, 5-7=-20, 7-8=-20, 2-12=-40, 11-12=-80, 9-11=-40
4) Dead + 0.6 C-C Wind (Pos. Internal) Case 1: Lumber Increase=1.60, Plate Increase=1.60
Uniform Loads (plf)
Vert: 1-2=47, 2-15=32, 5-15=17, 5-17=26, 7-17=17, 7-8=17, 2-12=-12, 11-12=-52, 9-11=-12
Horz: 1-2=-55, 2-15=-40, 5-15=-25, 5-17=35, 7-17=25
Drag: 7-8=-0
5) Dead + 0.6 C-C Wind (Pos. Internal) Case 2: Lumber Increase=1.60, Plate Increase=1.60
Uniform Loads (plf)
Vert: 1-2=12, 2-16=17, 5-16=26, 5-7=17, 7-8=17, 2-12=-12, 11-12=-52, 9-11=-12
Horz: 1-2=-21, 2-16=-25, 5-16=-35, 5-7=25
Drag: 7-8=-0
6) Dead + 0.6 C-C Wind (Neg. Internal) Case 1: Lumber Increase=1.60, Plate Increase=1.60
Uniform Loads (plf)
Vert: 1-2=-8, 2-5=-32, 5-7=-32, 7-8=-32, 2-12=-20, 11-12=-60, 9-11=-20
Horz: 1-2=-12, 2-5=12, 5-7=-12
Drag: 7-8=0
7) Dead + 0.6 C-C Wind (Neg. Internal) Case 2: Lumber Increase=1.60, Plate Increase=1.60
Uniform Loads (plf)
Vert: 1-2=-28, 2-5=-32, 5-7=-32, 7-8=-32, 2-12=-20, 11-12=-60, 9-11=-20
Horz: 1-2=8, 2-5=12, 5-7=-12
Drag: 7-8=0
8) Dead + 0.6 MWFRS Wind (Pos. Internal) Left: Lumber Increase=1.60, Plate Increase=1.60
Uniform Loads (plf)
Vert: 1-2=15, 2-5=3, 5-7=9, 7-8=8, 2-12=-12, 11-12=-52, 9-11=-12
Horz: 1-2=-24, 2-5=-11, 5-7=17
Drag: 7-8=-0
9) Dead + 0.6 MWFRS Wind (Pos. Internal) Right: Lumber Increase=1.60, Plate Increase=1.60
Uniform Loads (plf)
Vert: 1-2=4, 2-5=9, 5-7=3, 7-8=18, 2-12=-12, 11-12=-52, 9-11=-12
Horz: 1-2=-13, 2-5=-17, 5-7=11
Drag: 7-8=-0
10) Dead + 0.6 MWFRS Wind (Neg. Internal) Left: Lumber Increase=1.60, Plate Increase=1.60
Uniform Loads (plf)
Vert: 1-2=-24, 2-5=-28, 5-7=-12, 7-8=-21, 2-12=-20, 11-12=-60, 9-11=-20
Horz: 1-2=4, 2-5=8, 5-7=8
11) Dead + 0.6 MWFRS Wind (Neg. Internal) Right: Lumber Increase=1.60, Plate Increase=1.60
Uniform Loads (plf)
Vert: 1-2=-7, 2-5=-12, 5-7=-28, 7-8=-21, 2-12=-20, 11-12=-60, 9-11=-20
Horz: 1-2=-13, 2-5=-8, 5-7=-8
12) Dead + 0.6 MWFRS Wind (Pos. Internal) 1st Parallel: Lumber Increase=1.60, Plate Increase=1.60
Uniform Loads (plf)
Vert: 1-2=28, 2-5=15, 5-7=15, 7-8=15, 2-12=-12, 11-12=-52, 9-11=-12
Horz: 1-2=-37, 2-5=-24, 5-7=24
Drag: 7-8=-0
13) Dead + 0.6 MWFRS Wind (Pos. Internal) 2nd Parallel: Lumber Increase=1.60, Plate Increase=1.60
Uniform Loads (plf)
Vert: 1-2=15, 2-5=3, 5-7=3, 7-8=3, 2-12=-12, 11-12=-52, 9-11=-12
Horz: 1-2=-24, 2-5=-11, 5-7=11
Drag: 7-8=-0
14) Dead + 0.6 MWFRS Wind (Neg. Internal) 1st Parallel: Lumber Increase=1.60, Plate Increase=1.60
Uniform Loads (plf)
Vert: 1-2=-16, 2-5=-21, 5-7=-21, 7-8=-21, 2-12=-20, 11-12=-60, 9-11=-20
Horz: 1-2=-4, 2-5=1, 5-7=-1
15) Dead + 0.6 MWFRS Wind (Neg. Internal) 2nd Parallel: Lumber Increase=1.60, Plate Increase=1.60
Uniform Loads (plf)
Vert: 1-2=-16, 2-5=-21, 5-7=-21, 7-8=-21, 2-12=-20, 11-12=-60, 9-11=-20
Horz: 1-2=-4, 2-5=1, 5-7=-1
16) Dead + Uninhabitable Attic Storage: Lumber Increase=1.25, Plate Increase=1.25
Uniform Loads (plf)
Vert: 1-5=-20, 5-7=-20, 7-8=-20, 2-12=-40, 12-18=-80, 18-19=-100, 11-19=-80, 9-11=-40
17) Dead + 0.75 Roof Live (bal.) + 0.75 Uninhab. Attic Storage + 0.75(0.6 MWFRS Wind (Neg. Int) Left): Lumber Increase=1.60, Plate Increase=1.60
Uniform Loads (plf)
Vert: 1-2=-53, 2-5=-56, 5-7=-44, 7-8=-51, 2-12=-35, 12-18=-75, 18-19=-90, 11-19=-75, 9-11=-35
Horz: 1-2=3, 2-5=6, 5-7=6
18) Dead + 0.75 Roof Live (bal.) + 0.75 Uninhab. Attic Storage + 0.75(0.6 MWFRS Wind (Neg. Int) Right): Lumber Increase=1.60, Plate Increase=1.60
Uniform Loads (plf)
Vert: 1-2=-40, 2-5=-44, 5-7=-56, 7-8=-51, 2-12=-35, 12-18=-75, 18-19=-90, 11-19=-75, 9-11=-35
Horz: 1-2=-10, 2-5=-6, 5-7=-6
19) Dead + 0.75 Roof Live (bal.) + 0.75 Uninhab. Attic Storage + 0.75(0.6 MWFRS Wind (Neg. Int) 1st Parallel): Lumber Increase=1.60, Plate Increase=1.60

Continued on page 3

LOAD CASE(S) Standard

Uniform Loads (plf)
Vert: 1-2=-47, 2-5=-51, 5-7=-51, 7-8=-51, 2-12=-35, 12-18=-75, 18-19=-90, 11-19=-75, 9-11=-35
Horz: 1-2=-3, 2-5=1, 5-7=-1

20) Dead + 0.75 Roof Live (bal.) + 0.75 Uninhab. Attic Storage + 0.75(0.6 MWFRS Wind (Neg. Int) 2nd Parallel): Lumber Increase=1.60, Plate Increase=1.60
Uniform Loads (plf)
Vert: 1-2=-47, 2-5=-51, 5-7=-51, 7-8=-51, 2-12=-35, 12-18=-75, 18-19=-90, 11-19=-75, 9-11=-35
Horz: 1-2=-3, 2-5=1, 5-7=-1

21) Dead + 0.6 C-C Wind Min. Down: Lumber Increase=1.60, Plate Increase=1.60
Uniform Loads (plf)
Vert: 1-2=8, 2-5=-25, 5-7=-25, 7-8=-25, 2-12=-12, 11-12=-52, 9-11=-12
Horz: 1-2=-16, 2-5=16, 5-7=-16
Drag: 7-8=0

22) Dead + 0.6 C-C Wind Min. Upward: Lumber Increase=1.60, Plate Increase=1.60
Uniform Loads (plf)
Vert: 1-5=8, 5-7=8, 7-8=8, 2-12=-12, 11-12=-52, 9-11=-12
Horz: 1-5=-16, 5-7=16
Drag: 7-8=-0

23) 1st Dead + Roof Live (unbalanced): Lumber Increase=1.25, Plate Increase=1.25
Uniform Loads (plf)
Vert: 1-5=-60, 5-7=-20, 7-8=-20, 2-12=-20, 11-12=-60, 9-11=-20

24) 2nd Dead + Roof Live (unbalanced): Lumber Increase=1.25, Plate Increase=1.25
Uniform Loads (plf)
Vert: 1-5=-20, 5-7=-60, 7-8=-60, 2-12=-20, 11-12=-60, 9-11=-20

25) 3rd Dead + 0.75 Roof Live (unbalanced) + 0.75 Uninhab. Attic Storage: Lumber Increase=1.25, Plate Increase=1.25
Uniform Loads (plf)
Vert: 1-5=-50, 5-7=-20, 7-8=-20, 2-12=-35, 12-18=-75, 18-19=-90, 11-19=-75, 9-11=-35

26) 4th Dead + 0.75 Roof Live (unbalanced) + 0.75 Uninhab. Attic Storage: Lumber Increase=1.25, Plate Increase=1.25
Uniform Loads (plf)
Vert: 1-5=-20, 5-7=-50, 7-8=-50, 2-12=-35, 12-18=-75, 18-19=-90, 11-19=-75, 9-11=-35

Job	Truss	Truss Type	Qty	Ply	2508-CR-2 Car
6243113	C1	Corner Jack	4	1	T34534224 Job Reference (optional)

Tibbetts Lumber Co., LLC (Ocala, FL), Ocala, FL - 34472, 8.730 s Jul 11 2024 MiTek Industries, Inc. Wed Jul 24 11:27:01 2024 Page 1
ID:Ts3RJ0261_Xu2fYgSyBHAWzZSLZ-7Wi2A3Ank01S7611A6OVd9i4WJle33G8IPPQ5Wyuswe

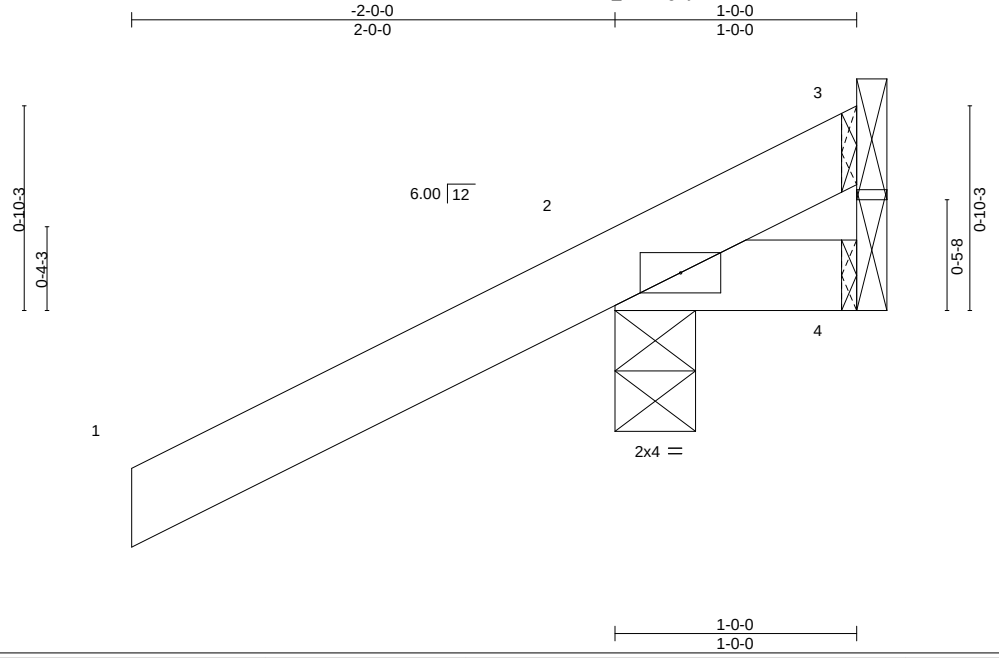

LOADING (psf)		SPACING- 2-0-0		CSI.		DEFL. in (loc) l/defl L/d		PLATES GRIP
TCLL	20.0	Plate Grip DOL	1.25	TC	0.29	Vert(LL) -0.00 2 >999 360		MT20 244/190
TCDL	10.0	Lumber DOL	1.25	BC	0.01	Vert(CT) -0.00 2 >999 240		
BCLL	0.0 *	Rep Stress Incr	YES	WB	0.00	Horz(CT) -0.00 3 n/a n/a		
BCDL	10.0	Code FBC2023/TPI2014		Matrix-P		Wind(LL) 0.00 2 **** 240		Weight: 7 lb FT = 20%

LUMBER-
TOP CHORD 2x4 SP No.2
BOT CHORD 2x4 SP No.2

BRACING-
TOP CHORD Structural wood sheathing directly applied or 1-0-0 oc purlins.
BOT CHORD Rigid ceiling directly applied or 10-0-0 oc bracing.

REACTIONS. (size) 3=Mechanical, 2=0-4-0, 4=Mechanical
Max Horz 2=48(LC 12)
Max Uplift 3=-101(LC 1), 2=-134(LC 12)
Max Grav 3=68(LC 12), 2=290(LC 1), 4=19(LC 3)

FORCES. (lb) - Max. Comp./Max. Ten. - All forces 250 (lb) or less except when shown.

NOTES-
1) Wind: ASCE 7-22; Vult=130mph (3-second gust) Vasd=101mph; TCDL=4.2psf; BCDL=6.0psf; h=15ft; B=45ft; L=24ft; eave=4ft; Cat. II; Exp B; Encl., GCpi=0.18; MWFRS (directional) and C-C Zone3 zone; cantilever left and right exposed ;C-C for members and forces & MWFRS for reactions shown; Lumber DOL=1.60 plate grip DOL=1.60
2) Building Designer / Project engineer responsible for verifying applied roof live load shown covers rain loading requirements specific to the use of this truss component.
3) This truss has been designed for a 10.0 psf bottom chord live load nonconcurrent with any other live loads.
4) * This truss has been designed for a live load of 20.0psf on the bottom chord in all areas where a rectangle 3-6-0 tall by 2-0-0 wide will fit between the bottom chord and any other members.
5) Refer to girder(s) for truss to truss connections.
6) Provide mechanical connection (by others) of truss to bearing plate capable of withstanding 100 lb uplift at joint(s) except (jt=lb) 3=101, 2=134.

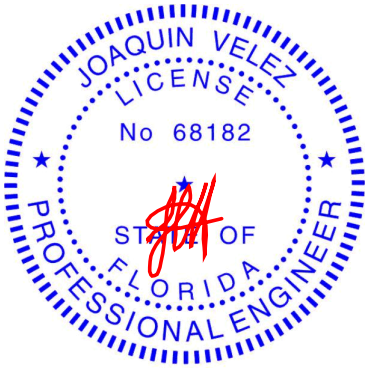

Joaquin Velez PE No.68182
MiTek Inc. DBA MiTek USA FL Cert 6634
16023 Swingley Ridge Rd. Chesterfield, MO 63017
Date:
July 25,2024

MiTek®
16023 Swingley Ridge Rd.
Chesterfield, MO 63017
314.434.1200 / MiTek-US.com

Job	Truss	Truss Type	Qty	Ply	2508-CR-2 Car
6243113	C3	Corner Jack	4	1	T34534225 Job Reference (optional)

Tibbetts Lumber Co., LLC (Ocala, FL), Ocala, FL - 34472, 8.730 s Jul 11 2024 MiTek Industries, Inc. Wed Jul 24 11:27:02 2024 Page 1
ID:Ts3RJ0261_Xu2fYgSyBHAWzZSLZ-biGQNPBQVJ9JlGcEkpvkANFEWj4goWWIW38zdyyuswd

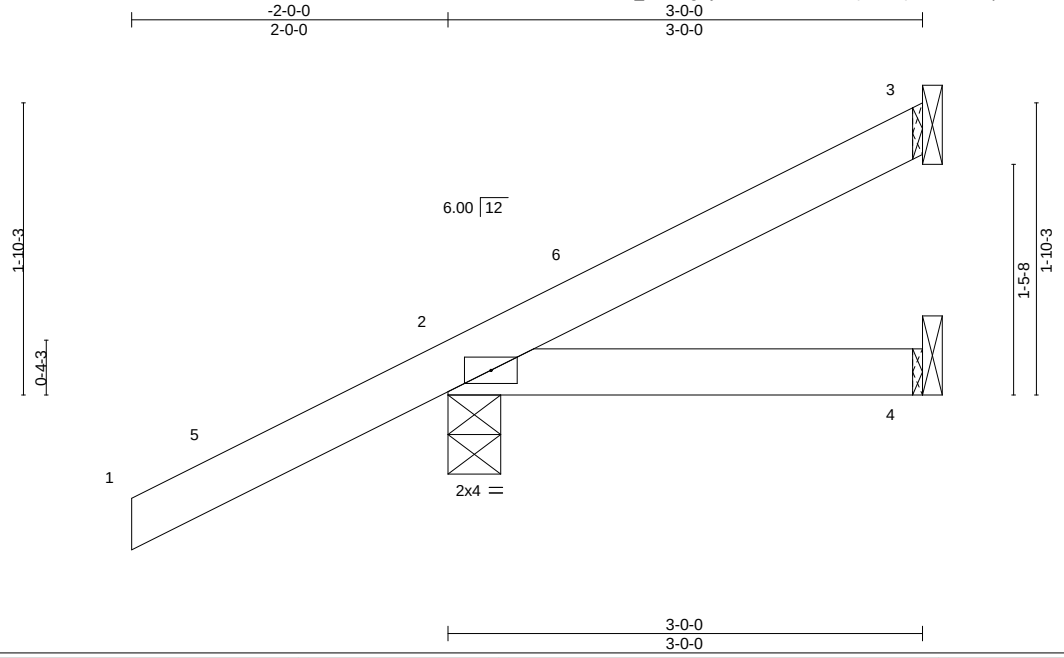

LOADING (psf)			SPACING- 2-0-0		CSI.		DEFL. in (loc) l/defl L/d					PLATES	GRIP
TCLL	20.0		Plate Grip DOL	1.25	TC	0.33	Vert(LL)	-0.00	2-4	>999	360	MT20	244/190
TCDL	10.0		Lumber DOL	1.25	BC	0.09	Vert(CT)	-0.01	2-4	>999	240		
BCLL	0.0	*	Rep Stress Incr	YES	WB	0.00	Horz(CT)	-0.00	3	n/a	n/a		
BCDL	10.0		Code FBC2023/TPI2014		Matrix-P		Wind(LL)	0.00	2	****	240	Weight: 13 lb	FT = 20%

LUMBER-
TOP CHORD 2x4 SP No.2
BOT CHORD 2x4 SP No.2

BRACING-
TOP CHORD Structural wood sheathing directly applied or 3-0-0 oc purlins.
BOT CHORD Rigid ceiling directly applied or 10-0-0 oc bracing.

REACTIONS. (size) 3=Mechanical, 2=0-4-0, 4=Mechanical
Max Horz 2=71(LC 12)
Max Uplift 3=-14(LC 9), 2=-86(LC 12)
Max Grav 3=35(LC 17), 2=292(LC 1), 4=55(LC 3)

FORCES. (lb) - Max. Comp./Max. Ten. - All forces 250 (lb) or less except when shown.

NOTES-
1) Wind: ASCE 7-22; Vult=130mph (3-second gust) Vasd=101mph; TCDL=4.2psf; BCDL=6.0psf; h=15ft; B=45ft; L=24ft; eave=4ft; Cat. II; Exp B; Encl., GCpi=0.18; MWFRS (directional) and C-C Zone3 -2-0-0 to 1-0-0, Zone1 1-0-0 to 2-11-4 zone; cantilever left and right exposed ;C-C for members and forces & MWFRS for reactions shown; Lumber DOL=1.60 plate grip DOL=1.60
2) Building Designer / Project engineer responsible for verifying applied roof live load shown covers rain loading requirements specific to the use of this truss component.
3) This truss has been designed for a 10.0 psf bottom chord live load nonconcurrent with any other live loads.
4) * This truss has been designed for a live load of 20.0psf on the bottom chord in all areas where a rectangle 3-6-0 tall by 2-0-0 wide will fit between the bottom chord and any other members.
5) Refer to girder(s) for truss to truss connections.
6) Provide mechanical connection (by others) of truss to bearing plate capable of withstanding 100 lb uplift at joint(s) 3, 2.

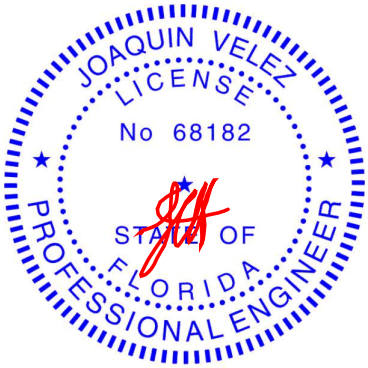

Joaquin Velez PE No.68182
MiTek Inc. DBA MiTek USA FL Cert 6634
16023 Swingley Ridge Rd. Chesterfield, MO 63017
Date:

July 25,2024

MiTek®
16023 Swingley Ridge Rd.
Chesterfield, MO 63017
314.434.1200 / MiTek-US.com

Job	Truss	Truss Type	Qty	Ply	2508-CR-2 Car
6243113	C5	Corner Jack	4	1	T34534226
					Job Reference (optional)

Tibbetts Lumber Co., LLC (Ocala, FL), Ocala, FL - 34472, 8.730 s Jul 11 2024 MiTek Industries, Inc. Wed Jul 24 11:27:02 2024 Page 1

ID:Ts3RJ0261_Xu2fYgSyBHAWzZSLZ-biGQNPBQVJ9JlGcEkpvkANFFkj1doWWIW38zdyyuswd

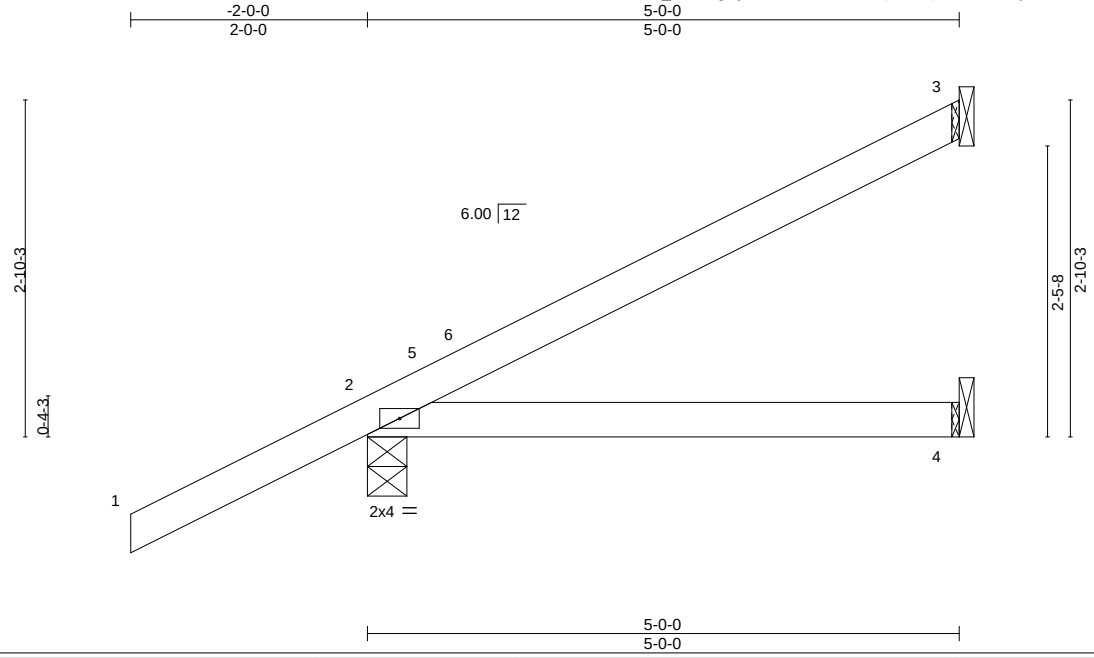

LOADING (psf)			SPACING- 2-0-0		CSI.		DEFL.	in	(loc)	l/defl	L/d	PLATES	GRIP
TCLL	20.0		Plate Grip DOL	1.25	TC	0.32	Vert(LL)	-0.03	2-4	>999	360	MT20	244/190
TCDL	10.0		Lumber DOL	1.25	BC	0.28	Vert(CT)	-0.06	2-4	>921	240		
BCLL	0.0	*	Rep Stress Incr	YES	WB	0.00	Horz(CT)	-0.00	3	n/a	n/a		
BCDL	10.0		Code FBC2023/TPI2014		Matrix-P		Wind(LL)	0.00	2	****	240	Weight: 19 lb	FT = 20%

LUMBER-
TOP CHORD 2x4 SP No.2
BOT CHORD 2x4 SP No.2

BRACING-
TOP CHORD Structural wood sheathing directly applied or 5-0-0 oc purlins.
BOT CHORD Rigid ceiling directly applied or 10-0-0 oc bracing.

REACTIONS. (size) 3=Mechanical, 2=0-4-0, 4=Mechanical
Max Horz 2=95(LC 12)
Max Uplift 3=-35(LC 12), 2=-71(LC 12)
Max Grav 3=114(LC 1), 2=350(LC 1), 4=95(LC 3)

FORCES. (lb) - Max. Comp./Max. Ten. - All forces 250 (lb) or less except when shown.

NOTES-
1) Wind: ASCE 7-22; Vult=130mph (3-second gust) Vasd=101mph; TCDL=4.2psf; BCDL=6.0psf; h=15ft; B=45ft; L=24ft; eave=4ft; Cat. II; Exp B; Encl., GCpi=0.18; MWFRS (directional) and C-C Zone3 -2-0-0 to 1-0-0, Zone1 1-0-0 to 4-11-4 zone; cantilever left and right exposed ;C-C for members and forces & MWFRS for reactions shown; Lumber DOL=1.60 plate grip DOL=1.60
2) Building Designer / Project engineer responsible for verifying applied roof live load shown covers rain loading requirements specific to the use of this truss component.
3) This truss has been designed for a 10.0 psf bottom chord live load nonconcurrent with any other live loads.
4) * This truss has been designed for a live load of 20.0psf on the bottom chord in all areas where a rectangle 3-6-0 tall by 2-0-0 wide will fit between the bottom chord and any other members.
5) Refer to girder(s) for truss to truss connections.
6) Provide mechanical connection (by others) of truss to bearing plate capable of withstanding 100 lb uplift at joint(s) 3, 2.

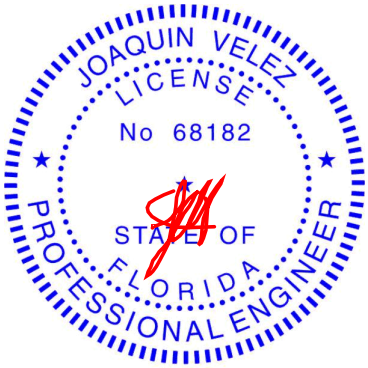

Joaquin Velez PE No.68182
MiTek Inc. DBA MiTek USA FL Cert 6634
16023 Swingley Ridge Rd. Chesterfield, MO 63017
Date:

July 25,2024

MiTek®
16023 Swingley Ridge Rd.
Chesterfield, MO 63017
314.434.1200 / MiTek-US.com

Job	Truss	Truss Type	Qty	Ply	2508-CR-2 Car
6243113	E01	Roof Special	2	1	T34534227 Job Reference (optional)

Tibbetts Lumber Co., LLC (Ocala, FL), Ocala, FL - 34472, 8.730 s Jul 11 2024 MiTek Industries, Inc. Wed Jul 24 11:27:03 2024 Page 1

ID:Ts3RJ0261_Xu2fYgSyBHAWzZSLZ-3vqoblC2GdHAMQBQIXQzjanND6L8XttRljuW9Oyuswc

-2-0-0	4-4-12	8-0-4	8-8-0	14-11-4	21-4-0	23-4-0
2-0-0	4-4-12	3-7-8	0-7-12	6-3-4	6-4-12	2-0-0

Scale = 1:44.7

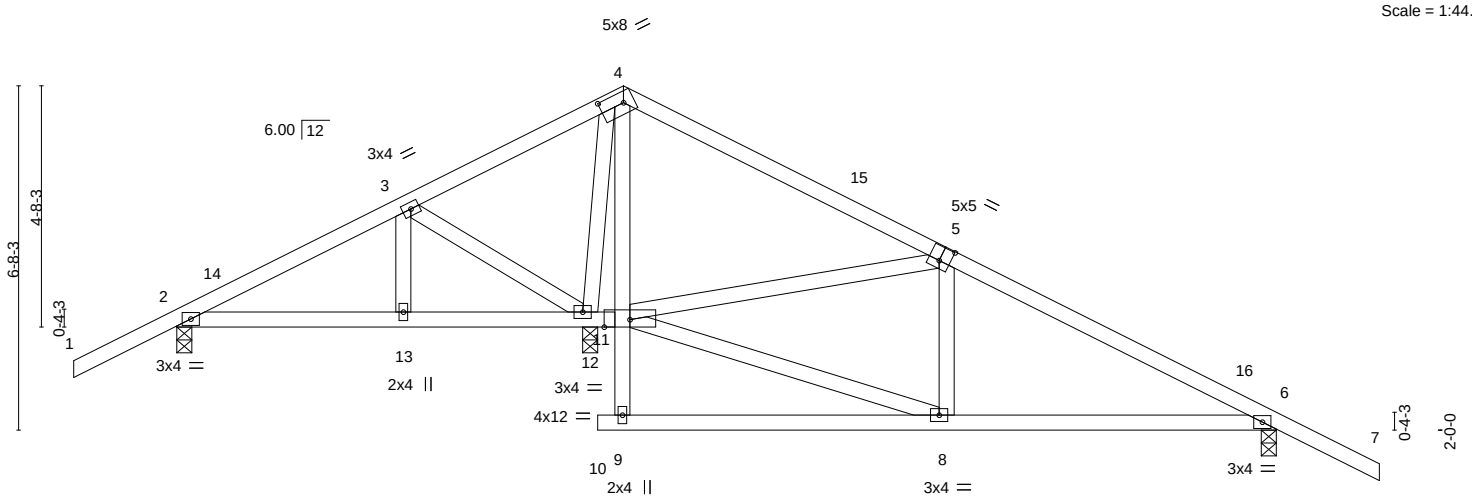

4-7-4	8-0-4	8-6-0	14-8-12	21-4-0
4-7-4	3-5-0	0-5-12	6-2-12	6-7-4

Plate Offsets (X,Y)-- [4:0-5-8,0-2-8], [5:0-2-8,0-3-4]

LOADING (psf)		**SPACING-** 2-0-0	**CSI.**		**DEFL.** in (loc) l/defl L/d	**PLATES**	**GRIP**
TCLL	20.0	Plate Grip DOL 1.25	TC	0.46	Vert(LL) -0.04 6-8 >999 360	MT20	244/190
TCDL	10.0	Lumber DOL 1.25	BC	0.39	Vert(CT) -0.08 6-8 >999 240		
BCLL	0.0 *	Rep Stress Incr YES	WB	0.44	Horz(CT) 0.00 6 n/a n/a		
BCDL	10.0	Code FBC2023/TPI2014	Matrix-S		Wind(LL) -0.01 6-8 >999 240	Weight: 121 lb	FT = 20%

LUMBER-

TOP CHORD 2x4 SP No.2
BOT CHORD 2x4 SP No.2
WEBS 2x4 SP No.2

BRACING-

TOP CHORD Structural wood sheathing directly applied or 6-0-0 oc purlins.
BOT CHORD Rigid ceiling directly applied or 6-0-0 oc bracing. Except:
10-0-0 oc bracing: 9-11

REACTIONS. (size) 2=0-3-8, 6=0-3-8, 12=0-3-8
Max Horz 2=-104(LC 10)
Max Uplift 2=-96(LC 12), 6=-106(LC 12)
Max Grav 2=362(LC 23), 6=593(LC 24), 12=1057(LC 1)

FORCES. (lb) - Max. Comp./Max. Ten. - All forces 250 (lb) or less except when shown.
TOP CHORD 3-4=0/357, 4-5=0/265, 5-6=-602/99
BOT CHORD 6-8=-16/463
WEBS 3-12=-348/79, 8-11=-34/448, 5-11=-620/136, 4-12=-603/45

NOTES-

1) Unbalanced roof live loads have been considered for this design.
2) Wind: ASCE 7-22; Vult=130mph (3-second gust) Vasd=101mph; TCDL=4.2psf; BCDL=6.0psf; h=15ft; B=45ft; L=24ft; eave=4ft; Cat. II; Exp B; Encl., GCpi=0.18; MWFRS (directional) and C-C Zone3 -2-0-0 to 1-0-0, Zone1 1-0-0 to 8-7-12, Zone2 8-7-12 to 12-10-11, Zone1 12-10-11 to 23-4-0 zone; cantilever left and right exposed ;C-C for members and forces & MWFRS for reactions shown; Lumber DOL=1.60 plate grip DOL=1.60
3) Building Designer / Project engineer responsible for verifying applied roof live load shown covers rain loading requirements specific to the use of this truss component.
4) This truss has been designed for a 10.0 psf bottom chord live load nonconcurrent with any other live loads.
5) * This truss has been designed for a live load of 20.0psf on the bottom chord in all areas where a rectangle 3-6-0 tall by 2-0-0 wide will fit between the bottom chord and any other members.
6) Provide mechanical connection (by others) of truss to bearing plate capable of withstanding 100 lb uplift at joint(s) 2 except (jt=lb) 6=106.

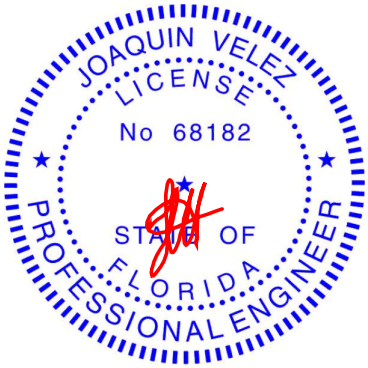

Joaquin Velez PE No.68182
MiTek Inc. DBA MiTek USA FL Cert 6634
16023 Swingley Ridge Rd. Chesterfield, MO 63017

Date:

July 25,2024

Job	Truss	Truss Type	Qty	Ply	2508-CR-2 Car
6243113	E01X	GABLE	1	1	T34534228 Job Reference (optional)

Tibbetts Lumber Co., LLC (Ocala, FL), Ocala, FL - 34472, 8.730 s Jul 11 2024 MiTek Industries, Inc. Wed Jul 24 11:27:03 2024 Page 1

ID:Ts3RJ0261_Xu2fYgSyBHAWzZSLZ-3vqoblC2GdHAMQBQIXQzjanMR6LuXsTRljuW9Oyuswc

-2-0-0	1-9-7	1-11-1	4-7-4	8-8-0	14-8-12	19-4-15	19-6-8	21-4-0	23-4-0
2-0-0	1-9-7	0-1-9	2-8-3	4-0-12	6-0-12	4-8-3	0-1-9	1-9-7	2-0-0

Scale = 1:42.5

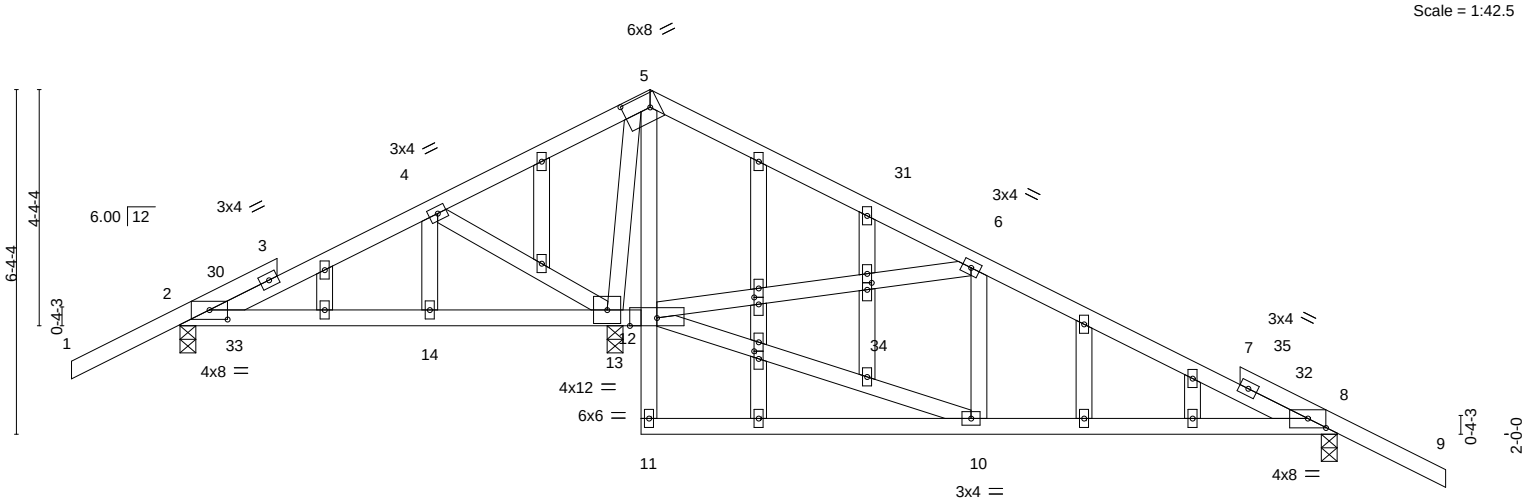

1-9-7	1-11-1	4-7-4	7-10-8	8-6-0	14-8-12	19-4-15	19-6-8	21-4-0
1-9-7	0-1-9	2-8-3	3-3-4	0-7-8	6-2-12	4-8-3	0-1-9	1-9-7

Plate Offsets (X,Y)-- [2:0-4-0,0-2-1], [5:0-5-14,0-3-0], [8:0-4-0,0-2-1], [20:0-1-9,0-1-0], [22:0-1-11,0-1-0], [25:0-1-9,0-1-0]

LOADING (psf)		SPACING-	2-0-0	CSI.		DEFL.	in	(loc)	l/defl	L/d	PLATES	GRIP
TCLL	20.0	Plate Grip DOL	1.25	TC	0.51	Vert(LL)	-0.04	8-10	>999	360	MT20	244/190
TCDL	10.0	Lumber DOL	1.25	BC	0.41	Vert(CT)	-0.10	8-10	>999	240		
BCLL	0.0 *	Rep Stress Incr	YES	WB	0.47	Horz(CT)	-0.00	8	n/a	n/a		
BCDL	10.0	Code FBC2023/TPI2014		Matrix-S		Wind(LL)	0.05	8-10	>999	240	Weight: 141 lb	FT = 20%

LUMBER-

TOP CHORD	2x4 SP No.2
BOT CHORD	2x4 SP No.2
WEBS	2x4 SP No.2
OTHERS	2x4 SP No.2

BRACING-

TOP CHORD	Structural wood sheathing directly applied or 6-0-0 oc purlins.
BOT CHORD	Rigid ceiling directly applied or 6-0-0 oc bracing.

REACTIONS. (size) 2=0-3-8, 8=0-3-8, 13=0-3-8
Max Horz 2=173(LC 11)
Max Uplift 2=-115(LC 12), 8=-187(LC 12), 13=-254(LC 12)
Max Grav 2=328(LC 23), 8=562(LC 24), 13=1141(LC 1)

FORCES. (lb) - Max. Comp./Max. Ten. - All forces 250 (lb) or less except when shown.

TOP CHORD	2-4=-91/261, 4-5=-101/522, 5-6=-76/405, 6-8=-548/220
BOT CHORD	12-13=-355/225, 8-10=-134/439
WEBS	10-12=-131/438, 6-12=-709/336, 4-13=-366/173, 5-13=-692/186

NOTES-

1) Unbalanced roof live loads have been considered for this design.
2) Wind: ASCE 7-22; Vult=130mph (3-second gust) Vasd=101mph; TCDL=4.2psf; BCDL=6.0psf; h=15ft; B=45ft; L=24ft; eave=4ft; Cat. II; Exp B; Encl., GCpi=0.18; MWFRS (directional) and C-C Zone3 -2-0-0 to 1-0-0, Zone1 1-0-0 to 8-7-12, Zone2 8-7-12 to 12-10-11, Zone1 12-10-11 to 23-4-0 zone; cantilever left and right exposed ; porch left and right exposed;C-C for members and forces & MWFRS for reactions shown; Lumber DOL=1.60 plate grip DOL=1.60
3) Truss designed for wind loads in the plane of the truss only. For studs exposed to wind (normal to the face), see Standard Industry Gable End Details as applicable, or consult qualified building designer as per ANSI/TPI 1.
4) Building Designer / Project engineer responsible for verifying applied roof live load shown covers rain loading requirements specific to the use of this truss component.
5) All plates are 2x4 MT20 unless otherwise indicated.
6) Gable studs spaced at 2-0-0 oc.
7) This truss has been designed for a 10.0 psf bottom chord live load nonconcurrent with any other live loads.
8) * This truss has been designed for a live load of 20.0psf on the bottom chord in all areas where a rectangle 3-6-0 tall by 2-0-0 wide will fit between the bottom chord and any other members.
9) Provide mechanical connection (by others) of truss to bearing plate capable of withstanding 100 lb uplift at joint(s) except (jt=lb) 2=115, 8=187, 13=254.

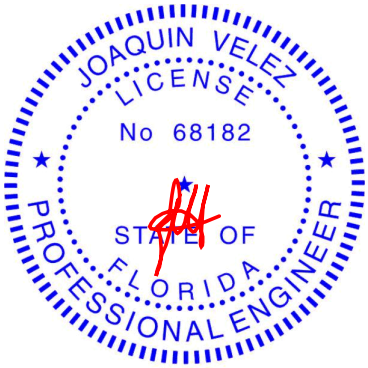

Joaquin Velez PE No.68182
MiTek Inc. DBA MiTek USA FL Cert 6634
16023 Swingley Ridge Rd. Chesterfield, MO 63017
Date:

July 25,2024

Job	Truss	Truss Type	Qty	Ply	2508-CR-2 Car
6243113	E02	Monopitch	3	1	T34534229
					Job Reference (optional)

Tibbetts Lumber Co., LLC (Ocala, FL), Ocala, FL - 34472, 8.730 s Jul 11 2024 MiTek Industries, Inc. Wed Jul 24 11:27:04 2024 Page 1

ID:Ts3RJ0261_Xu2fYgSyBHAWzZSLZ-X5OAo5Dg1xP1_amcrEyCFoKadWhIGPda_Nd4hryuswb

-2-0-0 / 2-0-0 | 4-2-8 / 4-2-8 | 8-2-0 / 3-11-8

Scale = 1:28.8

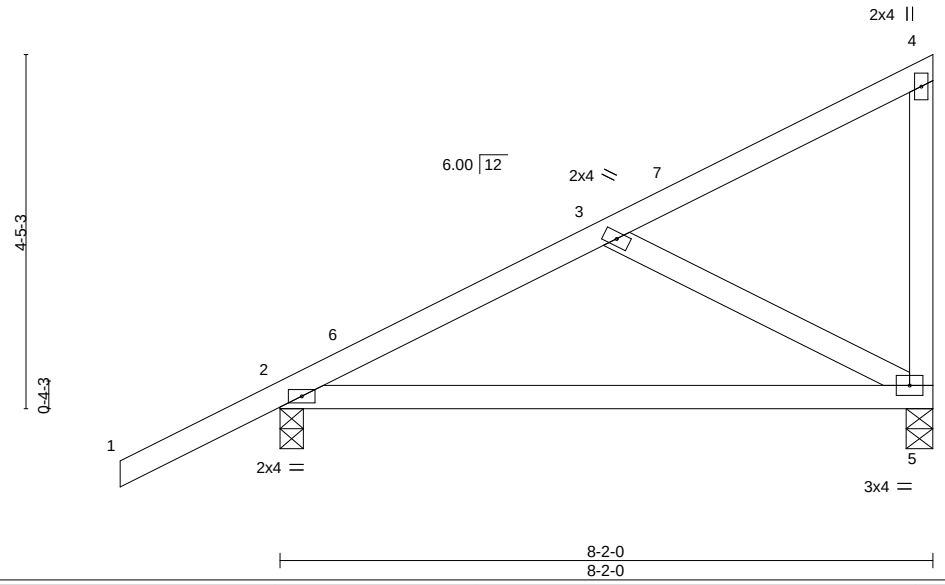

LOADING (psf)			SPACING- 2-0-0		CSI.		DEFL.	in	(loc)	l/defl	L/d	PLATES	GRIP
TCLL	20.0		Plate Grip DOL	1.25	TC	0.36	Vert(LL)	-0.18	2-5	>527	360	MT20	244/190
TCDL	10.0		Lumber DOL	1.25	BC	0.40	Vert(CT)	-0.36	2-5	>263	240		
BCLL	0.0	*	Rep Stress Incr	YES	WB	0.09	Horz(CT)	0.00	5	n/a	n/a		
BCDL	10.0		Code FBC2023/TPI2014		Matrix-P		Wind(LL)	0.00	2	****	240	Weight: 41 lb	FT = 20%

LUMBER-

TOP CHORD 2x4 SP No.2
BOT CHORD 2x4 SP M 31 or 2x4 SP SS
WEBS 2x4 SP No.2

BRACING-

TOP CHORD Structural wood sheathing directly applied or 6-0-0 oc purlins, except end verticals.
BOT CHORD Rigid ceiling directly applied or 10-0-0 oc bracing.

REACTIONS. (size) 5=0-4-0, 2=0-3-8
Max Horz 2=132(LC 12)
Max Uplift 5=-28(LC 12), 2=-60(LC 12)
Max Grav 5=297(LC 1), 2=461(LC 1)

FORCES. (lb) - Max. Comp./Max. Ten. - All forces 250 (lb) or less except when shown.
TOP CHORD 2-3=-322/70
WEBS 3-5=-259/240

NOTES-

1) Wind: ASCE 7-22; Vult=130mph (3-second gust) Vasd=101mph; TCDL=4.2psf; BCDL=6.0psf; h=15ft; B=45ft; L=24ft; eave=4ft; Cat. II; Exp B; Encl., GCpi=0.18; MWFRS (directional) and C-C Zone3 -2-0-0 to 1-0-0, Zone1 1-0-0 to 8-0-4 zone; cantilever left and right exposed ;C-C for members and forces & MWFRS for reactions shown; Lumber DOL=1.60 plate grip DOL=1.60
2) Building Designer / Project engineer responsible for verifying applied roof live load shown covers rain loading requirements specific to the use of this truss component.
3) This truss has been designed for a 10.0 psf bottom chord live load nonconcurrent with any other live loads.
4) * This truss has been designed for a live load of 20.0psf on the bottom chord in all areas where a rectangle 3-6-0 tall by 2-0-0 wide will fit between the bottom chord and any other members.
5) Provide mechanical connection (by others) of truss to bearing plate capable of withstanding 100 lb uplift at joint(s) 5, 2.

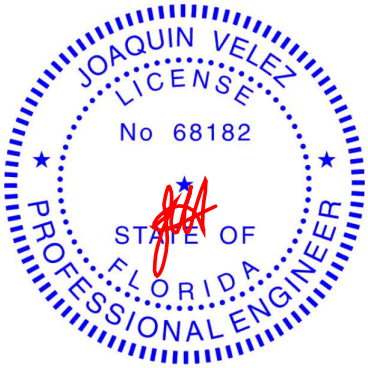

Joaquin Velez PE No.68182
MiTek Inc. DBA MiTek USA FL Cert 6634
16023 Swingley Ridge Rd. Chesterfield, MO 63017

Date:

July 25,2024

Job	Truss	Truss Type	Qty	Ply	2508-CR-2 Car
6243113	E02X	GABLE	1	1	T34534230 Job Reference (optional)

Tibbetts Lumber Co., LLC (Ocala, FL), Ocala, FL - 34472, 8.730 s Jul 11 2024 MiTek Industries, Inc. Wed Jul 24 11:27:04 2024 Page 1
ID:Ts3RJ0261_Xu2fYgSyBHAWzZSLZ-X5OAo5Dg1xP1_amcrEyCFoKadWhJGQ?a_Nd4hryuswb

-2-0-0	1-9-7	1-11-1	4-1-0	6-2-15	6-4-9	8-2-0	10-2-0
2-0-0	1-9-7	0-1-9	2-1-15	2-1-15	0-1-9	1-9-7	2-0-0

Scale = 1:22.5

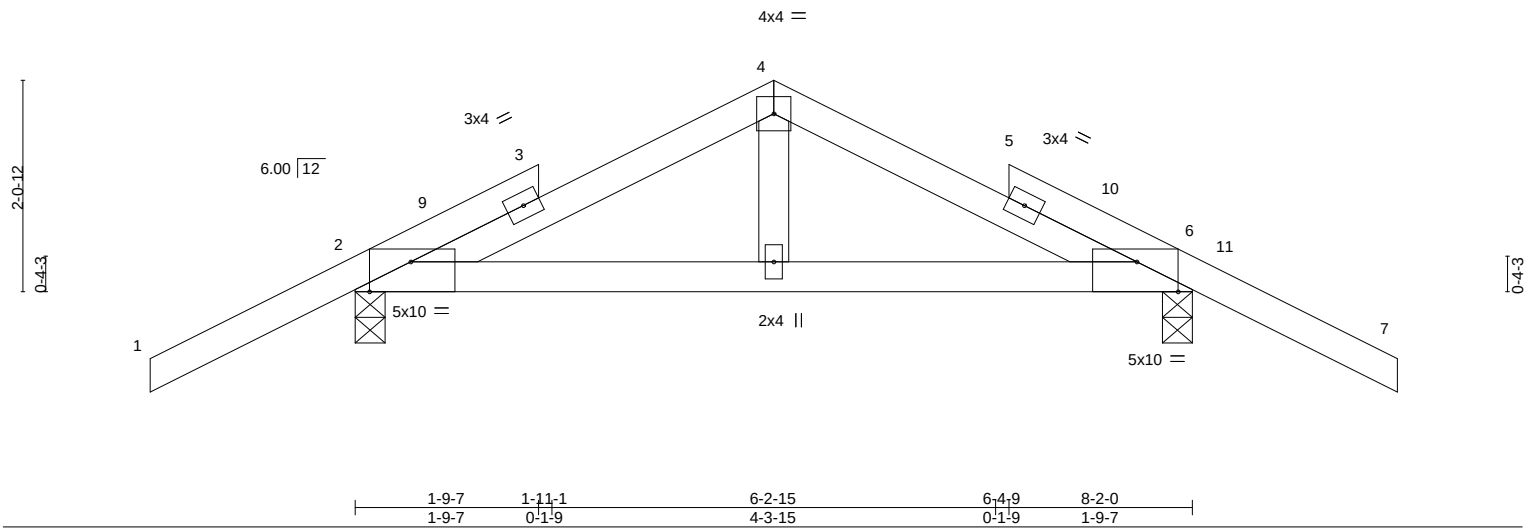

1-9-7	1-11-1	6-2-15	6-4-9	8-2-0
1-9-7	0-1-9	4-3-15	0-1-9	1-9-7

Plate Offsets (X,Y)-- [2:0-4-13,Edge], [6:0-4-13,Edge]

LOADING (psf)		**SPACING-** 2-0-0	**CSI.**		**DEFL.** in (loc) l/defl L/d	**PLATES**	**GRIP**
TCLL	20.0	Plate Grip DOL 1.25	TC	0.36	Vert(LL) -0.18 2-6 >527 360	MT20	244/190
TCDL	10.0	Lumber DOL 1.25	BC	0.40	Vert(CT) -0.36 2-6 >263 240		
BCLL	0.0 *	Rep Stress Incr YES	WB	0.00	Horz(CT) 0.00 6 n/a n/a		
BCDL	10.0	Code FBC2023/TPI2014	Matrix-P		Wind(LL) 0.00 2 **** 240	Weight: 39 lb	FT = 20%

LUMBER-
TOP CHORD 2x4 SP No.2
BOT CHORD 2x4 SP M 31 or 2x4 SP SS
OTHERS 2x4 SP No.2

BRACING-
TOP CHORD Structural wood sheathing directly applied or 6-0-0 oc purlins.
BOT CHORD Rigid ceiling directly applied or 10-0-0 oc bracing.

REACTIONS. (size) 2=0-3-8, 6=0-3-8
Max Horz 2=-45(LC 10)
Max Uplift 2=-74(LC 12), 6=-74(LC 12)
Max Grav 2=444(LC 1), 6=444(LC 1)

FORCES. (lb) - Max. Comp./Max. Ten. - All forces 250 (lb) or less except when shown.
TOP CHORD 2-4=-259/134, 4-6=-259/135

NOTES-
1) Unbalanced roof live loads have been considered for this design.
2) Wind: ASCE 7-22; Vult=130mph (3-second gust) Vasd=101mph; TCDL=4.2psf; BCDL=6.0psf; h=15ft; B=45ft; L=24ft; eave=4ft; Cat. II; Exp B; Encl., GCpi=0.18; MWFRS (directional) and C-C Zone3 -2-0-0 to 1-0-0, Zone1 1-0-0 to 4-1-0, Zone2 4-1-0 to 8-3-15, Zone1 8-3-15 to 10-2-0 zone; cantilever left and right exposed ;C-C for members and forces & MWFRS for reactions shown; Lumber DOL=1.60 plate grip DOL=1.60
3) Truss designed for wind loads in the plane of the truss only. For studs exposed to wind (normal to the face), see Standard Industry Gable End Details as applicable, or consult qualified building designer as per ANSI/TPI 1.
4) Building Designer / Project engineer responsible for verifying applied roof live load shown covers rain loading requirements specific to the use of this truss component.
5) Gable studs spaced at 2-0-0 oc.
6) This truss has been designed for a 10.0 psf bottom chord live load nonconcurrent with any other live loads.
7) * This truss has been designed for a live load of 20.0psf on the bottom chord in all areas where a rectangle 3-6-0 tall by 2-0-0 wide will fit between the bottom chord and any other members.
8) Provide mechanical connection (by others) of truss to bearing plate capable of withstanding 100 lb uplift at joint(s) 2, 6.

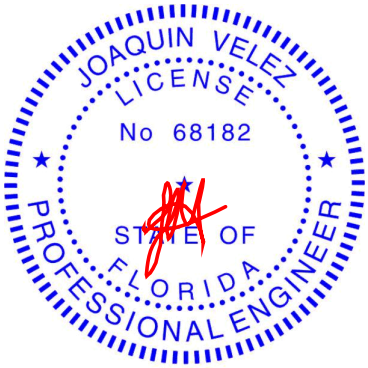

Joaquin Velez PE No.68182
MiTek Inc. DBA MiTek USA FL Cert 6634
16023 Swingley Ridge Rd. Chesterfield, MO 63017
Date:

July 25,2024

MiTek®
16023 Swingley Ridge Rd.
Chesterfield, MO 63017
314.434.1200 / MiTek-US.com

Job	Truss	Truss Type	Qty	Ply	2508-CR-2 Car
6243113	E7	Jack-Open	35	1	T34534231
					Job Reference (optional)

Tibbetts Lumber Co., LLC (Ocala, FL), Ocala, FL - 34472, 8.730 s Jul 11 2024 MiTek Industries, Inc. Wed Jul 24 11:27:04 2024 Page 1

ID:Ts3RJ0261_Xu2fYgSyBHAWzZSLZ-X5OAo5Dg1xP1_amcrEyCFoKU8We6GQ?a_Nd4hryuswb

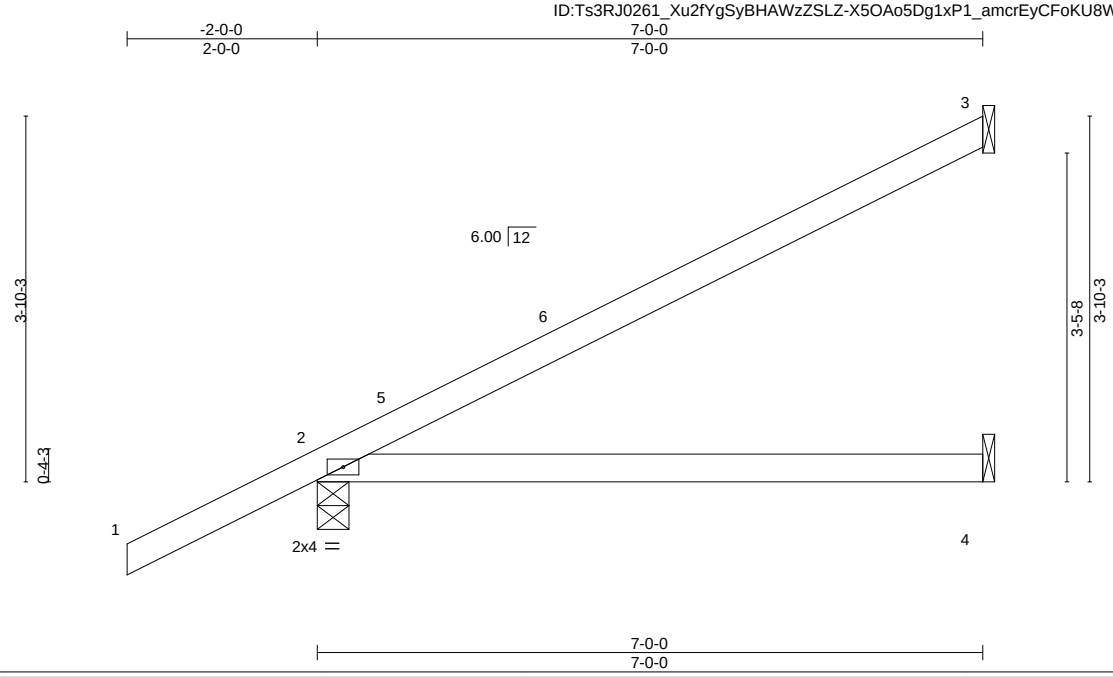

LOADING (psf)			SPACING- 2-0-0		CSI.		DEFL. in (loc) l/defl L/d					PLATES	GRIP
TCLL	20.0		Plate Grip DOL	1.25	TC	0.71	Vert(LL)	-0.13	2-4	>645	360	MT20	244/190
TCDL	10.0		Lumber DOL	1.25	BC	0.60	Vert(CT)	-0.25	2-4	>322	240		
BCLL	0.0	*	Rep Stress Incr	YES	WB	0.00	Horz(CT)	-0.00	3	n/a	n/a		
BCDL	10.0		Code FBC2023/TPI2014		Matrix-P		Wind(LL)	0.00	2	****	240	Weight: 26 lb	FT = 20%

LUMBER-
TOP CHORD 2x4 SP No.2
BOT CHORD 2x4 SP No.2

BRACING-
TOP CHORD Structural wood sheathing directly applied or 6-0-0 oc purlins.
BOT CHORD Rigid ceiling directly applied or 10-0-0 oc bracing.

REACTIONS. (size) 3=Mechanical, 2=0-4-0, 4=Mechanical
Max Horz 2=119(LC 12)
Max Uplift 3=-62(LC 12), 2=-63(LC 12)
Max Grav 3=182(LC 1), 2=422(LC 1), 4=135(LC 3)

FORCES. (lb) - Max. Comp./Max. Ten. - All forces 250 (lb) or less except when shown.

NOTES-
1) Wind: ASCE 7-22; Vult=130mph (3-second gust) Vasd=101mph; TCDL=4.2psf; BCDL=6.0psf; h=15ft; B=45ft; L=24ft; eave=4ft; Cat. II; Exp B; Encl., GCpi=0.18; MWFRS (directional) and C-C Zone3 -2-0-0 to 1-0-0, Zone1 1-0-0 to 6-11-4 zone; cantilever left and right exposed ;C-C for members and forces & MWFRS for reactions shown; Lumber DOL=1.60 plate grip DOL=1.60
2) Building Designer / Project engineer responsible for verifying applied roof live load shown covers rain loading requirements specific to the use of this truss component.
3) This truss has been designed for a 10.0 psf bottom chord live load nonconcurrent with any other live loads.
4) * This truss has been designed for a live load of 20.0psf on the bottom chord in all areas where a rectangle 3-6-0 tall by 2-0-0 wide will fit between the bottom chord and any other members.
5) Refer to girder(s) for truss to truss connections.
6) Provide mechanical connection (by others) of truss to bearing plate capable of withstanding 100 lb uplift at joint(s) 3, 2.

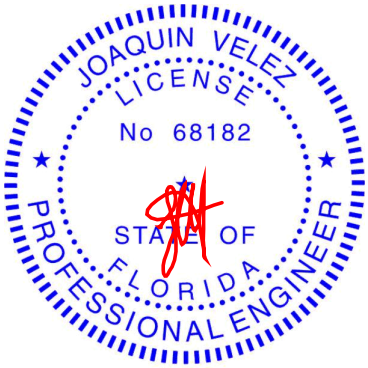

Joaquin Velez PE No.68182
MiTek Inc. DBA MiTek USA FL Cert 6634
16023 Swingley Ridge Rd. Chesterfield, MO 63017

Date:

July 25,2024

Job	Truss	Truss Type	Qty	Ply	2508-CR-2 Car
6243113	E7B	Jack-Open Supported Gable	1	1	T34534232 Job Reference (optional)

Tibbetts Lumber Co., LLC (Ocala, FL), Ocala, FL - 34472, 8.730 s Jul 11 2024 MiTek Industries, Inc. Wed Jul 24 11:27:05 2024 Page 1
ID:Ts3RJ0261_Xu2fYgSyBHAWzZSLZ-?HxZ0REIoEXucjLpPyTRo?tefw_X?tFkC1NdEHyuswa

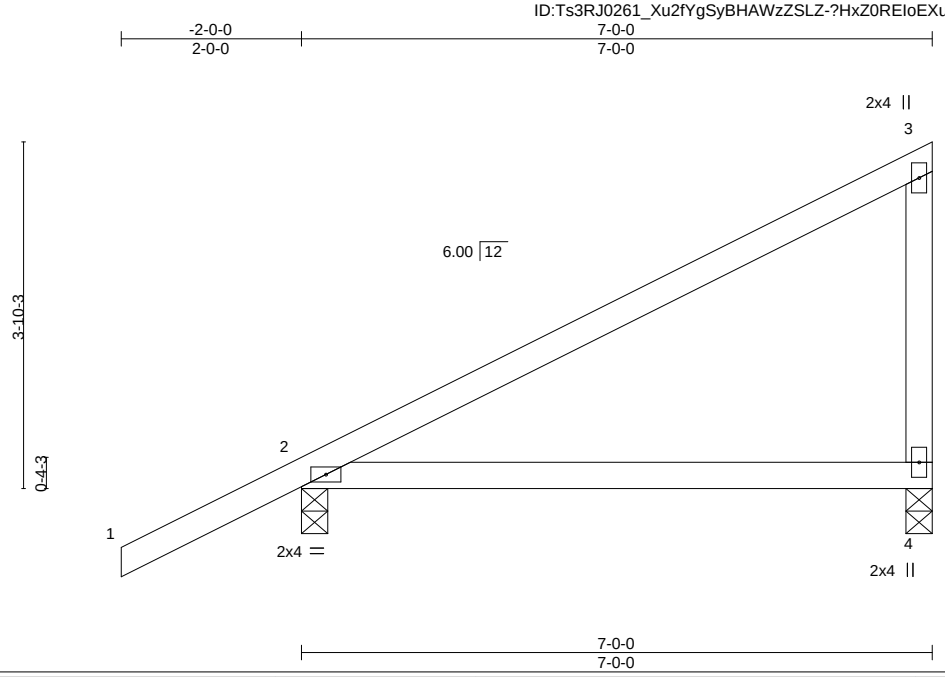

LOADING (psf)			SPACING- 2-0-0		CSI.		DEFL. in (loc) l/defl L/d					PLATES	GRIP
TCLL	20.0		Plate Grip DOL	1.25	TC	0.79	Vert(LL)	-0.12	2-4	>663	360	MT20	244/190
TCDL	10.0		Lumber DOL	1.25	BC	0.59	Vert(CT)	-0.24	2-4	>331	240		
BCLL	0.0	*	Rep Stress Incr	YES	WB	0.00	Horz(CT)	0.00		n/a	n/a		
BCDL	10.0		Code FBC2023/TPI2014		Matrix-P		Wind(LL)	0.00	2	****	240	Weight: 30 lb	FT = 20%

LUMBER-
TOP CHORD 2x4 SP No.2
BOT CHORD 2x4 SP No.2
WEBS 2x4 SP No.2

BRACING-
TOP CHORD Structural wood sheathing directly applied or 6-0-0 oc purlins, except end verticals.
BOT CHORD Rigid ceiling directly applied or 10-0-0 oc bracing.

REACTIONS. (size) 4=0-3-8, 2=0-3-8
Max Horz 2=118(LC 12)
Max Uplift 4=-21(LC 12), 2=-63(LC 12)
Max Grav 4=248(LC 1), 2=418(LC 1)

FORCES. (lb) - Max. Comp./Max. Ten. - All forces 250 (lb) or less except when shown.
TOP CHORD 3-4=-181/252

NOTES-
1) Wind: ASCE 7-22; Vult=130mph (3-second gust) Vasd=101mph; TCDL=4.2psf; BCDL=6.0psf; h=15ft; B=45ft; L=24ft; eave=2ft; Cat. II; Exp B; Encl., GCpi=0.18; MWFRS (directional) and C-C Zone3 zone; cantilever left and right exposed ;C-C for members and forces & MWFRS for reactions shown; Lumber DOL=1.60 plate grip DOL=1.60
2) Building Designer / Project engineer responsible for verifying applied roof live load shown covers rain loading requirements specific to the use of this truss component.
3) This truss has been designed for a 10.0 psf bottom chord live load nonconcurrent with any other live loads.
4) * This truss has been designed for a live load of 20.0psf on the bottom chord in all areas where a rectangle 3-6-0 tall by 2-0-0 wide will fit between the bottom chord and any other members.
5) Provide mechanical connection (by others) of truss to bearing plate capable of withstanding 100 lb uplift at joint(s) 4, 2.

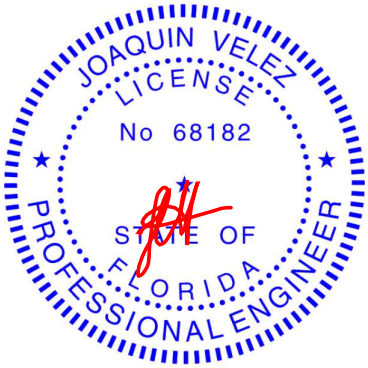

Joaquin Velez PE No.68182
MiTek Inc. DBA MiTek USA FL Cert 6634
16023 Swingley Ridge Rd. Chesterfield, MO 63017
Date:
July 25,2024

Job	Truss	Truss Type	Qty	Ply	2508-CR-2 Car
6243113	E7V	Jack-Open	3	1	T34534233 Job Reference (optional)

Tibbetts Lumber Co., LLC (Ocala, FL), Ocala, FL - 34472, 8.730 s Jul 11 2024 MiTek Industries, Inc. Wed Jul 24 11:27:05 2024 Page 1
ID:Ts3RJ0261_Xu2fYgSyBHAWzZSLZ-?HxZ0REIoEXucjLpPyTRo?tfuw_I?tFkC1NdEHyuswa

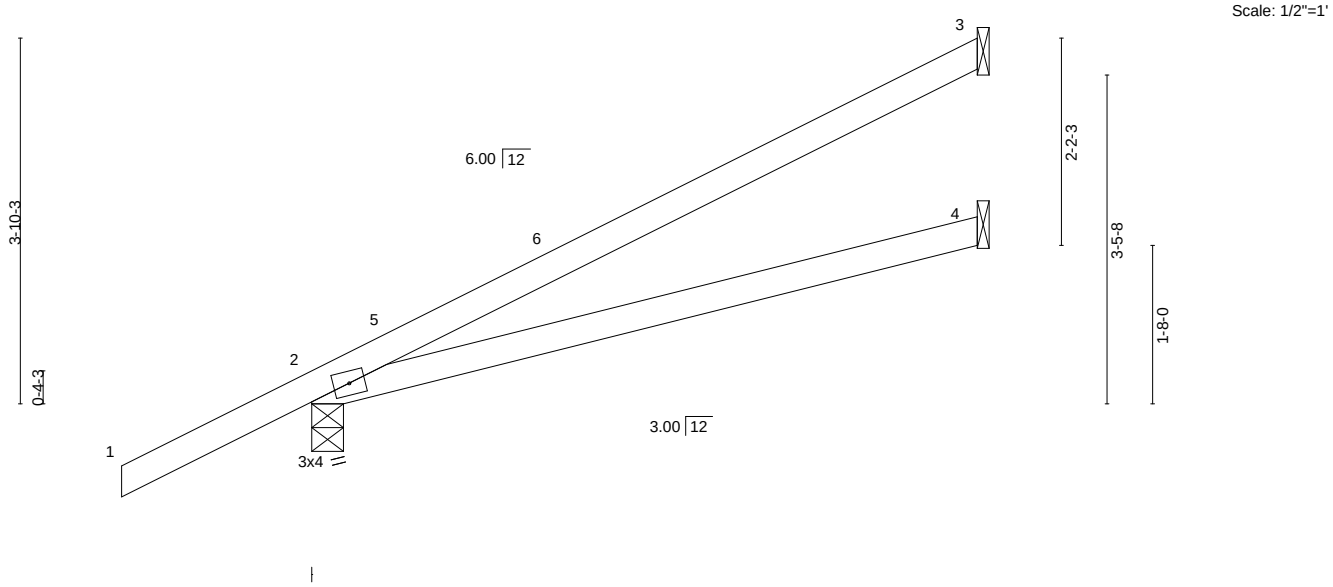

LOADING (psf)			SPACING- 2-0-0		CSI.		DEFL. in (loc) l/defl L/d					PLATES	GRIP
TCLL	20.0		Plate Grip DOL	1.25	TC	0.71	Vert(LL)	-0.13	2-4	>625	360	MT20	244/190
TCDL	10.0		Lumber DOL	1.25	BC	0.60	Vert(CT)	-0.26	2-4	>313	240		
BCLL	0.0	*	Rep Stress Incr	YES	WB	0.00	Horz(CT)	-0.00	3	n/a	n/a		
BCDL	10.0		Code FBC2023/TPI2014		Matrix-P		Wind(LL)	0.00	2	****	240	Weight: 26 lb	FT = 20%

LUMBER-
TOP CHORD 2x4 SP No.2
BOT CHORD 2x4 SP No.2

BRACING-
TOP CHORD Structural wood sheathing directly applied or 6-0-0 oc purlins.
BOT CHORD Rigid ceiling directly applied or 10-0-0 oc bracing.

REACTIONS. (size) 3=Mechanical, 2=0-4-0, 4=Mechanical
Max Horz 2=118(LC 12)
Max Uplift 3=-63(LC 12), 2=-63(LC 12)
Max Grav 3=182(LC 1), 2=422(LC 1), 4=135(LC 3)

FORCES. (lb) - Max. Comp./Max. Ten. - All forces 250 (lb) or less except when shown.

NOTES-
1) Wind: ASCE 7-22; Vult=130mph (3-second gust) Vasd=101mph; TCDL=4.2psf; BCDL=6.0psf; h=15ft; B=45ft; L=24ft; eave=4ft; Cat. II; Exp B; Encl., GCpi=0.18; MWFRS (directional) and C-C Zone3 -2-0-0 to 1-0-0, Zone1 1-0-0 to 6-11-4 zone; cantilever left and right exposed ;C-C for members and forces & MWFRS for reactions shown; Lumber DOL=1.60 plate grip DOL=1.60
2) Building Designer / Project engineer responsible for verifying applied roof live load shown covers rain loading requirements specific to the use of this truss component.
3) This truss has been designed for a 10.0 psf bottom chord live load nonconcurrent with any other live loads.
4) * This truss has been designed for a live load of 20.0psf on the bottom chord in all areas where a rectangle 3-6-0 tall by 2-0-0 wide will fit between the bottom chord and any other members.
5) Refer to girder(s) for truss to truss connections.
6) Bearing at joint(s) 2 considers parallel to grain value using ANSI/TPI 1 angle to grain formula. Building designer should verify capacity of bearing surface.
7) Provide mechanical connection (by others) of truss to bearing plate capable of withstanding 100 lb uplift at joint(s) 3, 2.

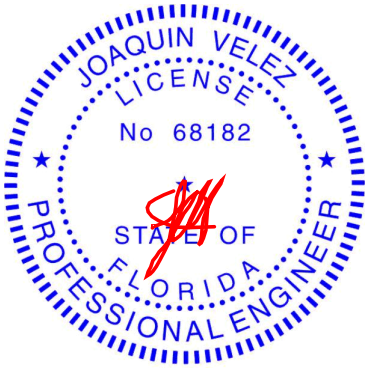

Joaquin Velez PE No.68182
MiTek Inc. DBA MiTek USA FL Cert 6634
16023 Swingley Ridge Rd. Chesterfield, MO 63017

Date:
July 25,2024

MiTek®
16023 Swingley Ridge Rd.
Chesterfield, MO 63017
314.434.1200 / MiTek-US.com

Job	Truss	Truss Type	Qty	Ply	2508-CR-2 Car
6243113	E7VA	Jack-Open	1	1	T34534234
					Job Reference (optional)

Tibbetts Lumber Co., LLC (Ocala, FL), Ocala, FL - 34472, 8.730 s Jul 11 2024 MiTek Industries, Inc. Wed Jul 24 11:27:06 2024 Page 1
ID:Ts3RJ0261_Xu2fYgSyBHAWzZSLZ-TUVxDnEwZYflDtw?zf_gKDPqpKMrkK0tRh6BmjyuswZ

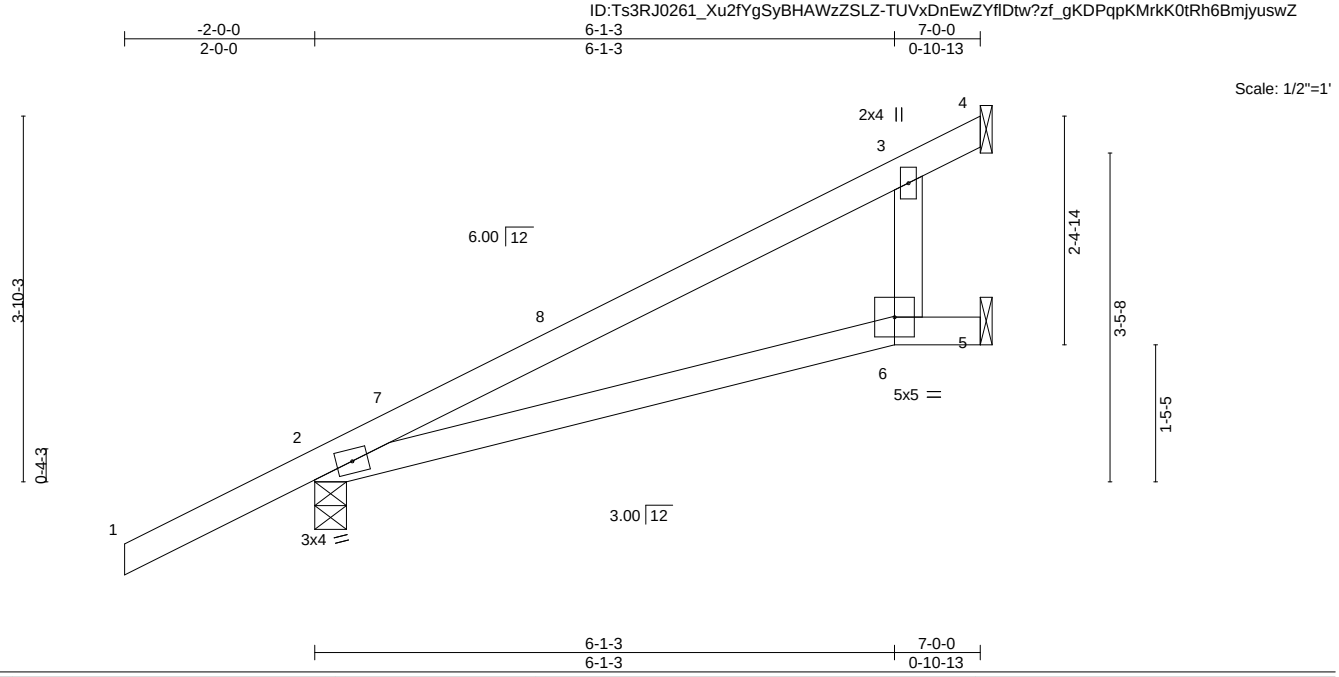

LOADING (psf)			SPACING- 2-0-0		CSI.		DEFL.	in	(loc)	l/defl	L/d	PLATES	GRIP
TCLL	20.0		Plate Grip DOL	1.25	TC	0.76	Vert(LL)	-0.08	2-6	>966	360	MT20	244/190
TCDL	10.0		Lumber DOL	1.25	BC	0.46	Vert(CT)	-0.19	2-6	>434	240		
BCLL	0.0	*	Rep Stress Incr	YES	WB	0.03	Horz(CT)	0.03	5	n/a	n/a		
BCDL	10.0		Code FBC2023/TPI2014		Matrix-P		Wind(LL)	0.08	6	>999	240	Weight: 28 lb	FT = 20%

LUMBER-
TOP CHORD 2x4 SP No.2
BOT CHORD 2x4 SP No.2
WEBS 2x4 SP No.2

BRACING-
TOP CHORD Structural wood sheathing directly applied or 6-0-0 oc purlins.
BOT CHORD Rigid ceiling directly applied or 10-0-0 oc bracing.

REACTIONS. (size) 4=Mechanical, 2=0-4-0, 5=Mechanical
Max Horz 2=118(LC 12)
Max Uplift 4=-27(LC 12), 2=-63(LC 12)
Max Grav 4=242(LC 1), 2=422(LC 1), 5=17(LC 3)

FORCES. (lb) - Max. Comp./Max. Ten. - All forces 250 (lb) or less except when shown.

NOTES-
1) Wind: ASCE 7-22; Vult=130mph (3-second gust) Vasd=101mph; TCDL=4.2psf; BCDL=6.0psf; h=15ft; B=45ft; L=24ft; eave=4ft; Cat. II; Exp B; Encl., GCpi=0.18; MWFRS (directional) and C-C Zone3 -2-0-0 to 1-0-0, Zone1 1-0-0 to 6-11-4 zone; cantilever left and right exposed ;C-C for members and forces & MWFRS for reactions shown; Lumber DOL=1.60 plate grip DOL=1.60
2) Building Designer / Project engineer responsible for verifying applied roof live load shown covers rain loading requirements specific to the use of this truss component.
3) This truss has been designed for a 10.0 psf bottom chord live load nonconcurrent with any other live loads.
4) * This truss has been designed for a live load of 20.0psf on the bottom chord in all areas where a rectangle 3-6-0 tall by 2-0-0 wide will fit between the bottom chord and any other members.
5) Refer to girder(s) for truss to truss connections.
6) Bearing at joint(s) 2 considers parallel to grain value using ANSI/TPI 1 angle to grain formula. Building designer should verify capacity of bearing surface.
7) Provide mechanical connection (by others) of truss to bearing plate capable of withstanding 100 lb uplift at joint(s) 4, 2.

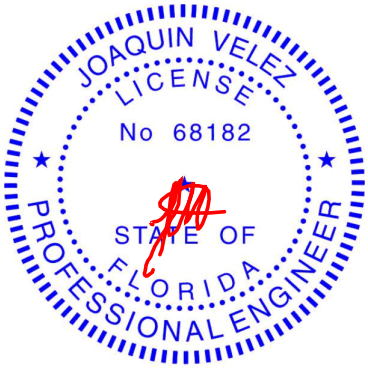

Joaquin Velez PE No.68182
MiTek Inc. DBA MiTek USA FL Cert 6634
16023 Swingley Ridge Rd. Chesterfield, MO 63017
Date:

July 25,2024

MiTek®
16023 Swingley Ridge Rd.
Chesterfield, MO 63017
314.434.1200 / MiTek-US.com

Job	Truss	Truss Type	Qty	Ply	2508-CR-2 Car
6243113	E7VB	Jack-Open	1	1	T34534235 Job Reference (optional)

Tibbetts Lumber Co., LLC (Ocala, FL), Ocala, FL - 34472, 8.730 s Jul 11 2024 MiTek Industries, Inc. Wed Jul 24 11:27:06 2024 Page 1
ID:Ts3RJ0261_Xu2fYgSyBHAWzZSLZ-TUVxDnEwZYflDtw?zf_gKDPxwKQ5kKYtRh6BmjyuswZ

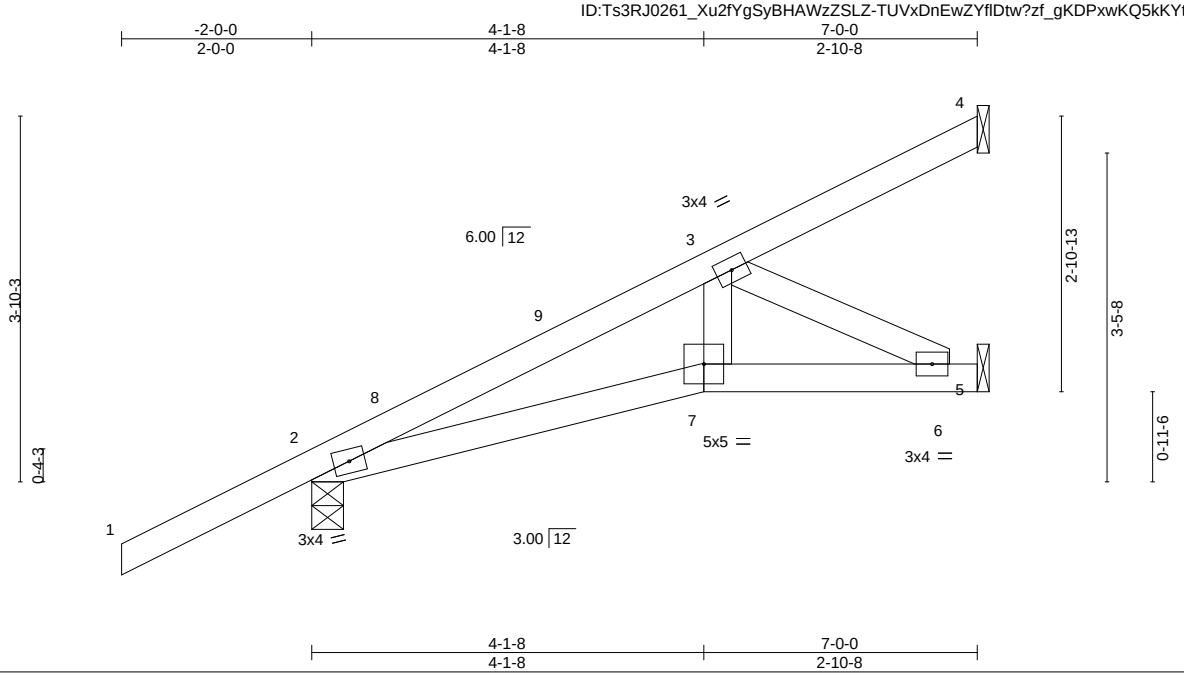

LOADING (psf)			SPACING- 2-0-0		CSI.		DEFL. in (loc) l/defl L/d					PLATES	GRIP
TCLL	20.0		Plate Grip DOL	1.25	TC	0.31	Vert(LL)	-0.02	2-7	>999	360	MT20	244/190
TCDL	10.0		Lumber DOL	1.25	BC	0.25	Vert(CT)	-0.04	2-7	>999	240		
BCLL	0.0	*	Rep Stress Incr	YES	WB	0.06	Horz(CT)	0.01	5	n/a	n/a		
BCDL	10.0		Code FBC2023/TPI2014		Matrix-P		Wind(LL)	0.01	7	>999	240	Weight: 31 lb	FT = 20%

LUMBER-
TOP CHORD 2x4 SP No.2
BOT CHORD 2x4 SP No.2
WEBS 2x4 SP No.2

BRACING-
TOP CHORD Structural wood sheathing directly applied or 6-0-0 oc purlins.
BOT CHORD Rigid ceiling directly applied or 10-0-0 oc bracing.

REACTIONS. (size) 4=Mechanical, 2=0-4-0, 5=Mechanical
Max Horz 2=118(LC 12)
Max Uplift 4=-24(LC 12), 2=-63(LC 12)
Max Grav 4=65(LC 1), 2=422(LC 1), 5=185(LC 1)

FORCES. (lb) - Max. Comp./Max. Ten. - All forces 250 (lb) or less except when shown.
TOP CHORD 2-3=-480/106
BOT CHORD 2-7=-210/380, 6-7=-198/341
WEBS 3-6=-381/221

NOTES-
1) Wind: ASCE 7-22; Vult=130mph (3-second gust) Vasd=101mph; TCDL=4.2psf; BCDL=6.0psf; h=15ft; B=45ft; L=24ft; eave=4ft; Cat. II; Exp B; Encl., GCpi=0.18; MWFRS (directional) and C-C Zone3 -2-0-0 to 1-0-0, Zone1 1-0-0 to 6-11-4 zone; cantilever left and right exposed ;C-C for members and forces & MWFRS for reactions shown; Lumber DOL=1.60 plate grip DOL=1.60
2) Building Designer / Project engineer responsible for verifying applied roof live load shown covers rain loading requirements specific to the use of this truss component.
3) This truss has been designed for a 10.0 psf bottom chord live load nonconcurrent with any other live loads.
4) * This truss has been designed for a live load of 20.0psf on the bottom chord in all areas where a rectangle 3-6-0 tall by 2-0-0 wide will fit between the bottom chord and any other members.
5) Refer to girder(s) for truss to truss connections.
6) Bearing at joint(s) 2 considers parallel to grain value using ANSI/TPI 1 angle to grain formula. Building designer should verify capacity of bearing surface.
7) Provide mechanical connection (by others) of truss to bearing plate capable of withstanding 100 lb uplift at joint(s) 4, 2.

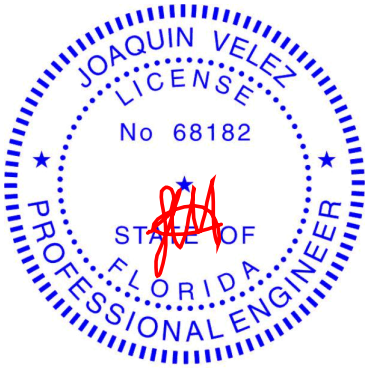

Joaquin Velez PE No.68182
MiTek Inc. DBA MiTek USA FL Cert 6634
16023 Swingley Ridge Rd. Chesterfield, MO 63017

Date:
July 25,2024

MiTek®
16023 Swingley Ridge Rd.
Chesterfield, MO 63017
314.434.1200 / MiTek-US.com

Job	Truss	Truss Type	Qty	Ply	2508-CR-2 Car
6243113	E7VC	Jack-Open	1	1	T34534236 Job Reference (optional)

Tibbetts Lumber Co., LLC (Ocala, FL), Ocala, FL - 34472, 8.730 s Jul 11 2024 MiTek Industries, Inc. Wed Jul 24 11:27:06 2024 Page 1
ID:Ts3RJ0261_Xu2fYgSyBHAWzZSLZ-TUVxDnEwZYflDtw?zf_gKDPpzKPUkK?tRh6BmjyuswZ

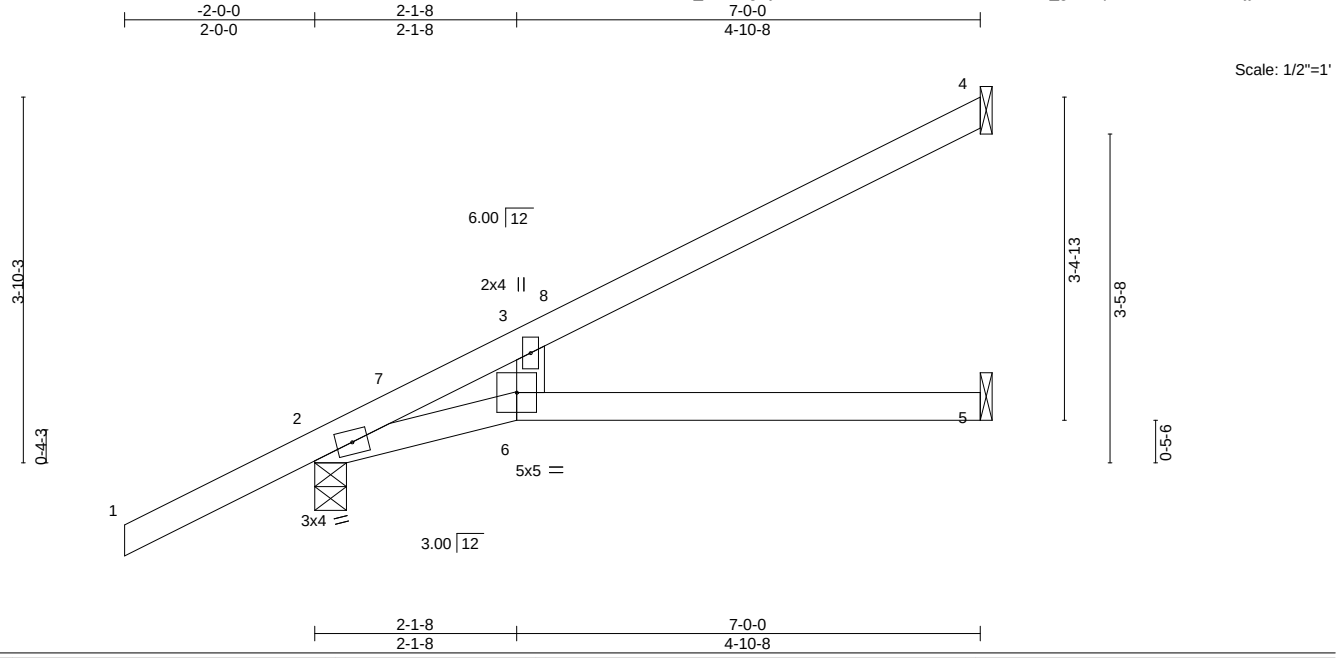

LOADING (psf)			SPACING- 2-0-0		CSI.		DEFL. in (loc) l/defl L/d					PLATES	GRIP
TCLL	20.0		Plate Grip DOL	1.25	TC	0.82	Vert(LL)	-0.16	6	>517	360	MT20	244/190
TCDL	10.0		Lumber DOL	1.25	BC	0.29	Vert(CT)	-0.31	6	>264	240		
BCLL	0.0	*	Rep Stress Incr	YES	WB	0.03	Horz(CT)	0.08	5	n/a	n/a		
BCDL	10.0		Code FBC2023/TPI2014		Matrix-P		Wind(LL)	0.19	6	>437	240	Weight: 26 lb	FT = 20%

LUMBER-
TOP CHORD 2x4 SP No.2
BOT CHORD 2x4 SP No.2
WEBS 2x4 SP No.2

BRACING-
TOP CHORD Structural wood sheathing directly applied or 6-0-0 oc purlins.
BOT CHORD Rigid ceiling directly applied or 10-0-0 oc bracing.

REACTIONS. (size) 4=Mechanical, 2=0-4-0, 5=Mechanical
Max Horz 2=118(LC 12)
Max Uplift 4=-51(LC 12), 2=-63(LC 12)
Max Grav 4=202(LC 1), 2=422(LC 1), 5=96(LC 3)

FORCES. (lb) - Max. Comp./Max. Ten. - All forces 250 (lb) or less except when shown.

NOTES-
1) Wind: ASCE 7-22; Vult=130mph (3-second gust) Vasd=101mph; TCDL=4.2psf; BCDL=6.0psf; h=15ft; B=45ft; L=24ft; eave=4ft; Cat. II; Exp B; Encl., GCpi=0.18; MWFRS (directional) and C-C Zone3 -2-0-0 to 1-0-0, Zone1 1-0-0 to 6-11-4 zone; cantilever left and right exposed ;C-C for members and forces & MWFRS for reactions shown; Lumber DOL=1.60 plate grip DOL=1.60
2) Building Designer / Project engineer responsible for verifying applied roof live load shown covers rain loading requirements specific to the use of this truss component.
3) This truss has been designed for a 10.0 psf bottom chord live load nonconcurrent with any other live loads.
4) * This truss has been designed for a live load of 20.0psf on the bottom chord in all areas where a rectangle 3-6-0 tall by 2-0-0 wide will fit between the bottom chord and any other members.
5) Refer to girder(s) for truss to truss connections.
6) Bearing at joint(s) 2 considers parallel to grain value using ANSI/TPI 1 angle to grain formula. Building designer should verify capacity of bearing surface.
7) Provide mechanical connection (by others) of truss to bearing plate capable of withstanding 100 lb uplift at joint(s) 4, 2.

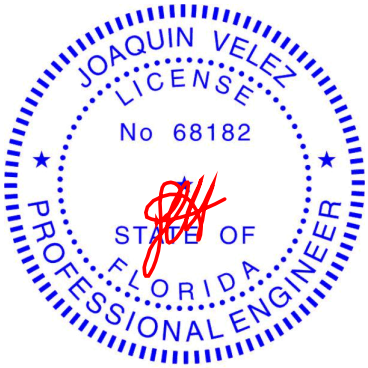

Joaquin Velez PE No.68182
MiTek Inc. DBA MiTek USA FL Cert 6634
16023 Swingley Ridge Rd. Chesterfield, MO 63017
Date:

July 25,2024

MiTek®
16023 Swingley Ridge Rd.
Chesterfield, MO 63017
314.434.1200 / MiTek-US.com

Job	Truss	Truss Type	Qty	Ply	2508-CR-2 Car
6243113	H7	Diagonal Hip Girder	2	1	T34534237 Job Reference (optional)

Tibbetts Lumber Co., LLC (Ocala, FL), Ocala, FL - 34472, 8.730 s Jul 11 2024 MiTek Industries, Inc. Wed Jul 24 11:27:07 2024 Page 1
ID:Ts3RJ0261_Xu2fYgSyBHAWzZSLZ-yg3JQ7FYKsncr1VBXNVvtQyzYkftThS1gLskl9yuswY

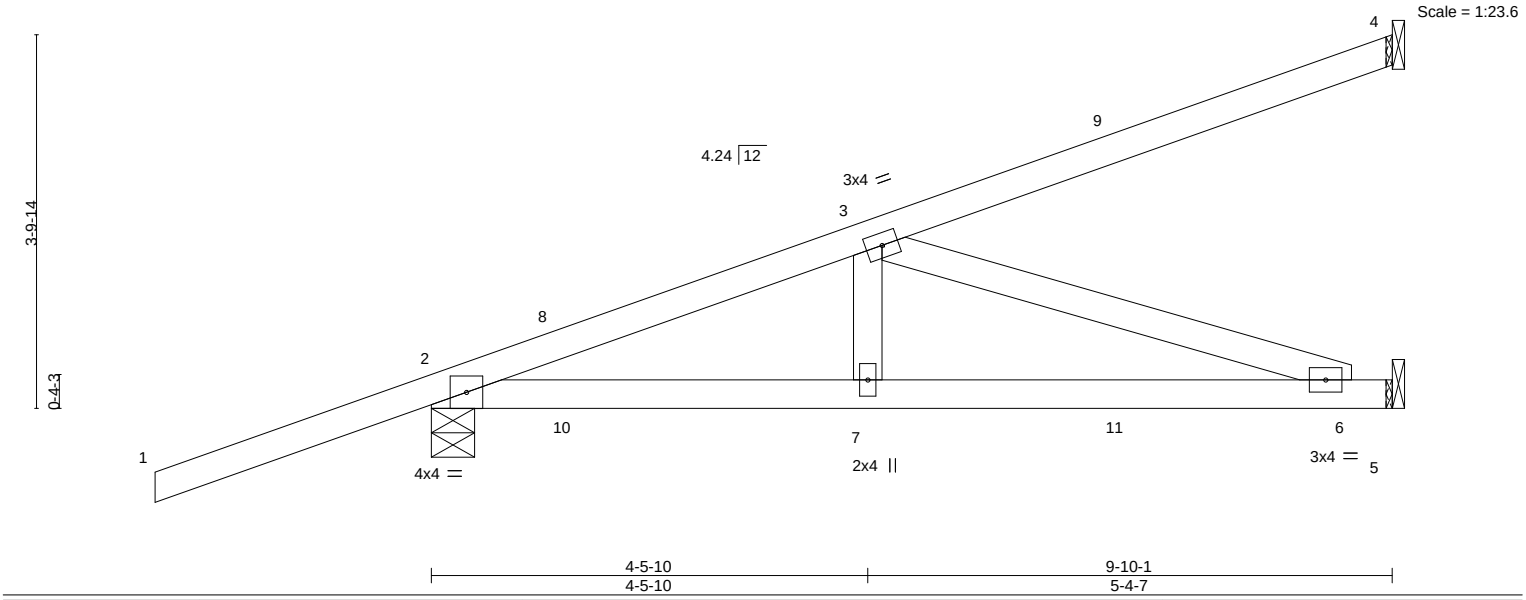

LOADING (psf)			SPACING- 2-0-0		CSI.		DEFL.	in	(loc)	l/defl	L/d	PLATES	GRIP
TCLL	20.0		Plate Grip DOL	1.25	TC	0.83	Vert(LL)	-0.06	6-7	>999	360	MT20	244/190
TCDL	10.0		Lumber DOL	1.25	BC	0.66	Vert(CT)	-0.14	6-7	>843	240		
BCLL	0.0	*	Rep Stress Incr	NO	WB	0.34	Horz(CT)	0.01	5	n/a	n/a		
BCDL	10.0		Code FBC2023/TPI2014		Matrix-S		Wind(LL)	-0.03	2-7	>999	240	Weight: 44 lb	FT = 20%

LUMBER-
TOP CHORD 2x4 SP No.2
BOT CHORD 2x4 SP No.2
WEBS 2x4 SP No.2

BRACING-
TOP CHORD Structural wood sheathing directly applied or 5-3-4 oc purlins.
BOT CHORD Rigid ceiling directly applied or 10-0-0 oc bracing.

REACTIONS. (size) 4=Mechanical, 2=0-5-5, 5=Mechanical
Max Horz 2=119(LC 27)
Max Uplift 4=-50(LC 8), 2=-171(LC 8)
Max Grav 4=164(LC 1), 2=583(LC 31), 5=271(LC 3)

FORCES. (lb) - Max. Comp./Max. Ten. - All forces 250 (lb) or less except when shown.
TOP CHORD 2-3=-785/22
BOT CHORD 2-7=-54/667, 6-7=-54/667
WEBS 3-7=0/287, 3-6=-702/57

NOTES-
1) Wind: ASCE 7-22; Vult=130mph (3-second gust) Vasd=101mph; TCDL=4.2psf; BCDL=6.0psf; h=15ft; B=45ft; L=24ft; eave=4ft; Cat. II; Exp B; Encl., GCpi=0.18; MWFRS (directional); cantilever left and right exposed ; Lumber DOL=1.60 plate grip DOL=1.60
2) Building Designer / Project engineer responsible for verifying applied roof live load shown covers rain loading requirements specific to the use of this truss component.
3) This truss has been designed for a 10.0 psf bottom chord live load nonconcurrent with any other live loads.
4) * This truss has been designed for a live load of 20.0psf on the bottom chord in all areas where a rectangle 3-6-0 tall by 2-0-0 wide will fit between the bottom chord and any other members.
5) Refer to girder(s) for truss to truss connections.
6) Provide mechanical connection (by others) of truss to bearing plate capable of withstanding 100 lb uplift at joint(s) 4 except (jt=lb) 2=171.
7) Hanger(s) or other connection device(s) shall be provided sufficient to support concentrated load(s) 88 lb down and 186 lb up at 1-4-15, 88 lb down and 186 lb up at 1-4-15, 54 lb down and 23 lb up at 4-2-15, 54 lb down and 23 lb up at 4-2-15, and 82 lb down and 56 lb up at 7-0-14, and 82 lb down and 56 lb up at 7-0-14 on top chord, and at 1-4-15, at 1-4-15, 11 lb down at 4-2-15, 11 lb down at 4-2-15, and 39 lb down at 7-0-14, and 39 lb down at 7-0-14 on bottom chord. The design/selection of such connection device(s) is the responsibility of others.
8) In the LOAD CASE(S) section, loads applied to the face of the truss are noted as front (F) or back (B).

LOAD CASE(S) Standard
1) Dead + Roof Live (balanced): Lumber Increase=1.25, Plate Increase=1.25
Uniform Loads (plf)
Vert: 1-4=-60, 2-5=-20
Concentrated Loads (lb)
Vert: 8=124(F=62, B=62) 9=-58(F=-29, B=-29) 11=-39(F=-19, B=-19)

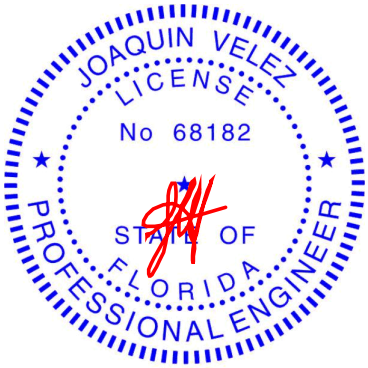

Joaquin Velez PE No.68182
MiTek Inc. DBA MiTek USA FL Cert 6634
16023 Swingley Ridge Rd. Chesterfield, MO 63017
Date:

July 25,2024

MiTek®
16023 Swingley Ridge Rd.
Chesterfield, MO 63017
314.434.1200 / MiTek-US.com

Job	Truss	Truss Type	Qty	Ply	2508-CR-2 Car
6243113	PB1	Piggyback	1	1	T34534238 Job Reference (optional)

Tibbetts Lumber Co., LLC (Ocala, FL), Ocala, FL - 34472, 8.730 s Jul 11 2024 MiTek Industries, Inc. Wed Jul 24 11:27:07 2024 Page 1
ID:Ts3RJ0261_Xu2fYgSyBHAWzZSLZ-yg3JQ7FYKsncr1VBXNVvtQy8fkn?TmP1gLskI9yuswY

2-0-0 | 7-5-0 | 9-5-0
2-0-0 | 5-5-0 | 2-0-0

Scale = 1:18.1

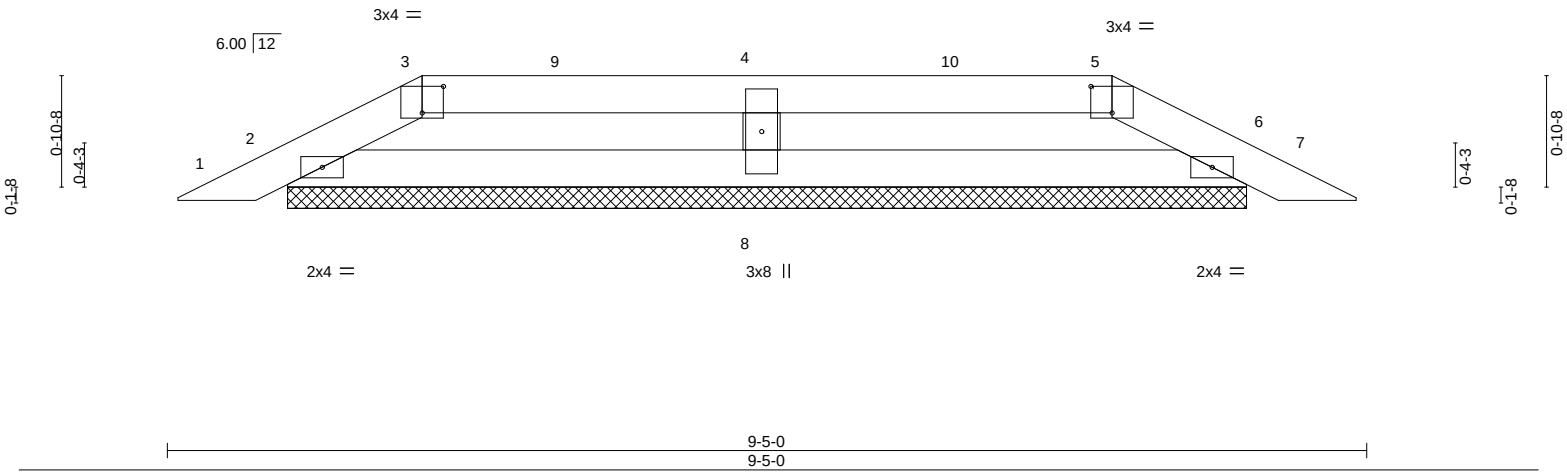

Plate Offsets (X,Y)-- [3:0-2-0,0-2-8], [5:0-2-0,0-2-8]

LOADING (psf)		SPACING- 2-0-0		CSI.		DEFL. in (loc) l/defl L/d		PLATES	GRIP
TCLL	20.0	Plate Grip DOL	1.25	TC	0.12	Vert(LL) 0.00 7 n/r 120		MT20	244/190
TCDL	10.0	Lumber DOL	1.25	BC	0.14	Vert(CT) 0.00 7 n/r 120			
BCLL	0.0 *	Rep Stress Incr	YES	WB	0.02	Horz(CT) 0.00 6 n/a n/a			
BCDL	10.0	Code FBC2023/TPI2014		Matrix-S				Weight: 26 lb	FT = 20%

LUMBER-
TOP CHORD 2x4 SP No.2
BOT CHORD 2x4 SP No.2
WEBS 2x4 SP No.2

BRACING-
TOP CHORD Structural wood sheathing directly applied or 6-0-0 oc purlins.
BOT CHORD Rigid ceiling directly applied or 10-0-0 oc bracing.

REACTIONS. (size) 2=7-6-6, 6=7-6-6, 8=7-6-6
Max Horz 2=-14(LC 10)
Max Uplift 2=-29(LC 12), 6=-29(LC 12), 8=-8(LC 9)
Max Grav 2=184(LC 1), 6=188(LC 1), 8=297(LC 1)

FORCES. (lb) - Max. Comp./Max. Ten. - All forces 250 (lb) or less except when shown.

NOTES-
1) Unbalanced roof live loads have been considered for this design.
2) Wind: ASCE 7-22; Vult=130mph (3-second gust) Vasd=101mph; TCDL=4.2psf; BCDL=6.0psf; h=15ft; B=45ft; L=24ft; eave=4ft; Cat. II; Exp B; Encl., GCpi=0.18; MWFRS (directional) and C-C Zone3 0-4-11 to 2-0-0, Zone2 2-0-0 to 6-2-15, Zone1 6-2-15 to 7-5-0, Zone3 7-5-0 to 9-0-5 zone; cantilever left and right exposed ;C-C for members and forces & MWFRS for reactions shown; Lumber DOL=1.60 plate grip DOL=1.60
3) Building Designer / Project engineer responsible for verifying applied roof live load shown covers rain loading requirements specific to the use of this truss component.
4) Provide adequate drainage to prevent water ponding.
5) Gable requires continuous bottom chord bearing.
6) This truss has been designed for a 10.0 psf bottom chord live load nonconcurrent with any other live loads.
7) * This truss has been designed for a live load of 20.0psf on the bottom chord in all areas where a rectangle 3-6-0 tall by 2-0-0 wide will fit between the bottom chord and any other members.
8) Provide mechanical connection (by others) of truss to bearing plate capable of withstanding 100 lb uplift at joint(s) 2, 6, 8.
9) See Standard Industry Piggyback Truss Connection Detail for Connection to base truss as applicable, or consult qualified building designer.

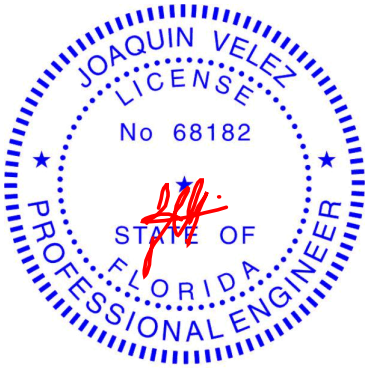

Joaquin Velez PE No.68182
MiTek Inc. DBA MiTek USA FL Cert 6634
16023 Swingley Ridge Rd. Chesterfield, MO 63017
Date:

July 25,2024

MiTek®
16023 Swingley Ridge Rd.
Chesterfield, MO 63017
314.434.1200 / MiTek-US.com

Job	Truss	Truss Type	Qty	Ply	2508-CR-2 Car
6243113	PB2	Piggyback	1	1	T34534239 Job Reference (optional)

Tibbetts Lumber Co., LLC (Ocala, FL), Ocala, FL - 34472, 8.730 s Jul 11 2024 MiTek Industries, Inc. Wed Jul 24 11:27:08 2024 Page 1
ID:Ts3RJ0261_Xu2fYgSyBHAWzZSLZ-QsdheSGA49vTTB4N4408QeVJz76DCDkAv?bHqcyuswX

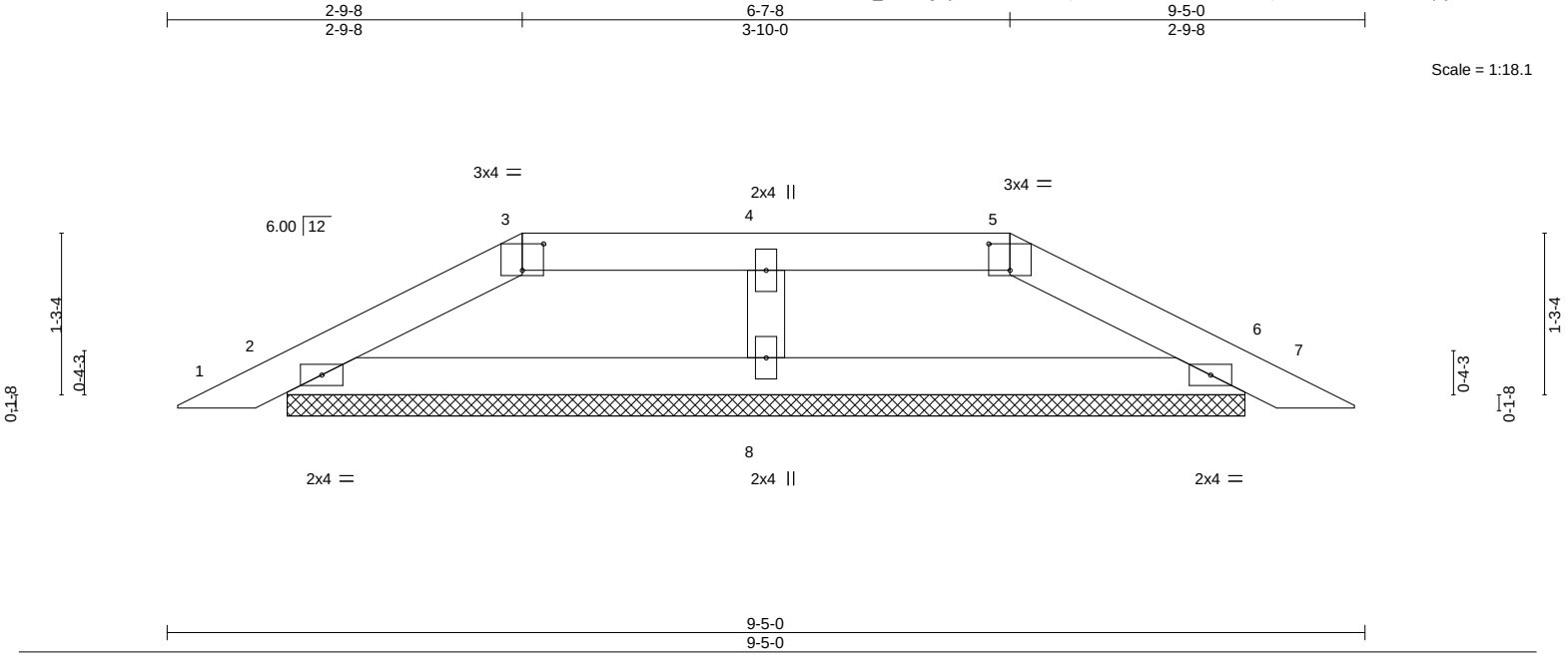

Plate Offsets (X,Y)-- [3:0-2-0,0-2-8], [5:0-2-0,0-2-8]

LOADING (psf)		SPACING- 2-0-0		CSI.		DEFL. in (loc) l/defl L/d					PLATES	GRIP
TCLL	20.0	Plate Grip DOL	1.25	TC	0.08	Vert(LL)	0.00	7	n/r	120	MT20	244/190
TCDL	10.0	Lumber DOL	1.25	BC	0.14	Vert(CT)	0.00	7	n/r	120		
BCLL	0.0 *	Rep Stress Incr	YES	WB	0.02	Horz(CT)	0.00	6	n/a	n/a		
BCDL	10.0	Code FBC2023/TPI2014		Matrix-S							Weight: 27 lb	FT = 20%

LUMBER-
TOP CHORD 2x4 SP No.2
BOT CHORD 2x4 SP No.2
OTHERS 2x4 SP No.2

BRACING-
TOP CHORD Structural wood sheathing directly applied or 6-0-0 oc purlins.
BOT CHORD Rigid ceiling directly applied or 10-0-0 oc bracing.

REACTIONS. (size) 2=7-6-6, 6=7-6-6, 8=7-6-6
Max Horz 2=-20(LC 10)
Max Uplift 2=-35(LC 12), 6=-35(LC 12)
Max Grav 2=209(LC 1), 6=209(LC 1), 8=252(LC 1)

FORCES. (lb) - Max. Comp./Max. Ten. - All forces 250 (lb) or less except when shown.

NOTES-
1) Unbalanced roof live loads have been considered for this design.
2) Wind: ASCE 7-22; Vult=130mph (3-second gust) Vasd=101mph; TCDL=4.2psf; BCDL=6.0psf; h=15ft; B=45ft; L=24ft; eave=4ft; Cat. II; Exp B; Encl., GCpi=0.18; MWFRS (directional) and C-C Zone3 zone; cantilever left and right exposed ;C-C for members and forces & MWFRS for reactions shown; Lumber DOL=1.60 plate grip DOL=1.60
3) Building Designer / Project engineer responsible for verifying applied roof live load shown covers rain loading requirements specific to the use of this truss component.
4) Provide adequate drainage to prevent water ponding.
5) Gable requires continuous bottom chord bearing.
6) This truss has been designed for a 10.0 psf bottom chord live load nonconcurrent with any other live loads.
7) * This truss has been designed for a live load of 20.0psf on the bottom chord in all areas where a rectangle 3-6-0 tall by 2-0-0 wide will fit between the bottom chord and any other members.
8) Provide mechanical connection (by others) of truss to bearing plate capable of withstanding 100 lb uplift at joint(s) 2, 6.
9) See Standard Industry Piggyback Truss Connection Detail for Connection to base truss as applicable, or consult qualified building designer.

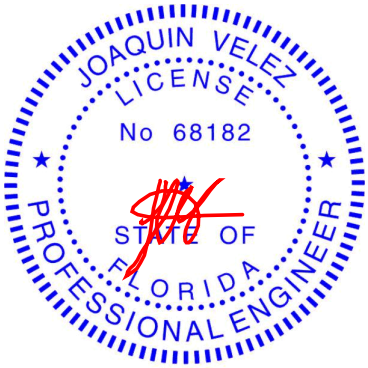

Joaquin Velez PE No.68182
MiTek Inc. DBA MiTek USA FL Cert 6634
16023 Swingley Ridge Rd. Chesterfield, MO 63017
Date:
July 25,2024

Job	Truss	Truss Type	Qty	Ply	2508-CR-2 Car
6243113	PB3	Piggyback	4	1	T34534240 Job Reference (optional)

Tibbetts Lumber Co., LLC (Ocala, FL), Ocala, FL - 34472, 8.730 s Jul 11 2024 MiTek Industries, Inc. Wed Jul 24 11:27:08 2024 Page 1
ID:Ts3RJ0261_Xu2fYgSyBHAWzZSLZ-QsdheSGA49vTTB4N4408QeVHH76CCDdAv?bHqcyuswX

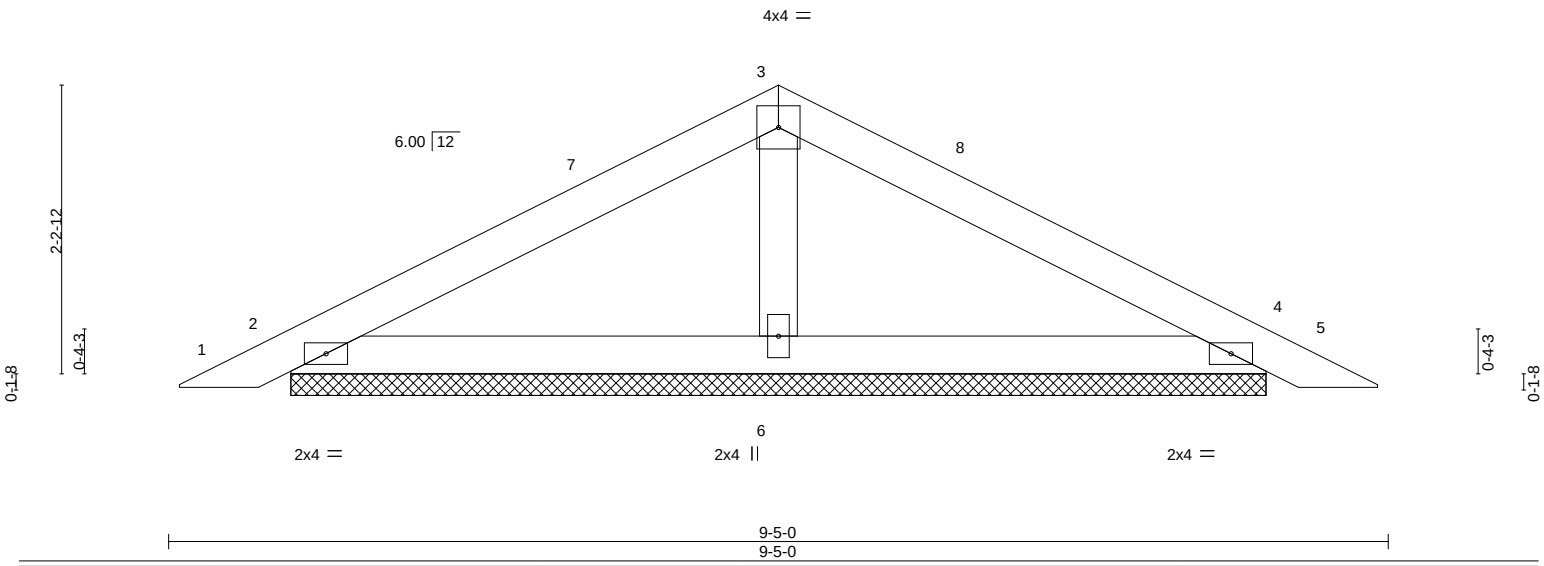

LOADING (psf)			SPACING- 2-0-0		CSI.		DEFL.	in	(loc)	l/defl	L/d	PLATES	GRIP
TCLL	20.0		Plate Grip DOL	1.25	TC	0.25	Vert(LL)	0.01	5	n/r	120	MT20	244/190
TCDL	10.0		Lumber DOL	1.25	BC	0.14	Vert(CT)	0.01	5	n/r	120		
BCLL	0.0	*	Rep Stress Incr	YES	WB	0.02	Horz(CT)	0.00	4	n/a	n/a		
BCDL	10.0		Code FBC2023/TPI2014		Matrix-P							Weight: 29 lb	FT = 20%

LUMBER-
TOP CHORD 2x4 SP No.2
BOT CHORD 2x4 SP No.2
OTHERS 2x4 SP No.2

BRACING-
TOP CHORD Structural wood sheathing directly applied or 6-0-0 oc purlins.
BOT CHORD Rigid ceiling directly applied or 10-0-0 oc bracing.

REACTIONS. (size) 2=7-6-6, 4=7-6-6, 6=7-6-6
Max Horz 2=-36(LC 10)
Max Uplift 2=-38(LC 12), 4=-38(LC 12)
Max Grav 2=188(LC 1), 4=188(LC 1), 6=294(LC 1)

FORCES. (lb) - Max. Comp./Max. Ten. - All forces 250 (lb) or less except when shown.

NOTES-
1) Unbalanced roof live loads have been considered for this design.
2) Wind: ASCE 7-22; Vult=130mph (3-second gust) Vasd=101mph; TCDL=4.2psf; BCDL=6.0psf; h=15ft; B=45ft; L=24ft; eave=4ft; Cat. II; Exp B; Encl., GCpi=0.18; MWFRS (directional) and C-C Zone3 0-4-11 to 3-4-11, Zone1 3-4-11 to 4-8-8, Zone3 4-8-8 to 9-0-5 zone; cantilever left and right exposed ;C-C for members and forces & MWFRS for reactions shown; Lumber DOL=1.60 plate grip DOL=1.60
3) Building Designer / Project engineer responsible for verifying applied roof live load shown covers rain loading requirements specific to the use of this truss component.
4) Gable requires continuous bottom chord bearing.
5) This truss has been designed for a 10.0 psf bottom chord live load nonconcurrent with any other live loads.
6) * This truss has been designed for a live load of 20.0psf on the bottom chord in all areas where a rectangle 3-6-0 tall by 2-0-0 wide will fit between the bottom chord and any other members.
7) Provide mechanical connection (by others) of truss to bearing plate capable of withstanding 100 lb uplift at joint(s) 2, 4.
8) See Standard Industry Piggyback Truss Connection Detail for Connection to base truss as applicable, or consult qualified building designer.

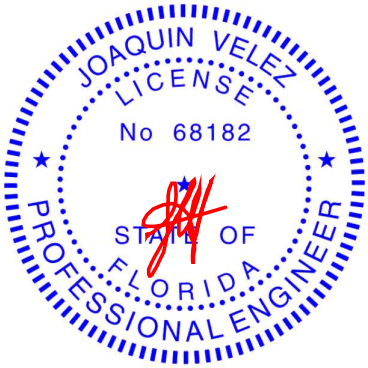

Joaquin Velez PE No.68182
MiTek Inc. DBA MiTek USA FL Cert 6634
16023 Swingley Ridge Rd. Chesterfield, MO 63017
Date:
July 25,2024

Job	Truss	Truss Type	Qty	Ply	2508-CR-2 Car
6243113	PB4	Piggyback	1	1	T34534241 Job Reference (optional)

Tibbetts Lumber Co., LLC (Ocala, FL), Ocala, FL - 34472, 8.730 s Jul 11 2024 MiTek Industries, Inc. Wed Jul 24 11:27:09 2024 Page 1
ID:Ts3RJ0261_Xu2fYgSyBHAWzZSLZ-u3B3roHprT1K5LfaenXNyr1TwXSSxg_K7fLrN2yuswW

4-0-0 | 5-5-0 | 9-5-0
4-0-0 | 1-5-0 | 4-0-0

Scale = 1:18.1

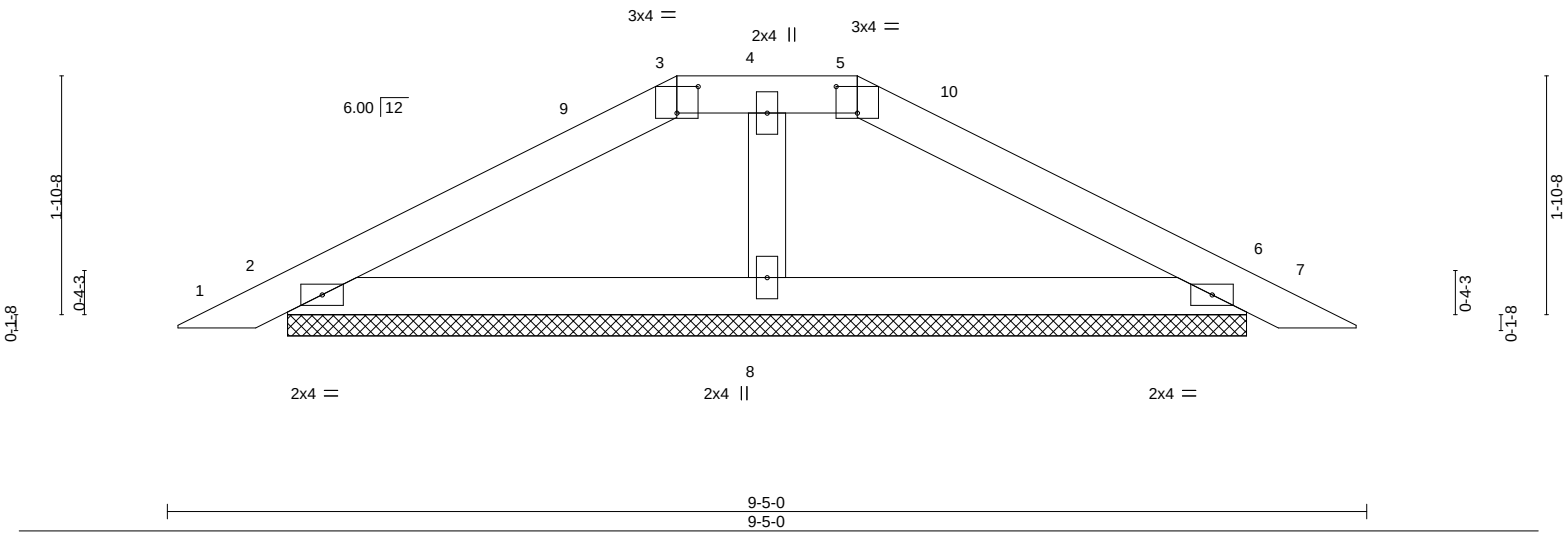

Plate Offsets (X,Y)-- [3:0-2-0,0-2-8], [5:0-2-0,0-2-8]

LOADING (psf)		SPACING- 2-0-0		CSI.		DEFL. in (loc) l/defl L/d					PLATES	GRIP
TCLL	20.0	Plate Grip DOL	1.25	TC	0.13	Vert(LL)	0.00	7	n/r	120	MT20	244/190
TCDL	10.0	Lumber DOL	1.25	BC	0.14	Vert(CT)	0.01	7	n/r	120		
BCLL	0.0 *	Rep Stress Incr	YES	WB	0.02	Horz(CT)	0.00	6	n/a	n/a		
BCDL	10.0	Code FBC2023/TPI2014		Matrix-S							Weight: 28 lb	FT = 20%

LUMBER-
TOP CHORD 2x4 SP No.2
BOT CHORD 2x4 SP No.2
OTHERS 2x4 SP No.2

BRACING-
TOP CHORD Structural wood sheathing directly applied or 6-0-0 oc purlins.
BOT CHORD Rigid ceiling directly applied or 10-0-0 oc bracing.

REACTIONS. (size) 2=7-6-6, 6=7-6-6, 8=7-6-6
Max Horz 2=-30(LC 10)
Max Uplift 2=-38(LC 12), 6=-38(LC 12)
Max Grav 2=203(LC 1), 6=203(LC 1), 8=264(LC 1)

FORCES. (lb) - Max. Comp./Max. Ten. - All forces 250 (lb) or less except when shown.

NOTES-
1) Unbalanced roof live loads have been considered for this design.
2) Wind: ASCE 7-22; Vult=130mph (3-second gust) Vasd=101mph; TCDL=4.2psf; BCDL=6.0psf; h=15ft; B=45ft; L=24ft; eave=4ft; Cat. II; Exp B; Encl., GCpi=0.18; MWFRS (directional) and C-C Zone3 0-4-11 to 3-4-11, Zone1 3-4-11 to 4-0-0, Zone3 4-0-0 to 9-0-5 zone; cantilever left and right exposed ;C-C for members and forces & MWFRS for reactions shown; Lumber DOL=1.60 plate grip DOL=1.60
3) Building Designer / Project engineer responsible for verifying applied roof live load shown covers rain loading requirements specific to the use of this truss component.
4) Provide adequate drainage to prevent water ponding.
5) Gable requires continuous bottom chord bearing.
6) This truss has been designed for a 10.0 psf bottom chord live load nonconcurrent with any other live loads.
7) * This truss has been designed for a live load of 20.0psf on the bottom chord in all areas where a rectangle 3-6-0 tall by 2-0-0 wide will fit between the bottom chord and any other members.
8) Provide mechanical connection (by others) of truss to bearing plate capable of withstanding 100 lb uplift at joint(s) 2, 6.
9) See Standard Industry Piggyback Truss Connection Detail for Connection to base truss as applicable, or consult qualified building designer.

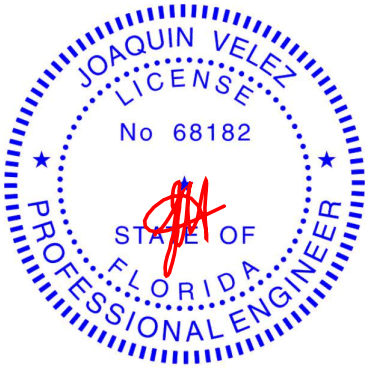

Joaquin Velez PE No.68182
MiTek Inc. DBA MiTek USA FL Cert 6634
16023 Swingley Ridge Rd. Chesterfield, MO 63017
Date:

July 25,2024

MiTek®
16023 Swingley Ridge Rd.
Chesterfield, MO 63017
314.434.1200 / MiTek-US.com

Symbols

PLATE LOCATION AND ORIENTATION

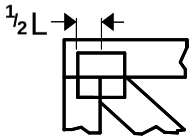

Center plate on joint unless x, y offsets are indicated. Dimensions are in ft-in-sixteenths. Apply plates to both sides of truss and fully embed teeth.

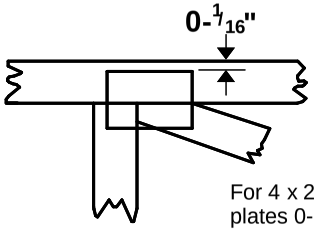

For 4 x 2 orientation, locate plates 0- 1/16" from outside edge of truss.

This symbol indicates the required direction of slots in connector plates.

* Plate location details available in MiTek software or upon request.

PLATE SIZE

4 x 4

The first dimension is the plate width measured perpendicular to slots. Second dimension is the length parallel to slots.

LATERAL BRACING LOCATION

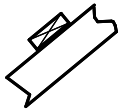

Indicated by symbol shown and/or by text in the bracing section of the output. Use T or I bracing if indicated.

BEARING

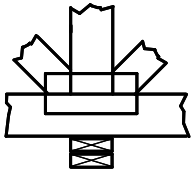

Indicates location where bearings (supports) occur. Icons vary but reaction section indicates joint number/letter where bearings occur. Min size shown is for crushing only.

Industry Standards:

ANSI/TPI1: National Design Specification for Metal Plate Connected Wood Truss Construction.
DSB-22: Design Standard for Bracing.
BCSI: Building Component Safety Information, Guide to Good Practice for Handling, Installing, Restraining & Bracing of Metal Plate Connected Wood Trusses.

Numbering System

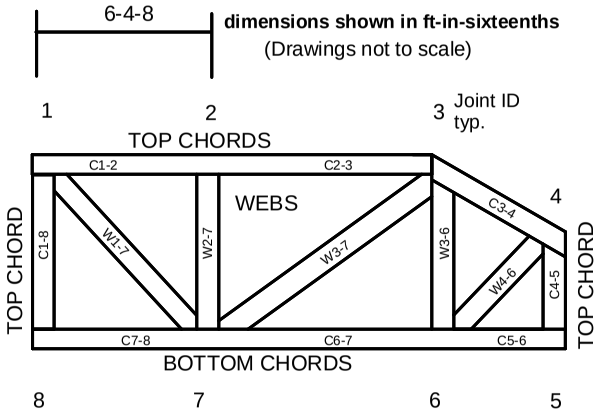

JOINTS ARE GENERALLY NUMBERED/LETTERED CLOCKWISE AROUND THE TRUSS STARTING AT THE JOINT FARTHEST TO THE LEFT.

CHORDS AND WEBS ARE IDENTIFIED BY END JOINT NUMBERS/LETTERS.

Product Code Approvals

ICC-ES Reports:

ESR-1988, ESR-2362, ESR-2685, ESR-3282
ESR-4722, ESL-1388

Design General Notes

Trusses are designed for wind loads in the plane of the truss unless otherwise shown.

Lumber design values are in accordance with ANSI/TPI 1 section 6.3 These truss designs rely on lumber values established by others.

MiTek®

General Safety Notes

Failure to Follow Could Cause Property Damage or Personal Injury

1. Additional stability bracing for truss system, e.g. diagonal or X-bracing, is always required. See BCSI.
2. Truss bracing must be designed by an engineer. For wide truss spacing, individual lateral braces themselves may require bracing, or alternative Tor I bracing should be considered.
3. Never exceed the design loading shown and never stack materials on inadequately braced trusses.
4. Provide copies of this truss design to the building designer, erection supervisor, property owner and all other interested parties.
5. Cut members to bear tightly against each other.
6. Place plates on each face of truss at each joint and embed fully. Knots and wane at joint locations are regulated by ANSI/TPI 1.
7. Design assumes trusses will be suitably protected from the environment in accord with ANSI/TPI 1.
8. Unless otherwise noted, moisture content of lumber shall not exceed 19% at time of fabrication.
9. Unless expressly noted, this design is not applicable for use with fire retardant, preservative treated, or green lumber.
10. Camber is a non-structural consideration and is the responsibility of truss fabricator. General practice is to camber for dead load deflection.
11. Plate type, size, orientation and location dimensions indicated are minimum plating requirements.
12. Lumber used shall be of the species and size, and in all respects, equal to or better than that specified.
13. Top chords must be sheathed or purlins provided at spacing indicated on design.
14. Bottom chords require lateral bracing at 10 ft. spacing, or less, if no ceiling is installed, unless otherwise noted.
15. Connections not shown are the responsibility of others.
16. Do not cut or alter truss member or plate without prior approval of an engineer.
17. Install and load vertically unless indicated otherwise.
18. Use of green or treated lumber may pose unacceptable environmental, health or performance risks. Consult with project engineer before use.
19. Review all portions of this design (front, back, words and pictures) before use. Reviewing pictures alone is not sufficient.
20. Design assumes manufacture in accordance with ANSI/TPI 1 Quality Criteria.
21. The design does not take into account any dynamic or other loads other than those expressly stated.

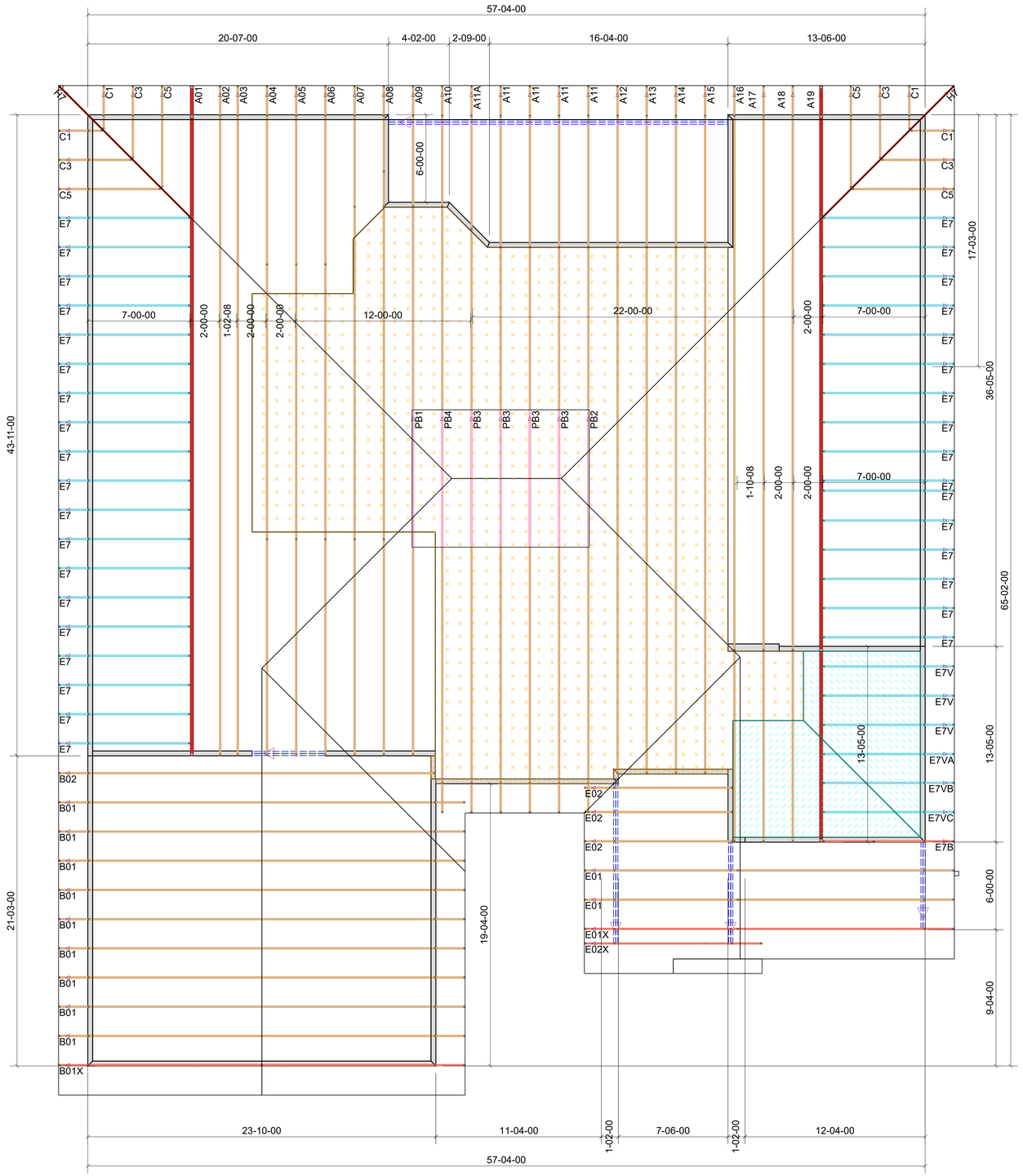

Hatch Legend

- 3/12 Vaulted Ceiling
- 10'-0" Flat Ceiling
- 10'-0" Brg Hgt

*** Approved By: _____ Delivery Date: _____

Please Print Name _____ Employed By _____ Approval Date _____

TIBBETTS LUMBER CO., LLC

6100 SE 68th Street, Ocala, FL 34472
Phone (352) 347-7661 Fax: (347) 347-7797

CLIENT APPROVAL

*** Signature of this document acknowledges that the client has reviewed this truss placement diagram in its entirety as in agreement with the following terms, including , but not limited to:

a) The client is responsible to verify the accuracy of information submitted for use in design, fabrication and scheduling. Any labor, material or time delay incurred from inadequate or incorrect information supplied from the client, will be at the client's expense. Any field measurements, by an associate of Tibbetts Lumber Co., LLC, are performed as a courtesy to the client and shall be verified by the client.

b) Design Criteria: The client acknowledges that the truss design criteria noted on this truss placement diagram meets or exceeds the design criteria specified by the building designer, engineer of record, and local and state building requirements

c) Fabrication and Delivery: One approved truss placement diagram must be returned to the truss manufacturer before fabrication and delivery will be scheduled. It is the client's responsibility to co-ordinate deliver dates with the truss manufacturer. The client shall provide a marked location for delivery, which must be accessible, level and clear of materials and debris. In lieu of this, truss will be delivered in the best available location at our driver's discretion. Care and handling of the trusses following delivery is the responsibility of the client.

d) Installation & Bracing: BCSI 2008 (Building Component Safety Information) WTCA/TPI guidelines shall be followed when handling, installing & bracing trusses. Temporary and/or permanent bracing and blocking is not included in this truss package. Trusses shall be braced to prevent rotation and provide lateral stability in accordance with the requirements specified in the construction documents for the building and on the individual truss design drawings. The overall stability of the truss system is the responsibility of the building designer.

e) Field Framing: 1.) Tray ceilings and other ceiling transitions my require field framing by others. 2.) Ceiling drops and valleys not shown are to be field framed by others. 3.) Overhangs may be over-length - cut to fit in the field. Overhangs are 2x4 or 2x6 - no blocking is applied. Corner jacks will be square cut and hip jacks will be double beveled

f) Repairs: Truss related problems are to be reported to the truss manufacturer ASAP, preferably in writing. Do Not Cut Any Trusses before contacting the truss manufacturer with specifics of the problem. Any field modifications made without an engineered repair drawing will be the responsibility of the client. No back charges or crane charges of any kind will be accepted unless specifically approved in writing by the truss manufacturer's management.

g) This Truss Placement Diagram was not created by an engineer, rather by Tibbetts Lumber Co, LLC staff and is purely to be used as an installation guide and does not require a seal. Truss design analysis are on the Truss Design Drawings, which may be sealed by the Truss Design Engineer.

TYPICAL DESIGN CRITERIA

Floor: Load: 55# psf; 40 TCLL, 10 TCDL, 00 BCLL, 05 BCDL; Dur.: 1.00
Design checked for 10 psf non-concurrent LL on BC.

Roof: Load: 40# psf; 20 TCLL, 10 TCDL, 00 BCLL, 10 BCDL; Dur.: 1.25
Design checked for 10 psf non-concurrent LL on BC

Mitek Engineering			Exposure	:	B
Building Code	:	FBC 2023	Mean Height	:	≤ 15'
	:	ASCE 7-22	Bldg. Category	:	II
	:	TPI 1-2014	Importance Factor	:	1.00
Truss Design	:	Comp. & Cladding	Enclosure	:	Enclosed
Uplift Calculations	:	MWFRS	Entry	:	Exposed to Wind
Wind Speed	:	130 mph US	Lanai	:	Exposed to Wind

ROOF CRITERIA			FLOOR CRITERIA		
T.C. Pitch	:	6/12	T.C. Size	:	PC42
B.C. Pitch	:	3/12	Depth	:	16"
T.C. Size	:	2x4	Spacing	:	16" O.C.
Heel Height	:	4 3/16"	Bearing	:	8"
Bearing	:	8"	Lumber	:	SP
Cantilever	:	0	Vapor barrier between floor & concrete by other. Floor trusses held back 3/4" at exterior wall, block and fill by other. Blocking for transfer of vertical load from above by others. Odd space floor trusses around plumbing as noted.		
Overhang	:	24"			
O.H. Cut	:	Plumb			
Spacing	:	24" O.C.			
Lumber	:	SP			

CONNECTORS

Roof Truss to Truss Connectors						Floor Truss to Truss Connectors			
A	TYP: THD26					*z	TYP: THD46		
*a	JUS24	G	THDH28-2	M	THD26	Q	THDH46	W	MSH422IF
B	THD26-2	H	THDH28-3	N		R	THD48	X	MSH426
C	THDH26-2	I	THDH210-3	O		S	THDH48	Y	MSH426IF
D	THDH26-3	J	GTWS2T			T	THDH410	Z	
E	THD28	K	GTWS3T			U	THDH610		
F	THDH28	L	GTWS4T			V	MSH422		

Installation shall be per connector manufacturer's guidelines. All connectors and tie downs other than truss to girder truss connectors are to be specified and supplied by others.

UPLIFT SUMMARY

1			11			21		
2			12			22		
3			13			23		
4			14			24		
5			15			25		
6			16			26		
7			17			27		
8			18			28		
9			19			29		
10			20			30		

Only points listed above have reactions > 5000# or Uplift > 1000#.
Values shown on the sealed Truss Design Drawings supersede the above

NOTES

N1 .
N2 .
N3 .
N4 .
N5 .
N6 .
N7 .
N8 .
N9 .

Diamond indicates left side of truss on truss design drawings

Client Info

Client: Adams Homes
Project: Model :2508-CR-2 Car
Address: Lot # 096 The Preserve at Laurel Lake
Lake City ,Fl

Rev.

Date	:	11/08/24	Scale	:	1/4" = 1'-0"	D= 1/4
Revised	:	.	Drawn By	:	Steve R.	
Sheet #	:	1 of 1	Job #	:	6243113	

Tibbetts Lumber Ocala

6100 SE 68th St
Ocala, FL 34472
Phone: 352-347-7661
www.tibbettslumber.com

Reaction Summary

Job Number: **6243113-R**
Quoted On:
Ordered On: **11/4/2024**
Scheduled Delivery On:
Product: **Roof**

Customer Information
Adams Homes of NW FL - Gainesville

Address & Phone	Contact
Phone:	

Job Information
The Preserve at Laurel Lake 096

Address	Lot	Sub-Division
715 SW Rosemary Dr Lake City FL 32024	096	The Preserve at Laurel Lake
	Sales Person: Chris Adam	Customer P.O. No.:
	Estimator: Steven Roberts	Designer: Steven Roberts

Loading				Building Code	Wind Design Method	Velocity	Exp Cat / Occ Cat	Wind Max	
TCLL	TCDL	BCLL	BCDL					TCDL	BCDL
20	10	0	10	FBC2023/TPI2014	MWFRS (Directional)/C-C hybrid Wind ASCE 7-22	130 mph	B II	4.2	6

Roof Trusses

Label	Profile	Qty / Ply	Span / Height	TC Pitch / BC Pitch	TC / BC	Reactions
A01		1	43-11-00	6 /12	2 x 6	Joint 11: 3631, -261; Joint 2: 3443, -229
		2-ply	4-09-15		2 x 6	
A02	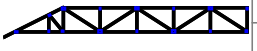	1	43-11-00	6 /12	2 x 4	Joint 10: 1741, -80; Joint 2: 1877, -133
		1-ply	5-09-15		2 x 4	
A03	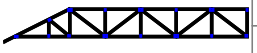	1	43-11-00	6 /12	2 x 4	Joint 10: 1741, -82; Joint 2: 1877, -132
		1-ply	6-05-03		2 x 4	
A04		1	43-11-00	6 /12	2 x 4	Joint 12: 1753, -70; Joint 2: 1891, -128
		1-ply	7-05-03		2 x 4	
A05	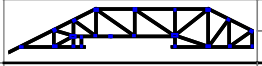	1	43-11-00	6 /12	2 x 4	Joint 11: 1753, -70; Joint 2: 1891, -128
		1-ply	8-05-03		2 x 4	
A06		1	43-11-00	6 /12	2 x 4	Joint 11: 1944, -70; Joint 2: 2117, -128
		1-ply	9-05-03		2 x 4	
A07		1	43-11-00	6 /12	2 x 4	Joint 13: 1984, -68; Joint 2: 2139, -116
		1-ply	10-05-03		2 x 4	
A08		1	43-11-00	6 /12	2 x 4	Joint 12: 1704, -58; Joint 2: 357, -110; Joint 23: 2007, -137
		1-ply	11-05-03		2 x 4	
A09		1	43-11-00	6 /12	2 x 4	Joint 12: 1704, -58; Joint 2: 357, -56; Joint 23: 2044, -88
		1-ply	11-05-03		2 x 4	
A10		1	45-10-00	6 /12	2 x 4	Joint 12: 1880, -132; Joint 2: 353, -140; Joint 23: 2080, -112
		1-ply	11-05-03		2 x 4	
A11		4	45-10-00	6 /12	2 x 4	Joint 11: 1716, -126; Joint 2: 327, -155; Joint 21: 2281, -150
		1-ply	11-05-03		2 x 4	
A11A		1	45-10-00	6 /12	2 x 4	Joint 11: 1789, -128; Joint 2: 326, -146; Joint 21: 2208, -135
		1-ply	11-05-03		2 x 4	
A12		1	45-02-00	6 /12	2 x 4	Joint 11: 1572, -62; Joint 2: 350, -76; Joint 20: 2283, -79
		1-ply	11-09-15		2 x 4	
A13		1	45-02-00	6 /12	2 x 4	Joint 12: 1585, -61; Joint 2: 336, -144; Joint 22: 2242, -164
		1-ply	10-09-15		2 x 4	
A14	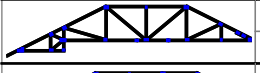	1	45-02-00	6 /12	2 x 4	Joint 10: 1597, -61; Joint 18: 2258, -86; Joint 2: 360, -70
		1-ply	9-09-15		2 x 4	
A15	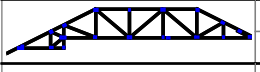	1	45-02-00	6 /12	2 x 4	Joint 11: 1390, -61; Joint 19: 2090, -87; Joint 2: 272, -70
		1-ply	8-09-15		2 x 4	
A16	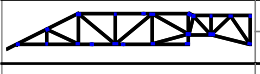	1	49-10-00	6 /12	2 x 4	Joint 14: 197, -41; Joint 17: 2765, -133; Joint 2: 1616, -105
		1-ply	7-09-15	-3 /12	2 x 4	
A17	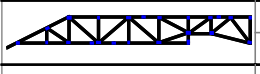	1	49-10-00	6 /12	2 x 4	Joint 14: 172, -45; Joint 17: 2461, -124; Joint 2: 1459, -109
		1-ply	6-09-15	-3 /12	2 x 4	
A18	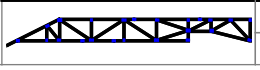	1	49-10-00	6 /12	2 x 4	Joint 14: 238, -43; Joint 17: 2370, -114; Joint 2: 1484, -114
		1-ply	5-09-15	-3 /12	2 x 4	

Roof Trusses

Label	Profile	Qty / Ply	Span / Height	TC Pitch / BC Pitch	TC / BC	Reactions
A19		1	49-10-00	6 /12	2 x 6	Joint 12 901 -34; Joint 15 4624 -318; Joint 2 2758 -181
		2-ply	4-09-15	-3 /12	2 x 6	
B01	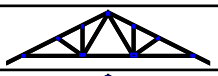	9	23-10-00	6 /12	2 x 4	Joint 2 1298 39; Joint 8 1298 39
		1-ply	7-03-07		2 x 4	
B01X		1	23-10-00	6 /12	2 x 4	*Continuous Support*
		1-ply	6-11-08		2 x 4	
B02	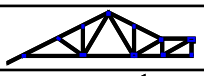	1	23-09-08	6 /12	2 x 4	Joint 14 1132 102; Joint 2 1304 38
		1-ply	7-03-07		2 x 4	
C1	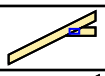	4	1-00-00	6 /12	2 x 4	Joint 2 290 -134; Joint 3 68 -101; Joint 4 19 6
		1-ply	1-09-15		2 x 4	
C3	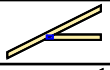	4	3-00-00	6 /12	2 x 4	Joint 2 292 -86; Joint 3 35 -14; Joint 4 55 17
		1-ply	2-09-15		2 x 4	
C5		4	5-00-00	6 /12	2 x 4	Joint 2 350 -71; Joint 3 114 -35; Joint 4 95 29
		1-ply	3-09-15		2 x 4	
E01	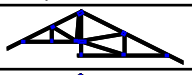	2	21-04-00	6 /12	2 x 4	Joint 12 1057 14; Joint 2 362 -96; Joint 6 593 -106
		1-ply	7-07-15		2 x 4	
E01X		1	21-04-00	6 /12	2 x 4	Joint 13 1141 -254; Joint 2 328 -115; Joint 8 562 -187
		1-ply	7-04-00		2 x 4	
E02	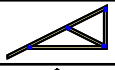	3	8-02-00	6 /12	2 x 4	Joint 2 461 -60; Joint 5 298 -28
		1-ply	5-04-15		2 x 4	
E02X	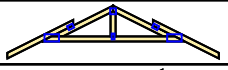	1	8-02-00	6 /12	2 x 4	Joint 2 444 -74; Joint 6 444 -74
		1-ply	3-00-08		2 x 4	
E7	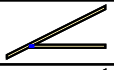	35	7-00-00	6 /12	2 x 4	Joint 2 422 -63; Joint 3 182 -62; Joint 4 135 41
		1-ply	4-09-15		2 x 4	
E7B	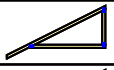	1	7-00-00	6 /12	2 x 4	Joint 2 418 -63; Joint 4 248 -21
		1-ply	4-09-15		2 x 4	
E7V	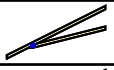	3	7-00-00	6 /12	2 x 4	Joint 2 422 -63; Joint 3 182 -63; Joint 4 135 41
		1-ply	4-09-15	3 /12	2 x 4	
E7VA	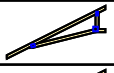	1	7-00-00	6 /12	2 x 4	Joint 2 422 -63; Joint 4 242 -27; Joint 5 17 5
		1-ply	4-09-15	3 /12	2 x 4	
E7VB	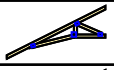	1	7-00-00	6 /12	2 x 4	Joint 2 422 -63; Joint 4 65 -24; Joint 5 185 2
		1-ply	4-09-15	3 /12	2 x 4	
E7VC	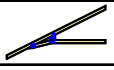	1	7-00-00	6 /12	2 x 4	Joint 2 422 -63; Joint 4 202 -51; Joint 5 96 29
		1-ply	4-09-15	3 /12	2 x 4	
H7	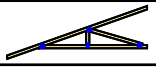	2	9-10-01	4.24 /12	2 x 4	Joint 2 583 -171; Joint 4 164 -50; Joint 5 271 18
		1-ply	4-09-07		2 x 4	
PB1	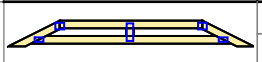	1	9-05-00	6 /12	2 x 4	Joint 2 184 -29; Joint 6 188 -29; Joint 8 297 -8
		1-ply	11-12		2 x 4	
PB2	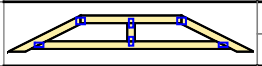	1	9-05-00	6 /12	2 x 4	Joint 2 209 -35; Joint 6 209 -35; Joint 8 252 7
		1-ply	1-04-08		2 x 4	
PB3	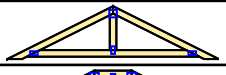	4	9-05-00	6 /12	2 x 4	Joint 2 188 -38; Joint 4 188 -38; Joint 6 294 18
		1-ply	2-04-00		2 x 4	
PB4	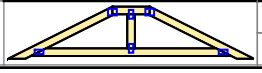	1	9-05-00	6 /12	2 x 4	Joint 2 203 -38; Joint 6 203 -38; Joint 8 264 19
		1-ply	1-11-12		2 x 4	