DATE 10/10/2011

Columbia County Building Permit

This Permit Must Be Prominently Posted on Premises During Construction

PERMIT
000029724

APPLICANT JESSE CULBRETH PHONE 904-477-9506

ADDRESS 5120 SUNBEAM ROAD JACKSONVILLE FL 32257

OWNER CADY & CADY ENTERPRISES, LLC PHONE 904-880-7455

ADDRESS 498 SW RING COURT LAKE CITY FL 32025

CONTRACTOR JACOB SAMECK PHONE 904-268-1008

LOCATION OF PROPERTY 47 SOUTH, RIGHT ON RING COURT, FOLLOW TO END SEE EXISTING BUILDING

TYPE DEVELOPMENT INTERIOR BUILDOUT ESTIMATED COST OF CONSTRUCTION 1000000.00

HEATED FLOOR AREA 18000.00 TOTAL AREA 18000.00 HEIGHT 24.00 STORIES 1

FOUNDATION _____ WALLS FRAMED ROOF PITCH _____ FLOOR _____

LAND USE & ZONING INDUSTRIAL MAX. HEIGHT _____

Minimum Set Back Requirments: STREET-FRONT _____ REAR _____ SIDE _____

NO. EX.D.U. 1 FLOOD ZONE X DEVELOPMENT PERMIT NO. _____

PARCEL ID 19-4S-17-08558-111 SUBDIVISION CANNON CREEK CENTER

LOT 6 BLOCK _____ PHASE _____ UNIT _____ TOTAL ACRES 5.60

		CGC1509555	Jesse
Culvert Permit No.	Culvert Waiver	Contractor's License Number	Applicant/Owner/Contractor
EXISTING	11-291-N	BK	TC	N
Driveway Connection	Septic Tank Number	LU & Zoning checked by	Approved for Issuance	New Resident

COMMENTS: INTERIOR BUILDOUT-NO ADDITIONAL SQUARE FOOTAGE ADDED

Check # or Cash 28961

FOR BUILDING & ZONING DEPARTMENT ONLY

Temporary Power _____ date/app. by Foundation _____ date/app. by Monolithic _____ date/app. by (footer/Slab)

Under slab rough-in plumbing _____ date/app. by Slab _____ date/app. by Sheathing/Nailing _____ date/app. by

Framing _____ date/app. by Insulation _____ date/app. by

Rough-in plumbing above slab and below wood floor _____ date/app. by Electrical rough-in _____ date/app. by

Heat & Air Duct _____ date/app. by Peri. beam (Lintel) _____ date/app. by Pool _____ date/app. by

Permanent power _____ date/app. by C.O. Final _____ date/app. by Culvert _____ date/app. by

Pump pole _____ date/app. by Utility Pole _____ date/app. by M/H tie downs, blocking, electricity and plumbing _____ date/app. by

Reconnection _____ date/app. by RV _____ date/app. by Re-roof _____ date/app. by

BUILDING PERMIT FEE $ 5000.00 CERTIFICATION FEE $ 90.00 SURCHARGE FEE $ 90.00

MISC. FEES $ 0.00 ZONING CERT. FEE $ _____ FIRE FEE $ 0.00 WASTE FEE $ _____

FLOOD DEVELOPMENT FEE $ _____ FLOOD ZONE FEE $ 25.00 CULVERT FEE $ _____ **TOTAL FEE** 5205.00

INSPECTORS OFFICE _____ CLERKS OFFICE CH

NOTICE: IN ADDITION TO THE REQUIREMENTS OF THIS PERMIT, THERE MAY BE ADDITIONAL RESTRICTIONS APPLICABLE TO THIS PROPERTY THAT MAY BE FOUND IN THE PUBLIC RECORDS OF THIS COUNTY. AND THERE MAY BE ADDITIONAL PERMITS REQUIRED FROM OTHER GOVERNMENTAL ENTITIES SUCH AS WATER MANAGEMENT DISTRICTS, STATE AGENCIES, OR FEDERAL AGENCIES.

"WARNING TO OWNER: YOUR FAILURE TO RECORD A NOTICE OF COMMENCEMENT MAY RESULT IN YOUR PAYING TWICE FOR IMPROVEMENTS TO YOUR PROPERTY. IF YOU INTEND TO OBTAIN FINANCING, CONSULT WITH YOUR LENDER OR AN ATTORNEY BEFORE RECORDING YOUR NOTICE OF COMMENCEMENT."

EVERY PERMIT ISSUED SHALL BECOME INVALID UNLESS THE WORK AUTHORIZED BY SUCH PERMIT IS COMMENCED WITHIN 180 DAYS AFTER ITS ISSUANCE, OR IF THE WORK AUTHORIZED BY SUCH PERMIT IS SUSPENDED OR ABANDONED FOR A PERIOD OF 180 DAYS AFTER THE TIME THE WORK IS COMMENCED. A VALID PERMIT RECIEVES AN APPROVED INSPECTION EVERY 180 DAYS. WORK SHALL BE CONSIDERED NOT SUSPENDED, ABANDONED OR INVALID WHEN THE PERMIT HAS RECIEVED AN APPROVED INSPECTION WITHIN 180 DAYS OT THE PREVIOUS INSPECTION.

The Issuance of this Permit Does Not Waive Compliance by Permittee with Deed Restrictions.

#29724

Ossi & Myler, Inc.

CONSULTING ENGINEERS

Thomas DiGiacomo
#221000
C Columbia
Cady & Cady

Heating and Cooling Load Summary
(Per Florida Building Code 13-407.ABC.1 Sizing, exception no.1)

New Corporate Office for
Cady & Cady Studios, Inc.

All Zones/Spaces Phase I

Project Name/Owner:	Cady & Cady Studios, Inc.
Project Address:	496 SW Ring Court, Lake City, Fl
Sizing Method Used:	Cooling: ASHRAE CLTD/CLF Calculation Procedure
	Heating: ASHRAE TC4.1, Load Calculation Data and Procedures
Outdoor Dry Bulb:	Summer: 94 Deg. F
	Winter: 29 Deg. F
Outdoor Wet Bulb:	Cooling: 76.9 Deg. F
Indoor Design:	Summer: 75 Deg. F and 50% RH
	Winter: 72 Deg. F

Admin/Office Areas

Area:	12,673 SF
Total Heating Required	389,104 BTUH
Total Sensible Gain	474,523 BTUH
Total Latent Gain	107,477 BTUH
Grains Water Difference	82-64 = 18 Grains per lb.
Total Cooling Required	582,000 BTUH = 48.5 Tons

Warehouse/Printing Process Area

Area:	5,728 SF
Total Heating Required	160,325 BTUH
Total Sensible Gain	182,286 BTUH
Total Latent Gain	54,449 BTUH
Grains Water Difference	84.5 - 64 = 20.5 Grains per lb.
Total Cooling Required	236,735 BTUH = 19.7 Tons

10/11/11

1934 Retaw Street
Jacksonville, Fl 32210
Tel: 904-381-8946 Fax: 904-384-1395

COLUMBIA COUNTY
911 ADDRESSING / GIS DEPARTMENT

P. O. Box 1787, Lake City, FL 32056-1787
263 NW Lake City Ave., Lake City, FL 32055
Telephone: (386) 758-1125 * Fax: (386) 758-1365 * Email: ron_croft@columbiacountyfla.com

ADDRESS ASSIGNMENT DATA

The Columbia County Board of County Commissioners has passed Ordinance 2001-9, which provides for a uniform numbering system. A copy of this ordinance is available in the Clerk of Court records, located in the courthouse. This new numbering system will increase the efficiency of POLICE, FIRE AND EMERGENCY MEDICAL vehicles responding to calls within Columbia County by immediately identifying the location of the caller.

A Residential or Other Structure(s) on Parcel Number:
19-4S-17-08558-111

Address Assignment(s):
496 SW RING CT, LAKE CITY, FL 32025
498 SW RING CT, LAKE CITY, FL 32025

Any questions concerning this information should be referred to the Columbia County 911 Addressing / GIS Department at the address or telephone number above.

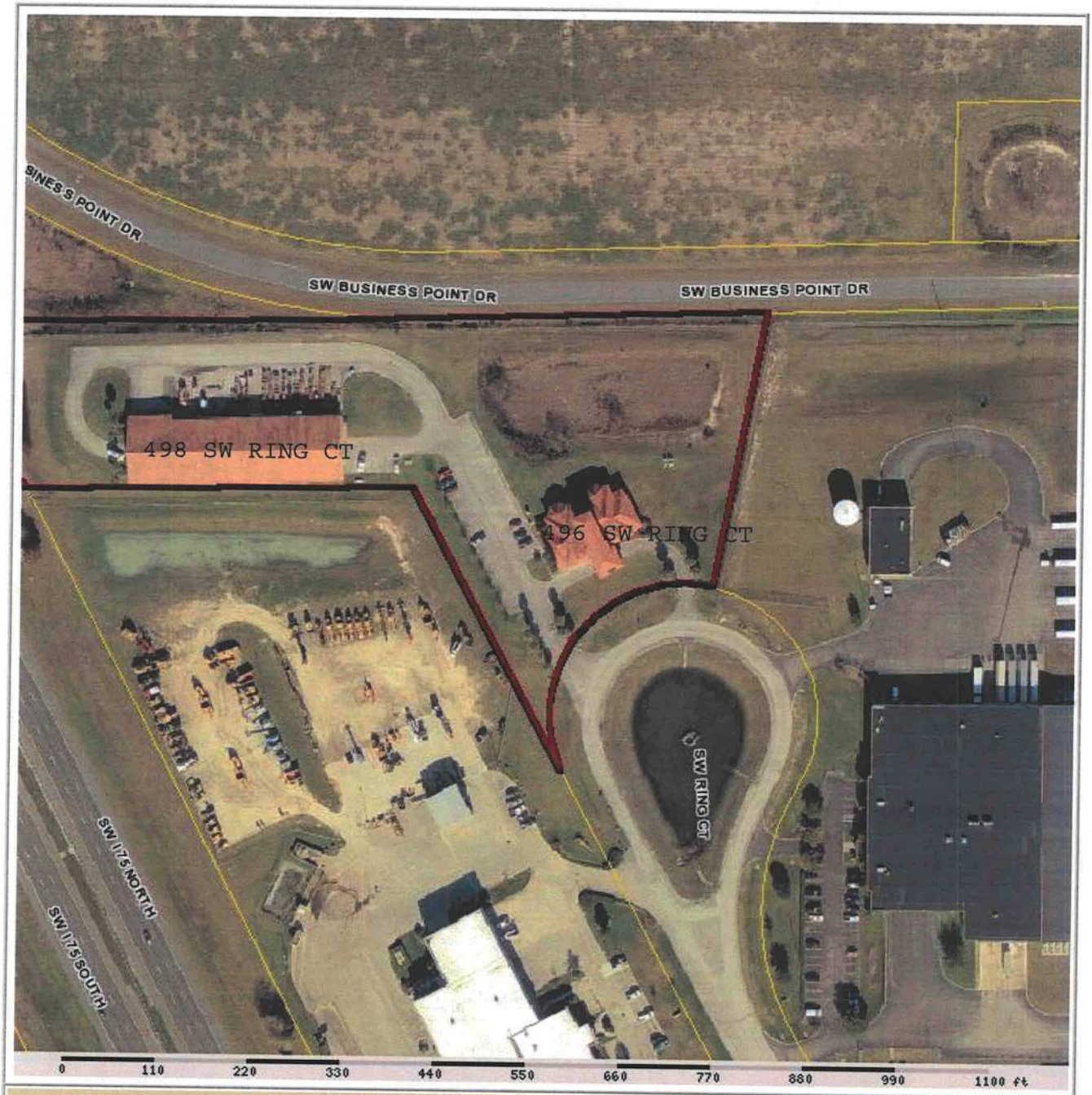

Columbia County Property Appraiser

J. Doyle Crews - Lake City, Florida 32055 | 386-758-1083

PARCEL: 19-4S-17-08558-111 - STORAGE/OF (004817)

BEG NW COR OF LOT 7, RUN SE 225 FT, E 458.63 FT TO W LINE OF LOT 6, SE 383.69 FT TO W R/W CANNON CREEK RD, NE ALONG R/W 356.03 FT, NE 328.04 FT, W 976

Name:	C & H CONTRACTING	**2010 Certified Values**	
Site:	496 SW RING CT	Land	$378,000.00
Mail:	PROFFESSIONALS INC P O BOX 2105 LAKE CITY, FL 32056	Bldg	$700,387.00
		Assd	$1,149,611.00
		Exmpt	$0.00
Sales Info	9/19/1995$135,500.00 V / Q	Taxbl	Cnty: $1,149,611 Other: $1,149,611 | Schl: $1,149,611

NOTES:

29724

NICHOLAS
PAUL
GEISLER
ARCHITECT
N.C.A.R.B. Certified

1758 NW Brown Road
Lake City, FL 32055
386/755-9021

20 MARCH 2012

TROY CREWS, BUILDING INSPECTOR
COLUMBIA COUNTY, BUILDING DEPT.
COLUMBIA COUNTY COURTHOUSE ANNEX
LAKE CITY, FLORIDA 32055

RE: CADY & CADY - ART FROM THE HEART
PERMIT Nr.: _____

DEAR SIR:

PLEASE BE ADVISED OF THE FOLLOWING CHANGE TO THE CONSTRUCTION DOCUMENTS FOR THE ABOVE REFERENCED PROJECT:

IN CONSULTATION WITH DAVID BOOZER, FIRE MARSHAL FOR COLUMBIA COUNTY FIRE DEPARTMENT, THE REAR PERSONEL DOOR LOCATED ON THE WEST END OF THE BUILDNG SHALL BE RELOCATED TO THE SOUTH ALONG THAT SAME WALL TO A POINT OUTSIDE OF THE ENCLOSED MEZZANINE AREA. THE EXACT LOCATION OF THE DOOR TO BE DETERMINED IN THE FIELD, IN CONSULTATION WITH THE OWNER.

SHOULD YOU HAVE ANY FURTHER QUESTIONS WITH THIS, PLEASE CALL FOR ASSISTANCE.

YOURS TRULY,
NICHOLAS PAUL GEISLER, ARCHITECT AR0007005

CERTIFICATE OF

OCCUPANCY

COLUMBIA COUNTY, FLORIDA

Department of Building and Zoning Inspection

This Certificate of Occupancy is issued to the below named permit holder for the building and premises at the below named location, and certifies that the work has been completed in accordance with the Columbia County Building Code.

Parcel Number 19-4S-17-08558-111 **Building permit No.** 000029724

Use Classification INTERIOR BUILDOUT **Fire:** 0.00

Permit Holder JACOB SAMECK **Waste:**

Owner of Building CADY & CADY ENTERPRISES, LLC. **Total:** 0.00

Location: 498 SW RING CRT, LAKE CITY, FL 32025

Date: 04/24/2012

Building Inspector

POST IN A CONSPICUOUS PLACE
(Business Places Only)

luke@cadystudios.com

Ossi & Myler, Inc.
CONSULTING ENGINEERS

Heating and Cooling Load Summary
(Per Florida Building Code 13-407.ABC.1 Sizing, exception no.1)

29784

New Corporate Office for
Cady & Cady Studios, Inc.

All Zones/Spaces Phase I

Project Name/Owner:	Cady & Cady Studios, Inc.
Project Address:	496 SW Ring Court, Lake City, Fl
Sizing Method Used:	Cooling: ASHRAE CLTD/CLF Calculation Procedure
	Heating: ASHRAE TC4.1, Load Calculation Data and Procedures
Outdoor Dry Bulb:	Summer: 94 Deg. F
	Winter: 29 Deg. F
Outdoor Wet Bulb:	Cooling: 76.9 Deg. F
Indoor Design:	Summer: 75 Deg. F and 50% RH
	Winter: 72 Deg. F

Admin/Office Areas

Area:	12,673 SF
Total Heating Required	389,104 BTUH
Total Sensible Gain	474,523 BTUH
Total Latent Gain	107,477 BTUH
Grains Water Difference	82-64 = 18 Grains per lb.
Total Cooling Required	582,000 BTUH = 48.5 Tons

Warehouse/Printing Process Area

Area:	5,728 SF
Total Heating Required	160,325 BTUH
Total Sensible Gain	182,286 BTUH
Total Latent Gain	54,449 BTUH
Grains Water Difference	84.5 - 64 = 20.5 Grains per lb.
Total Cooling Required	236,735 BTUH = 19.7 Tons

10/11/11

1934 Retaw Street
Jacksonville, Fl 32210
Tel: 904-381-8946 Fax: 904-384-1395

Ossi & Myler, Inc.
CONSULTING ENGINEERS

Heating and Cooling Load Summary
(Per Florida Building Code 13-407.ABC.1 Sizing, exception no.1)

New Corporate Office for
Cady & Cady Studios, Inc.

All Zones/Spaces Phase I

Project Name/Owner:	Cady & Cady Studios, Inc.
Project Address:	496 SW Ring Court, Lake City, Fl
Sizing Method Used:	Cooling: ASHRAE CLTD/CLF Calculation Procedure
	Heating: ASHRAE TC4.1, Load Calculation Data and Procedures
Outdoor Dry Bulb:	Summer: 94 Deg. F
	Winter: 29 Deg. F
Outdoor Wet Bulb:	Cooling: 76.9 Deg. F
Indoor Design:	Summer: 75 Deg. F and 50% RH
	Winter: 72 Deg. F

Admin/Office Areas

Area:	12,673 SF
Total Heating Required	389,104 BTUH
Total Sensible Gain	474,523 BTUH
Total Latent Gain	107,477 BTUH
Grains Water Difference	82-64 = 18 Grains per lb.
Total Cooling Required	582,000 BTUH = 48.5 Tons

Warehouse/Printing Process Area

Area:	5,728 SF
Total Heating Required	160,325 BTUH
Total Sensible Gain	182,286 BTUH
Total Latent Gain	54,449 BTUH
Grains Water Difference	84.5 - 64 = 20.5 Grains per lb.
Total Cooling Required	236,735 BTUH = 19.7 Tons

10/11/11

1934 Retaw Street
Jacksonville, Fl 32210
Tel: 904-381-8946 Fax: 904-384-1395

Ossi & Myler, Inc.
CONSULTING ENGINEERS

Heating and Cooling Load Summary
(Per Florida Building Code 13-407.ABC.1 Sizing, exception no.1)

New Corporate Office for
Cady & Cady Studios, Inc.

All Zones/Spaces Phase I

Project Name/Owner:	Cady & Cady Studios, Inc.
Project Address:	496 SW Ring Court, Lake City, Fl
Sizing Method Used:	Cooling: ASHRAE CLTD/CLF Calculation Procedure
	Heating: ASHRAE TC4.1, Load Calculation Data and Procedures
Outdoor Dry Bulb:	Summer: 94 Deg. F
	Winter: 29 Deg. F
Outdoor Wet Bulb:	Cooling: 76.9 Deg. F
Indoor Design:	Summer: 75 Deg. F and 50% RH
	Winter: 72 Deg. F

Admin/Office Areas

Area:	12,673 SF
Total Heating Required	389,104 BTUH
Total Sensible Gain	474,523 BTUH
Total Latent Gain	107,477 BTUH
Grains Water Difference	82-64 = 18 Grains per lb.
Total Cooling Required	582,000 BTUH = 48.5 Tons

Warehouse/Printing Process Area

Area:	5,728 SF
Total Heating Required	160,325 BTUH
Total Sensible Gain	182,286 BTUH
Total Latent Gain	54,449 BTUH
Grains Water Difference	84.5 - 64 = 20.5 Grains per lb.
Total Cooling Required	236,735 BTUH = 19.7 Tons

10/11/11

1934 Retaw Street
Jacksonville, Fl 32210
Tel: 904-381-8946 Fax: 904-384-1395

Ossi & Myler, Inc.
CONSULTING ENGINEERS

Heating and Cooling Load Summary
(Per Florida Building Code 13-407.ABC.1 Sizing, exception no.1)

New Corporate Office for
Cady & Cady Studios, Inc.

All Zones/Spaces Phase I

Project Name/Owner:	Cady & Cady Studios, Inc.
Project Address:	496 SW Ring Court, Lake City, Fl
Sizing Method Used:	Cooling: ASHRAE CLTD/CLF Calculation Procedure
	Heating: ASHRAE TC4.1, Load Calculation Data and Procedures
Outdoor Dry Bulb:	Summer: 94 Deg. F
	Winter: 29 Deg. F
Outdoor Wet Bulb:	Cooling: 76.9 Deg. F
Indoor Design:	Summer: 75 Deg. F and 50% RH
	Winter: 72 Deg. F

Admin/Office Areas

Area:	12,673 SF
Total Heating Required	389,104 BTUH
Total Sensible Gain	474,523 BTUH
Total Latent Gain	107,477 BTUH
Grains Water Difference	82-64 = 18 Grains per lb.
Total Cooling Required	582,000 BTUH = 48.5 Tons

Warehouse/Printing Process Area

Area:	5,728 SF
Total Heating Required	160,325 BTUH
Total Sensible Gain	182,286 BTUH
Total Latent Gain	54,449 BTUH
Grains Water Difference	84.5 - 64 = 20.5 Grains per lb.
Total Cooling Required	236,735 BTUH = 19.7 Tons

10/11/11

1934 Retaw Street
Jacksonville, Fl 32210
Tel: 904-381-8946 Fax: 904-384-1395

#29724

NOTICE OF COMMENCEMENT

Clerk's Office Stamp

Inst. 201112015880 Date:10/17/2011 Time:11:40 AM
DC,P.DeWitt Cason,Columbia County Page 1 of 1 B:1223 P:518

Tax Parcel Identification Number:

19-4s-17s08558-111

THE UNDERSIGNED hereby gives notice that improvements will be made to certain real property, and in accordance with Section 713.13 of the Florida Statutes, the following information is provided in this **NOTICE OF COMMENCEMENT.**

1. Description of property *(legal description)*: BEG NW COR OF LOT 7, RUN SE 225 FT, E 458.63 FT TO W LINE OF LOT 6, SE 383.69 FT TO N R/W CANNON CREEK RD, NE ALONG R/W 356.03 FT, NE 328.04 FT, W 916.65 FT TO POB BEING PART OF LOT 6 & 7 CANNON CREEK CENTER. ORB 811-1320 CORR DEED 864-850.
   a) Street *(job)* Address: 496 Ring Court Lake City, FL
2. General description of improvements: Interior Build out of non load bearing walls with MEP's and finishes
3. Owner Information
   a) Name and address: Cady & Cady Enterprises. 1015 Kings Ave, Jacksonville, FL 32207
   b) Name and address of fee simple titleholder (If other than owner) _____
   c) Interest in property Owner/User
4. Contractor Information
   a) Name and address: Tenant Contractors, Inc 5120 Sunbeam Road, Jacksonville, FL 32256
   b) Telephone No.: 904-268-1008 Fax No. (Opt.) 904-268-8995
5. Surety Information
   a) Name and address: _____
   b) Amount of Bond: _____
   c) Telephone No.: _____ Fax No. (Opt.) _____
6. Lender
   a) Name and address: Bank of America - Merril Lynch 6000 Fairview Road, Charlotte NC 28210
   b) Phone No. 980-275-5186
7. Identity of person within the State of Florida designated by owner upon whom notices or other documents may be served:
   a) Name and address: _____
   b) Telephone No.: _____ Fax No. (Opt.) _____
8. In addition to himself, owner designates the following person to receive a copy of the Lienor's Notice as provided in Section 713.13(l)(b), Florida Statutes:
   a) Name and address: Tenant Contractors, Inc. 5120 Sunbeam Road, Jacksonville, FL 32256
   b) Telephone No.: 904-268-1008 Fax No. (Opt.) 904-268-8995
9. Expiration date of Notice of Commencement **(the expiration date is one year from the date of recording unless a different date is specified):** _____

WARNING TO OWNER: ANY PAYMENTS MADE BY THE OWNER AFTER THE EXPIRATION OF THE NOTICE OF COMMENCEMENT ARE CONSIDERED IMPROPER PAYMENTS UNDER CHAPTER 713, PART I, SECTION 713.13, FLORIDA STATUTES, AND CAN RESULT IN YOUR PAYING TWICE FOR IMPROVEMENTS TO YOUR PROPERTY; A NOTICE OF COMMENCEMENT MUST BE RECORDED AND POSTED ON THE JOB SITE BEFORE THE FIRST INSPECTION. IF YOU INTEND TO OBTAIN FINANCING, CONSULT YOUR LENDER OR AN ATTORNEY BEFORE COMMENCING WORK OR RECORDING YOUR NOTICE OF COMMENCEMENT.

STATE OF FLORIDA
COUNTY OF COLUMBIA

10. _____
Signature of Owner or Owner's Authorized Office/Director/Partner/Manager

_____
Printed Name

The foregoing instrument was acknowledged before me, a Florida Notary, this 14th day of October, 20 11, by:

Josh Cady as _____ **(type of authority, e.g. officer, trustee, attorney fact) for** _____ **(name of party on behalf of whom instrument was executed).**

Personally Known ✓ OR Produced Identification ____ Type _____

Notary Signature _____ Notary Stamp or Seal:

Notary Public State of Florida
Anson Simque
My Commission DD983018
Expires 04/18/2014

AND

11. Verification pursuant to Section 92.525, Florida Statutes. Under penalties of perjury, I declare that I have read the foregoing and that the facts stated in it are true to the best of my knowledge and belief.

_____
Signature of Natural Person Signing (in line #10 above.)

COLUMBIA COUNTY FIRE RESCUE
Life Safety Services
P.O. BOX 1529 Lake City, Florida 32056
Office (386) 754-7071 Fax (386) 754-7064

Division Chief
David L. Boozer

01 September 2011

TO: Troy Crews
Columbia County Building Department

FROM: David L. Boozer
Division Chief / Fire Marshal
Florida State Fire Inspector #146595

RE: Application # 1108-41
Cady & Cady Enterprises LLC

A plan review was conducted of the Cady & Cady Enterprises future renovations of a building located at the Cannon Creek Center located of Ring Court, Lake City, Florida, which currently enjoys a classification as Storage Occupancy. With the submitted plans owner is requesting a change of use from Storage to a Business Occupancy. Thus, the provided plans were reviewed under Chapter 38, New Business, under the Florida Fire Prevention Code, 2006 edition. I recommend approval with the following conditions;

- Building Address
  - New and existing buildings shall have approved **address numbers** placed in a position to be plainly legible and visible from the street or road, in contrast with their background. At the minimum, numbers shall be not less than 3 inches in height for residential buildings and at least 6 inches in height for all other buildings. *NFPA 1:10.13.1.1 & NFPA 1:10.13.1.2*

- Door Hardware
  - All **exit or exit access doors** shall be arranged to open readily from the egress side whenever the building is occupied. **Locks or latches** if provided shall not require the use of a key, tool, or special knowledge or effort for operation from the egress side. The releasing mechanism for any latch shall be located not less than 34 in and not more than 48 in above the finished floor. The door must not require more than 1 action to open. *NFPA 1:14.5.2.2*
  - Any door in a required means of egress from an area having an occupant load of 100 or more persons shall be permitted to be provided with a latch or lock only if latch or lock is panic hardware or fire exit hardware complying with 7.2.1. *NFPA 12.2.2.2.3*

- Portable Fire Extinguishers
  - **Portable fire extinguishers** requires a license or permit of organizations and individuals who service, recharge, test, mark, inspect, install, or hydro test fire extinguishers. It will be necessary to use a Licensed Fire Extinguisher Contractor for identifying the location and type of extinguisher to use. *FSS 633.061*

- Minimum 2A rated extinguisher shall be located in **egress path** with not more than 75-foot travel distance. Additional extinguishers of B rating may be required if flammable or combustible liquids are present. Class C rated extinguishers are required whenever fires may involve energized electrical equipment. *NFPA 1:13.6*
- **Mounted** on brackets or in cabinets, with top not more than 5 feet above floor, and bottom not less than 4" above floor. (less than 40 lbs) *NFPA 1:13.6.3.7 & NFPA 1:13.6.3.10*
- All portable fire extinguishers must have a current (less than 12 months old) **inspection tag** by a licensed fire extinguisher contractor. *FAC 69A-21.237*

- *Emergency Lighting
  - Emergency lighting shall be provided for not less than 11/2 hours in the event of failure of normal lighting. Emergency Lighting facilities shall be arranged to provide initial illumination that is not less than an average of 1-candle (10.8 lux) and at any point, not less than.01 ft-candle (6.5 lux), measured along the path of egress at floor level. *NFPA101:7.9*

- *Marking of Means of Egress
  - **Exits.** Exits, other than main exterior exit doors that obviously and clearly are identifiable as exits, shall be marked by an approved sign that is readily visible from any direction of exit access. NFPA 7.10.1.2
  - **Exit door tactical signage**. Tactical signage shall be provided to meet the following criteria, unless otherwise provided in 7.10.1.4:
    - Tactical signage shall be located at each exit door requiring an exit sign.
    - Tactical signage shall read as follows: **EXIT**.
    - Tactical signage shall comply with ICC/ANSI A117.1, *American National Standard for Accessible and Usable Buildings and Facilities. NFPA7.10.1.3*
      - All exterior exits shall be marked with an approved EXIT signage
- Light Weight Truss Marking
  - Florida Statute, Section 633.027, (2008) requires the owner of any commercial, industrial or multiunit residential structure of three units or more constructed of light-frame trusses, to install a symbol adopted by rule of the State Fire Marshal's Office. This rule establishes the dimensions, color, and location of the symbol to be applied to every commercial, industrial and multiunit residential structure of three units or more constructed of light-frame trusses.

A more detailed Life Safety Plan which includes all aspects of the entire building,

- Identify all exterior doors
- Emergency Lighting
- Marking of Means of Egress, EXIT Signs
- Travel Distances
- Portable Fire Extinguisher locations

Although this is not a requirement per the Florida Fire Prevention Code, I would request that a Fire Alarm System be installed throughout the building due to its size and complexity. This would aid in advising you and your staff of any possible dangers that may be present in the building quicker notification, than having to physically evacuate the entire building. This system will also monitor the building when occupied or unoccupied which would help to protect your investment. Also, could possibly help reduce insurance rating.

Should you require any additional information, please feel free to contact my office.

David L. Boger

1:47:24 PM 3/29/2012

Licensee Details

Licensee Information

Name:	**OSSI, LAWRENCE** (Primary Name)
	(DBA Name)
Main Address:	**1934 RETAW STREET** **JACKSONVILLE Florida 32210**
County:	**DUVAL**
License Mailing:	**1934 RETAW STREET** **JACKSONVILLE FL 32210**
County:	**DUVAL**
LicenseLocation:	

License Information

License Type:	**Professional Engineer**
Rank:	**Prof Engineer**
License Number:	**51463**
Status:	**Current,Active**
Licensure Date:	**03/06/1997**
Expires:	**02/28/2013**

Special Qualifications	**Qualification Effective**
Electrical & Computer	**03/06/1997**

View Related License Information

View License Complaint

FLORIDA STATE WIDE APPROVALS

In October 2003 the State of Florida began the state-wide approval system. This system provides a means for manufacturers to submit technical documentation certifying compliance with the FBC (Florida Building Code). All required information is submitted and validated prior to the state issuing an approval. The state approvals are accepted in all jurisdictions within Florida (except Dade County at this time).

The new product approval system includes a website and database available for searching approved entities and products. The web site (www.floridabuilding.org) is available to the public to view, print or save design drawings, reports and other information on approved products.

DETERMINATION OF WINDLOAD

Building designers are required by state law to provide the required windload in PSF (pounds per square foot) on the actual building plans. The designers and engineers must determine what windload is required by taking into account wind speeds, building geometry, exposure categories and importance factors. If this information is not provided, it can be a tedious task to determine what the load should be. Fortunately DASMA (Door and Access Systems Manufacturers Association) has lobbied to amend the code to add a windload table specifically for garage doors (rolling doors included). This table (see appendix A) is in the 2003 version of the code, and should be used when the actual design pressures are not specified.

COOKSON APPROVALS

Florida State Approval # 2211
The current approval is based on an evaluation report prepared by a Florida registered Engineer. The approval covers 3 main door design types: Type A, Type B and Type C.
The following table provides the maximum design pressures at a given width for each door type and slat/gauge combination. These doors can also be provided in Broward County (HVHZ) when the concrete anchors (if required) are spaced as tested (see notes on design drawings).

Dade County Approvals (see table for specific NOA numbers)
There are Dade county NOA's (Notice of Acceptances) for each of the three types: A,B & C. The approvals however are good only up to the specified widths and pressures. These doors have been tested to comply with the HVHZ provisions – specifically impact and cyclic load tests in addition to the static load test.

DESIGN DRAWINGS

The design drawings are provided for submittals. The guide opening widths are provided in table with maximum design pressures. The design of the door is fixed and will meet the windload indicated at a given width.

USING THE PRESSURE TABLE

The pressure table has been organized to read from the upper left corner – moving down and to the right is the direction of increasing size and pressure. The design types A,B & C have been color coded in the table to match the corresponding design drawings.

THE COOKSON COMPANY

Florida State Approval Chart

Florida Approval #: 2211

Rolling Door
DESIGN WINDLOAD (PSF)

BLAT TYPE, THICKNESS,WINDLOCK STYLE, WALL ANGLE THICKNESS

	DESIGN TYPE "A"		DESIGN TYPE "B"			DESIGN TYPE "C"		
	STAMPED W/L-5/16 Wall Angle		CAST W/L, DBL ANGLE WL Bars -5/16 Wall Angle			CAST W/L, 6" GUIDE -1/2 Wall Angle		
Max Width	#5-0236GA	#5-0296GA	#5-0296GA	#4-0356GA	#45-0356GA/0236	#4-0356GA	#45-0356/0236GA	Max Width
10'	±95.8	±98.3	+121.9 / - 131.9	+141.9 / - 151.9	+193.5 / - 203.5			10'
11'	±81.1	±82.9	+103 / -111.6	+115.4 / -124.0	+152.5 / -161.1			11'
12'	±69.9	±71.2	+88.6 / - 96.2	+96.2 / - 103.8	+123.5 / - 131.2	±186.6	±216.6	12'
13'	±61.1	±62.1	+77.4 / - 84.2	+81.8 / - 88.6	+102.5 / - 109.3	±161.9	±184.6	13'
14'	±54.0	±54.8	+68.4 / - 74.5	+70.7 / - 76.8	+86.7 / - 92.8	±142.3	±159.9	14'
14'-4"	±52.0	±52.7	+65.9 / - 71.7	+67.6 / - 73.5	+82.3 / - 88.2	±136.7	±152.9	14'-4"
15'	±48.3	±48.9	+61.1 / - 66.6	+62.0 / - 67.5	+74.5 / - 80.0	±126.5	±140.3	15'
16'	±43.5	±44.0	+55 / - 60	+55 / - 60	+65.0 / - 70.0	±113.5	±124.5	16'
17'	±39.5	±39.8	+49.9 / - 54.5	+49.3 / - 53.9	+57.4 / - 61.9	±102.6	±111.5	17'
18'	±36.0	±36.4	+45.5 / - 49.7	+44.5 / - 48.7	+51.1 / - 55.3	±93.4	±100.7	18'
19'	-	±33.3	+41.8 / - 45.7	+40.4 / - 44.3	+45.9 / - 49.7	±85.5	±91.5	19'
20'	-	±30.7	+38.5 / - 42.1	+36.9 / - 40.5	+41.5 / - 45.1	±78.7	±83.8	20'
21'	-	±28.5	+35.7 / - 39.0	+33.9 / - 37.2	+37.8 / - 41.1	±72.8	±77.0	21'
22'	-	±26.5	+33.2 / - 36.3	+31.4 / - 34.5	+34.6 / - 37.7	±67.6	±71.2	22'
23'	-	±24.7	+31.0 / - 33.9	+29.1 / - 32.0	+31.9 / - 34.8	±63.0	±66.1	23'
24'	-	±23.1	+29.0 / - 31.7	+27.1 / - 29.8	+29.5 / - 32.2	±58.9	±61.6	24'
25'	-	-	-	+25.3 / - 27.9	+27.4 / - 30.0	±55.3	±57.5	25'
26'	-	-	-	+23.7 / - 26.2	+25.5 / - 28.0	±52	±54	26'
27'	-	-	-	-	+23.9 / - 26.2	±49.1	±50.8	27'
28'	-	-		-	+22.4 / - 24.6	±46.4	±47.9	28'
29'	-	-	-	-	-	±43.9	±45.3	29'
30'	-	-	-	-	-	±41.7	±42.9	30'
31'	-	-	-	-	-	±39.6	±40.7	31'
32'	-	-	-	-	-	±37.7	±38.7	32'
33'					-	±36.0	±36.8	33'
34'	-				-	±34.4	±35.2	34'
35'	-				-	±32.9	±33.6	35'
36'	-	-	-	-	-	±31.5	±32.1	36'
37'	-	-	-	-	-	±30.2	±30.8	37'
38'	-	-	-	-	-	±29.0	±29.5	38'
39'	-	-	-	-	-	±27.9	±28.3	39'
40'	-	-	-	-	-	±26.8	±27.3	40'

Note: 1) See Design Drawings for door construction Details
2) Table based on Evaluation Report ER-04-003
3) Test Doors tested to TAS 201,TAS 202& TAS 203

4/29/2004 - REV 0 - Original Document

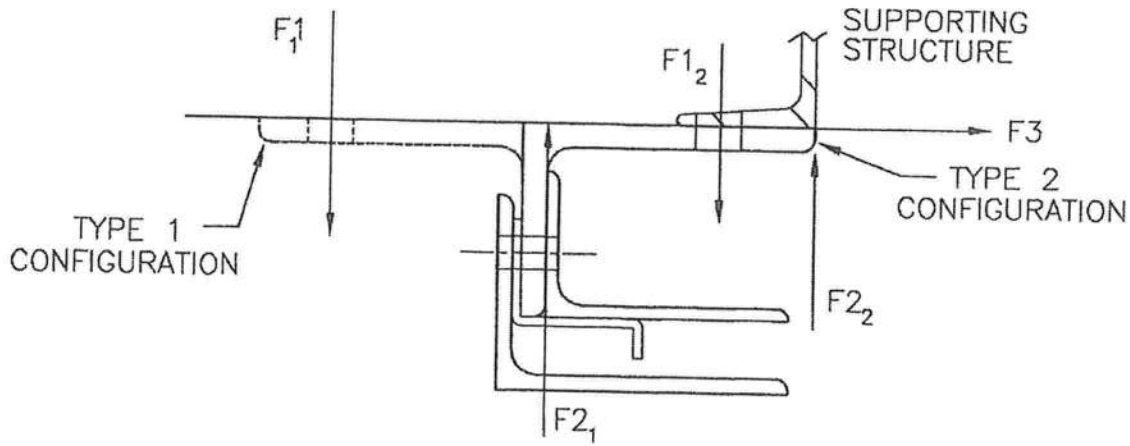

FORCE ON STRUCTURE (#/FT.)

TYPE 1 GUIDE CONFIGURATION						TYPE 2 GUIDE CONFIGURATION					
POSITIVE			NEGATIVE			POSITIVE			NEGATIVE		
F1	F2	F3	F1	F2	F3	F1	F2	F3	F1	F2	F3
3109	2431	3839	4412	5090	3839	8860	8182	3839	8062	8740	3839

FLORIDA WIND DOORS, DESIGN TYPE C

NO.	BY	DATE	REVISION
3			
2			
1			
	RG	4/29/04	ORIGINAL DRAWING

COOKSON ROLLING DOORS
2417 S. 50TH AVE
PHOENIX, AZ 85043
800 TULIP DRIVE
GASTONIA, NC 28052

FLORIDA WIND DOORS, DESIGN TYPE C

ENG NAME: JOSEPH H. DIXON JR.	COOKSON APPROVAL
DISCIPLINE: STRUCTURAL	BY:
FLA REGISTRATION: 7768	DATE:
DWG NO. WLCD-003-C-2004	3 OF 3

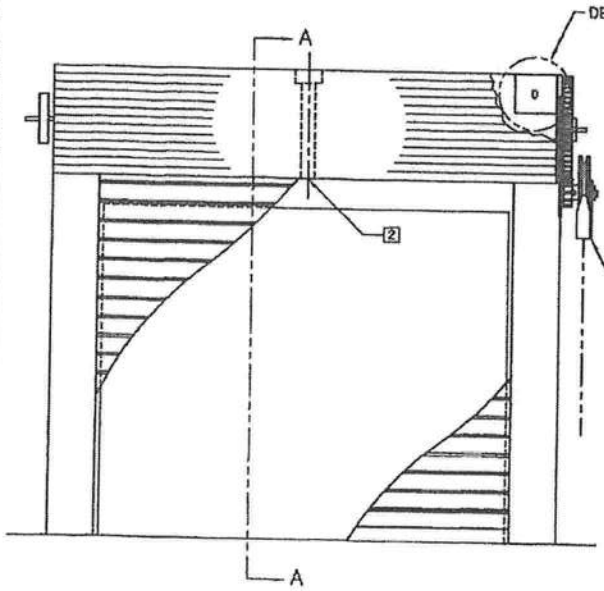

COIL-SIDE ELEVATION

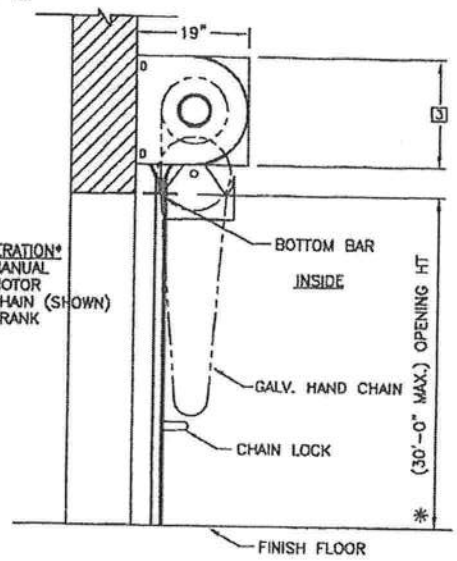

SECTION A-A

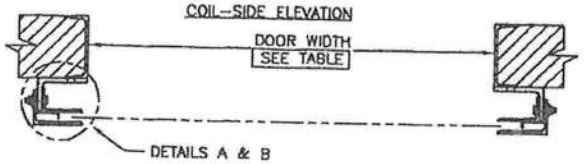

NOTES:

1) THESE DOORS HAVE BEEN EVALUATED TO COMPLY WITH THE 2001 FLORIDA BUILDING CODE.
2. INTERMEDIATE SUPPORT(S) IS FURNISHED FOR DOORS OVER 14' WIDE.
3. BRACKET SIZE VARIES BASED ON SLAT TYPE AND DOOR SIZE.
4. DOORS WITH CONCRETE ANCHORS SPACED AT 6" O.C. COMPLY WITH THE HVHZ (HIGH VELOCITY HURRICANE ZONE) PROVISIONS OF THE 2001 FLORIDA BUILDING CODE.
5. ADDITIONAL ANGLE CLIP REQUIRED FOR DOORS OVER 26' WIDE OR 20' HIGH.

NO.	BY	DATE	REVISION
3			
2			
1			
	RG	4/29/04	ORIGINAL DRAWING

COOKSON ROLLING DOORS
2417 S. 50TH AVE
PHOENIX, AZ 85043
800 TULIP DRIVE
GASTONIA, NC 28052

FLORIDA WIND DOORS, DESIGN TYPE C

ENG NAME: JOSEPH H. DIXON JR.	COOKSON APPROVAL
DISCIPLINE: STRUCTURAL	BY:
FLA REGISTRATION: 7768	DATE:
DWG NO. WLCD-003-C-2004	1 OF 3

DESIGN WIND PRESSURES IN PSF

DOOR WIDTH UP TO	#4 .0356	#45 .0356/.0236	DOOR WIDTH UP TO	#4 .0356	#45 .0356/.0236
12'	±186.6	±216.6	27'	±49.1	±50.8
13'	±161.9	±184.6	28'	±46.4	±47.9
14'	±142.3	±159.9	29'	±43.9	±45.3
14'-4"	±136.7	±152.9	30'	±41.7	±42.9
15'	±126.5	±140.3	31'	±39.6	±40.7
16'	±113.5	±124.5	32'	±37.7	±38.7
17'	±102.6	±111.5	33'	±36.0	±36.8
18'	±93.4	±100.7	34'	±34.4	±35.2
19'	±85.5	±91.5	35'	±32.9	±33.6
20'	±78.7	±83.8	36'	±31.5	±32.1
21'	±72.8	±77.0	37'	±30.2	±30.8
22'	±67.8	±71.2	38'	±29.0	±29.5
23'	±63.0	±66.1	39'	±27.9	±28.3
24'	±58.9	±61.6	40'	±26.8	±27.3
25'	±55.3	±57.5			
26'	±52	±54			

FASTENER SCHEDULE

4	WINDLOCK SPACING	CONCRETE ANCHOR HILTI KWIK BOLT II	MINIMUM EMBEDMENT	WALL ANGLE BOLTS (GRADE 5)	GUIDE ANGLE ASSY BOLTS (GRADE 5)
HVHZ	1	3/4ø @ 6" O.C.	4 3/4"	3/4ø @ 16" O.C.	1/2ø @ 18" O.C.
NON-HVHZ	1	3/4ø @ 11" O.C.	4 3/4"	3/4ø @ 16" O.C.	1/2ø @ 18" O.C.

CONCRETE 4000 PSI MIN.

FLORIDA WIND DOORS, DESIGN TYPE C

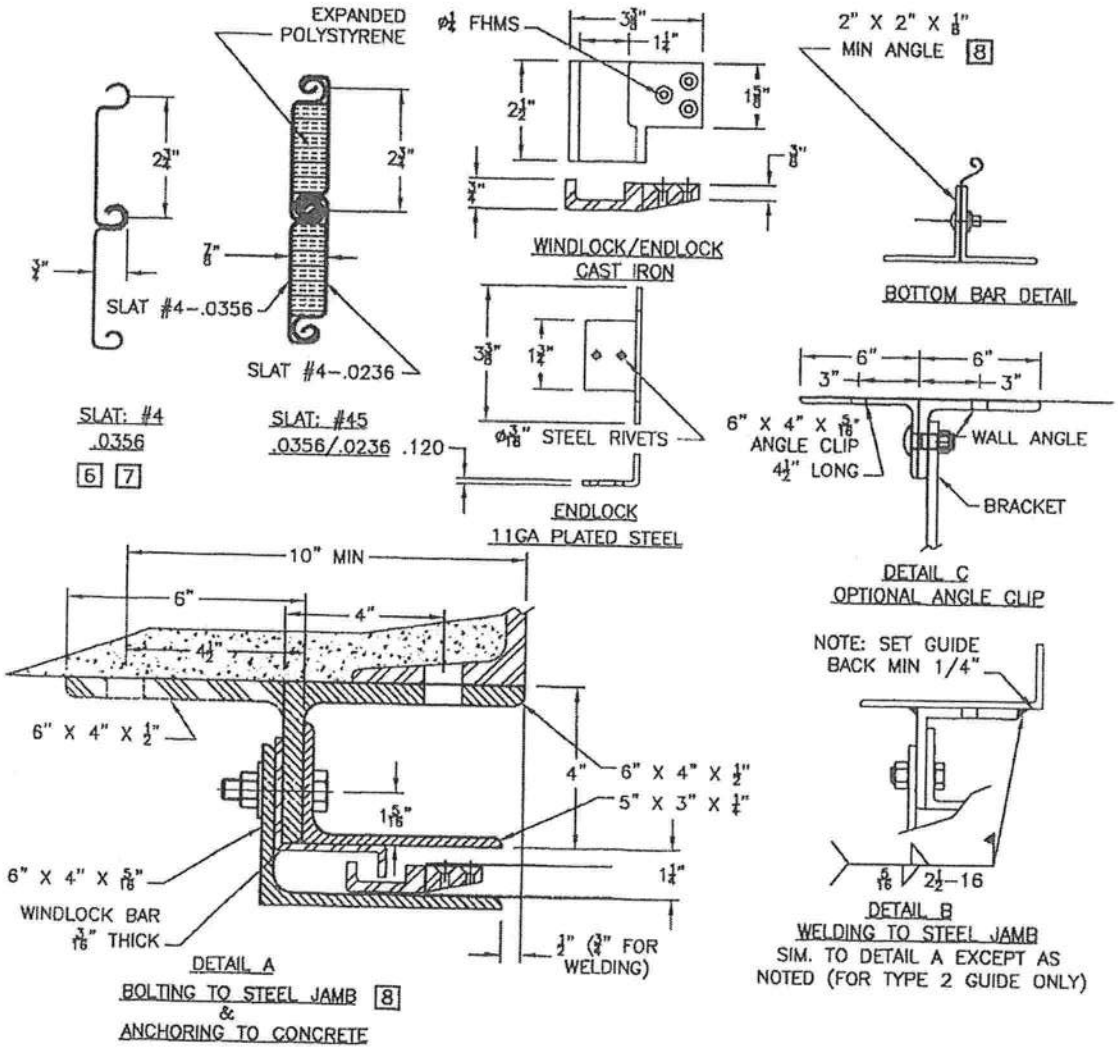

FLORIDA WIND DOORS, DESIGN TYPE C

NOTES:

6 SLAT MATL: GALVANIZED STEEL OR STAINLESS STEEL.

7 DECIMAL THICKNESS LISTED IS MINIMUM.

8 GUIDE/BOTTOM BAR MATL: STEEL OR STAINLESS STEEL.

NO.	BY	DATE	REVISION
3			
2			
1			
	RG	4/29/04	ORIGINAL DRAWING

COOKSON ROLLING DOORS
2417 S. 50TH AVE
PHOENIX, AZ 85043
800 TULIP DRIVE
GASTONIA, NC 28052

FLORIDA WIND DOORS, DESIGN TYPE C	
ENG NAME: JOSEPH H. DIXON JR.	COOKSON APPROVAL
DISCIPLINE: STRUCTURAL	BY:
FLA REGISTRATION: 7768	DATE:
DWG NO. WLCD-003-C-2004	2 OF 3

THE COOKSON COMPANY

FLORIDA APPROVED DOORS

THE 2001 FLORIDA BUILDING CODE:

The 2001 Florida Building Code (FBC) establishes the windload requirements for the entire state of Florida. The wind speed map and wind force (windload) provisions are based on the ASCE 7-98 Standard (American Society of Civil Engineers) is shown below. Each county has defined the required design wind speed and specific locations of wind lines (if any occur in that county). Specific county wind speed maps are available at Florida Building Commission website (www.dca.state.fl.us/fhcd/fbc).

Special provisions are provided in the code for the HVHZ (High Velocity Hurricane Zone), defined as Dade and Broward counties (far Southeastern corner of the State). The HVHZ provisions are essentially the adoption of the previous South Florida Building Code. Dade County and the HVHZ will be discussed later.

State of Florida Wind-Borne Debris Region

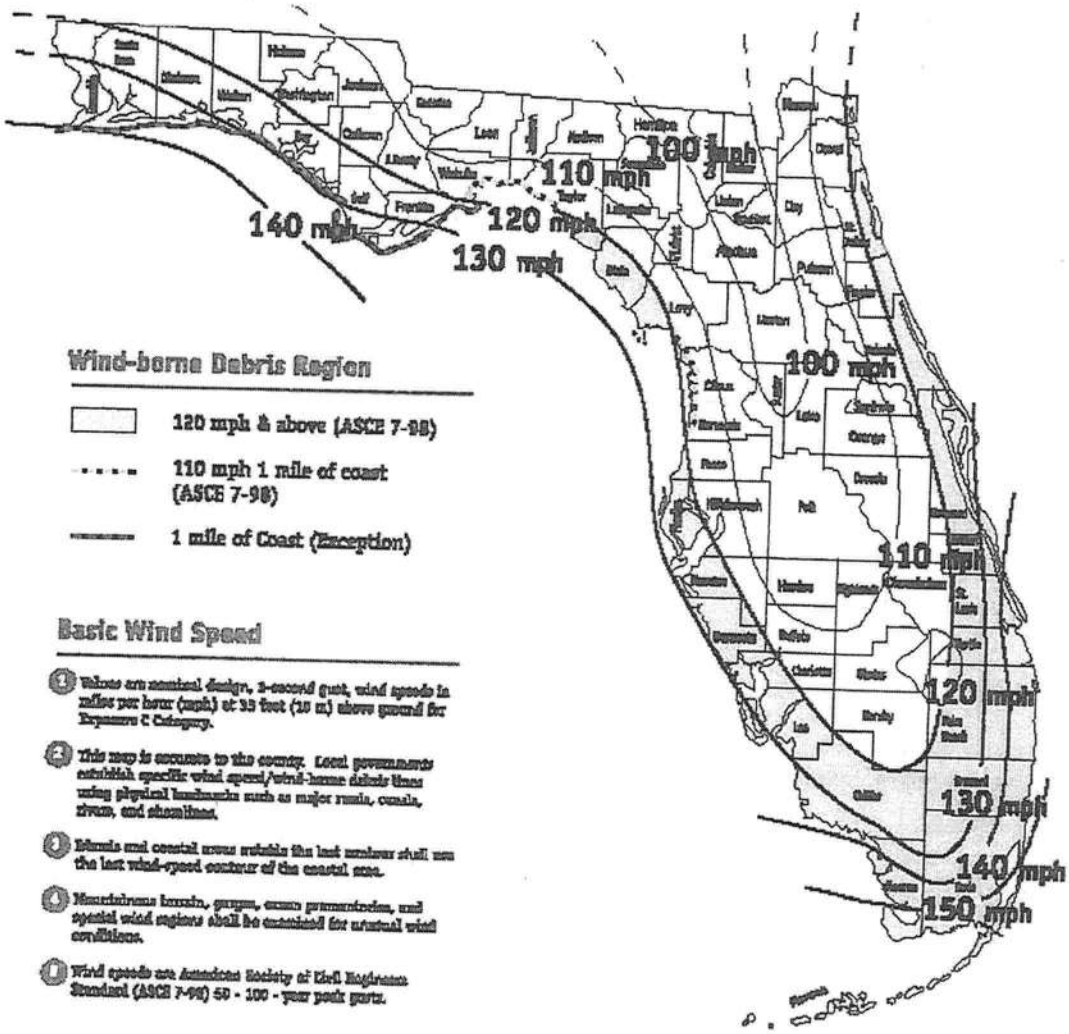

PRODUCT APPROVAL SPECIFICATION SHEET

Location: 496 Ring Court, Lake City, FL **Project Name:** Cady & Cady

As required by Florida Statute 553.842 and Florida Administrative Code 9B-72, please provide the information and the product approval number(s) on the building components listed below if they will be utilized on the construction project for which you are **applying for a building permit on or after April 1, 2004**. We recommend you contact your local product supplier should you not know the product approval number for any of the applicable listed products. More information about statewide product approval can be obtained at www.floridabuilding.org

Category/Subcategory	Manufacturer	Product Description	Approval Number(s)
A. EXTERIOR DOORS			
1. Swinging			
2. Sliding			
3. Sectional			
4. Roll up	Cookson Co.	Rolling Door - 10'	2211
5. Automatic			
6. Other			
B. WINDOWS			
1. Single hung			
2. Horizontal Slider			
3. Casement			
4. Double Hung			
5. Fixed			
6. Awning			
7. Pass –through			
8. Projected			
9. Mullion			
10. Wind Breaker			
11 Dual Action			
12. Other			
C. PANEL WALL			
1. Siding			
2. Soffits			
3. EIFS			
4. Storefronts	~~Pella~~ YKK AP	A: Doors B: Storefront [redacted]	A: 5851.1 B: 8731.1
5. Curtain walls	YKK AP	Glass Curtain Wall	5487.1
6. Wall louver			
7. Glass block			
8. Membrane			
9. Greenhouse			
10. Other			
D. ROOFING PRODUCTS			
1. Asphalt Shingles			
2. Underlayments			
3. Roofing Fasteners			
4. Non-structural Metal Rf			
5. Built-Up Roofing			
6. Modified Bitumen			
7. Single Ply Roofing Sys			
8. Roofing Tiles			
9. Roofing Insulation			
10. Waterproofing			
11. Wood shingles /shakes			
12. Roofing Slate			

COLUMBIA COUNTY BUILDING DEPARTMENT
Received for FILE COPY
Code Compliance
PLANS EXAMINER

Category/Subcategory (cont.)	Manufacturer	Product Description	Approval Number(s)
13. Liquid Applied Roof Sys			
14. Cements-Adhesives – Coatings			
15. Roof Tile Adhesive			
16. Spray Applied Polyurethane Roof			
17. Other			
E. SHUTTERS			
1. Accordion			
2. Bahama			
3. Storm Panels			
4. Colonial			
5. Roll-up			
6. Equipment			
7. Others			
F. SKYLIGHTS			
1. Skylight			
2. Other			
G. STRUCTURAL COMPONENTS			
1. Wood connector/anchor			
2. Truss plates			
3. Engineered lumber			
4. Railing			
5. Coolers-freezers			
6. Concrete Admixtures			
7. Material			
8. Insulation Forms			
9. Plastics			
10. Deck-Roof			
11. Wall			
12. Sheds			
13. Other			
H. NEW EXTERIOR ENVELOPE PRODUCTS			
1.			
2.			

The products listed below did not demonstrate product approval at plan review. I understand that at the time of inspection of these products, the following information must be available to the inspector on the jobsite; 1) copy of the product approval, 2) the performance characteristics which the product was tested and certified to comply with, 3) copy of the applicable manufacturers installation requirements.

I understand these products may have to be removed if approval cannot be demonstrated during inspection.

_____

_____

_____

_____

Contractor or Contractor's Authorized Agent Signature

Print Name

Date

Location

FLORIDA DEPARTMENT OF STATE
DIVISION OF CORPORATIONS

Detail by Entity Name

Florida Limited Liability Company

CADY & CADY ENTERPRISES, LLC

Filing Information

Document Number	L11000065307
FEI/EIN Number	NONE
Date Filed	06/03/2011
State	FL
Status	ACTIVE

Principal Address

1015 KINGS AVE
JACKSONVILLE FL 32207 US

Mailing Address

1015 KINGS AVE
JACKSONVILLE FL 32207 US

Registered Agent Name & Address

STUART, PATRICIA
4424 NW AMERICAN LN
STE 101
LAKE CITY FL 32055 US

Manager/Member Detail

Name & Address

Title MGRM

CADY, JOSHUA
1015 KINGS AVE
JACKSONVILLE FL 32207 US

Title MGRM

CADY, MICHAEL
1015 KINGS AVE
JACKSONVILLE FL 32207 US

Annual Reports

No Annual Reports Filed

Document Images

06/03/2011 -- Florida Limited Liability | View image in PDF format

Columbia County
BUILDING DEPARTMENT

MINIMUM PLAN REQUIREMENTS AND CHECKLIST FOR THE FLORIDA BUILDING CODE ,FLORIDA PLUMBING CODE,FLORIDA MECHINICAL CODE,FLORIDA FUEL AND GAS CODE 2007 EFFECTIVE 1 MARCH 2009 & 2009 SUPPLEMENTS EFFECTIVE 1 MARCH 2009 with Supplements and Revision OF THE NATIONAL ELECTRICAL 2008

ALL REQUIREMENTS ARE SUBJECT TO CHANGE

COMMERCIAL MINIMUM PLAN REQUIREMENTS AND CHECKLIST

ALL BUILDING PLANS MUST INDICATE COMPLIANCE WITH THE CURRENT FLORIDA BUILDING CODES. ALL PLANS OR DRAWING SHALL PROVIDED CALCULATIONS AND DETAILS THAT HAVE THE SEAL AND SIGNATURE OF A CERTIFIED ARCHITECT OR ENGINEER REGISTERED IN THE STATE OF FLORIDA, OR ALTERNATE METHODOLOGIES, APPROVED BY THE STATE OF FLORIDA BUILDING COMMISSION.

FOR DESIGN PURPOSES THE FOLLOWING BASIC WIND SPEEDS ARE PER FBC FIGURE 1609 STATE OF FLORIDA WIND-BORNE DEBRIS REGION & BASIC WIND SPEED MAP

WIND SPEED LINE SHALL BE DEFINED AS FOLLOWS: THE CENTERLINE OF INTERSTATE 75
ALL BUILDINGS CONSTRUCTED EAST OF SAID LINE SHALL BE ---------- 100 MPH
ALL BUILDINGS CONSTRUCTED WEST OF SAID LINE SHALL BE ---------- 110 MPH
NO AREA IN COLUMBIA COUNTY IS IN A WIND BORNE DEBRIS REGION

	GENERAL REQUIREMENTS:	Items to Include- Each Box shall be Circled as Applicable		
1	All drawings must be clear, concise and drawn to scale, details that are not used shall be marked void.	YES	NO	N/A
2	If the design professional is an architect or engineer legally registered under the laws of this state regulating the practice of architecture as provided for in Chapter 481, Florida Statutes, Part I, or engineering as provided for in Chapter 471, Florida Statutes, then he or she shall affix his or her official seal to said drawings, specifications and accompanying data, as required by Florida Statute.	YES	NO	N/A
3	The design professional signature shall be affixed to the plans	YES	NO	N/A
4	Two (2) complete sets of plans with the architecture or engineer signature and the date the affix embossed official seal was placed on the plans	YES	NO	N/A

Two (2) complete sets of plans containing the following information:

	Building Site Plan Requirements	Items to Include- Each Box shall be Circled as Applicable		
4	Parking, including provision FBC chapter 11 for the required accessible parking site	Yes	No	N/A
5	Fire access, showing all drive way which will be accessible for emergency vehicles	Yes	No	N/A
6	Driving/turning radius of parking lots	Yes	No	N/A
7	Vehicle loading include truck dock loading or rail site loading	Yes	No	N/A
8	Nearest or number of onsite Fire hydrant/water supply/post indicator valve (PIV)	Yes	No	N/A
9	Set back of all existing or proposed structures from each structure and property boundaries, Show all separation including assumed property lines	Yes	No	N/A
10	Location of specific tanks(above or under grown ,water lines and sewer lines and septic tank and drain fields	Yes	No	N/A
11	All structures exterior views include finished floor elevation	Yes	No	N/A
12	Total height of structure(s) form established grade	Yes	No	N/A
	Review required by the Columbia County Fire Department Items 13Th 43			

	Occupancy group use circle all uses:	Group A	Group B	Group E	Group F	Group H	Group I	Group M	Group R	Group S	Group U D

13	Special occupancy requirements.	Yes	No	N/A
14	Incidental use areas (total square footage for each room of use area)	Yes	No	N/A
15	Mixed occupancies	Yes	No	N/A
16	REQUIRED SEPARATION OF OCCUPANCIES IN HOURS FBC TABLE 302.3.2	Yes	No	N/A

Minimum type of permitted construction by code for occupancy use circle the construction type FBC 602

17	Type I	Type II	Type III	Type IV	Type V

	Fire-resistant construction requirements shall be shown, include the following components			
18	Fire-resistant separations	Yes	No	N/A
19	Fire-resistant protection for type of construction	Yes	No	N/A
20	Protection of openings and penetrations of rated walls	Yes	No	N/A
21	Protection of corridors and penetrations of rated walls	Yes	No	N/A
22	Fire blocking and draftstopping and calculated fire resistance	Yes	No	N/A
	Fire suppression systems shall be shown include:			
23	Early warning smoke evacuation systems Schematic fire sprinklers Standpipes	Yes	No	N/A
24	Standpipes	Yes	No	N/A
25	Pre-engineered systems	Yes	No	N/A
26	Riser diagram	Yes	No	N/A
	Life safety systems shall be shown include the following requirements:			
27	Occupant load and egress capacities	Yes	No	N/A
28	Early warning	Yes	No	N/A
29	Smoke control	Yes	No	N/A
30	Stair pressurization	Yes	No	N/A
31	Systems schematic	Yes	No	N/A
	Occupancy load/egress requirements shall be shown include:			
32	Occupancy load	Yes	No	N/A
33	Gross occupancy load	Yes	No	N/A
34	Net occupancy load	Yes	No	N/A
35	Means of egress	Yes	No	N/A
36	Exit access	Yes	No	N/A
37	Exit discharge	Yes	No	N/A
38	Stairs construction/geometry and protection	Yes	No	N/A
39	Doors	Yes	No	N/A

40	Emergency lighting and exit signs	Yes	No	N/A
41	Specific occupancy requirements	Yes	No	N/A
42	Construction requirements	Yes	No	N/A
43	Horizontal exits/exit passageways	Yes	No	N/A

		Items to Include- Each Box shall be Circled as Applicable		
	Structural requirements shall be shown include:			
44	Soil conditions/analysis	Yes	No	N/A
45	Termite protection	Yes	No	N/A
46	Design loads	Yes	No	N/A
47	Wind requirements	Yes	No	N/A
48	Building envelope	Yes	No	N/A
49	Structural calculations (if required)	Yes	No	N/A
50	Foundation **For** structures with foundation which establish new electrical utility companies service connection a Concrete Encased Electrode will be required within the foundation to serve as an grounding electrode system. Per the National Electrical Code article 250.52.3	Yes	No	N/A
51	Wall systems	Yes	No	N/A
52	Floor systems	Yes	No	N/A
53	Roof systems	Yes	No	N/A
54	Threshold inspection plan	Yes	No	N/A
55	Stair systems	Yes	No	N/A
	Materials shall be shown include the following			
56	Wood	Yes	No	N/A
57	Steel	Yes	No	N/A
58	Aluminum	Yes	No	N/A
59	Concrete	Yes	No	N/A
60	Plastic	Yes	No	N/A
61	Glass	Yes	No	N/A
62	Masonry	Yes	No	N/A
63	Gypsum board and plaster	Yes	No	N/A
64	Insulating (mechanical)	Yes	No	N/A
65	Roofing	Yes	No	N/A
66	Insulation	Yes	No	N/A
	Accessibility requirements shall be shown include the following			
67	Site requirements	Yes	No	N/A
68	Accessible route	Yes	No	N/A
69	Vertical accessibility	Yes	No	N/A
70	Toilet and bathing facilities	Yes	No	N/A
71	Drinking fountains	Yes	No	N/A
72	Equipment	Yes	No	N/A
73	Special occupancy requirements	Yes	No	N/A
74	Fair housing requirements	Yes	No	N/A
	Interior requirements shall include the following			
75	**Review required by the Columbia County Fire Department Items 75Th 80** Interior finishes (flame spread/smoke development)	Yes	No	N/A
76	Light and ventilation	Yes	No	N/A
77	Sanitation	Yes	No	N/A
	Special systems			
78	Elevators	Yes	No	N/A
79	Escalators	Yes	No	N/A
80	Lifts	Yes	No	N/A
	Swimming pools			
81	Barrier requirements	Yes	No	N/A
82	Spas	Yes	No	N/A
83	Wading pools	Yes	No	N/A

	Items to Include-Each Box shall be Circled as Applicable			
	Electrical			
84	Wiring	Yes	No	N/A
85	Services **For** structures with foundation which establish new electrical utility companies service connection a Concrete Encased Electrode will be required within the foundation to serve as an grounding electrode system. Per the National Electrical Code article 250.52.3	Yes	No	N/A
86	Feeders and branch circuits	Yes	No	N/A
87	Overcurrent protection	Yes	No	N/A
88	Grounding	Yes	No	N/A
89	Wiring methods and materials	Yes	No	N/A
90	GFCIs	Yes	No	N/A
91	Equipment	Yes	No	N/A
92	Special occupancies	Yes	No	N/A
93	Emergency systems	Yes	No	N/A
94	Communication systems	Yes	No	N/A
95	Low voltage	Yes	No	N/A
96	Load calculations	Yes	No	N/A
	Plumbing			
97	Minimum plumbing facilities	Yes	No	N/A
98	Fixture requirements	Yes	No	N/A
99	Water supply piping	Yes	No	N/A
100	Sanitary drainage	Yes	No	N/A
101	Water heaters	Yes	No	N/A
102	Vents	Yes	No	N/A
103	Roof drainage	Yes	No	N/A
104	Back flow prevention	Yes	No	N/A
105	Irrigation	Yes	No	N/A
106	Location of water supply line	Yes	No	N/A
107	Grease traps	Yes	No	N/A
108	Environmental requirements	Yes	No	N/A
109	Plumbing riser	Yes	No	N/A
	Mechanical			
110	Energy calculations	Yes	No	N/A
111	**Review required by the Columbia County Fire Department Items 111Th 114** Exhaust systems	Yes	No	N/A
112	Clothes dryer exhaust	Yes	No	N/A
113	Kitchen equipment exhaust	Yes	No	N/A
114	Specialty exhaust systems	Yes	No	N/A
	Equipment location			
115	Make-up air	Yes	No	N/A
116	Roof-mounted equipment	Yes	No	N/A
117	Duct systems	Yes	No	N/A
118	Ventilation	Yes	No	N/A
119	Laboratory	Yes	No	N/A
120	Combustion air	Yes	No	N/A
121	Chimneys, fireplaces and vents	Yes	No	N/A
122	Appliances	Yes	No	N/A
123	Boilers	Yes	No	N/A
124	Refrigeration	Yes	No	N/A
125	Bathroom ventilation	Yes	No	N/A

	Items to Include-Each Box shall be Circled as Applicable			
	Gas			
126	**Review required by the Columbia County Fire Department Items 126Th 134** Gas piping	Yes	No	N/A
127	Venting	Yes	No	N/A
128	Combustion air	Yes	No	N/A
129	Chimneys and vents	Yes	No	N/A
130	Appliances	Yes	No	N/A
131	Type of gas	Yes	No	N/A
132	Fireplaces	Yes	No	N/A
133	LP tank location	Yes	No	N/A
134	Riser diagram/shutoffs	Yes	No	N/A
	Notice of Commencement			
135	A recorded (in the Columbia County Clerk Office) notice of commencement is required to be on file with the building department . *Before Any Inspections Will Be Done*	Yes	No	N/A
	Disclosure Statement for Owner Builders	Yes	No	N/A

	Private Potable Water			
136	Horse power of pump motor	Yes	No	N/A
137	Capacity of pressure tank	Yes	No	N/A
138	Cycle stop valve if used	Yes	No	N/A

THE FOLLOWING ITEMS MUST BE SUBMITTED WITH BUILDING PLANS

139	**Building Permit Application**	A current Building Permit Application form is to be completed and submitted for all construction projects.	Yes	No	N/A
140	**Parcel Number**	The parcel number (Tax ID number) from the Property Appraiser is required. A copy of property deed is also requested. (386) 758-1084	Yes	No	N/A
141	**Environmental Health Permit or Sewer Tap Approval**	A copy of an approved Environmental Health (386) 758-1058 waste water disposal permit or an approved City of Lake City(386) 752-2031 sewer tap is required before a building permit can be issued. **Toilet facilities shall be provided for construction workers**	Yes	No	N/A
142	**Driveway Connection**	If the property does not have an existing access to a public road, then an application for a culvert permit must be made **($25.00)**. Culvert installation for commercial, industrial and other uses shall **conform to the approved site plan or to the specifications of a registered engineer. Use or joint use of driveways will comply with Florida Department of Transportation specifications**. If the project is to be located on an F.D.O.T. maintained road, then an F.D.O.T. access permit is required.	Yes	No	N/A
143	**Suwannee River Water Management District Approval**	All commercial projects must have an SRWMD permit issued or an exemption letter, before a building permit will be issued.	Yes	No	N/A

144	**Flood Management**	All projects within the Floodway of the Suwannee or Santa Fe Rivers shall require permitting through the Suwannee River Water Management District, before submitting application to this office. Any project located within a flood zone where the base flood elevation (100 year flood) **has been** established shall meet the requirements of section 8.8 of the Columbia County Land Development Regulations. Any project that is located within a flood zone where the base flood elevation (100 year flood) **has not been** established shall meet the requirements of section 8.7 of Columbia County Land Development Regulations. A development permit will also be required. **The development permit cost is $50.00**	Yes	No	N/A
145	**Flood Management**	A CERTIFIED FINISHED FLOOR ELEVATIONS WILL BE REQUIRED ON ANY PROJECT WHERE THE BASE FLOOD ELEVATION (100 YEAR FLOOD) HAS BEEN ESTABLISHED.	Yes	No	N/A
146	**911 Address**	If the project is located in an area where a 911 address has not been issued, then application for a 911address must be applied for and **received** through the Columbia County Emergency Management Office of 911 Addressing Department (386) 758-1125	Yes	No	N/A

Pursuant to Chapter one (administration) section R101.2.1 of the Florida Building Code: Section 105.3.2 **Time limitation of application**. An application for a permit for any proposed work shall be deemed to have been abandoned 180 days after the date of filing, unless such application has been pursued in good faith or a permit has been issued; except that the building official is authorized to grant one or more extensions of time for additional periods not exceeding 90 days each. The extension shall be requested in writing and justifiable cause demonstrated.

Pursuant to Chapter one (administration) section R101.2.1 of the Florida Building Code: Section 105.4.1 **Permit intent.** A permit issued shall be constructed to be a license to proceed with the work and not as authority to violate, cancel, alter or set aside any of the provisions of the technical codes, nor shall issuance of a permit prevent the building official from thereafter requiring a correction of errors in plans, construction or violations of this code. Every permit issued shall become invalid unless the work authorized by such permit is commenced within six months after its issuance, or if the work authorized by such permit is suspended or abandoned for a period of six months after the time the work is commenced.

Section 105.4.1.1: If work has commenced and the permit is revoked, becomes null and void, or expires because of lack of progress or abandonment, a new permit covering the proposed construction shall be obtained before proceeding with the work.

Section 105.4.1.2: If a new permit is not obtained within 180 days from the date the initial permit became null and void, the building official is authorized to require that any work which has been commenced or completed be removed from the building site. Alternately, a new permit may be issued on application, providing the work in place and required to complete the structure meets all applicable regulations in effect at the time the initial permit became null and void and any regulations which may have become effective between the date of expiration and the date if issuance of the new permit.

Section 105.4.1.3: Work shall be considered to be in active progress when the permit has received an approved inspection within 180 days. This provision shall not be applicable in case of civil commotion or strike or when the building work is halted due directly to judicial injunction, order or similar process.

Section 105.4.1.4: The fee for renewal reissuance and extension of a permit shall be set forth by the administrative authority.

When the submitted application is approved for permitting the applicant will be notified by phone as to the date and time a building permit will be prepared and issued by the Columbia County Building & Zoning Department.

District No. 1 - Ronald Williams
District No. 2 - Rusty DePratter
District No. 3 - Jody DuPree
District No. 4 - Stephen E. Bailey
District No. 5 - Scarlet P. Frisina

BOARD OF COUNTY COMMISSIONERS • COLUMBIA COUNTY

1 September 2011

Cady & Cady Enterprises, LLC
498 Southwest Ring Court
Lake City, FL 32025

TRANSMITTED VIA FASIMILE
904.880.9333

RE: Building Permit Application 1108-41, Parcel # 19-4S-17-08558-111

Dear Mr. Cady:

The above referenced building permit application can be issued a building permit provided that all the requirements set out in State Statutes and County Ordinances have been met. This includes, but not limited to proof of ownership by the applicant.

If you have any questions concerning this matter, please do not hesitate to contact me at 386.754.7119.

Sincerely,

Brian L. Kepner
Land Development Regulation Administrator,
County Planner

TRANSMISSION VERIFICATION REPORT

TIME : 09/01/2011 15:52
NAME : BUILDING AND ZONING
FAX : 3867582160
SER.# : BROA8F779906

DATE,TIME	09/01 15:51
FAX NO./NAME	919048809333
DURATION	00:00:35
PAGE(S)	01
RESULT	OK
MODE	STANDARD ECM

8:30:18 AM 8/25/2011

Licensee Details

Licensee Information

Name:	**OSSI, LAWRENCE** (Primary Name)
	(DBA Name)
Main Address:	**1934 RETAW STREET** **JACKSONVILLE Florida 32210**
County:	**DUVAL**
License Mailing:	**1934 RETAW STREET** **JACKSONVILLE FL 32210**
County:	**DUVAL**
LicenseLocation:	

License Information

License Type:	**Professional Engineer**
Rank:	**Prof Engineer**
License Number:	**51463**
Status:	**Current,Active**
Licensure Date:	**03/06/1997**
Expires:	**02/28/2013**

Special Qualifications	**Qualification Effective**
Electrical & Computer	**03/06/1997**

View Related License Information

View License Complaint

8:30:58 AM 8/25/2011

Licensee Details

Licensee Information

Name:	**MYLER, ALONZO E** (Primary Name)
	(DBA Name)
Main Address:	**1934 RETAW STREET** **JACKSONVILLE Florida 32210**
County:	**DUVAL**
License Mailing:	
LicenseLocation:	

License Information

License Type:	**Professional Engineer**
Rank:	**Prof Engineer**
License Number:	**55353**
Status:	**Current,Active**
Licensure Date:	**02/11/2000**
Expires:	**02/28/2013**

Special Qualifications	**Qualification Effective**
Building Code Core Course Credit	

View Related License Information

View License Complaint

FLORIDA DEPARTMENT OF HEALTH

Rick Scott
Governor

FAX TRANSMITTAL
ENVIRONMENTAL HEALTH
LAKE CITY, FL

Date: July 6, 2011

To: Luke Carrender

From: Jeremy Gifford

Re: Permit 11-0291N

You will need to give all of this information to your PE. Once everything is drawn up, we will need sealed copies of this paper work and all of the engineered plans. When all of this is received, we can issue the permit based on the engineered design. If there are any other questions, don't hesitate to call Sallie or myself.

Thank You,

Jeremy M. Gifford

Pages: 5

Columbia County Health Department
217 NE Franklin Street Lake City, Florida 32055
Environmental Health
Phone 386-758-1058 Fax 386-758-2187

SUBCONTRACTOR VERIFICATION FORM

APPLICATION NUMBER 1108-41 CONTRACTOR Tenant Contractors, Inc. PHONE 904-268-1008

THIS FORM MUST BE SUBMITTED PRIOR TO THE ISSUANCE OF A PERMIT

In Columbia County one permit will cover all trades doing work at the permitted site. It is REQUIRED that we have records of the subcontractors who actually did the trade specific work under the permit. Per Florida Statute 440 and Ordinance 89-6, a contractor shall require all subcontractors to provide evidence of workers' compensation or exemption, general liability insurance and a valid Certificate of Competency license in Columbia County.

Any changes, the permitted contractor is responsible for the corrected form being submitted to this office prior to the start of that subcontractor beginning any work. Violations will result in stop work orders and/or fines.

ok 1208 ELECTRICAL Munson & Bryan	Print Name John Scolino	Signature	
	License #: EC0001795	Phone #: 904-396-6689	
ok 1209 * MECHANICAL/ A/C ~~Accu-Air~~	Print Name Chuck Leo	Signature Chuck Leo	
	License #: CAC042678	Phone #: 904-278-0900	
ok 1210 * PLUMBING/ GAS Rinkwell	Print Name Rinkwell PLUMBING, INC	Signature	
	License #: CFC-021552	Phone #: 732-5554	
ROOFING N/A	Print Name	Signature	
	License #:	Phone #:	
SHEET METAL N/A	Print Name	Signature	
	License #:	Phone #:	
FIRE SYSTEM/ SPRINKLER N/A	Print Name	Signature	
	License#:	Phone #:	
SOLAR N/A	Print Name	Signature	
	License #:	Phone #:	

Specialty License	License Number	Sub-Contractors Printed Name	Sub-Contractors Signature
MASON	N/A		
CONCRETE FINISHER	CGC1509555	Jacob Sameck (Tenant Contractors)	
FRAMING 1199	CGC1509555	Jacob Sameck	
INSULATION 1199	CGC1509555	Tenant Contractors, Inc.	
STUCCO	N/A	~~Separate~~ Sheet	N/A
DRYWALL 1199	CGC1509555	Tenant Contractors, Inc.	
PLASTER	N/A		
CABINET INSTALLER	CGC1509555	Jacob Sameck (Tenant Contractors)	
PAINTING	CGC1509555	Jacob Sameck (Tenant Contractors)	
ACOUSTICAL CEILING 1199	CGC1509555	Tenant Contractors, Inc.	
ok GLASS 1211 o/c	CGC1711497 58	Contractors Glass James Joyce	
CERAMIC TILE	CGC1509555	Jacob Sameck (Tenant Contractors)	
FLOOR COVERING	N/A		
ALUM/VINYL SIDING	N/A		
GARAGE DOOR	CGC1509555	Jacob Sameck (Tenant Contractors)	
METAL BLDG ERECTOR			

F. S. 440.103 Building permits; Identification of minimum premium policy.—Every employer shall, as a condition to applying for and receiving a building permit, show proof and certify to the permit issuer that it has secured compensation for its employees under this chapter as provided in ss. 440.10 and 440.38, and shall be presented each time the employer applies for a building permit.

Contractor Forms: Subcontractor form: 6/09

SUBCONTRACTOR VERIFICATION FORM

APPLICATION NUMBER 1108-41 CONTRACTOR Tenant - Contractors, Inc. PHONE 904-268-1008

THIS FORM MUST BE SUBMITTED PRIOR TO THE ISSUANCE OF A PERMIT

In Columbia County one permit will cover all trades doing work at the permitted site. It is REQUIRED that we have records of the subcontractors who actually did the trade specific work under the permit. Per Florida Statute 440 and Ordinance 89-6, a contractor shall require all subcontractors to provide evidence of workers' compensation or exemption, general liability insurance and a valid Certificate of Competency license in Columbia County.

Any changes, the permitted contractor is responsible for the corrected form being submitted to this office prior to the start of that subcontractor beginning any work. Violations will result in stop work orders and/or fines.

ELECTRICAL Minnesota Bryan	Print Name John Scolino License #: EC0001795	Signature Phone #: 904-396-6689
MECHANICAL/ A/C ~~Air~~	Print Name Chuck Leo License #: CAC042678	Signature Chuck Leo Phone #: 904-278-0900
PLUMBING/ GAS Rinkwell	Print Name Rinkwell PLUMBING, INC License #: CFC-021552	Signature Phone #: 732-5554
ROOFING N/A	Print Name License #:	Signature Phone #:
SHEET METAL N/A	Print Name License #:	Signature Phone #:
FIRE SYSTEM/ SPRINKLER N/A	Print Name License#:	Signature Phone #:
SOLAR N/A	Print Name License #:	Signature Phone #:

Specialty License	License Number	Sub-Contractors Printed Name	Sub-Contractors Signature
MASON	N/A		
CONCRETE FINISHER	CGC1509555	Jacob Sameck (Tenant Contractors)	
FRAMING 1199	CGC1509555	Jacob Sameck	
INSULATION 1199	CGC1509555	Tenant Contractors, Inc.	
STUCCO	N/A	~~Separate~~ Sheet	N/A
DRYWALL 1199	CGC1509555	Tenant Contractors, Inc.	
PLASTER	N/A		
CABINET INSTALLER	CGC1509555	Jacob Sameck (Tenant Contractors)	
PAINTING	CGC1509555	Jacob Sameck (Tenant Contractors)	
ACOUSTICAL CEILING 1199	CGC1509555	Tenant Contractors, Inc.	
GLASS 1211 o/c	CGC1711497 58	Contractors Glass James Joyce	
CERAMIC TILE	CGC1509555	Jacob Sameck (Tenant Contractors)	
FLOOR COVERING	N/A		
ALUM/VINYL SIDING	N/A		
GARAGE DOOR	CGC1509555	Jacob Sameck (Tenant Contractors)	
METAL BLDG ERECTOR			

ok 1208
ok 1209 *
ok 1210 *
ok *

F. S. 440.103 Building permits; Identification of minimum premium policy.--Every employer shall, as a condition to applying for and receiving a building permit, show proof and certify to the permit issuer that it has secured compensation for its employees under this chapter as provided in ss. 440.10 and 440.38, and shall be presented each time the employer applies for a building permit.

Contractor Forms: Subcontractor form: 6/09

SBC 6/17 11-291N

STATE OF FLORIDA
DEPARTMENT OF HEALTH
ONSITE SEWAGE TREATMENT AND DISPOSAL SYSTEM
APPLICATION FOR CONSTRUCTION PERMIT

PERMIT NO. 1039491
DATE PAID: 6/21/11
FEE PAID: 425.00
RECEIPT #: 1653720

APPLICATION FOR:
[X] New System [ ] Existing System [ ] Holding Tank [ ] Innovative
[ ] Repair [ ] Abandonment [ ] Temporary [ ] _____

APPLICANT: C+H Contracting Professionals, Inc.

AGENT: Lufe Carender TELEPHONE: 386-965-0339

MAILING ADDRESS: P.O. Box 2105, Lake City, FL 32056

TO BE COMPLETED BY APPLICANT OR APPLICANT'S AUTHORIZED AGENT. SYSTEMS MUST BE CONSTRUCTED BY A PERSON LICENSED PURSUANT TO 489.105(3)(m) OR 489.552, FLORIDA STATUTES. IT IS THE APPLICANT'S RESPONSIBILITY TO PROVIDE DOCUMENTATION OF THE DATE THE LOT WAS CREATED OR PLATTED (MM/DD/YY) IF REQUESTING CONSIDERATION OF STATUTORY GRANDFATHER PROVISIONS.

PROPERTY INFORMATION

LOT: 7 BLOCK: _____ SUBDIVISION: Cannon Creek Center PLATTED: _____

PROPERTY ID #: 19-4S-17-08558-111 ZONING: I/M I/M OR EQUIVALENT: [(Y) / N]

PROPERTY SIZE: 5.6 ACRES WATER SUPPLY: [√] PRIVATE PUBLIC [√]<=2000GPD [ ]>2000GPD

IS SEWER AVAILABLE AS PER 381.0065, FS? [Y / (N)] DISTANCE TO SEWER: _____ FT

PROPERTY ADDRESS: 496 SW Ring Court, Lake City, FL 32025

DIRECTIONS TO PROPERTY: 47 S. to Ring Ct, TR to 496

BUILDING INFORMATION [ ] RESIDENTIAL [√] COMMERCIAL

Unit No	Type of Establishment	No. of Bedrooms	Building Area Sqft	Commercial/Institutional System Design Table 1, Chapter 64E-6, FAC
1	office building		13,060	office (25 emp) = 1965 gpd
2	warehouse		5400	WH → 2 docks = 200 gpd
3			18460 ft²	2165 gpd.
4				

[ ] Floor/Equipment Drains [ ] Other (Specify) _____

SIGNATURE: Lufe W. Carender DATE: 6/9/11

DH 4015, 08/09 (Obsoletes previous editions which may not be used)
Incorporated 64E-6.001, FAC

PERMIT #: 12-SC-1356154
APPLICATION #: AP1039491
DATE PAID:
FEE PAID:
RECEIPT #:
DOCUMENT #: PR848943

STATE OF FLORIDA
DEPARTMENT OF HEALTH
ONSITE SEWAGE TREATMENT AND DISPOSAL SYSTEM
CONSTRUCTION PERMIT

CONSTRUCTION PERMIT FOR: OSTDS New

APPLICANT: (C&H CONTRACTING PROFESSIONALS INC)

PROPERTY ADDRESS: 496 SW RING Ct Lake City, FL 32025

LOT: 7 BLOCK: SUBDIVISION: Cannon Creek Center

PROPERTY ID #: 08558-111 [SECTION, TOWNSHIP, RANGE, PARCEL NUMBER] [OR TAX ID NUMBER]

SYSTEM MUST BE CONSTRUCTED IN ACCORDANCE WITH SPECIFICATIONS AND STANDARDS OF SECTION 381.0065, F.S., AND CHAPTER 64E-6, F.A.C. DEPARTMENT APPROVAL OF SYSTEM DOES NOT GUARANTEE SATISFACTORY PERFORMANCE FOR ANY SPECIFIC PERIOD OF TIME. ANY CHANGE IN MATERIAL FACTS, WHICH SERVED AS A BASIS FOR ISSUANCE OF THIS PERMIT, REQUIRE THE APPLICANT TO MODIFY THE PERMIT APPLICATION. SUCH MODIFICATIONS MAY RESULT IN THIS PERMIT BEING MADE NULL AND VOID. ISSUANCE OF THIS PERMIT DOES NOT EXEMPT THE APPLICANT FROM COMPLIANCE WITH OTHER FEDERAL, STATE, OR LOCAL PERMITTING REQUIRED FOR DEVELOPMENT OF THIS PROPERTY.

SYSTEM DESIGN AND SPECIFICATIONS

T [3,200] GALLONS / GPD Septic CAPACITY
A [ ] GALLONS / GPD CAPACITY
N [ ] GALLONS GREASE INTERCEPTOR CAPACITY [MAXIMUM CAPACITY SINGLE TANK:1250 GALLONS]
K [2,700] GALLONS DOSING TANK CAPACITY [360.83]GALLONS @[6]DOSES PER 24 HRS #Pumps [2]

D [2,707] SQUARE FEET Drainfield SYSTEM
R [ ] SQUARE FEET SYSTEM
A TYPE SYSTEM: [x] STANDARD [ ] FILLED [ ] MOUND [ ]
I CONFIGURATION: [x] TRENCH [ ] BED [ ]
N
F LOCATION OF BENCHMARK: Nail with pink ribbon in Palm tree South of system site.
I ELEVATION OF PROPOSED SYSTEM SITE [0.00][INCHES / FT][ABOVE / BELOW]BENCHMARK/REFERENCE POINT
E BOTTOM OF DRAINFIELD TO BE [30.00][INCHES / FT][ABOVE / BELOW]BENCHMARK/REFERENCE POINT
L
D FILL REQUIRED: [0.00] INCHES EXCAVATION REQUIRED: [ ] INCHES

O
T
H
E
R

Each pump serves 1/2 of required absorption area pumps to dose alternately.
Pumps must be certified as suitable for distributing sewage effluent.
PE Design Required.

Excavate any existing drainfield material that is encountered during installation. Properly abandon existing septic tank.

SPECIFICATIONS BY: Jeremy X Gifford TITLE: Environmental Specialist I

APPROVED BY: TITLE: Columbia CHD

DATE ISSUED: 07/06/2011 EXPIRATION DATE:

DH 4016, 08/09 (Obsoletes all previous editions which may not be used)
Incorporated: 64E-6.003, FAC

v 1.1.4 AP1039491 SE847476

STATE OF FLORIDA
DEPARTMENT OF HEALTH
ONSITE SEWAGE TREATMENT AND DISPOSAL SYSTEM
SITE EVALUATION AND SYSTEM SPECIFICATION

APPLICATION # AP1039491
PERMIT # 12-SC-1356154
DOCUMENT # SE847476

APPLICANT: C&H CONTRACTING PROFESSIONALS INC

CONTRACTOR / AGENT:

LOT: 7 BLOCK:

SUBDIVISION: Cannon Creek Center ID#: 08558-111

TO BE COMPLETED BY ENGINEER, HEALTH DEPARTMENT EMPLOYEE, OR OTHER QUALIFIED PERSON. ENGINEERS MUST PROVIDE REGISTRATION NUMBER AND SIGN AND SEAL EACH PAGE OF SUBMITTAL. COMPLETE ALL ITEMS.

PROPERTY SIZE CONFORMS TO SITE PLAN: [X]YES [ ]NO NET USABLE AREA AVAILABLE: 5.60 ACRES

TOTAL ESTIMATED SEWAGE FLOW: 2165 GALLONS PER DAY [RESIDENCES-TABLE1 / OTHER-TABLE 2]

AUTHORIZED SEWAGE FLOW: 8400.00 GALLONS PER DAY [1500 GPD/ACRE OR 2500 GPD/ACRE]

UNOBSTRUCTED AREA AVAILABLE: 5300.00 SQFT UNOBSTRUCTED AREA REQUIRED: 3248.00 SQFT

BENCHMARK/REFERENCE POINT LOCATION: Nail with pink ribbon in Palm tree South of system site.

ELEVATION OF PROPOSED SYSTEM SITE 0.00 [INCHES / FT] [ABOVE / BELOW] BENCHMARK/REFERENCE POINT

THE MINIMUM SETBACK WHICH CAN BE MAINTAINED FROM THE PROPOSED SYSTEM TO THE FOLLOWING FEATURES

SURFACE WATER: 75 FT DITCHES/SWALES: NA FT NORMALLY WET: [ ]YES [X]NO

WELLS: PUBLIC: NA FT LIMITED USE: NA FT PRIVATE: NA FT NON-POTABLE: 100+ FT

BUILDING FOUNDATIONS: 5 FT PROPERTY LINES: FT POTABLE WATER LINES: 10 FT

SITE SUBJECT TO FREQUENT FLOODING? [ ]YES [X]NO 10 YEAR FLOODING? [ ]YES [X]NO

10 YEAR FLOOD ELEVATION FOR SITE: FT [MSL / NGVD] SITE ELEVATION: FT [MSL / NGVD

SOIL PROFILE INFORMATION SITE 1 33" bel.

USDA SOIL SERIES: BlantonLoamy

Munsell #/Color	Texture	Depth
10YR 4/1	Fill - Fine Sand	0 To 14
10YR 5/1	Fine Sand	14 To 48
10YR 5/3	Fine Sand	48 To 54
10YR 7/4	Fine Sand	54 To 62
10YR 6/2	Fine Sand	62 To 72

SOIL PROFILE INFORMATION SITE 2 0" bel.

USDA SOIL SERIES: BlantonLoamy

Munsell #/Color	Texture	Depth
10YR 5/1	Fill - Fine Sand	0 To 12
10YR 5/3	Fine Sand	12 To 48
10YR 7/4	Fine Sand	48 To 60
10YR 6/2	Fine Sand	60 To 72

OBSERVED WATER TABLE: 54.00 INCHES [ABOVE / BELOW] EXISTING GRADE TYPE: [PERCHED / APPARENT]

ESTIMATED WET SEASON WATER TABLE ELEVATION: 54 INCHES [ABOVE / BELOW] EXISTING GRADE

HIGH WATER TABLE VEGETATION: [ ]YES [X]NO MOTTLING: [ ]YES [X]NO DEPTH: INCHES

SOIL TEXTURE/LOADING RATE FOR SYSTEM SIZING: Fine Sand/0.80 DEPTH OF EXCAVATION: INCHES

DRAINFIELD CONFIGURATION: [X] TRENCH [ ] BED [ ] OTHER (SPECIFY)

REMARKS/ADDITIONAL CRITERIA

SHWT determination based on observed depth.

SITE EVALUATED BY: DATE: 07/08/2011

Gifford, Jeremy (Title: Environmental Specialist I)

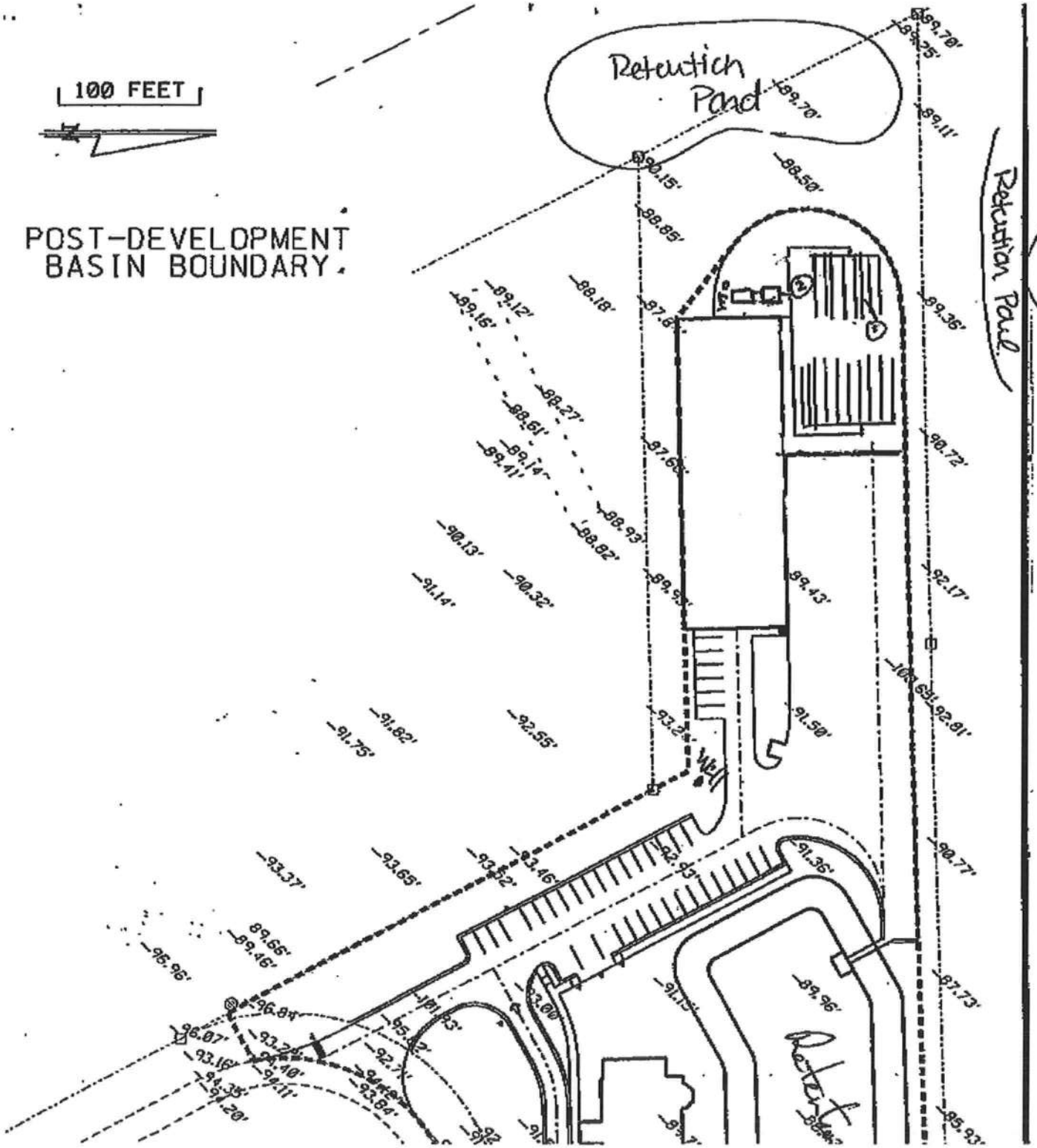

Columbia CHD

BOARD OF COUNTY COMMISSIONERS
OFFICE OF

BUILDING & ZONING

COLUMBIA COUNTY, FLORIDA

BUILDING PERMIT RECEIPT

RECEIPT NUMBER / PERMIT NUMBER 000029724 DATE 10/10/2011

APPLICANT JESSE CULBRETH

OWNER CADY & CADY ENTERPRISES, LLC

CONTRACTOR JACOB SAMECK

PARCEL ID NUMBER 19-4S-17-08558-111 NUMBER OF EXISTING DWELLINGS 1

TYPE OF DEVELOPMENT INTERIOR BUILDOUT

COMMENTS: INTERIOR BUILDOUT-NO ADDITIONAL SQUARE FOOTAGE ADDED

FEES:

BUILDING PERMIT	5000.00	CERTIFICATION FEE	90.00
ZONING FEE		SURCHARGE FEE	90.00
FLOOD ZONE FEE	25.00	FLOOD DEVELOPMENT PERMIT	
MOBILE HOME PERMIT		RELOCATION PERMIT	
TRAVEL TRAILER PERMIT		RECONNECTION PERMIT	
UTILITY POLE PERMIT		WASTE ASSESSMENT FEE	
FIRE FEE (5 ACRES OR LESS)		CULVERT PERMIT	
FIRE FEE (MORE THAN 5 ACRES)		RENEW PERMIT	

CHECK NUMBER

TOTAL FEES CHARGES 5205.00

MAKE CHECKS PAYABLE TO: BCC (Board of County Commissioners)

NOTE: A SEPARATE CHECK IS REQUIRED FOR THE CULVERT WAIVER PERMITS

135 NE HERNANDO AVE.
SUITE B-21
LAKE CITY, FL 32055
Phone: 386-758-1008
Fax: 386-758-2160

COLUMBIA COUNTY FIRE RESCUE
Life Safety Services

P.O. BOX 1529 Lake City, Florida 32056
Office (386) 754-7071 Fax (386) 754-7064

Division Chief
David L. Boozer

07 October 2011

TO: Troy Crews
Columbia County Building Department

FROM: David L. Boozer
Division Chief / Fire Marshal
Florida State Fire Inspector #146595

RE: Application # 1108-41
Cady & Cady Enterprises LLC

A Plan review was performed of the updated Life Safety Plan as requested. At the time of review, the plans met the requirements as set forth in the Florida Fire Prevention Code. I recommend approval.

Should you require any additional information, please feel free to contact my office.

David L. Boozer

Corporate Warranty Deed

Inst:201112013857 Date:9/12/2011 Time:1:20 PM
Doc Stamp-Deed:6125.00
DC,P.DeWitt Cason,Columbia County Page 1 of 2 B:1221 P:312

This Indenture, made , September 2, 2011 A.D.
Between
C & H Contracting Professionals, Inc. whose post office address is: 496 SW Ring Court, Lake City, Florida 32025, a corporation existing under the laws of the State of Florida, Grantor and **Cady & Cady Enterprises, LLC, a Florida Limited Liability Company** whose post office address is: 496 SW Ring Court, Lake City, Florida 32025, Grantee,

Witnesseth, that the said Grantor, for and in consideration of the sum of Ten and No/100 Dollars ($10.00), to it in hand paid by the said Grantee, the receipt whereof is hereby acknowledged, has granted, bargained and sold to the said Grantee forever, the following described land, situate, lying and being in the County of Columbia, State of Florida, to wit:

SEE EXHIBIT A ATTACHED HERETO AND MADE A PART HEREOF.

The above described property does not constitute the homestead property of the Grantor described herein.

Subject to taxes for the current year, covenants, restrictions and easements of record, if any.

Parcel Identification Number: **19-4S-17-08558-111**

And the Grantor hereby covenants with said Grantee that the Grantor is lawfully seized of said land in fee simple; that the Grantor has good right and lawful authority to sell and convey said land; that the Grantor hereby fully warrants the title to said land and will defend the same against the lawful claims of all persons whomsoever; and that said land is free of all encumbrances, except taxes accruing subsequent to December 31, 2010.

And the said Grantor does hereby fully warrant the title to said land, and will defend the same against the lawful claims of all persons whomsoever.

In Witness Whereof, the said Grantor has caused this instrument to be executed in its name by its duly authorized officer and caused its corporate seal to be affixed the day and year first above written.

C & H Contracting Professionals, Inc.

Signed and Sealed in Our Presence:

By: _____
Barry R. Huber
Its: President

Witness Print Name: **Matthew D. Rocco**

Witness Print Name: MELINDA M. WEAVER

(Corporate Seal)

State of Florida
County of Columbia

The foregoing instrument was acknowledged before me this 2nd day of September, 2011, by Barry R. Huber, the President of C & H Contracting Professionals, Inc. A corporation existing under the laws of the State of Florida, on behalf of the corporation.
He/She is personally known to me or has produced / as identification.

_____(Seal)
Notary Public
Notary Printed Name: **Matthew D. Rocco**

My Commission Expires::

Notary Public State of Florida
Matthew Rocco
My Commission EE036995
Expires 10/24/2014

Prepared by & Return to:
Matt Rocco
Sierra Title, LLC
419 SW SR 247, Suite 109
Lake City, Florida 32025
File Number: 11-0204

EXHIBIT A

That part of Lots 6 & 7, Cannon Creek Center, a subdivision according to plat thereof recorded in Plat Book 6, Pages 113 and 114 of the Public Records of Columbia County, Florida, described as follows:

Begin at the Northwest corner of said Lot 7 and run thence S 27 deg. 29'28" E along the Westerly line of said Lot 7, 225.00 feet; thence N 88 deg. 38'58" E, 458.63 feet to the Westerly line of said Lot 6, thence S 28 deg. 11'54" E along said Westerly line of Lot 6, 383.69 feet to the Westerly right-of-way line of Cannon Creek Center Road; thence Northerly and Easterly along said right-of-way line along the curve of a cul-de-sac concave to the right having a radius of 157.00 feet and a central angle of 129 deg. 55'43" an arc distance of 356.03 feet (chord bearing N 36 deg. 45'55" E and chord distance of 284.50 feet); thence N 10 deg. 58'13" E 328.04 feet to the North line of said Lot 6; thence S 88 deg. 38'58" W along the North line of said Lots 6 and 7, 976.65 feet to the Point of Beginning.

Columbia County Property Appraiser

DB Last Updated: 6/22/2011

2010 Tax Year

Tax Collector | Tax Estimator | Property Card | Parcel List Generator | Interactive GIS Map | Print

Parcel: 19-4S-17-08558-111

<< Next Lower Parcel | Next Higher Parcel >>

Search Result: 1 of 1

Owner & Property Info

Owner's Name	C & H CONTRACTING "DEED forthcoming"		
Mailing Address	PROFFESSIONALS INC P O BOX 2105 LAKE CITY, FL 32056		
Site Address	496 SW RING CT		
Use Desc. (code)	STORAGE/OF (004817)		
Tax District	2 (County)	**Neighborhood**	19417
Land Area	5.600 ACRES	**Market Area**	06
Description	NOTE: This description is not to be used as the Legal Description for this parcel in any legal transaction.		

BEG NW COR OF LOT 7, RUN SE 225 FT, E 458.63 FT TO W LINE OF LOT 6, SE 383.69 FT TO W R/W CANNON CREEK RD, NE ALONG R/W 356.03 FT, NE 328.04 FT, W 976.65 FT TO POB BEING PART OF LOT 6 & 7 CANNON CREEK CENTER. ORB 811-1320 CORR DEED 864-850,

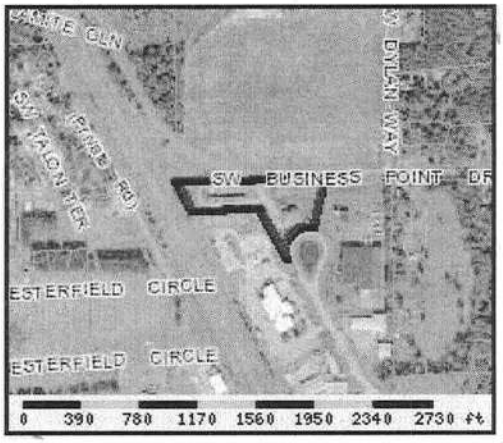

Property & Assessment Values

2010 Certified Values		
Mkt Land Value	cnt: (0)	$378,000.00
Ag Land Value	cnt: (1)	$0.00
Building Value	cnt: (2)	$700,387.00
XFOB Value	cnt: (3)	$71,224.00
Total Appraised Value		$1,149,611.00
Just Value		$1,149,611.00
Class Value		$0.00
Assessed Value		$1,149,611.00
Exempt Value		$0.00
Total Taxable Value		Cnty: $1,149,611 Other: $1,149,611 | Schl: $1,149,611

2011 Working Values

NOTE:
2011 Working Values are NOT certified values and therefore are subject to change before being finalized for ad valorem assessment purposes.

Show Working Values

Sales History

Show Similar Sales within 1/2 mile

Sale Date	OR Book/Page	OR Code	Vacant / Improved	Qualified Sale	Sale RCode	Sale Price
9/19/1995	811/1320	WD	V	Q		$135,500.00

Building Characteristics

Bldg Item	Bldg Desc	Year Blt	Ext. Walls	Heated S.F.	Actual S.F.	Bldg Value
1	OFFICE LOW (004900)	1999	CB STUCCO (17)	7821	9105	$300,940.00
2	PREF M B A (008700)	1999	MOD METAL (25)	18264	18750	$278,981.00
	Note: All S.F. calculations are based on exterior building dimensions.					

Extra Features & Out Buildings

Code	Desc	Year Blt	Value	Units	Dims	Condition (% Good)
0260	PAVEMENT-A	1999	$44,834.00	0055350.000	0 x 0 x 0	AP (010.00)
0166	CONC,PAVMT	1999	$2,390.00	0001770.000	0 x 0 x 0	AP (010.00)
0100	ELEV.PASS	1999	$24,000.00	0000001.000	0 x 0 x 0	AP (020.00)

8.24.11 for Jesse ALL UPDATED ☑ SAMECK, JACOB ☑ INC ☑ energy calculation

Columbia County Building Permit Application ☑ Provided estimate: Sons of Windall

For Office Use Only Application # 1108-41 Date Received 8/22 By JW Permit # 29724

Zoning Official BLK Date SEPT. 11 Flood Zone X Land Use I Zoning ILW

FEMA Map # N/A Elevation N/A MFE N/A River N/A Plans Examiner T.C. Date 10-7-11

Comments Interior buildout NO additional Existing Sq. ft.

☐ NOC ☑ EH ☑ Deed or PA N/A Site Plan ☐ State Road Info ☑ Well letter ☑ 911 Sheet ☐ Parent Parcel #

☐ Dev Permit # ☐ In Floodway ☐ Letter of Auth. from Contractor ☐ F W Comp. letter

IMPACT FEES: EMS Fire Corr ☑ Sub VF Form

Road/Code School = TOTAL (Suspended) ☑ App Fee Paid

Septic Permit No. 11-291-N Fax 904-268-1008

Name Authorized Person Signing Permit Jesse Culbreth Phone 904-477-9506

Address 5120 Sunbeam Road Jacksonville, FL 32257

Owners Name Cady + Cady Enterprises LLC Phone 904-880-7455 ex.644 965.0335 cell

911 Address 498 SW Ring Court, Lake City, FL 32025

Contractors Name Tenant Contractors, Inc. JACOB Sameck Phone 904-268-1008

Address 5120 Sunbeam Rd. Jacksonville, FL 32257

Fee Simple Owner Name & Address ——

Bonding Co. Name & Address ——

Architect/Engineer Name & Address William Myers Design - P.O. Box 1513 Lake City, FL 32056

Mortgage Lenders Name & Address Bank of America Merrill Lynch

Circle the correct power company – FL Power & Light – Clay Elec. – Suwannee Valley Elec. – Progress Energy

Property ID Number 19-4S-17-08558-111 Estimated Cost of Construction $1,000,000.00

Subdivision Name Cannon Creek Center Lot 6 Block ____ Unit ____ Phase ____

Driving Directions I-75 to St. Hwy 242 (Head N.E) to SW Ring CT. Property is at end of Road.

Number of Existing Dwellings on Property 2

Construction of Interior buildout Total Acreage 5.6 Lot Size ____

Do you need a - Culvert Permit or Culvert Waiver or Have an Existing Drive Total Building Height 24'

Actual Distance of Structure from Property Lines - Front Interior only Side ____ Side ____ Rear ____

Number of Stories 1 Heated Floor Area 18,000 Sq.FT Total Floor Area 18,000 Sq.FT. Roof Pitch 1/4

spoke to Luke 10/7/11

Application is hereby made to obtain a permit to do work and installations as indicated. I certify that no work or installation has commenced prior to the issuance of a permit and that all work be performed to meet the standards of all laws regulating construction in this jurisdiction. CODE: Florida Building Code 2007 with 2009 Supplements and 2008 National Electrical Code.

called - given an update: 8.25.11 info: left. owner/lic - rent in document

$5205.00 permit fee

Columbia County Building Permit Application

TIME LIMITATIONS OF APPLICATION : An application for a permit for any proposed work shall be deemed to have been abandoned 180 days after the date of filing, unless such application has been pursued in good faith or a permit has been issued; except that the building official is authorized to grant one or more extensions of time for additional periods not exceeding 90 days each. The extension shall be requested in writing and justifiable cause demonstrated.

TIME LIMITATIONS OF PERMITS: Every permit issued shall become invalid unless the work authorized by such permit is commenced within 180 days after its issuance, or if the work authorized by such permit is suspended or abandoned for a period of 180 days after the time work is commenced. A valid permit receives an approved inspection every 180 days. Work shall be considered not suspended, abandoned or invalid when the permit has received an approved inspection within 180 days of the previous approved inspection.

FLORIDA'S CONSTRUCTION LIEN LAW: Protect Yourself and Your Investment: According to Florida Law, those who work on your property or provide materials, and are not paid-in-full, have a right to enforce their claim for payment against your property. This claim is known as a construction lien. If your contractor fails to pay subcontractors or material suppliers or neglects to make other legally required payments, the people who are owed money may look to your property for payment, even if you have paid your contractor in full.
This means if a lien is filed against your property, it could be sold against your will to pay for labor, materials or other services which your contractor may have failed to pay.

NOTICE OF RESPONSIBILITY TO BUILDING PERMITEE: ***YOU ARE HEREBY NOTIFIED*** as the recipient of a building permit from Columbia County, Florida, you will be held responsible to the County for any damage to sidewalks and/or road curbs and gutters, concrete features and structures, together with damage to drainage facilities, removal of sod, major changes to lot grades that result in ponding of water, or other damage to roadway and other public infrastructure facilities caused by you or your contractor, subcontractors, agents or representatives in the construction and/or improvement of the building and lot for which this permit is issued. No certificate of occupancy will be issued until all corrective work to these public infrastructures and facilities has been corrected.

WARNING TO OWNER: YOUR FAILURE TO RECORD A NOTICE OF COMMENCMENT MAY RESULT IN YOU PAYING TWICE FOR IMPROVEMENTS TO YOUR PROPERTY. A NOTICE OF COMMENCEMENT MUST BE RECORDED AND POSTED ON THE JOB SITE BEFORE THE FIRST INSPECTION. IF YOU INTEND TO OBTAIN FINANCING, CONSULT WITH YOUR LENDER OR ATTORNEY BEFORE RECORDING YOUR NOTICE OF COMMENCEMENT.

OWNERS CERTIFICATION: I CERTIFY THAT ALL THE FOREGOING INFORMATION IS ACCURATE AND THAT ALL WORK WILL BE DONE IN COMPLIANCE WITH ALL APPLICABLE LAWS REGULATING CONSTRUCTION AND ZONING.

NOTICE TO OWNER: There are some properties that may have deed restrictions recorded upon them. These restrictions may limit or prohibit the work applied for in your building permit. You must verify if your property is encumbered by any restrictions or face possible litigation and or fines.

(Owners Must Sign All Applications Before Permit Issuance.)

Owners Signature ****OWNER BUILDERS MUST PERSONALLY APPEAR AND SIGN THE BUILDING PERMIT.**

CONTRACTORS AFFIDAVIT: By my signature I understand and agree that I have informed and provided this written statement to the owner of all the above written responsibilities in Columbia County for obtaining this Building Permit including all application and permit time limitations.

Contractor's Signature (Permitee)

Contractor's License Number CGC1509555
Columbia County
Competency Card Number_____

Affirmed under penalty of perjury to by the Contractor and subscribed before me this 15th **day of** August **20**11.

Personally known ___ **or Produced Identification**_____

SEAL:

Notary Public State of Florida
Anson Simque
My Commission DD983018
Expires 04/18/2014

State of Florida Notary Signature (For the Contractor)