Columbia County Building Permit Application

For Office Use Only Application # 0712-60 Date Received 12/19 By JW Permit # 26592

Zoning Official BLK Date 27.12.07 Flood Zone X FEMA Map # N/A Zoning

Land Use A-3 Elevation N/A MFE 1' above Rd River N/A Plans Examiner OK JTH Date 12-26-07

Comments Section 14.9 Special Family Lot Permit

☐ NOC ☑ EH ☐ Deed or PA ☑ Site Plan ☐ State Road Info ☐ Parent Parcel #

☐ Dev Permit # ☐ In Floodway ☐ Letter of Authorization from Contractor

☐ Unincorporated area ☐ Incorporated area ☐ Town of Fort White ☐ Town of Fort White Compliance letter

Septic Permit No. 07-0971 Fax

Name Authorized Person Signing Permit Theresa Barbale Phone 239-776-5489

Address 334 SW Cozy Gln, Lake City, FL 32024

Owners Name James + Theresa Barbale Phone 239-776-5489

911 Address 334 SW Cozy Gln, Lake City, FL 32024

Contractors Name James Barbale Phone 239-776-5489

Address 334 SW Cozy Gln, Lake City, FL 32024

Fee Simple Owner Name & Address

Bonding Co. Name & Address

Architect/Engineer Name & Address William Myer, Design; Nicholas Paul Geisler 1758 NW Brown Rd.

Mortgage Lenders Name & Address First Federal Savings Bank of Florida 4705 W US Hwy 90, Lake City, FL

Circle the correct power company – FL Power & Light – Clay Elec. – Suwannee Valley Elec. – Progress Energy

Property ID Number 26-3S-15-00242-007 Estimated Cost of Construction $150,000

Subdivision Name Lot Block Unit Phase

Driving Directions take Hwy 90 west to Kooneville Rd. make a left. Go down ½ m. make first right Cozy Gln (dirt road) follow to fork, and enter gate 2 acres at the end of easement on the L Number of Existing Dwellings on Property Ø

Construction of SFD - FRAMED Total Acreage 2 Lot Size

Do you need a - Culvert Permit or Culvert Waiver or Have an Existing Drive (PRIVATE) Total Building Height 20'4"

Actual Distance of Structure from Property Lines - Front 70 Side 80 Side 56 Rear 46

Number of Stories 1 Heated Floor Area 3073 Total Floor Area 4756 Roof Pitch 12/6, 12/10, 12/3

Application is hereby made to obtain a permit to do work and installations as indicated. I certify that no work or installation has commenced prior to the issuance of a permit and that all work be performed to meet the standards of all laws regulating construction in this jurisdiction.

 CK#107

Tu called 12.27.2007 spoke w/ Theresa

COLUMBIA COUNTY BUILDING DEPARTMENT
135 NE Hernando Ave.. Suite B-21
Lake City, FL 32055
Office: 386-758-1008 Fax: 386-758-2160

NOTARIZED DISCLOSURE STATEMENT
FOR OWNER/BUILDER WHEN ACTING AS THER OWN CONTRACTOR AND CLAIMING EXEMPTION OF CONTRACTOR LICENSING REQUIREMENTS IN ACCORDANCE WITH FLORIDA STATUTES, ss. 489.103(7).

State law requires construction to be done by licensed contractors. You have applied for a permit under an exemption to that law. The exemption allows you, as the owner of your property, to act as your own contractor with certain restrictions even though you do not have a license. You must provide direct, onsite supervision of the construction yourself. You may build or improve a one-family or two-family residence or a farm outbuilding. You may also build or improve a commercial building, provided your costs do not exceed $75,000. The building or residence must be for your own use or occupancy. It may not be built or substantially improved for sale or lease. If you sell or lease a building you have built or substantially improved for yourself within 1 year after the construction is complete, the law will presume that you built or substantially improved it for sale or lease, which is a violation of this exemption. You may not hire an unlicensed person to act as your contractor or to supervise people working on your building. It is your responsibility to make sure that people employed by you have licenses required by state law and by county or municipal licensing ordinances. You may not delegate the responsibility for supervising work to a licensed contractor who is not licensed to perform the work being done. Any person working on your building who is not licensed must work under your direct supervision and must be employed by you, which means that you must deduct F .I.C.A. and withholding tax and provide workers' compensation for that employee, all as prescribed by law. Your construction must comply with all applicable laws, ordinances, building codes, and zoning regulations.
I understand that if I am not physically doing the work or physically supervising free labor from friends or relatives, that I must hire licensed contractors, i.e. electrician, plumber, mechanical (heating & air conditioning), etc. I further understand that the violation of not physically doing the work, and the use of unlicensed contractors at the construction site, will cause the project to be shut down by the inspection staff of the Columbia County Building Department. Additionally, state statutes allows for additional penalties. I also understand that if this violation does occur, that in order for the job to proceed, I will have a licensed contractor come in and obtain a new permit as taking the job over. I understand that if I hire subcontractors under a contract price, that they must be licensed to work in Columbia County, i.e. masonry, drywall, carpentry. Contractors licensed by the Columbia County Contractor Licensing Section or the State of Florida are required to have worker's compensation and liability coverage.

TYPE OF CONSTRUCTION

(X) Single Family Dwelling ( ) Two-Family Residence ( ) Farm Outbuilding
( ) Other_____ ( ) Addition, Alteration, Modification or other Improvement

I James Barbale, have been advised of the above disclosure statement for exemption from contractor licensing as an owner/builder. I agree to comply with all requirements provided for in Florida Statutes ss.489.103(7) allowing this exception for the construction permitted by Columbia County Building
Permit Number _____

James Barbale 12/18/2007
Owner Builder Signature Date

FLORIDA NOTARY
The above signer is personally known to me or produced identification Well Known
Notary Signature _____ Date 12/18/07

CRISTA THOMAS
Notary Public, State of Florida
My comm. expires Feb. 14, 2010
No. DD 493925

FOR BUILDING DEPARTMENT USE ONLY
I hereby certify that the above listed owner/builder has been notified of the disclosure statement in Florida Statutes ss 489.103(7). Date_____ Building Official/Representative_____

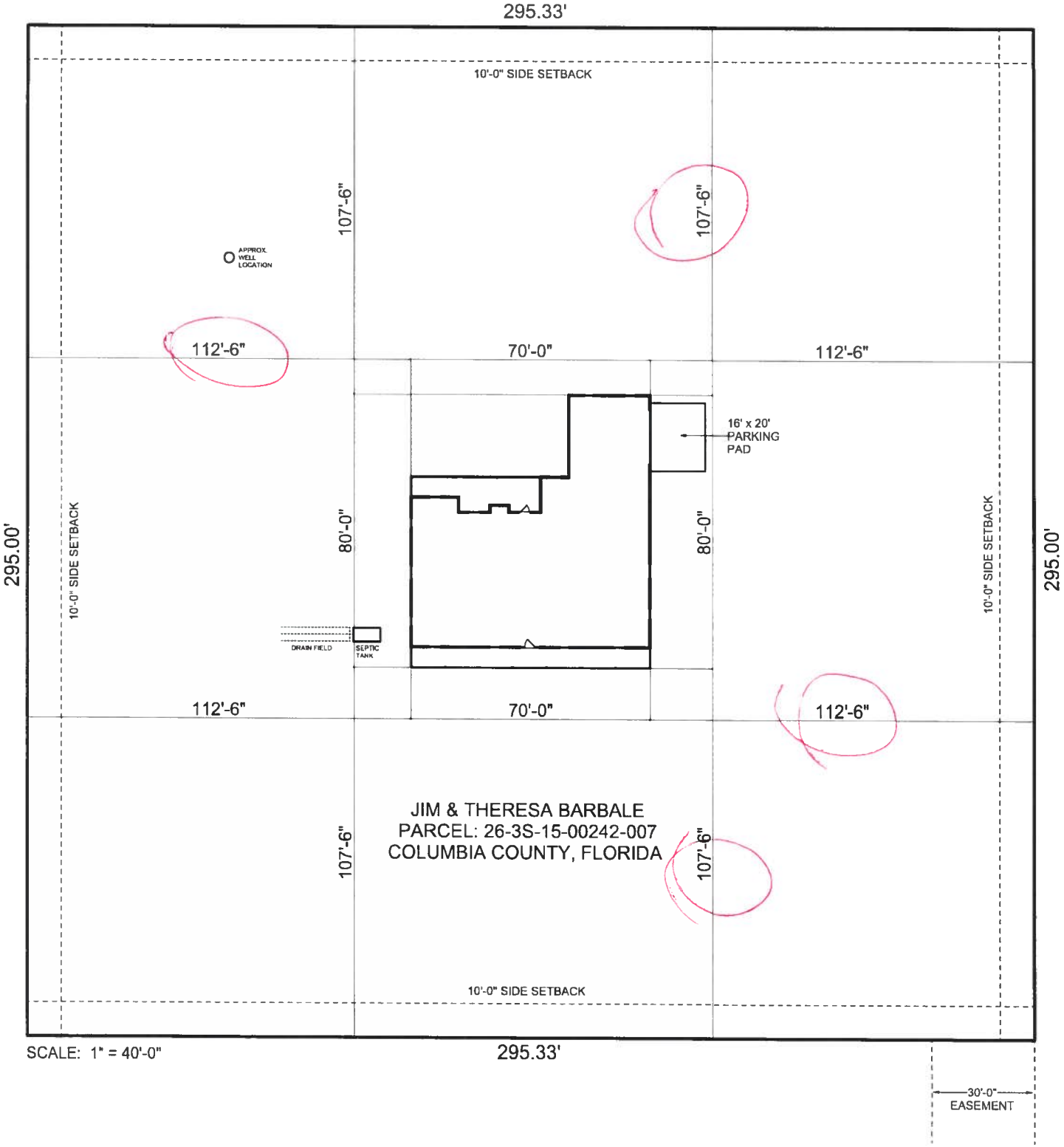
295.33'
10'-0" SIDE SETBACK
107'-6"
107'-6"
APPROX. WELL LOCATION
112'-6"
70'-0"
112'-6"
16' x 20' PARKING PAD
295.00'
10'-0" SIDE SETBACK
80'-0"
80'-0"
10'-0" SIDE SETBACK
295.00'
DRAIN FIELD
SEPTIC TANK
112'-6"
70'-0"
112'-6"
JIM & THERESA BARBALE
PARCEL: 26-3S-15-00242-007
COLUMBIA COUNTY, FLORIDA
107'-6"
107'-6"
10'-0" SIDE SETBACK
SCALE: 1" = 40'-0"
295.33'
30'-0"
EASEMENT

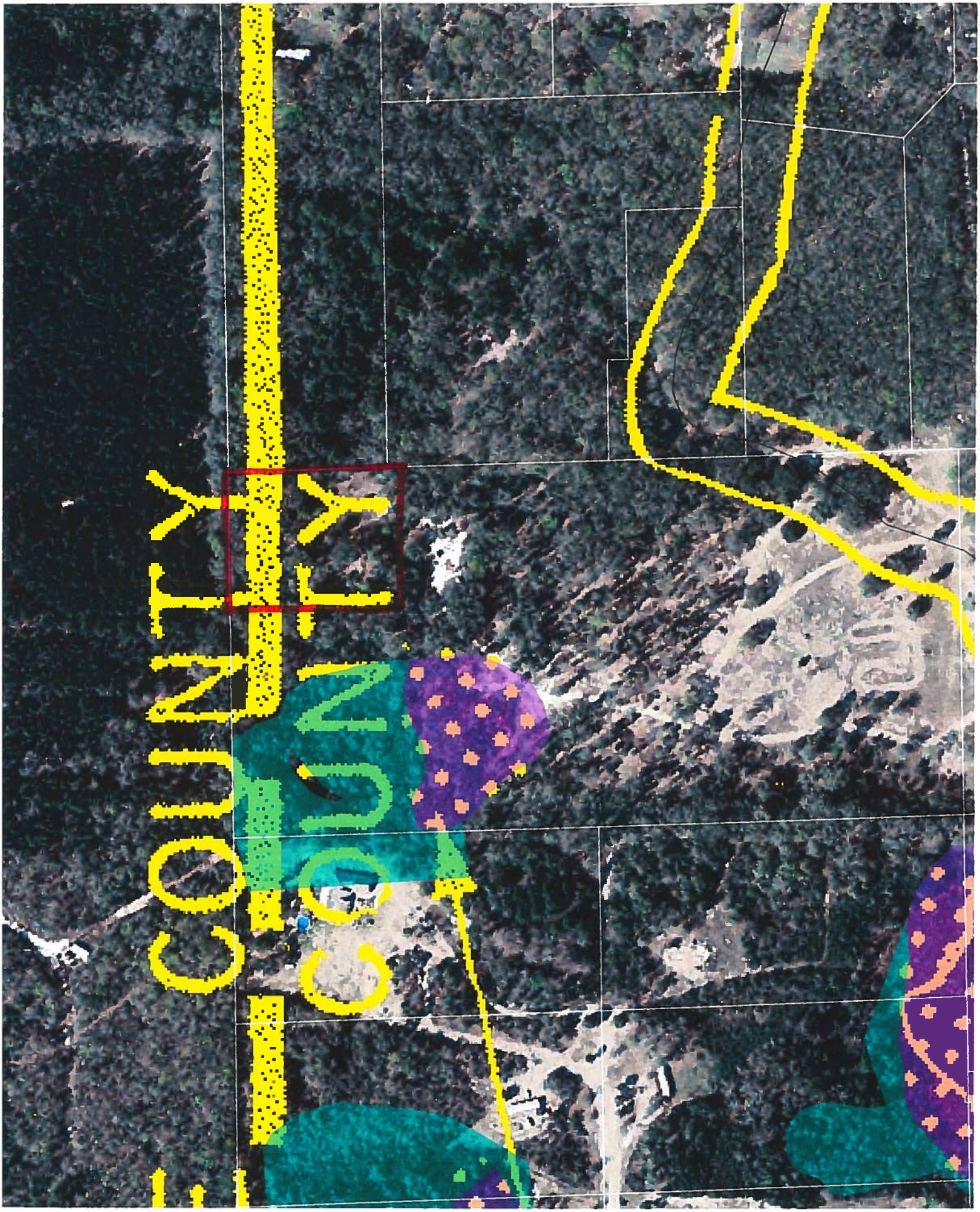

0712-60

COLUMBIA COUNTY 9-1-1 ADDRESSING

P. O. Box 1787, Lake City, FL 32056-1787
PHONE: (386) 758-1125 * FAX: (386) 758-1365 * Email: ron_croft@columbiacountyfla.com

Addressing Maintenance

To maintain the Countywide Addressing Policy you must make application for a 9-1-1 Address at the time you apply for a building permit. The established standards for assigning and posting numbers to all principal buildings, dwellings, businesses and industries are contained in Columbia County Ordinance 2001-9. The addressing system is to enable Emergency Service Agencies to locate you in an emergency, and to assist the United States Postal Service and the public in the timely and efficient provision of services to residents and businesses of Columbia County.

DATE REQUESTED: 7/20/2007 **DATE ISSUED:** 7/23/2007

ENHANCED 9-1-1 ADDRESS:

334 SW COZY GLN

LAKE CITY FL 32024

PROPERTY APPRAISER PARCEL NUMBER:

26-3S-15-00242-001

Remarks:

PARENT PARCEL

Address Issued By: _____
Columbia County 9-1-1 Addressing / GIS Department

NOTICE: THIS ADDRESS WAS ISSUED BASED ON LOCATION INFORMATION RECEIVED FROM THE REQUESTER. SHOULD, AT A LATER DATE, THE LOCATION INFORMATION BE FOUND TO BE IN ERROR, THIS ADDRESS IS SUBJECT TO CHANGE.

861

Approved Address

JUL 23 2007

911Addressing/GIS Dept

Aff. No. 0712-60

AFFIDAVIT OF SUBDIVIDED REAL PROPERTY FOR USE OF IMMEDIATE FAMILY MEMBERS FOR PRIMARY RESIDENCE

STATE OF FLORIDA
COUNTY OF COLUMBIA

BEFORE ME the undersigned Notary Public personally appeared.

Jerri Haines, the Owner of the parent tract which has been subdivided for immediate family primary residence use, hereinafter the Owner, and James & Theresa Barbale, the family member of the Owner, who is the owner of the family parcel which is intended for immediate family primary residence use, hereafter the Family Member, and is related to the Owner as daughter and son-in-law, and both individuals being first duly sworn according to law, depose and say:

1. Both the Owner and the Family Member have personal knowledge of all matters set forth in this Affidavit.

2. The Owner holds fee simple title to certain real property situated in Columbia County, and more particularly described by reference to the Columbia county Property Appraiser Tax Parcel No. 26-3S-15-00242-007 1.

3. The Owner has divided his parent parcel for use of immediate family members for their primary residence and the parcel divided and the remaining parent parcel are at least ½ acre in size. Immediate family is defined as grandparent, parent, step-parent, adopted parent, sibling, child, step-child, adopted child or grandchild.

4. The Family Member is a member of the Owner's immediate family, as set forth above, and holds fee simple title to certain real property divided from the Owner's parcel situated in Columbia County and more particularly described by reference to the Columbia County Property Appraiser Tax Parcel No. 26-3S-15-00242-007.

5. No person or entity other than the Owner and Family Member claims or is presently entitled to the right of possession or is in possession of the property, and there are no tenancies, leases or other occupancies that affect the Property.

6. This Affidavit is made for the specific purpose of inducing Columbia County to recognize a family division for a family member on the parcel divided in accordance with Section 14.9 of the Columbia County Land Development Regulations.

7. This Affidavit is made and given by Affiants with full knowledge that the facts contained herein are accurate and complete, and with full knowledge that the penalties under Florida law for perjury include conviction of a felony of the third degree.

We Hereby Certify that the information contained in this Affidavit are true and correct.

Jerri Haines
Owner

Theresa Barbale
Family Member

Jerri Haines
Typed or Printed Name

Theresa Barbale
Typed or Printed Name

Subscribed and sworn to (or affirmed) before me this 26 day of December, 2007, by Jerri Haines (Owner) who is personally known to me or has produced Florida Drivers License as identification.

Nicole Colette Storer
Notary Public

NICOLE COLETTE STORER
MY COMMISSION # DD 496892
EXPIRES: December 6, 2009
Bonded Thru Notary Public Underwriters

Subscribed and sworn to (or affirmed) before me this 26 day of December, 2007, by Theresa Barbale (Family Member) who is personally known to me or has produced Florida Drivers License as identification.

Nicole Colette Storer
Notary Public

NICOLE COLETTE STORER
MY COMMISSION # DD 496892
EXPIRES: December 6, 2009
Bonded Thru Notary Public Underwriters

FORM 600A-2004R EnergyGauge® 4.5.2

FLORIDA ENERGY EFFICIENCY CODE FOR BUILDING CONSTRUCTION

Florida Department of Community Affairs

Residential Whole Building Performance Method A

Project Name:	**Jim & Theresa Barbale**	Builder:	
Address:	**SW Cozy Glen**	Permitting Office:	Columbia
City, State:	**Lake City, FL 32025-**	Permit Number:	26552
Owner:	**Barbale Residence**	Jurisdiction Number:	221000
Climate Zone:	**North**		

1. New construction or existing	New	
2. Single family or multi-family	Single family	
3. Number of units, if multi-family	1	
4. Number of Bedrooms	4	
5. Is this a worst case?	No	
6. Conditioned floor area (ft²)	3073 ft²	
7. Glass type[1] and area: (Label reqd. by 13-104.4.5 if not default)		
a. U-factor: (or Single or Double DEFAULT)	Description Area 7a. (Dble Default) 197.3 ft²	
b. SHGC: (or Clear or Tint DEFAULT)	7b. (Clear) 197.3 ft²	
8. Floor types		
a. Slab-On-Grade Edge Insulation	R=5.0, 252.0(p) ft	
b. N/A		
c. N/A		
9. Wall types		
a. Frame, Wood, Exterior	R=13.0, 1834.7 ft²	
b. Frame, Wood, Adjacent	R=13.0, 196.0 ft²	
c. N/A		
d. N/A		
e. N/A		
10. Ceiling types		
a. Under Attic	R=30.0, 3150.0 ft²	
b. N/A		
c. N/A		
11. Ducts		
a. Sup: Unc. Ret: Unc. AH: Garage	Sup. R=6.0, 50.0 ft	
b. Sup: Unc. Ret: Unc. AH: Garage	Sup. R=6.0, 50.0 ft	

12. Cooling systems		
a. Central Unit	Cap: 26.0 kBtu/hr	
	SEER: 13.00	
b. Central Unit	Cap: 26.0 kBtu/hr	
	SEER: 13.00	
c. N/A		
13. Heating systems		
a. Electric Heat Pump	Cap: 26.0 kBtu/hr	
	HSPF: 7.70	
b. Electric Heat Pump	Cap: 26.0 kBtu/hr	
	HSPF: 7.70	
c. N/A		
14. Hot water systems		
a. Electric Resistance	Cap: 80.0 gallons	
	EF: 0.90	
b. N/A		
c. Conservation credits (HR-Heat recovery, Solar DHP-Dedicated heat pump)		
15. HVAC credits (CF-Ceiling fan, CV-Cross ventilation, HF-Whole house fan, PT-Programmable Thermostat, MZ-C-Multizone cooling, MZ-H-Multizone heating)	PT,	

Glass/Floor Area: 0.06

Total as-built points: 31242
Total base points: 38214

PASS

I hereby certify that the plans and specifications covered by this calculation are in compliance with the Florida Energy Code.

PREPARED BY: _____

DATE: 12·13·07

I hereby certify that this building, as designed, is in compliance with the Florida Energy Code.

OWNER/AGENT: _____

DATE: _____

Review of the plans and specifications covered by this calculation indicates compliance with the Florida Energy Code. Before construction is completed this building will be inspected for compliance with Section 553.908 Florida Statutes.

GREAT SEAL OF THE STATE OF FLORIDA · IN GOD WE TRUST

BUILDING OFFICIAL: _____

DATE: _____

1 Predominant glass type. For actual glass type and areas, see Summer & Winter Glass output on pages 2&4.

SUMMER CALCULATIONS

Residential Whole Building Performance Method A - Details

ADDRESS: **SW Cozy Glen, Lake City, FL, 32025-** PERMIT #:

BASE

GLASS TYPES .18 X Conditioned Floor Area	X BSPM	= Points
.18 3073.0	18.59	10283.0

AS-BUILT

Type/SC	Overhang Ornt	Len	Hgt	Area X	SPM X	SOF =	Points
1.Double, Clear	W	7.5	9.0	15.0	38.52	0.57	330.0
2.Double, Clear	W	11.8	9.0	15.0	38.52	0.47	271.0
3.Double, Clear	W	11.8	9.0	20.0	38.52	0.47	362.0
4.Double, Clear	W	1.5	9.0	9.0	38.52	0.97	336.0
5.Double, Clear	N	1.5	9.0	16.0	19.20	0.98	299.0
6.Double, Clear	N	1.5	9.0	15.0	19.20	0.98	280.0
7.Double, Clear	E	7.5	9.0	60.0	42.06	0.56	1414.0
8.Double, Clear	E	7.5	9.0	13.3	42.06	0.56	314.0
9.Double, Clear	S	1.5	9.0	30.0	35.87	0.94	1015.0
10.Double, Clear	S	1.5	9.0	4.0	35.87	0.94	135.0
As-Built Total:				**197.3**			**4756.0**

WALL TYPES	Area X	BSPM =	Points
Adjacent	196.0	0.70	137.2
Exterior	1834.7	1.70	3119.0
Base Total:	**2030.7**		**3256.2**

Type	R-Value	Area X	SPM =	Points
1. Frame, Wood, Exterior	13.0	1834.7	1.50	2752.0
2. Frame, Wood, Adjacent	13.0	196.0	0.60	117.6
As-Built Total:		**2030.7**		**2869.6**

DOOR TYPES	Area X	BSPM =	Points
Adjacent	20.0	2.40	48.0
Exterior	20.0	6.10	122.0
Base Total:	**40.0**		**170.0**

Type	Area X	SPM =	Points
1.Exterior Insulated	20.0	4.10	82.0
2.Adjacent Insulated	20.0	1.60	32.0
As-Built Total:	**40.0**		**114.0**

CEILING TYPES	Area X	BSPM =	Points
Under Attic	3073.0	1.73	5316.3
Base Total:	**3073.0**		**5316.3**

Type	R-Value	Area X	SPM X SCM =	Points
1. Under Attic	30.0	3150.0	1.73 X 1.00	5449.5
As-Built Total:		**3150.0**		**5449.5**

FLOOR TYPES	Area X	BSPM =	Points
Slab	252.0(p)	-37.0	-9324.0
Raised	0.0	0.00	0.0
Base Total:			**-9324.0**

Type	R-Value	Area X	SPM =	Points
1. Slab-On-Grade Edge Insulation	5.0	252.0(p	-36.20	-9122.4
As-Built Total:		**252.0**		**-9122.4**

INFILTRATION	Area X	BSPM =	Points
	3073.0	10.21	31375.3

	Area X	SPM =	Points
	3073.0	10.21	31375.3

SUMMER CALCULATIONS

Residential Whole Building Performance Method A - Details

ADDRESS: **SW Cozy Glen, Lake City, FL, 32025-** PERMIT #:

BASE				AS-BUILT						
Summer Base Points: 41076.8				**Summer As-Built Points:**						**35442.1**
Total Summer Points	X System Multiplier	=	Cooling Points	Total Component (System - Points)	X Cap Ratio	X Duct Multiplier (DM x DSM x AHU)	X System Multiplier	X Credit Multiplier	=	Cooling Points
				(sys 1: Central Unit 26000btuh ,SEER/EFF(13.0) Ducts:Unc(S),Unc(R),Gar(AH),R6.0(INS)						
				35442	0.50	(1.09 x 1.147 x 1.00)	0.260	0.950		5472.4
				(sys 2: Central Unit 26000btuh ,SEER/EFF(13.0) Ducts:Unc(S),Unc(R),Gar(AH),R6.0(INS)						
				35442	0.50	(1.09 x 1.147 x 1.00)	0.260	0.950		5472.4
41076.8	**0.3250**		**13350.0**	**35442.1**	**1.00**	**1.250**	**0.260**	**0.950**		**10944.8**

WINTER CALCULATIONS

Residential Whole Building Performance Method A - Details

ADDRESS: **SW Cozy Glen, Lake City, FL, 32025-** PERMIT #:

BASE

GLASS TYPES

.18 X	Conditioned Floor Area	X BWPM	= Points
.18	3073.0	20.17	11157.0

WALL TYPES	Area	X BWPM	= Points
Adjacent	196.0	3.60	705.6
Exterior	1834.7	3.70	6788.4
Base Total:	**2030.7**		**7494.0**

DOOR TYPES	Area	X BWPM	= Points
Adjacent	20.0	11.50	230.0
Exterior	20.0	12.30	246.0
Base Total:	**40.0**		**476.0**

CEILING TYPES	Area	X BWPM	= Points
Under Attic	3073.0	2.05	6299.6
Base Total:	**3073.0**		**6299.6**

FLOOR TYPES	Area	X BWPM	= Points
Slab	252.0(p)	8.9	2242.8
Raised	0.0	0.00	0.0
Base Total:			**2242.8**

INFILTRATION	Area	X BWPM	= Points
	3073.0	-0.59	-1813.1

AS-BUILT

Type/SC	Overhang Ornt	Len	Hgt	Area	X WPM	X WOF	= Points
1.Double, Clear	W	7.5	9.0	15.0	20.73	1.15	357.0
2.Double, Clear	W	11.8	9.0	15.0	20.73	1.19	371.0
3.Double, Clear	W	11.8	9.0	20.0	20.73	1.19	495.0
4.Double, Clear	W	1.5	9.0	9.0	20.73	1.01	188.0
5.Double, Clear	N	1.5	9.0	16.0	24.58	1.00	393.0
6.Double, Clear	N	1.5	9.0	15.0	24.58	1.00	368.0
7.Double, Clear	E	7.5	9.0	60.0	18.79	1.24	1397.0
8.Double, Clear	E	7.5	9.0	13.3	18.79	1.24	310.0
9.Double, Clear	S	1.5	9.0	30.0	13.30	1.02	408.0
10.Double, Clear	S	1.5	9.0	4.0	13.30	1.02	54.0
As-Built Total:				**197.3**			**4341.0**

Type	R-Value	Area	X WPM	= Points
1. Frame, Wood, Exterior	13.0	1834.7	3.40	6238.0
2. Frame, Wood, Adjacent	13.0	196.0	3.30	646.8
As-Built Total:		**2030.7**		**6884.8**

Type	Area	X WPM	= Points
1.Exterior Insulated	20.0	8.40	168.0
2.Adjacent Insulated	20.0	8.00	160.0
As-Built Total:	**40.0**		**328.0**

Type	R-Value	Area	X WPM	X WCM	= Points
1. Under Attic	30.0	3150.0	2.05	X 1.00	6457.5
As-Built Total:		**3150.0**			**6457.5**

Type	R-Value	Area	X WPM	= Points
1. Slab-On-Grade Edge Insulation	5.0	252.0(p	7.60	1915.2
As-Built Total:		**252.0**		**1915.2**

Area	X WPM	= Points
3073.0	-0.59	-1813.1

WINTER CALCULATIONS

Residential Whole Building Performance Method A - Details

ADDRESS: **SW Cozy Glen, Lake City, FL, 32025-** PERMIT #:

BASE			AS-BUILT						
Winter Base Points:		**25856.4**	**Winter As-Built Points:**						**18113.4**
Total Winter Points	X System Multiplier	= Heating Points	Total Component (System - Points)	X Cap Ratio	X Duct Multiplier (DM x DSM x AHU)	X System Multiplier	X Credit Multiplier	= Heating Points	
			(sys 1: Electric Heat Pump 26000 btuh ,EFF(7.7) Ducts:Unc(S),Unc(R),Gar(AH),R6.0						
			18113.4	0.500	(1.069 x 1.169 x 1.00)	0.443	0.950	4761.6	
			(sys 2: Electric Heat Pump 26000 btuh ,EFF(7.7) Ducts:Unc(S),Unc(R),Gar(AH),R6.0						
			18113.4	0.500	(1.069 x 1.169 x 1.00)	0.443	0.950	4761.6	
25856.4	**0.5540**	**14324.4**	**18113.4**	**1.00**	**1.250**	**0.443**	**0.950**	**9523.1**	

WATER HEATING & CODE COMPLIANCE STATUS

Residential Whole Building Performance Method A - Details

ADDRESS: **SW Cozy Glen, Lake City, FL, 32025-** PERMIT #:

BASE				AS-BUILT							
WATER HEATING											
Number of Bedrooms	X	Multiplier	= Total	Tank Volume	EF	Number of Bedrooms	X	Tank Ratio	X Multiplier	X Credit Multiplier	= Total
4		2635.00	10540.0	80.0	0.90	4		1.00	2693.56	1.00	10774.2
				As-Built Total:							**10774.2**

CODE COMPLIANCE STATUS

BASE				AS-BUILT			
Cooling Points +	Heating Points +	Hot Water Points =	Total Points	Cooling Points +	Heating Points +	Hot Water Points =	Total Points
13350	**14324**	**10540**	**38214**	**10945**	**9523**	**10774**	**31242**

PASS

Code Compliance Checklist

Residential Whole Building Performance Method A - Details

ADDRESS: **SW Cozy Glen, Lake City, FL, 32025-** PERMIT #:

6A-21 INFILTRATION REDUCTION COMPLIANCE CHECKLIST

COMPONENTS	SECTION	REQUIREMENTS FOR EACH PRACTICE	CHECK
Exterior Windows & Doors	606.1.ABC.1.1	Maximum:.3 cfm/sq.ft. window area; .5 cfm/sq.ft. door area.	
Exterior & Adjacent Walls	606.1.ABC.1.2.1	Caulk, gasket, weatherstrip or seal between: windows/doors & frames, surrounding wall; foundation & wall sole or sill plate; joints between exterior wall panels at corners; utility penetrations; between wall panels & top/bottom plates; between walls and floor. EXCEPTION: Frame walls where a continuous infiltration barrier is installed that extends from, and is sealed to, the foundation to the top plate.	
Floors	606.1.ABC.1.2.2	Penetrations/openings >1/8" sealed unless backed by truss or joint members. EXCEPTION: Frame floors where a continuous infiltration barrier is installed that is sealed to the perimeter, penetrations and seams.	
Ceilings	606.1.ABC.1.2.3	Between walls & ceilings; penetrations of ceiling plane of top floor; around shafts, chases, soffits, chimneys, cabinets sealed to continuous air barrier; gaps in gyp board & top plate; attic access. EXCEPTION: Frame ceilings where a continuous infiltration barrier is installed that is sealed at the perimeter, at penetrations and seams.	
Recessed Lighting Fixtures	606.1.ABC.1.2.4	Type IC rated with no penetrations, sealed; or Type IC or non-IC rated, installed inside a sealed box with 1/2" clearance & 3" from insulation; or Type IC rated with < 2.0 cfm from conditioned space, tested.	
Multi-story Houses	606.1.ABC.1.2.5	Air barrier on perimeter of floor cavity between floors.	
Additional Infiltration reqts	606.1.ABC.1.3	Exhaust fans vented to outdoors, dampers; combustion space heaters comply with NFPA, have combustion air.	

6A-22 OTHER PRESCRIPTIVE MEASURES (must be met or exceeded by all residences.)

COMPONENTS	SECTION	REQUIREMENTS	CHECK
Water Heaters	612.1	Comply with efficiency requirements in Table 612.1.ABC.3.2. Switch or clearly marked cir breaker (electric) or cutoff (gas) must be provided. External or built-in heat trap required.	
Swimming Pools & Spas	612.1	Spas & heated pools must have covers (except solar heated). Non-commercial pools must have a pump timer. Gas spa & pool heaters must have a minimum thermal efficiency of 78%.	
Shower heads	612.1	Water flow must be restricted to no more than 2.5 gallons per minute at 80 PSIG.	
Air Distribution Systems	610.1	All ducts, fittings, mechanical equipment and plenum chambers shall be mechanically attached, sealed, insulated, and installed in accordance with the criteria of Section 610. Ducts in unconditioned attics: R-6 min. insulation.	
HVAC Controls	607.1	Separate readily accessible manual or automatic thermostat for each system.	
Insulation	604.1, 602.1	Ceilings-Min. R-19. Common walls-Frame R-11 or CBS R-3 both sides. Common ceiling & floors R-11.	

ENERGY PERFORMANCE LEVEL (EPL) DISPLAY CARD

ESTIMATED ENERGY PERFORMANCE SCORE* = 87.8

The higher the score, the more efficient the home.

Barbale Residence, SW Cozy Glen, Lake City, FL, 32025-

1.	New construction or existing	New	
2.	Single family or multi-family	Single family	
3.	Number of units, if multi-family	1	
4.	Number of Bedrooms	4	
5.	Is this a worst case?	No	
6.	Conditioned floor area (ft²)	3073 ft²	
7.	Glass type[1] and area: (Label reqd. by 13-104.4.5 if not default)		
a.	U-factor: (or Single or Double DEFAULT)	Description Area 7a. (Dble Default) 197.3 ft²	
b.	SHGC: (or Clear or Tint DEFAULT)	7b. (Clear) 197.3 ft²	
8.	Floor types		
a.	Slab-On-Grade Edge Insulation	R=5.0, 252.0(p) ft	
b.	N/A		
c.	N/A		
9.	Wall types		
a.	Frame, Wood, Exterior	R=13.0, 1834.7 ft²	
b.	Frame, Wood, Adjacent	R=13.0, 196.0 ft²	
c.	N/A		
d.	N/A		
e.	N/A		
10.	Ceiling types		
a.	Under Attic	R=30.0, 3150.0 ft²	
b.	N/A		
c.	N/A		
11.	Ducts		
a.	Sup: Unc. Ret: Unc. AH: Garage	Sup. R=6.0, 50.0 ft	
b.	Sup: Unc. Ret: Unc. AH: Garage	Sup. R=6.0, 50.0 ft	
12.	Cooling systems		
a.	Central Unit	Cap: 26.0 kBtu/hr SEER: 13.00	
b.	Central Unit	Cap: 26.0 kBtu/hr SEER: 13.00	
c.	N/A		
13.	Heating systems		
a.	Electric Heat Pump	Cap: 26.0 kBtu/hr HSPF: 7.70	
b.	Electric Heat Pump	Cap: 26.0 kBtu/hr HSPF: 7.70	
c.	N/A		
14.	Hot water systems		
a.	Electric Resistance	Cap: 80.0 gallons EF: 0.90	
b.	N/A		
c.	Conservation credits (HR-Heat recovery, Solar DHP-Dedicated heat pump)		
15.	HVAC credits (CF-Ceiling fan, CV-Cross ventilation, HF-Whole house fan, PT-Programmable Thermostat, MZ-C-Multizone cooling, MZ-H-Multizone heating)	PT,	

I certify that this home has complied with the Florida Energy Efficiency Code For Building Construction through the above energy saving features which will be installed (or exceeded) in this home before final inspection. Otherwise, a new EPL Display Card will be completed based on installed Code compliant features.

Builder Signature: _____ Date: _____

Address of New Home: _____ City/FL Zip: _____

**NOTE: The home's estimated energy performance score is only available through the FLA/RES computer program. This is not a Building Energy Rating. If your score is 80 or greater (or 86 for a US EPA/DOE EnergyStar™ designation), your home may qualify for energy efficiency mortgage (EEM) incentives if you obtain a Florida Energy Gauge Rating. Contact the Energy Gauge Hotline at 321/638-1492 or see the Energy Gauge web site at www.fsec.ucf.edu for information and a list of certified Raters. For information about Florida's Energy Efficiency Code For Building Construction, contact the Department of Community Affairs at 850/487-1824.*

1 Predominant glass type. For actual glass type and areas, see Summer & Winter Glass output on pages 2&4.

EnergyGauge® (Version: FLRCPB v4.5.2)

PRODUCT APPROVAL SPECIFICATION SHEET

Location: 334 SW Cozy Glen Lake City, FL **Project Name:** Barbale House

As required by Florida Statute 553.842 and Florida Administrative Code 9B-72, please provide the information and the product approval number(s) on the building components listed below if they will be utilized on the construction project for which you are **applying for a building permit on or after April 1, 2004**. We recommend you contact your local product supplier should you not know the product approval number for any of the applicable listed products. More information about statewide product approval can be obtained at

Category/Subcategory	Manufacturer	Product Description	Approval Number(s)
A. EXTERIOR DOORS			
1. Swinging	RB	Exterior doors w/ sidelights /wo	FL8562
2. Sliding	—		
3. Sectional	—		
4. Roll up	—		
5. Automatic	Gadco	16' Garage door - Model 7825	FL4612
6. Other	R.B.	French door Single	FL8560
B. WINDOWS			
1. Single hung	Pella	Vinyl standard	FL 2645-R1
2. Horizontal Slider	Pella	vinyl tempered	FL 3134-R1
3. Casement	—		
4. Double Hung	Pella	Vinyl standard	FL 8638-R0
5. Fixed	Glass block Warehouse	Fixed Plexi-glass block window	FL4018-R1
6. Awning	MW	Awning window	FL 1863-R1
7. Pass -through	—		
8. Projected	—		
9. Mullion	—		
10. Wind Breaker	—		
11 Dual Action	—		
12. Other	—		
C. PANEL WALL			
1. Siding	Georgia Pacific	Vinyl siding Vision Pro Clapboard	FL 2224-R1
2. Soffits	Owens-Corning	"Standard" vented vinyl	FL 4617-R3
3. EIFS	—		
4. Storefronts	—		
5. Curtain walls	—		
6. Wall louver	—		
7. Glass block	—		
8. Membrane	—		
9. Greenhouse	—		
10. Other	—		
D. ROOFING PRODUCTS			
1. Asphalt Shingles	Owens-Corning	Asphalt/Fiberglass Oakridge Pro	FL 3663-R4
2. Underlayments	Atlas Roofing	felt Paper	FL 4064-R1
3. Roofing Fasteners	Olympic	fastners	FL 699-R1
4. Non-structural Metal Rf	—		
5. Built-Up Roofing	—		
6. Modified Bitumen			
7. Single Ply Roofing Sys	—		
8. Roofing Tiles	—		
9. Roofing Insulation	—		
10. Waterproofing	Owens-Corning	Weatherlock G	FL9777
11. Wood shingles /shakes	—		
12. Roofing Slate	—		

Driving Directions to 334 SW Cozy GLN

From Lake City
Take HWY 90 west
To Koonville Rd. (252A) make left
First right will be Cozy GLN (Marked by a blue sign)
334 SW Cozy GLN is at the very end on the left.
Go inside gate very long driveway

HALL'S PUMP & WELL SERVICE, INC.

SPECIALIZING IN 4"-6" WELLS

DONALD AND MARY HALL
OWNERS

PHONE (386) 752-1854
FAX (386) 755-7022
904 NW MAIN BLVD.
LAKE CITY, FLORIDA 32055

January 23,2007

Notice To All Contractors:

Please be advised that due to the new building codes we will use a large capacity diaphragm tank on all new wells. This will insure a minimum of one (1) minute draw down or one (1) minute refill. If a smaller diaphragm tank is used then we will install a cycle stop valve which will produce the same results. All wells will have a pump & tank combination that will be sufficient enough for each situation.

If you have any questions please feel free to call our office.

Thank You ,

Donald D. Hall

1687

CLERK CIRCUIT COURT COLUMBIA COUNTY, FLORIDA

STATE OF FLORIDA, COUNTY OF COLUMBIA
I HEREBY CERTIFY, that the above and foregoing is a true copy of the original filed in this office
P. DeWITT CASON, CLERK OF COURTS
By Bonnie Lou
Deputy Clerk
Date 12-11-07

This Instrument Prepared By:
Michael H. Harrell
Abstract & Title Services, Inc.
283 NW Cole Terrace
Lake City, Florida 32055

NOTICE OF COMMENCEMENT

TO WHOM IT MAY CONCERN:

The undersigned hereby give notice that improvements will be made to certain real property and in accordance with Chapter 713, Florida Statues, the following is provided in this Notice of Commencement:

1. Description of Property: See Exhibit "A" attached hereto and by this reference made a part thereof

2. General Description of Improvement: Construction of Dwelling

3. Owner Information:

   a. Name and Address: James Barbale, and his wife, Theresa Barbale, 264 SW Cozy Lane, Lake City, FL 32024

   b. Interest in property: Fee Simple

   c. Name and address of fee simple title holder (if other than Owner): NONE

4. Contractor (name and address): James C. Barbale, 264 SW Cozy7 Glen, Lake City, FL 32024

5. Surety:

   a. Name and Address: N/A

   b. Amount of Bond: N/A

Inst 200712027220 Date 12/11/2007 Time 1 29 PM
DC,P DeWitt Cason,Columbia County Page 1 of 2

6. LENDER: First Federal Savings Bank of Florida
   4705 West US Highway 90
   PO Box 2029
   Lake City, FL 32056

7. Persons within the State of Florida designated by Owner upon whom notices of other documents may be served as provided in Section 713.13(1)(a)7., Florida Statutes: NONE

8. In addition to himself, Owner designates PAULA HACKER, of FIRST FEDERAL SAVINGS BANK OF FLORIDA at 4705 WEST US HIGHWAY 90 / PO BOX 2029, LAKE CITY, FL 32056, to receive a copy of the Lienor's Notice as provided in Section 713.13(1)(b) Florida Statutes.

8. Expiration date of Notice of Commencement (the expiration date is 1 year from the date of recording unless a different date is specified).

***Owner is used for singular or plural as context requires.**

Signed, sealed and delivered in the presence:

Cheryl Beaty
WITNESS Cheryl Beaty

Traci Landry
WITNESS Traci Landry

James Barbale
James Barbale

Theresa Barbale
Theresa Barbale

STATE OF FLORIDA
COUNTY OF COLUMBIA

Before me, personally appeared James Barbale, and his wife, Theresa Barbale, to me known to be the person(s) described in and who executed the foregoing instrument, and they acknowledged to and before me that they executed said instrument for the purpose therein expressed.

Witness my hand and official seal this 10th day of December, 2007.

(SEAL)

NOTARY PUBLIC

My Commission Expires:

NOTARY PUBLIC STATE OF FLORIDA
DORIS M DRAKE
MY COMMISSION # DD537517
EXPIRES: Apr. 5, 2010
(407) 398-0153 Florida Notary Service.com

ATS #16879

Exhibit "A"

A part of the South ½ of the Southwest ¼ of the Northwest ¼ of Section 26, Township 3 South, Range 15 East, Columbia County, Florida, being more particularly described as follows:

Begin at the Northwest corner of said S ½ of the SW ¼ of the NW ¼ of Section 26, and run North 88°41'04" East, 295.00 feet; thence South 01°01'29" East, 295.33 feet; thence South 88°41'04" West, 295.00 feet to the West line of said Section 26; thence North 01°01'29" West, along said West line, 295.33 feet to the Point of Beginning.

TOGETHER WITH an easement for ingress and egress purposes, said easement lies 30 feet to the following described line: Commence at the Northwest corner of said S ½ of the SW ¼ of the NW ¼ of Section 26, and run North 88°41'04" East, 295.00 feet to the Point of Beginning of said line; thence continue North 88°41'04" East, 1019.94 feet to the Point of Termination of said line.

TOGETHER WITH a perpetual non-exclusive easement for ingress and egress over and across the North 30 feet of that part of N ½ of S ½ of SE ¼ of NW ¼, Section 26, Township 2 South, Range 15 East, Columbia County, Florida.

JB

Legal description: A part of the South ½ of the SW ¼ of the NW ¼ of section 26, township 3 South, Range 15 East, Columbia County, Florida being more particularly described as follows:
Begin at the NW corner of said south ½ of the SW ¼ of the NW ¼ of Section 26, and run N.88"41'04'E., 295.00 Feet; Thence S.01+01'29'E., 295.33 Feet, Thence S.88+a1'04'W., 295.00 Feet to the West line of said section 26; thence N.01+01'29'W., Along said west line, 295.33 feet to the point of beginning containing 2.00 acres, more of less.
Easement 1: Together with an Easement for ingress & egress purposes, said easement lies 30 feet to the following described line: Commence at the NW corner of said south ½ of the SW ¼ of the NW ¼ of section 26, and run N.88"41'04'E., 295.00 Feet to the point of beginning of said line; thence continue N.88"41'04E., 1019.94 Feet to the point of termination of said line.
Easement 2: a perpetual non-exclusive easement for ingress and egress over and across the north 30 feet of that part of the north1/2 of south ½ of SE ¼ of NW 1/4 , section 26, township 2 south, range 15 east, Columbia County, Florida.

Above Space Reserved for Recording
[If required by your jurisdiction, list above the name & address of: 1) where to return this form; 2) preparer; 3) party requesting recording.]

Quitclaim Deed

Inst:200712021431 Date:9/20/2007 Time:11:57 AM
Doc Stamp-Deed:0.00
DC,P.DeWitt Cason,Columbia County Page 1 of 2

Date of this Document: 8-18-07

Reference Number of Any Related Documents: 26-3S-15-00242-001

Grantor:

Name Robert Haines, Jerra Haines, Yvonne Haines
Street Address 264 SW Cozy GLN
City/State/Zip Lake City, FL 32024

Grantee:

Name James Barbale, Theresa Barbale
Street Address 334 SW Cozy GLN
City/State/Zip Lake City, FL 32024

Abbreviated Legal Description (i.e., lot, block, plat *or* section, township, range, quarter/quarter *or* unit, building and condo name): See above

Assessor's Property Tax Parcel/Account Number(s): 26-3S-15-00242-001

THIS QUITCLAIM DEED, executed this 18 day of August, 20 07, by first party, Grantor, Robert Haines, Jerra Haines, Yvonne Haines, whose mailing address is 264 SW Cozy GLN, Lake City, FL 32024, to second party, Grantee, James Barbale, Theresa Barbale, whose mailing address is 334 SW Cozy GLN, Lake City, FL 32024.

WITNESSETH that the said first party, for good consideration and for the sum of zero Dollars ($ 0.00) paid by the said second party, the receipt whereof is hereby acknowledged, does hereby remise, release and quitclaim unto the said second party forever, all the right, title, interest and claim,

© 2005 Socrates Media, LLC
LF293-1 • Rev. 05/05

which the said first party has in and to the following described parcel of land, and improvements and appurtenances thereto in the County of Columbia, State of Florida to wit:

IN WITNESS WHEREOF, the said first party has signed and sealed these presents the day and year first written above. Signed, sealed and delivered in the presence of:

Signature of Witness James Barbale
Print Name of Witness James Barbale

Signature of Witness Theresa M. Barbale
Print Name of Witness Theresa M Barbale

Signature of Grantor Robert Haines, Jerri Haines, Yvonne Haines
Print Name of Grantor Robert Haines, Jerri Haines, Yvonne Haines

State of FLORIDA)
County of PUTNAM)

On 8-18-07, before me, SAUNDRA W BRETT, appeared YVONNE HAINES, JERRI HAINES & ROBERT HAINES personally known to me (or proved to me on the basis of satisfactory evidence) to be the person(s) whose name(s) is/are subscribed to the within instrument and acknowledged to me that he/she/they executed the same in his/her/their authorized capacity(ies), and that by his/her/their signature(s) on the instrument the person(s), or the entity upon behalf of which the person(s) acted, executed the instrument.

WITNESS my hand and official seal.

Saundra W Brett
Signature of Notary

Affiant ____ Known ✓ Produced ID
Type of ID DRIVERS LICENSE
(Seal)

NOTARY PUBLIC-STATE OF FLORIDA
Saundra W. Brett
Commission #DD662890
Expires: MAY 01, 2011
BONDED THRU ATLANTIC BONDING CO., INC.

© 2005 Socrates Media, LLC
LF29B-1 • Rev 05/05

STATE OF FLORIDA
DEPARTMENT OF HEALTH

APPLICATION FOR ONSITE SEWAGE DISPOSAL SYSTEM CONSTRUCTION PERMIT

Permit Application Number 07-0973

PART II - SITE PLAN

Scale: Each block represents 5 feet and 1 inch = 50 feet.

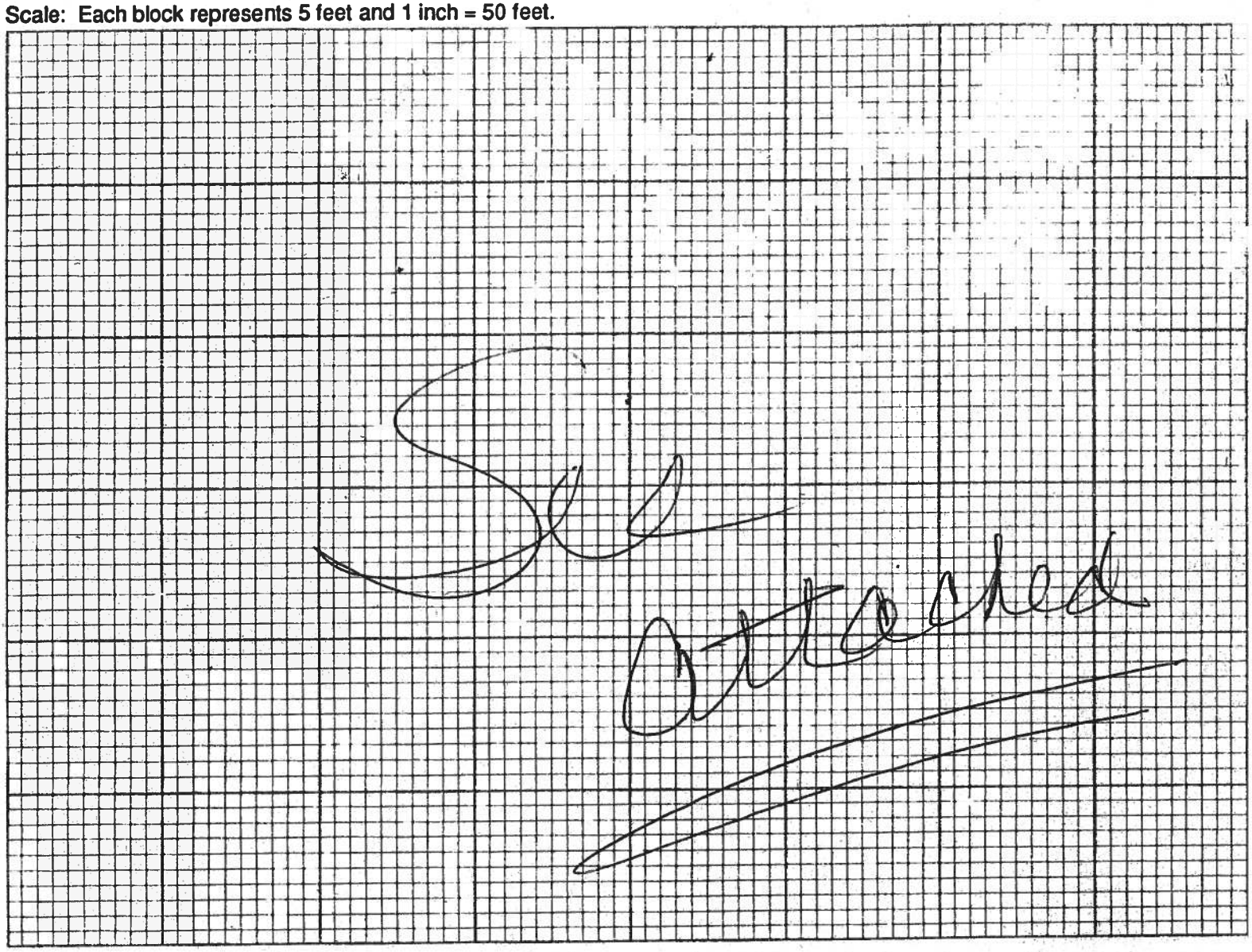

Notes:

Site Plan submitted by: Theresa Rasbrala (Signature) owner (Title)

Plan Approved X APPROVED Not Approved ____ Date 12/21/07

By Theresa Rasbrala Columbia CHD County Health Department

ALL CHANGES MUST BE APPROVED BY THE COUNTY HEALTH DEPARTMENT

B-2 #07-1260

07-0923

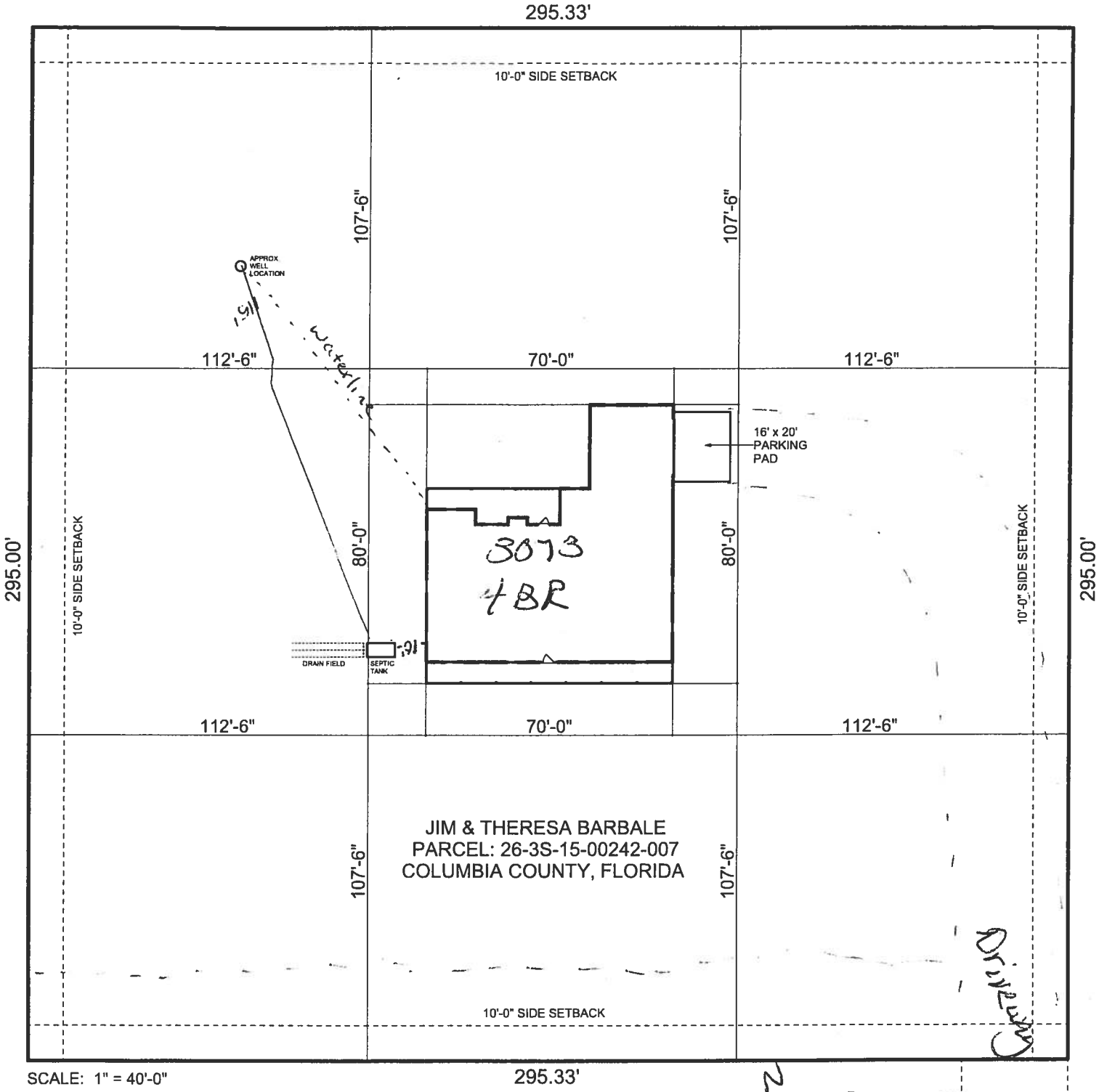

SCALE: 1" = 40'-0"

REVISED 12/21/7

Theresa Barbale 12-14-07

APPROVED
12/21/7

Columbia CHD

ITW Building Components Group, Inc.

1950 Marley Drive Haines City, FL 33844
Florida Engineering Certificate of Authorization Number: 0 278
Florida Certificate of Product Approval # FL1999
 Document ID:1TDD215-Z0217135315

Truss Fabricator: W.B. Howland
Job Identification: 4909-/THERESA BARBALE /OWNER BUILDER -- , **
Truss Count: 27
Model Code: Florida Building Code 2004 and 2006 Supplement
Truss Criteria: ANSI/TPI-2002(STD)/FBC
Engineering Software: Alpine Software,Version 7.38.
Structural Engineer of Record: The identity of the structural EOR did not exist as of
Address: the seal date per section 61G15-31.003(5a) of the FAC
Minimum Design Loads: Roof - 40.0 PSF @ 1.25 Duration
Floor - N/A
Wind - 110 MPH ASCE 7-02 -Closed

Seal Date: 12/17/2007

-Truss Design Engineer-
James F. Collins Jr.
Florida License Number: 52212
1950 Marley Drive
Haines City, FL 33844

Notes:

1. Determination as to the suitability of these truss components for the structure is the responsibility of the building designer/engineer of record, as defined in ANSI/TPI 1
2. The drawing date shown on this index sheet must match the date shown on the individual truss component drawing.
3. As shown on attached drawings; the drawing number is preceded by: HCUSR215

Details: A11015EE-GBLLETIN-CNBRGBLK-

#	Ref Description	Drawing#	Date
1	95993--1	07351042	12/17/07
2	95994--2	07351043	12/17/07
3	95995--3	07351044	12/17/07
4	95996--4	07351045	12/17/07
5	95997--A1	07351024	12/17/07
6	95998--A2	07351025	12/17/07
7	95999--A3	07351026	12/17/07
8	96000--A4	07351027	12/17/07
9	96001--A5	07351028	12/17/07
10	96002--A6	07351029	12/17/07
11	96003--A7	07351030	12/17/07
12	96004--A8	07351031	12/17/07
13	96005--A9	07351032	12/17/07
14	96006--A10	07351033	12/17/07
15	96007--A11	07351034	12/17/07
16	96008--A12	07351035	12/17/07
17	96009--A13	07351020	12/17/07
18	96010--A14	07351021	12/17/07
19	96011--A15	07351022	12/17/07
20	96012--A16	07351046	12/17/07
21	96013--A17	07351036	12/17/07
22	96014--A18	07351023	12/17/07
23	96015--A19	07351037	12/17/07
24	96016--A20	07351038	12/17/07
25	96017--A21	07351039	12/17/07
26	96018--ATIC1	07351040	12/17/07
27	96019--ATIC2	07351041	12/17/07

THIS DWG PREPARED FROM COMPUTER INPUT (LOADS & DIMENSIONS) SUBMITTED BY TRUSS MFR.

Top chord 2x6 SP #2 N :T1 2x6 SP SS:
:T5 2x6 SP #2 Dense:
Bot chord 2x4 SP #2 N
Webs 2x4 SP #2 N

Gable end supports 8" max rake overhang.

See DWGS A11015EE0207 & GBLLETIN0207 for more requirements.

(A) Continuous lateral bracing equally spaced on member. Or 1x4 "T" brace. 80% length of web member. Same species & grade or better, attached with 8d Box or Gun (0.113"x2.5",min.)nails @ 6" OC.

The overall height of this truss excluding overhang is 11-0-4.

+ MEMBER TO BE LATERALLY BRACED FOR HORIZONTAL WIND LOADS. BRACING SYSTEM TO BE DESIGNED AND FURNISHED BY OTHERS.

(**) 2 plate(s) require special positioning. Refer to scaled plate plot details for special positioning requirements.

110 mph wind, 15.00 ft mean hgt, ASCE 7-02, CLOSED bldg, Located anywhere in roof, CAT II, EXP B, wind TC DL=5.0 psf, wind BC DL=5.0 psf. Iw=1.00 GCpi(+/-)=0.18

Wind reactions based on MWFRS pressures.

Deflection meets L/240 live and L/180 total load.

WARNING: Furnish a copy of this DWG to the installation contractor. Special care must be taken during handling, shipping and installation of trusses. See "WARNING" note below.

THE BUILDING DESIGNER IS RESPONSIBLE FOR THE DESIGN OF THE ROOF AND CEILING DIAPHRAGMS, GABLE END SHEAR WALLS, AND SUPPORTING SHEAR WALLS. SHEAR WALLS MUST PROVIDE CONTINUOUS LATERAL RESTRAINT TO THE GABLE END. ALL CONNECTIONS TO BE DESIGNED BY THE BUILDING DESIGNER.

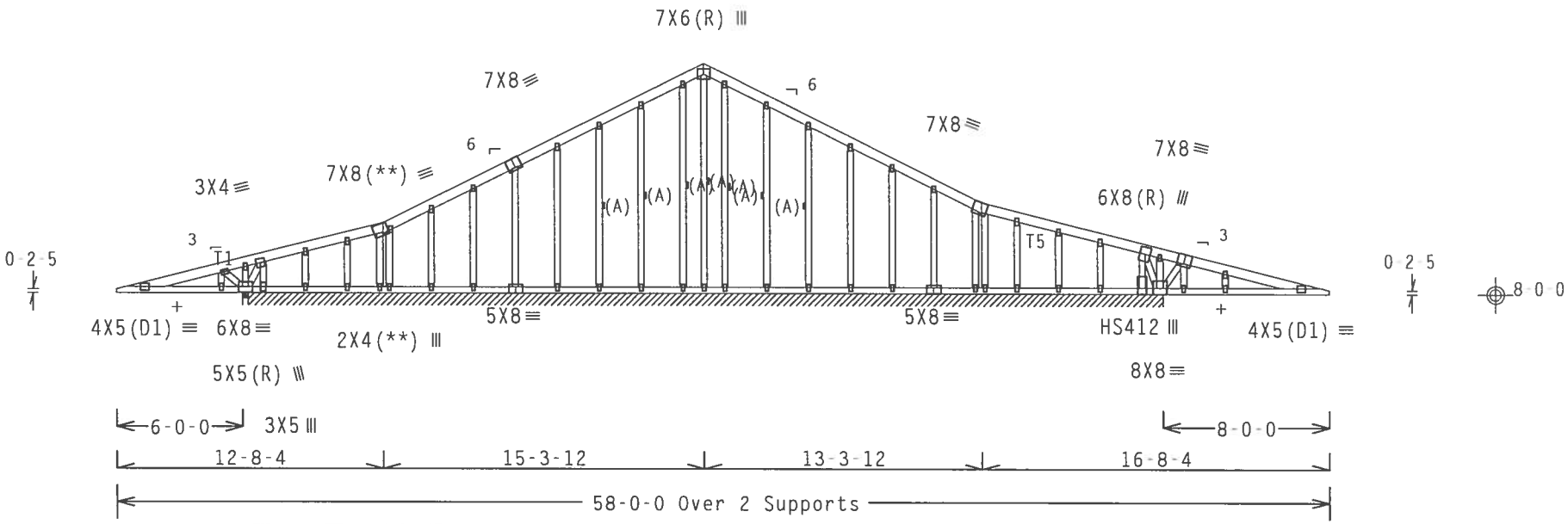

R=2689 U=536 W=3.5"
R=115 PLF U=27 PLF W=43-8-8

Note: All Plates Are 2X4 Except As Shown.

Design Crit: TPI-2002(STD)/FBC

PLT TYP. 20 Gauge HS,Wave Cq/RT=1.00(1.25)/0(0) 7.38.0810.00 QTY:1 FL/-/5/-/-/R/- Scale =.125"/Ft.

ALPINE
ITW Building Components Group, Inc.
Haines City, FL 33844
FL Certificate of Authorization # 0 278

WARNING TRUSSES REQUIRE EXTREME CARE IN FABRICATION, HANDLING, SHIPPING, INSTALLING AND BRACING. REFER TO BCSI (BUILDING COMPONENT SAFETY INFORMATION), PUBLISHED BY TPI (TRUSS PLATE INSTITUTE, 218 NORTH LEE STREET, SUITE 312, ALEXANDRIA, VA. 22314) AND WTCA (WOOD TRUSS COUNCIL OF AMERICA, 6300 ENTERPRISE LANE, MADISON, WI 53719) FOR SAFETY PRACTICES PRIOR TO PERFORMING THESE FUNCTIONS. UNLESS OTHERWISE INDICATED TOP CHORD SHALL HAVE PROPERLY ATTACHED STRUCTURAL PANELS AND BOTTOM CHORD SHALL HAVE A PROPERLY ATTACHED RIGID CEILING.

IMPORTANTFURNISH A COPY OF THIS DESIGN TO THE INSTALLATION CONTRACTOR. ITW BCG, INC. SHALL NOT BE RESPONSIBLE FOR ANY DEVIATION FROM THIS DESIGN; ANY FAILURE TO BUILD THE TRUSS IN CONFORMANCE WITH TPI; OR FABRICATING, HANDLING, SHIPPING, INSTALLING & BRACING OF TRUSSES. DESIGN CONFORMS WITH APPLICABLE PROVISIONS OF NDS (NATIONAL DESIGN SPEC. BY AF&PA) AND TPI. ITW BCG CONNECTOR PLATES ARE MADE OF 20/18/16GA (W,H/SS/K) ASTM A653 GRADE 40/60 (W, K/H,SS) GALV. STEEL. APPLY PLATES TO EACH FACE OF TRUSS AND, UNLESS OTHERWISE LOCATED ON THIS DESIGN, POSITION PER DRAWINGS 160A-Z. ANY INSPECTION OF PLATES FOLLOWED BY (1) SHALL BE PER ANNEX A3 OF TPI1-2002 SEC.3. A SEAL ON THIS DRAWING INDICATES ACCEPTANCE OF PROFESSIONAL ENGINEERING RESPONSIBILITY SOLELY FOR THE TRUSS COMPONENT DESIGN SHOWN. THE SUITABILITY AND USE OF THIS COMPONENT FOR ANY BUILDING IS THE RESPONSIBILITY OF THE BUILDING DESIGNER PER ANSI/TPI 1 SEC. 2.

JAMES F. COLLINS, JR. LICENSE No. 52212 STATE OF FLORIDA PROFESSIONAL ENGINEER

Dec 17, 2007

TC LL	20.0 PSF	REF	R215-- 95993
TC DL	10.0 PSF	DATE	12/17/07
BC DL	10.0 PSF	DRW	HCUSR215 07351042
BC LL	0.0 PSF	HC-ENG	WHK/WHK
TOT.LD.	40.0 PSF	SEQN-	89522
DUR.FAC.	1.25	FROM	LRB
SPACING	SEE ABOVE	JREF-	1TDD215_Z02

(4909 /THERESA BARBALE /OWNER BUILDER -- , ** - 2)

Top chord 2x4 SP #2 N
Bot chord 2x4 SP #2 N
Webs 2x4 SP #2 N

Truss spaced at 24.0" OC designed to support 2-0-0 top chord outlookers. Cladding load shall not exceed 0.00 PSF. Top chord must not be cut or notched.

(A) Continuous lateral bracing equally spaced on member. Or 1x4 "T" brace. 80% length of web member. Same species & grade or better, attached with 8d Box or Gun (0.113"x2.5",min.)nails @ 6" OC.

The overall height of this truss excluding overhang is 11-0-4.

THE BUILDING DESIGNER IS RESPONSIBLE FOR THE DESIGN OF THE ROOF AND CEILING DIAPHRAGMS, GABLE END SHEAR WALLS, AND SUPPORTING SHEAR WALLS. SHEAR WALLS MUST PROVIDE CONTINUOUS LATERAL RESTRAINT TO THE GABLE END. ALL CONNECTIONS TO BE DESIGNED BY THE BUILDING DESIGNER.

+ MEMBER TO BE LATERALLY BRACED FOR HORIZONTAL WIND LOADS. BRACING SYSTEM TO BE DESIGNED AND FURNISHED BY OTHERS.

110 mph wind, 15.00 ft mean hgt, ASCE 7-02, CLOSED bldg, Located anywhere in roof, CAT II, EXP B, wind TC DL=5.0 psf, wind BC DL=5.0 psf. Iw=1.00 GCpi(+/-)=0.18

Wind reactions based on MWFRS pressures.

See DWGS A11015EE0207 & GBLLETIN0207 for more requirements.

Deflection meets L/240 live and L/180 total load.

WARNING: Furnish a copy of this DWG to the installation contractor. Special care must be taken during handling, shipping and installation of trusses. See "WARNING" note below.

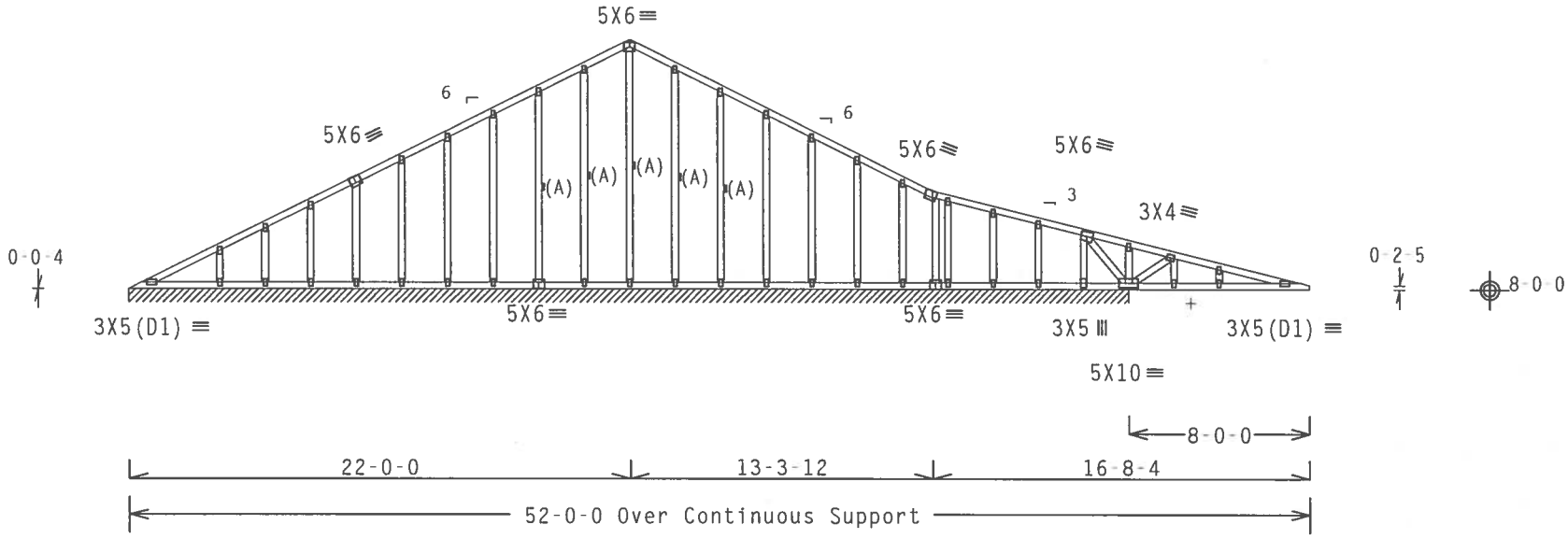

R=156 PLF U=25 PLF W=44-0-0

Note: All Plates Are 2X4 Except As Shown.

Design Crit: TPI-2002(STD)/FBC

PLT TYP. Wave Cq/RT=1.00(1.25)/0(0) 7.38.0810 QTY:1 FL/-/5/-/-/R/- Scale =.125"/Ft.

ALPINE

ITW Building Components Group, Inc.
Haines City, FL 33844
FL Certificate of Authorization # 0 278

WARNING TRUSSES REQUIRE EXTREME CARE IN FABRICATION, HANDLING, SHIPPING, INSTALLING AND BRACING. REFER TO BCSI (BUILDING COMPONENT SAFETY INFORMATION), PUBLISHED BY TPI (TRUSS PLATE INSTITUTE, 218 NORTH LEE STREET, SUITE 312, ALEXANDRIA, VA. 22314) AND WTCA (WOOD TRUSS COUNCIL OF AMERICA, 6300 ENTERPRISE LANE, MADISON, WI 53719) FOR SAFETY PRACTICES PRIOR TO PERFORMING THESE FUNCTIONS. UNLESS OTHERWISE INDICATED TOP CHORD SHALL HAVE PROPERLY ATTACHED STRUCTURAL PANELS AND BOTTOM CHORD SHALL HAVE A PROPERLY ATTACHED RIGID CEILING.

IMPORTANT FURNISH A COPY OF THIS DESIGN TO THE INSTALLATION CONTRACTOR. ITW BCG, INC. SHALL NOT BE RESPONSIBLE FOR ANY DEVIATION FROM THIS DESIGN; ANY FAILURE TO BUILD THE TRUSS IN COMFORMANCE WITH TPI; OR FABRICATING, HANDLING, SHIPPING, INSTALLING & BRACING OF TRUSSES. DESIGN CONFORMS WITH APPLICABLE PROVISIONS OF NDS (NATIONAL DESIGN SPEC. BY AF&PA) AND TPI. ITW BCG CONNECTOR PLATES ARE MADE OF 20/18/16GA (W,H/SS/K) ASTM A653 GRADE 40/60 (W, K/H,SS) GALV. STEEL. APPLY PLATES TO EACH FACE OF TRUSS AND, UNLESS OTHERWISE LOCATED ON THIS DESIGN, POSITION PER DRAWINGS 160A-Z. ANY INSPECTION OF PLATES FOLLOWED BY (1) SHALL BE PER ANNEX A3 OF TPI1-2002 SEC.3. A SEAL ON THIS DRAWING INDICATES ACCEPTANCE OF PROFESSIONAL ENGINEERING RESPONSIBILITY SOLELY FOR THE TRUSS COMPONENT DESIGN SHOWN. THE SUITABILITY AND USE OF THIS COMPONENT FOR ANY BUILDING IS THE RESPONSIBILITY OF THE BUILDING DESIGNER PER ANSI/TPI 1 SEC. 2.

JAMES F. COLLINS JR. LICENSE No. 52212 STATE OF FLORIDA PROFESSIONAL ENGINEER

Dec 17, 07

TC LL	20.0 PSF	REF	R215-- 95994
TC DL	10.0 PSF	DATE	12/17/07
BC DL	10.0 PSF	DRW	HCUSR215 07351043
BC LL	0.0 PSF	HC-ENG	WHK/WHK
TOT.LD.	40.0 PSF	SEQN-	89529
DUR.FAC.	1.25	FROM	LRB
SPACING	SEE ABOVE	JREF-	1TDD215_Z02

(4909 /THERESA BARBALE /OWNER BUILDER -- , ** - 3)

Top chord 2x4 SP #2 N
Bot chord 2x4 SP #2 N
Webs 2x4 SP #2 N

110 mph wind, 18.65 ft mean hgt, ASCE 7-02, CLOSED bldg, Located anywhere in roof, CAT II, EXP B, wind TC DL=5.0 psf, wind BC DL=2.0 psf. Iw=1.00 GCpi(+/-)=0.18

Wind reactions based on MWFRS pressures.

REFER TO PIGBACKA0207 OR PIGBACKB0207 FOR PIGYBACK DETAILS.
TOP CHORD OF SUPPORTING TRUSS UNDER PIGGYBACK TO BE BRACED @ 24" O.C, UNLESS OTHERWISE SPECIFIED.

SPECIAL LOADS
------(LUMBER DUR.FAC.=1.25 / PLATE DUR.FAC.=1.25)

TC - From	66 PLF	at	-0.62 to	66 PLF	at	0.87
TC - From	66 PLF	at	0.87 to	66 PLF	at	2.36
BC - From	4 PLF	at	-0.62 to	4 PLF	at	2.36

Deflection meets L/240 live and L/180 total load.

The overall height of this truss excluding overhang is 1-3-4.

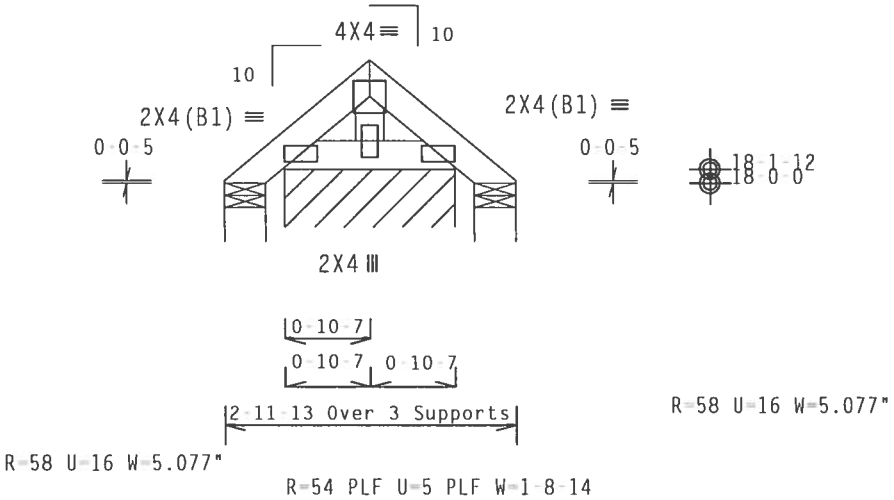

Design Crit: TPI-2002(STD)/FBC

PLT TYP. Wave Cq/RT=1.00(1.25)/0(0) 7.38.0810-12 QTY:1 FL/-/5/-/-/R/- Scale =.5"/Ft.

ALPINE
ITW Building Components Group, Inc.
Haines City, FL 33844
FL Certificate of Authorization # 0 278

WARNING TRUSSES REQUIRE EXTREME CARE IN FABRICATION, HANDLING, SHIPPING, INSTALLING AND BRACING. REFER TO BCSI (BUILDING COMPONENT SAFETY INFORMATION), PUBLISHED BY TPI (TRUSS PLATE INSTITUTE, 218 NORTH LEE STREET, SUITE 312, ALEXANDRIA, VA. 22314) AND WTCA (WOOD TRUSS COUNCIL OF AMERICA, 6300 ENTERPRISE LANE, MADISON, WI 53719) FOR SAFETY PRACTICES PRIOR TO PERFORMING THESE FUNCTIONS. UNLESS OTHERWISE INDICATED TOP CHORD SHALL HAVE PROPERLY ATTACHED STRUCTURAL PANELS AND BOTTOM CHORD SHALL HAVE A PROPERLY ATTACHED RIGID CEILING.

IMPORTANTFURNISH A COPY OF THIS DESIGN TO THE INSTALLATION CONTRACTOR. ITW BCG, INC. SHALL NOT BE RESPONSIBLE FOR ANY DEVIATION FROM THIS DESIGN; ANY FAILURE TO BUILD THE TRUSS IN CONFORMANCE WITH TPI; OR FABRICATING, HANDLING, SHIPPING, INSTALLING & BRACING OF TRUSSES. DESIGN CONFORMS WITH APPLICABLE PROVISIONS OF NDS (NATIONAL DESIGN SPEC. BY AF&PA) AND TPI. ITW BCG CONNECTOR PLATES ARE MADE OF 20/18/16GA (W,H/SS/K) ASTM A653 GRADE 40/60 (W, K/H,SS) GALV. STEEL. APPLY PLATES TO EACH FACE OF TRUSS AND, UNLESS OTHERWISE LOCATED ON THIS DESIGN, POSITION PER DRAWINGS 160A-Z. ANY INSPECTION OF PLATES FOLLOWED BY (1) SHALL BE PER ANNEX A3 OF TPI1-2002 SEC.3. A SEAL ON THIS DRAWING INDICATES ACCEPTANCE OF PROFESSIONAL ENGINEERING RESPONSIBILITY SOLELY FOR THE TRUSS COMPONENT DESIGN SHOWN. THE SUITABILITY AND USE OF THIS COMPONENT FOR ANY BUILDING IS THE RESPONSIBILITY OF THE BUILDING DESIGNER PER ANSI/TPI 1 SEC. 2.

JAMES F. COLLINS JR. LICENSE No. 52272 STATE OF FLORIDA PROFESSIONAL ENGINEER
Dec 17, 07

TC LL	20.0 PSF	REF	R215-- 95995
TC DL	10.0 PSF	DATE	12/17/07
BC DL	10.0 PSF	DRW	HCUSR215 07351044
BC LL	0.0 PSF	HC-ENG	WHK/WHK
TOT.LD.	40.0 PSF	SEQN-	89359
DUR.FAC.	1.25	FROM	LRB
SPACING	24.0"	JREF-	1TDD215_Z02

(4909-/THERESA BARBALE /OWNER BUILDER -- , ** - 4)

Top chord 2x4 SP #2 N
Bot chord 2x4 SP #2 N
Webs 2x4 SP #2 N

Gable end supports 8" max rake overhang.

See DWGS A11015EE0207 & GBLLETIN0207 for more requirements.

(A) Continuous lateral bracing equally spaced on member. Or 1x4 "T" brace. 80% length of web member. Same species & grade or better, attached with 8d Box or Gun (0.113"x2.5",min.)nails @ 6" OC.

110 mph wind, 15.00 ft mean hgt, ASCE 7-02, CLOSED bldg, Located anywhere in roof, CAT II, EXP B, wind TC DL=5.0 psf, wind BC DL=5.0 psf. Iw=1.00 GCpi(+/-)=0.18

Wind reactions based on MWFRS pressures.

(B) 1x4 "L" brace. 80% length of web member. Same species & grade or better. Attach with 8d Box or Gun (0.113"x2.5",min.)nails @ 6" OC.

Deflection meets L/240 live and L/180 total load.

Fasten rated sheathing to one face of this frame.

The overall height of this truss excluding overhang is 10-8-8.

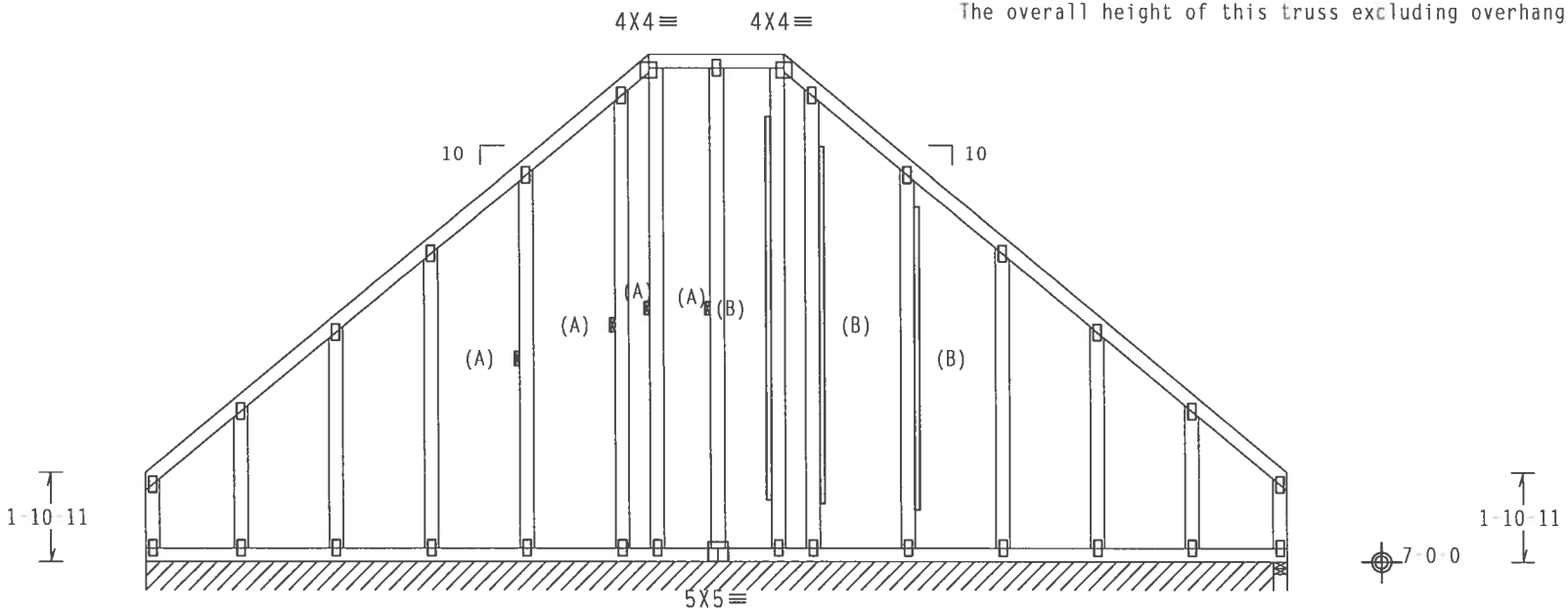

10-6-15 | 2-10-1 | 10-6-15

24-0-0 Over 2 Supports

R=139 PLF U=21 PLF W=23-8-8

R=115 Rw=950 U=901 W=3.5"

Note: All Plates Are 2X4 Except As Shown.

Design Crit: TPI-2002(STD)/FBC

PLT TYP. Wave | Cq/RT=1.00(1.25)/0(0) | 7.38.0810 | QTY:1 | FL/-/5/-/-/R/- | Scale =.25"/Ft.

ALPINE

ITW Building Components Group, Inc.
Haines City, FL 33844
FL Certificate of Authorization # 0 278

WARNING TRUSSES REQUIRE EXTREME CARE IN FABRICATION, HANDLING, SHIPPING, INSTALLING AND BRACING. REFER TO BCSI (BUILDING COMPONENT SAFETY INFORMATION), PUBLISHED BY TPI (TRUSS PLATE INSTITUTE, 218 NORTH LEE STREET, SUITE 312, ALEXANDRIA, VA. 22314) AND WTCA (WOOD TRUSS COUNCIL OF AMERICA, 6300 ENTERPRISE LANE, MADISON, WI 53719) FOR SAFETY PRACTICES PRIOR TO PERFORMING THESE FUNCTIONS. UNLESS OTHERWISE INDICATED TOP CHORD SHALL HAVE PROPERLY ATTACHED STRUCTURAL PANELS AND BOTTOM CHORD SHALL HAVE A PROPERLY ATTACHED RIGID CEILING.

IMPORTANTFURNISH A COPY OF THIS DESIGN TO THE INSTALLATION CONTRACTOR. ITW BCG, INC. SHALL NOT BE RESPONSIBLE FOR ANY DEVIATION FROM THIS DESIGN; ANY FAILURE TO BUILD THE TRUSS IN CONFORMANCE WITH TPI; OR FABRICATING, HANDLING, SHIPPING, INSTALLING & BRACING OF TRUSSES. DESIGN CONFORMS WITH APPLICABLE PROVISIONS OF NDS (NATIONAL DESIGN SPEC. BY AF&PA) AND TPI. ITW BCG CONNECTOR PLATES ARE MADE OF 20/18/16GA (W,H/SS/K) ASTM A653 GRADE 40/60 (W, K/H,SS) GALV. STEEL. APPLY PLATES TO EACH FACE OF TRUSS AND, UNLESS OTHERWISE LOCATED ON THIS DESIGN, POSITION PER DRAWINGS 160A-Z. ANY INSPECTION OF PLATES FOLLOWED BY (1) SHALL BE PER ANNEX A3 OF TPI1-2002 SEC.3. A SEAL ON THIS DRAWING INDICATES ACCEPTANCE OF PROFESSIONAL ENGINEERING RESPONSIBILITY SOLELY FOR THE TRUSS COMPONENT DESIGN SHOWN. THE SUITABILITY AND USE OF THIS COMPONENT FOR ANY BUILDING IS THE RESPONSIBILITY OF THE BUILDING DESIGNER PER ANSI/TPI 1 SEC. 2.

JAMES F. COLLINS, JR. LICENSE No. 52212 STATE OF FLORIDA PROFESSIONAL ENGINEER

Dec 17 '07

TC LL	20.0 PSF	REF	R215-- 95996
TC DL	10.0 PSF	DATE	12/17/07
BC DL	10.0 PSF	DRW	HCUSR215 07351045
BC LL	0.0 PSF	HC-ENG	WHK/WHK
TOT.LD.	40.0 PSF	SEQN-	89352
DUR.FAC.	1.25	FROM	LRB
SPACING	SEE ABOVE	JREF-	1TDD215_Z02

(4909 /THERESA BARBALE /OWNER BUILDER -- , ** - A1)

Top chord 2x6 SP #2 N :T2, T4 2x6 SP #2 Dense:
Bot chord 2x4 SP #2 N :B1 2x6 SP #2 Dense:
:B4 2x4 SP SS:
Webs 2x4 SP #2 N

SPECIAL LOADS
------(LUMBER DUR.FAC.=1.25 / PLATE DUR.FAC.=1.25)

TC -	From	62 PLF at 0.00 to	62 PLF at 11.18
TC -	From	62 PLF at 11.18 to	62 PLF at 28.00
TC -	From	62 PLF at 28.00 to	62 PLF at 41.41
TC -	From	61 PLF at 41.41 to	61 PLF at 59.33
BC -	From	20 PLF at 0.00 to	20 PLF at 19.59
BC -	From	20 PLF at 19.59 to	20 PLF at 34.85
BC -	From	20 PLF at 34.85 to	20 PLF at 49.51
BC -	From	20 PLF at 49.51 to	20 PLF at 58.00

BC - 57 LB Conc. Load at 2.00, 4.00
BC - 86 LB Conc. Load at 6.00

Wind reactions based on MWFRS pressures.

Left end vertical not exposed to wind pressure.

110 mph wind, 15.00 ft mean hgt, ASCE 7-02, CLOSED bldg, Located anywhere in roof, CAT II, EXP B, wind TC DL=5.0 psf, wind BC DL=5.0 psf. Iw=1.00 GCpi(+/-)=0.18

(B) Continuous lateral bracing equally spaced on member. Or 1x4 "T" brace. 80% length of web member. Same species & grade or better, attached with 8d Box or Gun (0.113"x2.5",min.)nails @ 6" OC.

(A) Continuous lateral bracing equally spaced on member. Or 2x6 "T" brace. 80% length of web member. Same species & grade or better, attached with 16d Box or Gun (0.135"x3.5",min.)nails @ 6" OC.

Deflection meets L/240 live and L/180 total load.

WARNING: Furnish a copy of this DWG to the installation contractor. Special care must be taken during handling, shipping and installation of trusses. See "WARNING" note below.

The overall height of this truss excluding overhang is 11-4-3.

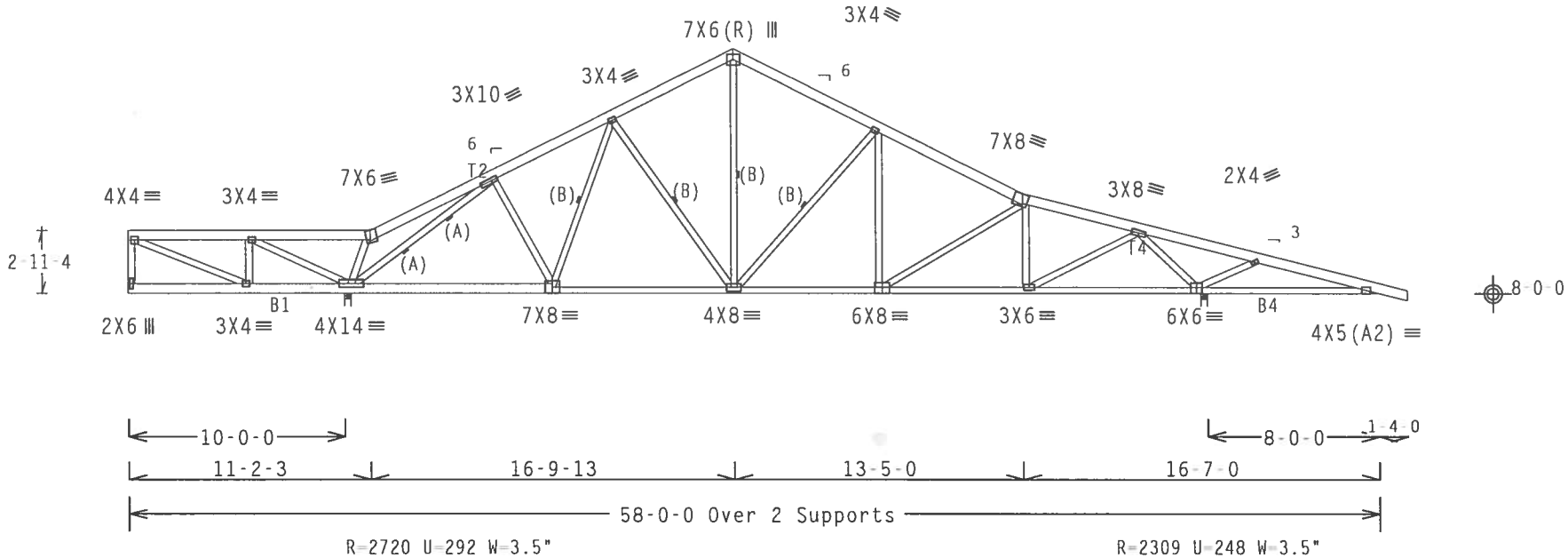

Design Crit: TPI-2002(STD)/FBC

PLT TYP. Wave Cq/RT=1.00(1.25)/0(0) 7.38.0810.03 QTY:1 FL/-/5/-/-/R/- Scale =.125"/Ft.

ALPINE
ITW Building Components Group, Inc.
Haines City, FL 33844
FL Certificate of Authorization # 0 278

WARNING TRUSSES REQUIRE EXTREME CARE IN FABRICATION, HANDLING, SHIPPING, INSTALLING AND BRACING. REFER TO BCSI (BUILDING COMPONENT SAFETY INFORMATION), PUBLISHED BY TPI (TRUSS PLATE INSTITUTE, 218 NORTH LEE STREET, SUITE 312, ALEXANDRIA, VA. 22314) AND WTCA (WOOD TRUSS COUNCIL OF AMERICA, 6300 ENTERPRISE LANE, MADISON, WI 53719) FOR SAFETY PRACTICES PRIOR TO PERFORMING THESE FUNCTIONS. UNLESS OTHERWISE INDICATED TOP CHORD SHALL HAVE PROPERLY ATTACHED STRUCTURAL PANELS AND BOTTOM CHORD SHALL HAVE A PROPERLY ATTACHED RIGID CEILING.

IMPORTANTFURNISH A COPY OF THIS DESIGN TO THE INSTALLATION CONTRACTOR. ITW BCG, INC. SHALL NOT BE RESPONSIBLE FOR ANY DEVIATION FROM THIS DESIGN; ANY FAILURE TO BUILD THE TRUSS IN COMFORMANCE WITH TPI; OR FABRICATING, HANDLING, SHIPPING, INSTALLING & BRACING OF TRUSSES. DESIGN CONFORMS WITH APPLICABLE PROVISIONS OF NDS (NATIONAL DESIGN SPEC. BY AF&PA) AND TPI. ITW BCG CONNECTOR PLATES ARE MADE OF 20/18/16GA (W,H/SS/K) ASTM A653 GRADE 40/60 (W, K/H,SS) GALV. STEEL. APPLY PLATES TO EACH FACE OF TRUSS AND, UNLESS OTHERWISE LOCATED ON THIS DESIGN, POSITION PER DRAWINGS 160A-Z. ANY INSPECTION OF PLATES FOLLOWED BY (1) SHALL BE PER ANNEX A3 OF TPI1-2002 SEC.3. A SEAL ON THIS DRAWING INDICATES ACCEPTANCE OF PROFESSIONAL ENGINEERING RESPONSIBILITY SOLELY FOR THE TRUSS COMPONENT DESIGN SHOWN. THE SUITABILITY AND USE OF THIS COMPONENT FOR ANY BUILDING IS THE RESPONSIBILITY OF THE BUILDING DESIGNER PER ANSI/TPI 1 SEC. 2.

JAMES F. COLLINS, JR. LICENSE No. 52212 STATE OF FLORIDA PROFESSIONAL ENGINEER
Dec

TC LL	20.0 PSF	REF	R215-- 95997
TC DL	10.0 PSF	DATE	12/17/07
BC DL	10.0 PSF	DRW	HCUSR215 07351024
BC LL	0.0 PSF	HC-ENG	WHK/WHK
TOT.LD.	40.0 PSF	SEQN-	89494
DUR.FAC.	1.25	FROM	LRB
SPACING	SEE ABOVE	JREF-	1TDD215_Z02

(4909 /THERESA BARBALE /OWNER BUILDER -- , ** - A2)

THIS DWG PREPARED FROM COMPUTER INPUT (LOADS & DIMENSIONS) SUBMITTED BY TRUSS MFR.

Top chord 2x6 SP #2 N :T4 2x6 SP #2 Dense:
Bot chord 2x4 SP #2 N :B4 2x4 SP SS:
Webs 2x4 SP #2 N

Left end vertical not exposed to wind pressure.

(A) Continuous lateral bracing equally spaced on member. Or 1x4 "T" brace. 80% length of web member. Same species & grade or better, attached with 8d Box or Gun (0.113"x2.5",min.)nails @ 6" OC.

The overall height of this truss excluding overhang is 11-4-3.

110 mph wind, 15.00 ft mean hgt, ASCE 7-02, CLOSED bldg, Located anywhere in roof, CAT II, EXP B, wind TC DL=5.0 psf, wind BC DL=5.0 psf. Iw=1.00 GCpi(+/-)=0.18

Wind reactions based on MWFRS pressures.

Deflection meets L/240 live and L/180 total load.

WARNING: Furnish a copy of this DWG to the installation contractor. Special care must be taken during handling, shipping and installation of trusses. See "WARNING" note below.

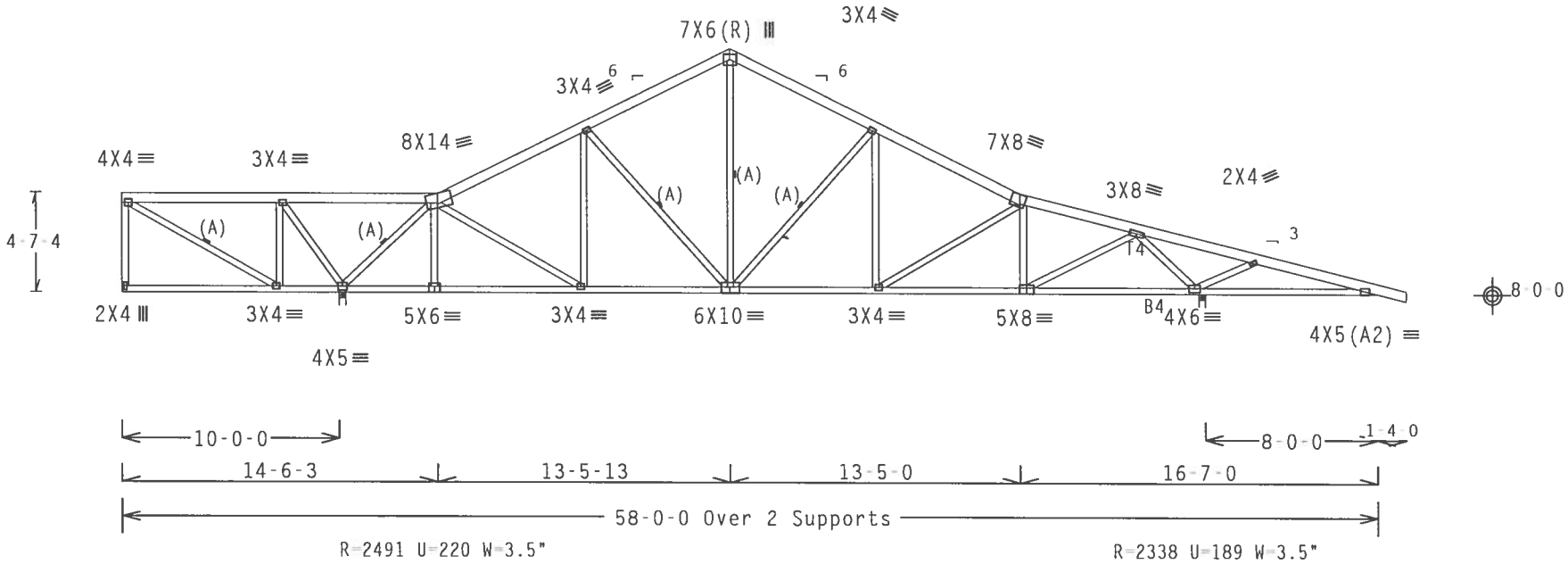

Design Crit: TPI-2002(STD)/FBC

PLT TYP. Wave Cq/RT=1.00(1.25)/0(0) 7.38.0810.0 QTY:1 FL/-/5/-/-/R/- Scale =.125"/Ft.

ALPINE
ITW Building Components Group, Inc.
Haines City, FL 33844
FL Certificate of Authorization # 0 278

WARNING TRUSSES REQUIRE EXTREME CARE IN FABRICATION, HANDLING, SHIPPING, INSTALLING AND BRACING. REFER TO BCSI (BUILDING COMPONENT SAFETY INFORMATION), PUBLISHED BY TPI (TRUSS PLATE INSTITUTE, 218 NORTH LEE STREET, SUITE 312, ALEXANDRIA, VA, 22314) AND WTCA (WOOD TRUSS COUNCIL OF AMERICA, 6300 ENTERPRISE LANE, MADISON, WI 53719) FOR SAFETY PRACTICES PRIOR TO PERFORMING THESE FUNCTIONS. UNLESS OTHERWISE INDICATED TOP CHORD SHALL HAVE PROPERLY ATTACHED STRUCTURAL PANELS AND BOTTOM CHORD SHALL HAVE A PROPERLY ATTACHED RIGID CEILING.

IMPORTANTFURNISH A COPY OF THIS DESIGN TO THE INSTALLATION CONTRACTOR. ITW BCG, INC. SHALL NOT BE RESPONSIBLE FOR ANY DEVIATION FROM THIS DESIGN; ANY FAILURE TO BUILD THE TRUSS IN CONFORMANCE WITH TPI; OR FABRICATING, HANDLING, SHIPPING, INSTALLING & BRACING OF TRUSSES. DESIGN CONFORMS WITH APPLICABLE PROVISIONS OF NDS (NATIONAL DESIGN SPEC. BY AF&PA) AND TPI. ITW BCG CONNECTOR PLATES ARE MADE OF 20/18/16GA (W,H/SS/K) ASTM A653 GRADE 40/60 (W, K/H,SS) GALV. STEEL. APPLY PLATES TO EACH FACE OF TRUSS AND, UNLESS OTHERWISE LOCATED ON THIS DESIGN, POSITION PER DRAWINGS 160A-Z. ANY INSPECTION OF PLATES FOLLOWED BY (1) SHALL BE PER ANNEX A3 OF TPI1-2002 SEC.3. A SEAL ON THIS DRAWING INDICATES ACCEPTANCE OF PROFESSIONAL ENGINEERING RESPONSIBILITY SOLELY FOR THE TRUSS COMPONENT DESIGN SHOWN. THE SUITABILITY AND USE OF THIS COMPONENT FOR ANY BUILDING IS THE RESPONSIBILITY OF THE BUILDING DESIGNER PER ANSI/TPI 1 SEC. 2.

JAMES F. COLLINS JR. LICENSE No. 52312 STATE OF FLORIDA PROFESSIONAL ENGINEER

Dec 17, 07

TC LL	20.0 PSF	REF	R215-- 95998
TC DL	10.0 PSF	DATE	12/17/07
BC DL	10.0 PSF	DRW	HCUSR215 07351025
BC LL	0.0 PSF	HC-ENG	WHK/WHK
TOT.LD.	40.0 PSF	SEQN-	89499
DUR.FAC.	1.25	FROM	LRB
SPACING	24.0"	JREF-	1TDD215_Z02

(4909 /THERESA BARBALE /OWNER BUILDER -- , ** - A3)

Top chord 2x6 SP #2 Dense :T2, T3 2x6 SP #2 N:
Bot chord 2x4 SP #2 N :B4 2x4 SP SS:
Webs 2x4 SP #2 N

Left end vertical not exposed to wind pressure.

(A) Continuous lateral bracing equally spaced on member. Or 1x4 "T" brace. 80% length of web member. Same species & grade or better, attached with 8d Box or Gun (0.113"x2.5",min.)nails @ 6" OC.

The overall height of this truss excluding overhang is 11-4-3.

110 mph wind, 15.00 ft mean hgt, ASCE 7-02, CLOSED bldg, Located anywhere in roof, CAT II, EXP B, wind TC DL=5.0 psf, wind BC DL=5.0 psf. Iw=1.00 GCpi(+/-)=0.18

Wind reactions based on MWFRS pressures.

Deflection meets L/240 live and L/180 total load.

WARNING: Furnish a copy of this DWG to the installation contractor. Special care must be taken during handling, shipping and installation of trusses. See "WARNING" note below.

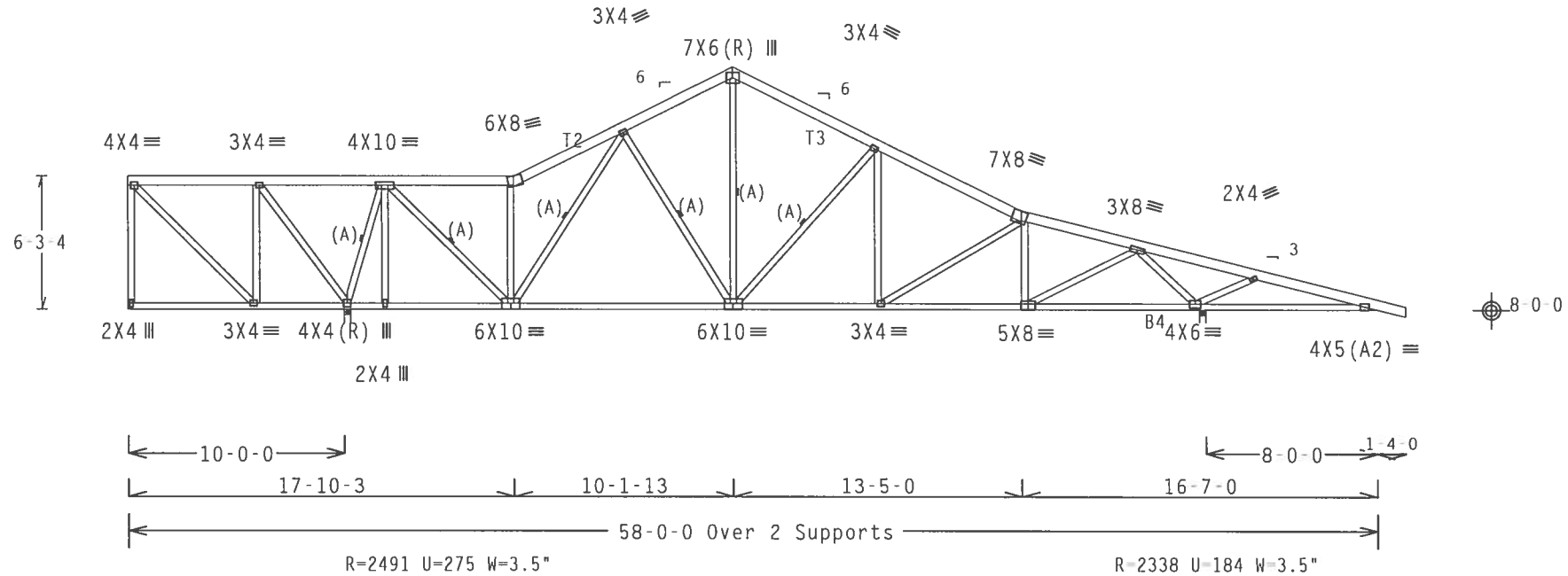

Design Crit: TPI-2002(STD)/FBC

PLT TYP. Wave Cq/RT=1.00(1.25)/0(0) 7.38.0810.0 QTY:1 FL/-/5/-/-/R/- Scale =.125"/Ft.

ALPINE
ITW Building Components Group, Inc.
Haines City, FL 33844
FL Certificate of Authorization # 0 278

WARNING TRUSSES REQUIRE EXTREME CARE IN FABRICATION, HANDLING, SHIPPING, INSTALLING AND BRACING. REFER TO BCSI (BUILDING COMPONENT SAFETY INFORMATION), PUBLISHED BY TPI (TRUSS PLATE INSTITUTE, 218 NORTH LEE STREET, SUITE 312, ALEXANDRIA, VA. 22314) AND WTCA (WOOD TRUSS COUNCIL OF AMERICA, 6300 ENTERPRISE LANE, MADISON, WI 53719) FOR SAFETY PRACTICES PRIOR TO PERFORMING THESE FUNCTIONS. UNLESS OTHERWISE INDICATED TOP CHORD SHALL HAVE PROPERLY ATTACHED STRUCTURAL PANELS AND BOTTOM CHORD SHALL HAVE A PROPERLY ATTACHED RIGID CEILING.

IMPORTANTFURNISH A COPY OF THIS DESIGN TO THE INSTALLATION CONTRACTOR. ITW BCG, INC. SHALL NOT BE RESPONSIBLE FOR ANY DEVIATION FROM THIS DESIGN; ANY FAILURE TO BUILD THE TRUSS IN CONFORMANCE WITH TPI; OR FABRICATING, HANDLING, SHIPPING, INSTALLING & BRACING OF TRUSSES. DESIGN CONFORMS WITH APPLICABLE PROVISIONS OF NDS (NATIONAL DESIGN SPEC. BY AF&PA) AND TPI. ITW BCG CONNECTOR PLATES ARE MADE OF 20/18/16GA (W,H/SS/K) ASTM A653 GRADE 40/60 (W, K/H,SS) GALV. STEEL. APPLY PLATES TO EACH FACE OF TRUSS AND, UNLESS OTHERWISE LOCATED ON THIS DESIGN, POSITION PER DRAWINGS 160A Z. ANY INSPECTION OF PLATES FOLLOWED BY (1) SHALL BE PER ANNEX A3 OF TPI1-2002 SEC.3. A SEAL ON THIS DRAWING INDICATES ACCEPTANCE OF PROFESSIONAL ENGINEERING RESPONSIBILITY SOLELY FOR THE TRUSS COMPONENT DESIGN SHOWN. THE SUITABILITY AND USE OF THIS COMPONENT FOR ANY BUILDING IS THE RESPONSIBILITY OF THE BUILDING DESIGNER PER ANSI/TPI 1 SEC. 2.

JAMES F. COLLINS, JR. LICENSE No. 52212 STATE OF FLORIDA PROFESSIONAL ENGINEER
Dec 17 07

TC LL	20.0 PSF	REF	R215-- 95999
TC DL	10.0 PSF	DATE	12/17/07
BC DL	10.0 PSF	DRW	HCUSR215 07351026
BC LL	0.0 PSF	HC-ENG	WHK/WHK
TOT.LD.	40.0 PSF	SEQN-	89504
DUR.FAC.	1.25	FROM	LRB
SPACING	24.0"	JREF-	1TDD215_Z02

(4909 /THERESA BARBALE /OWNER BUILDER -- , ** - A4)

Top chord 2x6 SP #2 N :T5 2x6 SP #2 Dense:
Bot chord 2x4 SP #2 N :B4 2x4 SP SS:
Webs 2x4 SP #2 N

Left end vertical not exposed to wind pressure.

(A) Continuous lateral bracing equally spaced on member. Or 1x4 "T" brace. 80% length of web member. Same species & grade or better, attached with 8d Box or Gun (0.113"x2.5",min.)nails @ 6" OC.

The overall height of this truss excluding overhang is 11-4-3.

110 mph wind, 15.00 ft mean hgt, ASCE 7-02, CLOSED bldg, not located within 6.50 ft from roof edge, CAT II, EXP B, wind TC DL=5.0 psf, wind BC DL=5.0 psf. Iw=1.00 GCpi(+/-)=0.18

Wind reactions based on MWFRS pressures.

Deflection meets L/240 live and L/180 total load.

WARNING: Furnish a copy of this DWG to the installation contractor. Special care must be taken during handling, shipping and installation of trusses. See "WARNING" note below.

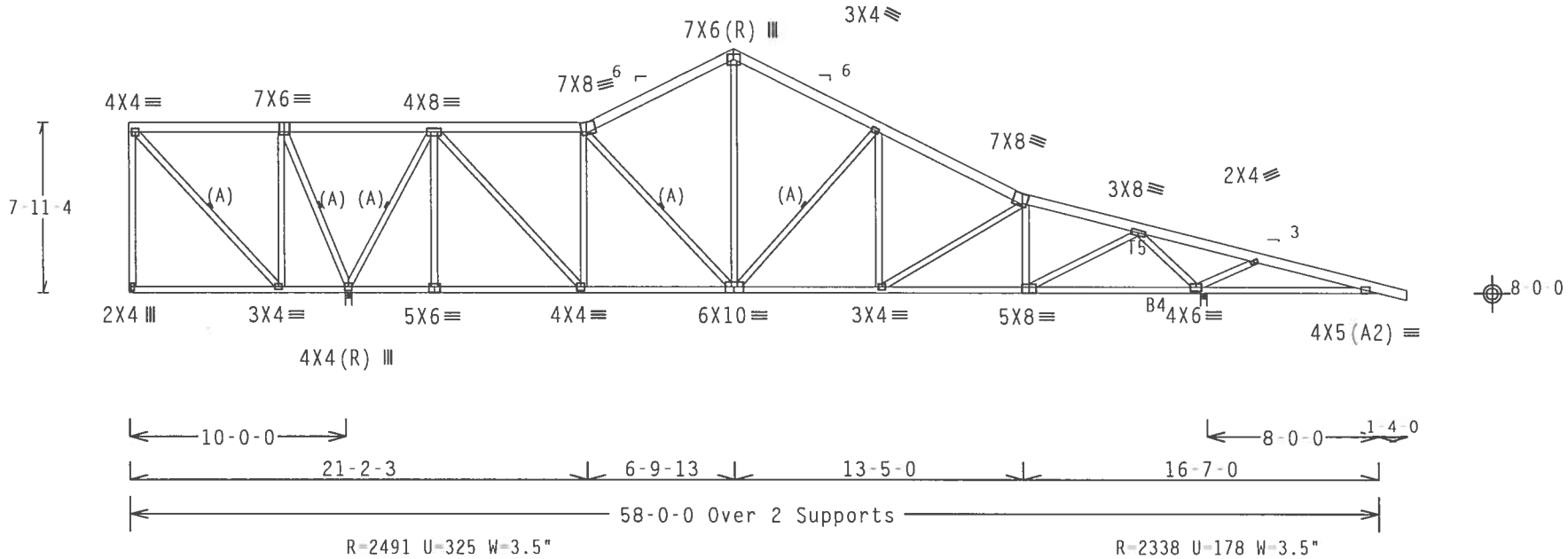

Design Crit: TPI-2002(STD)/FBC

PLT TYP. Wave Cq/RT=1.00(1.25)/0(0) 7.38.0810 QTY:1 FL/-/5/-/-/R/- Scale =.125"/Ft.

ALPINE
ITW Building Components Group, Inc.
Haines City, FL 33844
FL Certificate of Authorization # 0 278

WARNING TRUSSES REQUIRE EXTREME CARE IN FABRICATION, HANDLING, SHIPPING, INSTALLING AND BRACING. REFER TO BCSI (BUILDING COMPONENT SAFETY INFORMATION), PUBLISHED BY TPI (TRUSS PLATE INSTITUTE, 218 NORTH LEE STREET, SUITE 312, ALEXANDRIA, VA. 22314) AND WTCA (WOOD TRUSS COUNCIL OF AMERICA, 6300 ENTERPRISE LANE, MADISON, WI 53719) FOR SAFETY PRACTICES PRIOR TO PERFORMING THESE FUNCTIONS. UNLESS OTHERWISE INDICATED TOP CHORD SHALL HAVE PROPERLY ATTACHED STRUCTURAL PANELS AND BOTTOM CHORD SHALL HAVE A PROPERLY ATTACHED RIGID CEILING.

IMPORTANTFURNISH A COPY OF THIS DESIGN TO THE INSTALLATION CONTRACTOR. ITW BCG, INC. SHALL NOT BE RESPONSIBLE FOR ANY DEVIATION FROM THIS DESIGN; ANY FAILURE TO BUILD THE TRUSS IN CONFORMANCE WITH TPI; OR FABRICATING, HANDLING, SHIPPING, INSTALLING & BRACING OF TRUSSES. DESIGN CONFORMS WITH APPLICABLE PROVISIONS OF NDS (NATIONAL DESIGN SPEC. BY AF&PA) AND TPI. ITW BCG CONNECTOR PLATES ARE MADE OF 20/18/16GA (W,H/SS/K) ASTM A653 GRADE 40/60 (W, K/H,SS) GALV. STEEL. APPLY PLATES TO EACH FACE OF TRUSS AND, UNLESS OTHERWISE LOCATED ON THIS DESIGN, POSITION PER DRAWINGS 160A-Z. ANY INSPECTION OF PLATES FOLLOWED BY (1) SHALL BE PER ANNEX A3 OF TPI1-2002 SEC.3. A SEAL ON THIS DRAWING INDICATES ACCEPTANCE OF PROFESSIONAL ENGINEERING RESPONSIBILITY SOLELY FOR THE TRUSS COMPONENT DESIGN SHOWN. THE SUITABILITY AND USE OF THIS COMPONENT FOR ANY BUILDING IS THE RESPONSIBILITY OF THE BUILDING DESIGNER PER ANSI/TPI 1 SEC. 2.

JAMES F. COLLINS, JR. LICENSE No. 52212 STATE OF FLORIDA PROFESSIONAL ENGINEER
Dec 17 '07

TC LL	20.0 PSF	REF	R215-- 96000
TC DL	10.0 PSF	DATE	12/17/07
BC DL	10.0 PSF	DRW	HCUSR215 07351027
BC LL	0.0 PSF	HC-ENG	WHK/WHK
TOT.LD.	40.0 PSF	SEQN-	89509
DUR.FAC.	1.25	FROM	LRB
SPACING	24.0"	JREF-	1TDD215_Z02

(4909 /THERESA BARBALE /OWNER BUILDER -- , ** - A5)

Top chord 2x6 SP #2 N :T5 2x6 SP #2 Dense:
Bot chord 2x4 SP #2 N :B4 2x4 SP #2 Dense:
Webs 2x4 SP #2 N

110 mph wind, 15.00 ft mean hgt, ASCE 7-02, CLOSED bldg, not located within 6.50 ft from roof edge, CAT II, EXP B, wind TC DL=5.0 psf, wind BC DL=5.0 psf. Iw=1.00 GCpi(+/)=0.18

Wind reactions based on MWFRS pressures.

Left end vertical not exposed to wind pressure.

(A) Continuous lateral bracing equally spaced on member. Or 1x4 "T" brace. 80% length of web member. Same species & grade or better, attached with 8d Box or Gun (0.113"x2.5",min.)nails @ 6" OC.

Deflection meets L/240 live and L/180 total load.

The overall height of this truss excluding overhang is 11-4-3.

SPECIAL LOADS
------(LUMBER DUR.FAC.=1.25 / PLATE DUR.FAC.=1.25)

TC -	From	62 PLF	at 0.00	to	62 PLF	at 12.26
TC -	From	62 PLF	at 12.26	to	62 PLF	at 24.51
TC -	From	62 PLF	at 24.51	to	62 PLF	at 28.00
TC -	From	62 PLF	at 28.00	to	62 PLF	at 41.41
TC -	From	61 PLF	at 41.41	to	61 PLF	at 59.33
BC -	From	20 PLF	at 0.00	to	20 PLF	at 18.24
BC -	From	20 PLF	at 18.24	to	20 PLF	at 34.85
BC -	From	20 PLF	at 34.85	to	20 PLF	at 49.84
BC -	From	20 PLF	at 49.84	to	20 PLF	at 58.00

(B) Continuous lateral bracing equally spaced on member. Or 2x4 "T" brace. 80% length of web member. Same species & grade or better, attached with 16d Box or Gun (0.135"x3.5",min.)nails @ 6" OC.

WARNING: Furnish a copy of this DWG to the installation contractor. Special care must be taken during handling, shipping and installation of trusses. See "WARNING" note below.

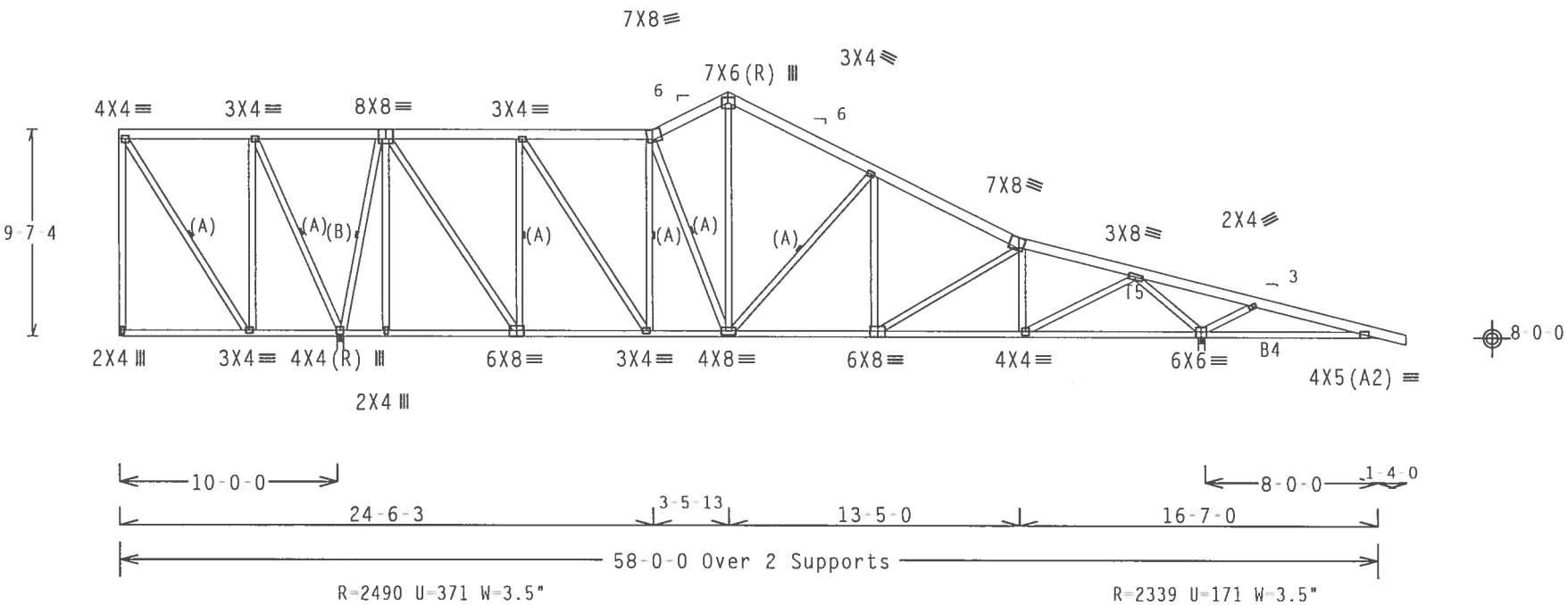

Design Crit: TPI-2002(STD)/FBC

PLT TYP. Wave Cq/RT=1.00(1.25)/0(0) 7.38.0810 QTY:1 FL/-/5/-/-/R/- Scale =.125"/Ft.

ALPINE
ITW Building Components Group, Inc.
Haines City, FL 33844
FL Certificate of Authorization # 0 278

WARNING TRUSSES REQUIRE EXTREME CARE IN FABRICATION, HANDLING, SHIPPING, INSTALLING AND BRACING. REFER TO BCSI (BUILDING COMPONENT SAFETY INFORMATION), PUBLISHED BY TPI (TRUSS PLATE INSTITUTE, 218 NORTH LEE STREET, SUITE 312, ALEXANDRIA, VA, 22314) AND WTCA (WOOD TRUSS COUNCIL OF AMERICA, 6300 ENTERPRISE LANE, MADISON, WI 53719) FOR SAFETY PRACTICES PRIOR TO PERFORMING THESE FUNCTIONS. UNLESS OTHERWISE INDICATED TOP CHORD SHALL HAVE PROPERLY ATTACHED STRUCTURAL PANELS AND BOTTOM CHORD SHALL HAVE A PROPERLY ATTACHED RIGID CEILING.

IMPORTANTFURNISH A COPY OF THIS DESIGN TO THE INSTALLATION CONTRACTOR. ITW BCG, INC. SHALL NOT BE RESPONSIBLE FOR ANY DEVIATION FROM THIS DESIGN; ANY FAILURE TO BUILD THE TRUSS IN CONFORMANCE WITH TPI; OR FABRICATING, HANDLING, SHIPPING, INSTALLING & BRACING OF TRUSSES.
DESIGN CONFORMS WITH APPLICABLE PROVISIONS OF NDS (NATIONAL DESIGN SPEC. BY AF&PA) AND TPI. ITW BCG CONNECTOR PLATES ARE MADE OF 20/18/16GA (W,H/SS/K) ASTM A653 GRADE 40/60 (W, K/H,SS) GALV. STEEL. APPLY PLATES TO EACH FACE OF TRUSS AND, UNLESS OTHERWISE LOCATED ON THIS DESIGN, POSITION PER DRAWINGS 160A Z. ANY INSPECTION OF PLATES FOLLOWED BY (1) SHALL BE PER ANNEX A3 OF TPI1-2002 SEC.3. A SEAL ON THIS DRAWING INDICATES ACCEPTANCE OF PROFESSIONAL ENGINEERING RESPONSIBILITY SOLELY FOR THE TRUSS COMPONENT DESIGN SHOWN. THE SUITABILITY AND USE OF THIS COMPONENT FOR ANY BUILDING IS THE RESPONSIBILITY OF THE BUILDING DESIGNER PER ANSI/TPI 1 SEC. 2.

JAMES F. COLLINS LICENSE No.52212 STATE OF FLORIDA PROFESSIONAL ENGINEER
Dec 17, 07

TC LL	20.0 PSF	REF R215-- 96001
TC DL	10.0 PSF	DATE 12/17/07
BC DL	10.0 PSF	DRW HCUSR215 07351028
BC LL	0.0 PSF	HC-ENG WHK/WHK
TOT.LD.	40.0 PSF	SEQN- 89516
DUR.FAC.	1.25	FROM LRB
SPACING	24.0"	JREF- 1TDD215_Z02

(4909-/THERESA BARBALE /OWNER BUILDER -- , ** - A6)

THIS DWG PREPARED FROM COMPUTER INPUT (LOADS & DIMENSIONS) SUBMITTED BY TRUSS MFR.

Top chord 2x6 SP #2 N
Bot chord 2x4 SP #2 N :B2 2x4 SP #2 Dense:
:B4 2x4 SP SS:
Webs 2x4 SP #2 N

Left end vertical not exposed to wind pressure.

(A) Continuous lateral bracing equally spaced on member. Or 1x4 "T" brace. 80% length of web member. Same species & grade or better, attached with 8d Box or Gun (0.113"x2.5",min.)nails @ 6" OC.

Deflection meets L/240 live and L/180 total load.

The overall height of this truss excluding overhang is 11-4-3.

110 mph wind, 15.00 ft mean hgt, ASCE 7-02, CLOSED bldg, not located within 6.50 ft from roof edge, CAT II, EXP B, wind TC DL=5.0 psf, wind BC DL=5.0 psf. Iw=1.00 GCpi(+/-)=0.18

Wind reactions based on MWFRS pressures.

Max JT VERT DEFL: LL: 0.34" DL: 0.35" recommended camber 5/8"

(B) Continuous lateral bracing equally spaced on member. Or 2x4 "T" brace. 80% length of web member. Same species & grade or better, attached with 16d Box or Gun (0.135"x3.5",min.)nails @ 6" OC.

WARNING: Furnish a copy of this DWG to the installation contractor. Special care must be taken during handling, shipping and installation of trusses. See "WARNING" note below.

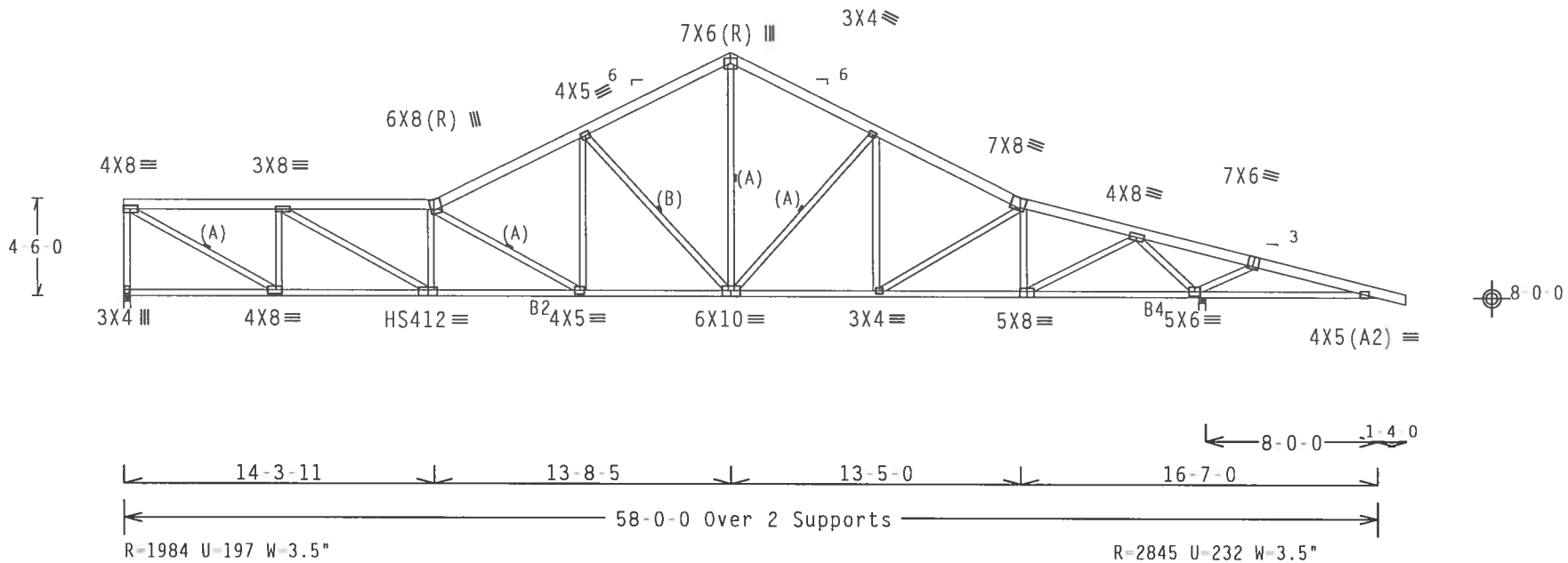

Design Crit: TPI-2002(STD)/FBC

PLT TYP. 20 Gauge HS,Wave Cq/RT=1.00(1.25)/0(0) 7.38.0810 QTY:1 FL/-/5/-/-/R/- Scale =.125"/Ft.

ALPINE
ITW Building Components Group, Inc.
Haines City, FL 33844
FL Certificate of Authorization # 0 278

WARNING TRUSSES REQUIRE EXTREME CARE IN FABRICATION, HANDLING, SHIPPING, INSTALLING AND BRACING. REFER TO BCSI (BUILDING COMPONENT SAFETY INFORMATION), PUBLISHED BY TPI (TRUSS PLATE INSTITUTE, 218 NORTH LEE STREET, SUITE 312, ALEXANDRIA, VA. 22314) AND WTCA (WOOD TRUSS COUNCIL OF AMERICA, 6300 ENTERPRISE LANE, MADISON, WI 53719) FOR SAFETY PRACTICES PRIOR TO PERFORMING THESE FUNCTIONS. UNLESS OTHERWISE INDICATED TOP CHORD SHALL HAVE PROPERLY ATTACHED STRUCTURAL PANELS AND BOTTOM CHORD SHALL HAVE A PROPERLY ATTACHED RIGID CEILING.

IMPORTANTFURNISH A COPY OF THIS DESIGN TO THE INSTALLATION CONTRACTOR. ITW BCG, INC. SHALL NOT BE RESPONSIBLE FOR ANY DEVIATION FROM THIS DESIGN; ANY FAILURE TO BUILD THE TRUSS IN COMFORMANCE WITH TPI; OR FABRICATING, HANDLING, SHIPPING, INSTALLING & BRACING OF TRUSSES.
DESIGN CONFORMS WITH APPLICABLE PROVISIONS OF NDS (NATIONAL DESIGN SPEC. BY AF&PA) AND TPI. ITW BCG CONNECTOR PLATES ARE MADE OF 20/18/16GA (W,H/SS/K) ASTM A653 GRADE 40/60 (W, K/H,SS) GALV. STEEL. APPLY PLATES TO EACH FACE OF TRUSS AND, UNLESS OTHERWISE LOCATED ON THIS DESIGN, POSITION PER DRAWINGS 160A Z. ANY INSPECTION OF PLATES FOLLOWED BY (1) SHALL BE PER ANNEX A3 OF TPI1-2002 SEC.3. A SEAL ON THIS DRAWING INDICATES ACCEPTANCE OF PROFESSIONAL ENGINEERING RESPONSIBILITY SOLELY FOR THE TRUSS COMPONENT DESIGN SHOWN. THE SUITABILITY AND USE OF THIS COMPONENT FOR ANY BUILDING IS THE RESPONSIBILITY OF THE BUILDING DESIGNER PER ANSI/TPI 1 SEC. 2.

JAMES F. COLLINS JR. LICENSE No. 52212 STATE OF FLORIDA PROFESSIONAL ENGINEER
Dec 17, 07

TC LL	20.0 PSF	REF	R215-- 96002
TC DL	10.0 PSF	DATE	12/17/07
BC DL	10.0 PSF	DRW	HCUSR215 07351029
BC LL	0.0 PSF	HC-ENG	WHK/WHK
TOT.LD.	40.0 PSF	SEQN-	89413
DUR.FAC.	1.25	FROM	LRB
SPACING	24.0"	JREF-	1TDD215_Z02

(4909-/THERESA BARBALE /OWNER BUILDER -- , ** - A7)

THIS DWG PREPARED FROM COMPUTER INPUT (LOADS & DIMENSIONS) SUBMITTED BY TRUSS MFR.

Top chord 2x6 SP #2 N
Bot chord 2x4 SP SS :B2, B3 2x4 SP #2 N:
Webs 2x4 SP #2 N

(A) Continuous lateral bracing equally spaced on member. Or 1x4 "T" brace. 80% length of web member. Same species & grade or better, attached with 8d Box or Gun (0.113"x2.5",min.)nails @ 6" OC.

WARNING: Furnish a copy of this DWG to the installation contractor. Special care must be taken during handling, shipping and installation of trusses. See "WARNING" note below.

110 mph wind, 15.00 ft mean hgt, ASCE 7-02, CLOSED bldg, not located within 6.50 ft from roof edge, CAT II, EXP B, wind TC DL=5.0 psf, wind BC DL=5.0 psf. Iw=1.00 GCpi(+/-)=0.18

Wind reactions based on MWFRS pressures.

Deflection meets L/240 live and L/180 total load.

The overall height of this truss excluding overhang is 11-4-3.

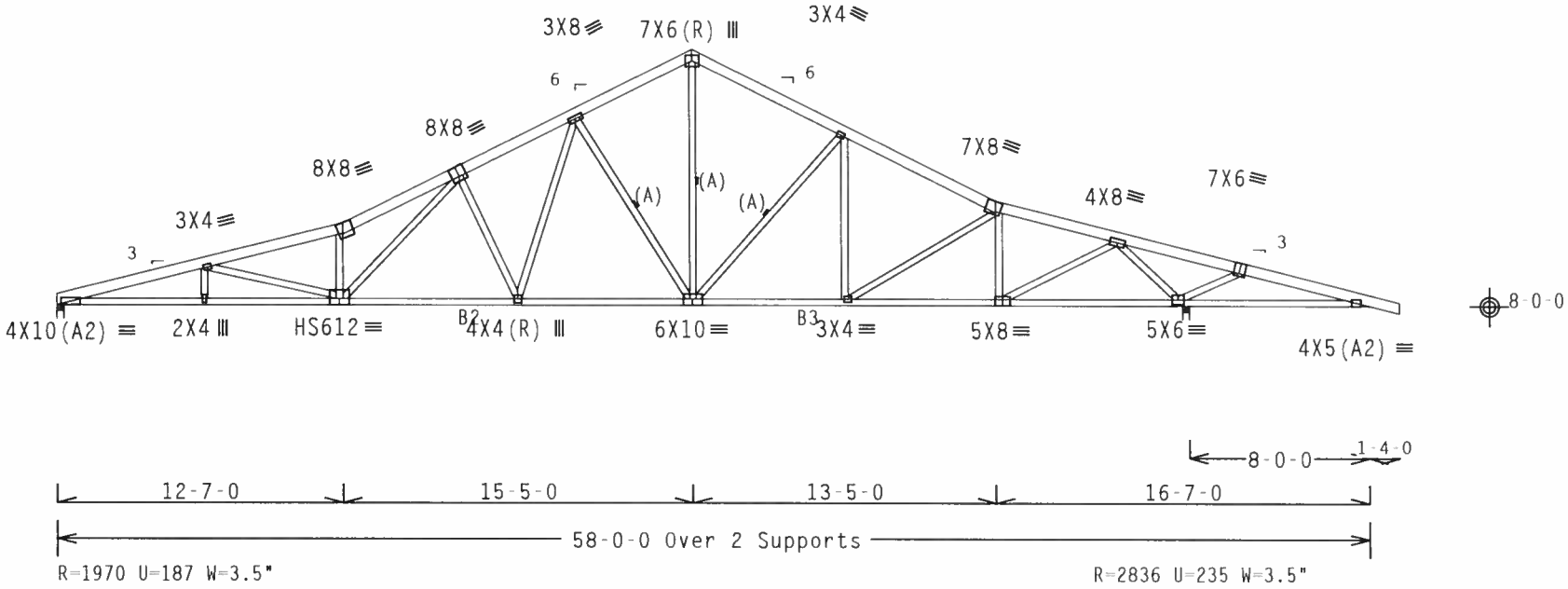

Design Crit: TPI-2002(STD)/FBC

PLT TYP. 20 Gauge HS,Wave Cq/RT=1.00(1.25)/0(0) 7.38.0810.02 QTY:1 FL/-/5/-/-/R/- Scale =.125"/Ft.

ALPINE
ITW Building Components Group, Inc.
Haines City, FL 33844
FL Certificate of Authorization # 0 278

WARNING TRUSSES REQUIRE EXTREME CARE IN FABRICATION, HANDLING, SHIPPING, INSTALLING AND BRACING. REFER TO BCSI (BUILDING COMPONENT SAFETY INFORMATION), PUBLISHED BY TPI (TRUSS PLATE INSTITUTE, 218 NORTH LEE STREET, SUITE 312, ALEXANDRIA, VA, 22314) AND WTCA (WOOD TRUSS COUNCIL OF AMERICA, 6300 ENTERPRISE LANE, MADISON, WI 53719) FOR SAFETY PRACTICES PRIOR TO PERFORMING THESE FUNCTIONS. UNLESS OTHERWISE INDICATED TOP CHORD SHALL HAVE PROPERLY ATTACHED STRUCTURAL PANELS AND BOTTOM CHORD SHALL HAVE A PROPERLY ATTACHED RIGID CEILING.

IMPORTANTFURNISH A COPY OF THIS DESIGN TO THE INSTALLATION CONTRACTOR. ITW BCG, INC. SHALL NOT BE RESPONSIBLE FOR ANY DEVIATION FROM THIS DESIGN; ANY FAILURE TO BUILD THE TRUSS IN CONFORMANCE WITH TPI; OR FABRICATING, HANDLING, SHIPPING, INSTALLING & BRACING OF TRUSSES. DESIGN CONFORMS WITH APPLICABLE PROVISIONS OF NDS (NATIONAL DESIGN SPEC. BY AF&PA) AND TPI. ITW BCG CONNECTOR PLATES ARE MADE OF 20/18/16GA (W,H/SS/K) ASTM A653 GRADE 40/60 (W, K/H,SS) GALV. STEEL. APPLY PLATES TO EACH FACE OF TRUSS AND, UNLESS OTHERWISE LOCATED ON THIS DESIGN, POSITION PER DRAWINGS 160A-Z. ANY INSPECTION OF PLATES FOLLOWED BY (1) SHALL BE PER ANNEX A3 OF TPI1-2002 SEC.3. A SEAL ON THIS DRAWING INDICATES ACCEPTANCE OF PROFESSIONAL ENGINEERING RESPONSIBILITY SOLELY FOR THE TRUSS COMPONENT DESIGN SHOWN. THE SUITABILITY AND USE OF THIS COMPONENT FOR ANY BUILDING IS THE RESPONSIBILITY OF THE BUILDING DESIGNER PER ANSI/TPI 1 SEC. 2.

JAMES F. COLLINS JR. LICENSE No. 52212 STATE OF FLORIDA PROFESSIONAL ENGINEER

Dec

TC LL	20.0 PSF	REF	R215-- 96003
TC DL	10.0 PSF	DATE	12/17/07
BC DL	10.0 PSF	DRW	HCUSR215 07351030
BC LL	0.0 PSF	HC-ENG	WHK/WHK
TOT.LD.	40.0 PSF	SEQN-	89399
DUR.FAC.	1.25	FROM	LRB
SPACING	24.0"	JREF-	1TDD215_Z02

(4909 /THERESA BARBALE /OWNER BUILDER -- , ** - A8)

Top chord 2x6 SP #2 N
Bot chord 2x4 SP SS :B2, B3 2x4 SP #2 N:
Webs 2x4 SP #2 N

(A) Continuous lateral bracing equally spaced on member. Or 1x4 "T" brace. 80% length of web member. Same species & grade or better, attached with 8d Box or Gun (0.113"x2.5",min.)nails @ 6" OC.

WARNING: Furnish a copy of this DWG to the installation contractor. Special care must be taken during handling, shipping and installation of trusses. See "WARNING" note below.

110 mph wind, 15.00 ft mean hgt, ASCE 7-02, CLOSED bldg, not located within 6.50 ft from roof edge, CAT II, EXP B, wind TC DL=5.0 psf, wind BC DL=5.0 psf. Iw=1.00 GCpi(+/-)=0.18

Wind reactions based on MWFRS pressures.

Deflection meets L/240 live and L/180 total load.

The overall height of this truss excluding overhang is 11-4-3.

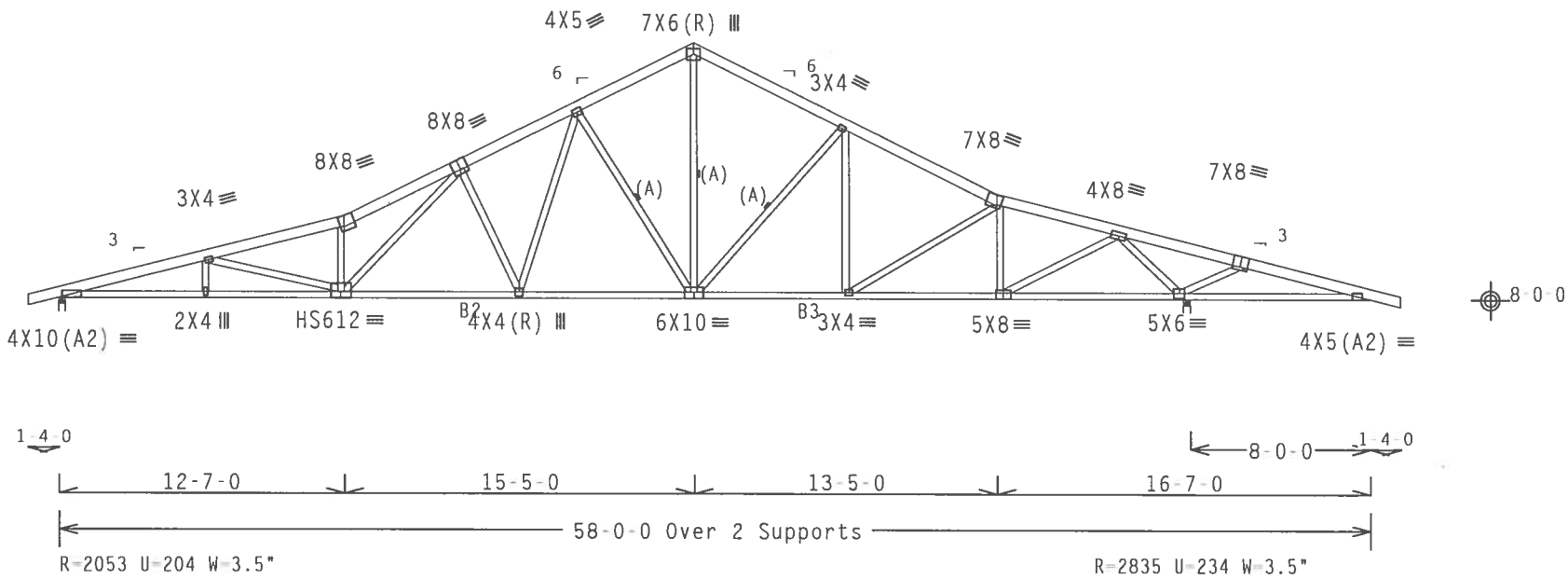

Design Crit: TPI-2002(STD)/FBC

PLT TYP. 20 Gauge HS,Wave Cq/RT=1.00(1.25)/0(0) 7.38.0810 QTY:4 FL/-/5/-/-/R/- Scale =.125"/Ft.

ALPINE
ITW Building Components Group, Inc.
Haines City, FL 33844
FL Certificate of Authorization # 0 278

WARNING TRUSSES REQUIRE EXTREME CARE IN FABRICATION, HANDLING, SHIPPING, INSTALLING AND BRACING. REFER TO BCSI (BUILDING COMPONENT SAFETY INFORMATION), PUBLISHED BY TPI (TRUSS PLATE INSTITUTE, 218 NORTH LEE STREET, SUITE 312, ALEXANDRIA, VA, 22314) AND WTCA (WOOD TRUSS COUNCIL OF AMERICA, 6300 ENTERPRISE LANE, MADISON, WI 53719) FOR SAFETY PRACTICES PRIOR TO PERFORMING THESE FUNCTIONS. UNLESS OTHERWISE INDICATED TOP CHORD SHALL HAVE PROPERLY ATTACHED STRUCTURAL PANELS AND BOTTOM CHORD SHALL HAVE A PROPERLY ATTACHED RIGID CEILING.

IMPORTANTFURNISH A COPY OF THIS DESIGN TO THE INSTALLATION CONTRACTOR. ITW BCG, INC. SHALL NOT BE RESPONSIBLE FOR ANY DEVIATION FROM THIS DESIGN; ANY FAILURE TO BUILD THE TRUSS IN CONFORMANCE WITH TPI; OR FABRICATING, HANDLING, SHIPPING, INSTALLING & BRACING OF TRUSSES. DESIGN CONFORMS WITH APPLICABLE PROVISIONS OF NDS (NATIONAL DESIGN SPEC. BY AF&PA) AND TPI. (ITW BCG CONNECTOR PLATES ARE MADE OF 20/18/16GA (W,H/SS/K) ASTM A653 GRADE 40/60 (W, K/H,SS) GALV. STEEL. APPLY PLATES TO EACH FACE OF TRUSS AND, UNLESS OTHERWISE LOCATED ON THIS DESIGN, POSITION PER DRAWINGS 160A & ANY INSPECTION OF PLATES FOLLOWED BY (1) SHALL BE PER ANNEX A3 OF TPI1 2002 SEC 3. A SEAL ON THIS DRAWING INDICATES ACCEPTANCE OF PROFESSIONAL ENGINEERING RESPONSIBILITY SOLELY FOR THE TRUSS COMPONENT DESIGN SHOWN. THE SUITABILITY AND USE OF THIS COMPONENT FOR ANY BUILDING IS THE RESPONSIBILITY OF THE BUILDING DESIGNER PER ANSI/TPI 1 SEC. 2.

JAMES F. COLLINS, JR. LICENSE No. 52212 STATE OF FLORIDA PROFESSIONAL ENGINEER
Dec 17 '07

TC LL	20.0 PSF	REF R215-- 96004
TC DL	10.0 PSF	DATE 12/17/07
BC DL	10.0 PSF	DRW HCUSR215 07351031
BC LL	0.0 PSF	HC-ENG WHK/WHK
TOT.LD.	40.0 PSF	SEQN- 89393
DUR.FAC.	1.25	FROM LRB
SPACING	24.0"	JREF- 1TDD215_Z02

THIS DWG PREPARED FROM COMPUTER INPUT (LOADS & DIMENSIONS) SUBMITTED BY TRUSS MFR.

Top chord 2x6 SP #2 N
Bot chord 2x4 SP #2 N :B5 2x4 SP #2 Dense:
Webs 2x4 SP #2 N

110 mph wind, 15.00 ft mean hgt, ASCE 7-02, CLOSED bldg, not located within 6.50 ft from roof edge, CAT II, EXP B, wind TC DL=5.0 psf, wind BC DL=5.0 psf. Iw=1.00 GCpi(+/-)=0.18

Calculated horizontal deflection is 0.27" due to live load and 0.28" due to dead load.

Deflection meets L/240 live and L/180 total load.

The overall height of this truss excluding overhang is 11-4-3.

Bearing blocks: Nail type: 0.131"x3" Gun nails

BRG	X-LOC	#BLOCKS	LENGTH/BLK	#NAILS/BLK	WALL PLATE
1	10.333'	1	12"	4	Rigid Surface

Bearing block to be same size and species as bottom chord.
Refer to drawing CNBRGBLK0207 for additional information.

Wind reactions based on MWFRS pressures.

(A) Continuous lateral bracing equally spaced on member. Or 2x4 "T" brace. 80% length of web member. Same species & grade or better, attached with 16d Box or Gun (0.135"x3.5",min.)nails @ 6" OC.

WARNING: Furnish a copy of this DWG to the installation contractor. Special care must be taken during handling, shipping and installation of trusses. See "WARNING" note below.

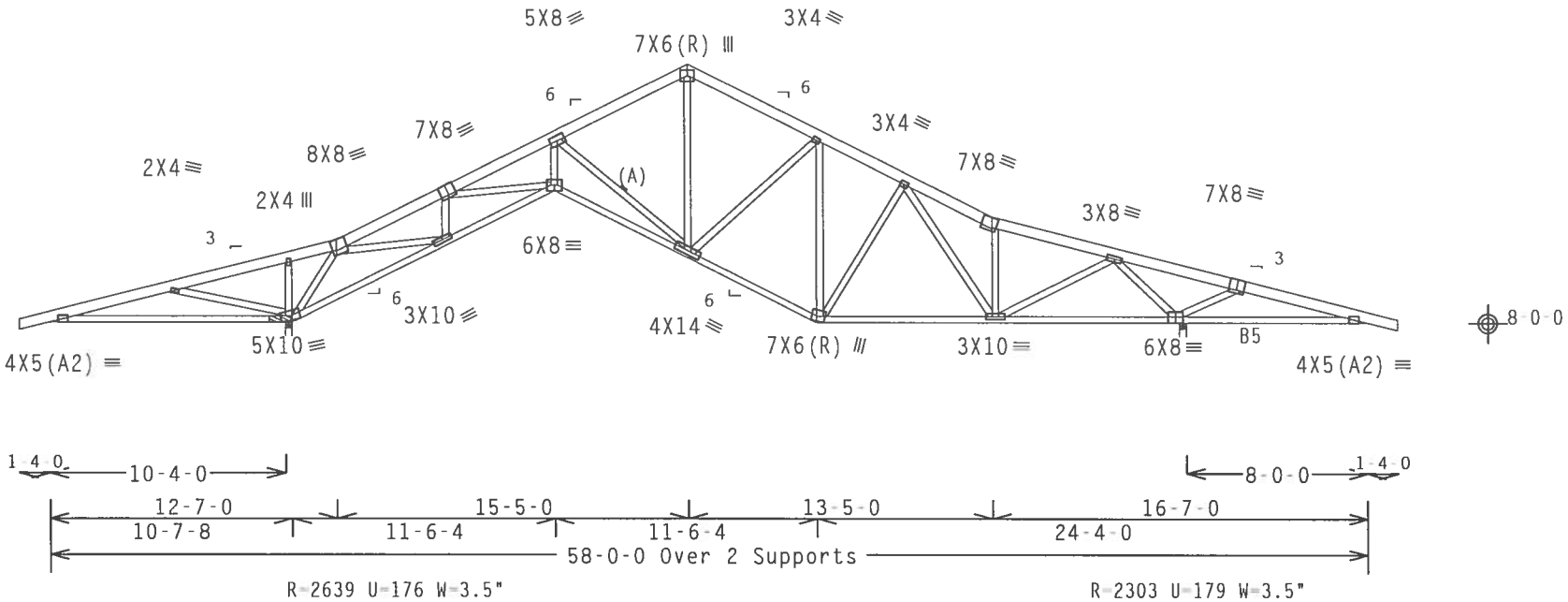

Design Crit: TPI-2002(STD)/FBC

PLT TYP. Wave | Cq/RT=1.00(1.25)/0(0) | 7.38.0810-02 | QTY:9 | FL/-/5/-/-/R/- | Scale =.125"/Ft.

ALPINE
ITW Building Components Group, Inc.
Haines City, FL 33844
FL Certificate of Authorization # 0 278

WARNING TRUSSES REQUIRE EXTREME CARE IN FABRICATION, HANDLING, SHIPPING, INSTALLING AND BRACING. REFER TO BCSI (BUILDING COMPONENT SAFETY INFORMATION), PUBLISHED BY TPI (TRUSS PLATE INSTITUTE, 218 NORTH LEE STREET, SUITE 312, ALEXANDRIA, VA, 22314) AND WTCA (WOOD TRUSS COUNCIL OF AMERICA, 6300 ENTERPRISE LANE, MADISON, WI 53719) FOR SAFETY PRACTICES PRIOR TO PERFORMING THESE FUNCTIONS. UNLESS OTHERWISE INDICATED TOP CHORD SHALL HAVE PROPERLY ATTACHED STRUCTURAL PANELS AND BOTTOM CHORD SHALL HAVE A PROPERLY ATTACHED RIGID CEILING.

IMPORTANTFURNISH A COPY OF THIS DESIGN TO THE INSTALLATION CONTRACTOR. ITW BCG, INC. SHALL NOT BE RESPONSIBLE FOR ANY DEVIATION FROM THIS DESIGN; ANY FAILURE TO BUILD THE TRUSS IN CONFORMANCE WITH TPI; OR FABRICATING, HANDLING, SHIPPING, INSTALLING & BRACING OF TRUSSES.
DESIGN CONFORMS WITH APPLICABLE PROVISIONS OF NDS (NATIONAL DESIGN SPEC. BY AF&PA) AND TPI. ITW BCG CONNECTOR PLATES ARE MADE OF 20/18/16GA (W,H/SS/K) ASTM A653 GRADE 40/60 (H, K/H,SS) GALV. STEEL. APPLY PLATES TO EACH FACE OF TRUSS AND, UNLESS OTHERWISE LOCATED ON THIS DESIGN, POSITION PER DRAWINGS 160A-Z. ANY INSPECTION OF PLATES FOLLOWED BY (1) SHALL BE PER ANNEX A3 OF TPI1-2002 SEC.3. A SEAL ON THIS DRAWING INDICATES ACCEPTANCE OF PROFESSIONAL ENGINEERING RESPONSIBILITY SOLELY FOR THE TRUSS COMPONENT DESIGN SHOWN. THE SUITABILITY AND USE OF THIS COMPONENT FOR ANY BUILDING IS THE RESPONSIBILITY OF THE BUILDING DESIGNER PER ANSI/TPI 1 SEC. 2.

JAMES F. COLLINS JR. LICENSE No. 52212 STATE OF FLORIDA PROFESSIONAL ENGINEER
Dec 17 07

TC LL	20.0 PSF	REF R215-- 96005
TC DL	10.0 PSF	DATE 12/17/07
BC DL	10.0 PSF	DRW HCUSR215 07351032
BC LL	0.0 PSF	HC-ENG WHK/WHK
TOT.LD.	40.0 PSF	SEQN- 89379
DUR.FAC.	1.25	FROM LRB
SPACING	24.0"	JREF- 1TDD215_Z02

THIS DWG PREPARED FROM COMPUTER INPUT (LOADS & DIMENSIONS) SUBMITTED BY TRUSS MFR.

Top chord 2x6 SP #2 N
Bot chord 2x4 SP #2 N :B2, B3 2x6 SP #2 N:
:B5 2x4 SP #2 Dense:
Webs 2x4 SP #2 N

Calculated horizontal deflection is 0.30" due to live load and 0.31" due to dead load.

Deflection meets L/240 live and L/180 total load.

WARNING: Furnish a copy of this DWG to the installation contractor. Special care must be taken during handling, shipping and installation of trusses. See "WARNING" note below.

110 mph wind, 15.00 ft mean hgt, ASCE 7-02, CLOSED bldg, not located within 6.50 ft from roof edge, CAT II, EXP B, wind TC DL=5.0 psf, wind BC DL=5.0 psf. Iw=1.00 GCpi(+/-)=0.18

Wind reactions based on MWFRS pressures.

(A) Continuous lateral bracing equally spaced on member. Or 1x4 "T" brace. 80% length of web member. Same species & grade or better, attached with 8d Box or Gun (0.113"x2.5",min.)nails @ 6" OC.

The overall height of this truss excluding overhang is 11-4-3.

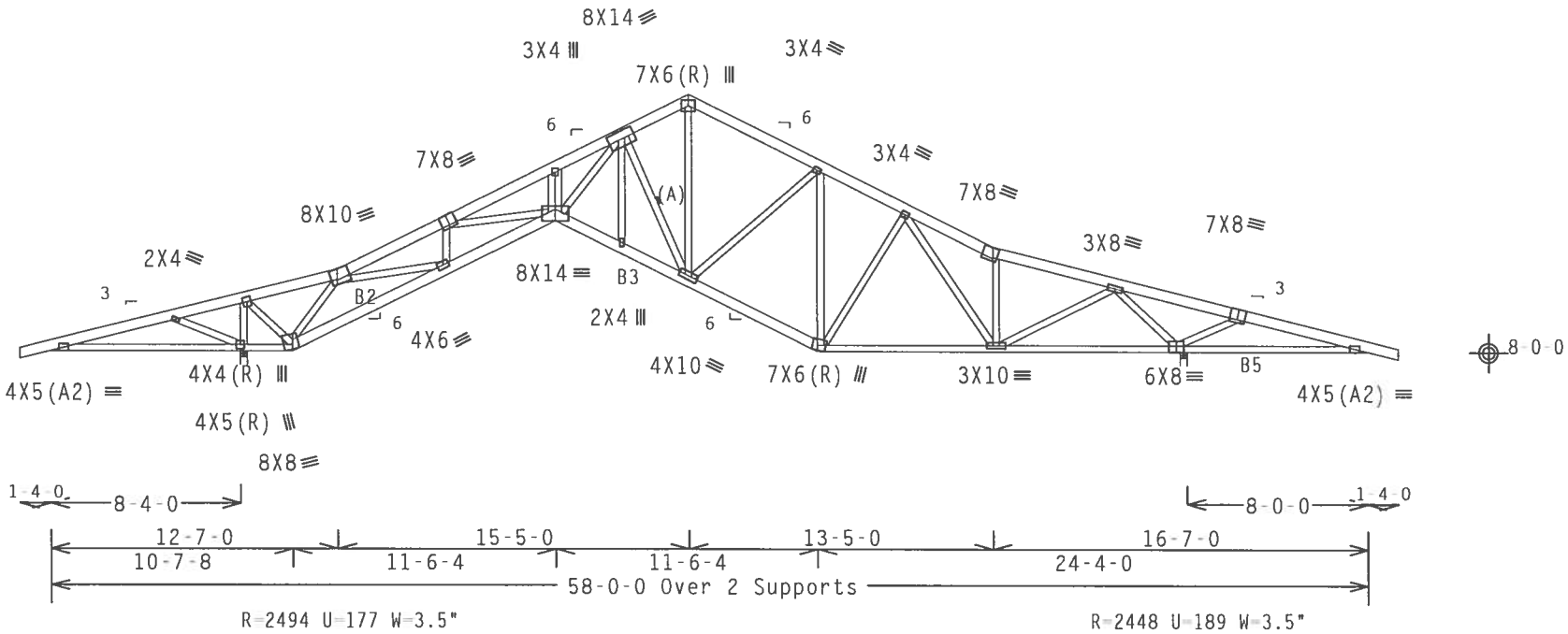

Design Crit: TPI-2002(STD)/FBC

PLT TYP. Wave | Cq/RT=1.00(1.25)/0(0) | 7.38.0810.02 | QTY:3 | FL/-/5/-/-/R/- | Scale =.125"/Ft.

ALPINE
ITW Building Components Group, Inc.
Haines City, FL 33844
FL Certificate of Authorization # 0 278

WARNING TRUSSES REQUIRE EXTREME CARE IN FABRICATION, HANDLING, SHIPPING, INSTALLING AND BRACING. REFER TO BCSI (BUILDING COMPONENT SAFETY INFORMATION), PUBLISHED BY TPI (TRUSS PLATE INSTITUTE, 218 NORTH LEE STREET, SUITE 312, ALEXANDRIA, VA, 22314) AND WTCA (WOOD TRUSS COUNCIL OF AMERICA, 6300 ENTERPRISE LANE, MADISON, WI 53719) FOR SAFETY PRACTICES PRIOR TO PERFORMING THESE FUNCTIONS. UNLESS OTHERWISE INDICATED TOP CHORD SHALL HAVE PROPERLY ATTACHED STRUCTURAL PANELS AND BOTTOM CHORD SHALL HAVE A PROPERLY ATTACHED RIGID CEILING.

IMPORTANTFURNISH A COPY OF THIS DESIGN TO THE INSTALLATION CONTRACTOR. ITW BCG, INC. SHALL NOT BE RESPONSIBLE FOR ANY DEVIATION FROM THIS DESIGN; ANY FAILURE TO BUILD THE TRUSS IN CONFORMANCE WITH TPI; OR FABRICATING, HANDLING, SHIPPING, INSTALLING & BRACING OF TRUSSES.
DESIGN CONFORMS WITH APPLICABLE PROVISIONS OF NDS (NATIONAL DESIGN SPEC. BY AF&PA) AND TPI. ITW BCG CONNECTOR PLATES ARE MADE OF 20/18/16GA (W,H/SS/K) ASTM A653 GRADE 40/60 (W, K/H,SS) GALV. STEEL. APPLY PLATES TO EACH FACE OF TRUSS AND, UNLESS OTHERWISE LOCATED ON THIS DESIGN, POSITION PER DRAWINGS 160A-Z. ANY INSPECTION OF PLATES FOLLOWED BY (1) SHALL BE PER ANNEX A3 OF TPI1-2002 SEC.3. A SEAL ON THIS DRAWING INDICATES ACCEPTANCE OF PROFESSIONAL ENGINEERING RESPONSIBILITY SOLELY FOR THE TRUSS COMPONENT DESIGN SHOWN. THE SUITABILITY AND USE OF THIS COMPONENT FOR ANY BUILDING IS THE RESPONSIBILITY OF THE BUILDING DESIGNER PER ANSI/TPI 1 SEC. 2.

JAMES F. COLLINS JR. LICENSE No. 52212 STATE OF FLORIDA PROFESSIONAL ENGINEER
Dec

TC LL	20.0 PSF	REF	R215-- 96006
TC DL	10.0 PSF	DATE	12/17/07
BC DL	10.0 PSF	DRW	HCUSR215 07351033
BC LL	0.0 PSF	HC-ENG	WHK/WHK
TOT.LD.	40.0 PSF	SEQN-	89387
DUR.FAC.	1.25	FROM	LRB
SPACING	24.0"	JREF-	1TDD215_Z02

THIS DWG PREPARED FROM COMPUTER INPUT (LOADS & DIMENSIONS) SUBMITTED BY TRUSS MFR.

Top chord 2x6 SP #2 N
Bot chord 2x4 SP #2 N :B4 2x4 SP SS:
Webs 2x4 SP #2 N

(A) Continuous lateral bracing equally spaced on member. Or 1x4 "T" brace. 80% length of web member. Same species & grade or better, attached with 8d Box or Gun (0.113"x2.5",min.)nails @ 6" OC.

WARNING: Furnish a copy of this DWG to the installation contractor. Special care must be taken during handling, shipping and installation of trusses. See "WARNING" note below.

110 mph wind, 15.00 ft mean hgt, ASCE 7-02, CLOSED bldg, Located anywhere in roof, CAT II, EXP B, wind TC DL=5.0 psf, wind BC DL=5.0 psf. Iw=1.00 GCpi(+/-)=0.18

Wind reactions based on MWFRS pressures.

Deflection meets L/240 live and L/180 total load.

The overall height of this truss excluding overhang is 11-4-3.

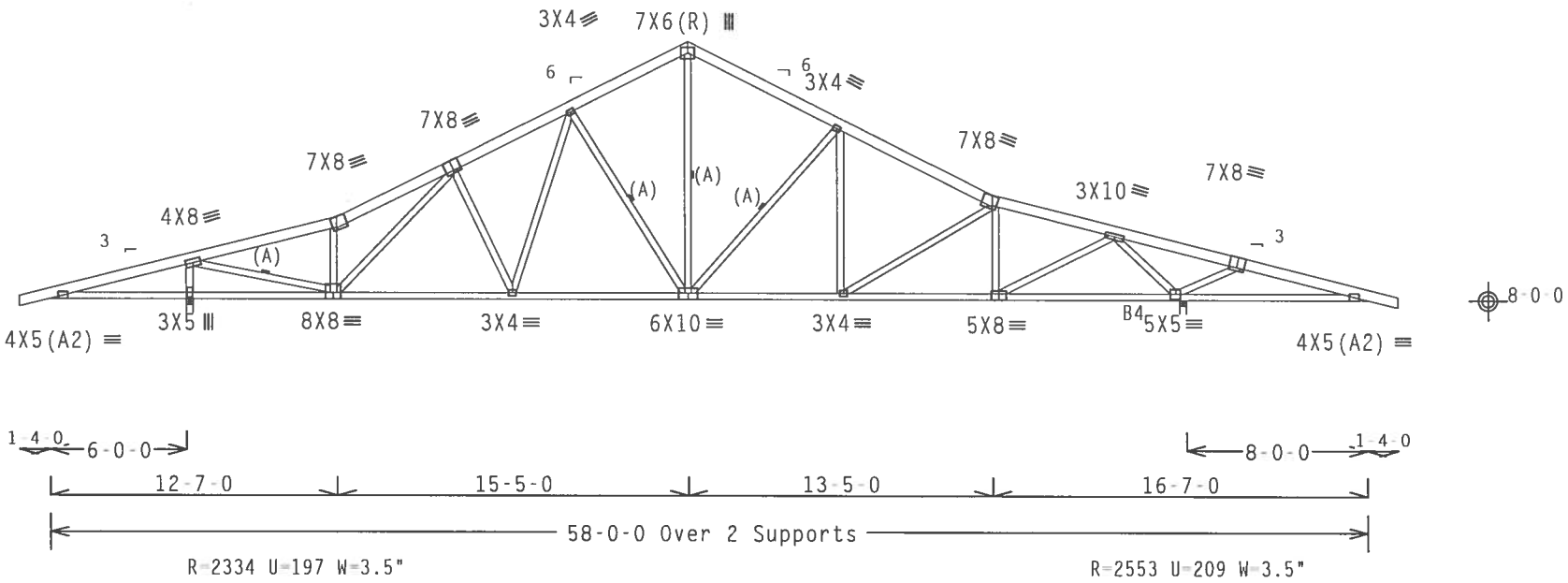

Design Crit: TPI-2002(STD)/FBC

PLT TYP. Wave Cq/RT=1.00(1.25)/0(0) 7.38.0810 QTY:6 FL/-/5/-/-/R/- Scale =.125"/Ft.

ALPINE
ITW Building Components Group, Inc.
Haines City, FL 33844
FL Certificate of Authorization # 0 278

WARNING TRUSSES REQUIRE EXTREME CARE IN FABRICATION, HANDLING, SHIPPING, INSTALLING AND BRACING. REFER TO BCSI (BUILDING COMPONENT SAFETY INFORMATION), PUBLISHED BY TPI (TRUSS PLATE INSTITUTE, 218 NORTH LEE STREET, SUITE 312, ALEXANDRIA, VA, 22314) AND WTCA (WOOD TRUSS COUNCIL OF AMERICA, 6300 ENTERPRISE LANE, MADISON, WI 53719) FOR SAFETY PRACTICES PRIOR TO PERFORMING THESE FUNCTIONS. UNLESS OTHERWISE INDICATED TOP CHORD SHALL HAVE PROPERLY ATTACHED STRUCTURAL PANELS AND BOTTOM CHORD SHALL HAVE A PROPERLY ATTACHED RIGID CEILING.

IMPORTANTFURNISH A COPY OF THIS DESIGN TO THE INSTALLATION CONTRACTOR. ITW BCG, INC. SHALL NOT BE RESPONSIBLE FOR ANY DEVIATION FROM THIS DESIGN; ANY FAILURE TO BUILD THE TRUSS IN CONFORMANCE WITH TPI; OR FABRICATING, HANDLING, SHIPPING, INSTALLING & BRACING OF TRUSSES.
DESIGN CONFORMS WITH APPLICABLE PROVISIONS OF NDS (NATIONAL DESIGN SPEC. BY AF&PA) AND TPI. ITW BCG CONNECTOR PLATES ARE MADE OF 20/18/16GA (W,H/SS/K) ASTM A653 GRADE 40/60 (W, K/H,SS) GALV. STEEL. APPLY PLATES TO EACH FACE OF TRUSS AND, UNLESS OTHERWISE LOCATED ON THIS DESIGN, POSITION PER DRAWINGS 160A-Z. ANY INSPECTION OF PLATES FOLLOWED BY (I) SHALL BE PER ANNEX A3 OF TPI1-2002 SEC.3. A SEAL ON THIS DRAWING INDICATES ACCEPTANCE OF PROFESSIONAL ENGINEERING RESPONSIBILITY SOLELY FOR THE TRUSS COMPONENT DESIGN SHOWN. THE SUITABILITY AND USE OF THIS COMPONENT FOR ANY BUILDING IS THE RESPONSIBILITY OF THE BUILDING DESIGNER PER ANSI/TPI 1 SEC. 2.

JAMES F. COLLINS LICENSE No. 52212 STATE OF FLORIDA PROFESSIONAL ENGINEER
Dec 17 07

TC LL	20.0 PSF	REF R215-- 96007
TC DL	10.0 PSF	DATE 12/17/07
BC DL	10.0 PSF	DRW HCUSR215 07351034
BC LL	0.0 PSF	HC-ENG WHK/WHK
TOT.LD.	40.0 PSF	SEQN- 89373
DUR.FAC.	1.25	FROM LRB
SPACING	24.0"	JREF- 1TDD215_Z02

(4909-/THERESA BARBALE /OWNER BUILDER -- , ** - A12)

Top chord 2x4 SP #2 N
Bot chord 2x4 SP #2 N :B3 2x4 SP SS:
Webs 2x4 SP #2 N

Left end vertical not exposed to wind pressure.

(A) scab brace. 80% length of web member. Same size, species & grade or better. Attach with 10d Box or Gun (0.128"x3",min.)nails @ 6" OC.

The overall height of this truss excluding overhang is 11-4-3.

110 mph wind, 15.00 ft mean hgt, ASCE 7-02, CLOSED bldg, not located within 6.50 ft from roof edge, CAT II, EXP B, wind TC DL=5.0 psf, wind BC DL=5.0 psf. Iw=1.00 GCpi(+/-)=0.18

Wind reactions based on MWFRS pressures.

Deflection meets L/240 live and L/180 total load.

WARNING: Furnish a copy of this DWG to the installation contractor. Special care must be taken during handling, shipping and installation of trusses. See "WARNING" note below.

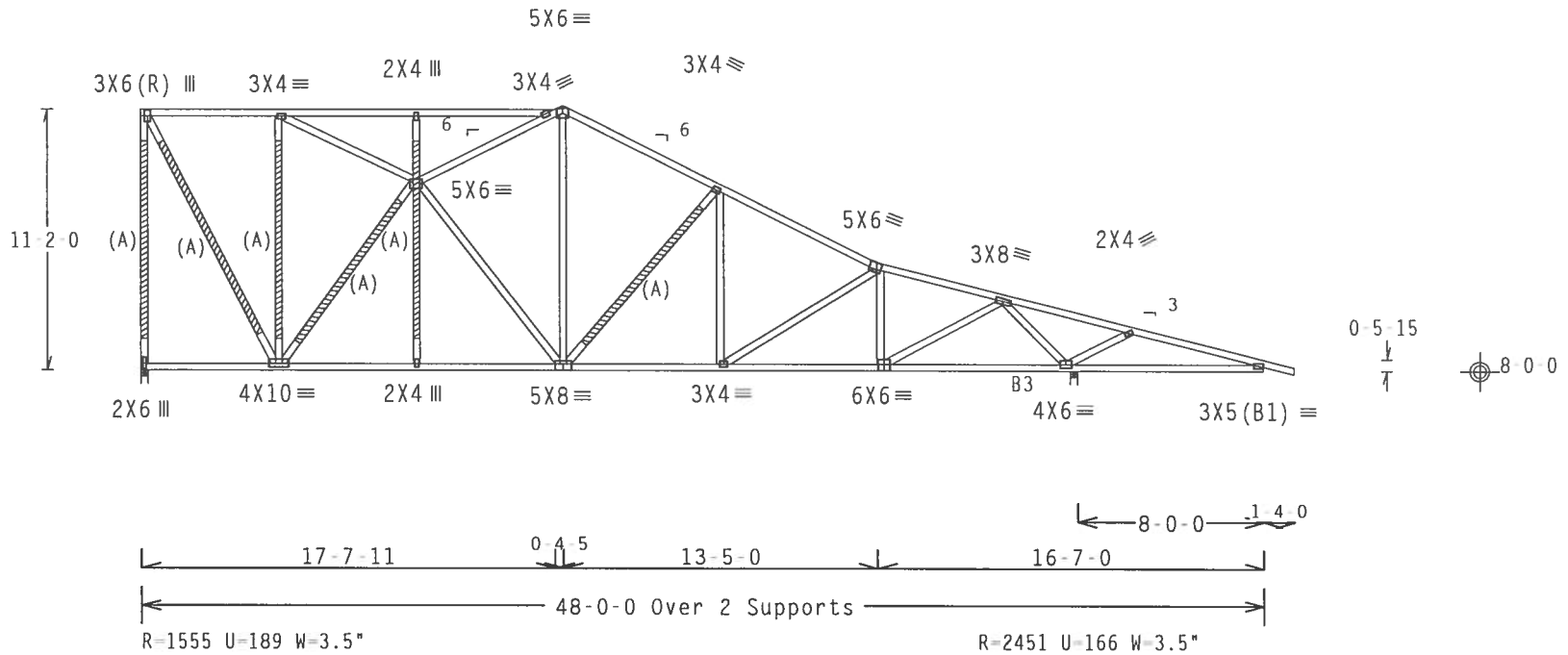

Design Crit: TPI-2002(STD)/FBC

PLT TYP. Wave | Cq/RT=1.00(1.25)/0(0) | 7.38.0810.02 | QTY:1 | FL/-/5/-/-/R/- | Scale =.125"/Ft.

ALPINE
ITW Building Components Group, Inc.
Haines City, FL 33844
FL Certificate of Authorization # 0 278

WARNING TRUSSES REQUIRE EXTREME CARE IN FABRICATION, HANDLING, SHIPPING, INSTALLING AND BRACING. REFER TO BCSI (BUILDING COMPONENT SAFETY INFORMATION), PUBLISHED BY TPI (TRUSS PLATE INSTITUTE, 218 NORTH LEE STREET, SUITE 312, ALEXANDRIA, VA, 22314) AND WTCA (WOOD TRUSS COUNCIL OF AMERICA, 6300 ENTERPRISE LANE, MADISON, WI 53719) FOR SAFETY PRACTICES PRIOR TO PERFORMING THESE FUNCTIONS. UNLESS OTHERWISE INDICATED TOP CHORD SHALL HAVE PROPERLY ATTACHED STRUCTURAL PANELS AND BOTTOM CHORD SHALL HAVE A PROPERLY ATTACHED RIGID CEILING.

IMPORTANTFURNISH A COPY OF THIS DESIGN TO THE INSTALLATION CONTRACTOR. ITW BCG, INC. SHALL NOT BE RESPONSIBLE FOR ANY DEVIATION FROM THIS DESIGN; ANY FAILURE TO BUILD THE TRUSS IN CONFORMANCE WITH TPI; OR FABRICATING, HANDLING, SHIPPING, INSTALLING & BRACING OF TRUSSES.
DESIGN CONFORMS WITH APPLICABLE PROVISIONS OF NDS (NATIONAL DESIGN SPEC. BY AF&PA) AND TPI. ITW BCG CONNECTOR PLATES ARE MADE OF 20/18/16GA (W,H/SS/K) ASTM A653 GRADE 40/60 (W, K/H,SS) GALV. STEEL. APPLY PLATES TO EACH FACE OF TRUSS AND, UNLESS OTHERWISE LOCATED ON THIS DESIGN, POSITION PER DRAWINGS 160A-Z. ANY INSPECTION OF PLATES FOLLOWED BY (I) SHALL BE PER ANNEX A3 OF TPI1-2002 SEC.3. A SEAL ON THIS DRAWING INDICATES ACCEPTANCE OF PROFESSIONAL ENGINEERING RESPONSIBILITY SOLELY FOR THE TRUSS COMPONENT DESIGN SHOWN. THE SUITABILITY AND USE OF THIS COMPONENT FOR ANY BUILDING IS THE RESPONSIBILITY OF THE BUILDING DESIGNER PER ANSI/TPI 1 SEC. 2.

JAMES F. COLLINS, JR. LICENSE No. 52212 STATE OF FLORIDA PROFESSIONAL ENGINEER
Dec

TC LL	20.0 PSF	REF	R215-- 96008
TC DL	10.0 PSF	DATE	12/17/07
BC DL	10.0 PSF	DRW	HCUSR215 07351035
BC LL	0.0 PSF	HC-ENG	WHK/WHK
TOT.LD.	40.0 PSF	SEQN-	89441
DUR.FAC.	1.25	FROM	LRB
SPACING	24.0"	JREF-	1TDD215_Z02

(4909 /THERESA BARBALE /OWNER BUILDER -- , ** - A13)

THIS DWG PREPARED FROM COMPUTER INPUT (LOADS & DIMENSIONS) SUBMITTED BY TRUSS MFR.

Top chord 2x4 SP #2 N
Bot chord 2x4 SP #2 N :B3 2x4 SP SS:
Webs 2x4 SP #2 N

Left end vertical not exposed to wind pressure.

(A) Continuous lateral bracing equally spaced on member. Or 1x4 "T" brace. 80% length of web member. Same species & grade or better, attached with 8d Box or Gun (0.113"x2.5",min.)nails @ 6" OC.

The overall height of this truss excluding overhang is 11-4-3.

110 mph wind, 15.00 ft mean hgt, ASCE 7-02, CLOSED bldg, not located within 6.50 ft from roof edge, CAT II, EXP B, wind TC DL=5.0 psf, wind BC DL=5.0 psf. Iw=1.00 GCpi(+/-)=0.18

Wind reactions based on MWFRS pressures.

Deflection meets L/240 live and L/180 total load.

WARNING: Furnish a copy of this DWG to the installation contractor. Special care must be taken during handling, shipping and installation of trusses. See "WARNING" note below.

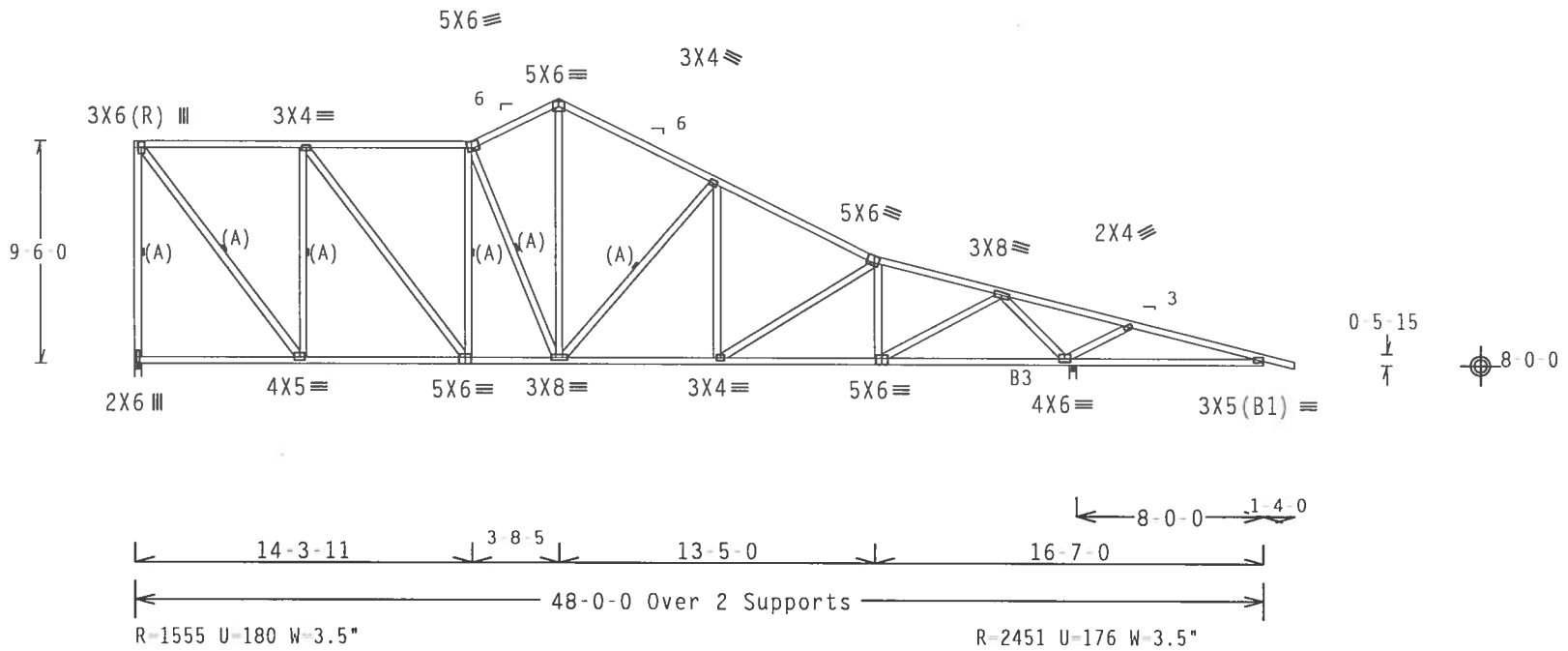

Design Crit: TPI-2002(STD)/FBC

PLT TYP. Wave Cq/RT=1.00(1.25)/0(0) 7.38.0810.82 QTY:1 FL/-/5/-/-/R/- Scale =.125"/Ft.

ALPINE
ITW Building Components Group, Inc.
Haines City, FL 33844
FL Certificate of Authorization # 0 278

WARNING TRUSSES REQUIRE EXTREME CARE IN FABRICATION, HANDLING, SHIPPING, INSTALLING AND BRACING. REFER TO BCSI (BUILDING COMPONENT SAFETY INFORMATION), PUBLISHED BY TPI (TRUSS PLATE INSTITUTE, 218 NORTH LEE STREET, SUITE 312, ALEXANDRIA, VA, 22314) AND WTCA (WOOD TRUSS COUNCIL OF AMERICA, 6300 ENTERPRISE LANE, MADISON, WI 53719) FOR SAFETY PRACTICES PRIOR TO PERFORMING THESE FUNCTIONS. UNLESS OTHERWISE INDICATED TOP CHORD SHALL HAVE PROPERLY ATTACHED STRUCTURAL PANELS AND BOTTOM CHORD SHALL HAVE A PROPERLY ATTACHED RIGID CEILING.

IMPORTANTFURNISH A COPY OF THIS DESIGN TO THE INSTALLATION CONTRACTOR. ITW BCG, INC. SHALL NOT BE RESPONSIBLE FOR ANY DEVIATION FROM THIS DESIGN; ANY FAILURE TO BUILD THE TRUSS IN CONFORMANCE WITH TPI; OR FABRICATING, HANDLING, SHIPPING, INSTALLING & BRACING OF TRUSSES.
DESIGN CONFORMS WITH APPLICABLE PROVISIONS OF NDS (NATIONAL DESIGN SPEC. BY AF&PA) AND TPI. ITW BCG CONNECTOR PLATES ARE MADE OF 20/18/16GA (W,H/SS/K) ASTM A653 GRADE 40/60 (W, K/H,SS) GALV. STEEL. APPLY PLATES TO EACH FACE OF TRUSS AND, UNLESS OTHERWISE LOCATED ON THIS DESIGN, POSITION PER DRAWINGS 160A-Z. ANY INSPECTION OF PLATES FOLLOWED BY (1) SHALL BE PER ANNEX A3 OF TPI1-2002 SEC.3. A SEAL ON THIS DRAWING INDICATES ACCEPTANCE OF PROFESSIONAL ENGINEERING RESPONSIBILITY SOLELY FOR THE TRUSS COMPONENT DESIGN SHOWN. THE SUITABILITY AND USE OF THIS COMPONENT FOR ANY BUILDING IS THE RESPONSIBILITY OF THE BUILDING DESIGNER PER ANSI/TPI 1 SEC. 2.

JAMES F. COLLINS JR. LICENSE No. 52211 STATE OF FLORIDA PROFESSIONAL ENGINEER
Dec 17-07

TC LL	20.0 PSF	REF	R215-- 96009
TC DL	10.0 PSF	DATE	12/17/07
BC DL	10.0 PSF	DRW	HCUSR215 07351020
BC LL	0.0 PSF	HC-ENG	WHK/WHK *
TOT.LD.	40.0 PSF	SEQN-	89431
DUR.FAC.	1.25	FROM	LRB
SPACING	24.0"	JREF-	1TDD215_Z02

(4909-/THERESA BARBALE /OWNER BUILDER -- , ** - A14)

THIS DWG PREPARED FROM COMPUTER INPUT (LOADS & DIMENSIONS) SUBMITTED BY TRUSS MFR.

Top chord 2x4 SP #2 N
Bot chord 2x4 SP #2 N :B3 2x4 SP SS:
Webs 2x4 SP #2 N

Left end vertical not exposed to wind pressure.

(A) Continuous lateral bracing equally spaced on member. Or 1x4 "T" brace. 80% length of web member. Same species & grade or better, attached with 8d Box or Gun (0.113"x2.5",min.)nails @ 6" OC.

The overall height of this truss excluding overhang is 11-4-3.

110 mph wind, 15.00 ft mean hgt, ASCE 7-02, CLOSED bldg, not located within 6.50 ft from roof edge, CAT II, EXP B, wind TC DL=5.0 psf, wind BC DL=5.0 psf. Iw=1.00 GCpi(+/-)=0.18

Wind reactions based on MWFRS pressures.

Deflection meets L/240 live and L/180 total load.

WARNING: Furnish a copy of this DWG to the installation contractor. Special care must be taken during handling, shipping and installation of trusses. See "WARNING" note below.

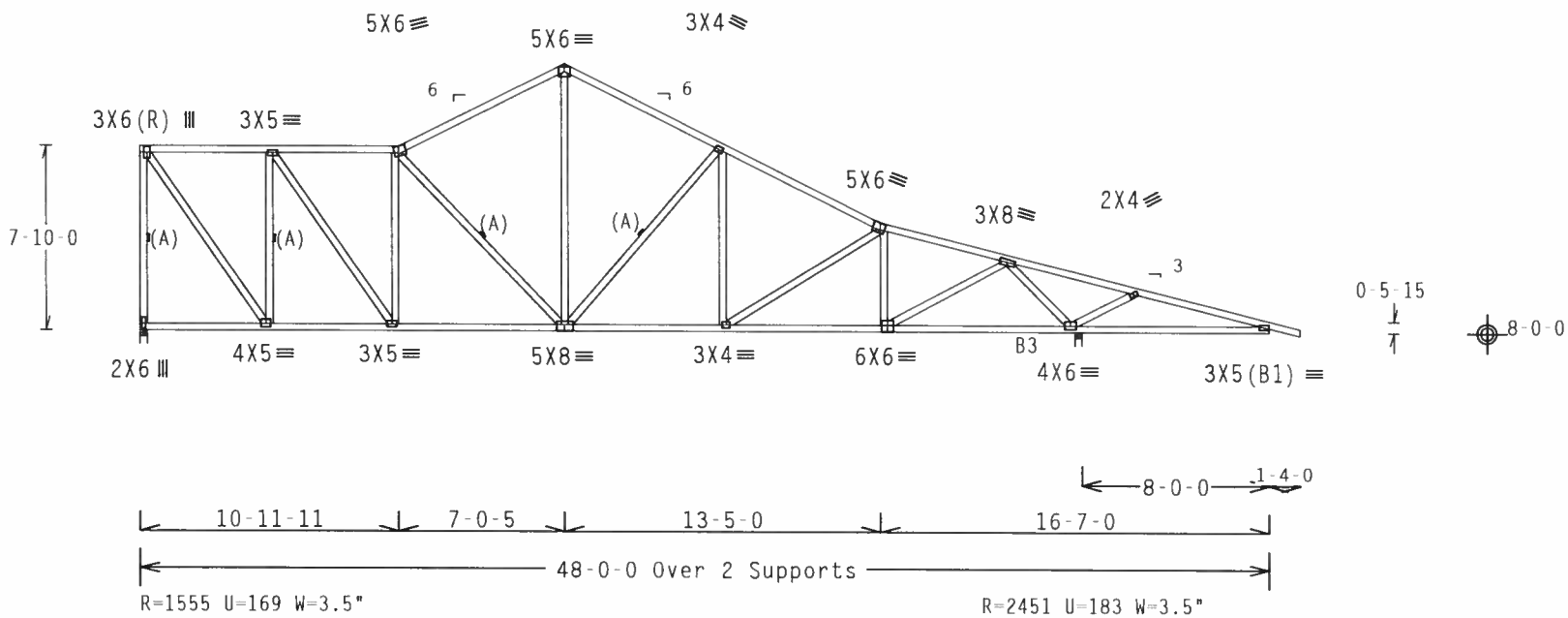

Design Crit: TPI-2002(STD)/FBC

PLT TYP. Wave Cq/RT=1.00(1.25)/0(0) 7.38.0810.0 QTY:1 FL/-/5/-/-/R/- Scale =.125"/Ft.

ALPINE
ITW Building Components Group, Inc.
Haines City, FL 33844
FL Certificate of Authorization # 0 278

WARNING TRUSSES REQUIRE EXTREME CARE IN FABRICATION, HANDLING, SHIPPING, INSTALLING AND BRACING. REFER TO BCSI (BUILDING COMPONENT SAFETY INFORMATION), PUBLISHED BY TPI (TRUSS PLATE INSTITUTE, 218 NORTH LEE STREET, SUITE 312, ALEXANDRIA, VA. 22314) AND WTCA (WOOD TRUSS COUNCIL OF AMERICA, 6300 ENTERPRISE LANE, MADISON, WI 53719) FOR SAFETY PRACTICES PRIOR TO PERFORMING THESE FUNCTIONS. UNLESS OTHERWISE INDICATED TOP CHORD SHALL HAVE PROPERLY ATTACHED STRUCTURAL PANELS AND BOTTOM CHORD SHALL HAVE A PROPERLY ATTACHED RIGID CEILING.

IMPORTANTFURNISH A COPY OF THIS DESIGN TO THE INSTALLATION CONTRACTOR. ITW BCG, INC. SHALL NOT BE RESPONSIBLE FOR ANY DEVIATION FROM THIS DESIGN; ANY FAILURE TO BUILD THE TRUSS IN CONFORMANCE WITH TPI; OR FABRICATING, HANDLING, SHIPPING, INSTALLING & BRACING OF TRUSSES. DESIGN CONFORMS WITH APPLICABLE PROVISIONS OF NDS (NATIONAL DESIGN SPEC. BY AF&PA) AND TPI. ITW BCG CONNECTOR PLATES ARE MADE OF 20/18/16GA (W,H/SS/K) ASTM A653 GRADE 40/60 (W, K/H,SS) GALV. STEEL. APPLY PLATES TO EACH FACE OF TRUSS AND, UNLESS OTHERWISE LOCATED ON THIS DESIGN, POSITION PER DRAWINGS 160A-Z. ANY INSPECTION OF PLATES FOLLOWED BY (1) SHALL BE PER ANNEX A3 OF TPI1-2002 SEC.3. A SEAL ON THIS DRAWING INDICATES ACCEPTANCE OF PROFESSIONAL ENGINEERING RESPONSIBILITY SOLELY FOR THE TRUSS COMPONENT DESIGN SHOWN. THE SUITABILITY AND USE OF THIS COMPONENT FOR ANY BUILDING IS THE RESPONSIBILITY OF THE BUILDING DESIGNER PER ANSI/TPI 1 SEC. 2.

JAMES F. COLLINS JR. LICENSE No.52212 STATE OF FLORIDA PROFESSIONAL ENGINEER
Dec 17 '07

TC LL	20.0 PSF	REF	R215-- 96010
TC DL	10.0 PSF	DATE	12/17/07
BC DL	10.0 PSF	DRW	HCUSR215 07351021
BC LL	0.0 PSF	HC-ENG	WHK/WHK *
TOT.LD.	40.0 PSF	SEQN-	89425
DUR.FAC.	1.25	FROM	LRB
SPACING	24.0"	JREF-	1TDD215_Z02

Top chord 2x4 SP #2 N
Bot chord 2x4 SP #2 N :B3 2x4 SP SS:
Webs 2x4 SP #2 N

Left end vertical not exposed to wind pressure.

(A) Continuous lateral bracing equally spaced on member. Or 1x4 "T" brace. 80% length of web member. Same species & grade or better, attached with 8d Box or Gun (0.113"x2.5",min.)nails @ 6" OC.

The overall height of this truss excluding overhang is 11-4-3.

110 mph wind, 15.00 ft mean hgt, ASCE 7-02, CLOSED bldg, not located within 6.50 ft from roof edge, CAT II, EXP B, wind TC DL=5.0 psf, wind BC DL=5.0 psf. Iw=1.00 GCpi(+/-)=0.18

Wind reactions based on MWFRS pressures.

Deflection meets L/240 live and L/180 total load.

WARNING: Furnish a copy of this DWG to the installation contractor. Special care must be taken during handling, shipping and installation of trusses. See "WARNING" note below.

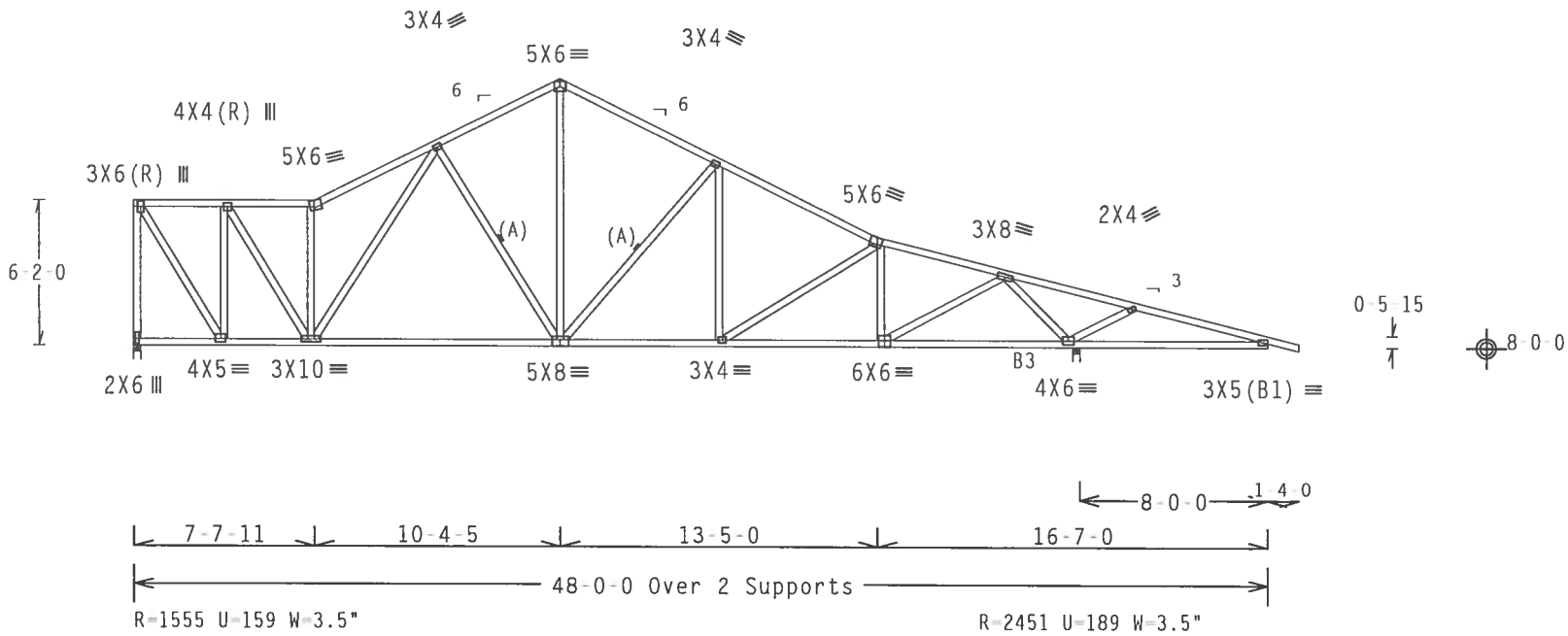

Design Crit: TPI-2002(STD)/FBC

PLT TYP. Wave Cq/RT=1.00(1.25)/0(0) 7.38.081[illegible]22 QTY:1 FL/-/5/-/-/R/- Scale =.125"/Ft.

ALPINE
ITW Building Components Group, Inc.
Haines City, FL 33844
FL Certificate of Authorization # 0 278

WARNING TRUSSES REQUIRE EXTREME CARE IN FABRICATION, HANDLING, SHIPPING, INSTALLING AND BRACING. REFER TO BCSI (BUILDING COMPONENT SAFETY INFORMATION), PUBLISHED BY TPI (TRUSS PLATE INSTITUTE, 218 NORTH LEE STREET, SUITE 312, ALEXANDRIA, VA, 22314) AND WTCA (WOOD TRUSS COUNCIL OF AMERICA, 6300 ENTERPRISE LANE, MADISON, WI 53719) FOR SAFETY PRACTICES PRIOR TO PERFORMING THESE FUNCTIONS. UNLESS OTHERWISE INDICATED TOP CHORD SHALL HAVE PROPERLY ATTACHED STRUCTURAL PANELS AND BOTTOM CHORD SHALL HAVE A PROPERLY ATTACHED RIGID CEILING.

IMPORTANTFURNISH A COPY OF THIS DESIGN TO THE INSTALLATION CONTRACTOR. ITW BCG, INC. SHALL NOT BE RESPONSIBLE FOR ANY DEVIATION FROM THIS DESIGN; ANY FAILURE TO BUILD THE TRUSS IN CONFORMANCE WITH TPI; OR FABRICATING, HANDLING, SHIPPING, INSTALLING & BRACING OF TRUSSES. DESIGN CONFORMS WITH APPLICABLE PROVISIONS OF NDS (NATIONAL DESIGN SPEC, BY AF&PA) AND TPI. ITW BCG CONNECTOR PLATES ARE MADE OF 20/18/16GA (W,H/SS/K) ASTM A653 GRADE 40/60 (W, K/H,SS) GALV. STEEL. APPLY PLATES TO EACH FACE OF TRUSS AND, UNLESS OTHERWISE LOCATED ON THIS DESIGN, POSITION PER DRAWINGS 160A-Z. ANY INSPECTION OF PLATES FOLLOWED BY (1) SHALL BE PER ANNEX A3 OF TPI1-2002 SEC.3. A SEAL ON THIS DRAWING INDICATES ACCEPTANCE OF PROFESSIONAL ENGINEERING RESPONSIBILITY SOLELY FOR THE TRUSS COMPONENT DESIGN SHOWN. THE SUITABILITY AND USE OF THIS COMPONENT FOR ANY BUILDING IS THE RESPONSIBILITY OF THE BUILDING DESIGNER PER ANSI/TPI 1 SEC. 2.

JAMES F. COLLINS JR. LICENSE No. 52212 STATE OF FLORIDA PROFESSIONAL ENGINEER
Dec 17 '07

TC LL	20.0 PSF	REF	R215-- 96011
TC DL	10.0 PSF	DATE	12/17/07
BC DL	10.0 PSF	DRW	HCUSR215 07351022
BC LL	0.0 PSF	HC-ENG	WHK/WHK *
TOT.LD.	40.0 PSF	SEQN-	89419
DUR.FAC.	1.25	FROM	LRB
SPACING	24.0"	JREF-	1TDD215_Z02

THIS DWG PREPARED FROM COMPUTER INPUT (LOADS & DIMENSIONS) SUBMITTED BY TRUSS MFR.

Top chord 2x4 SP #2 N
Bot chord 2x4 SP #2 N
Webs 2x4 SP #2 N

In lieu of rigid ceiling use purlins to brace BC @ 24" OC.

Deflection meets L/240 live and L/180 total load.

REFER TO PIGBACKA0207 OR PIGBACKB0207 FOR PIGYBACK DETAILS.
TOP CHORD OF SUPPORTING TRUSS UNDER PIGGYBACK TO BE BRACED @ 24" O.C, UNLESS OTHERWISE SPECIFIED.

110 mph wind, 18.65 ft mean hgt, ASCE 7-02, CLOSED bldg, Located anywhere in roof, CAT II, EXP B, wind TC DL=5.0 psf, wind BC DL=2.0 psf. Iw=1.00 GCpi(+/-)=0.18

The overall height of this truss excluding overhang is 1-3-4.

SPECIAL LOADS
------(LUMBER DUR.FAC.=1.25 / PLATE DUR.FAC.=1.25)

TC -	From	66 PLF	at -0.62	to	66 PLF	at	0.87
TC -	From	66 PLF	at 0.87	to	66 PLF	at	2.36
BC -	From	4 PLF	at -0.62	to	4 PLF	at	2.36

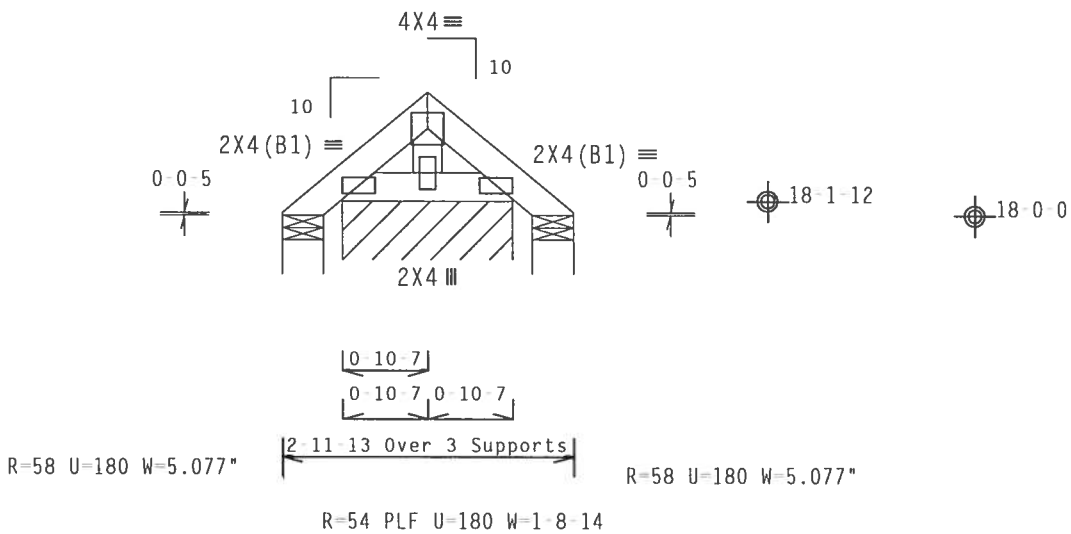

Design Crit: TPI-2002(STD)/FBC

PLT TYP. Wave Cq/RT=1.00(1.25)/0(0) 7.38.0810-F2 QTY:12 FL/-/5/-/-/R/- Scale =.5"/Ft.

ALPINE
ITW Building Components Group, Inc.
Haines City, FL 33844
FL Certificate of Authorization # 0 278

WARNING TRUSSES REQUIRE EXTREME CARE IN FABRICATION, HANDLING, SHIPPING, INSTALLING AND BRACING. REFER TO BCSI (BUILDING COMPONENT SAFETY INFORMATION), PUBLISHED BY TPI (TRUSS PLATE INSTITUTE, 218 NORTH LEE STREET, SUITE 312, ALEXANDRIA, VA. 22314) AND WTCA (WOOD TRUSS COUNCIL OF AMERICA, 6300 ENTERPRISE LANE, MADISON, WI 53719) FOR SAFETY PRACTICES PRIOR TO PERFORMING THESE FUNCTIONS. UNLESS OTHERWISE INDICATED TOP CHORD SHALL HAVE PROPERLY ATTACHED STRUCTURAL PANELS AND BOTTOM CHORD SHALL HAVE A PROPERLY ATTACHED RIGID CEILING.

IMPORTANTFURNISH A COPY OF THIS DESIGN TO THE INSTALLATION CONTRACTOR. ITW BCG, INC. SHALL NOT BE RESPONSIBLE FOR ANY DEVIATION FROM THIS DESIGN; ANY FAILURE TO BUILD THE TRUSS IN CONFORMANCE WITH TPI; OR FABRICATING, HANDLING, SHIPPING, INSTALLING & BRACING OF TRUSSES. DESIGN CONFORMS WITH APPLICABLE PROVISIONS OF NDS (NATIONAL DESIGN SPEC. BY AF&PA) AND TPI. ITW BCG CONNECTOR PLATES ARE MADE OF 20/18/16GA (W,H/SS/K) ASTM A653 GRADE 40/60 (W, K/H,SS) GALV. STEEL. APPLY PLATES TO EACH FACE OF TRUSS AND, UNLESS OTHERWISE LOCATED ON THIS DESIGN, POSITION PER DRAWINGS 160A Z. ANY INSPECTION OF PLATES FOLLOWED BY (I) SHALL BE PER ANNEX A3 OF TPI1 2002 SEC 3. A SEAL ON THIS DRAWING INDICATES ACCEPTANCE OF PROFESSIONAL ENGINEERING RESPONSIBILITY SOLELY FOR THE TRUSS COMPONENT DESIGN SHOWN. THE SUITABILITY AND USE OF THIS COMPONENT FOR ANY BUILDING IS THE RESPONSIBILITY OF THE BUILDING DESIGNER PER ANSI/TPI 1 SEC. 2.

JAMES F. COLLINS, JR. LICENSE No. 52212 STATE OF FLORIDA PROFESSIONAL ENGINEER
Dec 17 '07

TC LL	20.0 PSF	REF R215-- 96012
TC DL	10.0 PSF	DATE 12/17/07
BC DL	10.0 PSF	DRW HCUSR215 07351046
BC LL	0.0 PSF	HC-ENG WHK/WHK
TOT.LD.	40.0 PSF	SEQN- 89346
DUR.FAC.	1.25	FROM LRB
SPACING	24.0"	JREF- 1TDD215_Z02

(4909 /THERESA BARBALE /OWNER BUILDER -- , ** - A17)

Top chord 2x4 SP SS
Bot chord 2x4 SP #2 N
Webs 2x4 SP #2 N

End verticals not exposed to wind pressure.

(A) Continuous lateral bracing equally spaced on member. Or 1x4 "T" brace. 80% length of web member. Same species & grade or better, attached with 8d Box or Gun (0.113"x2.5",min.)nails @ 6" OC.

Deflection meets L/240 live and L/180 total load.

110 mph wind, 16.67 ft mean hgt, ASCE 7-02, CLOSED bldg, not located within 4.50 ft from roof edge, CAT II, EXP B, wind TC DL=5.0 psf, wind BC DL=5.0 psf. Iw=1.00 GCpi(+/-)=0.18

Wind reactions based on MWFRS pressures.

In lieu of structural panels use purlins to brace TC @ 24" OC.

Trusses to be spaced at 48.0" OC maximum.

Truss must be installed as shown with top chord up.

The overall height of this truss excluding overhang is 8-8-0.

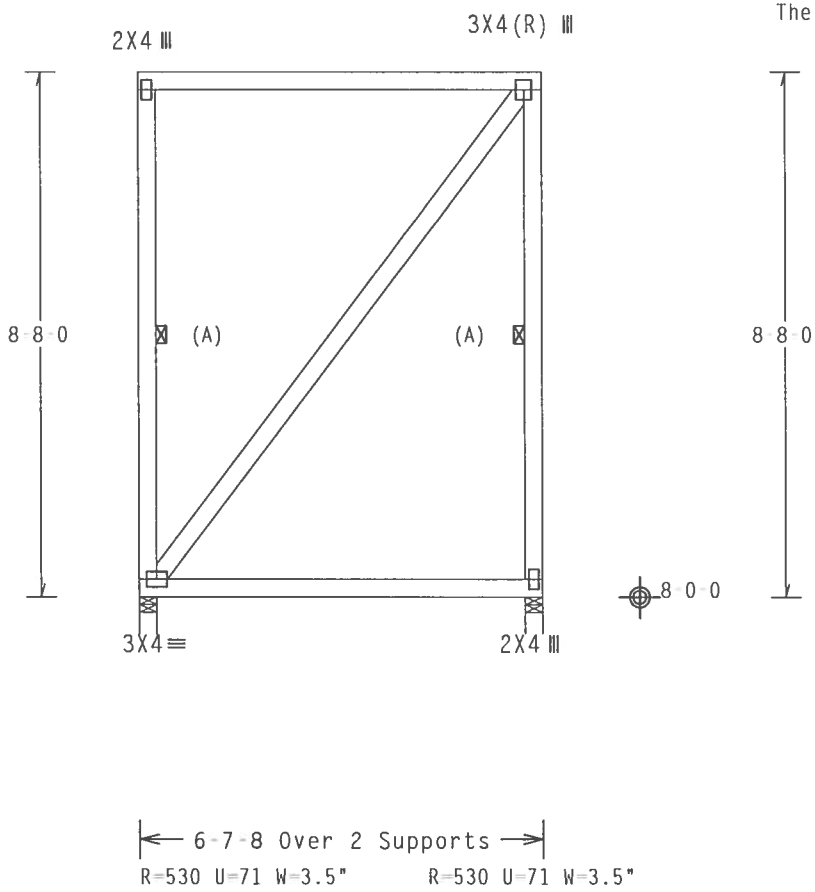

Design Crit: TPI-2002(STD)/FBC

PLT TYP. Wave Cq/RT=1.00(1.25)/0(0) 7.38.0810 QTY:1 FL/-/5/-/-/R/- Scale =.3125"/Ft.

ALPINE
ITW Building Components Group, Inc.
Haines City, FL 33844
FL Certificate of Authorization # 0 278

WARNING TRUSSES REQUIRE EXTREME CARE IN FABRICATION, HANDLING, SHIPPING, INSTALLING AND BRACING. REFER TO BCSI (BUILDING COMPONENT SAFETY INFORMATION), PUBLISHED BY TPI (TRUSS PLATE INSTITUTE, 218 NORTH LEE STREET, SUITE 312, ALEXANDRIA, VA, 22314) AND WTCA (WOOD TRUSS COUNCIL OF AMERICA, 6300 ENTERPRISE LANE, MADISON, WI 53719) FOR SAFETY PRACTICES PRIOR TO PERFORMING THESE FUNCTIONS. UNLESS OTHERWISE INDICATED TOP CHORD SHALL HAVE PROPERLY ATTACHED STRUCTURAL PANELS AND BOTTOM CHORD SHALL HAVE A PROPERLY ATTACHED RIGID CEILING.

IMPORTANTFURNISH A COPY OF THIS DESIGN TO THE INSTALLATION CONTRACTOR. ITW BCG, INC. SHALL NOT BE RESPONSIBLE FOR ANY DEVIATION FROM THIS DESIGN; ANY FAILURE TO BUILD THE TRUSS IN CONFORMANCE WITH TPI; OR FABRICATING, HANDLING, SHIPPING, INSTALLING & BRACING OF TRUSSES. DESIGN CONFORMS WITH APPLICABLE PROVISIONS OF NDS (NATIONAL DESIGN SPEC. BY AF&PA) AND TPI. ITW BCG CONNECTOR PLATES ARE MADE OF 20/18/16GA (W,H/SS/K) ASTM A653 GRADE 40/60 (W, K/H,SS) GALV. STEEL. APPLY PLATES TO EACH FACE OF TRUSS AND, UNLESS OTHERWISE LOCATED ON THIS DESIGN, POSITION PER DRAWINGS 160A-Z. ANY INSPECTION OF PLATES FOLLOWED BY (I) SHALL BE PER ANNEX A3 OF TPI1-2002 SEC.3. A SEAL ON THIS DRAWING INDICATES ACCEPTANCE OF PROFESSIONAL ENGINEERING RESPONSIBILITY SOLELY FOR THE TRUSS COMPONENT DESIGN SHOWN. THE SUITABILITY AND USE OF THIS COMPONENT FOR ANY BUILDING IS THE RESPONSIBILITY OF THE BUILDING DESIGNER PER ANSI/TPI 1 SEC. 2.

JAMES F. COLLINS, JR. LICENSE No. 52212 STATE OF FLORIDA PROFESSIONAL ENGINEER
Dec 17, 07

TC LL	20.0 PSF	REF	R215-- 96013
TC DL	10.0 PSF	DATE	12/17/07
BC DL	10.0 PSF	DRW	HCUSR215 07351036
BC LL	0.0 PSF	HC-ENG	WHK/WHK
TOT.LD.	40.0 PSF	SEQN-	89549
DUR.FAC.	1.25	FROM	LRB
SPACING	48.0"	JREF-	1TDD215_Z02

(4909 /THERESA BARBALE /OWNER BUILDER -- , ** - A18)

THIS DWG PREPARED FROM COMPUTER INPUT (LOADS & DIMENSIONS) SUBMITTED BY TRUSS MFR.

Top chord 2x4 SP #2 N
Bot chord 2x4 SP #2 N
Webs 2x4 SP #2 N

End verticals not exposed to wind pressure.

Deflection meets L/240 live and L/180 total load.

Truss must be installed as shown with top chord up.

110 mph wind, 15.00 ft mean hgt, ASCE 7-02, CLOSED bldg, not located within 4.50 ft from roof edge, CAT II, EXP B, wind TC DL=5.0 psf, wind BC DL=5.0 psf. Iw=1.00 GCpi(+/-)=0.18

Wind reactions based on MWFRS pressures.

Provide for complete drainage of roof.

The overall height of this truss excluding overhang is 7-0-0.

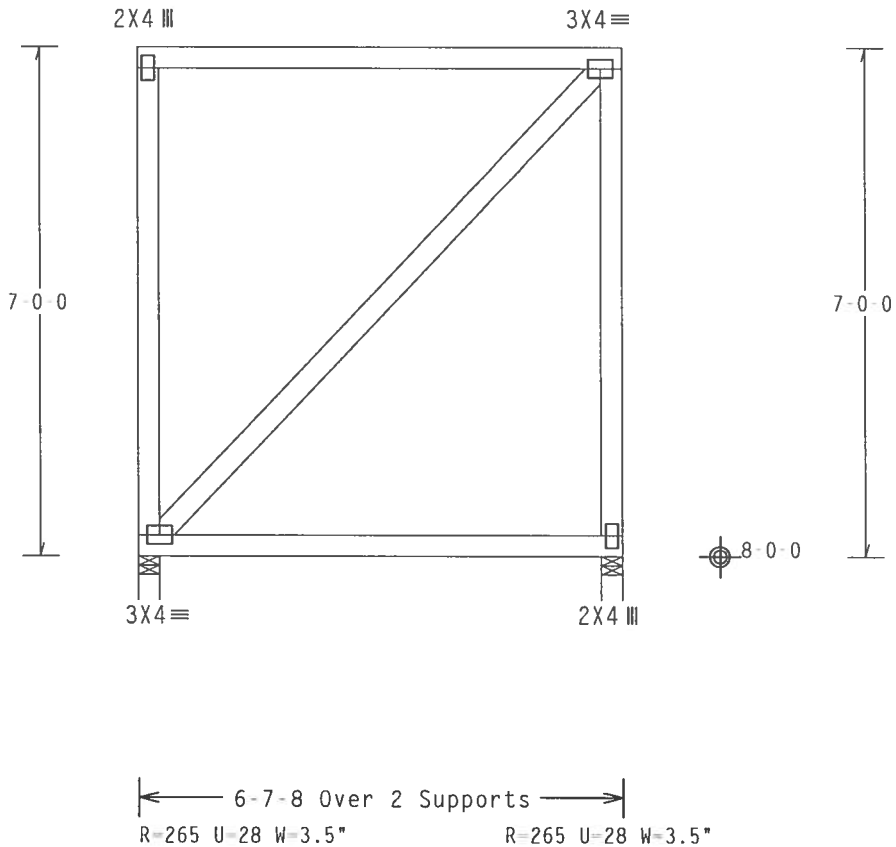

Design Crit: TPI-2002(STD)/FBC

PLT TYP. Wave Cq/RT=1.00(1.25)/0(0) 7.38.0810 QTY:1 FL/-/5/-/-/R/- Scale =.375"/Ft.

ALPINE
ITW Building Components Group, Inc.
Haines City, FL 33844
FL Certificate of Authorization # 0 278

WARNING TRUSSES REQUIRE EXTREME CARE IN FABRICATION, HANDLING, SHIPPING, INSTALLING AND BRACING. REFER TO BCSI (BUILDING COMPONENT SAFETY INFORMATION), PUBLISHED BY TPI (TRUSS PLATE INSTITUTE, 218 NORTH LEE STREET, SUITE 312, ALEXANDRIA, VA, 22314) AND WTCA (WOOD TRUSS COUNCIL OF AMERICA, 6300 ENTERPRISE LANE, MADISON, WI 53719) FOR SAFETY PRACTICES PRIOR TO PERFORMING THESE FUNCTIONS. UNLESS OTHERWISE INDICATED TOP CHORD SHALL HAVE PROPERLY ATTACHED STRUCTURAL PANELS AND BOTTOM CHORD SHALL HAVE A PROPERLY ATTACHED RIGID CEILING.

IMPORTANTFURNISH A COPY OF THIS DESIGN TO THE INSTALLATION CONTRACTOR. ITW BCG, INC. SHALL NOT BE RESPONSIBLE FOR ANY DEVIATION FROM THIS DESIGN; ANY FAILURE TO BUILD THE TRUSS IN CONFORMANCE WITH TPI; OR FABRICATING, HANDLING, SHIPPING, INSTALLING & BRACING OF TRUSSES.
DESIGN CONFORMS WITH APPLICABLE PROVISIONS OF NDS (NATIONAL DESIGN SPEC. BY AF&PA) AND TPI. ITW BCG CONNECTOR PLATES ARE MADE OF 20/18/16GA (W,H/SS/K) ASTM A653 GRADE 40/60 (W, K/H,SS) GALV. STEEL. APPLY PLATES TO EACH FACE OF TRUSS AND, UNLESS OTHERWISE LOCATED ON THIS DESIGN, POSITION PER DRAWINGS 160A-Z. ANY INSPECTION OF PLATES FOLLOWED BY (1) SHALL BE PER ANNEX A3 OF TPI1-2002 SEC.3. A SEAL ON THIS DRAWING INDICATES ACCEPTANCE OF PROFESSIONAL ENGINEERING RESPONSIBILITY SOLELY FOR THE TRUSS COMPONENT DESIGN SHOWN. THE SUITABILITY AND USE OF THIS COMPONENT FOR ANY BUILDING IS THE RESPONSIBILITY OF THE BUILDING DESIGNER PER ANSI/TPI 1 SEC. 2.

JAMES E. COLLINS JR. LICENSE No. 52212 STATE OF FLORIDA PROFESSIONAL ENGINEER
Dec 17 07

TC LL	20.0 PSF	REF	R215-- 96014
TC DL	10.0 PSF	DATE	12/17/07
BC DL	10.0 PSF	DRW	HCUSR215 07351023
BC LL	0.0 PSF	HC-ENG	WHK/WHK *
TOT.LD.	40.0 PSF	SEQN-	89540
DUR.FAC.	1.25	FROM	LRB
SPACING	24.0"	JREF-	1TDD215_Z02

Top chord 2x4 SP SS
Bot chord 2x4 SP #2 N
Webs 2x4 SP #2 N

End verticals not exposed to wind pressure.

In lieu of structural panels use purlins to brace TC @ 24" OC.

Deflection meets L/240 live and L/180 total load.

The overall height of this truss excluding overhang is 6-0-5.

110 mph wind, 15.00 ft mean hgt, ASCE 7-02, CLOSED bldg, not located within 4.50 ft from roof edge, CAT II, EXP B, wind TC DL=5.0 psf, wind BC DL=5.0 psf. Iw=1.00 GCpi(+/-)=0.18

Wind reactions based on MWFRS pressures.

Trusses to be spaced at 48.0" OC maximum.

Truss must be installed as shown with top chord up.

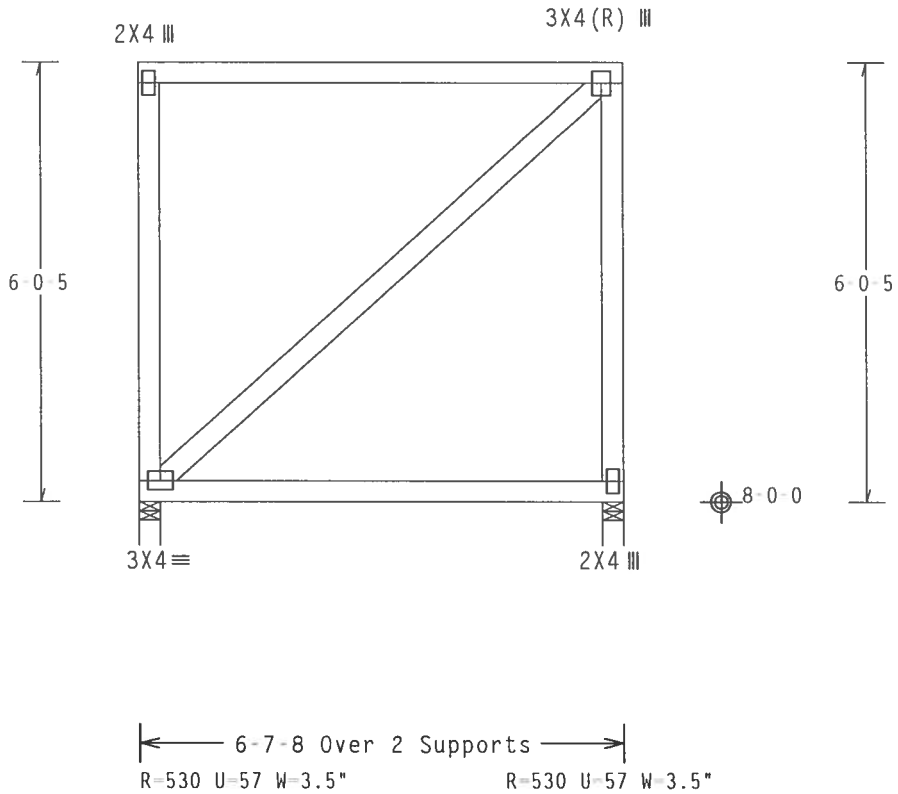

Design Crit: TPI-2002(STD)/FBC

PLT TYP. Wave Cq/RT=1.00(1.25)/0(0) 7.38.0810 QTY:1 FL/-/5/-/-/R/- Scale =.375"/Ft.

ALPINE

ITW Building Components Group, Inc.
Haines City, FL 33844
FL Certificate of Authorization # 0 278

WARNING TRUSSES REQUIRE EXTREME CARE IN FABRICATION, HANDLING, SHIPPING, INSTALLING AND BRACING. REFER TO BCSI (BUILDING COMPONENT SAFETY INFORMATION), PUBLISHED BY TPI (TRUSS PLATE INSTITUTE, 218 NORTH LEE STREET, SUITE 312, ALEXANDRIA, VA. 22314) AND WTCA (WOOD TRUSS COUNCIL OF AMERICA, 6300 ENTERPRISE LANE, MADISON, WI 53719) FOR SAFETY PRACTICES PRIOR TO PERFORMING THESE FUNCTIONS. UNLESS OTHERWISE INDICATED TOP CHORD SHALL HAVE PROPERLY ATTACHED STRUCTURAL PANELS AND BOTTOM CHORD SHALL HAVE A PROPERLY ATTACHED RIGID CEILING.

IMPORTANTFURNISH A COPY OF THIS DESIGN TO THE INSTALLATION CONTRACTOR. ITW BCG, INC. SHALL NOT BE RESPONSIBLE FOR ANY DEVIATION FROM THIS DESIGN; ANY FAILURE TO BUILD THE TRUSS IN CONFORMANCE WITH TPI; OR FABRICATING, HANDLING, SHIPPING, INSTALLING & BRACING OF TRUSSES. DESIGN CONFORMS WITH APPLICABLE PROVISIONS OF NDS (NATIONAL DESIGN SPEC. BY AF&PA) AND TPI. ITW BCG CONNECTOR PLATES ARE MADE OF 20/18/16GA (W,H/SS/K) ASTM A653 GRADE 40/60 (W, K/H,SS) GALV. STEEL. APPLY PLATES TO EACH FACE OF TRUSS AND, UNLESS OTHERWISE LOCATED ON THIS DESIGN, POSITION PER DRAWINGS 160A-Z. ANY INSPECTION OF PLATES FOLLOWED BY (1) SHALL BE PER ANNEX A3 OF TPI1-2002 SEC.3. A SEAL ON THIS DRAWING INDICATES ACCEPTANCE OF PROFESSIONAL ENGINEERING RESPONSIBILITY SOLELY FOR THE TRUSS COMPONENT DESIGN SHOWN. THE SUITABILITY AND USE OF THIS COMPONENT FOR ANY BUILDING IS THE RESPONSIBILITY OF THE BUILDING DESIGNER PER ANSI/TPI 1 SEC. 2.

JAMES F. COLLINS JR. LICENSE No. 52212 STATE OF FLORIDA PROFESSIONAL ENGINEER
Dec 17 07

TC LL	20.0 PSF	REF	R215-- 96015
TC DL	10.0 PSF	DATE	12/17/07
BC DL	10.0 PSF	DRW	HCUSR215 07351037
BC LL	0.0 PSF	HC-ENG	WHK/WHK
TOT.LD.	40.0 PSF	SEQN-	89535
DUR.FAC.	1.25	FROM	LRB
SPACING	48.0"	JREF-	1TDD215_Z02

THIS DWG PREPARED FROM COMPUTER INPUT (LOADS & DIMENSIONS) SUBMITTED BY TRUSS MFR.

Top chord 2x4 SP #2 N
Bot chord 2x4 SP #2 N
Webs 2x4 SP #2 N

Deflection meets L/240 live and L/180 total load.

Fasten rated sheathing to one face of this frame.

The overall height of this truss excluding overhang is 2-11-4.

110 mph wind, 15.00 ft mean hgt, ASCE 7-02, CLOSED bldg, Located anywhere in roof, CAT II, EXP B, wind TC DL=5.0 psf, wind BC DL=5.0 psf. Iw=1.00 GCpi(+/-)=0.18

Wind reactions based on MWFRS pressures.

Right end vertical not exposed to wind pressure.

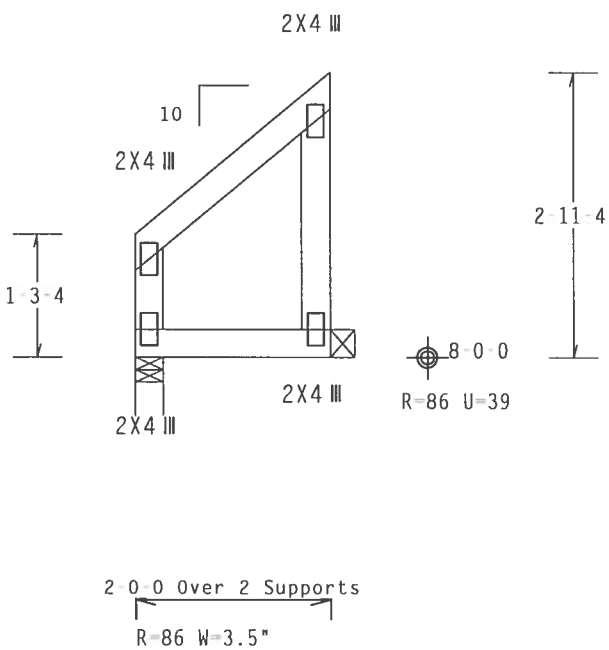

Design Crit: TPI-2002(STD)/FBC

PLT TYP. Wave Cq/RT=1.00(1.25)/0(0) 7.38.0810 QTY:1 FL/-/5/-/-/R/- Scale =.5"/Ft.

ALPINE
ITW Building Components Group, Inc.
Haines City, FL 33844
FL Certificate of Authorization # 0 278

WARNING TRUSSES REQUIRE EXTREME CARE IN FABRICATION, HANDLING, SHIPPING, INSTALLING AND BRACING. REFER TO BCSI (BUILDING COMPONENT SAFETY INFORMATION), PUBLISHED BY TPI (TRUSS PLATE INSTITUTE, 218 NORTH LEE STREET, SUITE 312, ALEXANDRIA, VA, 22314) AND WTCA (WOOD TRUSS COUNCIL OF AMERICA, 6300 ENTERPRISE LANE, MADISON, WI 53719) FOR SAFETY PRACTICES PRIOR TO PERFORMING THESE FUNCTIONS. UNLESS OTHERWISE INDICATED TOP CHORD SHALL HAVE PROPERLY ATTACHED STRUCTURAL PANELS AND BOTTOM CHORD SHALL HAVE A PROPERLY ATTACHED RIGID CEILING.

IMPORTANTFURNISH A COPY OF THIS DESIGN TO THE INSTALLATION CONTRACTOR. ITW BCG, INC. SHALL NOT BE RESPONSIBLE FOR ANY DEVIATION FROM THIS DESIGN; ANY FAILURE TO BUILD THE TRUSS IN CONFORMANCE WITH TPI; OR FABRICATING, HANDLING, SHIPPING, INSTALLING & BRACING OF TRUSSES. DESIGN CONFORMS WITH APPLICABLE PROVISIONS OF NDS (NATIONAL DESIGN SPEC. BY AF&PA) AND TPI. ITW BCG CONNECTOR PLATES ARE MADE OF 20/18/16GA (W.H/SS/K) ASTM A653 GRADE 40/60 (W. K/H.SS) GALV. STEEL. APPLY PLATES TO EACH FACE OF TRUSS AND, UNLESS OTHERWISE LOCATED ON THIS DESIGN, POSITION PER DRAWINGS 160A-Z. ANY INSPECTION OF PLATES FOLLOWED BY (I) SHALL BE PER ANNEX A3 OF TPI1 2002 SEC.3. A SEAL ON THIS DRAWING INDICATES ACCEPTANCE OF PROFESSIONAL ENGINEERING RESPONSIBILITY SOLELY FOR THE TRUSS COMPONENT DESIGN SHOWN. THE SUITABILITY AND USE OF THIS COMPONENT FOR ANY BUILDING IS THE RESPONSIBILITY OF THE BUILDING DESIGNER PER ANSI/TPI 1 SEC. 2.

JAMES F. COLLINS JR. LICENSE No. 52212 STATE OF FLORIDA PROFESSIONAL ENGINEER
Dec 17-07

TC LL	20.0 PSF	REF	R215-- 96016
TC DL	10.0 PSF	DATE	12/17/07
BC DL	10.0 PSF	DRW	HCUSR215 07351038
BC LL	0.0 PSF	HC-ENG	WHK/WHK
TOT.LD.	40.0 PSF	SEQN-	89483
DUR.FAC.	1.25	FROM	LRB
SPACING	24.0"	JREF-	1TDD215_Z02

(4909-/THERESA BARBALE /OWNER BUILDER -- , ** - A21)

THIS DWG PREPARED FROM COMPUTER INPUT (LOADS & DIMENSIONS) SUBMITTED BY TRUSS MFR.

Top chord 2x4 SP #2 N
Bot chord 2x4 SP #2 N
Webs 2x4 SP #2 N

Deflection meets L/240 live and L/180 total load.

Fasten rated sheathing to one face of this frame.

The overall height of this truss excluding overhang is 2-11-4.

110 mph wind, 15.00 ft mean hgt, ASCE 7-02, CLOSED bldg, Located anywhere in roof, CAT II, EXP B, wind TC DL=5.0 psf, wind BC DL=5.0 psf. Iw=1.00 GCpi(+/-)=0.18

Wind reactions based on MWFRS pressures.

Right end vertical not exposed to wind pressure.

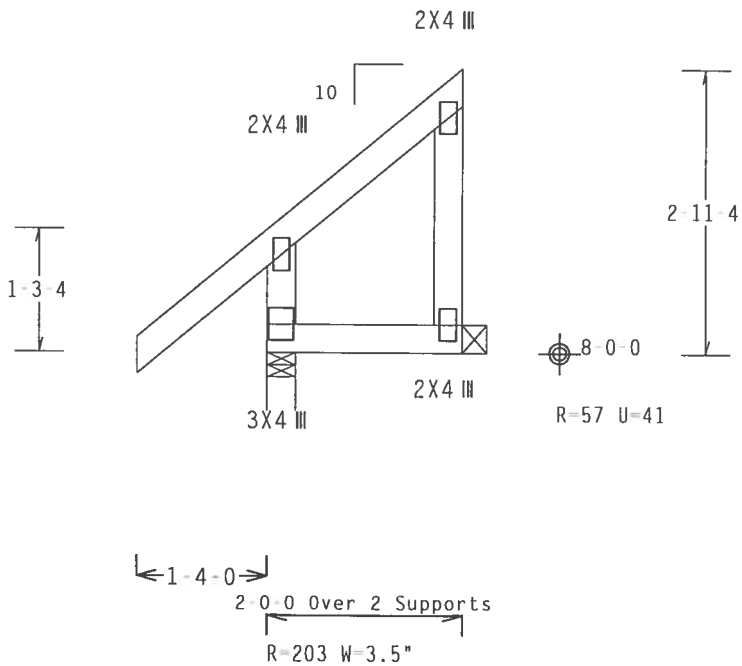

Design Crit: TPI-2002(STD)/FBC

PLT TYP. Wave Cq/RT=1.00(1.25)/0(0) 7.38.0810-02 QTY:2 FL/-/5/-/-/R/- Scale =.5"/Ft.

ALPINE

ITW Building Components Group, Inc.
Haines City, FL 33844
FL Certificate of Authorization # 0 278

WARNING TRUSSES REQUIRE EXTREME CARE IN FABRICATION, HANDLING, SHIPPING, INSTALLING AND BRACING. REFER TO BCSI (BUILDING COMPONENT SAFETY INFORMATION), PUBLISHED BY TPI (TRUSS PLATE INSTITUTE, 218 NORTH LEE STREET, SUITE 312, ALEXANDRIA, VA. 22314) AND WTCA (WOOD TRUSS COUNCIL OF AMERICA, 6300 ENTERPRISE LANE, MADISON, WI 53719) FOR SAFETY PRACTICES PRIOR TO PERFORMING THESE FUNCTIONS. UNLESS OTHERWISE INDICATED TOP CHORD SHALL HAVE PROPERLY ATTACHED STRUCTURAL PANELS AND BOTTOM CHORD SHALL HAVE A PROPERLY ATTACHED RIGID CEILING.

IMPORTANTFURNISH A COPY OF THIS DESIGN TO THE INSTALLATION CONTRACTOR. ITW BCG, INC. SHALL NOT BE RESPONSIBLE FOR ANY DEVIATION FROM THIS DESIGN; ANY FAILURE TO BUILD THE TRUSS IN CONFORMANCE WITH TPI; OR FABRICATING, HANDLING, SHIPPING, INSTALLING & BRACING OF TRUSSES.
DESIGN CONFORMS WITH APPLICABLE PROVISIONS OF NDS (NATIONAL DESIGN SPEC. BY AF&PA) AND TPI. ITW BCG CONNECTOR PLATES ARE MADE OF 20/18/16GA (W,H/SS/K) ASTM A653 GRADE 40/60 (W, K/H,SS) GALV. STEEL. APPLY PLATES TO EACH FACE OF TRUSS AND, UNLESS OTHERWISE LOCATED ON THIS DESIGN, POSITION PER DRAWINGS 160A-Z. ANY INSPECTION OF PLATES FOLLOWED BY (1) SHALL BE PER ANNEX A3 OF TPI1-2002 SEC.3. A SEAL ON THIS DRAWING INDICATES ACCEPTANCE OF PROFESSIONAL ENGINEERING RESPONSIBILITY SOLELY FOR THE TRUSS COMPONENT DESIGN SHOWN. THE SUITABILITY AND USE OF THIS COMPONENT FOR ANY BUILDING IS THE RESPONSIBILITY OF THE BUILDING DESIGNER PER ANSI/TPI 1 SEC. 2.

JAMES F. COLLINS, JR. LICENSE No. 52212 STATE OF FLORIDA PROFESSIONAL ENGINEER

Dec 17-07

TC LL	20.0 PSF	REF	R215-- 96017
TC DL	10.0 PSF	DATE	12/17/07
BC DL	10.0 PSF	DRW	HCUSR215 07351039
BC LL	0.0 PSF	HC-ENG	WHK/WHK
TOT.LD.	40.0 PSF	SEQN-	89477
DUR.FAC.	1.25	FROM	LRB
SPACING	24.0"	JREF-	1TDD215_Z02

(4909-/THERESA BARBALE /OWNER BUILDER -- , ** - ATIC1)

Top chord 2x4 SP SS :T2 2x4 SP #2 N:
Bot chord 2x10 SP #2 N :B3 2x4 SP #2 N:
Webs 2x4 SP #2 N

End verticals not exposed to wind pressure.

Calculated horizontal deflection is 0.14" due to live load and 0.19" due to dead load.

Collar-tie braced with continuous lateral bracing at 24" OC. or rigid ceiling.

Deflection meets L/240 live and L/180 total load.

(**) 2 plate(s) require special positioning. Refer to scaled plate plot details for special positioning requirements.

110 mph wind, 15.00 ft mean hgt, ASCE 7-02, CLOSED bldg, Located anywhere in roof, CAT II, EXP B, wind TC DL=5.0 psf, wind BC DL=5.0 psf. Iw=1.00 GCpi(+/-)=0.18

Wind reactions based on MWFRS pressures.

BC attic room floor loading: LL = 40.00 psf; DL = 10.00 psf; from 6-7-0 to 17-5-0.

The overall height of this truss excluding overhang is 11-0-0.

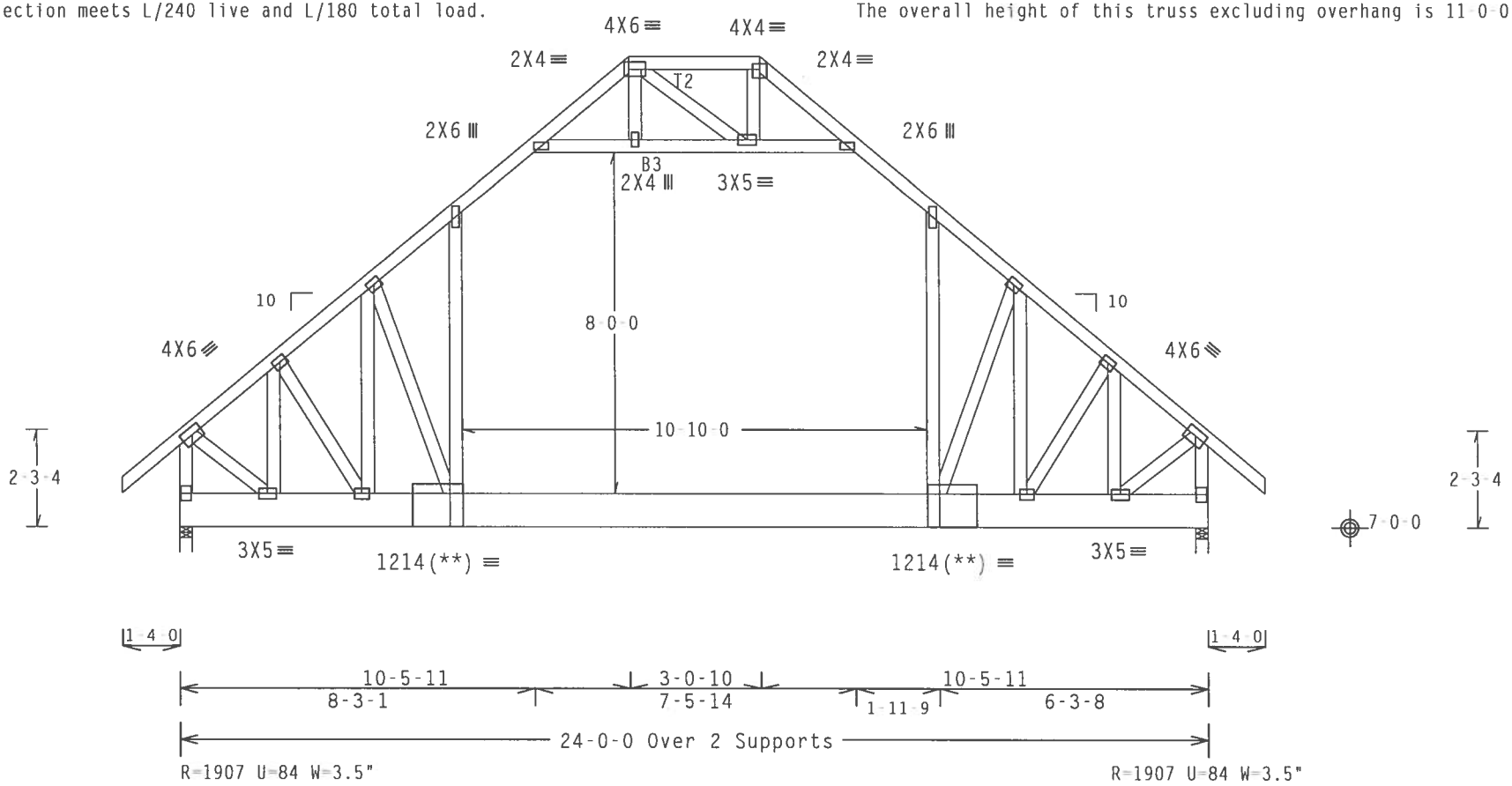

Note: All Plates Are 3X4 Except As Shown.

Design Crit: TPI-2002(STD)/FBC

PLT TYP. Wave Cq/RT=1.00(1.25)/0(0) 7.38.0810.02 QTY:11 FL/-/5/-/-/R/- Scale =.25"/Ft.

ALPINE
ITW Building Components Group, Inc.
Haines City, FL 33844
FL Certificate of Authorization # 0 278

WARNING TRUSSES REQUIRE EXTREME CARE IN FABRICATION, HANDLING, SHIPPING, INSTALLING AND BRACING. REFER TO BCSI (BUILDING COMPONENT SAFETY INFORMATION), PUBLISHED BY TPI (TRUSS PLATE INSTITUTE, 218 NORTH LEE STREET, SUITE 312, ALEXANDRIA, VA. 22314) AND WTCA (WOOD TRUSS COUNCIL OF AMERICA, 6300 ENTERPRISE LANE, MADISON, WI 53719) FOR SAFETY PRACTICES PRIOR TO PERFORMING THESE FUNCTIONS. UNLESS OTHERWISE INDICATED TOP CHORD SHALL HAVE PROPERLY ATTACHED STRUCTURAL PANELS AND BOTTOM CHORD SHALL HAVE A PROPERLY ATTACHED RIGID CEILING.

IMPORTANTFURNISH A COPY OF THIS DESIGN TO THE INSTALLATION CONTRACTOR. ITW BCG, INC. SHALL NOT BE RESPONSIBLE FOR ANY DEVIATION FROM THIS DESIGN; ANY FAILURE TO BUILD THE TRUSS IN CONFORMANCE WITH TPI; OR FABRICATING, HANDLING, SHIPPING, INSTALLING & BRACING OF TRUSSES. DESIGN CONFORMS WITH APPLICABLE PROVISIONS OF NDS (NATIONAL DESIGN SPEC. BY AF&PA) AND TPI. ITW BCG CONNECTOR PLATES ARE MADE OF 20/18/16GA (W,H/SS/K) ASTM A653 GRADE 40/60 (W, K/H,SS) GALV. STEEL. APPLY PLATES TO EACH FACE OF TRUSS AND, UNLESS OTHERWISE LOCATED ON THIS DESIGN, POSITION PER DRAWINGS 160A-Z. ANY INSPECTION OF PLATES FOLLOWED BY (1) SHALL BE PER ANNEX A3 OF TPI1-2002 SEC.3. A SEAL ON THIS DRAWING INDICATES ACCEPTANCE OF PROFESSIONAL ENGINEERING RESPONSIBILITY SOLELY FOR THE TRUSS COMPONENT DESIGN SHOWN. THE SUITABILITY AND USE OF THIS COMPONENT FOR ANY BUILDING IS THE RESPONSIBILITY OF THE BUILDING DESIGNER PER ANSI/TPI 1 SEC. 2.

JAMES F. COLLINS JR. LICENSED No.52272 STATE OF FLORIDA PROFESSIONAL ENGINEER

Dec 17, 2007

TC LL	20.0 PSF	REF	R215-- 96018
TC DL	10.0 PSF	DATE	12/17/07
BC DL	10.0 PSF	DRW	HCUSR215 07351040
BC LL	0.0 PSF	HC-ENG	WHK/WHK
TOT.LD.	40.0 PSF	SEQN-	89337
DUR.FAC.	1.25	FROM	LRB
SPACING	24.0"	JREF-	1TDD215_Z02

THIS DWG PREPARED FROM COMPUTER INPUT (LOADS & DIMENSIONS) SUBMITTED BY TRUSS MFR.

Top chord 2x4 SP SS :T2 2x4 SP #2 N:
Bot chord 2x10 SP #2 N :B3 2x4 SP #2 N:
Webs 2x4 SP #2 N

End verticals not exposed to wind pressure.

Calculated horizontal deflection is 0.14" due to live load and 0.19" due to dead load.

Collar-tie braced with continuous lateral bracing at 24" OC. or rigid ceiling.

Deflection meets L/240 live and L/180 total load.

(**) 2 plate(s) require special positioning. Refer to scaled plate plot details for special positioning requirements.

110 mph wind, 15.00 ft mean hgt, ASCE 7-02, CLOSED bldg, Located anywhere in roof, CAT II, EXP B, wind TC DL=5.0 psf, wind BC DL=5.0 psf. Iw=1.00 GCpi(+/-)=0.18

Wind reactions based on MWFRS pressures.

BC attic room floor loading: LL = 40.00 psf; DL = 10.00 psf; from 6-7-0 to 17-5-0.

The overall height of this truss excluding overhang is 11-0-0.

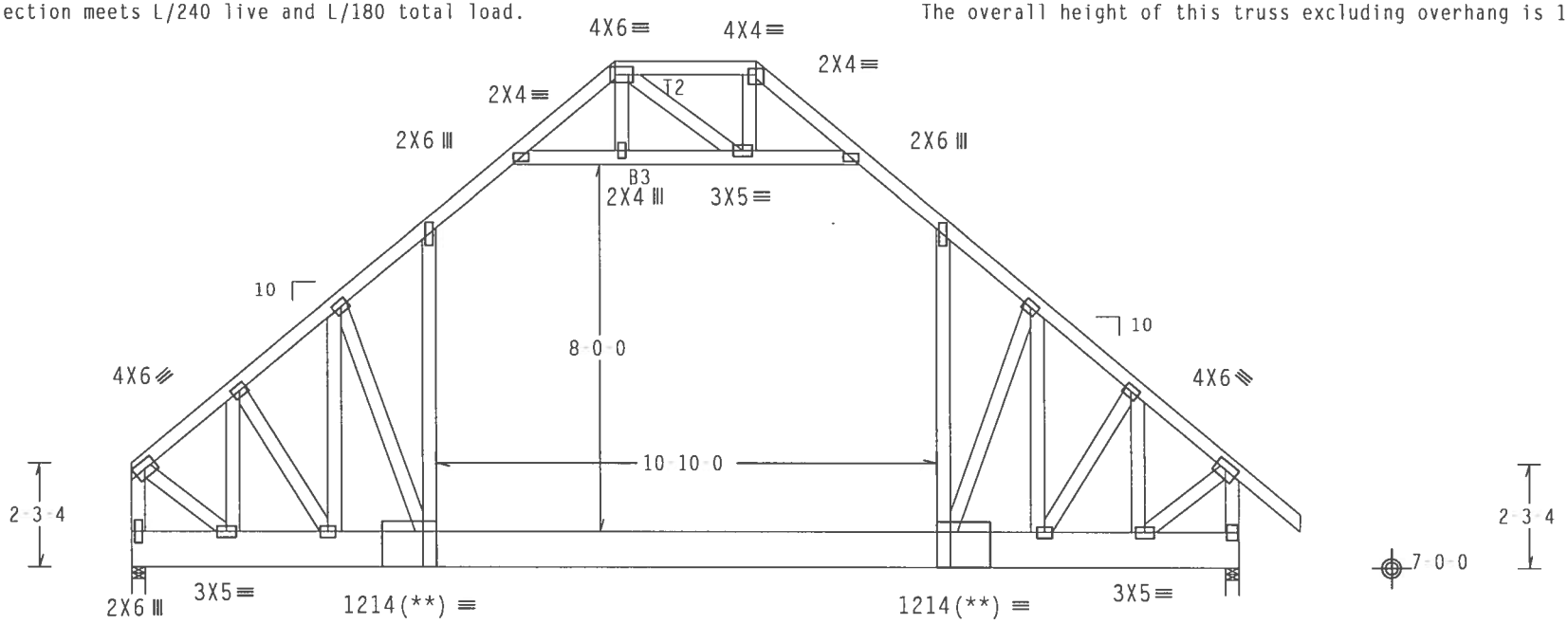

Note: All Plates Are 3X4 Except As Shown.

Design Crit: TPI-2002(STD)/FBC

PLT TYP. Wave Cq/RT=1.00(1.25)/0(0) 7.38.0810.03 QTY:1 FL/-/5/-/-/R/- Scale =.25"/Ft.

ALPINE

ITW Building Components Group, Inc.
Haines City, FL 33844
FL Certificate of Authorization # 0 278

WARNING TRUSSES REQUIRE EXTREME CARE IN FABRICATION, HANDLING, SHIPPING, INSTALLING AND BRACING. REFER TO BCSI (BUILDING COMPONENT SAFETY INFORMATION), PUBLISHED BY TPI (TRUSS PLATE INSTITUTE, 218 NORTH LEE STREET, SUITE 312, ALEXANDRIA, VA. 22314) AND WTCA (WOOD TRUSS COUNCIL OF AMERICA, 6300 ENTERPRISE LANE, MADISON, WI 53719) FOR SAFETY PRACTICES PRIOR TO PERFORMING THESE FUNCTIONS. UNLESS OTHERWISE INDICATED TOP CHORD SHALL HAVE PROPERLY ATTACHED STRUCTURAL PANELS AND BOTTOM CHORD SHALL HAVE A PROPERLY ATTACHED RIGID CEILING.

IMPORTANTFURNISH A COPY OF THIS DESIGN TO THE INSTALLATION CONTRACTOR. ITW BCG, INC. SHALL NOT BE RESPONSIBLE FOR ANY DEVIATION FROM THIS DESIGN; ANY FAILURE TO BUILD THE TRUSS IN CONFORMANCE WITH TPI; OR FABRICATING, HANDLING, SHIPPING, INSTALLING & BRACING OF TRUSSES. DESIGN CONFORMS WITH APPLICABLE PROVISIONS OF NDS (NATIONAL DESIGN SPEC. BY AF&PA) AND TPI. ITW BCG CONNECTOR PLATES ARE MADE OF 20/18/16GA (W,H/SS/K) ASTM A653 GRADE 40/60 (W, K/H,SS) GALV. STEEL. APPLY PLATES TO EACH FACE OF TRUSS AND, UNLESS OTHERWISE LOCATED ON THIS DESIGN, POSITION PER DRAWINGS 160A-Z. ANY INSPECTION OF PLATES FOLLOWED BY (1) SHALL BE PER ANNEX A3 OF TPI1-2002 SEC.3. A SEAL ON THIS DRAWING INDICATES ACCEPTANCE OF PROFESSIONAL ENGINEERING RESPONSIBILITY SOLELY FOR THE TRUSS COMPONENT DESIGN SHOWN. THE SUITABILITY AND USE OF THIS COMPONENT FOR ANY BUILDING IS THE RESPONSIBILITY OF THE BUILDING DESIGNER PER ANSI/TPI 1 SEC. 2.

JAMES F. COLLINS, JR. LICENSED No. 52212 STATE OF FLORIDA PROFESSIONAL ENGINEER

Dec

TC LL	20.0 PSF	REF R215-- 96019
TC DL	10.0 PSF	DATE 12/17/07
BC DL	10.0 PSF	DRW HCUSR215 07351041
BC LL	0.0 PSF	HC-ENG WHK/WHK
TOT.LD.	40.0 PSF	SEQN- 89406
DUR.FAC.	1.25	FROM LRB
SPACING	24.0"	JREF- 1TDD215_Z02

ASCE 7-02: 110 MPH WIND SPEED, 15' MEAN HEIGHT, ENCLOSED, I = 1.00, EXPOSURE C

MAX GABLE VERTICAL LENGTH

2X4 GABLE VERTICAL SPACING	SPECIES	BRACE GRADE	NO BRACES	(1) 1X4 "L" BRACE * GROUP A	(1) 1X4 "L" BRACE * GROUP B	(1) 2X4 "L" BRACE * GROUP A	(1) 2X4 "L" BRACE * GROUP B	(2) 2X4 "L" BRACE ** GROUP A	(2) 2X4 "L" BRACE ** GROUP B	(1) 2X6 "L" BRACE * GROUP A	(1) 2X6 "L" BRACE * GROUP B	(2) 2X6 "L" BRACE ** GROUP A	(2) 2X6 "L" BRACE ** GROUP B
24" O.C.	SPF HF	#1 / #2	3' 10"	6' 8"	6' 10"	7' 11"	8' 1"	9' 5"	9' 8"	12' 5"	12' 9"	14' 0"	14' 0"
		#3	3' 9"	6' 0"	6' 0"	7' 11"	7' 11"	9' 5"	9' 5"	12' 4"	12' 4"	14' 0"	14' 0"
		STUD	3' 9"	6' 0"	6' 0"	7' 11"	7' 11"	9' 5"	9' 5"	12' 3"	12' 3"	14' 0"	14' 0"
		STANDARD	3' 9"	5' 2"	5' 2"	6' 9"	6' 9"	9' 1"	9' 1"	10' 7"	10' 7"	14' 0"	14' 0"
	SP DFL	#1	4' 3"	6' 8"	7' 2"	7' 11"	8' 6"	9' 5"	10' 2"	12' 5"	13' 5"	14' 0"	14' 0"
		#2	4' 2"	6' 8"	7' 2"	7' 11"	8' 6"	9' 5"	10' 2"	12' 5"	13' 5"	14' 0"	14' 0"
		#3	4' 0"	6' 2"	6' 2"	7' 11"	8' 1"	9' 5"	9' 11"	12' 5"	12' 8"	14' 0"	14' 0"
		STUD	4' 0"	6' 1"	6' 1"	7' 11"	8' 0"	9' 5"	9' 11"	12' 5"	12' 6"	14' 0"	14' 0"
		STANDARD	3' 10"	5' 3"	5' 3"	6' 11"	6' 11"	9' 4"	9' 4"	10' 10"	10' 10"	14' 0"	14' 0"
16" O.C.	SPF HF	#1 / #2	4' 5"	7' 8"	7' 10"	9' 1"	9' 4"	10' 10"	11' 1"	14' 0"	14' 0"	14' 0"	14' 0"
		#3	4' 4"	7' 4"	7' 4"	9' 1"	9' 1"	10' 10"	10' 10"	14' 0"	14' 0"	14' 0"	14' 0"
		STUD	4' 4"	7' 4"	7' 4"	9' 1"	9' 1"	10' 10"	10' 10"	14' 0"	14' 0"	14' 0"	14' 0"
		STANDARD	4' 4"	6' 4"	6' 4"	8' 4"	8' 4"	10' 10"	10' 10"	12' 11"	12' 11"	14' 0"	14' 0"
	SP DFL	#1	4' 10"	7' 8"	8' 3"	9' 1"	9' 9"	10' 10"	11' 8"	14' 0"	14' 0"	14' 0"	14' 0"
		#2	4' 9"	7' 8"	8' 3"	9' 1"	9' 9"	10' 10"	11' 8"	14' 0"	14' 0"	14' 0"	14' 0"
		#3	4' 6"	7' 7"	7' 7"	9' 1"	9' 6"	10' 10"	11' 4"	14' 0"	14' 0"	14' 0"	14' 0"
		STUD	4' 6"	7' 6"	7' 6"	9' 1"	9' 6"	10' 10"	11' 4"	14' 0"	14' 0"	14' 0"	14' 0"
		STANDARD	4' 5"	6' 5"	6' 5"	8' 6"	8' 6"	10' 10"	11' 1"	13' 3"	13' 3"	14' 0"	14' 0"
12" O.C.	SPF HF	#1 / #2	4' 11"	8' 5"	8' 8"	10' 0"	10' 3"	11' 11"	12' 3"	14' 0"	14' 0"	14' 0"	14' 0"
		#3	4' 9"	8' 5"	8' 5"	10' 0"	10' 0"	11' 11"	11' 11"	14' 0"	14' 0"	14' 0"	14' 0"
		STUD	4' 9"	8' 5"	8' 5"	10' 0"	10' 0"	11' 11"	11' 11"	14' 0"	14' 0"	14' 0"	14' 0"
		STANDARD	4' 9"	7' 3"	7' 3"	9' 7"	9' 7"	11' 11"	11' 11"	14' 0"	14' 0"	14' 0"	14' 0"
	SP DFL	#1	5' 4"	8' 5"	9' 1"	10' 0"	10' 9"	11' 11"	12' 10"	14' 0"	14' 0"	14' 0"	14' 0"
		#2	5' 3"	8' 5"	9' 1"	10' 0"	10' 9"	11' 11"	12' 10"	14' 0"	14' 0"	14' 0"	14' 0"
		#3	5' 0"	8' 5"	8' 5"	10' 0"	10' 6"	11' 11"	12' 6"	14' 0"	14' 0"	14' 0"	14' 0"
		STUD	5' 0"	8' 5"	8' 7"	10' 0"	10' 6"	11' 11"	12' 6"	14' 0"	14' 0"	14' 0"	14' 0"
		STANDARD	4' 11"	7' 5"	7' 5"	9' 10"	9' 10"	11' 11"	12' 3"	14' 0"	14' 0"	14' 0"	14' 0"

BRACING GROUP SPECIES AND GRADES: *

GROUP A:

SPRUCE-PINE-FIR

#1 / #2	STANDARD
#3	STUD

HEM-FIR

#2	STUD
#3	STANDARD

DOUGLAS FIR-LARCH

#3
STUD
STANDARD

SOUTHERN PINE

#3
STUD
STANDARD

GROUP B:

HEM-FIR

#1 & BTR
#1

SOUTHERN PINE

#1
#2

DOUGLAS FIR-LARCH

#1
#2

GABLE TRUSS DETAIL NOTES:

LIVE LOAD DEFLECTION CRITERIA IS L/240.

PROVIDE UPLIFT CONNECTIONS FOR 80 PLF OVER CONTINUOUS BEARING (5 PSF TC DEAD LOAD).

GABLE END SUPPORTS LOAD FROM 4' 0" OUTLOOKERS WITH 2' 0" OVERHANG, OR 12" PLYWOOD OVERHANG.

ATTACH EACH "L" BRACE WITH 10d NAILS.
* FOR (1) "L" BRACE: SPACE NAILS AT 2" O.C. IN 18" END ZONES AND 4" O.C. BETWEEN ZONES.
** FOR (2) "L" BRACES: SPACE NAILS AT 3" O.C. IN 18" END ZONES AND 6" O.C. BETWEEN ZONES.

"L" BRACING MUST BE A MINIMUM OF 80% OF WEB MEMBER LENGTH.

GABLE VERTICAL PLATE SIZES

VERTICAL LENGTH	NO SPLICE
LESS THAN 4' 0"	1X4 OR 2X3
GREATER THAN 4' 0", BUT LESS THAN 11' 6"	2X4
GREATER THAN 11' 6"	2.5X4

+ REFER TO COMMON TRUSS DESIGN FOR PEAK, SPLICE, AND HEEL PLATES.

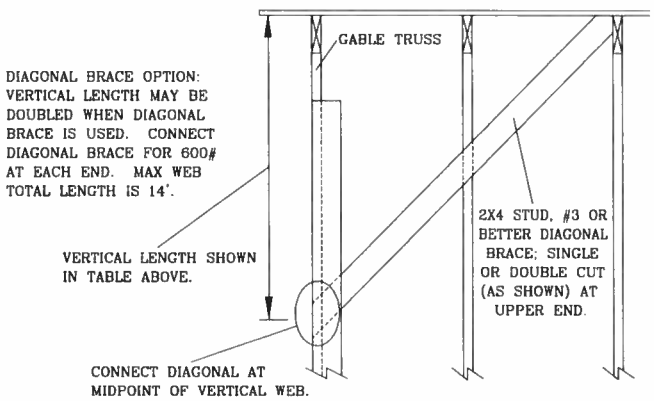

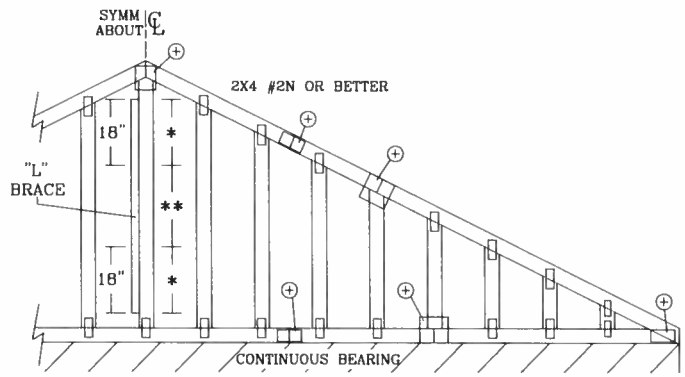

REFER TO CHART ABOVE FOR MAX GABLE VERTICAL LENGTH.

ALPINE

ITW BUILDING COMPONENTS GROUP, INC.
POMPANO BEACH, FLORIDA

WARNING TRUSSES REQUIRE EXTREME CARE IN FABRICATING, HANDLING, SHIPPING, INSTALLING AND BRACING. REFER TO BCSI (BUILDING COMPONENT SAFETY INFORMATION), PUBLISHED BY TPI (TRUSS PLATE INSTITUTE, 218 NORTH LEE STR., SUITE 312, ALEXANDRIA, VA. 22314) AND WTCA (WOOD TRUSS COUNCIL OF AMERICA, 6300 ENTERPRISE LN, MADISON, WI 53719) FOR SAFETY PRACTICES PRIOR TO PERFORMING THESE FUNCTIONS. UNLESS OTHERWISE INDICATED, TOP CHORD SHALL HAVE PROPERLY ATTACHED STRUCTURAL PANELS AND BOTTOM CHORD SHALL HAVE A PROPERLY ATTACHED RIGID CEILING.

IMPORTANT FURNISH COPY OF THIS DESIGN TO INSTALLATION CONTRACTOR. ITW BCG, INC. SHALL NOT BE RESPONSIBLE FOR ANY DEVIATION FROM THIS DESIGN; ANY FAILURE TO BUILD THE TRUSS IN CONFORMANCE WITH TPI; OR FABRICATING, HANDLING, SHIPPING, INSTALLING & BRACING OF TRUSSES. DESIGN CONFORMS WITH APPLICABLE PROVISIONS OF NDS (NATIONAL DESIGN SPEC. BY AF&PA) AND TPI. ITW, BCG CONNECTOR PLATES ARE MADE OF 20/18/16GA (W,H/SS/K) ASTM A653 GRADE 40/60 (W,K/H/SS) GALV. STEEL. APPLY PLATES TO EACH FACE OF TRUSS AND, UNLESS OTHERWISE LOCATED ON THIS DESIGN, POSITION PER DRAWINGS 160A-Z. ANY INSPECTION OF PLATES FOLLOWED BY (1) SHALL BE PER ANNEX A3 OF TPI 1-2002 SEC. 3. A SEAL ON THIS DRAWING INDICATES ACCEPTANCE OF PROFESSIONAL ENGINEERING RESPONSIBILITY SOLELY FOR THE TRUSS COMPONENT DESIGN SHOWN. THE SUITABILITY AND USE OF THIS COMPONENT FOR ANY BUILDING IS THE RESPONSIBILITY OF THE BUILDING DESIGNER, PER ANSI/TPI 1 SEC. 2.

Dec 14 '07

JAMES F. COLLINS, JR. LICENSE No. 52212 STATE OF FLORIDA PROFESSIONAL ENGINEER

MAX. TOT. LD. 60 PSF

MAX. SPACING 24.0"

REF	ASCE7-02-GAB11015
DATE	2/23/07
DRWG	A11015EE0207
-ENG	

GABLE DETAIL
FOR LET-IN VERTICALS

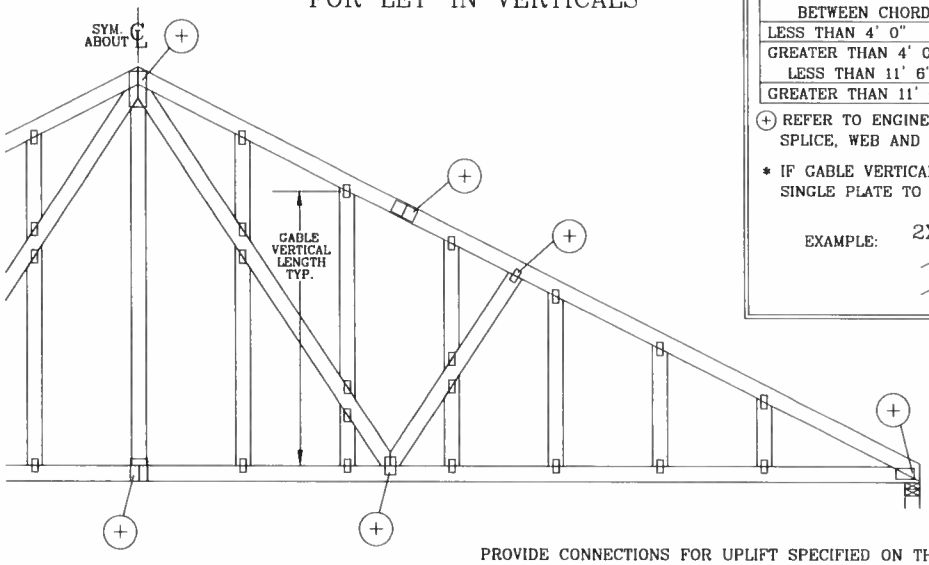

GABLE VERTICAL PLATE SIZES		
VERTICAL LENGTH BETWEEN CHORDS	PLATE SIZE	IF PLATES OVERLAP*
LESS THAN 4' 0"	1X4 OR 2X3	2X8
GREATER THAN 4' 0", BUT LESS THAN 11' 6"	2X4	2X8
GREATER THAN 11' 6"	2.5X4	2.5X8

(+) REFER TO ENGINEERED TRUSS DESIGN FOR PEAK, SPLICE, WEB AND HEEL PLATES.

* IF GABLE VERTICAL PLATES OVERLAP, USE A SINGLE PLATE TO SPAN THE WEB.

EXAMPLE:

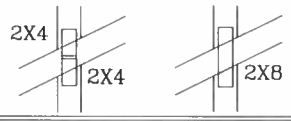

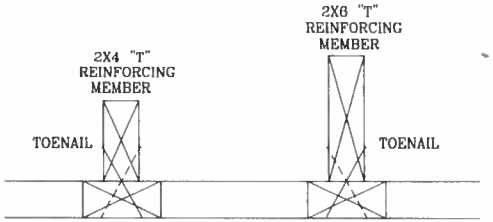

TO CONVERT FROM "L" TO "T" REINFORCING MEMBERS, MULTIPLY "T" FACTOR BY LENGTH (BASED ON GABLE VERTICAL SPECIES, GRADE AND SPACING) FOR (1) 2X4 "L" BRACE, GROUP A, OBTAINED FROM THE APPROPRIATE ALPINE GABLE DETAIL FOR ASCE OR SBCCI WIND LOAD.

MAXIMUM ALLOWABLE "T" REINFORCED GABLE VERTICAL LENGTH IS 14' FROM TOP TO BOTTOM CHORD.

WEB LENGTH INCREASE W/ "T" BRACE

WIND SPEED AND MRH	"T" REINF. MBR. SIZE	SBCCI	ASCE
110 MPH	2x4	10 %	10 %
15 FT	2x6	40 %	50 %
110 MPH	2x4	10 %	10 %
30 FT	2x6	50 %	50 %
100 MPH	2x4	10 %	10 %
15 FT	2x6	30 %	50 %
100 MPH	2x4	10 %	10 %
30 FT	2x6	40 %	40 %
90 MPH	2x4	20 %	10 %
15 FT	2x6	20 %	40 %
90 MPH	2x4	10 %	10 %
30 FT	2x6	30 %	50 %
80 MPH	2x4	10 %	20 %
15 FT	2x6	10 %	30 %
80 MPH	2x4	20 %	10 %
30 FT	2x6	20 %	40 %
70 MPH	2x4	0 %	20 %
15 FT	2x6	0 %	20 %
70 MPH	2x4	10 %	20 %
30 FT	2x6	10 %	30 %

EXAMPLE:
ASCE WIND SPEED = 100 MPH
MEAN ROOF HEIGHT = 30 FT
GABLE VERTICAL = 24" O.C. SP #3
"T" REINFORCING MEMBER SIZE = 2X4
"T" BRACE INCREASE (FROM ABOVE) = 10% = 1.10
(1) 2X4 "L" BRACE LENGTH = 6' 7"
MAXIMUM "T" REINFORCED GABLE VERTICAL LENGTH
1.10 x 6' 7" = 7' 3"

PROVIDE CONNECTIONS FOR UPLIFT SPECIFIED ON THE ENGINEERED TRUSS DESIGN.

ATTACH EACH "T" REINFORCING MEMBER WITH
HAND DRIVEN NAILS:
10d COMMON (0.148"X 3.",MIN) TOENAILS AT 4" O.C. PLUS
(4) 16d COMMON (0.162" X 3.5",MIN) TOENAILS IN TOP AND BOTTOM CHORD.

GUN DRIVEN NAILS:
8d COMMON (0.131"X 2.5",MIN) TOENAILS AT 4" O.C. PLUS
(4) TOENAILS IN TOP AND BOTTOM CHORD.

THIS DETAIL TO BE USED WITH THE APPROPRIATE ALPINE GABLE DETAIL FOR ASCE OR SBCCI WIND LOAD.

ASCE 7-93 GABLE DETAIL DRAWINGS
A11015EN0207, A10015EN0207, A09015EN0207, A08015EN0207, A07015EN0207, A11030EN0207, A10030EN0207, A09030EN0207, A08030EN0207, A07030EN0207

ASCE 7-98 GABLE DETAIL DRAWINGS
A13015EC0207, A12015EC0207, A11015EC0207, A10015EC0207, A08515EC0207, A13030EC0207, A12030EC0207, A11030EC0207, A10030EC0207, A08530EC0207

ASCE 7-02 GABLE DETAIL DRAWINGS
A13015EE0207, A12015EE0207, A11015EE0207, A10015EE0207, A08515EE0207, A13030EE0207, A12030EE0207, A11030EE0207, A10030EE0207, A08530EE0207

ASCE 7-05 GABLE DETAIL DRAWINGS
A13015E50207, A12015E50207, A11015E50207, A10015E50207, A08515E50207, A13030E50207, A12030E50207, A11030E50207, A10030E50207, A08530E50207

SEE APPROPRIATE ALPINE GABLE DETAIL (ASCE OR SBCCI WIND LOAD) FOR MAXIMUM UNREINFORCED GABLE VERTICAL LENGTH.

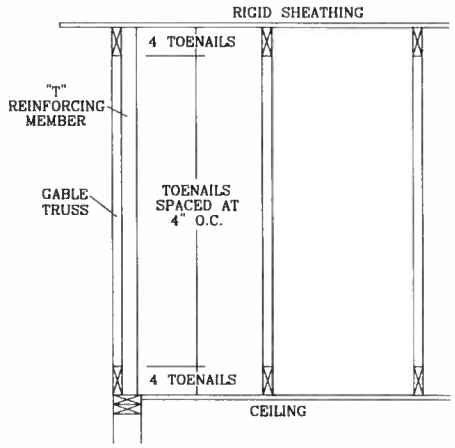

THIS DRAWING REPLACES DRAWINGS GAB98117 876,719 & HC26294035

ALPINE
ITW BUILDING COMPONENTS GROUP, INC.
POMPANO BEACH, FLORIDA

WARNING TRUSSES REQUIRE EXTREME CARE IN FABRICATING, HANDLING, SHIPPING, INSTALLING AND BRACING. REFER TO BCSI (BUILDING COMPONENT SAFETY INFORMATION), PUBLISHED BY TPI (TRUSS PLATE INSTITUTE, 218 NORTH LEE STR., SUITE 312, ALEXANDRIA, VA. 22314) AND WTCA (WOOD TRUSS COUNCIL OF AMERICA, 6300 ENTERPRISE LN, MADISON, WI 53719) FOR SAFETY PRACTICES PRIOR TO PERFORMING THESE FUNCTIONS. UNLESS OTHERWISE INDICATED, TOP CHORD SHALL HAVE PROPERLY ATTACHED STRUCTURAL PANELS AND BOTTOM CHORD SHALL HAVE A PROPERLY ATTACHED RIGID CEILING.

IMPORTANT FURNISH COPY OF THIS DESIGN TO INSTALLATION CONTRACTOR. ITW BCG, INC., SHALL NOT BE RESPONSIBLE FOR ANY DEVIATION FROM THIS DESIGN; ANY FAILURE TO BUILD THE TRUSS IN CONFORMANCE WITH TPI; OR FABRICATING, HANDLING, SHIPPING, INSTALLING & BRACING OF TRUSSES. DESIGN CONFORMS WITH APPLICABLE PROVISIONS OF NDS (NATIONAL DESIGN SPEC, BY AF&PA) AND TPI. ITW, BCG CONNECTOR PLATES ARE MADE OF 20/18/16GA (W,H/SS/K) ASTM A653 GRADE 40/60 (W,K/H,SS) GALV. STEEL. APPLY PLATES TO EACH FACE OF TRUSS AND, UNLESS OTHERWISE LOCATED ON THIS DESIGN, POSITION PER DRAWINGS 160A-Z. ANY INSPECTION OF PLATES FOLLOWED BY (I) SHALL BE PER ANNEX A3 OF TPI 1-2002 SEC. 3. A SEAL ON THIS DRAWING INDICATES ACCEPTANCE OF PROFESSIONAL ENGINEERING RESPONSIBILITY SOLELY FOR THE TRUSS COMPONENT DESIGN SHOWN. THE SUITABILITY AND USE OF THIS COMPONENT FOR ANY BUILDING IS THE RESPONSIBILITY OF THE BUILDING DESIGNER, PER ANSI/TPI 1 SEC. 2.

DEC 07

JAMES E. COLLINS, JR. LICENSE No. 52212 STATE OF FLORIDA PROFESSIONAL ENGINEER

MAX TOT. LD. 60 PSF
DUR. FAC. ANY
MAX SPACING 24.0"

REF	LET-IN VERT
DATE	2/23/07
DRWG	GBLLETIN0207
-ENG	DLJ/KAR

BEARING BLOCK NAIL SPACING DETAIL

MINIMUM SPACING FOR SINGLE BEARING BLOCK IS SHOWN. DOUBLE NAIL SPACINGS AND STAGGER NAILING FOR TWO BLOCKS. GREATER SPACING MAY BE REQUIRED TO AVOID SPLITTING.

A – EDGE DISTANCE AND SPACING BETWEEN STAGGERED ROWS OF NAILS (6 NAIL DIAMETERS)
B – SPACING OF NAILS IN A ROW (12 NAIL DIAMETERS)
C – END DISTANCE (15 NAIL DIAMETERS)

IF NAIL HOLES ARE PREBORED, SOME SPACING MAY BE REDUCED BY THE AMOUNTS GIVEN BELOW:
- • SPACING MAY BE REDUCED BY 50%
- •• SPACING MAY BE REDUCED BY 33%

BEARING BLOCK TO BE SAME SIZE AND SPECIES AS BOTTOM CHORD. BLOCKS MAY BE ANY GRADE WITHIN THE SPECIES, PROVIDED THE COMPRESSION PERPENDICULAR TO GRAIN VALUE (Fc–perp) IS AT LEAST THAT OF THE CHORD.

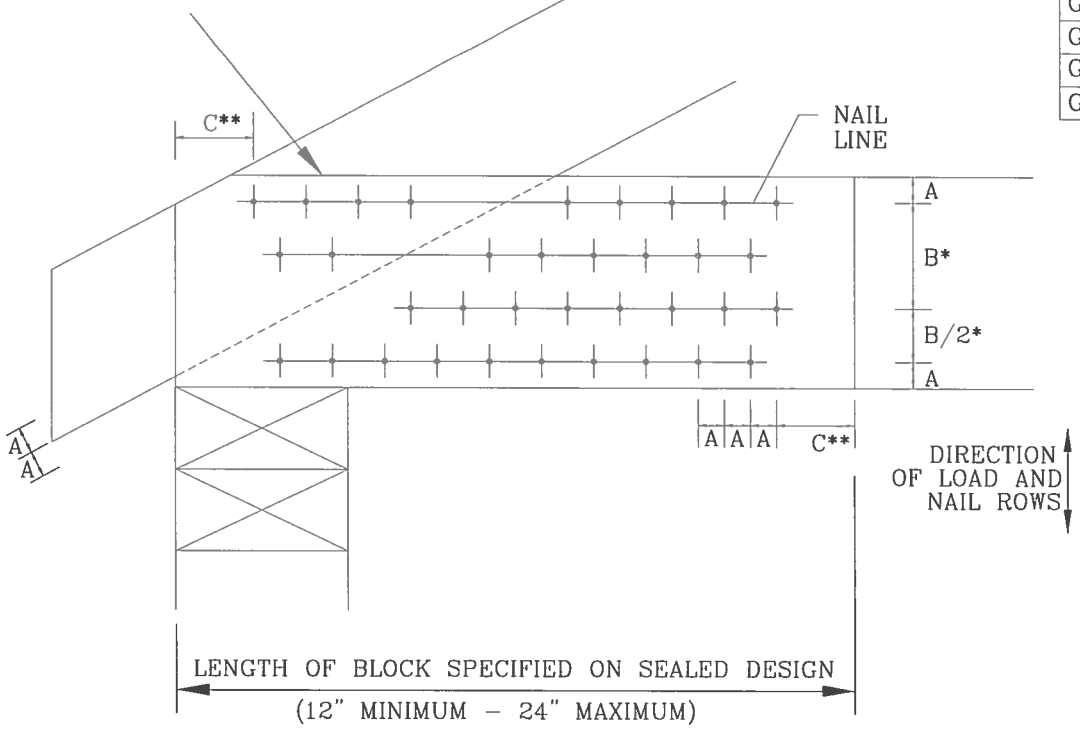

MAXIMUM NUMBER OF NAIL LINES PARALLEL TO GRAIN

NAIL TYPE	CHORD SIZE 2X4	2X6	2X8	2X10	2X12
8d BOX (0.113"X 2.5",MIN)	3	6	9	12	15
10d BOX (0.128"X 3.",MIN)	3	5	7	10	12
12d BOX (0.128"X 3.25",MIN)	3	5	7	10	12
16d BOX (0.135"X 3.5",MIN)	3	5	7	10	12
20d BOX (0.148"X 4.",MIN)	2	4	5	6	8
8d COMMON (0.131"X 2.5",MIN)	3	5	7	10	12
10d COMMON (0.148"X 3.",MIN)	2	4	6	8	10
12d COMMON (0.148"X 3.25",MIN)	2	4	6	8	10
16d COMMON (0.162"X 3.5",MIN)	2	4	6	8	10
GUN (0.120"X 2.5",MIN)	3	6	8	11	14
GUN (0.131"X 2.5",MIN)	3	5	7	10	12
GUN (0.120"X 3.",MIN)	3	6	8	11	14
GUN (0.131"X 3.",MIN)	3	5	7	10	12

MINIMUM NAIL SPACING DISTANCES

NAIL TYPE	DISTANCES A	B*	C**
8d BOX (0.113"X 2.5",MIN)	3/4"	1 3/8"	1 3/4"
10d BOX (0.128"X 3.",MIN)	7/8"	1 5/8"	2"
12d BOX (0.128"X 3.25",MIN)	7/8"	1 5/8"	2"
16d BOX (0.135"X 3.5",MIN)	7/8"	1 5/8"	2 1/8"
20d BOX (0.148"X 4.",MIN)	1"	1 7/8"	2 1/4"
8d COMMON (0.131"X 2.5",MIN)	7/8"	1 5/8"	2"
10d COMMON (0.148"X 3.",MIN)	1"	1 7/8"	2 1/4"
12d COMMON (0.148"X 3.25",MIN)	1"	1 7/8"	2 1/4"
16d COMMON (0.162"X 3.5",MIN)	1'	2"	2 1/2"
GUN (0.120"X 2.5",MIN)	3/4"	1 1/2"	1 7/8"
GUN (0.131"X 2.5",MIN)	7/8"	1 5/8"	2"
GUN (0.120"X 3.",MIN)	3/4"	1 1/2"	1 7/8"
GUN (0.131"X 3.",MIN)	7/8"	1 5/8"	2"

THIS DRAWING REPLACES DRAWING B139 AND CNBRGBLK0699

ALPINE
ITW BUILDING COMPONENTS GROUP, INC.
POMPANO BEACH, FLORIDA

WARNING TRUSSES REQUIRE EXTREME CARE IN FABRICATING, HANDLING, SHIPPING, INSTALLING AND BRACING. REFER TO BCSI (BUILDING COMPONENT SAFETY INFORMATION), PUBLISHED BY TPI (TRUSS PLATE INSTITUTE, 218 NORTH LEE STR., SUITE 312 ALEXANDRIA, VA. 22314) AND WTCA (WOOD TRUSS COUNCIL OF AMERICA, 6300 ENTERPRISE LN, MADISON, WI 53719) FOR SAFETY PRACTICES PRIOR TO PERFORMING THESE FUNCTIONS. UNLESS OTHERWISE INDICATED, TOP CHORD SHALL HAVE PROPERLY ATTACHED STRUCTURAL PANELS AND BOTTOM CHORD SHALL HAVE A PROPERLY ATTACHED RIGID CEILING.

IMPORTANT FURNISH COPY OF THIS DESIGN TO INSTALLATION CONTRACTOR. ITW BCG, INC., SHALL NOT BE RESPONSIBLE FOR ANY DEVIATION FROM THIS DESIGN; ANY FAILURE TO BUILD THE TRUSS IN CONFORMANCE WITH TPI; OR FABRICATING, HANDLING, SHIPPING, INSTALLING & BRACING OF TRUSSES. DESIGN CONFORMS WITH APPLICABLE PROVISIONS OF NDS (NATIONAL DESIGN SPEC, BY AF&PA) AND TPI. ITW, BCG CONNECTOR PLATES ARE MADE OF 20/18/16GA (W,H/SS/K) ASTM A653 GRADE 40/60 (W,K/H,SS) GALV. STEEL. APPLY PLATES TO EACH FACE OF TRUSS AND, UNLESS OTHERWISE LOCATED ON THIS DESIGN, POSITION PER DRAWINGS 160A-Z. ANY INSPECTION OF PLATES FOLLOWED BY (I) SHALL BE PER ANNEX A3 OF TPI 1-2002 SEC. 3. A SEAL ON THIS DRAWING INDICATES ACCEPTANCE OF PROFESSIONAL ENGINEERING RESPONSIBILITY SOLELY FOR THE TRUSS COMPONENT DESIGN SHOWN. THE SUITABILITY AND USE OF THIS COMPONENT FOR ANY BUILDING IS THE RESPONSIBILITY OF THE BUILDING DESIGNER, PER ANSI/TPI 1 SEC. 2.

Dec 17 '07

JAMES F. COLLINS, JR. LICENSE No. 52212 STATE OF FLORIDA PROFESSIONAL ENGINEER

REF	BEARING BLOCK
DATE	2/23/07
DRWG	CNBRGBLK0207
–ENG	SJP/KAR

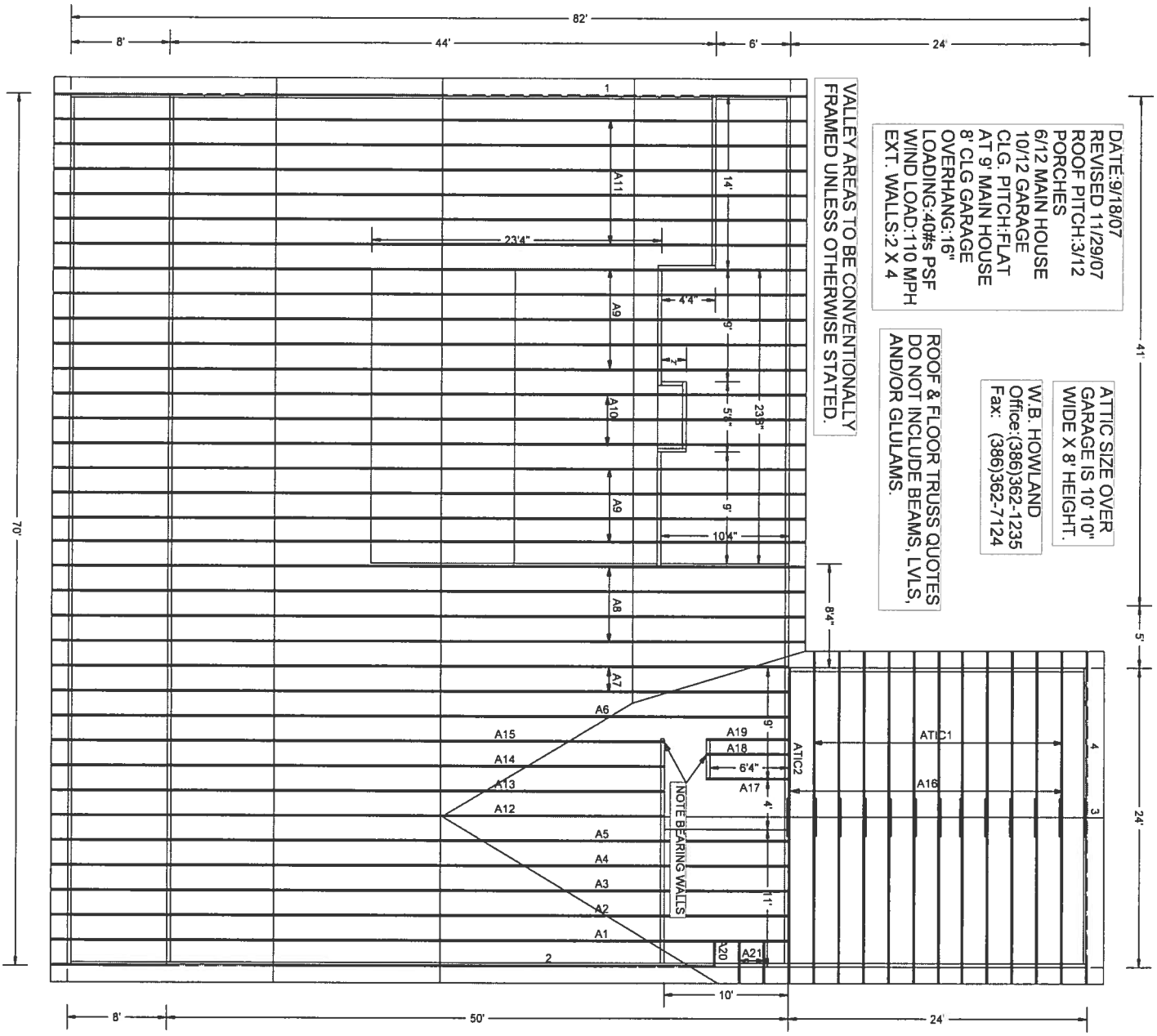

Job Name: THERESA BARBALE
Customer: OWNER BUILDER
Designer: Lynn Bell

JOB NO: 4909

PAGE NO: 1 OF 1

Residential System Sizing Calculation

Summary

Barbale Residence
SW Cozy Glen
Lake City, FL 32025-

Project Title:
Jim & Theresa Barbale

Code Only
Professional Version
Climate: North

12/13/2007

Location for weather data: Gainesville - Defaults: Latitude(29) Altitude(152 ft.) Temp Range(M)
Humidity data: Interior RH (50%) Outdoor wet bulb (77F) Humidity difference(54gr.)

Winter design temperature	33	F	Summer design temperature	92	F
Winter setpoint	70	F	Summer setpoint	75	F
Winter temperature difference	37	F	Summer temperature difference	17	F
Total heating load calculation	**44663**	**Btuh**	**Total cooling load calculation**	**55603**	**Btuh**
Submitted heating capacity	% of calc	Btuh	Submitted cooling capacity	% of calc	Btuh
Total (Electric Heat Pump)	116.4	52000	Sensible (SHR = 0.75)	97.5	39000
Heat Pump + Auxiliary(0.0kW)	116.4	52000	Latent	83.3	13000
			Total (Electric Heat Pump)	93.5	52000

WINTER CALCULATIONS

Winter Heating Load (for 3073 sqft)

Load component			Load	
Window total	197	sqft	6352	Btuh
Wall total	2031	sqft	6669	Btuh
Door total	40	sqft	518	Btuh
Ceiling total	3150	sqft	3712	Btuh
Floor total	252	sqft	4121	Btuh
Infiltration	369	cfm	14937	Btuh
Duct loss			8354	Btuh
Subtotal			**44663**	**Btuh**
Ventilation	0	cfm	0	Btuh
TOTAL HEAT LOSS			**44663**	**Btuh**

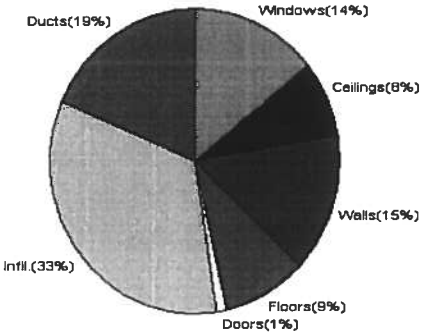

SUMMER CALCULATIONS

Summer Cooling Load (for 3073 sqft)

Load component			Load	
Window total	197	sqft	9510	Btuh
Wall total	2031	sqft	4123	Btuh
Door total	40	sqft	392	Btuh
Ceiling total	3150	sqft	5217	Btuh
Floor total			0	Btuh
Infiltration	323	cfm	6005	Btuh
Internal gain			4240	Btuh
Duct gain			10516	Btuh
Sens. Ventilation	0	cfm	0	Btuh
Total sensible gain			**40002**	**Btuh**
Latent gain(ducts)			2209	Btuh
Latent gain(infiltration)			11792	Btuh
Latent gain(ventilation)			0	Btuh
Latent gain(internal/occupants/other)			1600	Btuh
Total latent gain			**15601**	**Btuh**
TOTAL HEAT GAIN			**55603**	**Btuh**

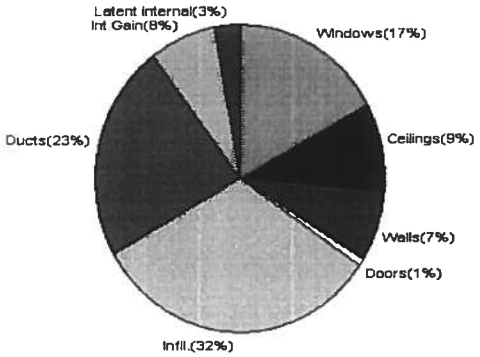

Version 8
For Florida residences only

EnergyGauge® System Sizing
PREPARED BY: _____
DATE: 12·13·07

System Sizing Calculations - Winter

Residential Load - Whole House Component Details

Barbale Residence
SW Cozy Glen
Lake City, FL 32025-

Project Title:
Jim & Theresa Barbale

Code Only
Professional Version
Climate: North

Reference City: Gainesville (Defaults) Winter Temperature Difference: 37.0 F

12/13/2007

Component Loads for Whole House

Window	Panes/SHGC/Frame/U	Orientation	Area(sqft) X	HTM=	Load
1	2, Clear, Metal, 0.87	W	15.0	32.2	483 Btuh
2	2, Clear, Metal, 0.87	W	15.0	32.2	483 Btuh
3	2, Clear, Metal, 0.87	W	20.0	32.2	644 Btuh
4	2, Clear, Metal, 0.87	W	9.0	32.2	290 Btuh
5	2, Clear, Metal, 0.87	N	16.0	32.2	515 Btuh
6	2, Clear, Metal, 0.87	N	15.0	32.2	483 Btuh
7	2, Clear, Metal, 0.87	E	60.0	32.2	1931 Btuh
8	2, Clear, Metal, 0.87	E	13.3	32.2	429 Btuh
9	2, Clear, Metal, 0.87	S	30.0	32.2	966 Btuh
10	2, Clear, Metal, 0.87	S	4.0	32.2	129 Btuh
	Window Total		197(sqft)		6352 Btuh
Walls	Type	R-Value	Area X	HTM=	Load
1	Frame - Wood - Ext(0.09)	13.0	1835	3.3	6025 Btuh
2	Frame - Wood - Adj(0.09)	13.0	196	3.3	644 Btuh
	Wall Total		2031		6669 Btuh
Doors	Type		Area X	HTM=	Load
1	Insulated - Exterior		20	12.9	259 Btuh
2	Insulated - Adjacent		20	12.9	259 Btuh
	Door Total		40		518Btuh
Ceilings	Type/Color/Surface	R-Value	Area X	HTM=	Load
1	Vented Attic/D/Shin	30.0	3150	1.2	3712 Btuh
	Ceiling Total		3150		3712Btuh
Floors	Type	R-Value	Size X	HTM=	Load
1	Slab On Grade	5	252.0 ft(p)	16.4	4121 Btuh
	Floor Total		252		4121 Btuh
			Envelope Subtotal:		21372 Btuh
Infiltration	Type	ACH X	Volume(cuft)	walls(sqft)	CFM=
	Natural	0.80	27657	2031	368.8
					14937 Btuh
Ductload				(DLM of 0.230)	8354 Btuh
All Zones			**Sensible Subtotal All Zones**		**44663 Btuh**

Manual J Winter Calculations

Residential Load - Component Details (continued)

Barbale Residence
SW Cozy Glen
Lake City, FL 32025-

Project Title:
Jim & Theresa Barbale

Code Only
Professional Version
Climate: North

12/13/2007

WHOLE HOUSE TOTALS

	Subtotal Sensible	44663 Btuh
	Ventilation Sensible	0 Btuh
	Total Btuh Loss	44663 Btuh

EQUIPMENT

1. Electric Heat Pump	#	26000 Btuh
2. Electric Heat Pump	#	26000 Btuh

Key: Window types (SHGC - Shading coefficient of glass as SHGC numerical value or as clear or tint)
(Frame types - metal, wood or insulated metal)
(U - Window U-Factor or 'DEF' for default)
(HTM - ManualJ Heat Transfer Multiplier)
Key: Floor size (perimeter(p) for slab-on-grade or area for all other floor types)

Version 8
For Florida residences only

System Sizing Calculations - Winter

Residential Load - Room by Room Component Details

Barbale Residence
SW Cozy Glen
Lake City, FL 32025-

Project Title:
Jim & Theresa Barbale

Code Only
Professional Version
Climate: North

Reference City: Gainesville (Defaults) Winter Temperature Difference: 37.0 F

12/13/2007

Component Loads for Zone #1: Main

Window	Panes/SHGC/Frame/U	Orientation	Area(sqft) X	HTM=	Load
1	2, Clear, Metal, 0.87	W	15.0	32.2	483 Btuh
2	2, Clear, Metal, 0.87	W	15.0	32.2	483 Btuh
3	2, Clear, Metal, 0.87	W	20.0	32.2	644 Btuh
4	2, Clear, Metal, 0.87	W	9.0	32.2	290 Btuh
5	2, Clear, Metal, 0.87	N	16.0	32.2	515 Btuh
6	2, Clear, Metal, 0.87	N	15.0	32.2	483 Btuh
7	2, Clear, Metal, 0.87	E	60.0	32.2	1931 Btuh
8	2, Clear, Metal, 0.87	E	13.3	32.2	429 Btuh
9	2, Clear, Metal, 0.87	S	30.0	32.2	966 Btuh
10	2, Clear, Metal, 0.87	S	4.0	32.2	129 Btuh
	Window Total		197(sqft)		6352 Btuh
Walls	Type	R-Value	Area X	HTM=	Load
1	Frame - Wood - Ext(0.09)	13.0	1835	3.3	6025 Btuh
2	Frame - Wood - Adj(0.09)	13.0	196	3.3	644 Btuh
	Wall Total		2031		6669 Btuh
Doors	Type		Area X	HTM=	Load
1	Insulated - Exterior		20	12.9	259 Btuh
2	Insulated - Adjacent		20	12.9	259 Btuh
	Door Total		40		518Btuh
Ceilings	Type/Color/Surface	R-Value	Area X	HTM=	Load
1	Vented Attic/D/Shin	30.0	3150	1.2	3712 Btuh
	Ceiling Total		3150		3712Btuh
Floors	Type	R-Value	Size X	HTM=	Load
1	Slab On Grade	5	252.0 ft(p)	16.4	4121 Btuh
	Floor Total		252		4121 Btuh
			Zone Envelope Subtotal:		21372 Btuh
Infiltration	Type	ACH X	Volume(cuft)	walls(sqft)	CFM=
	Natural	0.80	27657	2031	368.8	14937 Btuh
Ductload	Average sealed, Supply(R6.0-Attic), Return(R6.0-Attic) (DLM of 0.230)				8354 Btuh
Zone #1			**Sensible Zone Subtotal**		**44663 Btuh**

Manual J Winter Calculations

Residential Load - Component Details (continued)

Barbale Residence
SW Cozy Glen
Lake City, FL 32025-

Project Title:
Jim & Theresa Barbale

Code Only
Professional Version
Climate: North

12/13/2007

WHOLE HOUSE TOTALS

	Subtotal Sensible	44663 Btuh
	Ventilation Sensible	0 Btuh
	Total Btuh Loss	44663 Btuh

EQUIPMENT

1. Electric Heat Pump	#	26000 Btuh
2. Electric Heat Pump	#	26000 Btuh

Key: Window types (SHGC - Shading coefficient of glass as SHGC numerical value or as clear or tint)
(Frame types - metal, wood or insulated metal)
(U - Window U-Factor or 'DEF' for default)
(HTM - ManualJ Heat Transfer Multiplier)
Key: Floor size (perimeter(p) for slab-on-grade or area for all other floor types)

Version 8
For Florida residences only

System Sizing Calculations - Summer

Residential Load - Whole House Component Details

Barbale Residence
SW Cozy Glen
Lake City, FL 32025-

Project Title:
Jim & Theresa Barbale

Code Only
Professional Version
Climate: North

Reference City: Gainesville (Defaults) Summer Temperature Difference: 17.0 F 12/13/2007

Component Loads for Whole House

Window	Type* Pn/SHGC/U/InSh/ExSh/IS	Ornt	Overhang Len	Overhang Hgt	Window Area(sqft) Gross	Shaded	Unshaded	HTM Shaded	HTM Unshaded	Load
1	2, Clear, 0.87, None,N,N	W	7.5ft	9ft.	15.0	6.7	8.3	29	80	855 Btuh
2	2, Clear, 0.87, None,N,N	W	11.8	9ft.	15.0	15.0	0.0	29	80	434 Btuh
3	2, Clear, 0.87, None,N,N	W	11.8	9ft.	20.0	20.0	0.0	29	80	579 Btuh
4	2, Clear, 0.87, None,N,N	W	1.5ft	9ft.	9.0	0.0	9.0	29	80	716 Btuh
5	2, Clear, 0.87, None,N,N	N	1.5ft	9ft.	16.0	0.0	16.0	29	29	463 Btuh
6	2, Clear, 0.87, None,N,N	N	1.5ft	9ft.	15.0	0.0	15.0	29	29	434 Btuh
7	2, Clear, 0.87, None,N,N	E	7.5ft	9ft.	60.0	26.7	33.3	29	80	3421 Btuh
8	2, Clear, 0.87, None,N,N	E	7.5ft	9ft.	13.3	7.8	5.5	29	80	667 Btuh
9	2, Clear, 0.87, None,N,N	S	1.5ft	9ft.	30.0	30.0	0.0	29	34	869 Btuh
10	2, Clear, 0.87, None,N,N	S	1.5ft	9ft.	4.0	4.0	0.0	29	34	116 Btuh
	Excursion									955 Btuh
	Window Total				197 (sqft)					9510 Btuh

Walls	Type	R-Value/U-Value	Area(sqft)	HTM	Load
1	Frame - Wood - Ext	13.0/0.09	1834.7	2.1	3827 Btuh
2	Frame - Wood - Adj	13.0/0.09	196.0	1.5	296 Btuh
	Wall Total		2031 (sqft)		4123 Btuh

Doors	Type	Area (sqft)	HTM	Load
1	Insulated - Exterior	20.0	9.8	196 Btuh
2	Insulated - Adjacent	20.0	9.8	196 Btuh
	Door Total	40 (sqft)		392 Btuh

Ceilings	Type/Color/Surface	R-Value	Area(sqft)	HTM	Load
1	Vented Attic/DarkShingle	30.0	3150.0	1.7	5217 Btuh
	Ceiling Total		3150 (sqft)		5217 Btuh

Floors	Type	R-Value	Size	HTM	Load
1	Slab On Grade	5.0	252 (ft(p))	0.0	0 Btuh
	Floor Total		252.0 (sqft)		0 Btuh

			Envelope Subtotal:		19241 Btuh
Infiltration	Type	ACH	Volume(cuft)	wall area(sqft)	CFM=	Load
	SensibleNatural	0.70	27657	2031	368.8	6005 Btuh
Internal gain		Occupants	Btuh/occupant		Appliance	Load
		8	X 230	+	2400	4240 Btuh
			Sensible Envelope Load:			29486 Btuh
Duct load			(DGM of 0.357)			10516 Btuh
			Sensible Load All Zones			**40002 Btuh**

Manual J Summer Calculations

Residential Load - Component Details (continued)

Barbale Residence
SW Cozy Glen
Lake City, FL 32025-

Project Title:
Jim & Theresa Barbale

Code Only
Professional Version
Climate: North

12/13/2007

WHOLE HOUSE TOTALS

	Sensible Envelope Load All Zones	**29486**	**Btuh**
	Sensible Duct Load	10516	Btuh
	Total Sensible Zone Loads	**40002**	**Btuh**
	Sensible ventilation	0	Btuh
	Blower	0	Btuh
Whole House	**Total sensible gain**	**40002**	**Btuh**
Totals for Cooling	Latent infiltration gain (for 54 gr. humidity difference)	11792	Btuh
	Latent ventilation gain	0	Btuh
	Latent duct gain	2209	Btuh
	Latent occupant gain (8 people @ 200 Btuh per person)	1600	Btuh
	Latent other gain	0	Btuh
	Latent total gain	**15601**	**Btuh**
	TOTAL GAIN	**55603**	**Btuh**

EQUIPMENT

1. Central Unit	#	26000 Btuh
2. Central Unit	#	26000 Btuh

*Key: Window types (Pn - Number of panes of glass)
(SHGC - Shading coefficient of glass as SHGC numerical value or as clear or tint)
(U - Window U-Factor or 'DEF' for default)
(InSh - Interior shading device: none(N), Blinds(B), Draperies(D) or Roller Shades(R))
(ExSh - Exterior shading device: none(N) or numerical value)
(BS - Insect screen: none(N), Full(F) or Half(H))
(Ornt - compass orientation)

Version 8
For Florida residences only

System Sizing Calculations - Summer

Residential Load - Room by Room Component Details

Barbale Residence
SW Cozy Glen
Lake City, FL 32025-

Project Title:
Jim & Theresa Barbale

Code Only
Professional Version
Climate: North

Reference City: Gainesville (Defaults) Summer Temperature Difference: 17.0 F 12/13/2007

Component Loads for Zone #1: Main

Window	Type* Pn/SHGC/U/InSh/ExSh/IS	Ornt	Overhang Len	Overhang Hgt	Window Area(sqft) Gross	Shaded	Unshaded	HTM Shaded	HTM Unshaded	Load
1	2, Clear, 0.87, None,N,N	W	7.5ft	9ft.	15.0	6.7	8.3	29	80	855 Btuh
2	2, Clear, 0.87, None,N,N	W	11.8	9ft.	15.0	15.0	0.0	29	80	434 Btuh
3	2, Clear, 0.87, None,N,N	W	11.8	9ft.	20.0	20.0	0.0	29	80	579 Btuh
4	2, Clear, 0.87, None,N,N	W	1.5ft	9ft.	9.0	0.0	9.0	29	80	716 Btuh
5	2, Clear, 0.87, None,N,N	N	1.5ft	9ft.	16.0	0.0	16.0	29	29	463 Btuh
6	2, Clear, 0.87, None,N,N	N	1.5ft	9ft.	15.0	0.0	15.0	29	29	434 Btuh
7	2, Clear, 0.87, None,N,N	E	7.5ft	9ft.	60.0	26.7	33.3	29	80	3421 Btuh
8	2, Clear, 0.87, None,N,N	E	7.5ft	9ft.	13.3	7.8	5.5	29	80	667 Btuh
9	2, Clear, 0.87, None,N,N	S	1.5ft	9ft.	30.0	30.0	0.0	29	34	869 Btuh
10	2, Clear, 0.87, None,N,N	S	1.5ft	9ft.	4.0	4.0	0.0	29	34	116 Btuh
	Window Total				197 (sqft)					8555 Btuh

Walls	Type	R-Value/U-Value	Area(sqft)	HTM	Load
1	Frame - Wood - Ext	13.0/0.09	1834.7	2.1	3827 Btuh
2	Frame - Wood - Adj	13.0/0.09	196.0	1.5	296 Btuh
	Wall Total		2031 (sqft)		4123 Btuh
Doors	Type		Area (sqft)	HTM	Load
1	Insulated - Exterior		20.0	9.8	196 Btuh
2	Insulated - Adjacent		20.0	9.8	196 Btuh
	Door Total		40 (sqft)		392 Btuh
Ceilings	Type/Color/Surface	R-Value	Area(sqft)	HTM	Load
1	Vented Attic/DarkShingle	30.0	3150.0	1.7	5217 Btuh
	Ceiling Total		3150 (sqft)		5217 Btuh
Floors	Type	R-Value	Size	HTM	Load
1	Slab On Grade	5.0	252 (ft(p))	0.0	0 Btuh
	Floor Total		252.0 (sqft)		0 Btuh
				Zone Envelope Subtotal:	18286 Btuh

Infiltration	Type	ACH	Volume(cuft)	wall area(sqft)	CFM=	Load
	SensibleNatural	0.70	27657	2031	322.7	6005 Btuh
Internal gain		Occupants	Btuh/occupant		Appliance	Load
		8	X 230	+	2400	4240 Btuh
				Sensible Envelope Load:		28531 Btuh
Duct load	Average sealed, Supply(R6.0-Attic), Return(R6.0-Attic)				(DGM of 0.357)	10175 Btuh
					Sensible Zone Load	**38706 Btuh**

The following window Excursion will be assigned to the system loads.

Windows	July excursion for System 1S2	955 Btuh
	Excursion Subtotal:	955 Btuh

Manual J Summer Calculations

Residential Load - Component Details (continued)

Barbale Residence
SW Cozy Glen
Lake City, FL 32025-

Project Title:
Jim & Theresa Barbale

Code Only
Professional Version
Climate: North

12/13/2007

Duct load		340 Btuh
	Sensible Excursion Load	**1295 Btuh**

Manual J Summer Calculations

Residential Load - Component Details (continued)

Barbale Residence
SW Cozy Glen
Lake City, FL 32025-

Project Title:
Jim & Theresa Barbale

Code Only
Professional Version
Climate: North

12/13/2007

WHOLE HOUSE TOTALS

	Sensible Envelope Load All Zones	**29486**	**Btuh**
	Sensible Duct Load	10516	Btuh
	Total Sensible Zone Loads	**40002**	**Btuh**
	Sensible ventilation	0	Btuh
	Blower	0	Btuh
Whole House	**Total sensible gain**	**40002**	**Btuh**
Totals for Cooling	Latent infiltration gain (for 54 gr. humidity difference)	11792	Btuh
	Latent ventilation gain	0	Btuh
	Latent duct gain	2209	Btuh
	Latent occupant gain (8 people @ 200 Btuh per person)	1600	Btuh
	Latent other gain	0	Btuh
	Latent total gain	**15601**	**Btuh**
	TOTAL GAIN	**55603**	**Btuh**

EQUIPMENT

1. Central Unit	#	26000 Btuh
2. Central Unit	#	26000 Btuh

*Key: Window types (Pn - Number of panes of glass)
(SHGC - Shading coefficient of glass as SHGC numerical value or as clear or tint)
(U - Window U-Factor or 'DEF' for default)
(InSh - Interior shading device: none(N), Blinds(B), Draperies(D) or Roller Shades(R))
(ExSh - Exterior shading device: none(N) or numerical value)
(BS - Insect screen: none(N), Full(F) or Half(H))
(Ornt - compass orientation)

Version 8
For Florida residences only

Residential Window Diversity

MidSummer

Barbale Residence
SW Cozy Glen
Lake City, FL 32025-

Project Title:
Jim & Theresa Barbale

Code Only
Professional Version
Climate: North

12/13/2007

Weather data for: Gainesville - Defaults

Summer design temperature	92	F	Average window load for July	8248 Btuh
Summer setpoint	75	F	Peak window load for July	12173 Btu
Summer temperature difference	17	F	Excusion limit(130% of Ave.)	10722 Btu
Latitude	29	North	Window excursion (July)	1451 Btuh

WINDOW Average and Peak Loads

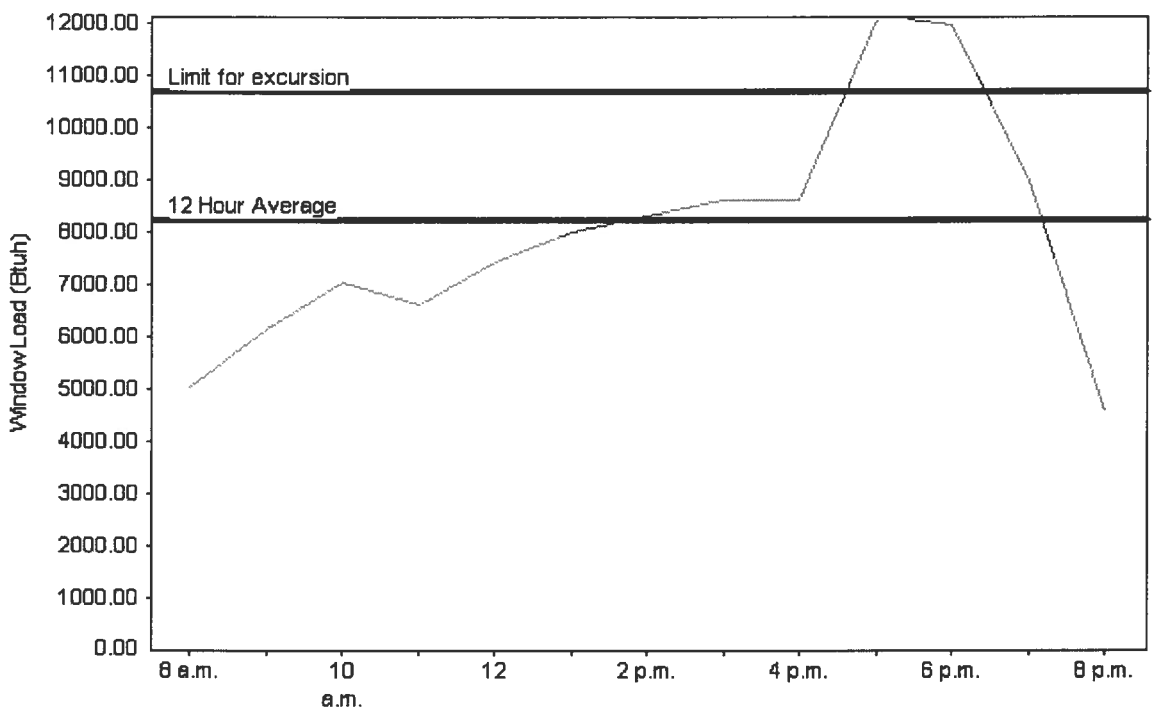

Total July Window Load(Radiation and conduction)

Warning: This application has glass areas that produce relatively large heat gains for part of the day. Variable air volume devices may be required to overcome spikes in solar gain for one or more rooms. A zoned system may be required or some rooms may require zone control.

EnergyGauge® System Sizing for Florida residences only
PREPARED BY: _____
DATE: _____

From: The Columbia County Building & Zoning Department
Plan Review
135 NE Hernando Av.
P.O. Box 1529
Lake City Florida 32056-1529

Reference to a building permit application Number: **0712-60**

Applicant: Theresa Barbale
Owner: Gateway James & Theresa Barbale
Contractor: James Barbale
Property Identification # 26-3s-15-00242-001

On the date of December 21, 2007 building permit application number 0712-60 and the submitted plans for construction of a single family dwelling were reviewed. The following information or alteration to the plans will be required to continue processing this application. If you should have any question please contact the above address, or contact phone number (386) 758-1163 or fax any information to (386) 754-7088.

Please include application number 0712-60 and when making reference to this application.

This is a plan review for compliance with the Florida Residential Codes 2004 only and doesn't make any consideration toward the land use and zoning requirement

1. W.B. Howland the roof truss designer has within the roof truss design created several inter load bearing walls, these walls will require to be supported by the foundation. Please have Mr. Nicholas Geisler review the truss plan layout and show on the foundation plan the type and location of the additional interior load-bearing foundations which will be required to support the roof truss system.

Thank You:

Joe Haltiwanger
Plan Examiner
Columbia County Building Department

From: The Columbia County Building & Zoning Department
Plan Review
135 NE Hernando Av.
P.O. Box 1529
Lake City Florida 32056-1529

Reference to a building permit application Number: **0712-60**

Applicant: Theresa Barbale
Owner: Gateway James & Theresa Barbale
Contractor: James Barbale
Property Identification # 26-3s-15-00242-001

On the date of December 21, 2007 building permit application number 0712-60 and the submitted plans for construction of a single family dwelling were reviewed. The following information or alteration to the plans will be required to continue processing this application. If you should have any question please contact the above address, or contact phone number (386) 758-1163 or fax any information to (386) 754-7088.

Please include application number 0712-60 and when making reference to this application.

This is a plan review for compliance with the Florida Residential Codes 2004 only and doesn't make any consideration toward the land use and zoning requirement

1. W.B. Howland the roof truss designer has within the roof truss design created several inter load bearing walls, these walls will require to be supported by the foundation. Please have Mr. Nicholas Geisler review the truss plan layout and show on the foundation plan the type and location of the additional interior load-bearing foundations which will be required to support the roof truss system.

Thank You:

Joe Haltiwanger
Plan Examiner
Columbia County Building Department

New Construction Subterranean Termite Soil Treatment Record

OMB Approval No. 2502-0525

This form is completed by the licensed Pest Control Company.

Public reporting burden for this collection of information is estimated to average 15 minutes per response, including the time for reviewing instructions, searching existing data sources, gathering and maintaining the data needed, and completing and reviewing the collection of information. This information is mandatory and is required to obtain benefits. HUD may not collect this information, and you are not required to complete this form, unless it displays a currently valid OMB control number.
Section 24 CFR 200.926d(b)(3) requires that the sites for HUD insured structures must be free of termite hazards. This information collection requires the builder to certify that an authorized Pest Control company performed all required treatment for termites, and that the builder guarantees the treated area against infestation for one year. Builders, pest control companies, mortgage lenders, homebuyers, and HUD as a record of treatment for specific homes will use the information collected. The information is not considered confidential.

This report is submitted for informational purposes to the builder on proposed (new) construction cases when soil treatment for prevention of subterranean termite infestation is specified by the builder, architect, or required by the lender, architect, FHA, or VA.

All contracts for services are between the Pest Control Operator and builder, unless stated otherwise.

Section 1: General Information (Treating Company Information) 26552

Company Name: Aspen Pest Control, Inc.
Company Address: 321 N.W. Cole Terrace, Suite 107 City Lake City State FL Zip 32055
Company Business License No. JB100076 Company Phone No. 386-755-3611 • 352-494-5751
FHA/VA Case No. (if any)

Section 2: Builder Information

Company Name: Home Builders Company Phone No.

Section 3: Property Information

Location of Structure(s) Treated (Street Address or Legal Description, City, State and Zip) 334 SW [illegible] Lake City, FL 32

Type of Construction (More than one box may be checked) ☐ Slab ☐ Basement ☐ Crawl ☐ Other
Approximate Depth of Footing: Outside 12 Inside 24 Type of Fill [illegible]

Section 4: Treatment Information

Date(s) of Treatment(s) 1-31-03
Brand Name of Product(s) Used [illegible]
EPA Registration No. [illegible]
Approximate Final Mix Solution % [illegible]
Approximate Size of Treatment Area: Sq. ft. [illegible] Linear ft. [illegible] Linear ft. of Masonry Voids [illegible]
Approximate Total Gallons of Solution Applied 959
Was treatment completed on exterior? ☐ Yes ☐ No
Service Agreement Available? ☒ Yes ☐ No
Note: Some state laws require service agreements to be issued. This form does not preempt state law.

Attachments (List)

Comments

Name of Applicator(s) [illegible] Certification No. (if required by State law)

The applicator has used a product in accordance with the product label and state requirements. All treatment materials and methods used comply with state and federal regulations.

Authorized Signature [illegible] Date 1-31-03

Warning: HUD will prosecute false claims and statements. Conviction may result in criminal and/or civil penalties. (18 U.S.C. 1001, 1010. 1012; 31 U.S.C. 3729, 3802)

Reorder Product #2581 • from CROWNMAX • 1-800-252-4011

Barbale House
334 SW Cozy Glen
Lake City, FL 32024

Building Permit #000026552

We acknowledge that due to the numerous inspections necessary to pass the rough inspections on the Heating and Air Conditioning Duct System, as required by Columbia County Building Department, a through operational check of the HV/AC System will be required before a Certificate of Occupancy will be issued for the above listed property.

James Barbale — 4/22/08
Owner Signature — Date

James Barbale
Printed Name

Theresa M. Barbale — 4-22-08
Owner Signature — Date

Theresa M. Barbale
Printed Name

Genevieve W. Register — 4-22-08
Notary Signature — Date

Genevieve W. Register
Printed Name

Notary Stamp

GENEVIEVE W. REGISTER
Notary Public - State of Florida
My Commission Expires Nov 4, 2011
Commission # DD 692274
Bonded Through National Notary Assn.

CERTIFICATE OF

OCCUPANCY

COLUMBIA COUNTY, FLORIDA

Department of Building and Zoning Inspection

This Certificate of Occupancy is issued to the below named permit holder for the building and premises at the below named location, and certifies that the work has been completed in accordance with the Columbia County Building Code.

Parcel Number 26-3S-15-00242-007 **Building permit No.** 000026552

Use Classification SFD/UTILITY **Fire:** 6.42

Permit Holder JAMES & THERESA BARBALE **Waste:** 16.75

Owner of Building JAMES & THERESA BARBALE **Total:** 23.17

Location: 334 SW COZY GLEN, LAKE CITY, FL

Date: 09/11/2008

Wayne A. Rush

Building Inspector

POST IN A CONSPICUOUS PLACE
(Business Places Only)