DATE 01/27/2011

Columbia County Building Permit

This Permit Must Be Prominently Posted on Premises During Construction

PERMIT
000029145

APPLICANT FRANK FEDERMEYER PHONE 758-7522

ADDRESS 757 SW SR 247, SUITE 101 LAKE CITY FL 32025

OWNER EVERETT & JANET PARKER PHONE 754-8524

ADDRESS 249 NW LIVE OAK PLACE LAKE CITY FL 32025

CONTRACTOR ADVANTAGE POOLS PHONE 758-7522

LOCATION OF PROPERTY LAKE JEFFREY RD., TR INDIAN SPRING DR., TL LIVE OAK PLACE, ACROSS FROM DOGWOOD TERR.

TYPE DEVELOPMENT SWIMMING POOL ESTIMATED COST OF CONSTRUCTION 48890.00

HEATED FLOOR AREA _____ TOTAL AREA _____ HEIGHT ____ STORIES ____

FOUNDATION _____ WALLS _____ ROOF PITCH _____ FLOOR _____

LAND USE & ZONING AG-3 MAX. HEIGHT _____

Minimum Set Back Requirments: STREET-FRONT 30.00 REAR 25.00 SIDE 25.00

NO. EX.D.U. 1 FLOOD ZONE NA DEVELOPMENT PERMIT NO. _____

PARCEL ID 12-3S-15-00167-034 SUBDIVISION OAK HAVEN

LOT 5 BLOCK ____ PHASE ____ UNIT ____ TOTAL ACRES 4.01

Culvert Permit No.	Culvert Waiver	Contractor's License Number	Applicant/Owner/Contractor
		CPC1456754	Frank Federmeyer

Driveway Connection	Septic Tank Number	LU & Zoning checked by	Approved for Issuance	New Resident
EXISTING	NA	BK	TC	N

COMMENTS: NOC ON FILE

Check # or Cash 1562

FOR BUILDING & ZONING DEPARTMENT ONLY

(footer/Slab)

Temporary Power _____ date/app. by Foundation _____ date/app. by Monolithic _____ date/app. by

Under slab rough-in plumbing _____ date/app. by Slab _____ date/app. by Sheathing/Nailing _____ date/app. by

Framing _____ date/app. by Insulation _____ date/app. by

Rough-in plumbing above slab and below wood floor _____ date/app. by Electrical rough-in _____ date/app. by

Heat & Air Duct _____ date/app. by Peri. beam (Lintel) _____ date/app. by Pool _____ date/app. by

Permanent power _____ date/app. by C.O. Final _____ date/app. by Culvert _____ date/app. by

Pump pole _____ date/app. by Utility Pole _____ date/app. by M/H tie downs, blocking, electricity and plumbing _____ date/app. by

Reconnection _____ date/app. by RV _____ date/app. by Re-roof _____ date/app. by

BUILDING PERMIT FEE $ 245.00 CERTIFICATION FEE $ 0.00 SURCHARGE FEE $ 0.00

MISC. FEES $ 0.00 ZONING CERT. FEE $ 50.00 FIRE FEE $ 0.00 WASTE FEE $ _____

FLOOD DEVELOPMENT FEE $ _____ FLOOD ZONE FEE $ _____ CULVERT FEE $ _____ **TOTAL FEE** 295.00

INSPECTORS OFFICE L. Hodge CLERKS OFFICE CH

NOTICE: IN ADDITION TO THE REQUIREMENTS OF THIS PERMIT, THERE MAY BE ADDITIONAL RESTRICTIONS APPLICABLE TO THIS PROPERTY THAT MAY BE FOUND IN THE PUBLIC RECORDS OF THIS COUNTY. AND THERE MAY BE ADDITIONAL PERMITS REQUIRED FROM OTHER GOVERNMENTAL ENTITIES SUCH AS WATER MANAGEMENT DISTRICTS, STATE AGENCIES, OR FEDERAL AGENCIES.

"WARNING TO OWNER: YOUR FAILURE TO RECORD A NOTICE OF COMMENCEMENT MAY RESULT IN YOUR PAYING TWICE FOR IMPROVEMENTS TO YOUR PROPERTY. IF YOU INTEND TO OBTAIN FINANCING, CONSULT WITH YOUR LENDER OR AN ATTORNEY BEFORE RECORDING YOUR NOTICE OF COMMENCEMENT."

EVERY PERMIT ISSUED SHALL BECOME INVALID UNLESS THE WORK AUTHORIZED BY SUCH PERMIT IS COMMENCED WITHIN 180 DAYS AFTER ITS ISSUANCE, OR IF THE WORK AUTHORIZED BY SUCH PERMIT IS SUSPENDED OR ABANDONED FOR A PERIOD OF 180 DAYS AFTER THE TIME THE WORK IS COMMENCED. A VALID PERMIT RECIEVES AN APPROVED INSPECTION EVERY 180 DAYS. WORK SHALL BE CONSIDERED NOT SUSPENDED, ABANDONED OR INVALID WHEN THE PERMIT HAS RECIEVED AN APPROVED INSPECTION WITHIN 180 DAYS OT THE PREVIOUS INSPECTION.

The Issuance of this Permit Does Not Waive Compliance by Permittee with Deed Restrictions.

CK# 1562

Columbia County Building Permit Application ☐ AHL ☐ FEE DUE

For Office Use Only Application # 1101-23 Date Received 1/20 By JW Permit # 29145

Zoning Official BLK Date 27.01.11 Flood Zone N/A Land Use A-3 Zoning A-3

FEMA Map # N/A Elevation N/A MFE N/A River N/A Plans Examiner T.C. Date 1-25-11

Comments

☐ NOC ☐ EH ☑ Deed or PA ☑ Site Plan ☐ State Road Info ☐ Parent Parcel #

☐ Dev Permit # ☐ In Floodway ☑ Letter of Auth. from Contractor ☐ F W Comp. letter

IMPACT FEES: EMS Fire Corr Road/Code Expired 1.14.11

School — = TOTAL Accessory Use ☑ LIABILITY + W.C. updated

Septic Permit No. — Fax 386-758-6932

Name Authorized Person Signing Permit Frank Federmeyer Phone 386-758-7522

Address 757 SW SR 247 Suite 101, L.C. FL 32025

Owners Name Everett and Janet Parker Phone 386-754-8524

911 Address 249 NW Live Oak Place Lake City, FL 32025

Contractors Name Advantage Pools Inc. Phone 386-758-7522

Address 757 SW SR 247 Suite 101 Lake City, FL 32025

Fee Simple Owner Name & Address Same as above

Bonding Co. Name & Address —

Architect/Engineer Name & Address A.E.C.C. San Juan / Steven Schwab 2302 Lasso Lane Lakeland, FL 33801

Mortgage Lenders Name & Address

Circle the correct power company – FL Power & Light – Clay Elec. – Suwannee Valley Elec. – Progress Energy

Property ID Number 12-3S-15-00167-034 Estimated Cost of Construction 48,890

Subdivision Name Oak Haven Lot 5 Block C Unit Phase

Driving Directions 90 towards Live Oak - turn right on 135 to Lake Jeffrey Rd to a right on Live Oak Lane - to a right on Live Oak Place. (Oakhaven S/D)

Number of Existing Dwellings on Property

Construction of Swimming pool Total Acreage 4.010 Lot Size

Do you need a - Culvert Permit or Culvert Waiver or Have an Existing Drive Total Building Height

Actual Distance of Structure from Property Lines - Front ~~223 ft~~ Side ~~120.67 ft~~ Side ~~75.99 ft~~ Rear ~~366.07 ft~~

Number of Stories Heated Floor Area Total Floor Area Roof Pitch

Application is hereby made to obtain a permit to do work and installations as indicated. I certify that no work or installation has commenced prior to the issuance of a permit and that all work be performed to meet the standards of all laws regulating construction in this jurisdiction.

Columbia County Building Permit Application

TIME LIMITATIONS OF APPLICATION : An application for a permit for any proposed work shall be deemed to have been abandoned 180 days after the date of filing, unless such application has been pursued in good faith or a permit has been issued; except that the building official is authorized to grant one or more extensions of time for additional periods not exceeding 90 days each. The extension shall be requested in writing and justifiable cause demonstrated.

FLORIDA'S CONSTRUCTION LIEN LAW: Protect Yourself and Your Investment
According to Florida Law, those who work on your property or provide materials, and are not paid-in-full, have a right to enforce their claim for payment against your property. This claim is known as a construction lien. If your contractor fails to pay subcontractors or material suppliers or neglects to make other legally required payments, the people who are owed money may look to your property for payment, even if you have paid your contractor in full. This means if a lien is filed against your property, it could be sold against your will to pay for labor, materials or other services which your contractor may have failed to pay.

NOTICE OF RESPONSIBILITY TO BUILDING PERMITEE:
YOU ARE HEREBY NOTIFIED as the recipient of a building permit from Columbia County, Florida, you will be held responsible to the County for any damage to sidewalks and/or road curbs and gutters, concrete features and structures, together with damage to drainage facilities, removal of sod, major changes to lot grades that result in ponding of water, or other damage to roadway and other public infrastructure facilities caused by you or your contractor, subcontractors, agents or representatives in the construction and/or improvement of the building and lot for which this permit is issued. No certificate of occupancy will be issued until all corrective work to these public infrastructures and facilities has been corrected.

WARNING TO OWNER: YOUR FAILURE TO RECORD A NOTICE OF COMMENCMENT MAY RESULT IN YOU PAYING TWICE FOR IMPROVEMENTS TO YOUR PROPERTY. A NOTICE OF COMMENCEMENT MUST BE RECORDED AND POSTED ON THE JOB SITE BEFORE THE FIRST INSPECTION. IF YOU INTEND TO OBTAIN FINANCING, CONSULT WITH YOUR LENDER OR ATTORNEY BEFORE RECORDING YOUR NOTICE OF COMMENCEMENT.

OWNERS CERTIFICATION: I hereby certify that all the foregoing information is accurate and all work will be done in compliance with all applicable laws and regulating construction and zoning. I further understand the above written responsibilities in Columbia County for obtaining this Building Permit.

Owners Signature

CONTRACTORS AFFIDAVIT: By my signature I understand and agree that I have informed and provided this written statement to the owner of all the above written responsibilities in Columbia County for obtaining this Building Permit.

Contractor's Signature (Permitee)

Contractor's License Number CPC 1456454
Columbia County
Competency Card Number_____

Affirmed under penalty of perjury to by the Contractor and subscribed before me this 21st **day of** January **20**11.
Personally known_____ **or Produced Identification** FL driver's license P626-212-45-457-0

State of Florida Notary Signature (For the Contractor)

SEAL:
STEPHANIE L PARKER
MY COMMISSION # DD760555
EXPIRES February 20, 2012
(407) 398-0153 FloridaNotaryService.com

Revised 1-10-08

Residential Swimming Pool Spa and Hot Tub Safety Act Requirement

I, Everett L. PARKER hereby affirm that one of the following methods will be used to meet the requirements of Chapter 515, Florida Statutes.

** The pool will be isolated from access to the home by an enclosure that meets the pool barrier requirements of Florida Statute 515.29;

** The pool will be equipped with an approved safety pool cover that complies with ASTM F1346-91 (Standard Performance Specifications for Safety Covers for Swimming Pools, Spas and Hot Tubs);

** All doors and windows providing direct access from the home to the pool will be equipped with an exit alarm that has a minimum sound pressure rating of 85 decibels at 10 feet;

** All doors providing direct access from the home to the pool will be equipped with a self-closing, self-catching device with a release mechanism placed no lower than 54" above the floor or deck.

I understand that not having one of the above installed at the time of final inspection will constitute a violation of Chapter 515 F.S., and will be considered as committing a misdemeanor of the second degree.

OWNER'S SIGNATURE _____

ADVANTAGE POOLS Stephanie Parker

Advantage Pools

757 SW SR 247 Suite 101
Lake City, Florida 32025
voice 386-758-7522 fax 386-758-6932
http://www.advantagepools.com

Specification Sheet

05/26/2009

Name	Everett Parker
Address	249 Live Oak Place
City	Lake City
State	FL
Zip	32025
E Mail	
Home Phone	754-8524
Lot Identification	
Work Phone	

DATE 01/20/2011 Customer initials

Sj2	Pool	Oceanside	$38,600	16'2"x40'6 / 3'-8'
Sj3	Pool Color	Blue	$0	
Sj4	Pool & Standard Installation	Pool & Installation	$38,600	
T2	Tile	Choice	$1,310	
	Light	LED Savi 9 colors	$1,000	
	Automatic Cleaner	Great White	$549	
	Chlorinator	Aqua Rite Chlorine	$1,600	
	Heater	Heater	$0	
	Solar Cover	Solar Cover	$0	
	Swim Jets	Swim Jets	$0	
	Ladder	Ladder	N/C	
	Pump Option	1 HP Whisperflow	$0	
	Filter Option	Clean & Clear150 s	$0	
	Extra Concrete	Extra Concrete	Incl	
	Safety Barrier	Safety Barrier	$0	13108
	Termite Control	By Owner	$0	
	Water Falls	Water Falls	$0	
	Electrical	~~By Owner~~ Existing	$0	
	Diving Board	Diving Board	$0	
	Retaining wall & steps	Wall & steps, stucc	$1,891	
	Deck Drain	Deck Drain	$650	
	Acrylic Deck Paris Cream	Choice of color	$2,890	
ST	Spa Horiz Autumn Tan	Spa	$0	
Acc	Concrete Pumping /Pour Brown/	Concrete Pumping	$400	
	Tree & Stump Removal Face	remove 1 stump	N/C	
	Alarms	As needed $40. ea	$0	
	Fence	Fence	$0	

Contract Price			$48,890
	Deposit		$4,889
Upon excavation		30%	$13,200
Setting pool shell		40%	$17,600
Pouring concrete		20%	$8,800
Upon Completion		10%	$4,400
Excavated fill to remain on site	check		$48,890

Pdck 811

	p	p&d	d
	602	1104	502

Extra Concrete

$4.50	/sq ft				$4,356.00
side	side	sq ft	p+d area	sq ft	
	28	74	2072	1104	968
	0	0	0		0
	0	0	0		0
	0	0	0		0
	0	0	0		0

Concrete to Pour			1470	sq ft	24.25
3908 sf			Barrier Total		$13,108.00
Screen side	side				
1	0	9.5	0	$3.50	$0.00
2	74	9.5	703	$3.50	$0.00
3	74	9.5	703	$3.50	$0.00
4	6	9.5	57	$3.50	$0.00
5			0	$3.50	$0.00
Built on job			0	$3.50	$0.00
Screen Top			0	$3.50	$0.00
Screen Top	24	47	1128	$3.50	$0.00
Pan Roof			0	$8.50	$0.00
Elite Roof			0	$9.75	$0.00
Extra Door			0	$175	$0.00
Florida Glass s/f			0	$1.50	$0.00
Kickplate lin/ft			0	$7.70	$0.00
Supergutter 5"			0	$12.15	$0.00
Supergutter 7"			0	$17.15	$0.00
Security Fence			0	$38.50	$0.00
Gate for Fence			0	$400.00	$0.00
Barrier Fence			0	$18.00	$0.00
Engineering			0	$300.00	$0.00
Deck Drain			130	$5.00	$650.00
Rescreen			0	$1.00	$0.00
Acrylic Deck	$2.50				$2,900.00
side	side	sq ft	pool area		1470
1	28	74	2072	602	1470
2			0		0
3			0		0
4			0		0

SECTION XV. Florida Building Code

15.01 I have received a copy of The Residential Swimming pool Safety Act 515 and Safety Barrier Guidelines for Home Pools.

15.02 Construction Industries Recovery Fund: Payment may be made available from the construction industries recovery fund if you lose money on a project performed under contract, where the loss results from specified violations of Florida Law by a state-licensed contractor. For information about the recovery fund and filing a claim, contact the Florida Construction Industry Licensing Board at the following telephone number and address: 1940 North Monroe Street, Tallahassee, FL 32399-1039 Phone 850-487-1395

ACCORDING TO FLORIDA'S CONSTRUCTION LIEN LAW (SECTIONS 713.001 – 713.37, FLORIDA STATUTES), THOSE WHO WORK ON YOUR PROPERTY OR PROVIDE MATERIALS AND ARE NOT PAID-IN-FULL HAVE A RIGHT TO ENFORCE THEIR CLAIM FOR PAYMENT AGAINST YOUR PROPERTY. THIS CLAIM IS KNOWN AS A CONSTRUCTION LIEN. IF YOUR CONTRACTOR OR A SUBCONTRACTOR FAILS TO PAY SUBCONTRACTORS, SUB-SUBCONTRACTORS, OR MATERIAL SUPPLIERS OR NEGLECTS TO MAKE OTHER LEGALLY REQUIRED PAYMENTS, THE PEOPLE WHO ARE OWED MONEY MAY LOOK TO YOUR PROPERTY FOR PAYMENT, EVEN IF YOU HAVE PAID YOUR CONTRACTOR IN FULL. IF YOU FAIL TO PAY YOUR CONTRACTOR, YOUR CONTRACTOR MAY ALSO HAVE A LIEN ON YOUR PROPERTY. THIS MEANS IF A LIEN IS FILED YOUR PROPERTY COULD BE SOLD AGAINST YOUR WILL TO PAY

Prepared by & Return to:
Matthew D. Rocco
Sierra Title, LLC
419 SW SR 247, Suite 109
Lake City, Florida 32025

File Number: 10-0187

Inst:201012006124 Date:4/19/2010 Time:3:22 PM
Doc Stamp-Deed:2065.00
DC,P.DeWitt Cason,Columbia County Page 1 of 1 B:1192 P:2385

General Warranty Deed

Made this April 15, 2010 A.D. By **Frank P. Metcalf and his wife, Yvette Metcalf,** whose post office address is: 249 NW Live Oak Place, Lake City, Florida 32055, hereinafter called the grantor, to **Everett L. Parker and his wife, Janet L. Parker,** whose post office address is: 719 Moosehead Lake Road, Greenville, ME 04441, hereinafter called the grantee:

(Whenever used herein the term "grantor" and "grantee" include all the parties to this instrument and the heirs, legal representatives and assigns of individuals, and the successors and assigns of corporations)

Witnesseth, that the grantor, for and in consideration of the sum of Ten Dollars, ($10.00) and other valuable considerations, receipt whereof is hereby acknowledged, hereby grants, bargains, sells, aliens, remises, releases, conveys and confirms unto the grantee, all that certain land situate in Columbia County, Florida, viz:

Lot 5, Block C, Oakhaven, according to the map or plat thereof, as recorded in Plat Book 5, Page 54, of the Public Records of Columbia County, Florida.

Parcel ID Number: **R00167-034**

Together with all the tenements, hereditaments and appurtenances thereto belonging or in anywise appertaining.

To Have and to Hold, the same in fee simple forever.

And the grantor hereby covenants with said grantee that the grantor is lawfully seized of said land in fee simple; that the grantor has good right and lawful authority to sell and convey said land; that the grantor hereby fully warrants the title to said land and will defend the same against the lawful claims of all persons whomsoever; and that said land is free of all encumbrances except taxes accruing subsequent to December 31, 2009.

In Witness Whereof, the said grantor has signed and sealed these presents the day and year first above written.

Signed, sealed and delivered in our presence:

Melinda Weaver
Witness Printed Name MELINDA WEAVER

Matthew D. Rocco
Witness Printed Name **Matthew D. Rocco**

Frank P. Metcalf (Seal)
Frank P. Metcalf
Address: 249 NW Live Oak Place, Lake City, Florida 32055

Yvette Metcalf (Seal)
Yvette Metcalf
Address:

State of Florida
County of Columbia

The foregoing instrument was acknowledged before me this 15th day of April, 2010, by Frank P. Metcalf and his wife, Yvette Metcalf, who is/are personally known to me or who has produced FL DRIVERS LIC as identification.

Notary Public State of Florida
Matthew Rocco
My Commission DD578349
Expires 09/17/2010

Notary Public
Print Name:

My Commission Expires:

REAL ESTATE 2010 100411.0000

NOTICE OF AD VALOREM TAXES AND NON-AD VALOREM ASSESSMENTS

OW CD	ASSESSED VALUE	EXEMPTIONS	TAXABLE VALUE	MILLAGE CODE
	See Below	See Below	See Below	003

TO**MIXED AADC 325

12-3S-15 0100/0100 4.01 acres
LOT 5 BLOCK C OAKHAVEN S/D.
ORB 843-1358, TRUST 923-02,
969-2331, 969-2332, WD 1014-03
WD 1192-2385,

AD VALOREM TAXES

GE RATE	ASSESSED VALUE	EXEMPTION AMOUNT	TAXABLE VALUE	TAXES LEVIED
7.8910	228,064	50,000	178,064	1,405.10
0.9980	228,064	25,000	203,064	202.65
5.4140	228,064	25,000	203,064	1,099.39
1.5000	228,064	25,000	203,064	304.60
0.4399	228,064	50,000	178,064	78.33
0.9620	228,064	50,000	178,064	171.30
0.1240	228,064	50,000	178,064	22.08
17.3289			AD VALOREM TAXES	3,283.45

NON-AD VALOREM ASSESSMENTS

DATE	AMOUNT

RECEIPT OR MAIL A SELF-ADDRESSED STAMPED ENVELOPE FOR RETURN OF VALIDATED RECEIPT.
TAXES BECOME DELINQUENT ADDITIONAL PENALTIES AND FEES WILL APPLY.

Columbia County Property Appraiser

DB Last Updated: 1/6/2011

2010 Tax Year

Tax Collector | Tax Estimator | Property Card | Parcel List Generator | Interactive GIS Map | Print

Parcel: 12-3S-15-00167-034

<< Next Lower Parcel | Next Higher Parcel >>

Search Result: 1 of 1

Owner & Property Info

Owner's Name	PARKER EVERETT L & JANET L		
Mailing Address	719 MOOSEHEAD LAKE RD GREENVILLE, ME 04441		
Site Address	249 NW LIVE OAK PL		
Use Desc. (code)	SINGLE FAM (000100)		
Tax District	3 (County)	**Neighborhood**	12315
Land Area	4.010 ACRES	**Market Area**	01
Description	NOTE: This description is not to be used as the Legal Description for this parcel in any legal transaction.		

LOT 5 BLOCK C OAKHAVEN S/D. ORB 843-1358, TRUST 923-02, 969-2331, 969-2332, WD 1014-03 WD 1192-2385,

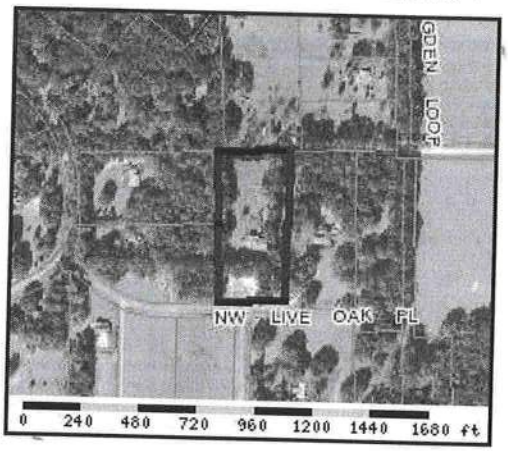

Property & Assessment Values

2010 Certified Values		
Mkt Land Value	cnt: (0)	$45,785.00
Ag Land Value	cnt: (1)	$0.00
Building Value	cnt: (1)	$200,180.00
XFOB Value	cnt: (1)	$1,172.00
Total Appraised Value		$247,137.00
Just Value		$247,137.00
Class Value		$0.00
Assessed Value		$222,068.00
Exempt Value	(code: HX)	$50,000.00
Total Taxable Value		Cnty: $172,068 Other: $172,068 | Schl: $197,068

2011 Working Values

NOTE:
2011 Working Values are NOT certified values and therefore are subject to change before being finalized for ad valorem assessment purposes.

Show Working Values

Sales History

Show Similar Sales within 1/2 mile

Sale Date	OR Book/Page	OR Code	Vacant / Improved	Qualified Sale	Sale RCode	Sale Price
4/15/2010	1192/2385	WD	I	Q	01	$295,000.00
4/30/2004	1014/3	WD	I	Q		$232,000.00
12/9/2002	969/2331	WD	I	Q		$235,900.00
12/9/2002	969/2332	WD	I	U	03	$100.00
3/22/2001	923/2	WD	I	U	01	$0.00
8/1/1997	843/1358	WD	V	Q		$26,000.00

Building Characteristics

Bldg Item	Bldg Desc	Year Blt	Ext. Walls	Heated S.F.	Actual S.F.	Bldg Value
1	SINGLE FAM (000100)	1998	COMMON BRK (19)	2858	4769	$190,568.00
	Note: All S.F. calculations are based on exterior building dimensions.					

Extra Features & Out Buildings

Code	Desc	Year Blt	Value	Units	Dims	Condition (% Good)

BOUNDARY SURVEY IN SECTION 12 , TOWNSHIP 3 SOUTH, RANGE 15 EAST, COLUMBIA COUNTY, FLORIDA.

DESCRIPTION:
LOT 5 OF "OAKHAVEN" AS PER PLAT THEREOF RECORDED IN PLAT BOOK 5, PAGES 54 & 54A OF THE PUBLIC RECORDS OF COLUMBIA COUNTY, FLORIDA.

COLUMBIA COUNTY BUILDING DEPARTMENT
Received for FILE COPY
Code Compliance
PLANS EXAMINER

SURVEYOR'S NOTES:
1. BOUNDARY BASED ON MONUMENTATION FOUND IN ACCORDANCE WITH THE RETRACEMENT OF THE ORIGINAL SURVEY FOR SAID PLAT OF RECORD.
2. BEARINGS ARE BASED ON SAID PLAT OF RECORD.
3. THIS PARCEL IS IN ZONE "X" AND IS DETERMINED TO BE OUTSIDE THE 500 YEAR FLOOD PLAIN AS PER FLOOD RATE MAP, DATED 6 JANUARY, 1988 COMMUNITY PANEL NUMBER 120070 0125 B. HOWEVER, THE FLOOD INSURANCE RATE MAPS ARE SUBJECT TO CHANGE.
4. THE IMPROVEMENTS, IF ANY, INDICATED ON THIS SURVEY DRAWING ARE AS LOCATED ON DATE OF FIELD SURVEY AS SHOWN HEREON.
5. IF THEY EXIST, NO UNDERGROUND ENCROACHMENTS AND/OR UTILITIES WERE LOCATED FOR THIS SURVEY EXCEPT AS SHOWN HEREON.
6. THIS SURVEY WAS COMPLETED WITHOUT THE BENEFIT OF A TITLE COMMITMENT OR A TITLE POLICY.

Curve number 1
Radius = 25.00'
Delta = 42°45'46" (42°58'08" PLAT)
Arc= 18.66' (18.69' PLAT)
Tang = 9.79'
Chor = 18.23'
Chor Brg. S.67°28'54"W.

SYMBOL LEGEND:
- 4"X4" CONCRETE MONUMENT FOUND
- 4"X4" CONCRETE MONUMENT SET
- IRON PIPE FOUND
- IRON PIN AND CAP SET
- POWER POLE
- WATER METER
- CENTERLINE
- WELL
- SATELLITE DISH
- TELEPHONE BOX
- ELECTRIC LINES
- WIRE FENCE
- CHAIN LINK FENCE
- WOODEN FENCE

SCALE: 1" = 100'

ALL CONCRETE MONUMENTS LOCATED ARE IDENTIFIED AS, L. E. BRITT, P.L.S. 1079.

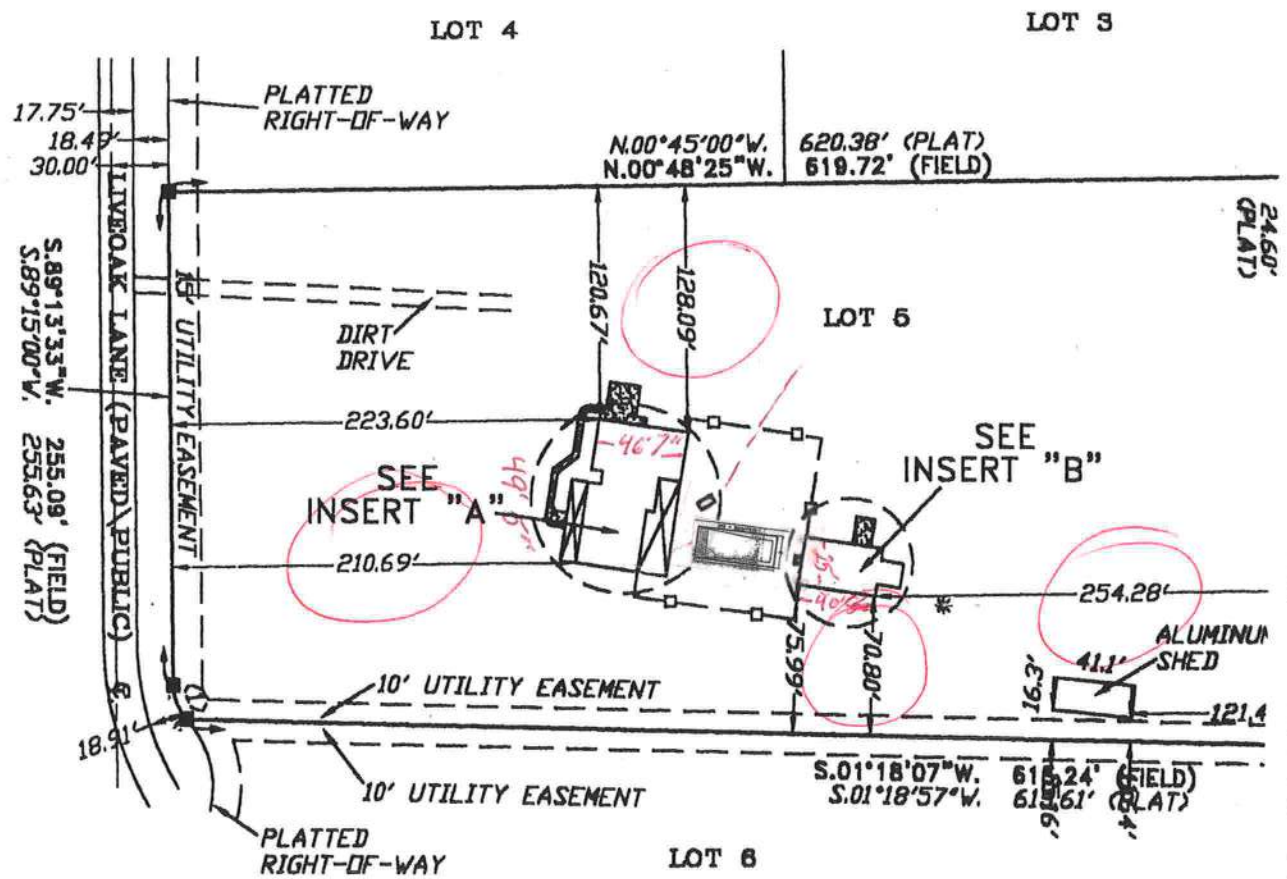

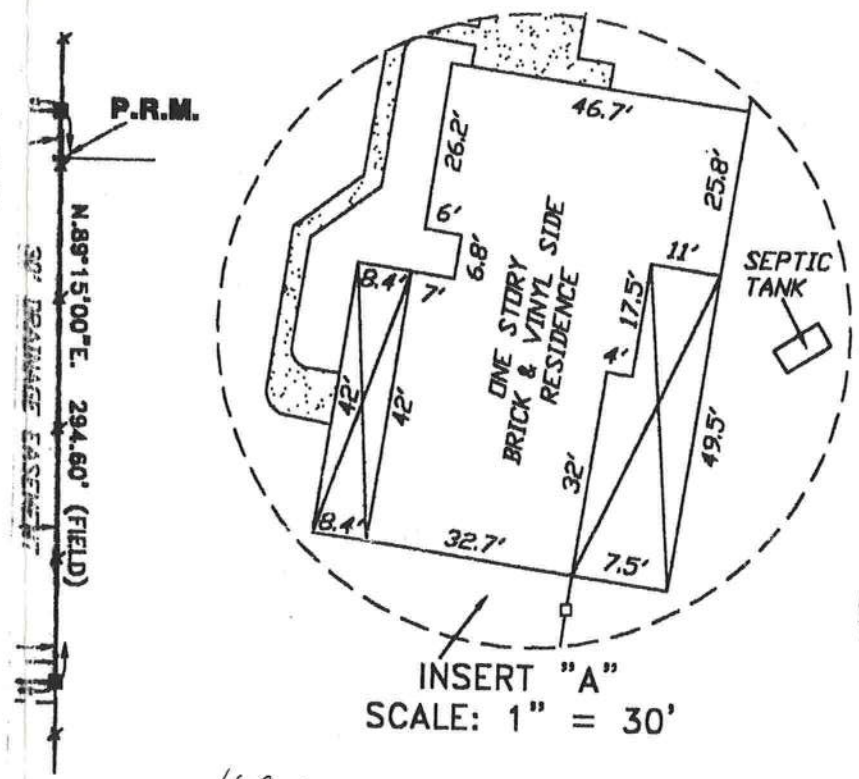

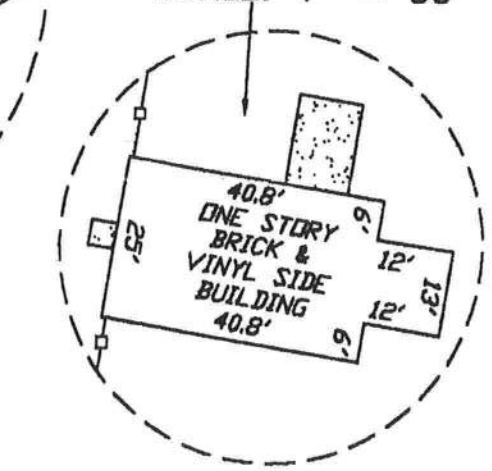

169,621 SF
2.9 ACRE = 43,560

CERTIFIED TO:
MARGARET McKENZE
CAPITAL CITY BANK
ABSTRACT AND TITLE SERVICES, INC.
CHICAGO TITLE INSURANCE COMPANY

FIELD BOOK: 247 PAGE(S): 67

SURVEYOR'S CERTIFICAT

I HEREBY CERTIFY THAT THIS SURVEY WAS MADE UNDER MY I TECHNICAL STANDARDS AS SET FORTH BY THE FLORIDA BOARD IN CHAPTER 61G17-6, FLORIDA ADMINISTRATIVE CODE, PURSUA

12/03/02 FIELD SURVEY DATE
12/04/02 DRAWING DATE

NOTE: UNLESS IT BEARS THE SIGNATURE AND THE ORIGINAL RAISI MAPPER THIS DRAWING, SKETCH, PLAT OR MAP IS FOR INFORMATI

SELF CHARGE AND MEETS THE MINIMUM PROFESSIONAL SURVEYORS AND MAPPERS SECTION 472.027, FLORIDA STATUTES.
BRITT BRITT, P.S.M.
REGISTRATION # 5757
OF A FLORIDA LICENSED SURVEYOR AND PURPOSES ONLY AND IS NOT VALID.

BRITT SURVEYING
LAND SURVEYORS AND MAPPERS
830 WEST DUVAL STREET LAKE CITY, FLORIDA 32055
(386)752-7163 FAX (386)752-5573

WORK ORDER # L-13265

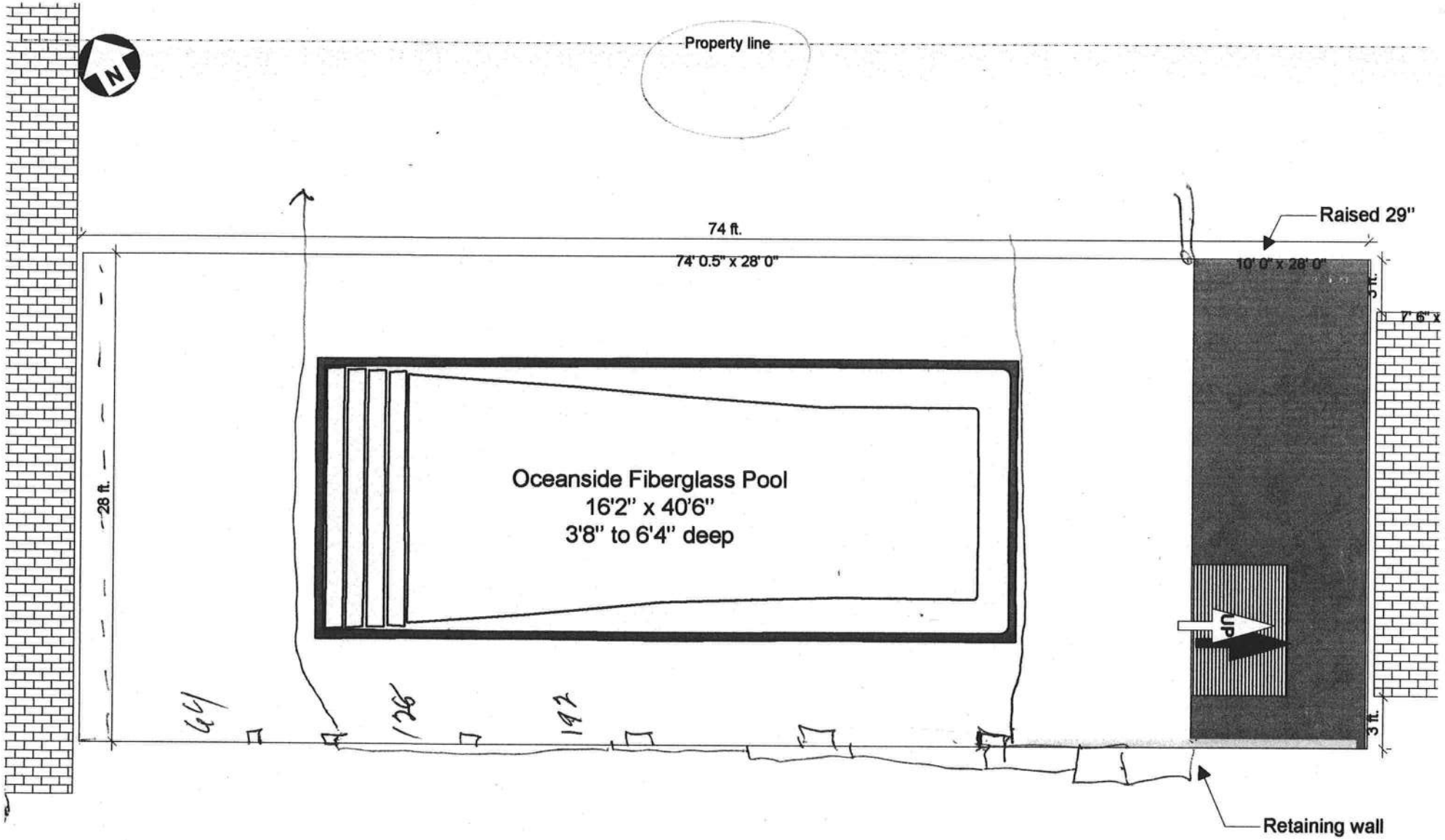

Advantage Pools **757 SW SR 247 Suite 101** **Lake City FL 32025**	**Phone: 386-758-7522** **Fax: 386-758-6932**	**Designed by:** **Ray Lussier**	**Accepted by: Everett Parker**

ALL MEASUREMENTS TO WATERS EDGE - ADD PREFERRED OVERDIG

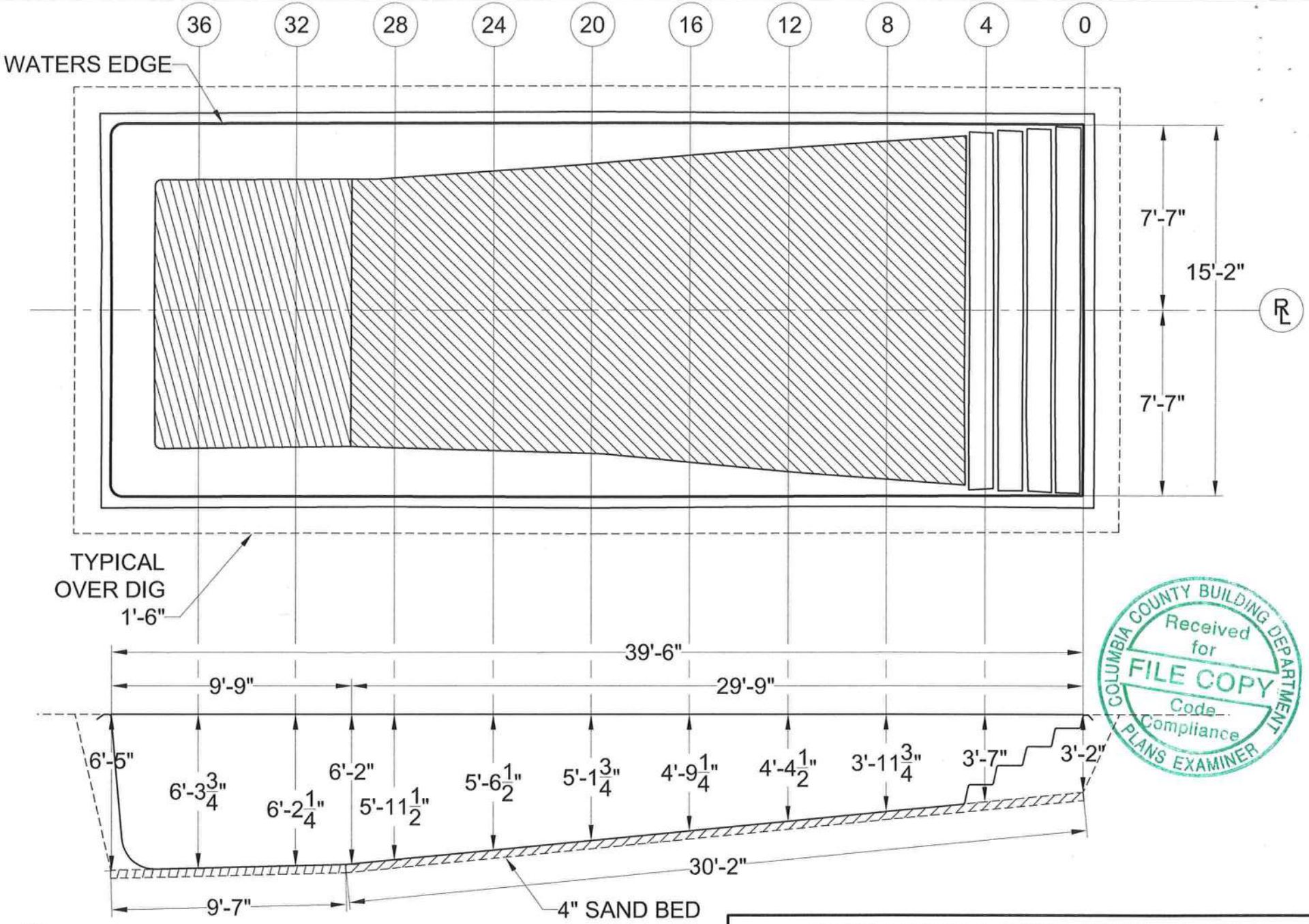

COLUMBIA COUNTY BUILDING DEPARTMENT
Received for
FILE COPY
Code Compliance
PLANS EXAMINER

San Juan Fiberglass Pools

WEIGHT:	3400 LBS
AREA:	602 SQ FT
PERIMETER:	109 FT
VOLUME:	20600 GAL

OCEANSIDE 590 - DIG PLAN

SCALE 3/16"=1'-0"	DATE 08-31-05
DRAWN BY KLB	REVISION 01

ALL MEASUREMENTS AND QUANTITIES ARE BASED ON AVERAGES

NOTICE OF COMMENCEMENT
FS 713.13

RAMCO FORM 409

Return to: (enclose self-addressed stamped envelope

Name: Advantage Pools

Address: 757 S.W. SR. 247 Suite 101 Lake City FL 32025

This Instrument Prepared by:

Name: Advantage Pools

Address: 757 S.W. SR. 247 Suite 101 Lake City FL 32025

Property Appraisers Parcel Identification

COLUMBIA COUNTY BUILDING DEPARTMENT
Received for
FILE COPY
Code Compliance
PLANS EXAMINER

Inst. 201112001013 Date:1/21/2011 Time:3:36 PM
DC,P.DeWitt Cason,Columbia County Page 1 of 1 B.1208 P:1433

386-758-7522

SPACE ABOVE THIS LINE FOR PROCESSING DATA — SPACE ABOVE THIS LINE FOR RECORDING DATA

NOTICE OF COMMENCEMENT

Permit No._____ Tax Folio No. _____

State of Florida
County of Columbia }

The undersigned hereby gives notice that improvements will be made to certain real property, and in accordance with chapter 713 of the Florida Statutes, the following information is provided in this NOTICE OF COMMENCEMENT.

Legal description of property (include Street Address, if available) 249 NW Live Oak Place Lake City FL - Lot 5 Block C - Oakhaven S/D. OR 843-358, Trust 923-C-2, 969-2331, 9771-2332 WD 1014-C3 WD 1192-2385

General description of improvements Swimming Pools & screen Enclosure.

Owner's Name Everett Parker

Address 249 NW Live Oak Place Lake City, FL 32025

Owner's interest in site of the improvement _____

Fee Simple Title holder (if other than owner) SAME

Address _____ Phone: _____ Fax: _____

Contractor Advantage Pools

Address 757 S.W. SR. 247 Suite 101 Lake City FL 32025 Phone: 386-758-7522 Fax: 386-758-6932

Surety _____ Phone: _____ Fax: _____

Address _____ Amount of bond $ _____

Lender's Name _____

Address: _____ Phone: _____ Fax: _____

Persons within the State of Florida designated by owner upon whom notices or other documents may be served as provided by Section 713.13(1)(a)7, Florida Statutes.

Name Ray Lussier

Address 757 SR 247 Suite 101 Phone: 386-758-7522 Fax: 386-758-6932

In addition to himself, owner designates Frank Federmeyer

of Advantage Pools Inc. Phone: 386-758-7522 Fax: 386-758-6932

to receive a copy of the Lienor's Notice as provided in Section 713.13(1)(b), Florida Statutes.

Expiration date of Notice of Commencement (the expiration date is 1 year from the date of recording unless a different date is specified)

x Everett L Parker
Signature of Owner

x Everett L. PARKER
Printed Name of Owner

NOTARY RUBBER STAMP SEAL

STEPHANIE L PARKER
MY COMMISSION # DD760555
EXPIRES February 20, 2012
(407) 398-0153 FloridaNotaryService.com

I have relied upon the following identification of the Affiant FL Driver's License P620-212-45-457-0

Sworn to and subscribed before me this 21st day of Jan, 2011

Stephanie L. Parker
Notary Signature

Stephanie L Parker
Printed Name

10 01 05

GForm Design, Remitate Paper & Printing Co., Inc., 1994

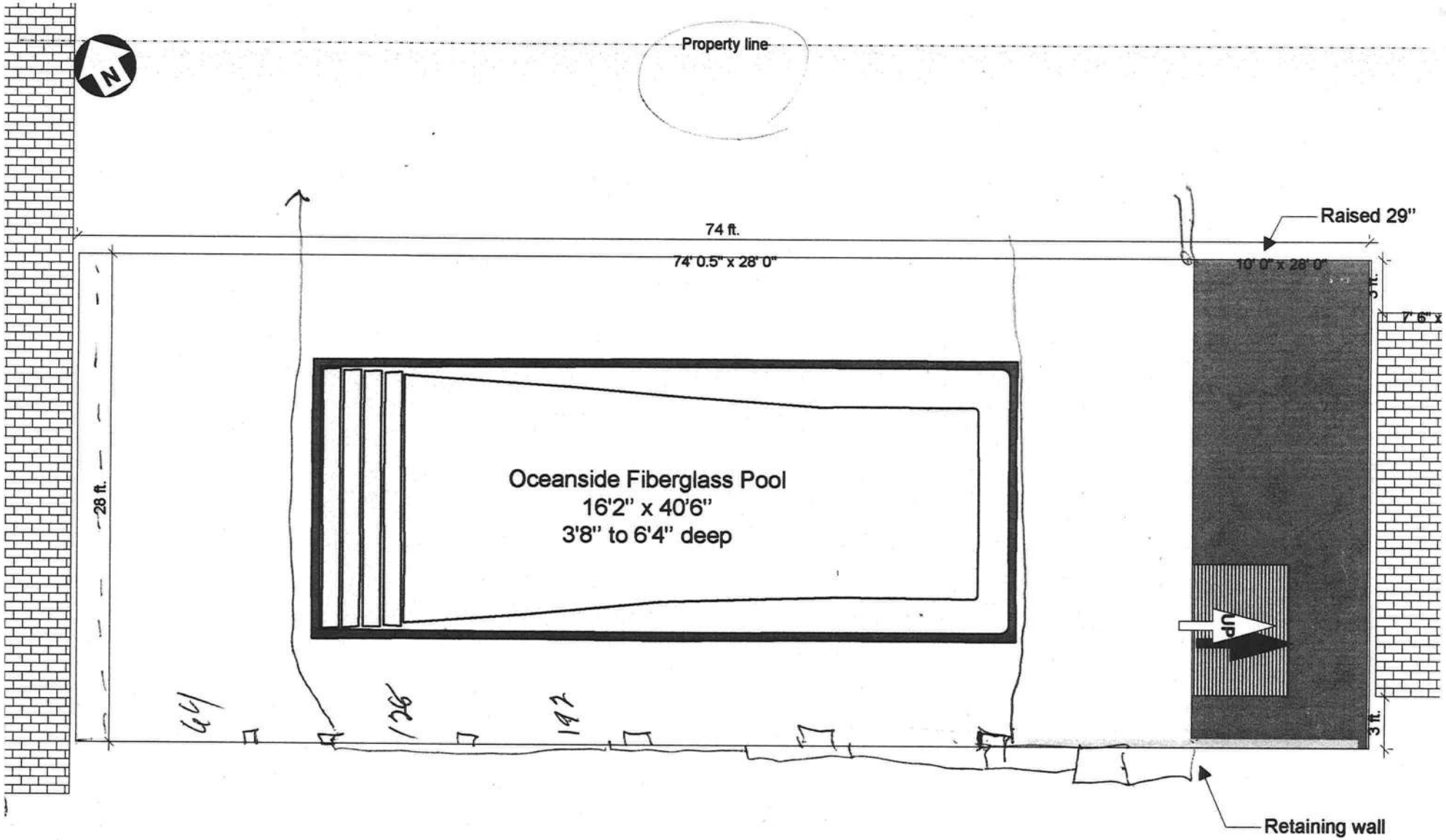

Advantage Pools **757 SW SR 247 Suite 101** **Lake City FL 32025**	**Phone: 386-758-7522** **Fax: 386-758-6932**	**Designed by:** **Ray Lussier**	**Accepted by:** **Everett Parker**

ALL MEASUREMENTS TO WATERS EDGE - ADD PREFERRED OVERDIG

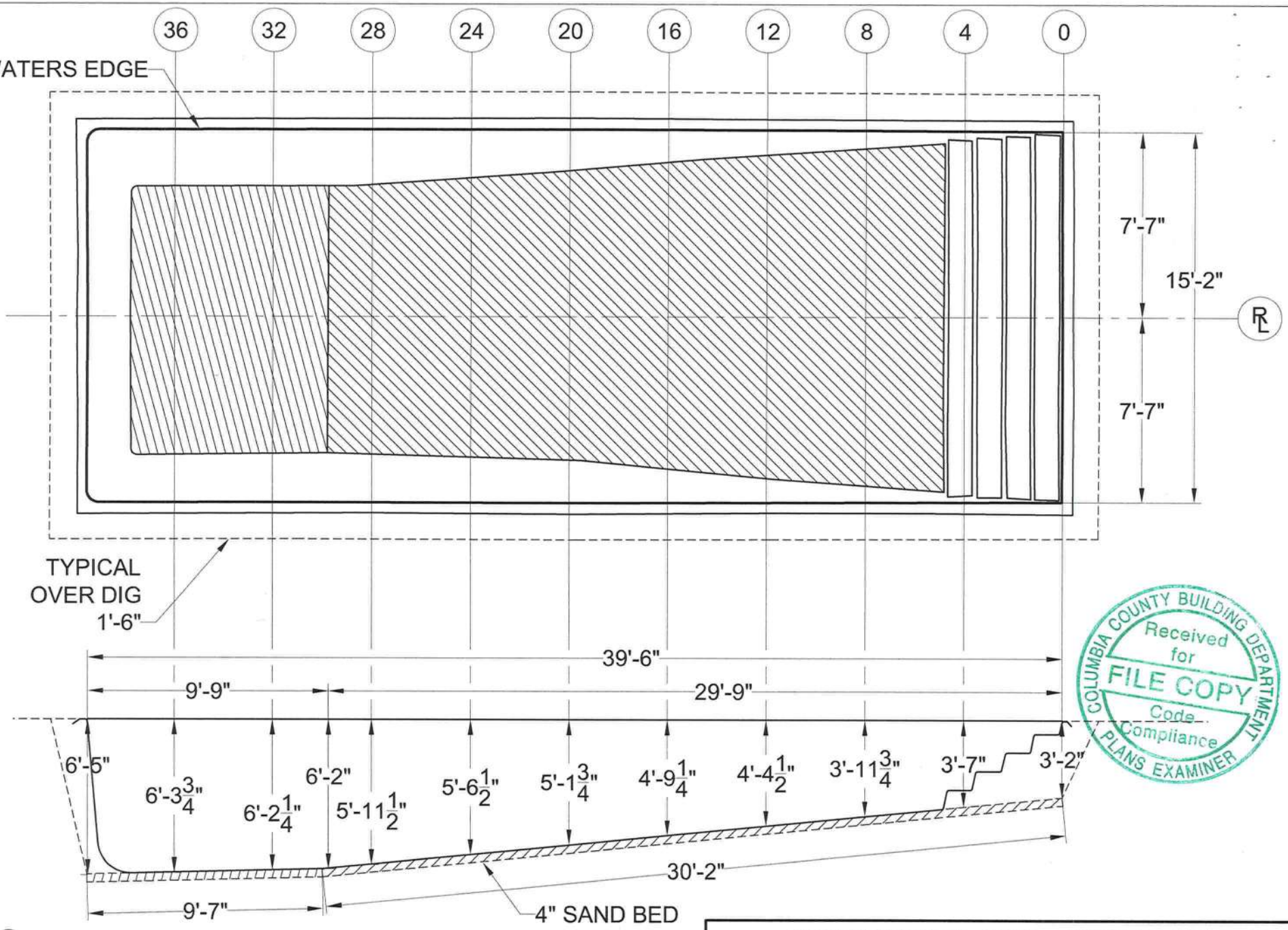

COLUMBIA COUNTY BUILDING DEPARTMENT
Received for FILE COPY
Code Compliance
PLANS EXAMINER

San Juan Fiberglass Pools

WEIGHT:	3400 LBS
AREA:	602 SQ FT
PERIMETER:	109 FT
VOLUME:	20600 GAL

OCEANSIDE 590 - DIG PLAN

SCALE 3/16"=1'-0"	DATE 08-31-05
DRAWN BY KLB	REVISION 01

ALL MEASUREMENTS AND QUANTITIES ARE BASED ON AVERAGES

NOTICE OF COMMENCEMENT
FS 713.13

RAMCO FORM 409

Return to: (enclose self-addressed stamped envelope

Name: Advantage Pools

Address: 757 S.W. SR. 247 Suite 101 Lake City FL 32025

This Instrument Prepared by:

Name: Advantage Pools

Address: 757 S.W. SR. 247 Suite 101 Lake City FL 32025

Property Appraisers Parcel Identification

COLUMBIA COUNTY BUILDING DEPARTMENT
Received for FILE COPY
Code Compliance
PLANS EXAMINER

Inst. 201112001013 Date:1/21/2011 Time:3:36 PM
DC,P.DeWitt Cason,Columbia County Page 1 of 1 B.1208 P.1433

386-758-7522

SPACE ABOVE THIS LINE FOR PROCESSING DATA — SPACE ABOVE THIS LINE FOR RECORDING DATA

NOTICE OF COMMENCEMENT

Permit No._____ Tax Folio No. _____

State of Florida
County of Columbia }

The undersigned hereby gives notice that improvements will be made to certain real property, and in accordance with chapter 713 of the Florida Statutes, the following information is provided in this NOTICE OF COMMENCEMENT.

Legal description of property (include Street Address, if available) 249 NW Live Oak Place Lake City FL - Lot 5 Block C - Oakhaven S/D. PB 843-358, Trust 923-C2, 969-2331, 9761-2332 WD 1014-C3 WD 1192-2385

General description of improvements Swimming Pools & screen Enclosure.

Owner's Name Everett Parker

Address 249 NW Live Oak Place Lake City, FL 32025

Owner's interest in site of the improvement _____

Fee Simple Title holder (if other than owner) SAME

Address _____ Phone: _____ Fax: _____

Contractor Advantage Pools

Address 757 S.W. SR. 247 Suite 101 Lake City FL 32025 Phone: 386-758-7522 Fax: 386-758-6932

Surety _____ Phone: _____ Fax: _____

Address _____ Amount of bond $ _____

Lender's Name _____

Address: _____ Phone: _____ Fax: _____

Persons within the State of Florida designated by owner upon whom notices or other documents may be served as provided by Section 713.13(1)(a)7, Florida Statutes.

Name Ray Lussier

Address 757 SW SR 247 Suite 101 Phone: 386-758-7522 Fax: 386-758-6932

In addition to himself, owner designates Frank Federmeyer

Of Advantage Pools Inc. Phone: 386-758-7522 Fax: 386-758-6932

to receive a copy of the Lienor's Notice as provided in Section 713.13(1)(b), Florida Statutes.

Expiration date of Notice of Commencement (the expiration date is 1 year from the date of recording unless a different date is specified)

x Everett L Parker
Signature of Owner

x Everett L. PARKER
Printed Name of Owner

NOTARY RUBBER STAMP SEAL

STEPHANIE L PARKER
MY COMMISSION # DD760555
EXPIRES February 20, 2012
(407) 398-0153 FloridaNotaryService.com

I have relied upon the following identification of the Affiant FL Driver's License P620-212-45-457-0

Sworn to and subscribed before me this 21st day of Jan, 2011

Stephanie L. Parker
Notary Signature

Stephanie L. Parker
Printed Name

Gilman Design, Sealants Paper & Printing Co., Inc., 1994
10 01 96

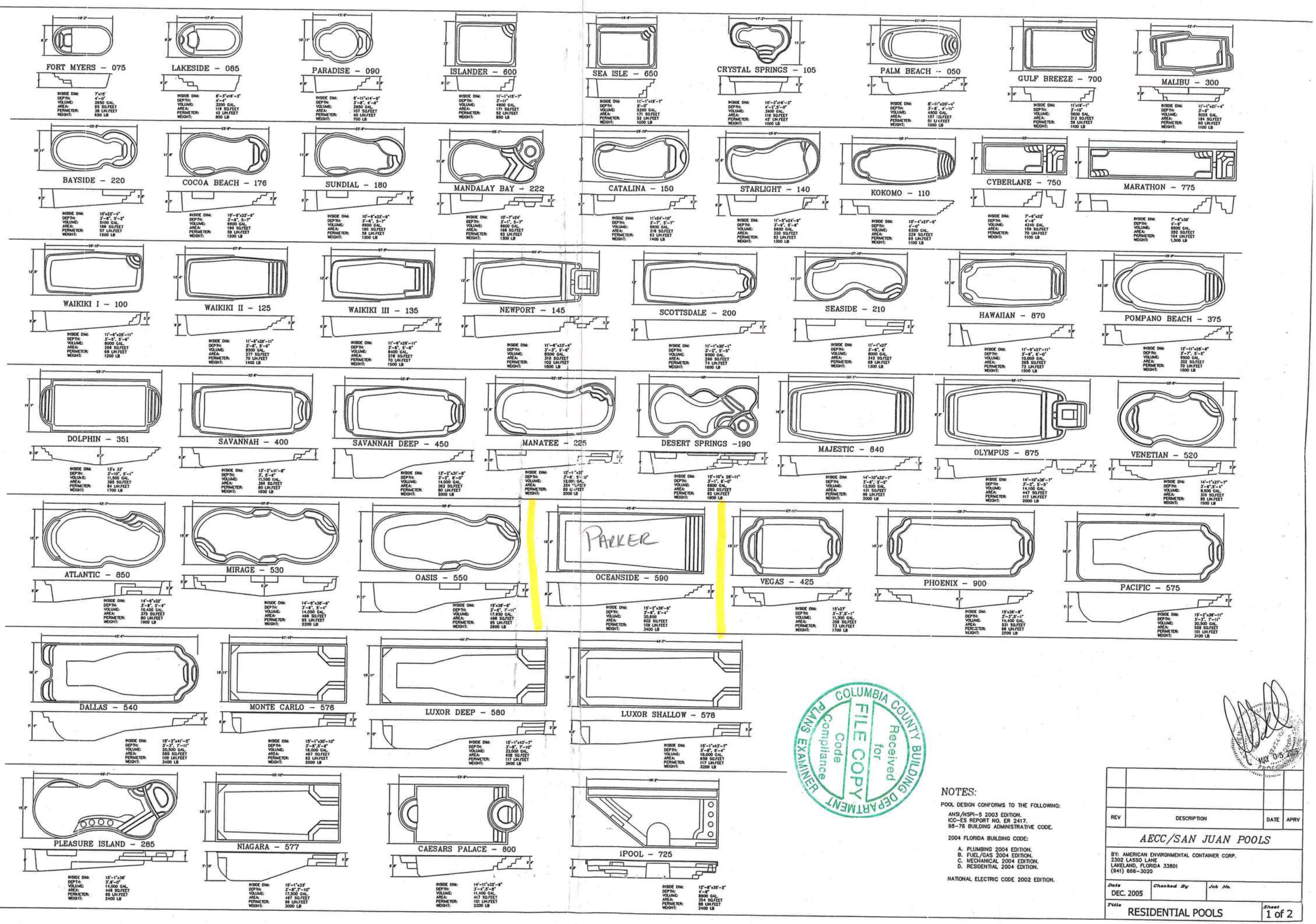

COLUMBIA COUNTY BUILDING DEPARTMENT
PLANS EXAMINER
Code Compliance
FILE COPY
Received for

MAY 05 2005

NOTES:

POOL DESIGN CONFORMS TO THE FOLLOWING:

ANSI/NSPI-5 2003 EDITION.
ICC-ES REPORT NO. ER 2417.
98-76 BUILDING ADMINISTRATIVE CODE.

2004 FLORIDA BUILDING CODE:

A. PLUMBING 2004 EDITION.
B. FUEL/GAS 2004 EDITION.
C. MECHANICAL 2004 EDITION.
D. RESIDENTIAL 2004 EDITION.

NATIONAL ELECTRIC CODE 2002 EDITION.

REV	DESCRIPTION	DATE	APRV

AECC/SAN JUAN POOLS

BY: AMERICAN ENVIRONMENTAL CONTAINER CORP.
2302 LASSO LANE
LAKELAND, FLORIDA 33801
(941) 666-3020

Date	Checked By	Job No.
DEC. 2005		

Title: RESIDENTIAL POOLS

Sheet: 1 of 2

GENERAL CONSTRUCTION NOTES:

1) — Pool installation shall be by a qualified and licensed (approved by local building department and San Juan pools) pool contractor. The installation shall conform to all state and local building codes, as well as tenants of any association with Jurisdiction.

2) — Water supply and disposal shall be so arranged that there is no cross connection with domestic service.

3) — Main drain cover to be certified as compliant with ANSI/ASME A112.19.8M or a grate with a minimum open area of 144 sq. in. or as to local codes, securely fastened in place.

4) — Pool turnover shall be 12 hours maximum with cartridge filter and properly grounded approved pump (min. 1/2 hp per 50 GPM at 55 TDH.) Pool pump to be above ground with weather protective housing.

5) — All electric shall conform to N.E.C. No overhead wires shall pass within 10 feet of pool.

6) — Concrete shall be 2500 psi at 28 days. Pool bottom to be placed in 4" Min. of sand. Conc. Slab to have 6x6, #10/10wwm . Fibermesh conc. may be used in lieu of 6x6 #10/10wm as allowed by code.

7) — Hydrostatic pressure: design assumes pool is full at all times, with any required hold downs and reinforcing by others.

8) — Hydrostatic relief valve not credited for more that 2 feet of the difference of head between pool bottom and floor criteria level, use where code requires.

9) — Pool shall bear on undisturbed soil, free of peat, muck or other deleterious material of any significant amount.

10) — Backfill shall have bearing value greater that 500 PSF with Vertical angle of Repose. Back-fill material must not contain rocks that could damage pool walls. Back-fill shall be installed and compacted in lifts to match water level in pool and not deform pool.

11) — Steps or ladders shall be provided at each end of pool per code.

12) — Pool ladders shall be corrosion resistant with non-slip treads. Hand rails and ladders shall have No. 8 solid copper grounds and Solidly imbedded anchors.

13) — Steps, treads and risers shall conform to local codes when different than that shown.

14) — Therapy seats, where installed, shall be recessed in to the sides of such pool not more than 20 inches below water level, and in such a manner as to clearly distinguish such underwater obstructions from pool areas in to which persons may dive.

15) — Swimming pool skimmer(s) shall have deck openings.

16) — Electrical hook-up of pool equipment, rails, boxes, etc and grounding of deck steel shall be in accordance with the National Electrical Code and all applicable state and local building codes by a licensed electrical contractor.

17) — Install 12 volt light. When allowed by local code. Higher voltage shall be GFI protected per NEC. At installers option Fiberoptic Lighting may be used.

18) — If the slope from shallow end to deep end is more than 1:7 a safety rope shall be provided when required.

19) — Supports and steps shall be properly reinforced and of sufficient structural strength to safely carry all anticipated loads.

20) — All pipe to be PVC schedule40 suitable for potable water, or to local code.

21) — Direct suction pipes from the pool shall have Secondary Relief.

22) — All fittings per 2004 Florida Building Code.

23) — Max. velocity in pressure piping to be 10' per second.

24) — Max. velocity in suction piping to be 8' per second.

POOL EQUIPMENT AND PROPERTIES

Quantity	Item	Manufacturer
*	Inlet-Return 1 1/2" white cycolac Model SP-1032	Hayward MFG. Co. or Equal.
*	Inlet-Directional Flow white cycolac "Hydro-stream" with 1/2" hole, Model SP-1419-C	Hayward MFG. Co. or Equal.
*	Main Drain Anti-Vortex Model SP-1048-AV or 1035-AV	Hayward MFG. Co. or Equal.
*	Hydrostatic Relief Valve Model SP-1056	Hayward MFG. Co. or Equal.
*	Skimmer Model SP-1076	Hayward MFG. Co. or Equal.
*	Niche Light Assembly PVC SP607 with 1" Conduit connection	Hayward MFG. Co. or Equal.
*	Light Assembly 100 watt, 12 volt with Power Cord	American Products Co. or Equal.

* Quantities Specified at Construction

Typical properties of a REINFORCED FIBERGLASS pool:

Barcol hardness of 30 mil gel coat	40 – 50
Glass content by weight	27%
Tensile strength, PSI at 77 F	19,500
Tensile elongation	1 – 2%
Flexural strength, PSI at 77 F	23,800 – 27,600
Flexural modulus, PSI x 10 at 77 F	0.72 – 0.77
Izod Impact FT-LBS/inch of notch	5.9
Compressive strength, PSI	25,000 to 38,000
Typical thickness inches	3/8"

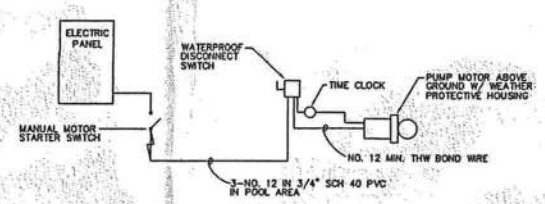

ELECTRICAL DIAGRAM
NTS

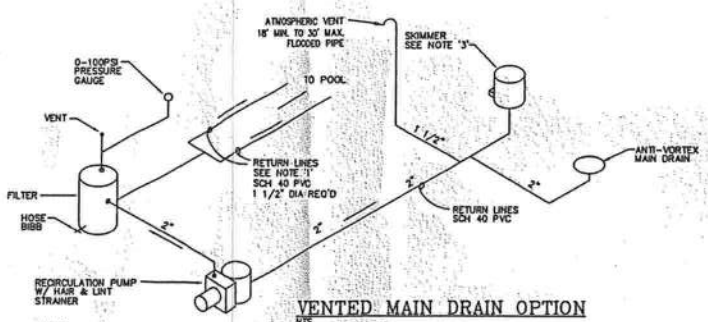

VENTED MAIN DRAIN OPTION
NTS

NOTES:

(1) AT LEAST ONE RETURN LINE IS REQUIRED FOR EVERY 300 SQ. FT. OF SURFACE AREA. MINIMUM SEPARATION OF LINES ENTERING POOL SHALL BE 10 FT.

(2) SUMP LINE (WHEN REQ'D) TO BE 2 SCH. 40 PVC FROM 4 CUBIC FOOT GRAVEL BED BENEATH MAIN DRAIN TO 18" FROM EQUIPMENT.

(3) TWO SKIMMERS REQUIRED IF POOL AREA GREATER THAN 800 SF.

(4) SKIMMER AND MAIN DRAIN MUST BE PLUMBED TOGETHER WITH A COMMON LINE TO THE PUMP. SKIMMER AND MAIN DRAIN CAN NOT BE VALVED SEPARATELY.

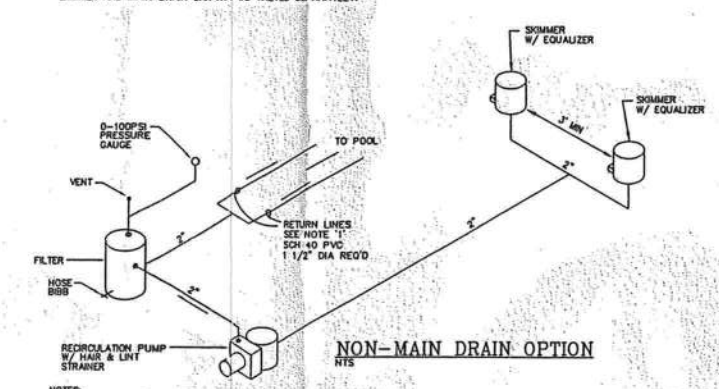

NON-MAIN DRAIN OPTION
NTS

NOTES:

(1) AT LEAST ONE RETURN LINE IS REQUIRED FOR EVERY 300 SQ. FT. OF SURFACE AREA. MINIMUM SEPARATION OF LINES ENTERING POOL SHALL BE 10 FT.

(2) SUMP LINE (WHEN REQ'D) TO BE 2" SCH. 40 PVC FROM 4 CUBIC FOOT GRAVEL BED BENEATH MAIN DRAIN TO 18" FROM EQUIPMENT.

(3) SKIMMERS MUST BE PLUMBED TOGETHER WITH A COMMON LINE TO THE PUMP. SKIMMERS CAN NOT BE VALVED SEPARATELY.

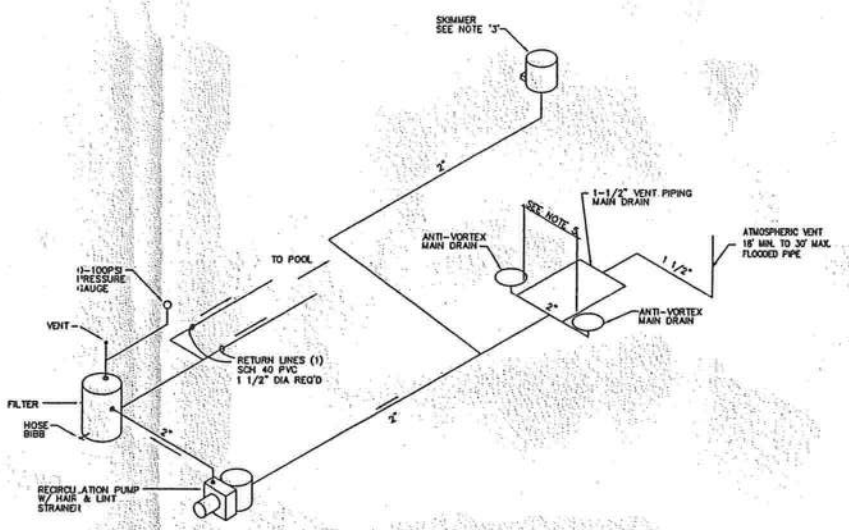

ATMOSPHERIC VENT OPTION
NTS

NOTES:

(1) AT LEAST ONE RETURN LINE IS REQUIRED FOR EVERY 300 SQ. FT. OF SURFACE AREA. MINIMUM SEPARATION OF LINES ENTERING POOL SHALL BE 10 FT.

(2) SUMP LINE (WHEN REQ'D) TO BE 2" SCH. 40 PVC FROM 4 CUBIC FOOT GRAVEL BED BENEATH MAIN DRAIN TO 18" FROM EQUIPMENT.

(3) TWO SKIMMERS REQUIRED IF POOL AREA GREATER THAN 800 SF.

(4) MAIN DRAIN LOCATED NEAR DEEPEST PART OF THE POOL.

(5) POOL MUST HAVE MAIN DRAIN MINIMUM 3'-0" APART OR SEPARATED ON DIFFERENT PLANES.

(6) MAIN DRAINS MUST BE PLUMBED TOGETHER WITH A COMMON LINE TO THE PUMP. MAIN DRAINS CAN NOT BE VALVED SEPARATELY.

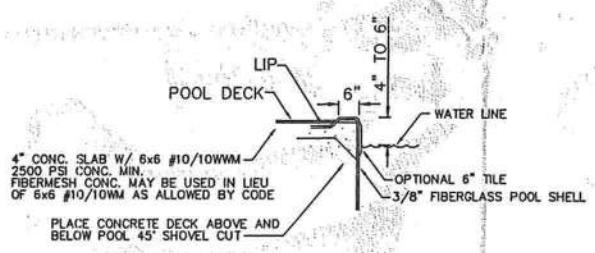

ALTERNATE COPING DETAIL
NOT TO SCALE

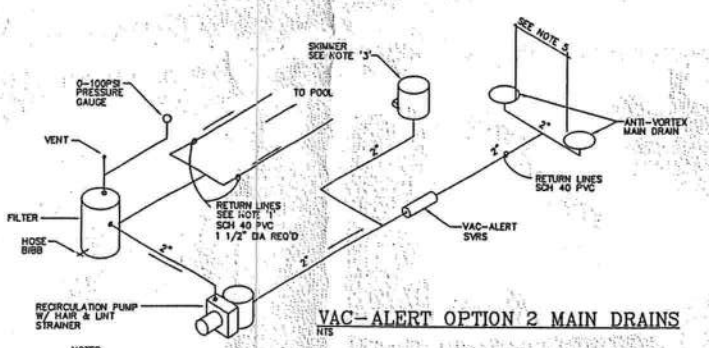

VAC-ALERT OPTION 2 MAIN DRAINS
NTS

NOTES:

(1) AT LEAST ONE RETURN LINE IS REQUIRED FOR EVERY 300 SQ. FT. OF SURFACE AREA. MINIMUM SEPARATION OF LINES ENTERING POOL SHALL BE 10 FT.

(2) SUMP LINE (WHEN REQ'D) TO BE 2" SCH. 40 PVC FROM 4 CUBIC FOOT GRAVEL BED BENEATH MAIN DRAIN TO 18" FROM EQUIPMENT.

(3) TWO SKIMMERS REQUIRED IF POOL AREA GREATER THAN 800 SF.

(4) MAIN DRAINS MUST BE PLUMBED TOGETHER WITH A COMMON LINE TO THE PUMP. MAIN DRAINS CAN NOT BE VALVED SEPARATELY.

(5) MAIN DRAINS TO BE MIN. 3' APART OR ON DIFFERENT PLANES.

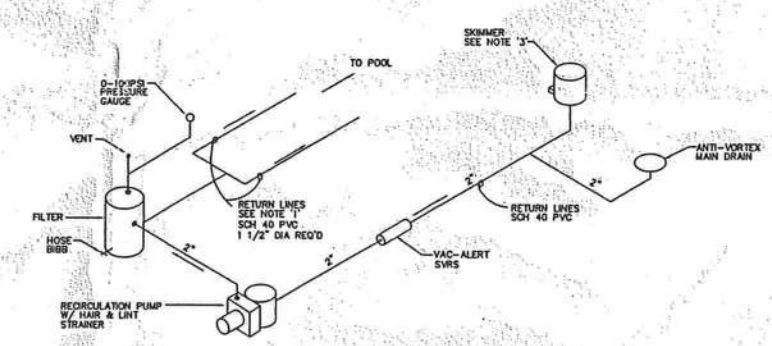

VAC-ALERT OPTION
NTS

NOTES:

(1) AT LEAST ONE RETURN LINE IS REQUIRED FOR EVERY 300 SQ. FT. OF SURFACE AREA. MINIMUM SEPARATION OF LINES ENTERING POOL SHALL BE 10 FT.

(2) SUMP LINE (WHEN REQ'D) TO BE 2" SCH. 40 PVC FROM 4 CUBIC FOOT GRAVEL BED BENEATH MAIN DRAIN TO 18" FROM EQUIPMENT.

(3) TWO SKIMMERS REQUIRED IF POOL AREA GREATER THAN 800 SF.

(4) SKIMMER AND MAIN DRAIN MUST BE PLUMBED TOGETHER WITH A COMMON LINE TO THE PUMP. SKIMMER AND MAIN DRAIN MUST NOT BE VALVED SEPARATELY.

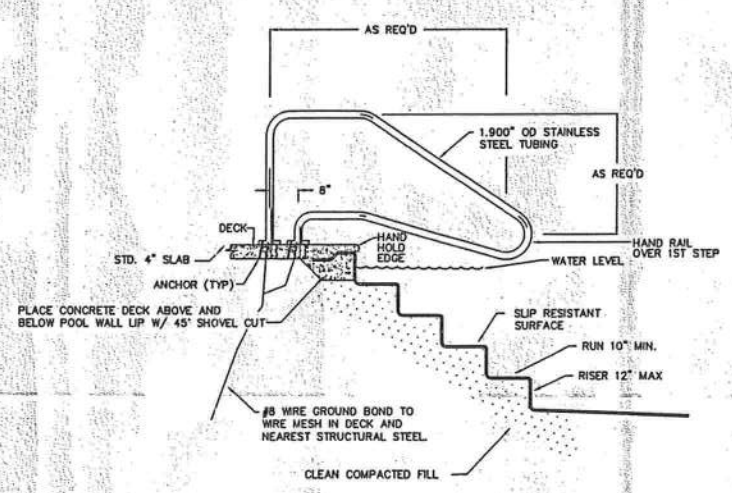

STEP HANDRAIL SECTION
NOT TO SCALE

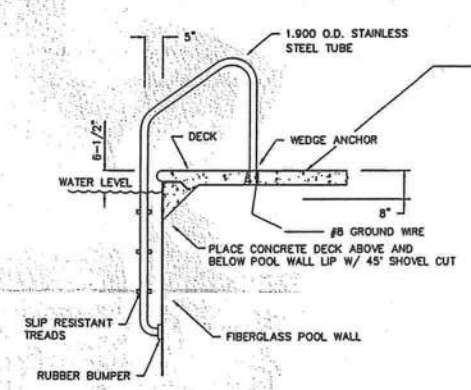

LADDER SECTION
NOT TO SCALE

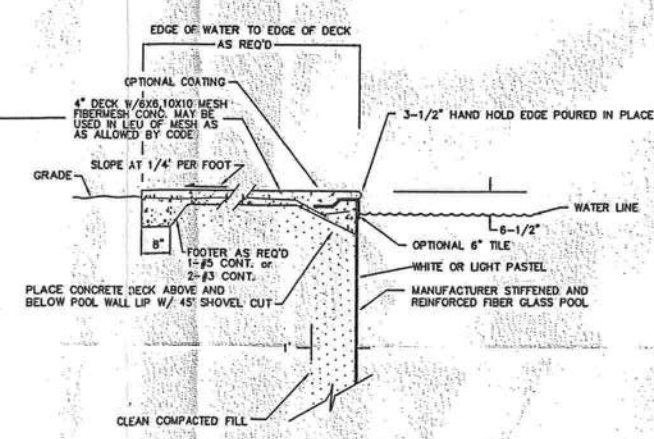

WALL SECTION
NOT TO SCALE

MAY 05 2006

NOTES:

POOL DESIGN CONFORMS TO THE FOLLOWING:

ANSI/NSPI-5 2003 EDITION.
ICC-ES REPORT NO. ER 2417.
98-76 BUILDING ADMINISTRATIVE CODE.

2004 FLORIDA BUILDING CODE:

A. PLUMBING 2004 EDITION.
B. FUEL/GAS 2004 EDITION.
C. MECHANICAL 2004 EDITION.
D. RESIDENTIAL 2004 EDITION.

NATIONAL ELECTRIC CODE 2002 EDITION.

REV	DESCRIPTION	DATE	APRV

AECC/SAN-JUAN POOLS

BY: AMERICAN ENVIRONMENTAL CONTAINER CORP.
2302 LASSO LANE
LAKELAND, FLORIDA 33801
(941) 668-3020

Date	Checked By	Job No.
10-27-05	KLB	

Title: SPECIFICATIONS/DETAILS

Sheet 2of2