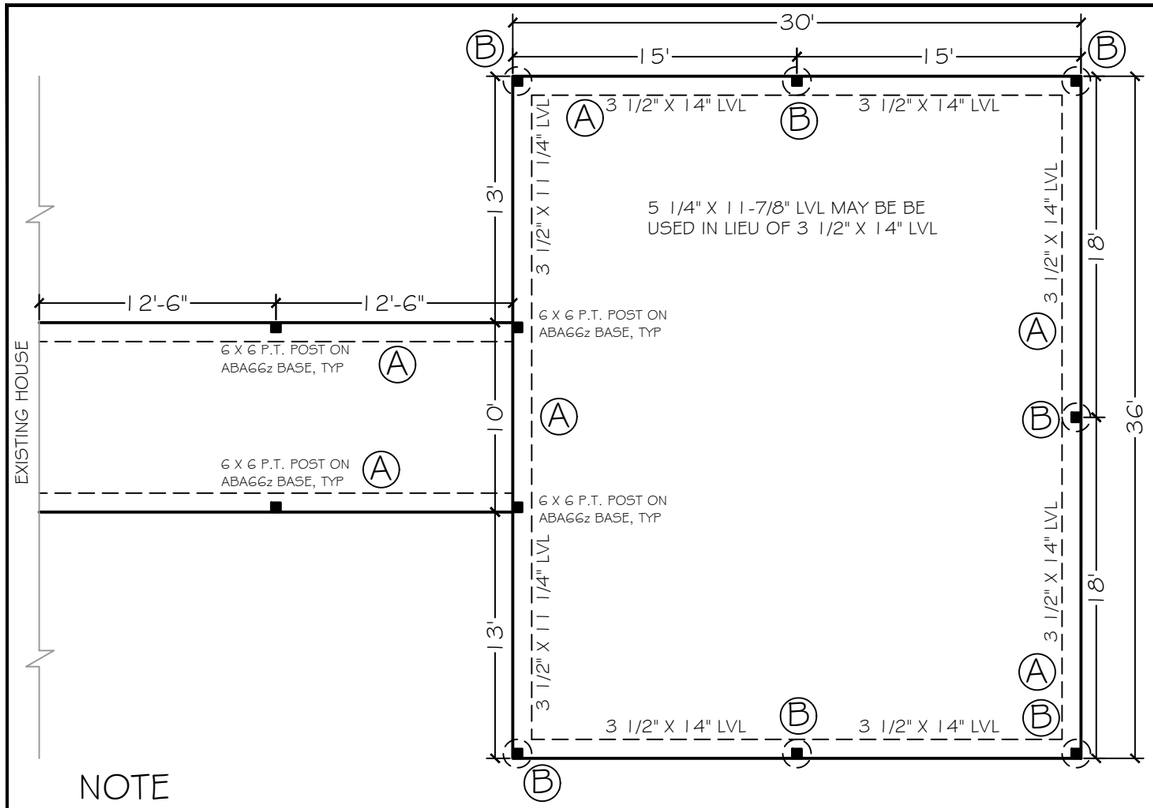

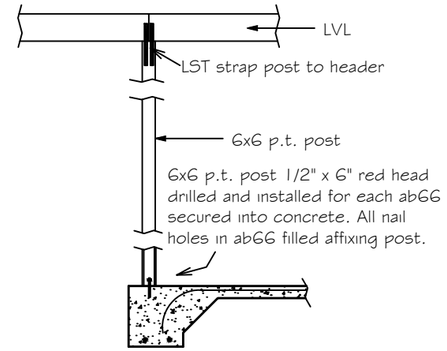

LVL detail connection

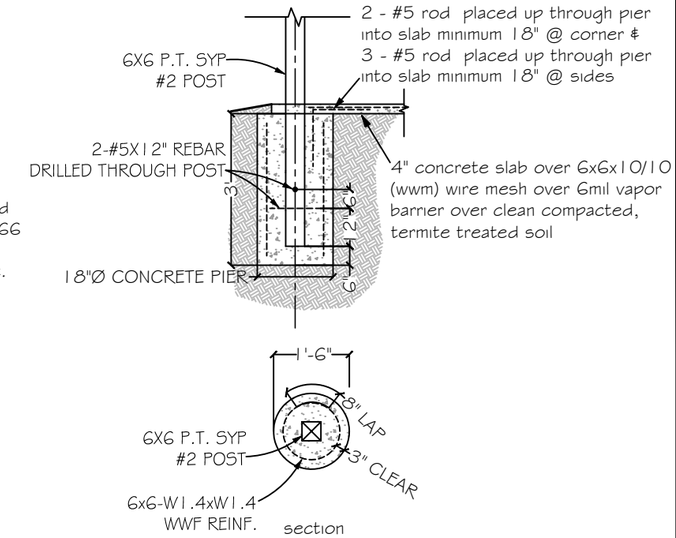

B Embedded post detail

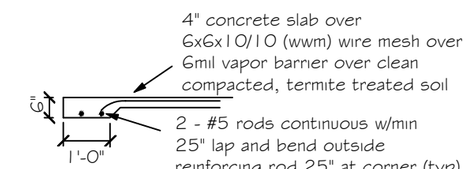

A thickened edge slab detail at carport

NOTE

7/16" O.S.B. NAILED WITH 8D 6" O.C. IN FIELD & 4" O.C. ON EDGES

DESIGN SPECIFICATIONS

- DESIGN CODES:
  2017 FLORIDA BUILDING CODE (FBC) - RESIDENTIAL
  ASCE 7-10, 2005
  NDS, ACI, ATIC, AWPA, APA, ICC 600-08
- OCCUPANCY: RESIDENTIAL GROUP R-3 (ONE- AND TWO-FAMILY DWELLINGS
- DESIGN LOADS:
  ROOF CONVENTIONAL FRAMING:
  LL 20 PSF RAFTERS
  LL 20 PSF CEILING JOISTS
  DL 10 PSF RAFTERS
  DL 10 PSF CEILING JOISTS
  DL 30 PSF ATTICS WITH STORAGE
  DL 10 PSF ATTICS W/O STORAGE
  FLOORS:
  LL 40 PSF TOP CHORD
  LL 0 PSF BOTTOM CHORD
  DL 10 PSF TOP CHORD
  DL 5 PSF BOTTOM CHORD
- NUMBER OF STORIES: 1
- TYPE OF CONSTRUCTION: TYPE V-6, UNPROTECTED, UNSPRINKLERED
  WIND ZONE INFORMATION
  BUILDING: UNENCLOSED STRUCTURE
  ULTIMATE DESIGN WIND SPEED: 130 MPH
  NOMINAL DESIGN WIND SPEED: 110 MPH
  BUILDING RISK CATEGORY: II
  WIND EXPOSURE CATEGORY: C

FOUNDATION NOTES

1. THE SLAB SHALL BE 4" CONCRETE SLAB REINFORCED w/ 6X6-1.4/1.4 WELDED WIRE MESH PLACED ON CHAIRS 1 $\frac{1}{2}$" DEPTH OR FIBER MESH CONCRETE, 6-MIL POLY VAPOR BARRIER w/ 6" LAPS SEALED w/ POLY TAPE OVER TERMITE-TREATED & COMPACTED FILL
2. BOTTOM OF EXTERIOR FOOTINGS SHALL BE A MINIMUM OF 12" BELOW UNDISTURBED SOIL OR ENGINEERED FILL PER FBC-RES. SECTION R403.1.4

NOTE:
SOIL UNDER FOOTING SHALL BE COMPRESSED TO 2000 PSF AT 95% DENSITY. CONCRETE STRENGTH SHALL BE 2500 PSI

NOTE

Simpson Strong-Tie Co. Strong-Drive SDWC TRUSS Screws may be used for uplift connection in lieu of straps. Strong-Drive SDWC TRUSS Screws to be installed per manufacturer's specifications.

Simpson Strong-Tie Co. Titen HD Heavy-Duty Screw Anchors 5/8" x 8", maximum spacing of 6'-0" o.c., may be used in lieu of 5/8"x10" anchor bolts with 3"x3"x1/8" washer. Titen HD Heavy-Duty Screw Anchors shall be installed per manufacturer's specifications.

ROOF SHEATHING FASTENING

- 4" O.C. GABLE END
- 6" O.C. EDGES (ALL ZONES)
- 6" O.C. INTERMEDIATE FRAMING (ZONE 3)
- 12" O.C. INTERMEDIATE FRAMING (ZONES 1 & 2)

SEE FIGURE R803.2.3.1, SECTION R803.1, 2017 FLORIDA BUILDING CODE - RESIDENTIAL, SIXTH EDITION FOR ROOF SHEATHING NAILING ZONES

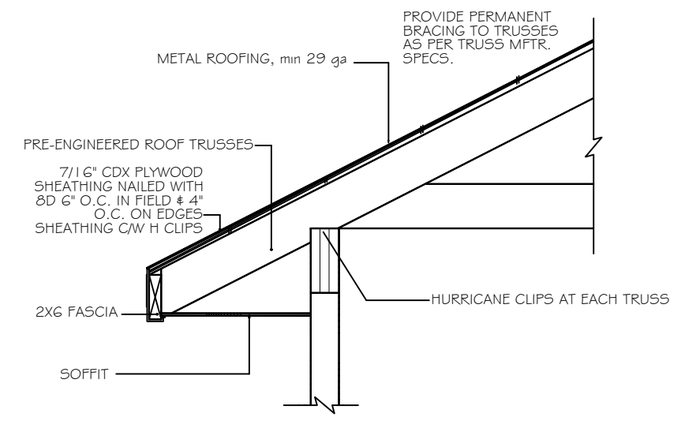

4" STUD EAVE

ROOF NOTES

ROOF PITCH LESS THEN 4/12 DBL LAYER OF UNDERLAYMENT IS REQUIRED

OVERLAP ROOFING UNDERLAYMENT 4'(MIN) OVER HIPS AND RIDGES

BUTTON CAP NAILS ARE USED TO FASTEN UNDERLAYMENT TO ROOF DECK WHEN SHINGLES NOT INSTALLED SAME DAY

DRIP EDGE INSTALLED OVER THE UNDERLAYMENT AT RAKES AND UNDER THE UNDERLAYMENT AT EAVES

ALL ROOF PENETRATIONS ARE PROPERLY FLASHED W/ FLASHING OF THE CORRECT SIZE FOR THE PENETRATION

METAL ROOFING ATTACHED W/ CORRECT FASTENERS PER CODE AND MANUFACTURERS SPECS

1" SPACE IS MAINTAINED BETWEEN THE END OF THE GUTTER AND THE WALL CLADDING

CAROL J. CHADWICK LICENSE No. 82560 STATE OF F.L.O.R.I.D.A. PROFESSIONAL ENGINEER

Carol Chadwick, PE
cn=Carol Chadwick, PE, o=This item has been electronically signed and sealed by Carol Chadwick, PE using a digital signature., ou, email=ccpewyo@gmail.com, c=US
2020.08.09 12:03:32 -04'00'

CAROL CHADWICK P.E.
CERTIFICATE OF AUTHORIZATION 12607
1008 SW Brown Circle
Lake City, FL 32025
Tel: 352-365-3972
Fax: 352-365-3972
Email: ccpewyo@gmail.com
Web: www.carolchadwickpe.com
FLORIDA ♦ WYOMING ♦ N.C.E.E.S.
OREGON ♦ CALIFORNIA ♦ N.C.E.E.S.

CAROL J. CHADWICK LICENSE No. 82560 STATE OF F.L.O.R.I.D.A. PROFESSIONAL ENGINEER

REVISION DESCRIPTION

DATE

PREPARED FOR
BRYAN ZECHER CONSTRUCTION
386.752.8653
bczecher@comcast.net

DICKS CARPORT
FOUNDATION PLAN AND DETAILS

PROJECT NO. FL20129
DATE AUG. 9, 2020
REVISION DATE
SHEET S-1

C:\CONSULTING\JOB FILES\PLAN REVIEW\FL20129-DICKS CARPORT\DETAILS\FL20129 S-1.dwg, 8/9/2020 12:02:50 PM