EAST 60 FT OF LOT 4 & ALL LOT
5 BLOCK 4 ELM ACRES S/D.

CHIEUW ERIK/MILES EMMA
294 SE MULBERRY PL
LAKE CITY, FL 32025

2024

16-4S-17-08371-000

COLUMBIA COUNTY PROPERTY

BUILDING CHARACTERISTICS

ELEMENT	CD	CONSTRUCTION
Exterior Wall	19	COMMON BRK 80
Exterior Wall	32	HARDIE BRD 20
Roof Structur	08	IRREGULAR 100
Roof Cover	03	COMP SHNGL 100
Interior Wall	05	DRYWALL 100
Interior Floo	13	LAM/VNLPLK 100
Air Condition	03	CENTRAL 100
Heating Type	04	AIR DUCTED 100
Bedrooms		3 100
Bathrooms		2 100
Frame	01	NONE 100
Stories	1.	1. 100
Architectual	05	CONV 100
Units		0 100
Condition Adj	03	03 100
Kitchen Adjus	01	01 100
Quality	06	06
DOR CODE	0100	SINGLE FAMILY
MAP NUM		MKT AREA 06
NEIGHBORHOOD/LOC	16417.010	1.00/

AREA TYPE	TOTAL GROSS AREA	PCT OF BASE	TOT ADJ AREA	SUBAREA MARKET VALUE
BAS	84	100	84	8,402
BAS	144	100	144	14,402
BAS	168	100	168	16,802
BAS	228	100	228	22,804
BAS	240	100	240	24,003
BAS	1,222	100	1,222	122,218
FCP	456	25	114	11,401
FOP	64	30	19	1,900
PTO	140	5	7	700
TOTALS	2,746		2,226	222,634

MARKET ADJUSTMENTS

TYPE	MDL	EFF. AREA	TOT ADJ PTS	EFF. BASE RATE	REPL. COST NEW	AYB	EYB	ECON	FNCT		NORM	% COND
0100	01	2,226	119.7504	114.96	255,901	1972	2010	0	0	0	13.00	87.00

1 SINGLE FAM – 100% - 2023 Heated Area: 2086 HX Base Yr 2023

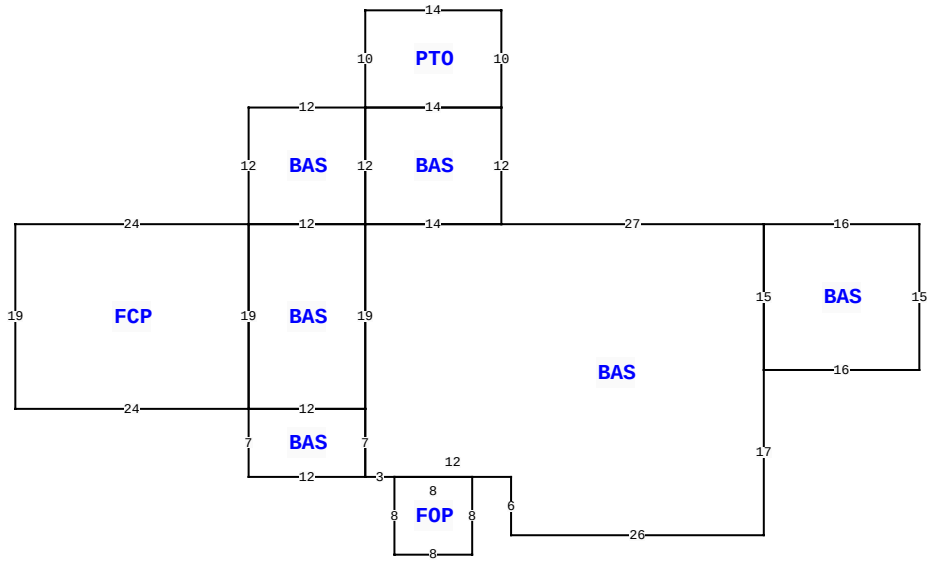

294 SE MULBERRY PL, LAKE CITY

BLD DATE		LGL DATE	
XF DATE		LAND DATE	04/21/2023 MLU
INC DATE		AG DATE	

VALUATION SUMMARY

VALUATION BY		STANDARD
Tax Group: 2	Tax Dist:	
BUILDING MARKET VALUE		222,634
TOTAL MARKET OB/XF VALUE		7,916
TOTAL LAND VALUE - MARKET		22,500
TOTAL MARKET VALUE		253,050
SOH/AGL Deduction		0
ASSESSED VALUE		253,050
TOTAL EXEMPTION VALUE	HX HB	50,000
BASE TAXABLE VALUE		203,050
TOTAL JUST VALUE		253,050
NCON VALUE		0
INCOME VALUE		
PREVIOUS YEAR MKT VALUE		255,609

PERMIT NUM	DESCRIPTION	AMT	ISSUED
08666	SFR	0	09/27/2019

SALES DATA

OFF RECORD Number	DATE	TYPE INST	Q U	V I	RSN CD	SALE PRICE
1411/1706	5/15/2020	WD	Q	I	01	233,000
GRANTOR: JAMES INGLESE						
GRANTEE: ERIK CHIEUW & EMMA						
1384/1285	5/13/2019	WD	U	I	37	50,000
GRANTOR: JOHN & REGINA DUPLER						
GRANTEE: JAMES INGLESE						

BUILDING NOTES

BUILDING DIMENSIONS

BAS= W27 BAS= N12 PTO= N10 W14 S10 E14$ W14 S12 E14$ W14 BAS= N12 W12 S12 E12$ BAS= W12 FCP= W24 S19 E24 N19$ S19 E12 N19$ S19 BAS= W12 S7 E12 N7$ S7 E3 FOP= S8 E8 N8 W8$ E12 S6 E26 N17 BAS= E16 N15 W16 S15$ N15$.

EXTRA FEATURES

LN	OB/XF CODE	DESCRIPTION	BLD	CAP	L	W	UNITS	UT	Adj R	ADJ UNIT PRICE	ORIG COND	YEAR ON	YEAR ACTUAL	Q	% COND	OB/XF MKT VALUE	NOTES
1	0296	SHED METAL	0	100	0	0	1.00	UT	0.00	0.00	100	0	0	3	100	300	
2	0166	CONC,PAVMT	0	100	0	0	1,590.00	UT	2.00	2.00	100	0	0	3	100	3,180	
3	0294	SHED WOOD/	0	100	0	0	1.00	UT	0.00	0.00	100	0	0	3	100	1,500	
4	0252	LEAN-TO W/	0	100	0	0	1.00	UT	0.00	0.00	100	2013	2013	3	100	500	
5	0166	CONC,PAVMT	0	100	3	21	63.00	UT	2.00	2.00	100	2021	2020		100	126	
6	0296	SHED METAL	0	100	0	0	1.00	UT	150.00	150.00	100	2021	2020		100	150	
7	0166	CONC,PAVMT	0	100	12	90	1,080.00	UT	2.00	2.00	100	2021	2020		100	2,160	

LAND DESCRIPTION

TOTAL OB/XF 7,916

LN	USE CODE	CLS	LAND USE DESCRIPTION	CAP	RD	LOC ZONE	FRONT	DEPTH	TOT LND UTS	UNIT TYPE	DT	DPTH FACT	% COND	TOT ADJ	UNIT PRICE	ADJ UNIT PRICE	LAND VALUE	OTHER ADJUSTMENTS AND NOTES	YEAR	DENSITY	DECL	FRZ	YR	CONSRV
1	0100	C	SFR	100		A-1	0.00	0.00	1.00	LT		1.00	1.00	1.00	22,500.00	22,500.00	22,500							

REVIEW DATE 03/24/2021 BY BC Total Acres: 1.48 Total Land Value: 22,500 Market: 0 Agricultural: 0 Common: 22,500 PRINTED 01/03/2024 BY SYS