PRODUCT APPROVAL SPECIFICATION SHEET

As required by Florida Statute 553.842 and Florida Administrative Code 9B-72, please provide the information and approval numbers on the building components listed below if they will be utilized on the construction project for which you are applying for a building permit. We recommend you contact your local product supplier should you not know the product approval number for any of the applicable listed products. Statewide approved products are listed online at www.floridabuilding.org.

Category/Subcategory	Manufacturer	Product Description	Approval Number(s)
1. EXTERIOR DOORS			
A. SWINGING	Masonite or Therma-tru	Egress swinging door	FL62514, FL43409
B. SLIDING	YKK	Egress SGD	FL7829, FL16605, FL17563
C. SECTIONAL/ROLL UP	Raynor	Garage door	FL15212
D. OTHER			
2. WINDOWS			
A. SINGLE/DOUBLE HUNG	YKK	Styleview vinyl single or double hung	FL8114, 15081, 15140, 26492
B. HORIZONTAL SLIDER	YKK	Egress SGD	FL14595
C. CASEMENT	YKK	Casement	FL15153
D. FIXED	YKK	Fixed Glass	FL8197, 15141, 21683, 26493
E. MULLION	YKK	Mullions	FL22027
F. SKYLIGHTS			
G. OTHER			
3. PANEL WALL			
A. SIDING	James Hardie	7-1/4 lap, shaker, & board-n-batten siding	FL10477, 13192, 13223
B. SOFFITS	American Construction Metals	Aluminum fascia & soffit	FL12019
C. STOREFRONTS			
D. GLASS BLOCK			
E. OTHER			
4. ROOFING PRODUCTS			
A. ASPHALT SHINGLES	IKO	Cambridge asphalt shingles	FL7006, 15550, 30310
B. NON-STRUCT METAL	Tri-County Metals	Galvalume roofing	FL13332, 4595R-1
C. ROOFING TILES			
D. SINGLE PLY ROOF			
E. OTHER			
5. STRUCT COMPONENTS			
A. WOOD CONNECTORS	Simpson	Connectors & anchors	See sheet below
B. WOOD ANCHORS			
C. TRUSS PLATES			
D. INSULATION FORMS			
E. LINTELS			
F. OTHERS			
6. NEW EXTERIOR			
A. ENVELOPE PRODUCTS			

The products listed below did not demonstrate product approval at plan review. I understand that at the time of inspection of these products, the following information must be available to the inspector on the jobsite; **(1)** copy of the product approval **(2)** performance characteristics which the product was tested and certified to comply with **(3)** copy of the applicable manufacturer's installation requirements. Further, I understand these products may have to be removed if approval cannot be demonstrated during inspection.

APPLICANT SIGNATURE

06-01-2021

DATE

SIMPSON STRONG-TIE PRODUCT APPROVALS

ABU66	10849.5
DTT2Z	10441.13
H1	10456.5
H2.5A	10456.12
H10	10456.6
H10-2	10456.7
HDU5-SDS2.5	10441.6
HUC210-2	10531.28
HTT4	13872.3
LSTA12	10852.4
LSTA15	10852.4
LSTA18	10852.4
SP1	10456.41
SP2	10456.42
SP4	10456.43
SP6	10456.44
SPH4	10446.46
SPH6	10456.47

YKK AP RESIDENTIAL

StyleView Single Hung Window

INSTALLATION NOTES:

1. ONE (1) INSTALLATION ANCHOR IS REQUIRED AT EACH ANCHOR LOCATION SHOWN.
2. THE NUMBER OF INSTALLATION ANCHORS DEPICTED IS THE MINIMUM NUMBER OF ANCHORS TO BE USED FOR PRODUCT INSTALLATION.
3. INSTALL INDIVIDUAL INSTALLATION ANCHORS WITHIN A TOLERANCE OF ±1/2 INCH OF THE DEPICTED LOCATION IN THE ANCHOR LAYOUT DETAIL (I.E., WITHOUT CONSIDERATION OF TOLERANCES). TOLERANCES ARE NOT CUMULATIVE FROM ONE INSTALLATION ANCHOR TO THE NEXT.
4. FOR INSTALLATION INTO WOOD FRAMING USE *#10 WOOD SCREWS* OF SUFFICIENT LENGTH TO ACHIEVE 1 1/2 INCH MINIMUM EMBEDMENT INTO WOOD SUBSTRATE.
5. FOR INSTALLATION INTO METAL STUD USE #10 TEK SCREWS THROUGH THE FRAME OF SUFFICIENT LENGTH TO ACHIEVE A MINIMUM OF 3 THREADS PENETRATION BEYOND METAL FRAME SUBSTRATE.
6. FOR INSTALLATION THROUGH 1X BUCK TO CONCRETE/MASONRY, OR DIRECTLY INTO CONCRETE/MASONRY, USE *3/16 INCH DIAMETER ITW TAPCONS* OF SUFFICIENT LENGTH TO ACHIEVE 1 1/4 INCH MINIMUM EMBEDMENT.
7. MINIMUM EMBEDMENT AND EDGE DISTANCE EXCLUDE WALL FINISHES, INCLUDING BUT NOT LIMITED TO STUCCO, FOAM, BRICK VENEER, AND SIDING.
8. INSTALLATION ANCHORS AND ASSOCIATED HARDWARE MUST BE MADE OF CORROSION RESISTANT MATERIAL OR HAVE A CORROSION RESISTANT COATING.
10. FOR HOLLOW BLOCK AND GROUT FILLED BLOCK, DO NOT INSTALL INSTALLATION ANCHORS INTO MORTAR JOINTS. EDGE DISTANCE IS MEASURED FROM FREE EDGE OF BLOCK OR EDGE OF MORTAR JOINT INTO FACE SHELL OF BLOCK.
11. INSTALLATION ANCHORS SHALL BE INSTALLED IN ACCORDANCE WITH ANCHOR MANUFACTURER'S INSTALLATION INSTRUCTIONS, AND ANCHORS SHALL NOT BE USED IN SUBSTRATES WITH STRENGTHS LESS THAN THE MINIMUM STRENGTH SPECIFIED BY THE ANCHOR MANUFACTURER.
12. INSTALLATION ANCHOR CAPACITIES FOR PRODUCTS HEREIN ARE BASED ON SUBSTRATE MATERIALS WITH THE FOLLOWING PROPERTIES:
    A. WOOD - MINIMUM SPECIFIC GRAVITY OF 0.55.
    B. STEEL - MINIMUM YIELD STRENGTH OF 33 KSI. MINIMUM 18 GA. WALL THICKNESS.
    B. CONCRETE -MINIMUM COMPRESSIVE STRENGTH OF 3000 PSI.
    C. MASONRY - STRENGTH CONFORMANCE TO ASTM C-90, GRADE N, TYPE 1 (OR GREATER) WITH MINIMUM COMPRESSIVE STRENGTH OF 2000 PSI.

GENERAL NOTES:

1. THE PRODUCT SHOWN HEREIN IS DESIGNED AND MANUFACTURED TO COMPLY WITH THE CURRENT EDITION FLORIDA BUILDING CODE (FBC), EXCLUDING HVHZ AND HAS BEEN EVALUATED ACCORDING TO THE FOLLOWING:
    - AAMA/WDMA/CSA 101/I.S.2/A440-05
2. ADEQUACY OF THE EXISTING STRUCTURAL CONCRETE/MASONRY, 2X FRAMING AND METAL STUD FRAMING AS A MAIN WIND FORCE RESISTING SYSTEM CAPABLE OF WITHSTANDING AND TRANSFERRING APPLIED PRODUCT LOADS TO THE FOUNDATION IS THE RESPONSIBILITY OF THE ENGINEER OR ARCHITECT OF RECORD FOR THE PROJECT OF INSTALLATION.
3. 2X BUCKS (WHEN USED) SHALL BE DESIGNED AND ANCHORED TO PROPERLY TRANSFER ALL LOADS TO THE STRUCTURE. BUCK DESIGN AND INSTALLATION IS THE RESPONSIBILITY OF THE ENGINEER OR ARCHITECT OF RECORD FOR THE PROJECT OF INSTALLATION.

THE INSTALLATION DETAILS DESCRIBED HEREIN ARE GENERIC AND MAY NOT REFLECT ACTUAL CONDITIONS FOR A SPECIFIC SITE. IF SITE CONDITIONS CAUSE INSTALLATION TO DEVIATE FROM THE REQUIREMENTS DETAILED HEREIN, A LICENSED ENGINEER OR ARCHITECT SHALL PREPARE SITE SPECIFIC DOCUMENTS FOR USE WITH THIS DOCUMENT IN NON-HVHZ AREAS.

4. APPROVED IMPACT PROTECTIVE SYSTEM **IS REQUIRED** ON THIS PRODUCT IN AREAS REQUIRING IMPACT RESISTANCE.
5. WINDOW FRAME MATERIAL: PVC
6. DESIGNATIONS "X" AND "O" STAND FOR THE FOLLOWING:
    X: OPERABLE PANEL
    O: FIXED PANEL
7. GLAZING SHALL MEET ASTM E1300 REQUIREMENTS, SEE SHEET 3 FOR GLAZING DETAILS.

TABLE OF CONTENTS

SHEET	SHEET DESCRIPTION
1	INSTALLATION & GENERAL NOTES
2	ELEVATION & ANCHOR SCHEDULE
3	VERTICAL SECTION & GLAZING DETAILS
4	HORIZONTAL SECTION

UNIT DIMENSIONS

CONFIGURATION	DESIGN PRESSURE	MAXIMUM SIZE	MISSILE IMPACT RATING
O/X	+35 / -35 PSF	48.99" X 72"	NOT RATED
O/X	+35 / -35 PSF	52" X 62"	NOT RATED

Digitally signed by Hermes F Norero, P.E.
Reason: I am approving this document
Date: 2015.06.30 13:03:06 -04'00'

YKK AP AMERICA RESIDENTIAL
7680 The Bluffs, Suite 100
Austell, GA 30168
PH: (678) 838-6000 x6060

TITLE: STYLEVIEW SINGLE HUNG
INSTALLATION & GENERAL NOTES

PREPARED BY:
BUILDING DROPS, INC.
398 E. DANIA BEACH BLVD. #338
DANIA BEACH, FL 33004
PH: (954) 399-8478 FX: (954) 744-4738

REVISIONS

NO.	DESCRIPTION	BY	DATE

HERMES F. NORERO ★ LICENSE No. 73778 ★ STATE OF FLORIDA ★ PROFESSIONAL ENGINEER

HERMES F. NORERO, P.E.
FLORIDA P. E. NO. 73778
398 EAST DANIA BEACH BLVD. #338
DANIA BEACH, FL 33004
FBPE CERT. OF AUTHORIZATION NO. 28578

DATE: 06.09.15
DWN BY: LS
CHK BY: HFN
SCALE: NTS
DWG #: YKK142
SHEET: 1 OF 4

6/29/2015 6:50 PM
s:\projects\ykk ap america, inc\cc-14-0738 residential fpc version 5 code change\revisions\#15081\dwgs\ykk142 styleview sh.dwg

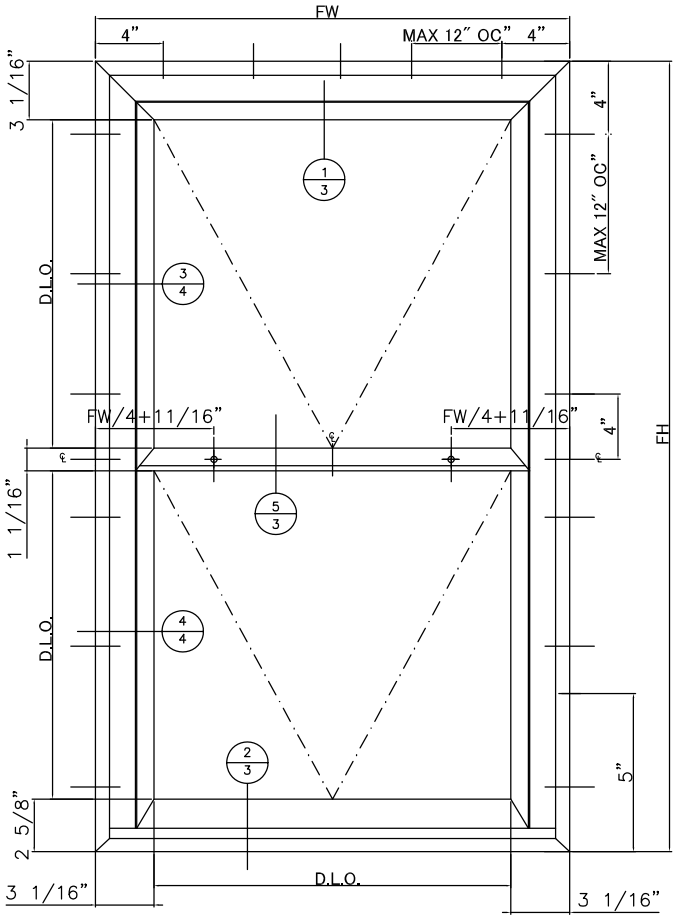

ELEVATION

ANCHOR SCHEDULE				
METHOD	SUBSTRATE	ANCHOR	MIN. EMBEDMENT	MIN. EDGE DISTANCE
Through Frame	MIN. S.G. = 0.55 WOOD	#10 WOOD SCREW	1.5"	0.75"
	18 GAUGE STEEL, MIN fy = 33 ksi	#10 TEK SCREW	3 THREADS PENETRATION BEYOND METAL	0.75"
	CONCRETE, MIN fc = 3000 psi	3/16" ITW TAPCON	1.25"	2.5"
	CMU per ASTM C90	3/16" ITW TAPCON	1.25"	2.5"

—INDICATES LOCK LOCATION
FW<36" ONE LOCK (CENTER)
FW>36" TWO LOCK (FW/4–11/16)

YKK AP AMERICA RESIDENTIAL
7680 The Bluffs, Suite 100
Austell, GA 30168
PH: (678) 838-6000 x6060

TITLE: STYLEVIEW SINGLE HUNG
ELEVATION & ANCHOR SCHEDULE

PREPARED BY:
BUILDING DROPS, INC.
398 E. DANIA BEACH BLVD. #338
DANIA BEACH, FL 33004
PH: (954) 399-8478 FX: (954) 744-4738

REVISIONS

NO.	DESCRIPTION	BY	DATE

HERMES F. NORERO ★ ENGINEER ★ LICENSE No. 73778 STATE OF FLORIDA ★ PROFESSIONAL ENGINEER
HERMES F. NORERO, P.E.
FLORIDA P. E. NO. 73778
398 E. DANIA BEACH BLVD. #338
DANIA BEACH, FL 33004
FBPE CERT. OF AUTHORIZATION NO. 29578

DATE: 06.09.15
DWN BY: LS
CHK BY: HFN
SCALE: NTS

DWG #: YKK142

SHEET: 2 OF 4

6/29/2015 6:50 PM

s:\projects\ykk ap america, inc\cc-14-0738 residential fbc version 5 code change\revisions\fl13081\dwgs\ykk142 styleview sh.dwg

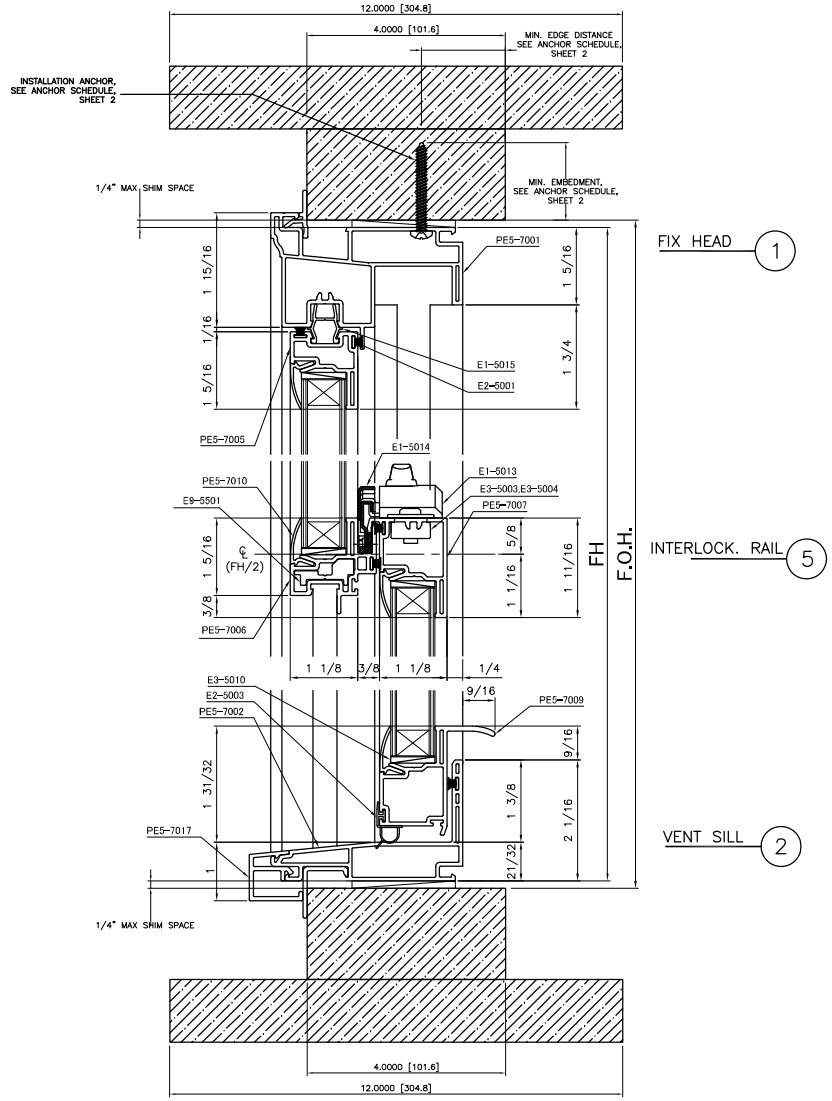

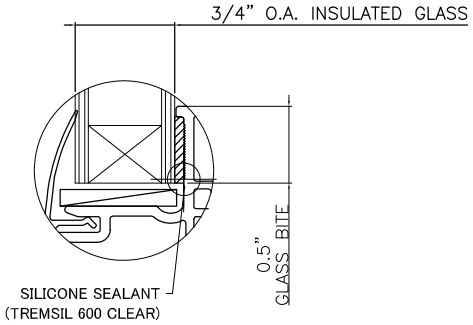

GLAZING DETAIL

NOTE:
GLASS THICKNESS AND TYPE SHALL COMPLY WITH ASTM E 1300 REQUIREMENT GLASS CHARTS.

YKK AP AMERICA RESIDENTIAL
7680 The Bluffs, Suite 100
Austell, GA 30168
PH: (678) 838-6000 x6060

TITLE: STYLEVIEW SINGLE HUNG VERTICAL SECTION & GLAZING DETAILS

PREPARED BY:
BUILDING DROPS, INC.
398 E. DANIA BEACH BLVD. #338
DANIA BEACH, FL 33004
PH: (954) 399-8478 FX: (954) 744-4738

REVISIONS

NO.	DESCRIPTION	BY	DATE

HERMES F. NORERO ★ LICENSE No. 73778 ★ STATE OF FLORIDA ★ PROFESSIONAL ENGINEER

HERMES F. NORERO, P.E.
FLORIDA P.E. NO. 73778
398 E. DANIA BEACH BLVD.
DANIA BEACH, FL 33004
FBPE CERT. OF AUTHORIZATION NO. 29578

DATE: 06.09.15
DWN BY: LS
CHK BY: HFN
SCALE: NTS

DWG #: YKK142

SHEET: 3 OF 4

6/29/2015 6:50 PM
s:\projects\ykk ap america, inc\cc-14-0738 residential fbc version 5 code change\revisions\#139081\dwgs\ykk142 styleview sh.dwg

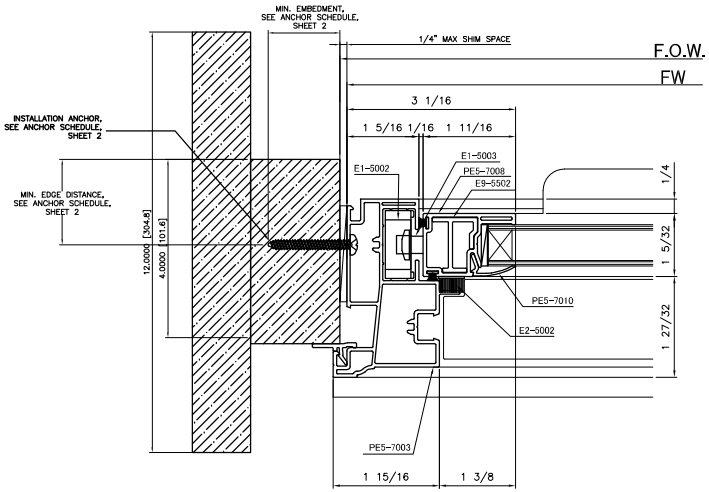

VENT JAMB 4

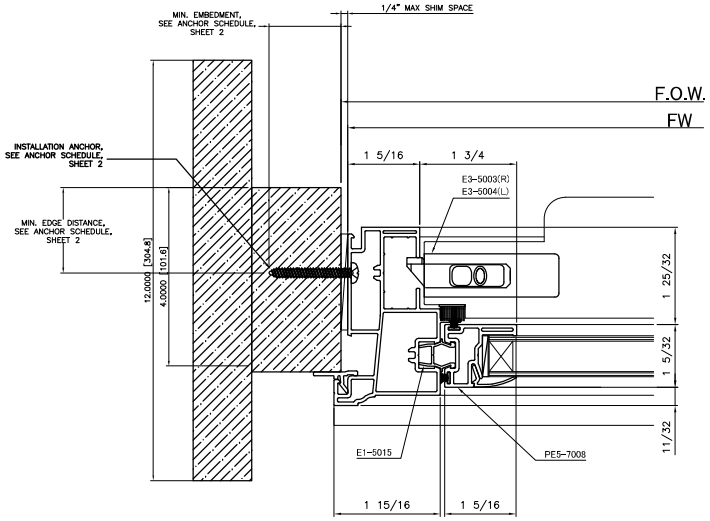

FIX JAMB 3

YKK AP AMERICA RESIDENTIAL
7680 The Bluffs, Suite 100
Austell, GA 30168
PH: (678) 838-6000 x6060

TITLE: STYLEVIEW SINGLE HUNG
HORIZONTAL SECTIONS

PREPARED BY:
BUILDING DROPS, INC.
398 E. DANIA BEACH BLVD. #338
DANIA BEACH, FL 33004
PH: (954) 399-8478 FX: (954) 744-4738

REVISIONS

NO.	DESCRIPTION	BY	DATE

HERMES F. NORERO ★ LICENSE No. 73778 ★ STATE OF FLORIDA ★ PROFESSIONAL ENGINEER

HERMES F. NORERO, P.E.
FLORIDA P.E. NO. 73778
398 E. DANIA BEACH BLVD. #338
DANIA BEACH, FL 33004
FBPE CERT. OF AUTHORIZATION NO. 29578

DATE: 06.09.15
DWN BY: LS
CHK BY: HFN
SCALE: NTS

DWG #: YKK142

SHEET: 4 OF 4

6/29/2015 6:50 PM

s:\projects\ykk ap america, inc\cc-14-0738 residential fbc version 5 code change\revisions\fl13081\dwgs\ykk142 styleview sh.dwg

YKK AP RESIDENTIAL

StyleView Twin Single Hung Window

INSTALLATION NOTES:

1. ONE (1) INSTALLATION ANCHOR IS REQUIRED AT EACH ANCHOR LOCATION SHOWN.
2. THE NUMBER OF INSTALLATION ANCHORS DEPICTED IS THE MINIMUM NUMBER OF ANCHORS TO BE USED FOR PRODUCT INSTALLATION.
3. INSTALL INDIVIDUAL INSTALLATION ANCHORS WITHIN A TOLERANCE OF ±1/2 INCH OF THE DEPICTED LOCATION IN THE ANCHOR LAYOUT DETAIL (I.E., WITHOUT CONSIDERATION OF TOLERANCES). TOLERANCES ARE NOT CUMULATIVE FROM ONE INSTALLATION ANCHOR TO THE NEXT.
4. FOR INSTALLATION INTO WOOD FRAMING USE *#8 WOOD SCREWS* OF SUFFICIENT LENGTH TO ACHIEVE 1 1/2 INCH MINIMUM EMBEDMENT INTO WOOD SUBSTRATE.
5. FOR INSTALLATION INTO METAL STUD USE #8 TEK SCREWS THROUGH THE FRAME OF SUFFICIENT LENGTH TO ACHIEVE A MINIMUM OF 3 THREADS PENETRATION BEYOND METAL FRAME SUBSTRATE.
6. MINIMUM EMBEDMENT AND EDGE DISTANCE EXCLUDE WALL FINISHES, INCLUDING BUT NOT LIMITED TO STUCCO, FOAM, BRICK VENEER, AND SIDING.
7. INSTALLATION ANCHORS AND ASSOCIATED HARDWARE MUST BE MADE OF CORROSION RESISTANT MATERIAL OR HAVE A CORROSION RESISTANT COATING.
8. INSTALLATION ANCHORS SHALL BE INSTALLED IN ACCORDANCE WITH ANCHOR MANUFACTURER'S INSTALLATION INSTRUCTIONS, AND ANCHORS SHALL NOT BE USED IN SUBSTRATES WITH STRENGTHS LESS THAN THE MINIMUM STRENGTH SPECIFIED BY THE ANCHOR MANUFACTURER.
9. INSTALLATION ANCHOR CAPACITIES FOR PRODUCTS HEREIN ARE BASED ON SUBSTRATE MATERIALS WITH THE FOLLOWING PROPERTIES:
   A. WOOD - MINIMUM SPECIFIC GRAVITY OF 0.55.
   B. STEEL - MINIMUM YIELD STRENGTH OF 33 KSI. MINIMUM 18 GA. WALL THICKNESS.

GENERAL NOTES:

1. THE PRODUCT SHOWN HEREIN IS DESIGNED AND MANUFACTURED TO COMPLY WITH THE CURRENT EDITION FLORIDA BUILDING CODE (FBC), EXCLUDING HVHZ AND HAS BEEN EVALUATED ACCORDING TO THE FOLLOWING:
   - AAMA/WDMA/CSA 101/I.S.2/A440-05
2. ADEQUACY OF THE EXISTING STRUCTURAL CONCRETE/MASONRY, 2X FRAMING AND METAL STUD FRAMING AS A MAIN WIND FORCE RESISTING SYSTEM CAPABLE OF WITHSTANDING AND TRANSFERRING APPLIED PRODUCT LOADS TO THE FOUNDATION IS THE RESPONSIBILITY OF THE ENGINEER OR ARCHITECT OF RECORD FOR THE PROJECT OF INSTALLATION.
3. 2X BUCKS (WHEN USED) SHALL BE DESIGNED AND ANCHORED TO PROPERLY TRANSFER ALL LOADS TO THE STRUCTURE. BUCK DESIGN AND INSTALLATION IS THE RESPONSIBILITY OF THE ENGINEER OR ARCHITECT OF RECORD FOR THE PROJECT OF INSTALLATION.

THE INSTALLATION DETAILS DESCRIBED HEREIN ARE GENERIC AND MAY NOT REFLECT ACTUAL CONDITIONS FOR A SPECIFIC SITE. IF SITE CONDITIONS CAUSE INSTALLATION TO DEVIATE FROM THE REQUIREMENTS DETAILED HEREIN, A LICENSED ENGINEER OR ARCHITECT SHALL PREPARE SITE SPECIFIC DOCUMENTS FOR USE WITH THIS DOCUMENT IN NON-HVHZ AREAS.

4. APPROVED IMPACT PROTECTIVE SYSTEM **IS REQUIRED** ON THIS PRODUCT IN AREAS REQUIRING IMPACT RESISTANCE.
5. WINDOW FRAME MATERIAL: PVC
6. DESIGNATIONS "X" AND "O" STAND FOR THE FOLLOWING:
   X: OPERABLE PANEL
   O: FIXED PANEL
7. GLAZING SHALL MEET ASTM E1300 REQUIREMENTS, SEE SHEET 3 FOR GLAZING DETAILS.

TABLE OF CONTENTS

SHEET	SHEET DESCRIPTION
1	INSTALLATION & GENERAL NOTES
2	ELEVATION & ANCHOR SCHEDULE
3	VERTICAL SECTION & GLAZING DETAILS
4	HORIZONTAL SECTION

UNIT DIMENSIONS

CONFIGURATION	DESIGN PRESSURE	MAXIMUM SIZE	MISSILE IMPACT RATING
O/X-O/X	+50 / -50 PSF	71 1/2" X 71 1/2"	NOT RATED

YKK AP AMERICA RESIDENTIAL
7680 The Bluffs, Suite 100
Austell, GA 30168
PH: (678) 838-6000 x6060

TITLE: STYLEVIEW TWIN SINGLE HUNG WINDOW
INSTALLATION & GENERAL NOTES

PREPARED BY:
BUILDING DROPS, INC.
398 E. DANIA BEACH BLVD. #338
DANIA BEACH, FL 33004
PH: (954) 399-8478 FX: (954) 744-4738

REVISIONS

NO.	DESCRIPTION	BY	DATE

HERMES F. NORERO LICENSE No. 73778 STATE OF FLORIDA PROFESSIONAL ENGINEER

HERMES F. NORERO, P.E.
FLORIDA P.E. LIC. 73778
398 EAST DANIA BEACH BLVD.
DANIA BEACH, FLORIDA 33004
FBPE CERT. OF AUTHORIZATION No. 29578

DATE: 06.11.15
DWN BY: LS
CHK BY: HFN
SCALE: NTS
DWG #: YKK140
SHEET: 1 OF 4

7/17/2015 9:27 AM
s:\projects\ykk ap america, inc\cc-14-0738 residential fpc version 5 code change\revisions\#88886\dwgs\ykk140 styleview sh.dwg

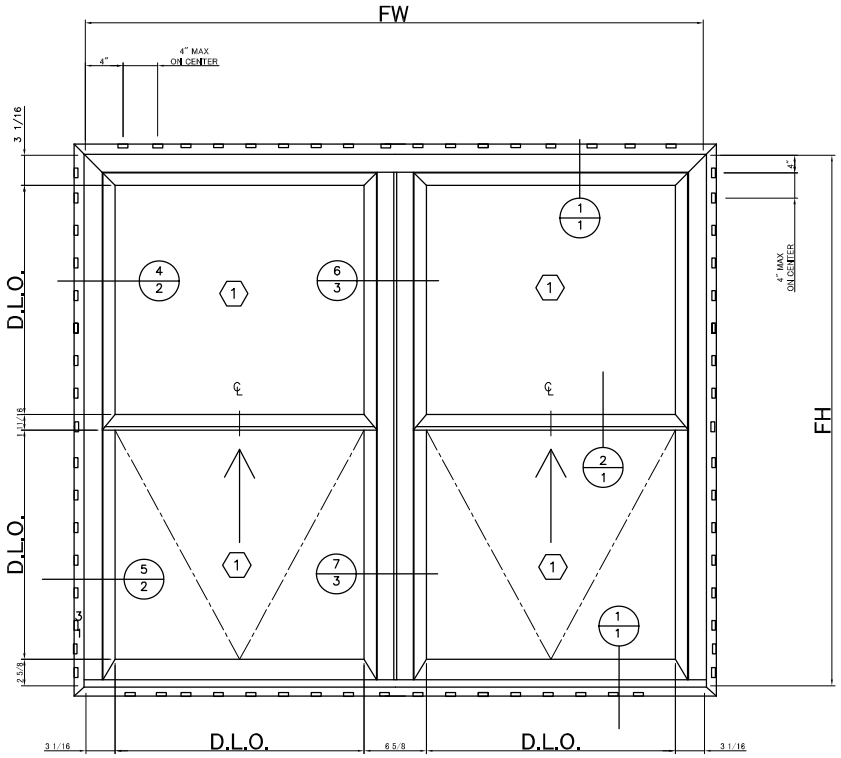

ELEVATION

ANCHOR SCHEDULE				
METHOD	SUBSTRATE	ANCHOR	MIN. EMBEDMENT	MIN. EDGE DISTANCE
NAIL FIN	MIN. S.G. = 0.55 WOOD	#8 WOOD SCREW	1.5"	0.75"
	18 GAUGE STEEL, MIN fy = 33 ksi	#8 SELF TAPPING SCREW	3 THREADS PENETRATION BEYOND METAL	0.75"

YKK AP AMERICA RESIDENTIAL
7680 The Bluffs, Suite 100
Austell, GA 30168
PH: (678) 838-6000 x6060

TITLE: STYLEVIEW
TWIN SINGLE HUNG WINDOW
ELEVATION & ANCHOR SCHEDULE

PREPARED BY:
BUILDING DROPS, INC.
398 E. DANIA BEACH BLVD. #338
DANIA BEACH, FL 33004
PH: (954) 399-8478 FX: (954) 744-4738

REVISIONS

NO.	DESCRIPTION	BY	DATE

HERMES F. NORERO ★ LICENSE No. 73778 ★ STATE OF FLORIDA ★ PROFESSIONAL ENGINEER
HERMES (F) NORERO, P.E.
FLORIDA P.E. NO. 73778
398 E. DANIA BEACH BLVD. #338
DANIA BEACH, FL 33004
FBPE CERT. OF AUTHORIZATION No. 29578

DATE: 06.11.15
DWN BY: LS
CHK BY: HFN
SCALE: NTS

DWG #: YKK140

SHEET: 2 OF 4

s:\projects\ykk ap america, inc\cc-14-0738 residential Pbc version 5 code change\revisions\#88886\dwgs\ykk140 styleview sh.dwg
7/17/2015 9:27 AM

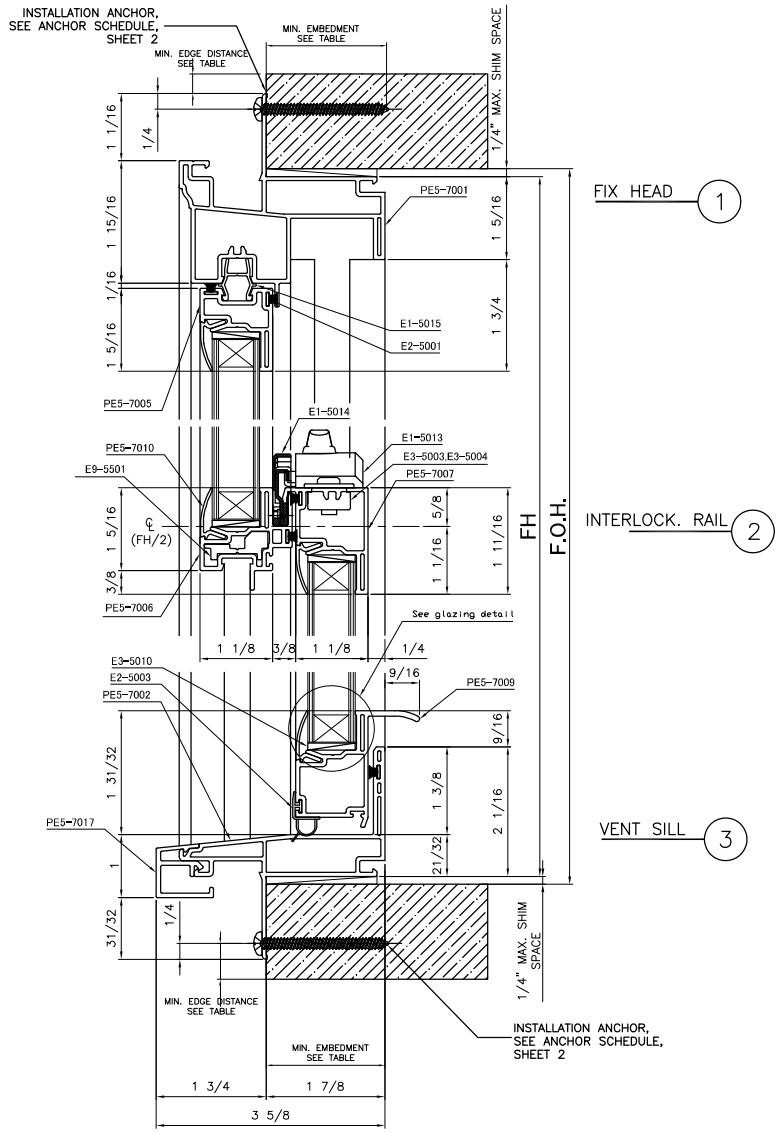

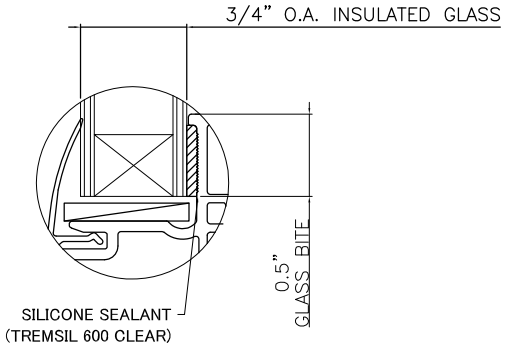

GLAZING DETAIL

NOTE:
GLASS THICKNESS AND TYPE SHALL COMPLY WITH ASTM E 1300 REQUIREMENT GLASS CHARTS.

YKK AP AMERICA RESIDENTIAL
7680 The Bluffs, Suite 100
Austell, GA 30168
PH: (678) 838-6000 x6060

TITLE: STYLEVIEW TWIN SINGLE HUNG WINDOW VERTICAL SECTION & GLAZING DETAILS

PREPARED BY:
BUILDING DROPS, INC.
398 E. DANIA BEACH BLVD. #338
DANIA BEACH, FL 33004
PH: (954) 399-8478 FX: (954) 744-4738

REVISIONS

NO.	DESCRIPTION	BY	DATE

HERMES F. NORERO ★ LICENSE No. 73778 ★ STATE OF FLORIDA ★ PROFESSIONAL ENGINEER
HERMES (F) NORERO, P.E.
FLORIDA P.E. NO. 73778
398 E. DANIA BEACH BLVD. #338
DANIA BEACH, FL 33004
FBPE CERT. OF AUTHORIZATION No. 29578

DATE: 06.11.15
DWN BY: LS
CHK BY: HFN
SCALE: NTS

DWG #: YKK140

SHEET: 3 OF 4

s:\projects\ykk ap america, inc\cc-14-0738 residential Pkc version 5 code change\revisions\f88886\dwgs\ykk140 styleview sh.dwg
7/17/2015 9:27 AM

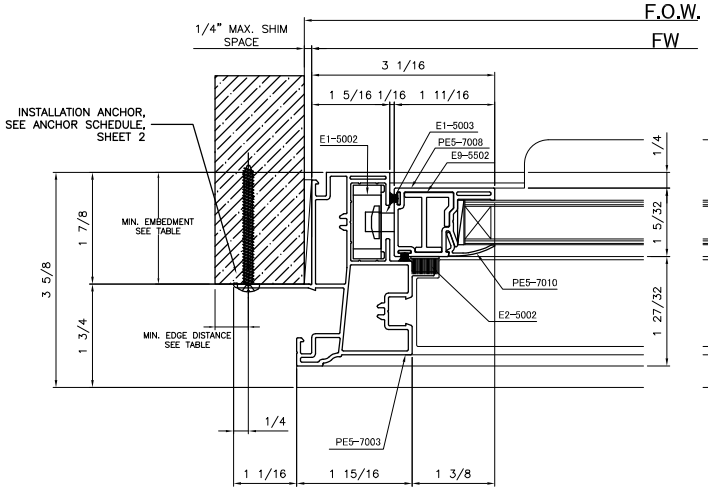

VENT JAMB 5

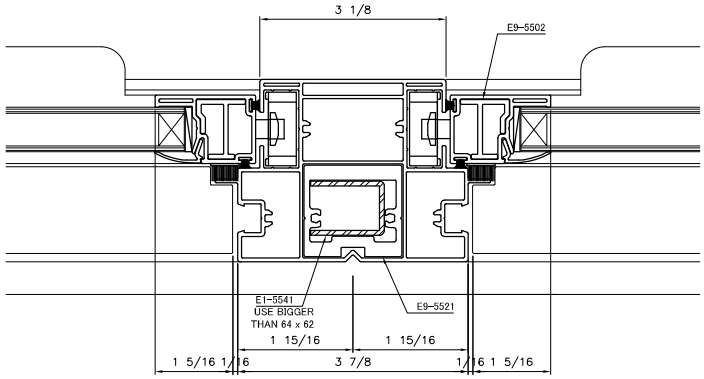

VENTMULLION 7

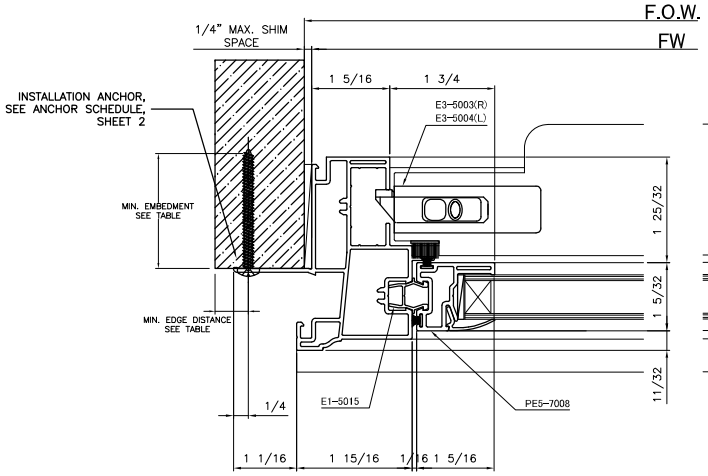

FIX JAMB 4

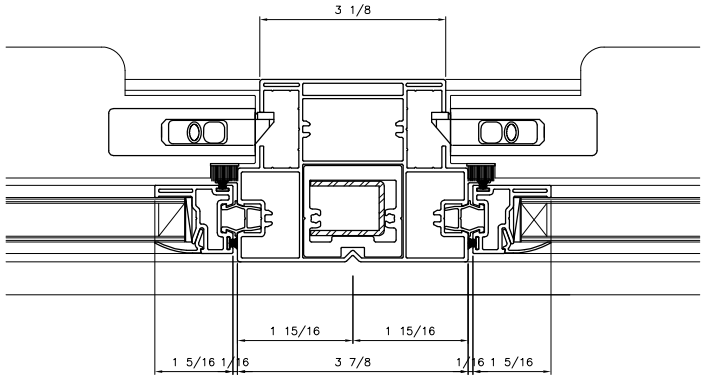

FIX MULLION 6

YKK ap Quality inspires

YKK AP AMERICA RESIDENTIAL
7680 The Bluffs, Suite 100
Austell, GA 30168
PH: (678) 838-6000 x6060

TITLE: STYLEVIEW
TWIN SINGLE HUNG WINDOW
HORIZONTAL SECTIONS

PREPARED BY:
BUILDING DROPS, INC.
398 E. DANIA BEACH BLVD. #338
DANIA BEACH, FL 33004
PH: (954) 399-8478 FX: (954) 744-4738

REVISIONS

NO.	DESCRIPTION	BY	DATE

HERMES F. NORERO
LICENSE No. 73778
STATE OF FLORIDA
PROFESSIONAL ENGINEER
HERMES F. NORERO, P.E.
FLORIDA P.E. NO. 73778
398 E. DANIA BEACH BLVD. #338
DANIA BEACH, FL 33004
FBPE CERT. OF AUTHORIZATION No. 29578

DATE: 06.11.15
DWN BY: LS
CHK BY: HFN
SCALE: NTS

DWG #: YKK140

SHEET: 4 OF 4

7/17/2015 9:27 AM

s:\projects\ykk ap america, inc\cc-14-0738 residential fbc version 5 code change\revisions\f88886\dwgs\ykk140 styleview sh.dwg

YKK AP RESIDENTIAL

StyleGuard Fixed Picture Window

INSTALLATION NOTES:

1. ONE (1) INSTALLATION ANCHOR IS REQUIRED AT EACH ANCHOR LOCATION SHOWN.
2. THE NUMBER OF INSTALLATION ANCHORS DEPICTED IS THE MINIMUM NUMBER OF ANCHORS TO BE USED FOR PRODUCT INSTALLATION.
3. INSTALL INDIVIDUAL INSTALLATION ANCHORS WITHIN A TOLERANCE OF ±1/2 INCH OF THE DEPICTED LOCATION IN THE ANCHOR LAYOUT DETAIL (I.E., WITHOUT CONSIDERATION OF TOLERANCES). TOLERANCES ARE NOT CUMULATIVE FROM ONE INSTALLATION ANCHOR TO THE NEXT.
4. FOR INSTALLATION INTO WOOD FRAMING USE *#10 WOOD SCREWS* OF SUFFICIENT LENGTH TO ACHIEVE 3/4 INCH MINIMUM EMBEDMENT INTO WOOD SUBSTRATE.
5. FOR INSTALLATION INTO METAL STUD USE #10 PAN HEAD SCREWS THROUGH THE FRAME OF SUFFICIENT LENGTH TO ACHIEVE A MINIMUM OF 3 THREADS PENETRATION BEYOND METAL FRAME SUBSTRATE.
6. FOR INSTALLATION THROUGH 1X BUCK TO CONCRETE/MASONRY, OR DIRECTLY INTO CONCRETE/MASONRY, USE *3/16 INCH DIAMETER ITW TAPCON* OF SUFFICIENT LENGTH TO ACHIEVE *1 1/4 INCH* MINIMUM EMBEDMENT.
7. MINIMUM EMBEDMENT AND EDGE DISTANCE EXCLUDE WALL FINISHES, INCLUDING BUT NOT LIMITED TO STUCCO, FOAM, BRICK VENEER, AND SIDING.
8. INSTALLATION ANCHORS AND ASSOCIATED HARDWARE MUST BE MADE OF CORROSION RESISTANT MATERIAL OR HAVE A CORROSION RESISTANT COATING.
9. INSTALLATION ANCHORS SHALL BE INSTALLED IN ACCORDANCE WITH ANCHOR MANUFACTURER'S INSTALLATION INSTRUCTIONS, AND ANCHORS SHALL NOT BE USED IN SUBSTRATES WITH STRENGTHS LESS THAN THE MINIMUM STRENGTH SPECIFIED BY THE ANCHOR MANUFACTURER.
10. INSTALLATION ANCHOR CAPACITIES FOR PRODUCTS HEREIN ARE BASED ON SUBSTRATE MATERIALS WITH THE FOLLOWING PROPERTIES:
    A. WOOD - MINIMUM SPECIFIC GRAVITY OF 0.55.
    B. CONCRETE -MINIMUM COMPRESSIVE STRENGTH OF 3000 PSI.
    C. MASONRY - STRENGTH CONFORMANCE TO ASTM C-90, GRADE N, TYPE 1 (OR GREATER).
    D. STEEL - MINIMUM YIELD STRENGTH OF 33 KSI. MINIMUM 18 GA. WALL THICKNESS.

GENERAL NOTES:

1. THE PRODUCT SHOWN HEREIN IS DESIGNED AND MANUFACTURED TO COMPLY WITH THE CURRENT EDITION FLORIDA BUILDING CODE (FBC), INCLUDING HVHZ AND HAS BEEN EVALUATED ACCORDING TO THE FOLLOWING:
    - TAS 201-94
    - TAS 202-94
    - TAS 203-94
2. ADEQUACY OF THE EXISTING STRUCTURAL CONCRETE/MASONRY, 2X FRAMING AND METAL STUD FRAMING AS A MAIN WIND FORCE RESISTING SYSTEM CAPABLE OF WITHSTANDING AND TRANSFERRING APPLIED PRODUCT LOADS TO THE FOUNDATION IS THE RESPONSIBILITY OF THE ENGINEER OR ARCHITECT OF RECORD FOR THE PROJECT OF INSTALLATION.
3. 2X BUCKS (WHEN USED) SHALL BE DESIGNED AND ANCHORED TO PROPERLY TRANSFER ALL LOADS TO THE STRUCTURE. BUCK DESIGN AND INSTALLATION IS THE RESPONSIBILITY OF THE ENGINEER OR ARCHITECT OF RECORD FOR THE PROJECT OF INSTALLATION.
4. THE INSTALLATION DETAILS DESCRIBED HEREIN ARE GENERIC AND MAY NOT REFLECT ACTUAL CONDITIONS FOR A SPECIFIC SITE. IF SITE CONDITIONS CAUSE INSTALLATION TO DEVIATE FROM THE REQUIREMENTS DETAILED HEREIN, A LICENSED ENGINEER OR ARCHITECT SHALL PREPARE SITE SPECIFIC DOCUMENTS FOR USE WITH THIS DOCUMENT IN NON-HVHZ AREAS. IN HVHZ AREAS, ONE TIME PRODUCT APPROVAL TO BE OBTAINED FROM MIAMI-DADE RER.
5. APPROVED IMPACT PROTECTIVE SYSTEM **IS NOT REQUIRED** ON THIS PRODUCT IN AREAS REQUIRING IMPACT RESISTANCE.
6. WINDOW FRAME MATERIAL: PVC
7. DESIGNATIONS "X" AND "O" STAND FOR THE FOLLOWING:
    X: OPERABLE PANEL
    O: FIXED PANEL
8. GLAZING MEETS ASTM E1300 REQUIREMENTS, SEE SHEET 3 FOR GLAZING DETAILS.

TABLE OF CONTENTS

SHEET	SHEET DESCRIPTION
1	INSTALLATION & GENERAL NOTES
2	NAIL FIN ANCHOR LAYOUT & ANCHOR SCHEDULE
3	NAIL FIN VERTICAL SECTION & GLAZING DETAIL
4	NAIL FIN FIXED JAMB & MULLION DETAIL
5	TROUGH FRAME ANCHOR LAYOUT
6	THROUGH FRAME VERTICAL SECTION
7	THROUGH FRAME FIXED JAMB & MULLION DETAIL

CONFIGURATION	DESIGN PRESSURE	MAXIMUM SIZE	MISSILE IMPACT RATING
OO	+50 / -50 PSF	101" x 78"	LARGE MISSILE IMPACT RATED

Digitally signed by Hermes F. Norero, P.E.
Reason: I am approving this document
Date: 2015.06.24 19:22:58 -04'00'

YKK AP AMERICA RESIDENTIAL
7680 The Bluffs, Suite 100
Austell, GA 30168
PH: (678) 838-6000 x6060

TITLE: STYLEGUARD FIXED PICTURE WINDOW
INSTALLATION & GENERAL NOTES

PREPARED BY:
BUILDING DROPS, INC.
398 E. DANIA BEACH BLVD. #338
DANIA BEACH, FL 33004
PH: (954) 399-8478 FX: (954) 744-4738

REVISIONS

NO.	DESCRIPTION	BY	DATE

HERMES F. NORERO LICENSE No. 73778 STATE OF FLORIDA PROFESSIONAL ENGINEER

HERMES F. NORERO, P.E.
FLORIDA P.E. LICENSE NO. 73778
398 EAST DANIA BEACH BLVD.
DANIA BEACH, FLORIDA 33004
FBPE CERT. OF AUTHORIZATION No. 28578

DATE: 06.04.15
DWN BY: BB
CHK BY: HFN
SCALE: NTS
DWG #: YKK124
SHEET: 1 OF 7

6/16/2015 4:05 PM
s:\projects\ykk ap america, inc\cc-14-0738 residential fpc version 5 code change\revisions\97829\dwg\ykk124 fixed picture.dwg

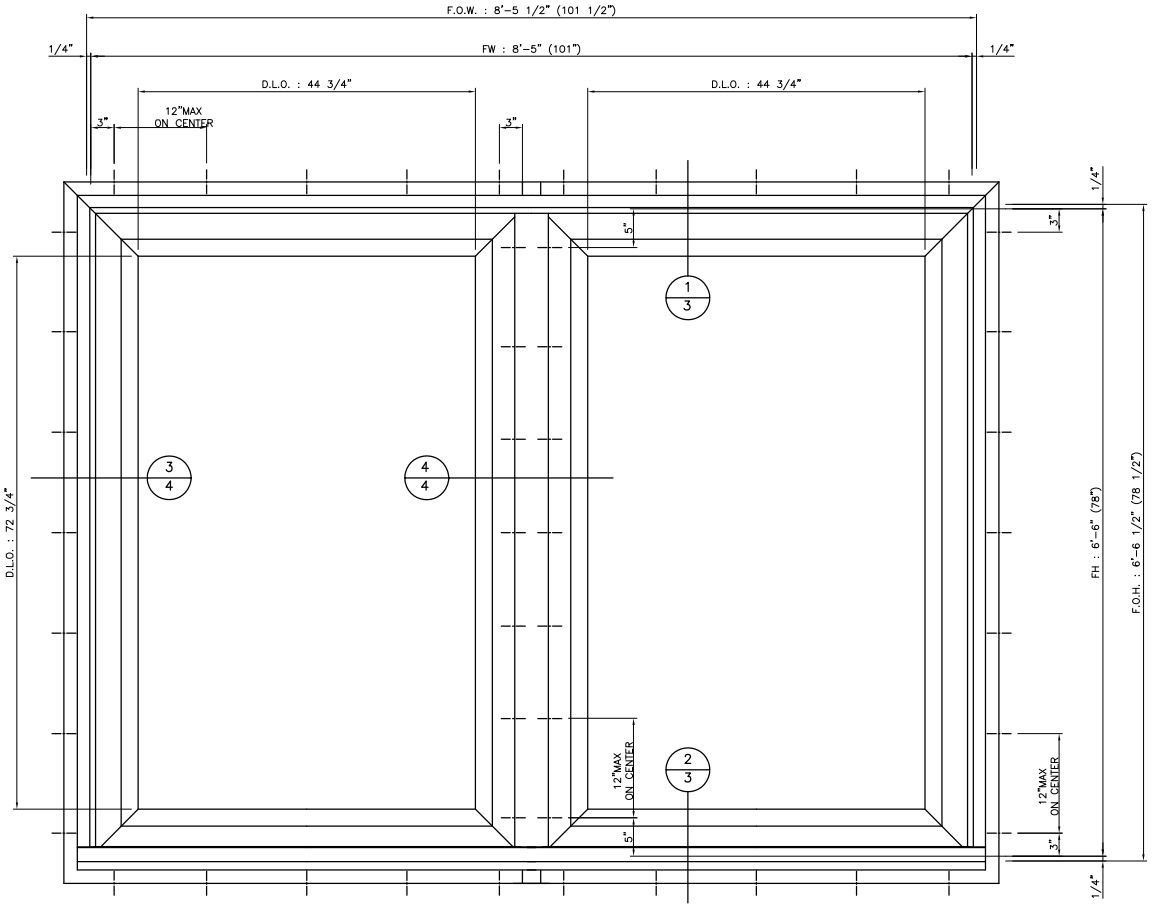

ELEVATION

ANCHOR SCHEDULE				
METHOD	SUBSTRATE	ANCHOR	MIN. EMBEDMENT	MIN. EDGE DISTANCE
NAIL FIN	MIN. S.G. = 0.55 WOOD	#10 WOOD SCREW	1.5"	0.75"
	18 GAUGE STEEL, MIN fy = 33 ksi	#10 PAN HEAD SCREW	3 THREADS PENETRATION BEYOND METAL	0.75"

YKK AP AMERICA RESIDENTIAL
7680 The Bluffs, Suite 100
Austell, GA 30168
PH: (678) 838-6000 x6060

TITLE: STYLEGUARD FIXED PICTURE WINDOW NAIL FIN ELEVATION & ANCHOR SCHEDULE

PREPARED BY:
BUILDING DROPS, INC.
398 E. DANIA BEACH BLVD. #338
DANIA BEACH, FL 33004
PH: (954) 399-8478 FX: (954) 744-4738

REVISIONS

NO.	DESCRIPTION	BY	DATE

HERMES F. NORERO ★ LICENSE No. 73778 ★ STATE OF FLORIDA ★ PROFESSIONAL ENGINEER

HERMES F. NORERO, P.E.
FLORIDA P.E. NO. 73778
398 E. DANIA BEACH BLVD. #338
DANIA BEACH, FL 33004
FBPE CERT. OF AUTHORIZATION NO. 29578

DATE: 06.04.15
DWN BY: BB
CHK BY: HFN
SCALE: NTS

DWG #: YKK124

SHEET: 2 OF 7

6/16/2015 4:05 PM

s:\projects\ykk ap america, inc\cc-14-0738 residential Pbc version 5 code change\revisions\17829\dwg\ykk124 fixed picture.dwg

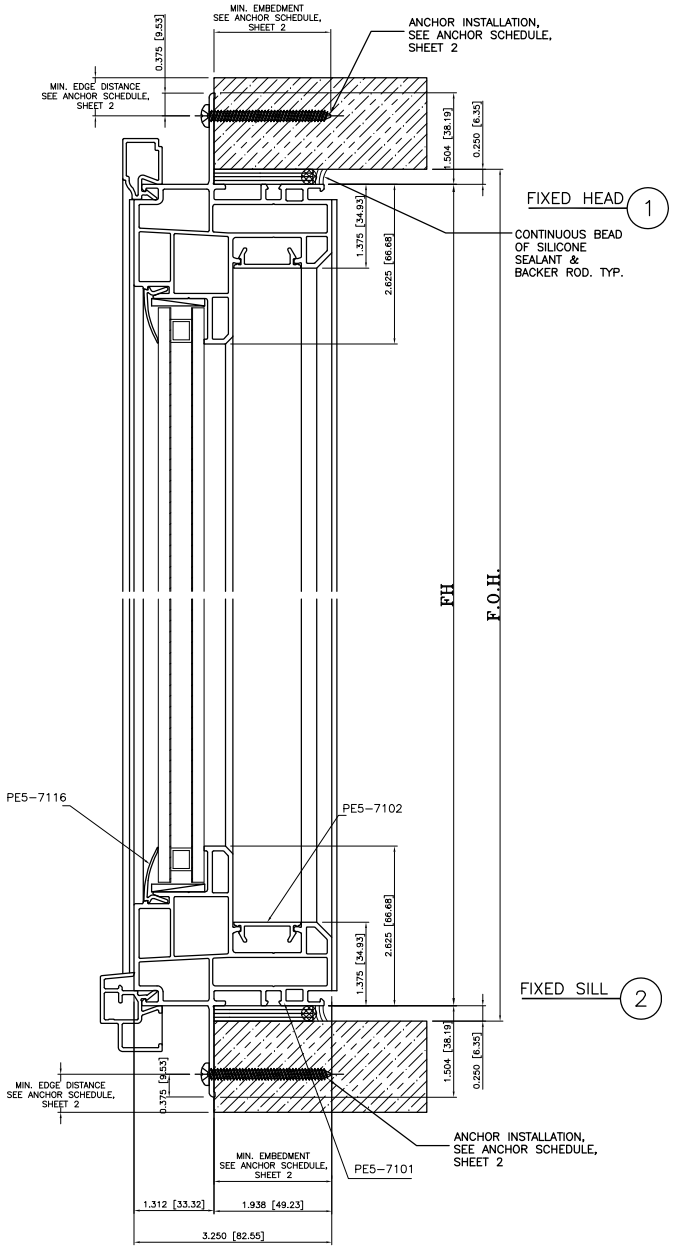

GLASS CONSISTING OF:
0.125"ANNEALED GLASS,
0.3125" AIR SPACE,
0.1875" HEAT STRENGTHENED GLASS,
0.090" SAFLEX PVB INTERLAYER
BY EASTMAN CHEMICAL CO.,
0.125" ANNEALED GLASS

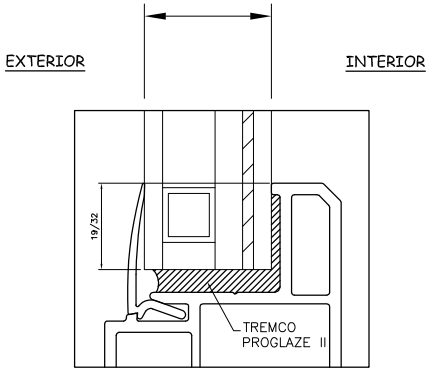

GLAZING DETAIL (1/1)

YKK AP AMERICA RESIDENTIAL
7680 The Bluffs, Suite 100
Austell, GA 30168
PH: (678) 838-6000 x6060

TITLE: STYLEGUARD FIXED PICTURE WINDOW NAIL FIN VERTICAL SECTION & GLAZING DETAIL

PREPARED BY:
BUILDING DROPS, INC.
398 E. DANIA BEACH BLVD. #338
DANIA BEACH, FL 33004
PH: (954) 399-8478 FX: (954) 744-4738

REVISIONS

NO.	DESCRIPTION	BY	DATE

HERMES F. NORERO ★ STATE OF FLORIDA ★ PROFESSIONAL ENGINEER ★ LICENSE No. 73778

HERMES F. NORERO, P.E.
FLORIDA P.E. NO. 73778
398 E. DANIA BEACH BLVD. #338
DANIA BEACH, FL 33004
FBPE CERT. OF AUTHORIZATION No. 29578

DATE: 06.04.15
DWN BY: BB
CHK BY: HFN
SCALE: NTS

DWG #: YKK124

SHEET: 3 OF 7

6/16/2015 4:05 PM

s:\projects\ykk ap america, inc\cc-14-0738 residential fpc version 5 code change\revisions\17829\dwg\ykk124 fixed picture.dwg

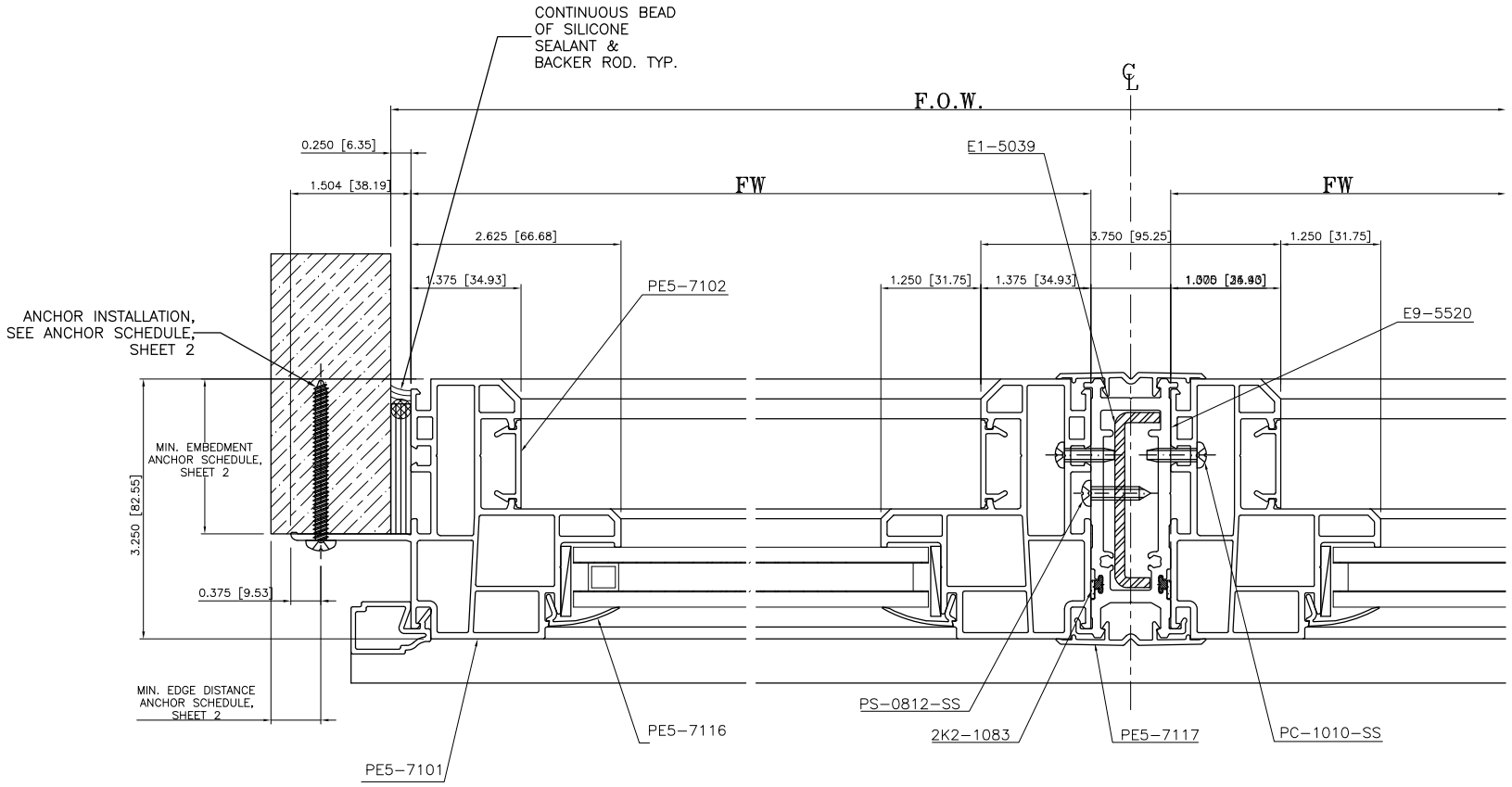

FIXED JAMB 3

MULLION 4

YKK AP AMERICA RESIDENTIAL
7680 The Bluffs, Suite 100
Austell, GA 30168
PH: (678) 838-6000 x6060

TITLE: STYLEGUARD FIXED PICTURE WINDOW THROUGH FRAME FIXED JAMB & MULLION DETAIL

PREPARED BY:
BUILDING DROPS, INC.
398 E. DANIA BEACH BLVD. #338
DANIA BEACH, FL 33004
PH: (954) 399-8478 FX: (954) 744-4738

REVISIONS

NO.	DESCRIPTION	BY	DATE

HERMES F. NORERO ★ LICENSE No. 73778 ★ STATE OF FLORIDA ★ PROFESSIONAL ENGINEER
HERMES F. NORERO, P.E.
FLORIDA P.E. NO. 73778
398 E. DANIA BEACH BLVD. #338
DANIA BEACH, FL 33004
FBPE CERT. OF AUTHORIZATION No. 29578

DATE: 06.04.15
DWN BY: BB
CHK BY: HFN
SCALE: NTS

DWG #: YKK124

SHEET: 4 OF 7

6/16/2015 4:05 PM

s:\projects\ykk ap america, inc\cc-14-0738 residential fpc version 5 code change\revisions\17829\dwg\ykk124 fixed picture.dwg

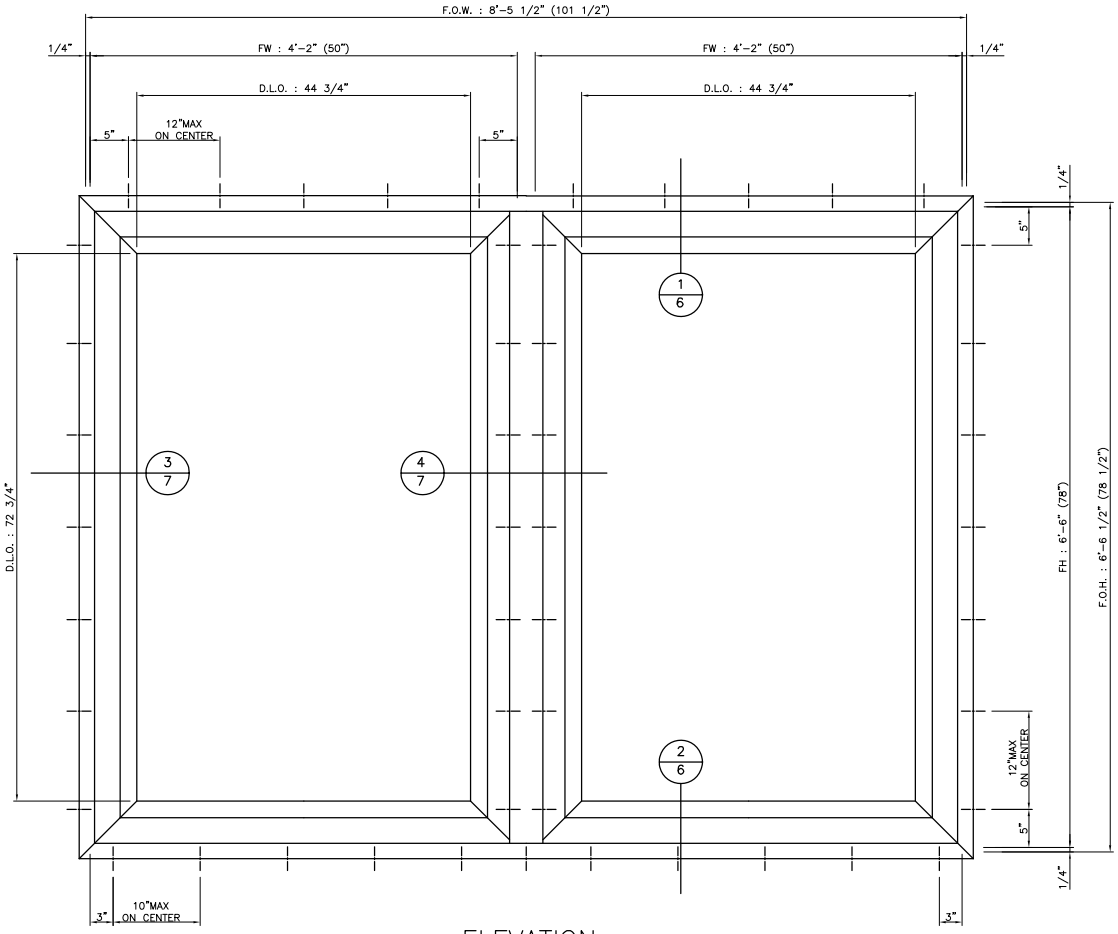

ELEVATION

ANCHOR SCHEDULE				
METHOD	SUBSTRATE	ANCHOR	MIN. EMBEDMENT	MIN. EDGE DISTANCE
THROUGH FRAME	MIN. S.G. = 0.55 WOOD	#10 WOOD SCREW	1.5"	0.75"
	CMU per astm C90	3/16" DIAMETER ITW TAPCON	1.25"	2.5"
	CONCRETE, MIN. COMPRESSIVE STRENGTH OF 3000 PSI	3/16" DIAMETER ITW TAPCON	1.25"	2.5"
	18 GAUGE STEEL, MIN fy = 33 ksi	#10 PAN HEAD SCREW	3 THREADS PENETRATION BEYOND METAL	0.75"

YKK AP AMERICA RESIDENTIAL
7680 The Bluffs, Suite 100
Austell, GA 30168
PH: (678) 838-6000 x6060

TITLE: STYLEGUARD FIXED PICTURE WINDOW THROUGH FRAME ELEVATION & ANCHOR SCHEDULE

PREPARED BY:
BUILDING DROPS, INC.
398 E. DANIA BEACH BLVD. #338
DANIA BEACH, FL 33004
PH: (954) 399-8478 FX: (954) 744-4738

REVISIONS

NO.	DESCRIPTION	BY	DATE

HERMES F. NORERO ★ LICENSE No. 73778 ★ STATE OF FLORIDA ★ PROFESSIONAL ENGINEER

HERMES F. NORERO, P.E.
FLORIDA P.E. NO. 73778
398 E. DANIA BEACH BLVD. #338
DANIA BEACH, FL 33004
FBPE CERT. OF AUTHORIZATION No. 29578

DATE: 06.04.15
DWN BY: BB
CHK BY: HFN
SCALE: NTS

DWG #: YKK124

SHEET: 5 OF 7

6/16/2015 4:05 PM

s:\projects\ykk ap america, inc\cc-14-0738 residential Pvc version 5 code change\revisions\17829\dwg\ykk124 fixed picture.dwg

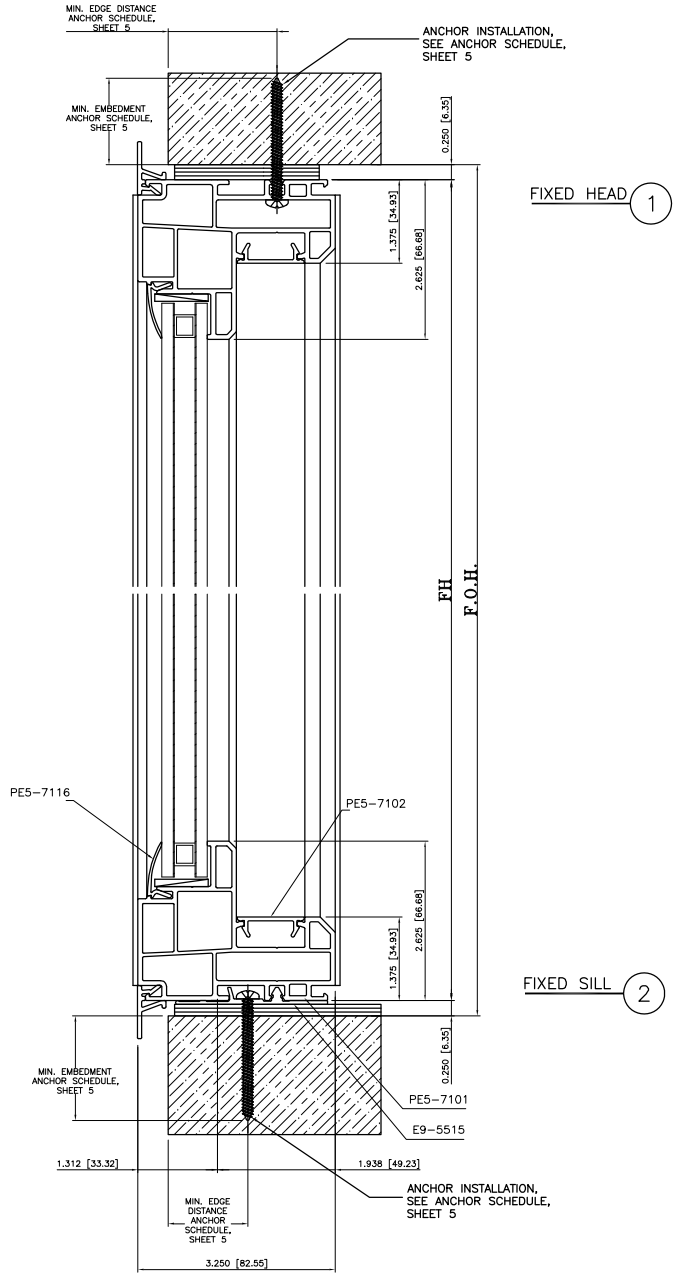

YKK ap Quality inspires

YKK AP AMERICA RESIDENTIAL
7680 The Bluffs, Suite 100
Austell, GA 30168
PH: (678) 838-6000 x6060

TITLE: STYLEGUARD FIXED PICTURE WINDOW THROUGH FRAME VERTICAL SECTION & GLAZING DETAIL

PREPARED BY:
BUILDING DROPS, INC.
398 E. DANIA BEACH BLVD. #338
DANIA BEACH, FL 33004
PH: (954) 399-8478 FX: (954) 744-4738

REVISIONS

NO.	DESCRIPTION	BY	DATE

HERMES F. NORERO ★ LICENSE No. 73778 ★ STATE OF FLORIDA ★ PROFESSIONAL ENGINEER
HERMES (F) NORERO, P.E.
FLORIDA P.E. NO. 73778
398 E. DANIA BEACH BLVD. #338
DANIA BEACH, FL 33004
FBPE CERT. OF AUTHORIZATION NO. 29578

DATE: 06.04.15
DWN BY: BB
CHK BY: HFN
SCALE: NTS

DWG #: YKK124

SHEET: 6 OF 7

6/16/2015 4:05 PM

s:\projects\ykk ap america, inc\cc-14-0738 residential fpc version 5 code change\revisions\17829\dwg\ykk124 fixed picture.dwg

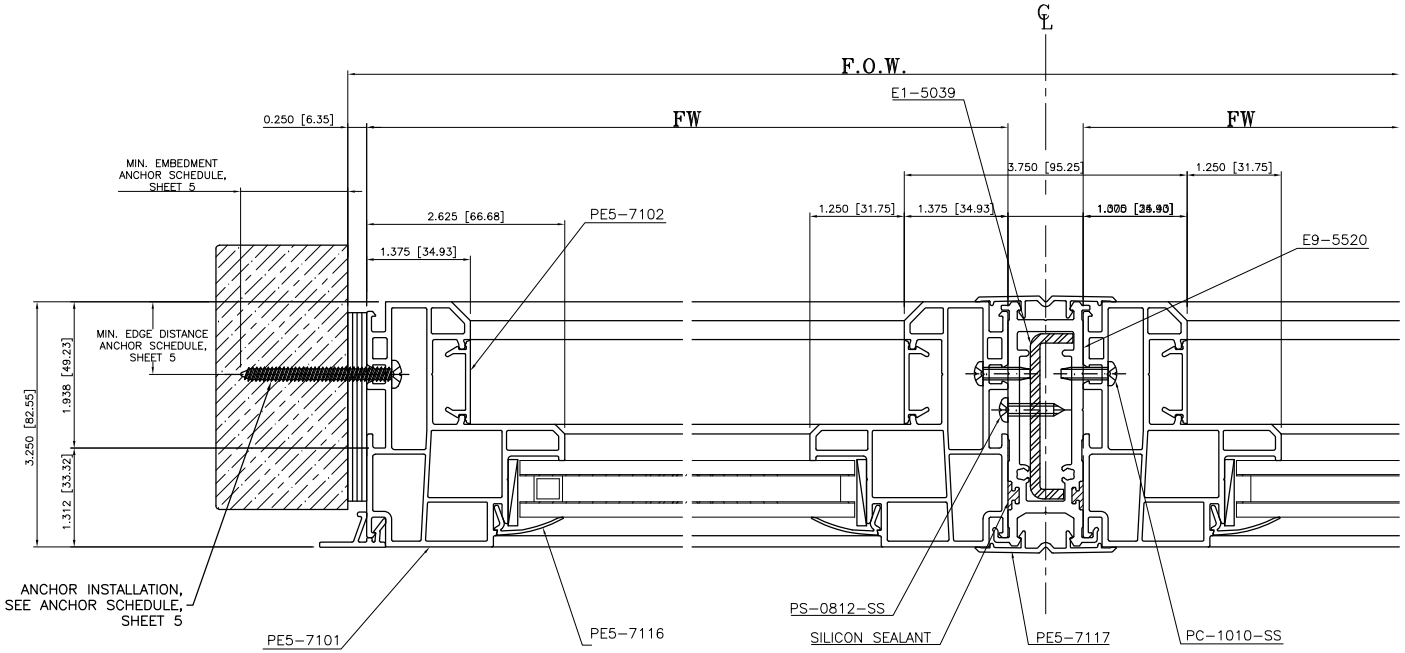

FIXED JAMB 3

MULLION 4

YKK ap Quality inspires

YKK AP AMERICA RESIDENTIAL
7680 The Bluffs, Suite 100
Austell, GA 30168
PH: (678) 838-6000 x6060

TITLE: STYLEGUARD FIXED PICTURE WINDOW NAIL FIN FIXED JAMB & MULLION DETAIL

PREPARED BY:
BUILDING DROPS, INC.
398 E. DANIA BEACH BLVD. #338
DANIA BEACH, FL 33004
PH: (954) 399-8478 FX: (954) 744-4738

REVISIONS

NO.	DESCRIPTION	BY	DATE

HERMES F. NORERO ★ LICENSE No. 73778 ★ STATE OF FLORIDA ★ PROFESSIONAL ENGINEER

HERMES F. NORERO, P.E.
FLORIDA P.E. NO. 73778
398 E. DANIA BEACH BLVD. #338
DANIA BEACH, FL 33004
FBPE CERT. OF AUTHORIZATION No. 29578

DATE: 06.04.15
DWN BY: BB
CHK BY: HFN
SCALE: NTS

DWG #: YKK124

SHEET: 7 OF 7

6/16/2015 4:05 PM

s:\projects\ykk ap america, inc\cc-14-0738 residential fpc version 5 code change\revisions\17829\dwg\ykk124 fixed picture.dwg

THERMA TRU®

THERMA TRU DOORS
11B Industrial Dr., Edgerton, OH 43517

"Fiber-Classic" and "Benchmark by Therma-Tru"

6'8" SINGLE AND DOUBLE OPAQUE OR GLAZED PANELS W/ & W/OUT SIDELITES INSWING / OUTSWING INSULATED FIBERGLASS DOOR WITH WOOD FRAMES

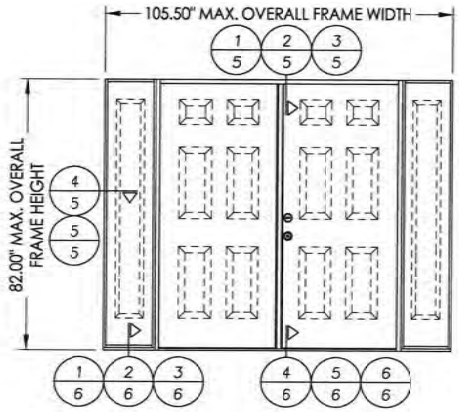

DOUBLE W/ SIDELITES OXXO
MAX DESIGN PRESSURE
+55.0 -55.0

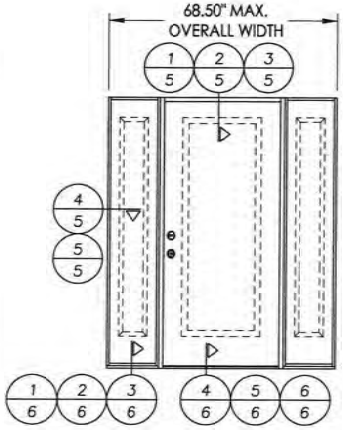

SINGLE W/ SIDELITES OXO
MAX DESIGN PRESSURE
+40.0 -40.0

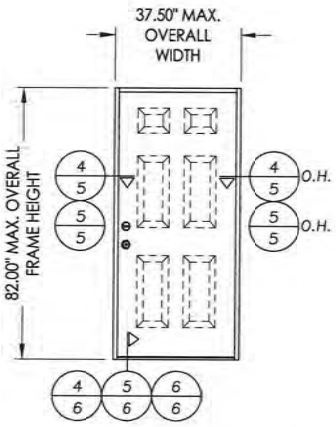

SINGLE X
MAX DESIGN PRESSURE
+67.0 -67.0

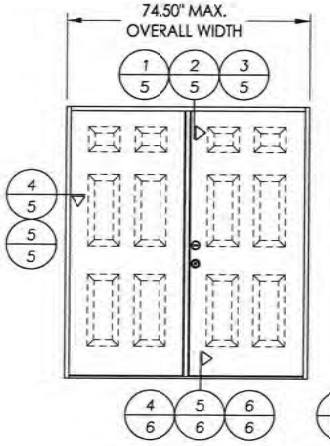

DOUBLE XX
MAX DESIGN PRESSURE
+55.0 -55.0

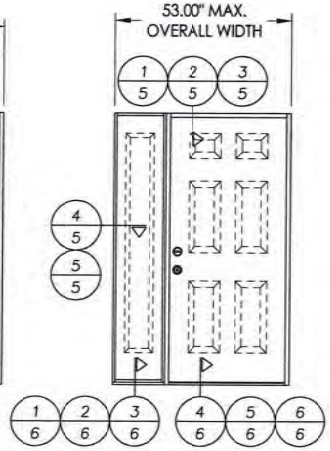

SINGLE W/SIDELITE OX
MAX DESIGN PRESSURE
+40.0 -40.0

General Notes

1. This product anchoring drawing has been developed in compliance with the 5th Edition (2014) Florida Building Code (FBC) excluding the "High Velocity Hurricane Zone". See the Certification Agency Certificate for sizes, specifications and ratings.
2. Product anchors shall be as listed and spaced as shown on details. Anchor embedment to base material shall be beyond wall dressing, stucco, foam, brick and other wall coverings.
3. Wood screws shall be installed following installation instructions of ANSI/AF&PA NDS 2012. All other fastener types to be installed following fastener manufacturer's installation instructions.
4. Fastener embedment depths, edge distances and center-center distances shall be as specified by the fastener manufacturer but in no instance shall they be less than shown in this drawing.
5. Where shims are used, they must be a "rigid / stiff" material that complies with the requirements of the FBC.
6. Positive and negative design pressure requirements for use with this drawing shall be determined by others for specific jobs in accordance with the governing code.
7. Site conditions not covered by this drawing are subject to further engineering analysis.

TABLE OF CONTENTS

SHEET #	DESCRIPTION
1	Typical elevations, design pressures & general notes
2	Buck anchoring
3	Frame anchoring
4	Frame anchoring & bill of materials
5	Horizontal & vertical cross sections
6	Vertical cross sections

LOCK HARDWARE MFG & SERIES
KWIKSET SIGNATURE SERIES LATCH
KWIKSET SIGNATURE SERIES 780 DEADBOLT

Documents Prepared By:
Lyndon F. Schmidt
P.E. No. 43409
BUILDING CONSULTANTS, INC.
P.O. Box 230, Valrico, FL 33595
Phone No.: 813.659.9197
FBPE C.A. No. 9813

L. F. SCHMIDT LICENSE No. 43409 STATE OF FLORIDA PROFESSIONAL ENGINEER

PRODUCT: THERMA-TRU FIBERGLASS DOOR

PART OR ASSEMBLY: TYPICAL ELEVATION, DESIGN PRESSURES & GENERAL NOTES

NO.	DATE	REVISIONS	BY
1	2/05/15	UPDATE TO 5TH ED. (2014) FBC	LFS

DATE: 2/21/12
SCALE: N.T.S.
DWG. BY: JK
CHK. BY: LFS
DRAWING NO.: FL-15225.3-68
SHEET 1 OF 6

© 2012 R.W. BUILDING CONSULTANTS INC.

R:\Clients\Therma Tru PERMANENT\Florida Product Approvals\FL-15225\Drawings\Current\FL-15225.3.dwg, FL-15225.3-68

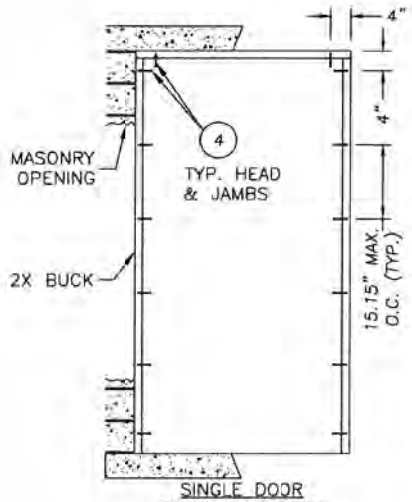

SINGLE DOOR BUCK ANCHORING

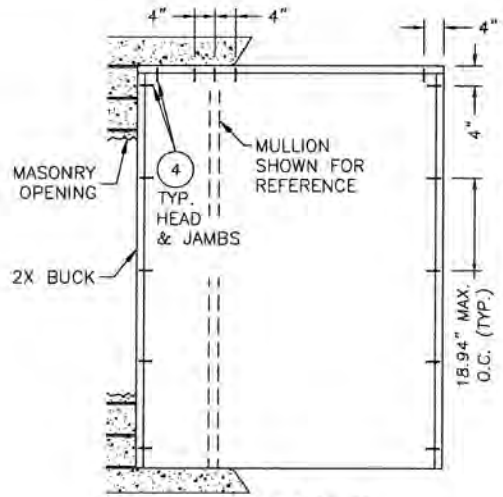

SINGLE W/SIDELITE BUCK ANCHORING

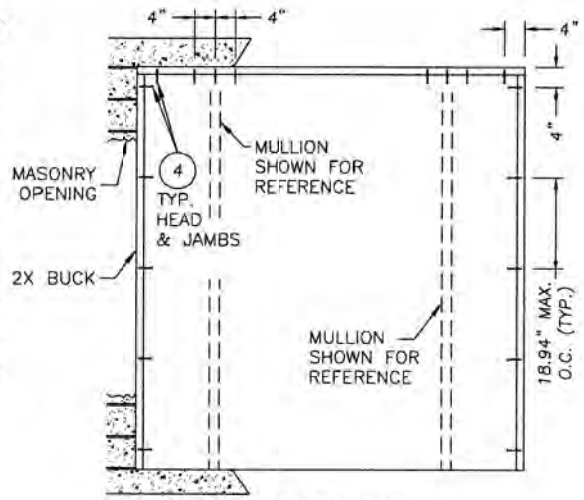

SINGLE W/SIDELITES BUCK ANCHORING

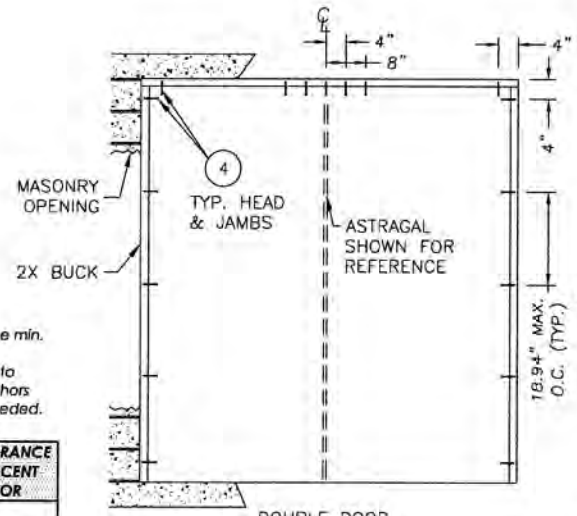

DOUBLE DOOR BUCK ANCHORING

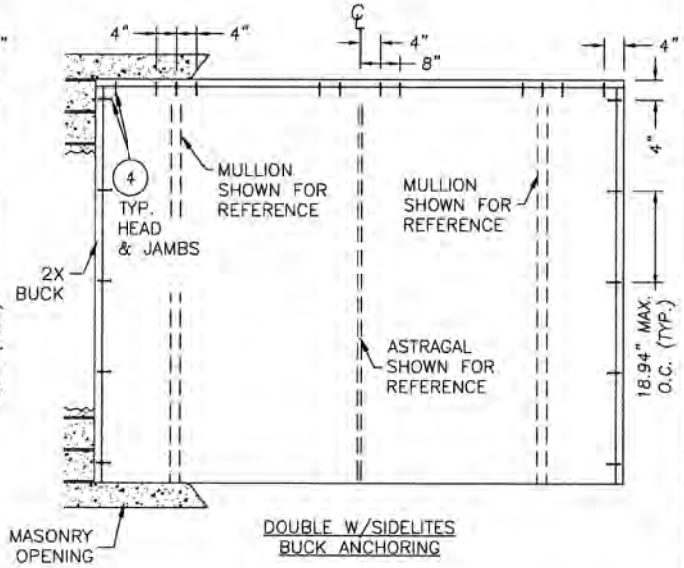

DOUBLE W/SIDELITES BUCK ANCHORING

NOTES:

1. *2X buck min. S.G. ≥0.55.*

CONCRETE ANCHOR NOTES:

1. *Concrete anchor locations at the corners may be adjusted to maintain the min. edge distance to mortar joints.*
2. *Concrete anchor locations noted as "MAX. ON CENTER" must be adjusted to maintain the min. edge distance to mortar joints, additional concrete anchors may be required to ensure the "MAX. ON CENTER" dimension are not exceeded.*
3. *Concrete anchor table:*

ANCHOR TYPE	ANCHOR SIZE	MIN. EMBEDMENT	MIN. CLEARANCE TO MASONRY EDGE	MIN. CLEARANCE TO ADJACENT ANCHOR
ITW TAPCON®	1/4"	1-1/4"	2"	4"
ELCO ULTRACON®	1/4"	1-1/4"	1"	4"

LYNDON F. SCHMIDT LICENSE No. 43409 STATE OF FLORIDA PROFESSIONAL ENGINEER

2-21-15

Documents Prepared By:
Lyndon F. Schmidt
P.E. No. 43409

R.W. BUILDING CONSULTANTS, INC.
P.O. Box 230, Valrico, FL 33595
Phone No.: 813.659.9197
FBPE C.A. No. 9813

PRODUCT: THERMA-TRU FIBERGLASS DOOR

PART OR ASSEMBLY: BUCK ANCHORING

NO.	DATE	REVISIONS	BY
1	2/05/15	UPDATE TO 5TH ED. (2014) FBC	LFS

DATE: 2/21/12
SCALE: N.T.S.
DWG. BY: JK
CHK. BY: LFS
DRAWING NO.: FL-15225.3-68
SHEET 2 OF 6

© 2012 R.W. BUILDING CONSULTANTS INC.

R:\Clients\Therma Tru PERMANENT\Florida Product Approvals\FL-15225\Drawings\Current\FL-15225.3.dwg, 2

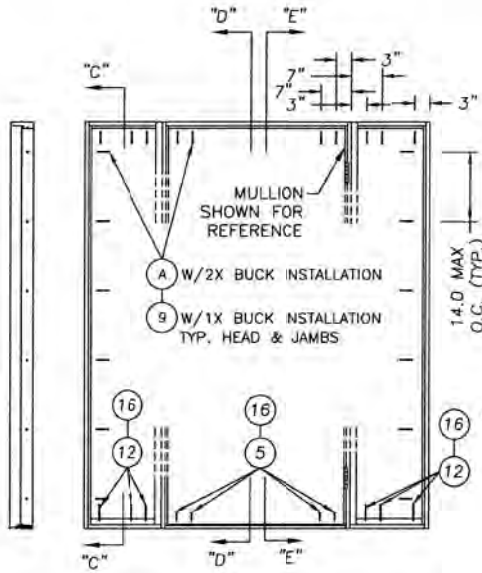

VIEW "C"–"C" SINGLE DOOR W/SIDELITES

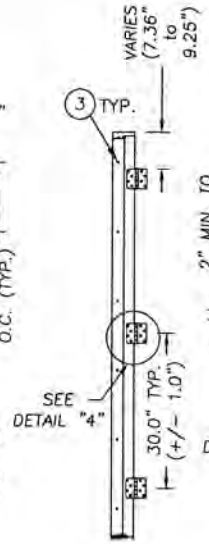

VIEW "E"–"E"

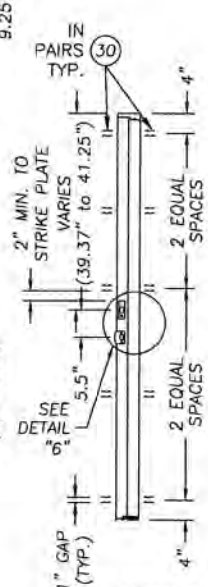

VIEW "D"–"D"

SHOWN W/ OPTIONAL CORRUGATED FASTENERS, ITEM #30 (TYP. ALL SIDELITE TO DOOR JAMB CONNECTIONS)

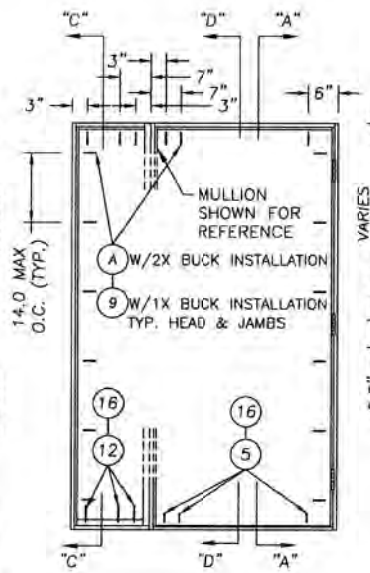

SINGLE DOOR W/SIDELITE

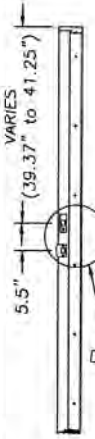

VIEW "B"–"B"

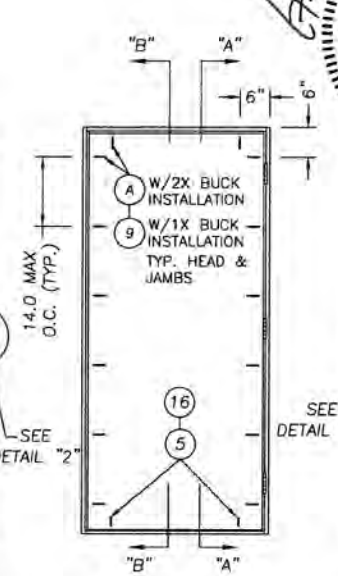

SINGLE DOOR

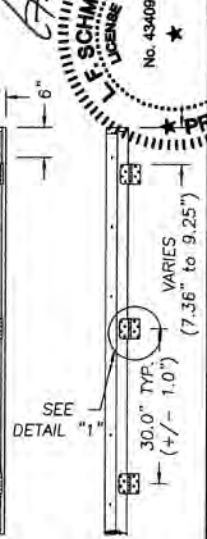

VIEW "A"–"A"

SIDELITE NOTES:

1. *The sidelite is direct set into the jamb with (12) #8 x 2" pfh. wood screws. There are (4) at each vertical jamb, from the top down at 13.5", 31", 48.5" & 66". There are (2) at the header at 4" from the outside corners of the frame. There are (2) at the sill, 4" from the outside corners.*
2. *For optional sidelite construction with staples, sidelite is direct set into the jamb with (4) 7/16" X 1-3/4" 16 ga. staples along each jamb (6" from ends and equally spaced thereafter).*

CONCRETE ANCHOR NOTES:

1. *Concrete anchor locations at the corners may be adjusted to maintain the min. edge distance to mortar joints.*
2. *Concrete anchor locations noted as "MAX. ON CENTER" must be adjusted to maintain the min. edge distance to mortar joints, additional concrete anchors may be required to ensure the "MAX. ON CENTER" dimension are not exceeded.*
3. *Concrete anchor table:*

ANCHOR TYPE	ANCHOR SIZE	MIN. EMBEDMENT	MIN. CLEARANCE TO MASONRY EDGE	MIN. CLEARANCE TO ADJACENT ANCHOR
ITW TAPCON®	1/4"	1-1/4"	2"	4"
ITW TAPCON®	3/16"	1-1/4"	3"	1-1/2"

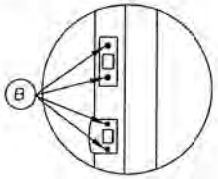

DETAIL "6"

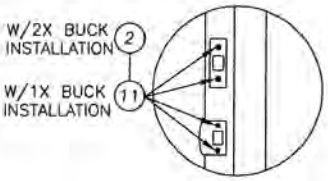

DETAIL "2"

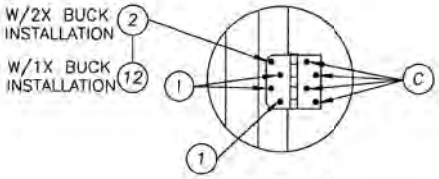

DETAIL "1"

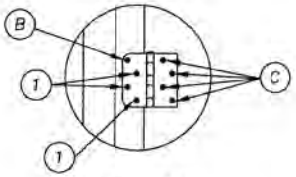

DETAIL "4"

STATE OF FLORIDA PROFESSIONAL ENGINEER LICENSE No. 43409 L. F. SCHMIDT

Documents Prepared By: Lyndon F. Schmidt P.E. No. 43409

RW BUILDING CONSULTANTS, INC. P.O. Box 230, Valrico, FL 33595 Phone No.: 813.659.9197 FBPE C.A. No. 9813

PRODUCT: THERMA-TRU FIBERGLASS DOOR

PART OR ASSEMBLY: FRAME ANCHORING

NO.	DATE	REVISIONS	BY
1	2/05/15	UPDATE TO 5TH ED. (2014) FBC	LFS

DATE: 2/21/12
SCALE: N.T.S.
DWG. BY: JK
CHK. BY: LFS
DRAWING NO.: FL-15225.3-68
SHEET 3 OF 6

© 2012 R.W. BUILDING CONSULTANTS INC.

R:\Clients\Therma Tru PERMANENT\Florida Product Approvals\FL-15225\Drawings\Current\FL-15225.3.dwg, 3

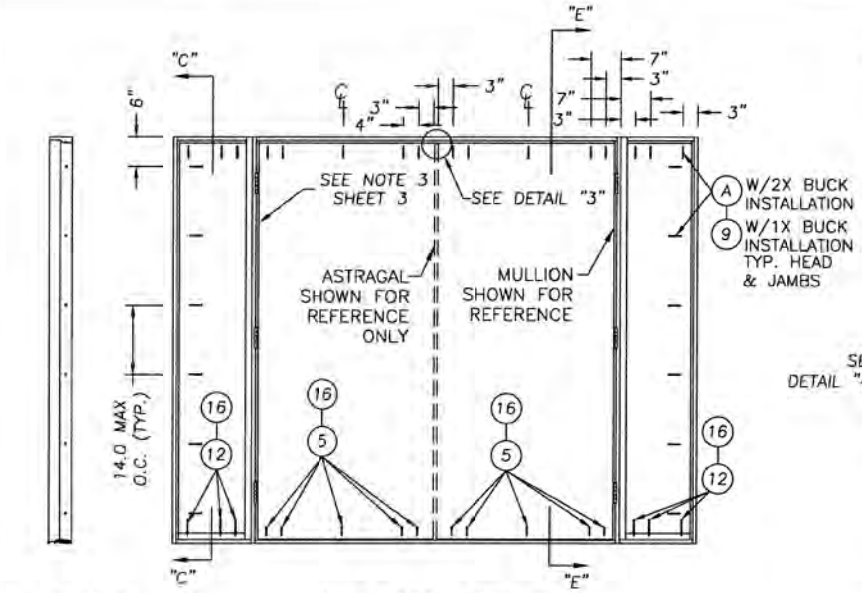

VIEW "C"–"C"

DOUBLE DOOR W/SIDELITES

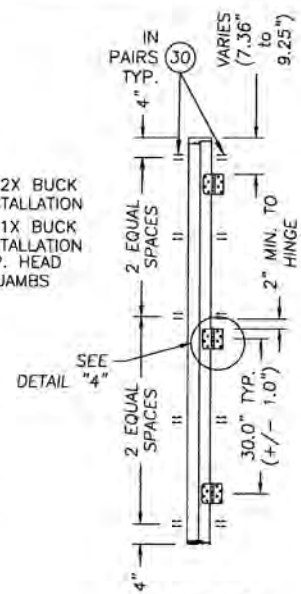

VIEW "E"–"E"

SHOWN W/ OPTIONAL CORRUGATED FASTENERS, ITEM #30 (TYP. ALL SIDELITE TO DOOR JAMB CONNECTIONS)

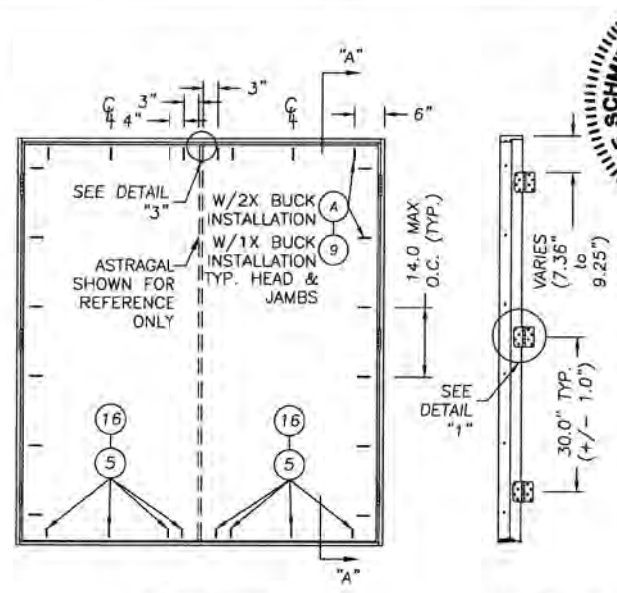

DOUBLE DOOR

VIEW "A"–"A"

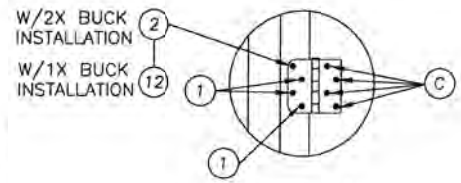

DETAIL "1"

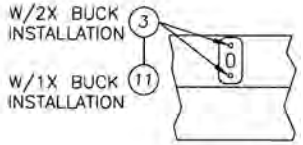

DETAIL "3"
ATTACH ASTRAGAL THROW BOLT STRIKE PLATE TO FRAME AS SHOWN.

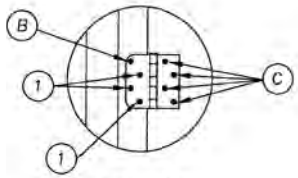

DETAIL "4"

Item	DESCRIPTION	Material
A	#10 x 2-1/2" PFH WOOD SCREW	STEEL
B	#10 X 1-3/4" PFH WOOD SCREW	STEEL
C	#10 X 1" PFH WOOD SCREW	STEEL
1	#10 x 3/4" LG. PFH WOOD SCREW (Hinge to Frame)	STEEL
2	#10 x 2" LG. PFH WOOD SCREW	STEEL
3	#8 x 2-1/2" LG. PFH WOOD SCREW	STEEL
4	1/4" x 2-3/4" PFH ELCO OR ITW CONCRETE SCREW	STEEL
5	1/4" x 1-3/4" ITW PFH CONCRETE SCREW	STEEL
9	1/4" x 3-3/4" ITW PFH CONCRETE SCREW	STEEL
11	3/16" x 3-1/4" ITW PFH CONCRETE SCREW	STEEL
12	1/4" x 3-1/4" ITW PFH CONCRETE SCREW	STEEL
13	MASONRY - 3000 PSI MIN. CONCRETE CONFORMING TO ACI 301 OR HOLLOW BLOCK CONFORMING TO ASTM C90	CONCRETE
16	1/4" X 2-1/4" PFH ITW CONCRETE SCREW	STEEL
20	HEADER JAMB (SUGAR PINE, SG >= 0.34)	WOOD
21	3/4" THK. PRESSURE TREATED SIDELITE PAD	WOOD
30	1/2" X 1" X 25 GA. CORRUGATED FASTENER	STEEL

Documents Prepared By:
Lyndon F. Schmidt
P.E. No. 43409
STATE OF FLORIDA
PROFESSIONAL ENGINEER
L. F. SCHMIDT
LICENSE No. 43409
2-7-12
RW BUILDING CONSULTANTS, INC.
P.O. Box 230, Valrico, FL 33595
Phone No.: 813.659.9197
FBPE C.A. No. 9813

PRODUCT: THERMA-TRU FIBERGLASS DOOR

PART OR ASSEMBLY: FRAME ANCHORING & BILL OF MATERIALS

NO.	DATE	REVISIONS	BY
1	2/05/15	UPDATE TO 5TH ED. (2014) FBC	LFS

DATE: 2/21/12
SCALE: N.T.S.
DWG. BY: JK
CHK. BY: LFS
DRAWING NO.: FL-15225.3-68
SHEET 4 OF 6

© 2012 R.W. BUILDING CONSULTANTS INC.

R:\Clients\Therma Tru PERMANENT\Florida Product Approvals\FL-15225\Drawings\Current\FL-15225.3.dwg, 4

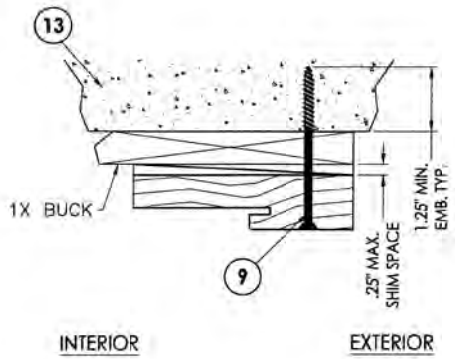

1/5 HEAD JAMB
To 1x sub-buck
Inswing shown

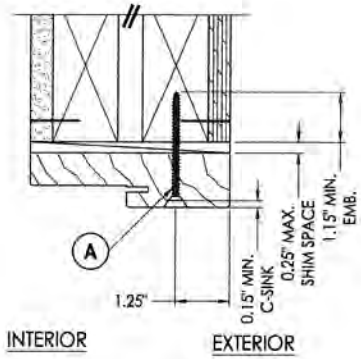

2/5 HEAD JAMB
To wood frame
Inswing shown

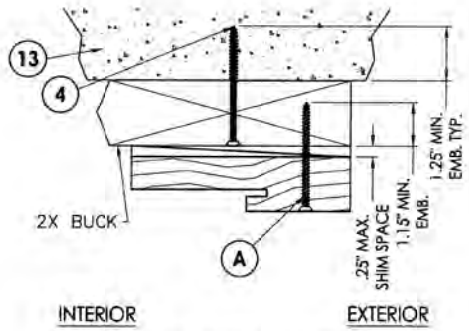

3/5 HEAD JAMB
To 2x sub-buck
Inswing shown

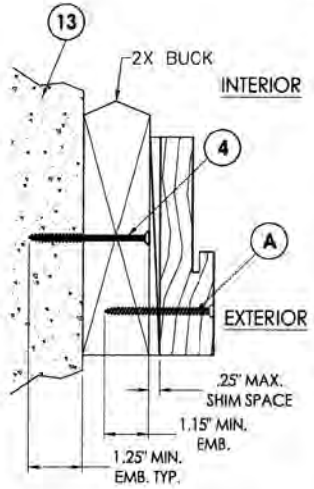

4/5 VERTICAL SIDE JAMB
To 2x sub-buck
Inswing shown

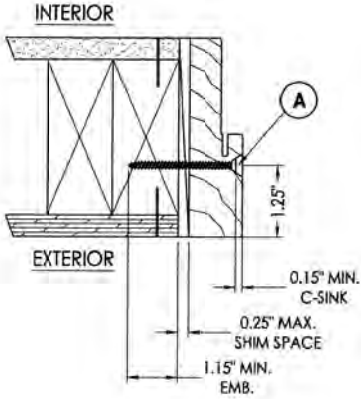

5/5 VERTICAL SIDE JAMB
To wood frame
Inswing shown

L. F. SCHMIDT
LICENSE
No. 43409
STATE OF FLORIDA
PROFESSIONAL ENGINEER

Documents Prepared By:
Lyndon F. Schmidt
P.E. No. 43409

RW BUILDING CONSULTANTS, INC.
P.O. Box 230, Valrico, FL 33595
Phone No.: 813.659.9197
FBPE C.A. No. 9813

PRODUCT: THERMA-TRU FIBERGLASS DOOR

PART OR ASSEMBLY: HORIZONTAL & VERTICAL CROSS SECTIONS

NO.	DATE	REVISIONS	BY
1	2/05/15	UPDATE TO 5TH ED. (2014) FBC	LFS

DATE: 2/21/12
SCALE: N.T.S.
DWG. BY: JK
CHK. BY: LFS
DRAWING NO.: FL-15225.3-68
SHEET 5 OF 6

© 2012 R.W. BUILDING CONSULTANTS INC.

R:\Clients\Therma Tru PERMANENT\Florida Product Approvals\FL-15225\Drawings\Current\FL-15225.3.dwg, 5

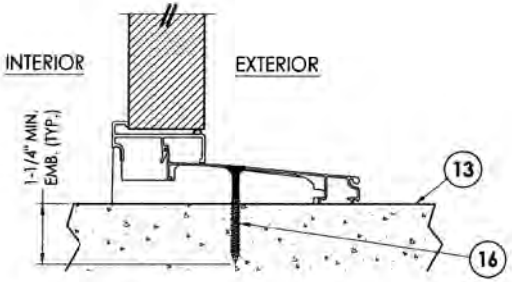

1/6 VERTICAL CROSS SECTION
Inswing configuration

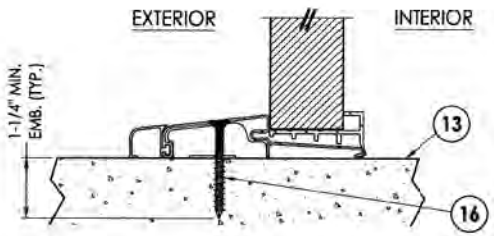

2/6 VERTICAL CROSS SECTION
Outswing configuration

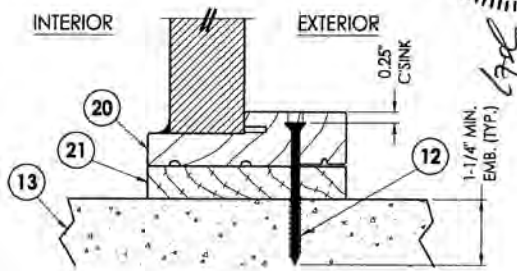

3/6 VERTICAL CROSS SECTION

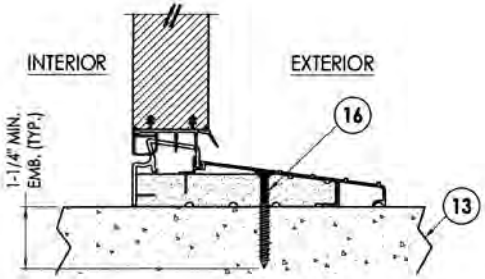

4/6 VERTICAL CROSS SECTION
Inswing configuration

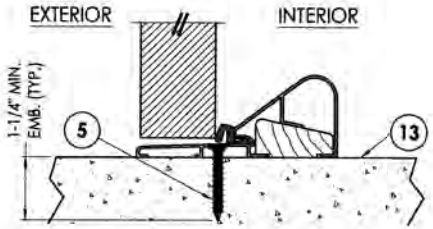

5/6 VERTICAL CROSS SECTION
Outswing configuration

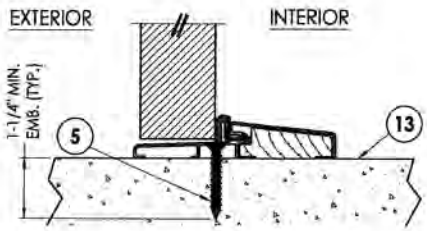

6/6 VERTICAL CROSS SECTION
Outswing configuration

L. F. SCHMIDT LICENSE No. 43409 PROFESSIONAL ENGINEER STATE OF FLORIDA

Documents Prepared By:
Lyndon F. Schmidt
P.E. No. 43409

BUILDING CONSULTANTS, INC.
P.O. Box 230, Valrico, FL 33595
Phone No.: 813.659.9197
FBPE C.A. No. 9813

PRODUCT: THERMA-TRU FIBERGLASS DOOR

PART OR ASSEMBLY: VERTICAL CROSS SECTIONS

NO.	DATE	REVISIONS	BY
1	2/05/15	UPDATE TO 5TH ED. (2014) FBC	LFS

DATE: 2/21/12
SCALE: N.T.S.
DWG. BY: JK
CHK. BY: LFS
DRAWING NO.: FL-15225.3-68
SHEET 6 OF 6

© 2012 R.W. BUILDING CONSULTANTS INC.

R:\Clients\Therma Tru PERMANENT\Florida Product Approvals\FL-15225\Drawings\Current\FL-15225.3.dwg, 6

Force Engineering & Testing Inc.
19530 Ramblewood Drive
Humble,TX 77338

Product Evaluation Report

TRI COUNTY METALS

29 Ga. Ultra-Rib Roof Panel over 1x4 Wood Purlins over 15/32" Plywood

Florida Product Approval # 4595.18 R4

Florida Building Code 2017
Per Rule 61G20-3
Method: 1 –D

Category: Roofing
Subcategory: Metal Roofing
Compliance Method: 61G20-3.005(1)(d)
NON HVHZ

Product Manufacturer:
Tri County Metals
301 SE 16th Street
Trenton, Florida 32693

Engineer Evaluator:
Terrence E. Wolfe, P.E. # 44923
Florida Evaluation ANE ID: 1920

Validator:
Brian Jaks P.E. #70159

Contents:
Evaluation Report Pages 1 – 4

TERRENCE E. WOLFE
LICENSE
No. 44923
STATE OF
FLORIDA
PROFESSIONAL ENGINEER
State of Florida
C.O.A.
#26778

August 14, 2017

Force Engineering & Testing Inc.
19530 Ramblewood Drive
Humble,TX 77338

Compliance Statement: The product as described in this report has demonstrated compliance with the Florida Building Code 2017, Sections 1504.3.2, 1504.7.

Product Description: Ultra-Rib Roof Panel, Min. 29 Ga. Steel, 36" Wide, through fastened roof panel over 1x4 wood purlins over 15/32" APA Plywood decking. Non-structural Application.

Panel Material/Standards: Material: Min. 29 Ga. Steel conforming to Florida Building Code 2017 Section 1507.4.3.
Yield Strength: Min. 80.0 ksi
Corrosion Resistance: Panel Material shall comply with Florida Building Code 2017, Section 1507.4.3.

Panel Dimension(s):

Thickness:	0.014" min.
Width:	36" maximum coverage
Rib Height:	¾" major rib at 9" O.C.

Panel Fastener: #9-15 x 1-1/2" HWH Woodgrip with sealing washing or approved equal
¼" minimum penetration through plywood
Corrosion Resistance: Per Florida Building Code 2017, Section 1507.4.4.

Substrate Description: Min. 1x4 No. 2 SYP wood purlins over min. 15/32" thick, APA Rated plywood over supports at maximum 24" O.C. The 1x4 wood purlins shall be fastened through the plywood into the wood rafters with minimum (2) 8x3" Deck screw at a maximum of 24" O.C. Design of 1x4 wood purlins, plywood and plywood supports are outside the scope of this evaluation. Substrate must be designed in accordance w/ Florida Building Code 2017.

Allowable Design Uplift Pressures:

Table "A"

Maximum Total Uplift Design Pressure:	93.5 psf	138.5 psf
Fastener Pattern:	9"-9"-9"-9"	6"-3"-6"-3"-6"-3"-6"
Fastener Spacing:	24" O.C.	24" O.C.

*Design Pressure includes a Safety Factor = 2.0.

TERRENCE E. WOLFE
LICENSE
No. 44923
STATE OF
FLORIDA
PROFESSIONAL ENGINEER

State of Florida
C.O.A.
#26778

FL# 4595.18 R4

August 14, 2017

Force Engineering & Testing Inc.
19530 Ramblewood Drive
Humble,TX 77338

Code Compliance: The product described herein has demonstrated compliance with The Florida Building Code 2017, Section 1504.3.2, 1504.7.

Evaluation Report Scope: The product evaluation is limited to compliance with the structural wind load requirements of the Florida Building Code 2017, as relates to Rule 61G20-3.

Performance Standards: The product described herein has demonstrated compliance with:

- UL 580-06 - Test for Uplift Resistance of Roof Assemblies
- UL 1897-2012 - Uplift Test for Roof Covering Systems
- FM 4471-92 - Foot Traffic Resistance Test

Reference Data:

1. UL 580-94 / 1897-98 Uplift Test
   Force Engineering & Testing, Inc. (FBC Organization # TST-5328)
   Report No. 136-0408T-09A, B, Dated 11/18/2009
2. FM 4471-10, Section 4.4 Foot Traffic Resistance Test
   Force Engineering & Testing, Inc. (FBC Organization # TST-5328)
   Report No. 136-0027T-12C, Dated 02/16/2012
3. Certificate of Independence
   By Terrence E. Wolfe, P.E. (No. 44923) @ Force Engineering & Testing, Inc. (FBC Organization # ANE ID: 1920)

Test Standard Equivalency:

1. The UL 580-94 test standard is equivalent to the UL 580-06 test standard.
2. The UL 1897-98 test standard is equivalent to the UL 1897-2012 test standard.
3. The FM 4471-10, Foot Traffic Resistance test standard is equivalent to the FM 4471-92, Foot Traffic Resistance test standard

Quality Assurance Entity: The manufacturer has established compliance of roof panel products in accordance with the Florida Building Code and Rule 61G20-3.005 (3) for manufacturing under a quality assurance program audited by an approved quality assurance entity.

Minimum Slope Range: Minimum Slope shall comply with Florida Building Code 2017, including Section 1507.4.2 and in accordance with Manufacturers recommendations. For slopes less than 3:12, lap sealant must be used in the panel side laps.

Installation: Install per manufacturer's recommended details.

TERRENCE E. WOLFE
LICENSE
No. 44923
STATE OF
FLORIDA
PROFESSIONAL ENGINEER

State of Florida
C.O.A.
#26778

FL# 4595.18 R4

August 14, 2017

Force Engineering & Testing Inc.
19530 Ramblewood Drive
Humble,TX 77338

Underlayment: Per Florida Building Code 2017, Section 1507.1.1 and manufacturer's installation guidelines.

Roof Panel Fire Classification: Fire classification is not part of this acceptance.

Shear Diaphragm: Shear diaphragm values are outside the scope of this report.

Design Procedure: Based on the dimensions of the structure, appropriate wind loads are determined using Chapter 16 of the Florida Building Code 2017 for roof cladding wind loads. These component wind loads for roof cladding are compared to the allowable pressure listed above. The design professional shall select the appropriate erection details to reference in his drawings for proper fastener attachment to his structure and analyze the panel fasteners for pullout and pullover. Support framing must be in compliance with Florida Building Code 2017 Chapter 22 for steel, Chapter 23 for wood and Chapter 16 for structural loading.

FL# 4595.18 R4

August 14, 2017

MIN. 29 GA. ULTRA-RIB PANEL OVER 1X4 WOOD PURLINS

TYPE 1 FASTENER PATTERN AT 24" O.C.

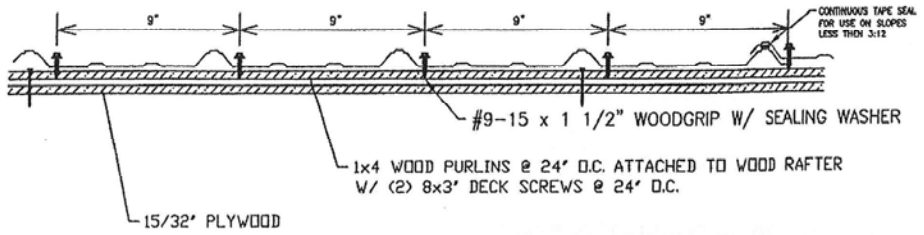

TYPE 2 FASTENER PATTERN AT 24" O.C.

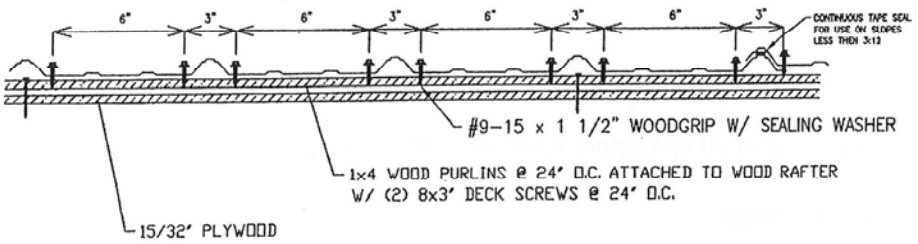

State of Florida
C.O.A.
26778

TERRENCE E. WOLFE
LICENSE
No.44923
STATE OF
FLORIDA
PROFESSIONAL ENGINEER

AUG 1 4 2017

AMERICAN CONSTRUCTION METALS

5140 West Clifton Street
Tampa, FL 33634

"TRIPLE 4" & "QUAD 4"

ALUMINUM "V - GROOVE" SOFFIT

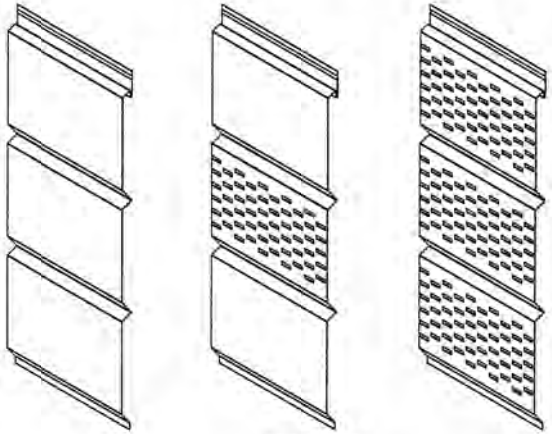

TRIPLE 4 (T4)
T-4-012 (.0115" THICK)
T-4-014 (.0135" THICK)

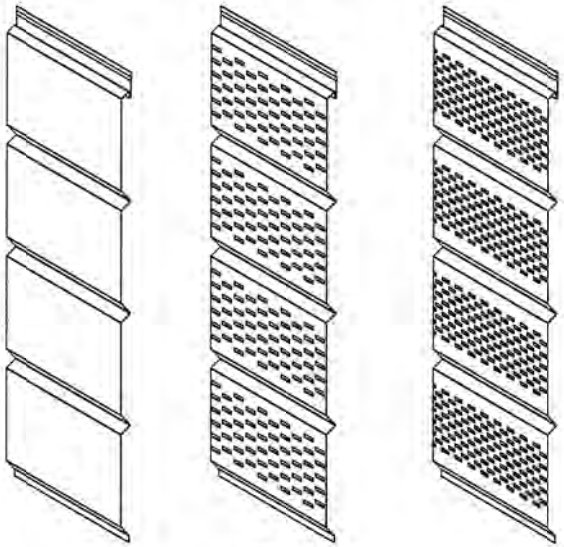

QUAD 4 (Q4)
Q-4-012 (.0115" THICK)
Q-4-014 (.0135" THICK)

GENERAL NOTES

1. This product has been evaluated and is in compliance with the 6th Edition (2017) Florida Building Code excluding the "High Velocity Hurricane Zone" (HVHZ).
2. Product anchors shall be as listed and spaced as shown on details. Anchor embedment to base material shall be beyond wall dressing or stucco.
3. Site conditions not covered by this drawing are subject to further engineering analysis.
4. Wood/CMU wall construction, by others, must be designed properly to receive loads from the soffit and/or 2" x 2" batten strips.
5. Aluminum soffits shall conform to the specification and labelling requirements of FBC Section 1709.10.

TABLE OF CONTENTS

SHEET #	DESCRIPTION
1	Typical elevations & general notes
2	Panel details
3	Soffit details & design pressures
4	Soffit details & design pressures
5	Soffit details, design pressures & bill of materials

L. F. SCHMIDT LICENSE No. 43409 PROFESSIONAL ENGINEER STATE OF FLORIDA

12-15-17

Documents Prepared By:
Lyndon F. Schmidt
P.E. No. 43409

BUILDING CONSULTANTS, INC.
P.O. Box 230, Valrico, FL 33595
Phone No.: 813.659.9197
FBPE C.A. No. 9813

PRODUCT: ALUMINUM SOFFIT

PART OR ASSEMBLY: TYPICAL ELEVATIONS & GENERAL NOTES

NO.	DATE	REVISIONS	BY
5	12/15/17	UPDATE TO 6TH ED. (2017) FBC	LFS
4	03/02/15	UPDATE TO 5TH ED. (2014) FBC	JK
3	12/13/11	UPDATE FOR 2010 FBC	LFS
2	3/9/10	ADD DETAILS	JK
1	3/31/09	ADD DETAILS	JK

DATE: 01/01/09
SCALE: N.T.S.
DWG. BY: JK
CHK. BY: LFS
DRAWING NO.: FL-12019.1
SHEET 1 OF 5

© 2009 R.W. BUILDING CONSULTANTS INC.

R:\Clients\American Construction Metals PERMANENT\A - Florida Product Approvals\FL-12019\C - Drawings\Current\FL-12019.1.dwg

SOFFIT AIR FLOW TABLE

SOFFIT TYPE		AIR FLOW			SOFFIT TYPE		AIR FLOW		
		FREE FLOW AREA (in^2/ft^2)	FREE FLOW AREA (in^2/linear ft)	% FREE FLOW AREA			FREE FLOW AREA (in^2/ft^2)	FREE FLOW AREA (in^2/linear ft)	% FREE FLOW AREA
TRIPLE 4	CENTER VENT NARROW PATTERN	3.91	3.91*	2.71 %	QUAD 4				
	FULL VENT NARROW PATTERN	11.74	11.74*	8.15 %		FULL VENT NARROW PATTERN	11.74	15.61*	8.15 %
	FULL VENT WIDE PATTERN	3.69	3.69*	2.56 %		FULL VENT WIDE PATTERN	3.69	4.91*	2.56 %

* FREE FLOW AREA IS PER LINEAR FOOT OF OVERHANG (SPAN "A" ON SHEETS 3, 4 & 5) PER PANEL (12" TRIPLE 4 PANEL OR 16" QUAD 4 PANEL)

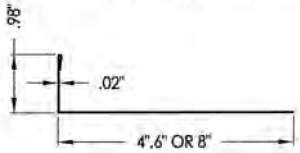

1 **FASCIA**
Aluminum

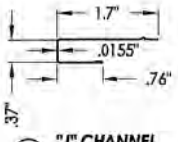

2 **"J" CHANNEL**
Aluminum

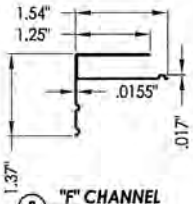

3 **"F" CHANNEL**
Aluminum

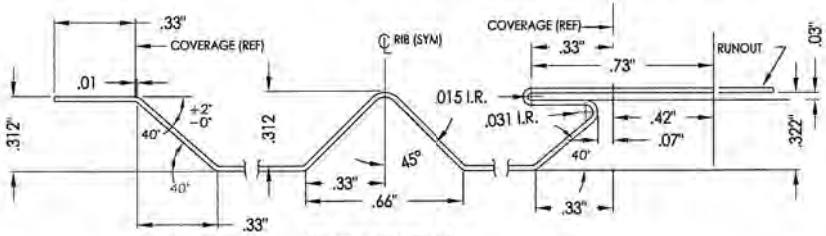

RIB AND END DETAILS

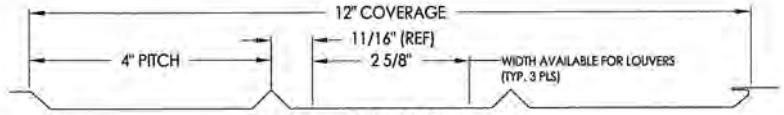

6 **TRIPLE 4 PANEL**

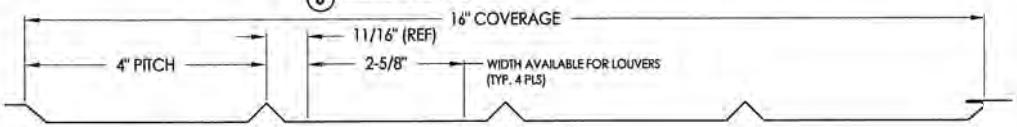

5 **QUAD 4 PANEL**

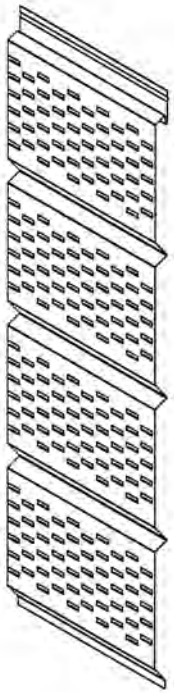

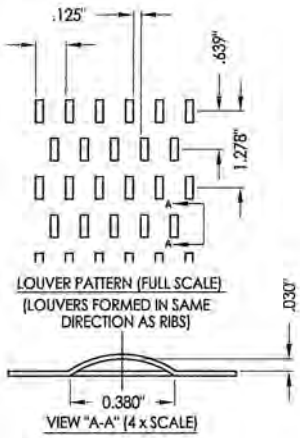

5 6 **FULL VENT - WIDE PATTERN**
(Louvers formed in same Direction as ribs)

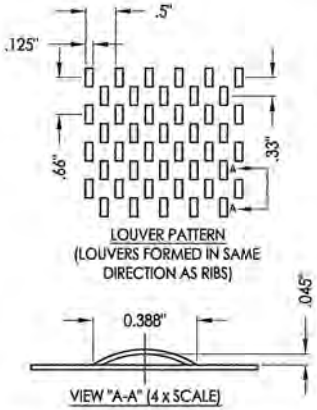

5 6 **FULL VENT - NARROW VENT PATTERN**
(Louvers formed in same direction as ribs)

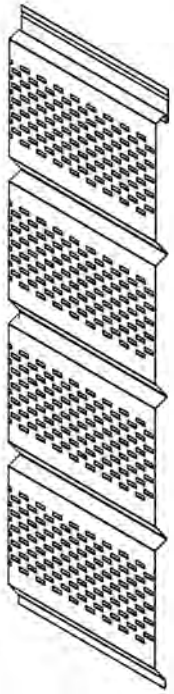

Documents Prepared By:
Lyndon F. Schmidt
P.E. No. 43409

R.W. BUILDING CONSULTANTS, INC.
P.O. Box 230, Valrico, FL 33595
Phone No.: 813.659.9197
FBPE C.A. No. 9813

PRODUCT: ALUMINUM SOFFIT

PART OR ASSEMBLY: PANEL DETAILS

NO.	DATE	REVISIONS	BY
5	01/01/09	UPDATE TO 6TH ED. (2017) FBC	LFS
4	03/02/15	UPDATE TO 5TH ED. (2014) FBC	JK
3	12/13/11	UPDATE FOR 2010 FBC	LFS
2	3/9/10	ADD DETAILS	JK
1	3/31/09	ADD DETAILS	JK

DATE: 01/01/09
SCALE: N.T.S.
DWG. BY: JK
CHK. BY: LFS
DRAWING NO.: FL-12019.1
SHEET 2 OF 5

© 2009 R.W. BUILDING CONSULTANTS INC.

R:\Clients\American Construction Metals PERMANENTVA - Florida Product Approvals\FL-12019\C - Drawings\Current\FL-12019.1.dwg, 1-2

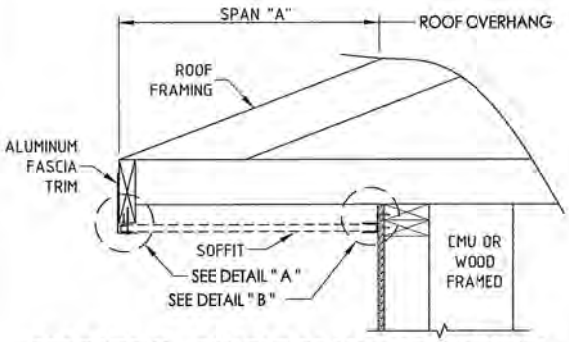

SIDE VIEW - SINGLE SPAN w/F-CHANNEL

(Shown w/ truss/framing cantilever)

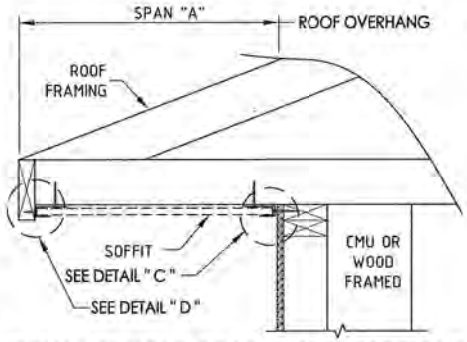

SIDE VIEW - SINGLE SPAN w/J-CHANNELS

(Shown w/ truss/framing cantilever)

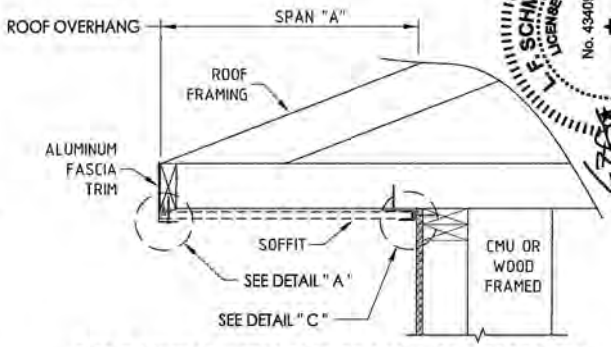

SIDE VIEW - SINGLE SPAN w/J-CHANNEL

(Shown w/ truss/framing cantilever)

SINGLE SPAN LENGTH "A"	DESIGN PRESSURE (PSF)	
	POSITIVE	NEGATIVE
8"	+70.0	-141.0
10"	+60.0	-60.0
12"	+50.0	-50.0
14"	+38.5	-38.5
16"	+30.0	-30.0

NOTE: WOOD FRAMING AND CONNECTIONS TO BE DESIGNED BY THE ARCHITECT OR ENGINEER OF RECORD

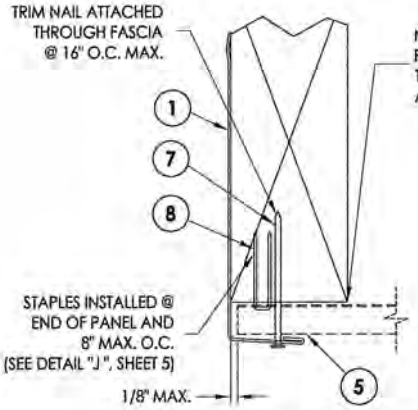

DETAIL " A "

Fascia

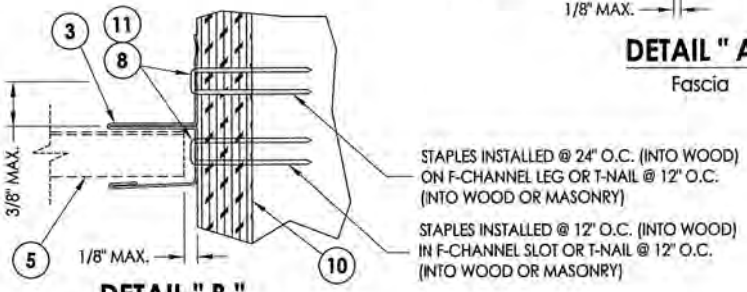

DETAIL " B "

F-Channel

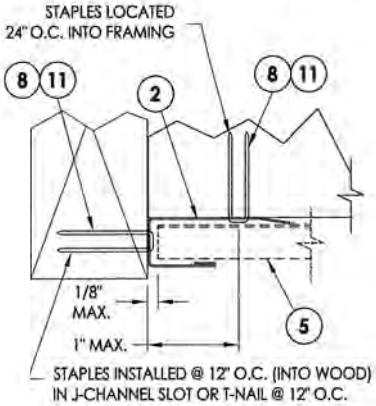

DETAIL " D "

J-Channel
Fascia

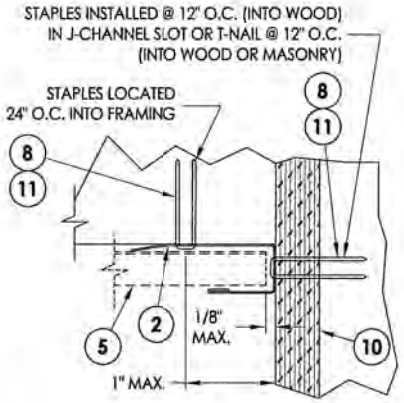

DETAIL " C "

J-Channel

SUBSTRATE NOTES:
1. WOOD SUBSTRATE: G = 0.42 OR BETTER
2. MASONRY SUBSTRATE: 3,000 PSI CONCRETE (ACI 301) OR HOLLOW BLOCK (ASTM C90).

STATE OF FLORIDA PROFESSIONAL ENGINEER
LYNDON F. SCHMIDT
LICENSE No. 43409
12-15-17

Documents Prepared By:
Lyndon F. Schmidt
P.E. No. 43409

R.W. BUILDING CONSULTANTS, INC.
P.O. Box 230, Valrico, FL 33595
Phone No.: 813.659.9197
FBPE C.A. No. 9813

PRODUCT: ALUMINUM SOFFIT

PART OR ASSEMBLY: SOFFIT DETAILS & DESIGN PRESSURES

NO.	DATE	REVISIONS	BY
5	01/01/09	UPDATE TO 6TH ED. (2017) FBC	LFS
4	03/02/15	UPDATE TO 5TH ED. (2014) FBC	JK
3	12/13/11	UPDATE FOR 2010 FBC	LFS
2	3/9/10	ADD DETAILS	JK
1	3/31/09	ADD DETAILS	JK

DATE: 1/9/09
SCALE: N.T.S.
DWG. BY: JK
CHK. BY: LFS
DRAWING NO.: FL-12019.1
SHEET 3 OF 5

© 2009 R.W. BUILDING CONSULTANTS INC.

R:\Clients\American Construction Metals PERMANENTVA - Florida Product Approvals\FL-12019\C - Drawings\Current\FL-12019.1.dwg 1-3

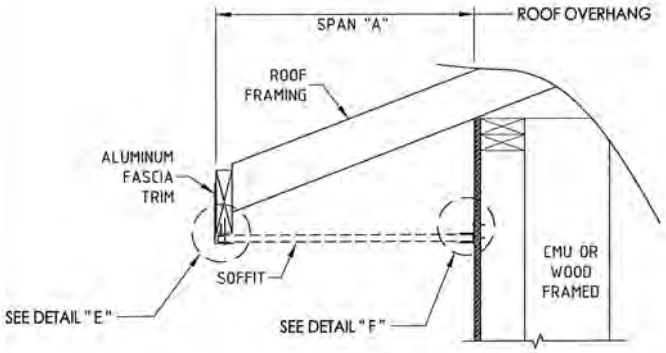

SIDE VIEW - SINGLE SPAN w/F-CHANNEL

(Shown w/ truss/framing overhang)

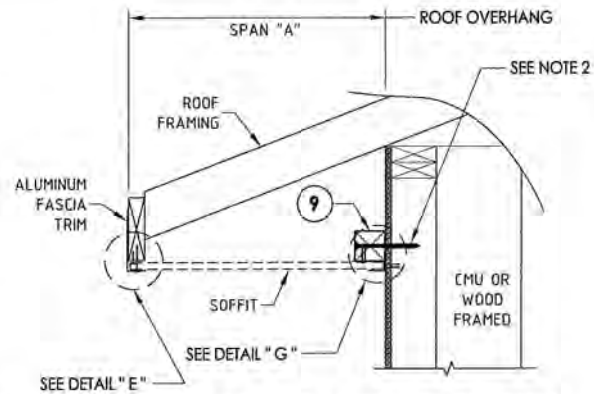

SIDE VIEW - SINGLE SPAN w/J-CHANNEL

(Shown w/ truss/framing overhang)

CONNECTOR NOTES:
1. WOOD FRAMING AND CONNECTIONS TO BE DESIGNED BY THE ARCHITECT OR ENGINEER OF RECORD
2. 12d COMMON NAIL OR 3/16" ITW TAPCON CONCRETE SCREW (MIN. 1-1/4" EMBEDMENT) @ 24" ON CENTER

SINGLE SPAN LENGTH "A"	DESIGN PRESSURE (PSF)	
	POSITIVE	NEGATIVE
8"	+70.0	-141.0
10"	+60.0	-60.0
12"	+50.0	-50.0
14"	+38.5	-38.5
16"	+30.0	-30.0

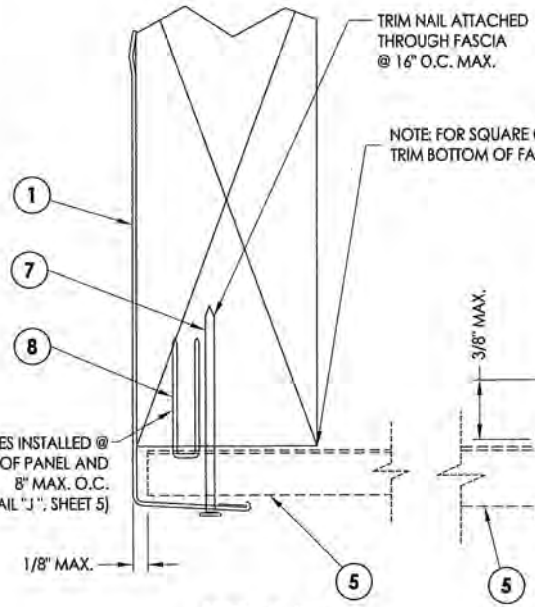

DETAIL " E "

Fascia

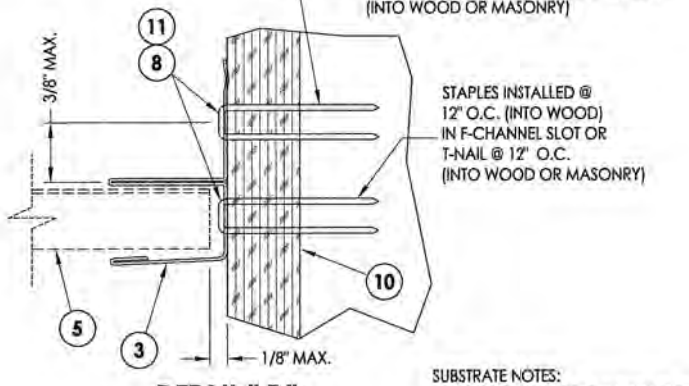

DETAIL " F "

F-Channel

SUBSTRATE NOTES:
1. WOOD SUBSTRATE: G = 0.42 OR BETTER
2. MASONRY SUBSTRATE: 3,000 PSI CONCRETE (ACI 301) OR HOLLOW BLOCK (ASTM C90).

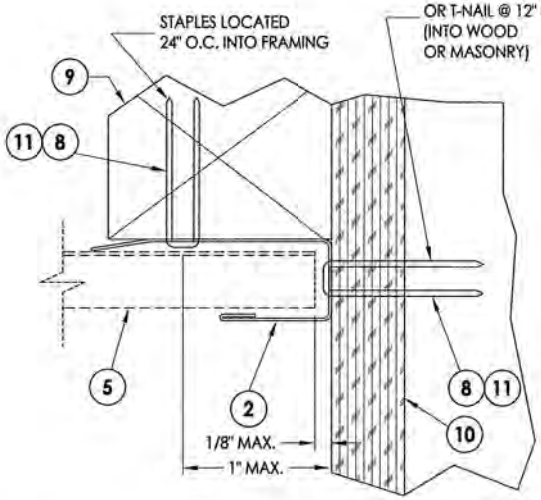

DETAIL " G "

J-Channel

L. F. SCHMIDT LICENSE No. 43409 STATE OF FLORIDA PROFESSIONAL ENGINEER

12-15-17

Documents Prepared By:
Lyndon F. Schmidt
P.E. No. 43409

BUILDING CONSULTANTS, INC.
P.O. Box 230, Valrico, FL 33595
Phone No.: 813.659.9197
FBPE C.A. No. 9813

PRODUCT: ALUMINUM SOFFIT

PART OR ASSEMBLY: SOFFIT DETAILS & DESIGN PRESSURES

NO.	DATE	REVISIONS	BY
5	01/01/09	UPDATE TO 6TH ED. (2017) FBC	LFS
4	03/02/15	UPDATE TO 5TH ED. (2014) FBC	JK
3	12/13/11	UPDATE FOR 2010 FBC	LFS
2	3/9/10	ADD DETAILS	JK
1	3/31/09	ADD DETAILS	JK

DATE: 1/9/09
SCALE: N.T.S.
DWG. BY: JK
CHK. BY: LFS
DRAWING NO.: FL-12019.1
SHEET 4 OF 5

© 2009 R.W. BUILDING CONSULTANTS INC.

R:\Clients\American Construction Metals PERMANENT\A - Florida Product Approvals\FL-12019\C - Drawings\Current\FL-12019.1.dwg 1-4

ITEM	DESCRIPTION	MATERIAL
1	FASCIA .0215" THK. ALUM. 3105 - H14	ALUMINUM
2	"J" CHANNEL .0155" THK. ALUM. 3105 - H24	ALUMINUM
3	"F" CHANNEL .0155" THK. ALUM. 3104 - H19	ALUMINUM
5	QUAD 4 PANEL (.0115 OR .0135" THICK) ALUM. 3105	ALUMINUM
6	TRIPLE 4 PANEL (.0115 OR .0135" THICK) ALUM. 3105	ALUMINUM
7	#15 x 1-3/4" TRIM NAIL	S.S.
8	18" GA. X 1/4" SS STAPLE (w/ 7/8" MIN. EMBEDMENT)	STEEL
9	2" X 2" BATTEN STRIP (G=.42 OR BETTER)	WOOD
10	APA B-C- GROUP 1 EXT. 15/32" PLYWOOD OR BETTER	WOOD
11	.097" DIA. T-NAIL (w/ 5/8" MIN. EMBEDMENT)	STEEL

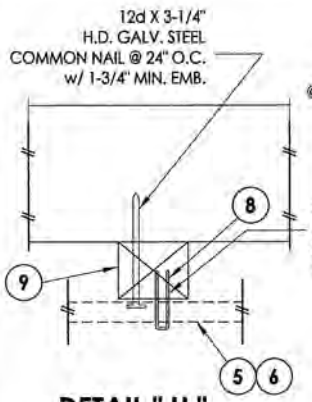

DETAIL " H "

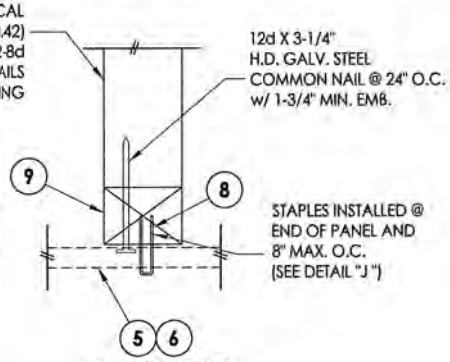

DETAIL " I "

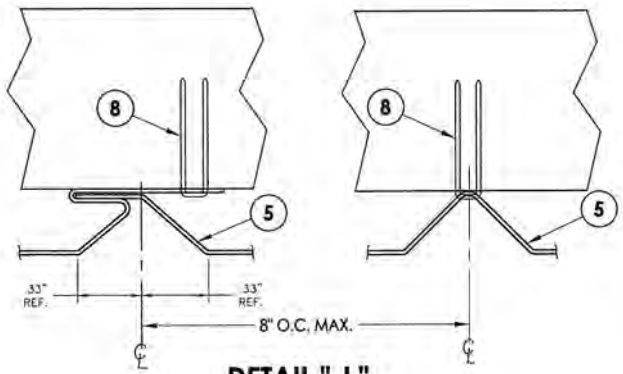

DETAIL " J "

TWIN SPAN LENGTH w/CONTINUOUS BATTEN "A"	DESIGN PRESSURE (PSF)	
	POSITIVE	NEGATIVE
16"	+70.0	-70.0
18"	+66.5	-66.5
20"	+60.0	-60.0
22"	+54.5	-54.5
24"	+50.0	-50.0

CONNECTOR NOTES:
1. WOOD FRAMING AND CONNECTIONS TO BE DESIGNED BY THE ARCHITECT OR ENGINEER OF RECORD
2. 12d COMMON NAIL OR 3/16" ITW TAPCON CONCRETE SCREW (MIN. 1-1/4" EMBEDMENT) @ 24" ON CENTER

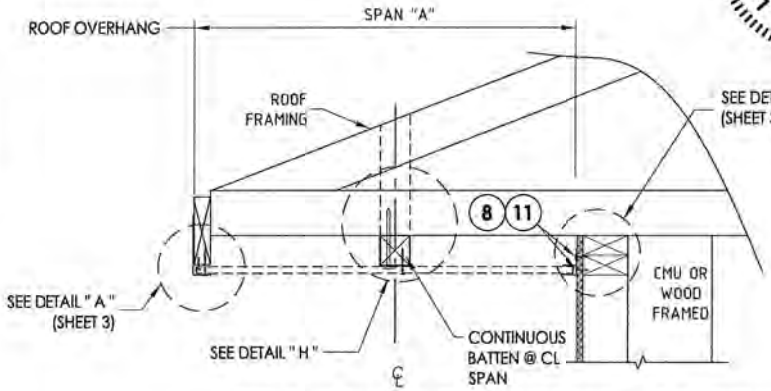

SIDE VIEW - DOUBLE SPAN w/BATTEN

(Shown w/ truss/framing cantilever)

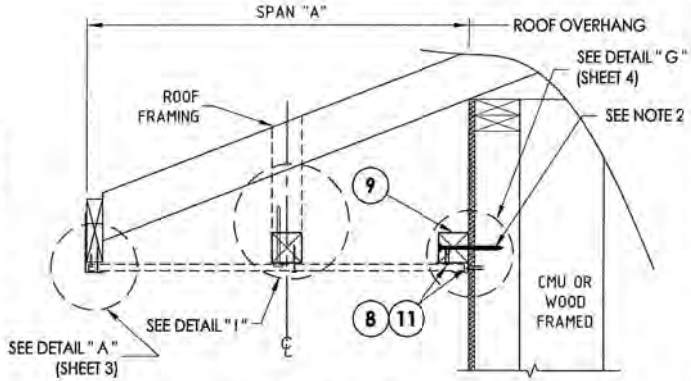

SIDE VIEW - DOUBLE SPAN w/BATTEN

(Shown w/ truss/framing overhang)

SUBSTRATE NOTES:
1. WOOD SUBSTRATE: G = 0.42 OR BETTER
2. MASONRY SUBSTRATE: 3,000 PSI CONCRETE (ACI 301) OR HOLLOW BLOCK (ASTM C90).

L. F. SCHMIDT LICENSE No. 43409 PROFESSIONAL ENGINEER STATE OF FLORIDA

12-15-17

Documents Prepared By:
Lyndon F. Schmidt
P.E. No. 43409

BUILDING CONSULTANTS, INC.
P.O. Box 230, Valrico, FL 33595
Phone No.: 813.659.9197
FBPE C.A. No. 9813

PRODUCT: ALUMINUM SOFFIT

PART OR ASSEMBLY: SOFFIT DETAILS, DESIGN PRESSURES & BILL OF MATERIALS

NO.	DATE	REVISIONS	BY
5	01/01/09	UPDATE TO 6TH ED. (2017) FBC	LFS
4	03/02/15	UPDATE TO 5TH ED. (2014) FBC	JK
3	12/13/11	UPDATE FOR 2010 FBC	LFS
2	3/9/10	ADD DETAILS	JK
1	3/31/09	ADD DETAILS	JK

DATE: 1/9/09
SCALE: N.T.S.
DWG. BY: JK
CHK. BY: LFS
DRAWING NO.: FL-12019.1
SHEET 5 OF 5

© 2009 R.W. BUILDING CONSULTANTS INC.

R:\Clients\American Construction Metals PERMANENT\A - Florida Product Approvals\FL-12019\C - Drawings\Current\FL-12019.1.dwg, 1-5