(16-0982-/HUBBART RESIDENCE /SPARKS CONST. -- , FL - K03)

THIS DWG PREPARED FROM COMPUTER INPUT (LOADS & DIMENSIONS) SUBMITTED BY TRUSS MFR.

Top chord 2x4 SP M-31
Bot chord 2x4 SP M-31
Webs 2x4 SP M-31

H = recommended connection based on manufacturer tested capacities and calculations. Conditions may exist that require different connections than indicated. Refer to manufacturer publication for additional information.

These support conditions used at bearings indicated
(H1) = LSU26 w/ (2)2x6 SP M-31 supporting member.
(6) 0.148"x3" nails into supporting member,
(5) 0.148"x1.5" nails into supported member.

MWFRS loads based on trusses located at least 15.00 ft. from roof edge.

130 mph wind, 15.00 ft mean hgt, ASCE 7-10, CLOSED bldg, Located anywhere in roof, RISK CAT II, EXP C, wind TC DL=5.0 psf, wind BC DL=5.0 psf. GCpi(+/-)=0.18

Wind loads and reactions based on MWFRS with additional C&C member design.

Right end vertical not exposed to wind pressure.

Bottom chord checked for 10.00 psf non-concurrent live load.

Deflection meets L/240 live and L/180 total load. Creep increase factor for dead load is 1.50.

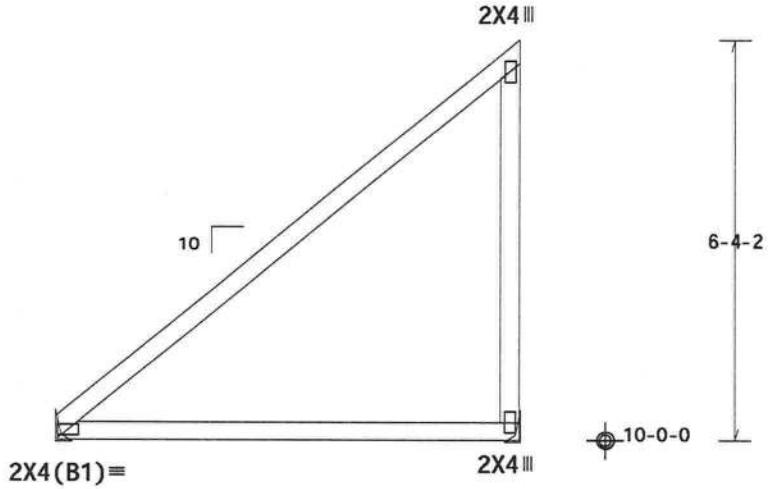

7-1-9 Over 2 Supports

R=312 U=0
RL=112/-65
H=H1

R=301 U=58
H=H2

Design Crit: FBC2014Res/TPI-2007(STD)
FT/RT=20%(0%)/10(0)

PLT TYP. Wave

16-01.09.0423.17 QTY:1 RL/-/1/-/-/R/- Scale =.375"/Ft.

TC LL	20.0 PSF	REF	R215-- 83894
TC DL	10.0 PSF	DATE	01/19/17
BC DL	10.0 PSF	DRW	HCUSR215 17019061
BC LL	0.0 PSF	HC-ENG	KD/DF
TOT.LD.	40.0 PSF	SEQN-	455404
DUR.FAC.	1.25	FROM	CDM
SPACING	24.0"	JREF-	1VXM215_Z04

ALPINE™ AN ITW COMPANY
2400 Lake Orange Dr., Suite 150
Orlando, FL 32837
FL COA #0278

WARNING! READ AND FOLLOW ALL NOTES ON THIS DRAWING!
IMPORTANT FURNISH THIS DRAWING TO ALL CONTRACTORS INCLUDING THE INSTALLERS.

Trusses require extreme care in fabricating, handling, shipping, installing and bracing. Refer to and follow the latest edition of BCSI (Building Component Safety Information, by TPI and WTCA) for safety practices prior to performing these functions. Installers shall provide temporary bracing per BCSI. Unless noted otherwise, top chord shall have properly attached structural sheathing and bottom chord shall have a properly attached rigid ceiling. Locations shown for permanent lateral restraint of webs shall have bracing installed per BCSI sections B3, B7 or B10, as applicable. Apply plates to each face of truss and position as shown above and detailed in the Joint Details, unless noted otherwise. Refer to drawings 160A-Z for standard plate positions.

Alpine, a division of ITW Building Components Group Inc. shall not be responsible for any deviation from this drawing, any failure to build the truss in conformance with ANSI/TPI 1, or for handling, shipping, installation & bracing of trusses.

A seal on this drawing or cover page listing this drawing, indicates acceptance of professional engineering responsibility solely for the design shown. The suitability and use of this drawing for any structure is the responsibility of the Building Designer per ANSI/TPI 1 Sec.2.

For more information see this job's general notes page and these web sites:
ALPINE: www.alpineitw.com; TPI: www.tpinst.org; WTCA: www.sbcindustry.com; ICC: www.iccsafe.org

DOUGLAS FLEMING LICENSE No. 66646 STATE OF FLORIDA PROFESSIONAL ENGINEER

01/20/2017

(16-0982-/HUBBART RESIDENCE /SPARKS CONST. -- , FL - KO4)

THIS DWG PREPARED FROM COMPUTER INPUT (LOADS & DIMENSIONS) SUBMITTED BY TRUSS MFR.

Top chord 2x4 SP M-31
Bot chord 2x4 SP M-31
Webs 2x4 SP M-31

H = recommended connection based on manufacturer tested capacities and calculations. Conditions may exist that require different connections than indicated. Refer to manufacturer publication for additional information.

These support conditions used at bearings indicated
(H1) = LSU26 w/ (2)2x6 SP M-31 supporting member.
(6) 0.148"x3" nails into supporting member,
(5) 0.148"x1.5" nails into supported member.

MWFRS loads based on trusses located at least 15.00 ft. from roof edge.

130 mph wind, 15.00 ft mean hgt, ASCE 7-10, CLOSED bldg, not located within 9.00 ft from roof edge, RISK CAT II, EXP C, wind TC DL=5.0 psf, wind BC DL=5.0 psf. GCpi(+/-)=0.18

Wind loads and reactions based on MWFRS with additional C&C member design.

Right end vertical not exposed to wind pressure.

Bottom chord checked for 10.00 psf non-concurrent live load.

Deflection meets L/240 live and L/180 total load. Creep increase factor for dead load is 1.50.

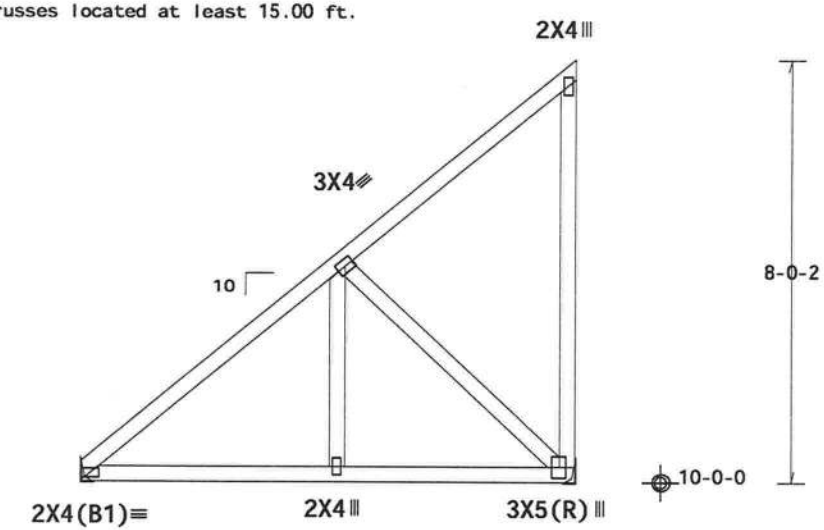

R=398 U=0
RL=144/-83
H=H1

R=387 U=74
H=H2

Design Crit: FBC2014Res/TPI-2007(STD)

PLT TYP. Wave

FT/RT=20%(0%)/10(0) 16 01.00.0413.17 QTY:1 HL/-/1/-/-/R/- Scale =.3125"/Ft.

ALPINE AN ITW COMPANY
2400 Lake Orange Dr., Suite 150
Orlando, FL 32837
FL COA #0278

WARNING! READ AND FOLLOW ALL NOTES ON THIS DRAWING!
IMPORTANT FURNISH THIS DRAWING TO ALL CONTRACTORS INCLUDING THE INSTALLERS.

Trusses require extreme care in fabricating, handling, shipping, installing and bracing. Refer to and follow the latest edition of BCSI (Building Component Safety Information, by TPI and WTCA) for safety practices prior to performing these functions. Installers shall provide temporary bracing per BCSI. Unless noted otherwise, top chord shall have properly attached structural sheathing and bottom chord shall have a properly attached rigid ceiling. Locations shown for permanent lateral restraint of webs shall have bracing installed per BCSI sections B3, B7 or B10, as applicable. Apply plates to each face of truss and position as shown above and/or the Joint Details, unless noted otherwise. Refer to drawings 160A-Z for standard plate positions.

Alpine, a division of ITW Building Components Group Inc. shall not be responsible for any deviation from this drawing, any failure to build the truss in conformance with ANSI/TPI 1, or for handling, shipping, installation & bracing of trusses.

A seal on this drawing or cover page listing this drawing, indicates acceptance of professional engineering responsibility solely for the design shown. The suitability and use of this drawing for any structure is the responsibility of the Building Designer per ANSI/TPI 1 Sec.2.

For more information see this job's general notes page and these web sites:
ALPINE: www.alpineitw.com; TPI: www.tpinst.org; WTCA: www.sbcindustry.com; ICC: www.iccsafe.org

DOUGLAS FLEMING LICENSE No. 66648 STATE OF FLORIDA PROFESSIONAL ENGINEER

TC LL	20.0 PSF	REF	R215-- 83895
TC DL	10.0 PSF	DATE	01/19/17
BC DL	10.0 PSF	DRW	HCUSR215 17019062
BC LL	0.0 PSF	HC-ENG	KD/DF
TOT.LD.	40.0 PSF	SEQN-	455403
DUR.FAC.	1.25	FROM	CDM
SPACING	24.0"	JREF-	1VXM215_Z04

01/20/2017

(16-0982-/HUBBART RESIDENCE /SPARKS CONST. -- , FL - K05)

THIS DWG PREPARED FROM COMPUTER INPUT (LOADS & DIMENSIONS) SUBMITTED BY TRUSS MFR.

Top chord 2x4 SP M-31
Bot chord 2x4 SP M-31
Webs 2x4 SP M-31

H = recommended connection based on manufacturer tested capacities and calculations. Conditions may exist that require different connections than indicated. Refer to manufacturer publication for additional information.

These support conditions used at bearings indicated
(H1) = LSU26 w/ (2)2x6 SP M-31 supporting member.
(6) 0.148"x3" nails into supporting member,
(5) 0.148"x1.5" nails into supported member.

MWFRS loads based on trusses located at least 30.08 ft. from roof edge.

130 mph wind, 15.04 ft mean hgt, ASCE 7-10, CLOSED bldg, not located within 9.00 ft from roof edge, RISK CAT II, EXP C, wind TC DL=5.0 psf, wind BC DL=5.0 psf. GCpi(+/-)=0.18

Wind loads and reactions based on MWFRS with additional C&C member design.

Right end vertical not exposed to wind pressure.

(a) Continuous lateral restraint equally spaced on member.

Bottom chord checked for 10.00 psf non-concurrent live load.

Deflection meets L/240 live and L/180 total load. Creep increase factor for dead load is 1.50.

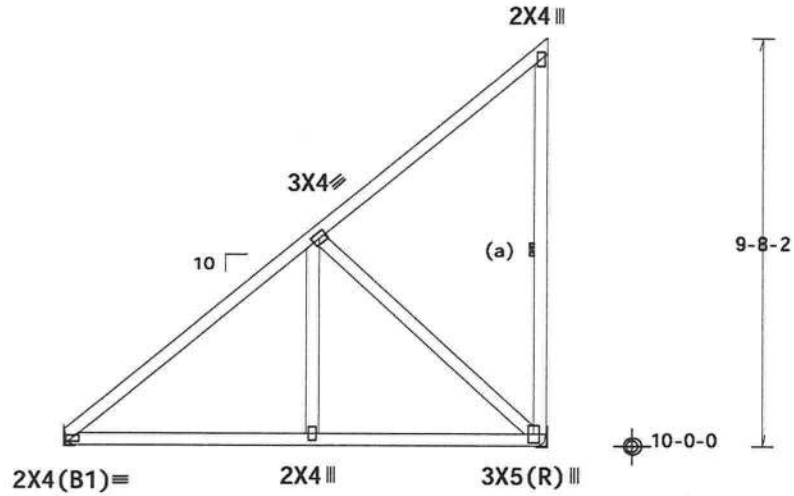

11-1-9 Over 2 Supports

R=484 U=0
RL=176/-102
H=H1

R=473 U=91
H=H2

Design Crit: FBC2014Res/TPI-2007(STD)

PLT TYP. Wave

FT/RT=20%(0%)/10(0) 16-01.00.0413.13 QTY:1 RL/-/1/-/-/R/- Scale =.25"/Ft.

DOUGLAS FLEMING LICENSE NO. 66646 STATE OF FLORIDA PROFESSIONAL ENGINEER

ALPINE AN ITW COMPANY

2400 Lake Orange Dr., Suite 150
Orlando, FL 32837
FL COA #0278

WARNING! READ AND FOLLOW ALL NOTES ON THIS DRAWING!
IMPORTANT FURNISH THIS DRAWING TO ALL CONTRACTORS INCLUDING THE INSTALLERS.

Trusses require extreme care in fabricating, handling, shipping, installing and bracing. Refer to and follow the latest edition of BCSI (Building Component Safety Information, by TPI and WTCA) for safety practices prior to performing these functions. Installers shall provide temporary bracing per BCSI. Unless noted otherwise, top chord shall have properly attached structural sheathing and bottom chord shall have a properly attached rigid ceiling. Locations shown for permanent lateral restraint of webs shall have bracing installed per BCSI sections B3, B7 or B10, as applicable. Apply plates to each face of truss and position as shown above and as the Joint Details, unless noted otherwise. Refer to drawings 160A-Z for standard plate positions.

Alpine, a division of ITW Building Components Group Inc. shall not be responsible for any deviation from this drawing, any failure to build the truss in conformance with ANSI/TPI 1, or for handling, shipping, installation & bracing of trusses.

A seal on this drawing or cover page listing this drawing, indicates acceptance of professional engineering responsibility solely for the design shown. The suitability and use of this drawing for any structure is the responsibility of the Building Designer per ANSI/TPI 1 Sec.2.

For more information see this job's general notes page and these web sites:
ALPINE: www.alpineitw.com; TPI: www.tpinst.org; WTCA: www.sbcindustry.com; ICC: www.iccsafe.org

TC LL	20.0 PSF	REF	R215-- 83896
TC DL	10.0 PSF	DATE	01/19/17
BC DL	10.0 PSF	DRW	HCUSR215 17019063
BC LL	0.0 PSF		HC-ENG KD/DF
TOT.LD.	40.0 PSF	SEQN-	455402
DUR.FAC.	1.25	FROM	CDM
SPACING	24.0"	JREF-	1VXM215_Z04

01/20/2017

(16-0982-/HUBBART RESIDENCE /SPARKS CONST. -- , FL - K06)

THIS DWG PREPARED FROM COMPUTER INPUT (LOADS & DIMENSIONS) SUBMITTED BY TRUSS MFR.

Top chord 2x4 SP M-31
Bot chord 2x4 SP M-31
Webs 2x4 SP M-31

H = recommended connection based on manufacturer tested capacities and calculations. Conditions may exist that require different connections than indicated. Refer to manufacturer publication for additional information.

These support conditions used at bearings indicated
(H1) = LSU26 w/ (2)2x6 SP M-31 supporting member.
(6) 0.148"x3" nails into supporting member,
(5) 0.148"x1.5" nails into supported member.

Bottom chord checked for 10.00 psf non-concurrent live load.

MWFRS loads based on trusses located at least 31.74 ft. from roof edge.

130 mph wind, 15.87 ft mean hgt, ASCE 7-10, CLOSED bldg, not located within 9.00 ft from roof edge, RISK CAT II, EXP C, wind TC DL=5.0 psf, wind BC DL=5.0 psf. GCpi(+/-)=0.18

Wind loads and reactions based on MWFRS with additional C&C member design.

Right end vertical not exposed to wind pressure.

(a) Continuous lateral restraint equally spaced on member.

Deflection meets L/240 live and L/180 total load. Creep increase factor for dead load is 1.50.

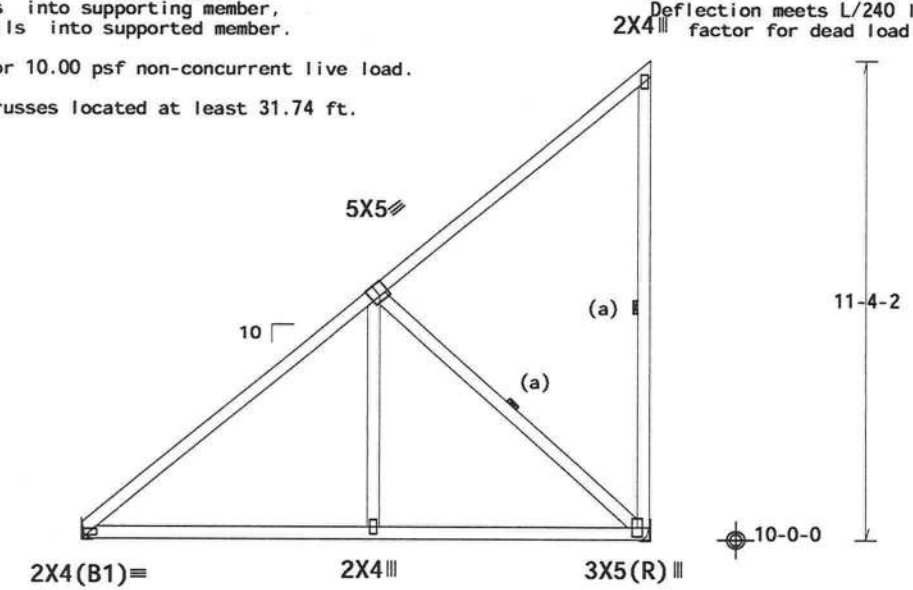

13-1-9 Over 2 Supports

R=570 U=0
RL=210/-120
H=H1

R=559 U=110
H=H2

Design Crit: FBC2014Res/TPI-2007(STD)
FT/RT=20%(0%)/10(0)

PLT TYP. Wave

16-01.00.0413.17 QTY:1 LL/-/1/-/-/R/- Scale =.25"/Ft.

ALPINE™ AN ITW COMPANY

2400 Lake Orange Dr., Suite 150
Orlando, FL 32837
FL COA #0278

WARNING! READ AND FOLLOW ALL NOTES ON THIS DRAWING!
IMPORTANT FURNISH THIS DRAWING TO ALL CONTRACTORS INCLUDING THE INSTALLERS.

Trusses require extreme care in fabricating, handling, shipping, installing and bracing. Refer to and follow the latest edition of BCSI (Building Component Safety Information, by TPI and WTCA) for safety practices prior to performing these functions. Installers shall provide temporary bracing per BCSI. Unless noted otherwise, top chord shall have properly attached structural sheathing and bottom chord shall have a properly attached rigid ceiling. Locations shown for permanent lateral restraint of webs shall have bracing installed per BCSI sections B3, B7 or B10, as applicable. Apply plates to each face of truss and position as shown above and/or the Joint Details, unless noted otherwise. Refer to drawings 160A-Z for standard plate positions.

Alpine, a division of ITW Building Components Group Inc. shall not be responsible for any deviation from this drawing, any failure to build the truss in conformance with ANSI/TPI 1, or for handling, shipping, installation & bracing of trusses.

A seal on this drawing or cover page listing this drawing, indicates acceptance of professional engineering responsibility solely for the design shown. The suitability and use of this drawing for any structure is the responsibility of the Building Designer per ANSI/TPI 1 Sec.2.

For more information see this job's general notes page and these web sites:
ALPINE: www.alpineitw.com; TPI: www.tpinst.org; WTCA: www.sbcindustry.com; ICC: www.iccsafe.org

DOUGLAS FLEMING LICENSE No. 66648 STATE OF FLORIDA PROFESSIONAL ENGINEER

TC LL	20.0 PSF	REF	R215-- 83897
TC DL	10.0 PSF	DATE	01/19/17
BC DL	10.0 PSF	DRW	HCUSR215 17019064
BC LL	0.0 PSF	HC-ENG	KD/DF
TOT.LD.	40.0 PSF	SEQN-	455394
DUR.FAC.	1.25	FROM	CDM
SPACING	24.0"	JREF-	1VXM215_Z04

01/20/2017

(16-0982-/HUBBART RESIDENCE /SPARKS CONST. -- , FL - K07)

THIS DWG PREPARED FROM COMPUTER INPUT (LOADS & DIMENSIONS) SUBMITTED BY TRUSS MFR.

Top chord 2x4 SP M-31
Bot chord 2x4 SP M-31
Webs 2x4 SP M-31

H = recommended connection based on manufacturer tested capacities and calculations. Conditions may exist that require different connections than indicated. Refer to manufacturer publication for additional information.

These support conditions used at bearings indicated
(H1) = LSU26 w/ (2)2x6 SP M-31 supporting member.
(6) 0.148"x3" nails into supporting member,
(5) 0.148"x1.5" nails into supported member.

Bottom chord checked for 10.00 psf non-concurrent live load.

Deflection meets L/240 live and L/180 total load. Creep increase factor for dead load is 1.50.

MWFRS loads based on trusses located at least 31.40 ft. from roof edge.

130 mph wind, 15.70 ft mean hgt, ASCE 7-10, CLOSED bldg, not located within 9.00 ft from roof edge, RISK CAT II, EXP C, wind TC DL=5.0 psf, wind BC DL=5.0 psf. GCpi(+/-)=0.18

Wind loads and reactions based on MWFRS with additional C&C member design.

Right end vertical not exposed to wind pressure.

(a) Continuous lateral restraint equally spaced on member.

In lieu of structural panels use purlins to brace all flat TC @ 24" OC.

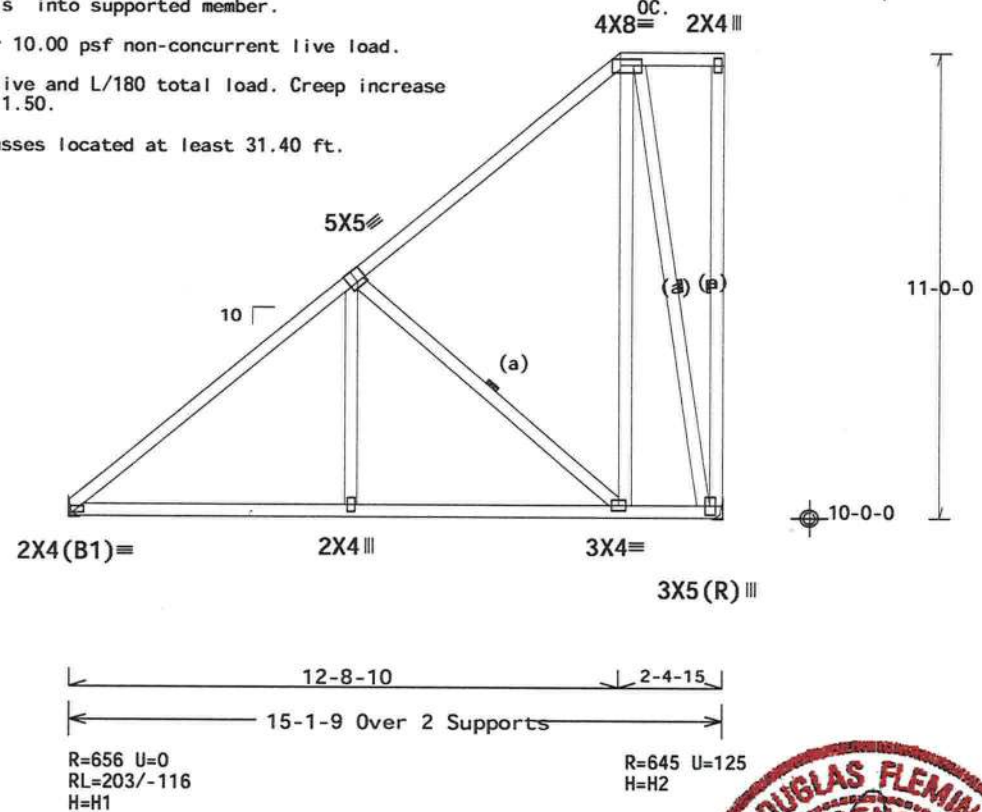

Design Crit: FBC2014Res/TPI-2007(STD)
FT/RT=20%(0%)/10(0) 16[illegible]01.0[illegible].0413.1[illegible] QTY 1 [illegible]L/-/1/-/-/R/-

PLT TYP. Wave

Scale =.25"/Ft.

TC LL	20.0 PSF
TC DL	10.0 PSF
BC DL	10.0 PSF
BC LL	0.0 PSF
TOT.LD.	40.0 PSF
DUR.FAC.	1.25
SPACING	24.0"

REF	R215-- 83898
DATE	01/19/17
DRW	HCUSR215 17019065
	HC-ENG KD/DF
SEQN-	455392
FROM	CDM
JREF-	1VXM215_Z04

DOUGLAS FLEMING LICENSE No. 66848 STATE OF FLORIDA PROFESSIONAL ENGINEER

ALPINE™ AN ITW COMPANY
2400 Lake Orange Dr., Suite 150
Orlando, FL 32837
FL COA #0278

WARNING! READ AND FOLLOW ALL NOTES ON THIS DRAWING!
IMPORTANT FURNISH THIS DRAWING TO ALL CONTRACTORS INCLUDING THE INSTALLERS.

Trusses require extreme care in fabricating, handling, shipping, installing and bracing. Refer to and follow the latest edition of BCSI (Building Component Safety Information, by TPI and WTCA) for safety practices pertinent to performing these functions. Installers shall provide temporary bracing per BCSI. Unless noted otherwise, top chord shall have properly attached structural sheathing and bottom chord shall have a properly attached rigid ceiling. Locations shown for permanent lateral restraint of webs shall have bracing installed per BCSI sections B3, B7 or B10, as applicable. Apply plates to each face of truss and position as shown above and/or the Joint Details, unless noted otherwise. Refer to drawings 160A-Z for standard plate positions.

Alpine, a division of ITW Building Components Group Inc. shall not be responsible for any deviation from this drawing, any failure to build the truss in conformance with ANSI/TPI 1, or for handling, shipping, installation & bracing of trusses.

A seal on this drawing or cover page listing this drawing, indicates acceptance of professional engineering responsibility solely for the design shown. The suitability and use of this drawing for any structure is the responsibility of the Building Designer per ANSI/TPI 1 Sec.2.

For more information see this job's general notes page and these web sites:
ALPINE: www.alpineitw.com; TPI: www.tpinst.org; WTCA: www.sbcindustry.com; ICC: www.iccsafe.org

01/20/2017

(16-0982-/HUBBART RESIDENCE /SPARKS CONST. -- , FL - L01)

THIS DWG PREPARED FROM COMPUTER INPUT (LOADS & DIMENSIONS) SUBMITTED BY TRUSS MFR.

Top chord 2x4 SP M-31
Bot chord 2x4 SP M-31
Webs 2x4 SP M-31

See DWGS S14015ENC100815 & GBLLETIN1014 for gable wind bracing requirements.

Bottom chord checked for 10.00 psf non-concurrent live load.

130 mph wind, 15.00 ft mean hgt, ASCE 7-10, CLOSED bldg, Located anywhere in roof, RISK CAT II, EXP C, wind TC DL=5.0 psf, wind BC DL=5.0 psf. GCpi(+/-)=0.18

Wind loads and reactions based on MWFRS with additional C&C member design.

Deflection meets L/240 live and L/180 total load. Creep increase factor for dead load is 1.50.

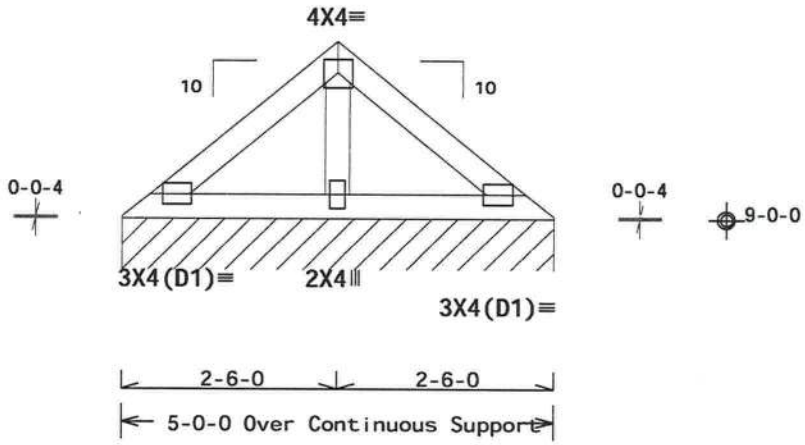

R=85 PLF U=9 PLF W=5-0-0
RL=-10 PLF

Design Crit: FBC2014Res/TPI-2007(STD)
FT/RT=20%(0%)/10(0)

PLT TYP. Wave

16[illegible]01.0[illegible].0413.1[illegible] QTY 1

[illegible]L/-/1/-/-/R/-

Scale =.5"/Ft.

TC LL	20.0 PSF	REF	R215-- 83899
TC DL	10.0 PSF	DATE	01/19/17
BC DL	10.0 PSF	DRW	HCUSR215 17019066
BC LL	0.0 PSF	HC-ENG	KD/DF
TOT.LD.	40.0 PSF	SEQN-	455413
DUR.FAC.	1.25	FROM	CDM
SPACING	24.0"	JREF-	1VXM215_Z04

ALPINE™ AN ITW COMPANY
2400 Lake Orange Dr., Suite 150
Orlando, FL 32837
FL COA #0278

DOUGLAS FLEMING LICENSE No. 66848 STATE OF FLORIDA PROFESSIONAL ENGINEER

01/20/2017

(16-0982-/HUBBART RESIDENCE /SPARKS CONST. -- , FL - L02)

THIS DWG PREPARED FROM COMPUTER INPUT (LOADS & DIMENSIONS) SUBMITTED BY TRUSS MFR.

Top chord 2x4 SP M-31
Bot chord 2x6 SP M-31
Webs 2x4 SP M-31

130 mph wind, 15.00 ft mean hgt, ASCE 7-10, CLOSED bldg, not located within 4.50 ft from roof edge, RISK CAT II, EXP C, wind TC DL=5.0 psf, wind BC DL=5.0 psf. GCpi(+/-)=0.18

Wind loads and reactions based on MWFRS.

Bottom chord checked for 10.00 psf non-concurrent live load.

Special loads
------(Lumber Dur.Fac.=1.25 / Plate Dur.Fac.=1.25)

TC- From	66 plf	at	-1.33	to	66 plf	at 0.94
TC- From	33 plf	at	0.94	to	33 plf	at 2.50
TC- From	66 plf	at	2.50	to	66 plf	at 6.33
BC- From	5 plf	at	-1.33	to	5 plf	at 0.00
BC- From	10 plf	at	0.00	to	10 plf	at 5.00
BC- From	5 plf	at	5.00	to	5 plf	at 6.33

BC- 1344.49 lb Conc. Load at 0.94, 2.94

Deflection meets L/240 live and L/180 total load. Creep increase factor for dead load is 1.50.

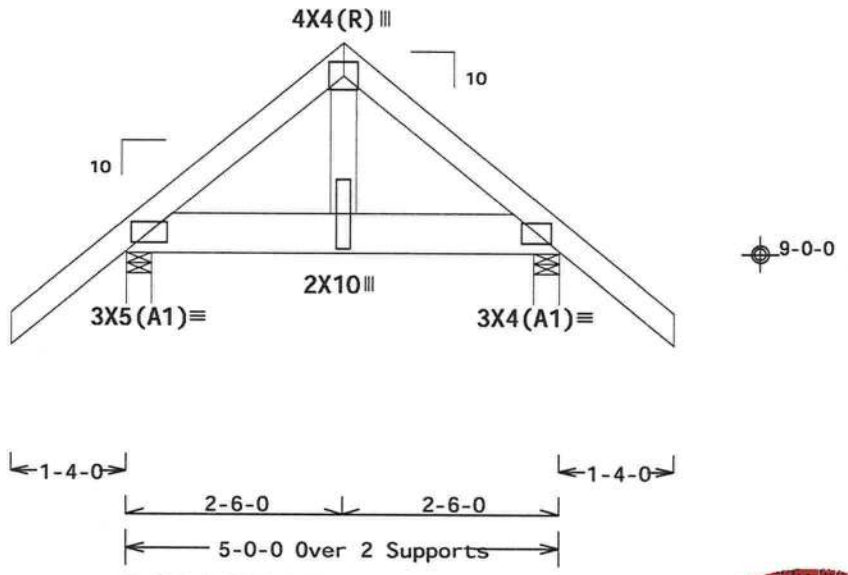

Design Crit: FBC2014Res/TPI-2007(STD)

PLT TYP. Wave — FT/RT=20%(0%)/10(0) — 16[illegible].01.0[illegible].0413.1[illegible] — QTY 11 — [illegible]L/-/1/-/-/R/- — Scale =.5"/Ft.

DOUGLAS FLEMING LICENSE No. 66848 STATE OF FLORIDA PROFESSIONAL ENGINEER

ALPINE AN ITW COMPANY
2400 Lake Orange Dr., Suite 150
Orlando, FL 32837
FL COA #0278

WARNING! READ AND FOLLOW ALL NOTES ON THIS DRAWING!
IMPORTANT FURNISH THIS DRAWING TO ALL CONTRACTORS INCLUDING THE INSTALLERS.

Trusses require extreme care in fabricating, handling, shipping, installing and bracing. Refer to and follow the latest edition of BCSI (Building Component Safety Information, by TPI and WTCA) for safety practices in performing these functions. Installers shall provide temporary bracing per BCSI. Unless noted otherwise, top chord shall have properly attached structural sheathing and bottom chord shall have a properly attached rigid ceiling. Locations shown for permanent lateral restraint of webs shall have bracing installed per BCSI sections B3, B7 or B10, as applicable. Apply plates to each face of truss and position as shown above and/or the Joint Details, unless noted otherwise. Refer to drawings 160A-Z for standard plate positions.

Alpine, a division of ITW Building Components Group Inc. shall not be responsible for any deviation from this drawing, any failure to build the truss in conformance with ANSI/TPI 1, or for handling, shipping, installation & bracing of trusses.

A seal on this drawing or cover page listing this drawing, indicates acceptance of professional engineering responsibility solely for the design shown. The suitability and use of this drawing for any structure is the responsibility of the Building Designer per ANSI/TPI 1 Sec.2.

For more information see this job's general notes page and these web sites:
ALPINE: www.alpineitw.com; TPI: www.tpinst.org; WTCA: www.sbcindustry.com; ICC: www.iccsafe.org

TC LL	20.0 PSF	REF R215-- 83900
TC DL	10.0 PSF	DATE 01/19/17
BC DL	10.0 PSF	DRW HCUSR215 17019141
BC LL	0.0 PSF	HC-ENG KD/DF
TOT.LD.	40.0 PSF	SEQN- 455447
DUR.FAC.	1.25	FROM CDM
SPACING	24.0"	JREF- 1VXM215_Z04

(16-0982-/HUBBART RESIDENCE /SPARKS CONST. -- , FL - P01)

THIS DWG PREPARED FROM COMPUTER INPUT (LOADS & DIMENSIONS) SUBMITTED BY TRUSS MFR.

Top chord 2x4 SP M-31
Bot chord 2x4 SP M-31
Webs 2x4 SP M-31

In lieu of structural panels use purlins to brace all flat TC @ 24" OC.

Bottom chord checked for 10.00 psf non-concurrent live load.

MWFRS loads based on trusses located at least 10.62 ft. from roof edge.

Refer to DWG PB160101014 FOR PIGGYBACK DETAILS.

130 mph wind, 21.24 ft mean hgt, ASCE 7-10, CLOSED bldg, Located anywhere in roof, RISK CAT II, EXP C, wind TC DL=5.0 psf, wind BC DL=5.0 psf. GCpi(+/-)=0.18

Wind loads and reactions based on MWFRS with additional C&C member design.

Deflection meets L/240 live and L/180 total load. Creep increase factor for dead load is 1.50.

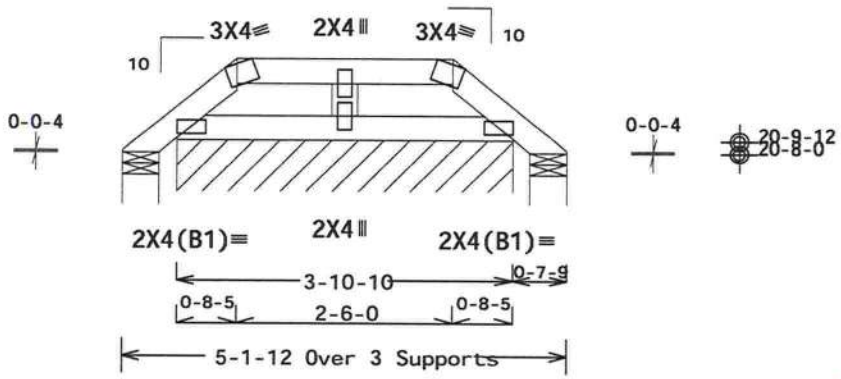

R=21 Rw=32 U=15 W=5.167" R=21 U=6 W=5.167"
RL=29/-29
R=94 PLF U=15 PLF W=3-10-10

Design Crit: FBC2014Res/TPI-2007(STD)
FT/RT=20%(0%)/10(0) 16.01.09.0418 17066498 TY:1 FT/-/1/-/-/R/-

PLT TYP. Wave

Scale =.5"/Ft.

ALPINE AN ITW COMPANY
2400 Lake Orange Dr., Suite 150
Orlando, FL 32837
FL COA #0278

WARNING! READ AND FOLLOW ALL NOTES ON THIS DRAWING!
IMPORTANT FURNISH THIS DRAWING TO ALL CONTRACTORS INCLUDING THE INSTALLERS.

Trusses require extreme care in fabricating, handling, shipping, installing and bracing. Refer to and follow the latest edition of BCSI (Building Component Safety Information, by TPI and WTCA) for safety practices pr to performing these functions. Installers shall provide temporary bracing per BCSI. Unless noted otherwise, top chord shall have properly attached structural sheathing and bottom chord shall have a properly attached rigid ceiling. Locations shown for permanent lateral restraint of webs shall have bracing installed per BCSI sections B3, B7 or B10, as applicable. Apply plates to each face of truss and position as shown above and on the Joint Details, unless noted otherwise. Refer to drawings 160A-Z for standard plate positions.

Alpine, a division of ITW Building Components Group Inc. shall not be responsible for any deviation from this drawing, any failure to build the truss in conformance with ANSI/TPI 1, or for handling, shipping, installation & bracing of trusses.

A seal on this drawing or cover page listing this drawing, indicates acceptance of professional engineering responsibility solely for the design shown. The suitability and use of this drawing for any structure is the responsibility of the Building Designer per ANSI/TPI 1 Sec.2.

For more information see this job's general notes page and these web sites:
ALPINE: www.alpineitw.com; TPI: www.tpinst.org; WTCA: www.sbcindustry.com; ICC: www.iccsafe.org

DOUGLAS FLEMING LICENSE No. 66649 STATE OF FLORIDA PROFESSIONAL ENGINEER

TC LL	20.0 PSF	REF R215-- 83901
TC DL	10.0 PSF	DATE 01/19/17
BC DL	10.0 PSF	DRW HCUSR215 17019076
BC LL	0.0 PSF	HC-ENG KD/DF
TOT.LD.	40.0 PSF	SEQN- 455408
DUR.FAC.	1.25	FROM CDM
SPACING	24.0"	JREF- 1VXM215_Z04

01/20/2017

(16-0982-/HUBBART RESIDENCE /SPARKS CONST. -- , FL - P02)

THIS DWG PREPARED FROM COMPUTER INPUT (LOADS & DIMENSIONS) SUBMITTED BY TRUSS MFR.

Top chord 2x4 SP M-31
Bot chord 2x4 SP M-31
Webs 2x4 SP M-31

Bottom chord checked for 10.00 psf non-concurrent live load.

Deflection meets L/240 live and L/180 total load. Creep increase factor for dead load is 1.50.

Refer to DWG PB160101014 FOR PIGGYBACK DETAILS.

130 mph wind, 21.76 ft mean hgt, ASCE 7-10, CLOSED bldg, Located anywhere in roof, RISK CAT II, EXP C, wind TC DL=5.0 psf, wind BC DL=5.0 psf. GCpi(+/-)=0.18

Wind loads and reactions based on MWFRS with additional C&C member design.

MWFRS loads based on trusses located at least 10.88 ft. from roof edge.

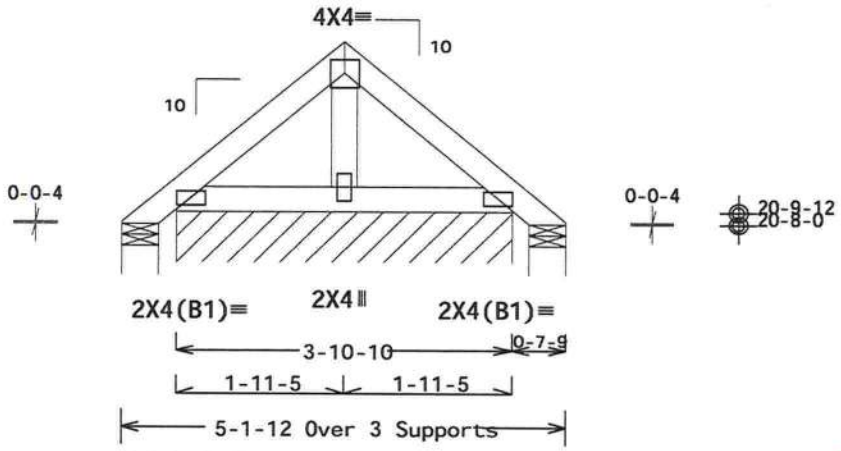

R=9 Rw=55 U=45 W=5.167" R=9 Rw=14 U=3 W=5.167"
RL=61/-61
R=103 PLF U=16 PLF W=3-10-10

Design Crit: FBC2014Res/TPI-2007(STD)

PLT TYP. Wave FT/RT=20%(0%)/10(0) 16.01.00.0416 QTY:4 FT/-/1/-/-/R/- Scale =.5"/Ft.

DOUGLAS FLEMING LICENSE No. 66649 STATE OF FLORIDA PROFESSIONAL ENGINEER

ALPINE AN ITW COMPANY

2400 Lake Orange Dr., Suite 150
Orlando, FL 32837
FL COA #0278

WARNING! READ AND FOLLOW ALL NOTES ON THIS DRAWING!
IMPORTANT FURNISH THIS DRAWING TO ALL CONTRACTORS INCLUDING THE INSTALLERS.

Trusses require extreme care in fabricating, handling, shipping, installing and bracing. Refer to and follow the latest edition of BCSI (Building Component Safety Information, by TPI and WTCA) for safety practices pri to performing these functions. Installers shall provide temporary bracing per BCSI. Unless noted otherwise, top chord shall have properly attached structural sheathing and bottom chord shall have a properly attached rigid ceiling. Locations shown for permanent lateral restraint of webs shall have bracing installed per BCSI sections B3, B7 or B10, as applicable. Apply plates to each face of truss and position as shown above and on the Joint Details, unless noted otherwise. Refer to drawings 160A-Z for standard plate positions.

Alpine, a division of ITW Building Components Group Inc. shall not be responsible for any deviation from this drawing, any failure to build the truss in conformance with ANSI/TPI 1, or for handling, shipping, installation & bracing of trusses.

A seal on this drawing or cover page listing this drawing, indicates acceptance of professional engineering responsibility solely for the design shown. The suitability and use of this drawing for any structure is the responsibility of the Building Designer per ANSI/TPI 1 Sec.2.

For more information see this job's general notes page and these web sites:
ALPINE: www.alpineitw.com; TPI: www.tpinst.org; WTCA: www.sbcindustry.com; ICC: www.iccsafe.org

TC LL	20.0 PSF	REF R215-- 83902
TC DL	10.0 PSF	DATE 01/19/17
BC DL	10.0 PSF	DRW HCUSR215 17019077
BC LL	0.0 PSF	HC-ENG KD/DF
TOT.LD.	40.0 PSF	SEQN- 455407
DUR.FAC.	1.25	FROM CDM
SPACING	24.0"	JREF- 1VXM215_Z04

01/20/2017

(16-0982-/HUBBART RESIDENCE /SPARKS CONST. -- , FL - P03)

THIS DWG PREPARED FROM COMPUTER INPUT (LOADS & DIMENSIONS) SUBMITTED BY TRUSS MFR.

Top chord 2x4 SP M-31
Bot chord 2x4 SP M-31
Webs 2x4 SP M-31

Left end vertical not exposed to wind pressure.

In lieu of structural panels use purlins to brace all flat TC @ 24" OC.

Deflection meets L/240 live and L/180 total load. Creep increase factor for dead load is 1.50.

Refer to DWG PB160101014 FOR PIGGYBACK DETAILS.

130 mph wind, 20.30 ft mean hgt, ASCE 7-10, CLOSED bldg, not located within 9.00 ft from roof edge, RISK CAT II, EXP C, wind TC DL=5.0 psf, wind BC DL=5.0 psf. GCpi(+/-)=0.18

Wind loads and reactions based on MWFRS with additional C&C member design.

Bottom chord checked for 10.00 psf non-concurrent live load.

MWFRS loads based on trusses located at least 10.15 ft. from roof edge.

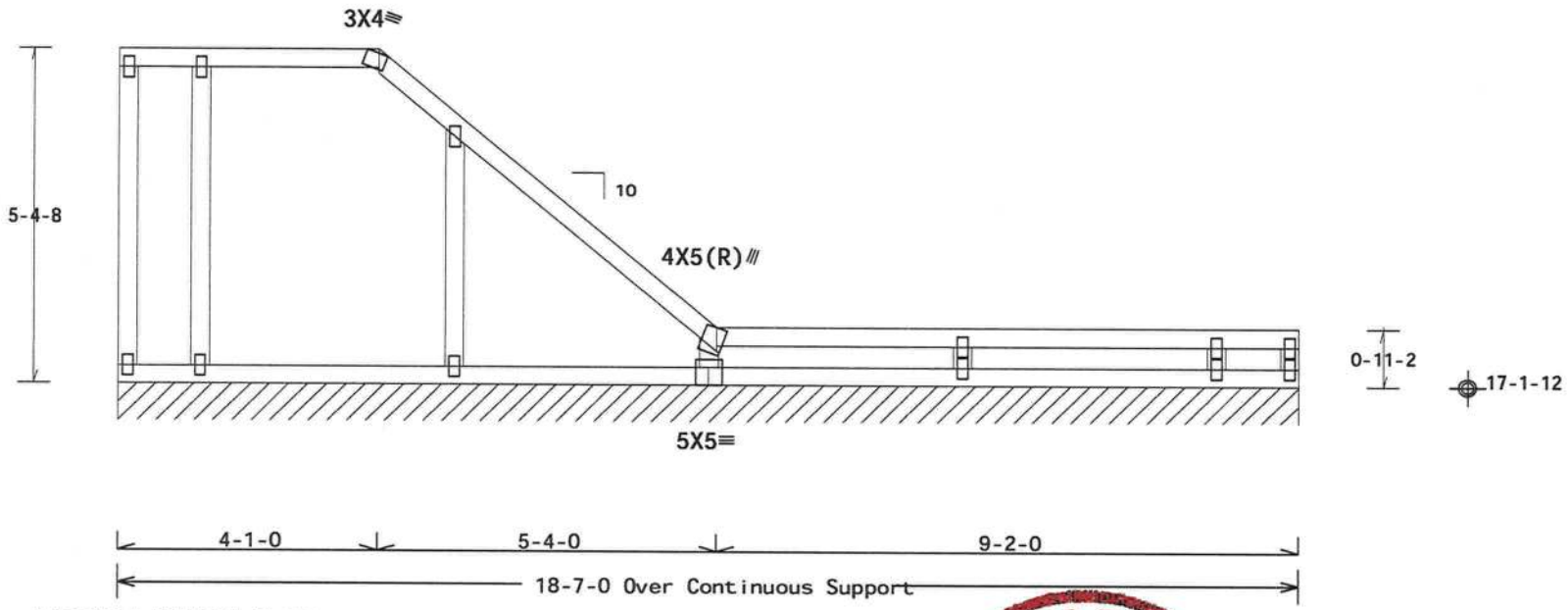

R=86 PLF U=17 PLF W=18-7-0
RL=2/-7 PLF

Note: All Plates Are 2X4 Except As Shown.

Design Crit: FBC2014Res/TPI-2007(STD)

PLT TYP. Wave FT/RT=20%(0%)/10(0) 16.01.09.0418.17 QTY: 2 F5/-/1/-/-/R/- Scale =.375"/Ft.

ALPINE
AN ITW COMPANY
2400 Lake Orange Dr., Suite 150
Orlando, FL 32837
FL COA #0278

WARNING! READ AND FOLLOW ALL NOTES ON THIS DRAWING!
IMPORTANT FURNISH THIS DRAWING TO ALL CONTRACTORS INCLUDING THE INSTALLERS.

Trusses require extreme care in fabricating, handling, shipping, installing and bracing. Refer to and follow the latest edition of BCSI (Building Component Safety Information, by TPI and WTCA) for safety practices pertinent to performing these functions. Installers shall provide temporary bracing per BCSI. Unless noted otherwise, top chord shall have properly attached structural sheathing and bottom chord shall have a properly attached rigid ceiling. Locations shown for permanent lateral restraint of webs shall have bracing installed per BCSI sections B3, B7 or B10, as applicable. Apply plates to each face of truss and position as shown above and on the Joint Details, unless noted otherwise. Refer to drawings 160A-Z for standard plate positions.

Alpine, a division of ITW Building Components Group Inc. shall not be responsible for any deviation from this drawing, any failure to build the truss in conformance with ANSI/TPI 1, or for handling, shipping, installation & bracing of trusses.

A seal on this drawing or cover page listing this drawing, indicates acceptance of professional engineering responsibility solely for the design shown. The suitability and use of this drawing for any structure is the responsibility of the Building Designer per ANSI/TPI 1 Sec.2.

For more information see this job's general notes page and these web sites:
ALPINE: www.alpineitw.com; TPI: www.tpinst.org; WTCA: www.sbcindustry.com; ICC: www.iccsafe.org

DOUGLAS FLEMING LICENSE No. 66848 STATE OF FLORIDA PROFESSIONAL ENGINEER

TC LL	20.0 PSF	REF R215-- 83903
TC DL	10.0 PSF	DATE 01/19/17
BC DL	10.0 PSF	DRW HCUSR215 17019078
BC LL	0.0 PSF	HC-ENG KD/DF
TOT.LD.	40.0 PSF	SEQN- 455385
DUR.FAC.	1.25	FROM CDM
SPACING	24.0"	JREF- 1VXM215_Z04

01/20/2017

(16-0982-/HUBBART RESIDENCE /SPARKS CONST. -- , FL - P04)

THIS DWG PREPARED FROM COMPUTER INPUT (LOADS & DIMENSIONS) SUBMITTED BY TRUSS MFR.

Top chord 2x4 SP M-31
Bot chord 2x4 SP M-31
Webs 2x4 SP M-31

End verticals not exposed to wind pressure.

Calculated horizontal deflection is 0.19" due to live load and 0.21" due to dead load.

Bottom chord checked for 10.00 psf non-concurrent live load.

MWFRS loads based on trusses located at least 10.88 ft. from roof edge.

Refer to DWG PB160101014 FOR PIGGYBACK DETAILS.

130 mph wind, 21.75 ft mean hgt, ASCE 7-10, CLOSED bldg, not located within 9.00 ft from roof edge, RISK CAT II, EXP C, wind TC DL=5.0 psf, wind BC DL=5.0 psf. GCpi(+/-)=0.18

Wind loads and reactions based on MWFRS with additional C&C member design.

In lieu of structural panels use purlins to brace all flat TC @ 24" OC.

Deflection meets L/240 live and L/180 total load. Creep increase factor for dead load is 1.50.

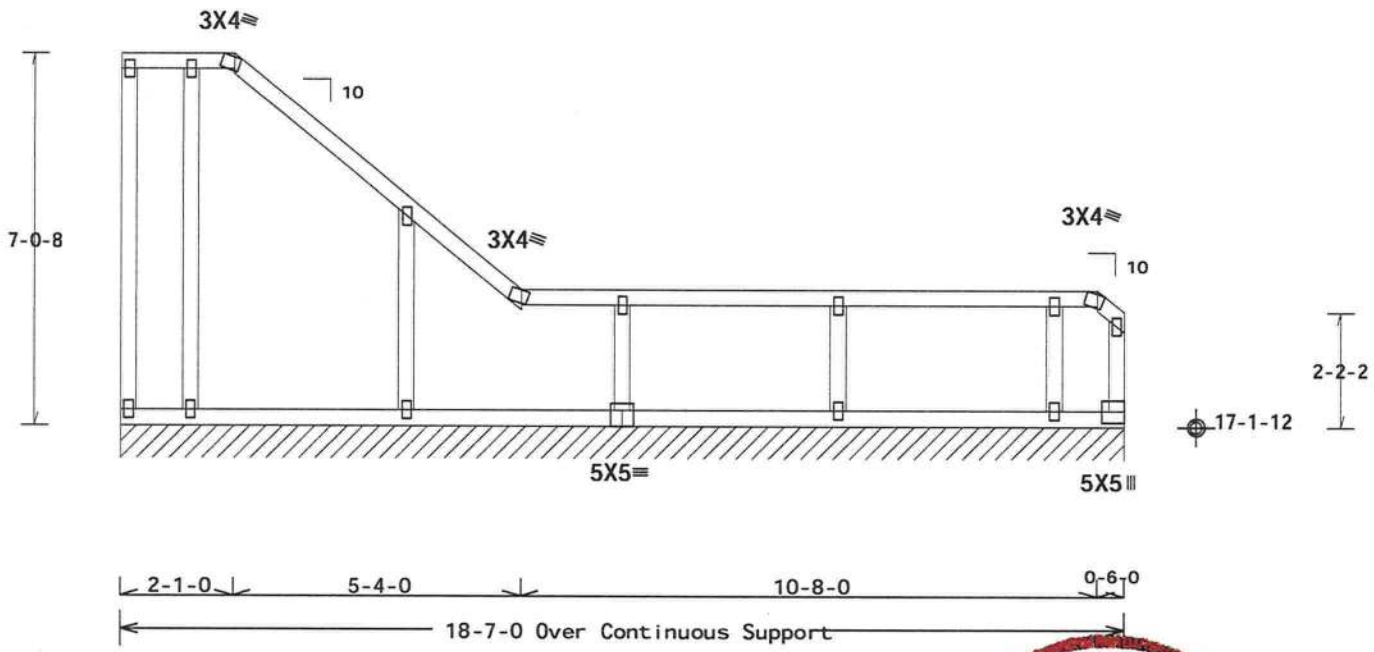

R=86 PLF U=18 PLF W=18-7-0
RL=3/-7 PLF

Note: All Plates Are 2X4 Except As Shown.

Design Crit: FBC2014Res/TPI-2007(STD)

PLT TYP. Wave FT/RT=20%(0%)/10(0) 16.01.09.0418.17 QTY: 2 F5/-/1/-/-/R/- Scale =.3125"/Ft.

ALPINE AN ITW COMPANY
2400 Lake Orange Dr., Suite 150
Orlando, FL 32837
FL COA #0278

WARNING! READ AND FOLLOW ALL NOTES ON THIS DRAWING!
IMPORTANT FURNISH THIS DRAWING TO ALL CONTRACTORS INCLUDING THE INSTALLERS.

Trusses require extreme care in fabricating, handling, shipping, installing and bracing. Refer to and follow the latest edition of BCSI (Building Component Safety Information, by TPI and WTCA) for safety practices pertinent to performing these functions. Installers shall provide temporary bracing per BCSI. Unless noted otherwise, top chord shall have properly attached structural sheathing and bottom chord shall have a properly attached rigid ceiling. Locations shown for permanent lateral restraint of webs shall have bracing installed per BCSI sections B3, B7 or B10, as applicable. Apply plates to each face of truss and position as shown above and on the Joint Details, unless noted otherwise. Refer to drawings 160A-Z for standard plate positions.

Alpine, a division of ITW Building Components Group Inc. shall not be responsible for any deviation from this drawing, any failure to build the truss in conformance with ANSI/TPI 1, or for handling, shipping, installation & bracing of trusses.

A seal on this drawing or cover page listing this drawing, indicates acceptance of professional engineering responsibility solely for the design shown. The suitability and use of this drawing for any structure is the responsibility of the Building Designer per ANSI/TPI 1 Sec.2.

For more information see this job's general notes page and these web sites:
ALPINE: www.alpineitw.com; TPI: www.tpinst.org; WTCA: www.sbcindustry.com; ICC: www.iccsafe.org

DOUGLAS FLEMING LICENSE No. 66848 STATE OF FLORIDA PROFESSIONAL ENGINEER

TC LL	20.0 PSF	REF R215-- 83904
TC DL	10.0 PSF	DATE 01/19/17
BC DL	10.0 PSF	DRW HCUSR215 17019079
BC LL	0.0 PSF	HC-ENG KD/DF
TOT.LD.	40.0 PSF	SEQN- 455384
DUR.FAC.	1.25	FROM CDM
SPACING	24.0"	JREF- 1VXM215_Z04

01/20/2017

(16-0982-/HUBBART RESIDENCE /SPARKS CONST. -- , FL - P05)

THIS DWG PREPARED FROM COMPUTER INPUT (LOADS & DIMENSIONS) SUBMITTED BY TRUSS MFR.

Top chord 2x4 SP M-31
Bot chord 2x4 SP M-31
Webs 2x4 SP M-31

End verticals not exposed to wind pressure.

Calculated horizontal deflection is 0.37" due to live load and 0.41" due to dead load.

In lieu of structural panels use purlins to brace all flat TC @ 24" OC.

Deflection meets L/240 live and L/180 total load. Creep increase factor for dead load is 1.50.

(**) 1 plate(s) require special positioning. Refer to scaled plate plot details for special positioning requirements.

130 mph wind, 22.78 ft mean hgt, ASCE 7-10, CLOSED bldg, not located within 9.00 ft from roof edge, RISK CAT II, EXP C, wind TC DL=5.0 psf, wind BC DL=5.0 psf. GCpi(+/-)=0.18

Wind loads and reactions based on MWFRS with additional C&C member design.

Bottom chord checked for 10.00 psf non-concurrent live load.

MWFRS loads based on trusses located at least 11.39 ft. from roof edge.

Refer to DWG PB160101014 FOR PIGGYBACK DETAILS.

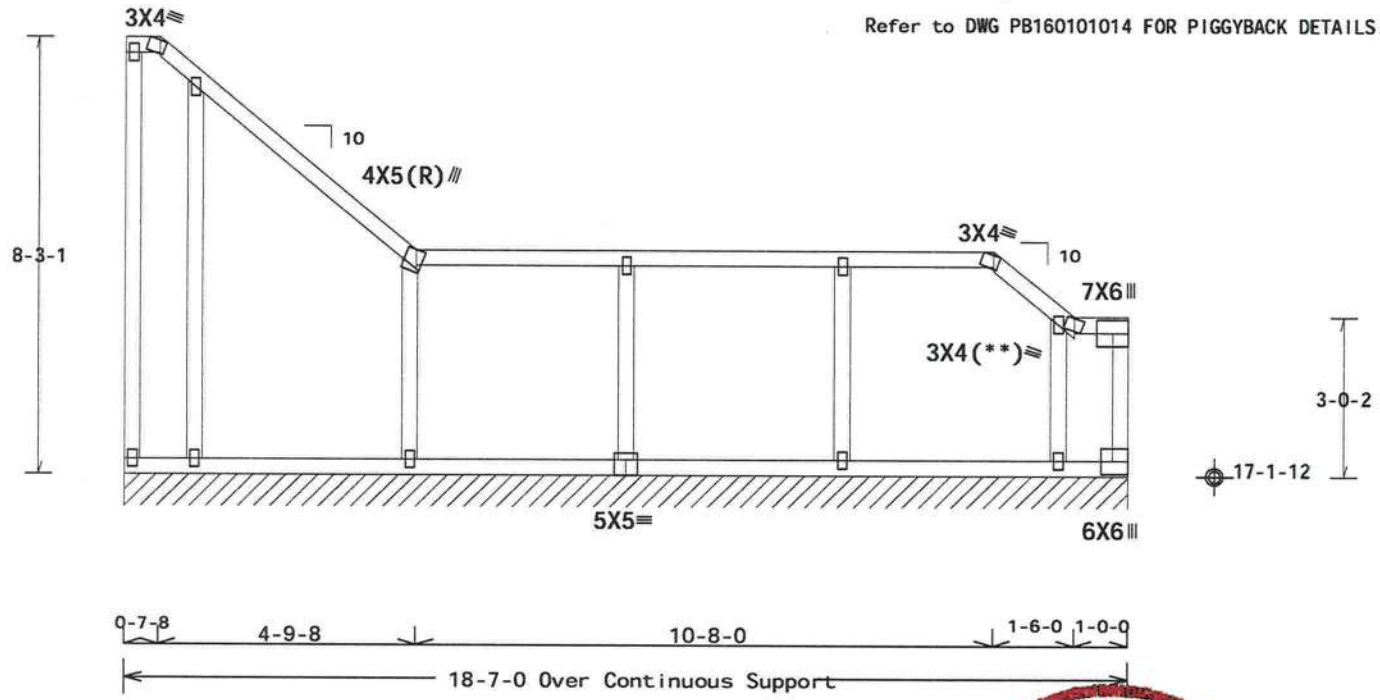

R=86 PLF U=18 PLF W=18-7-0
RL=3/-8 PLF

Note: All Plates Are 2X4 Except As Shown.

Design Crit: FBC2014Res/TPI-2007(STD)

PLT TYP. Wave FT/RT=20%(0%)/10(0) 16.1.00.0418.1 QTY: 2 F/-/1/-/-/R/- Scale =.3125"/Ft.

DOUGLAS FLEMING LICENSE No. 66848 STATE OF FLORIDA PROFESSIONAL ENGINEER

ALPINE AN ITW COMPANY
2400 Lake Orange Dr., Suite 150
Orlando, FL 32837
FL COA #0278

WARNING! READ AND FOLLOW ALL NOTES ON THIS DRAWING!
IMPORTANT FURNISH THIS DRAWING TO ALL CONTRACTORS INCLUDING THE INSTALLERS.

Trusses require extreme care in fabricating, handling, shipping, installing and bracing. Refer to and follow the latest edition of BCSI (Building Component Safety Information, by TPI and WTCA) for safety practices pr to performing these functions. Installers shall provide temporary bracing per BCSI. Unless noted otherwise top chord shall have properly attached structural sheathing and bottom chord shall have a properly attached rigid ceiling. Locations shown for permanent lateral restraint of webs shall have bracing installed per BCSI sections B3, B7 or B10, as applicable. Apply plates to each face of truss and position as shown above and on the Joint Details, unless noted otherwise. Refer to drawings 160A-Z for standard plate positions.

Alpine, a division of ITW Building Components Group Inc. shall not be responsible for any deviation from this drawing, any failure to build the truss in conformance with ANSI/TPI 1, or for handling, shipping, installation & bracing of trusses.

A seal on this drawing or cover page listing this drawing, indicates acceptance of professional engineering responsibility solely for the design shown. The suitability and use of this drawing for any structure is the responsibility of the Building Designer per ANSI/TPI 1 Sec.2.

For more information see this job's general notes page and these web sites:
ALPINE: www.alpineitw.com; TPI: www.tpinst.org; WTCA: www.sbcindustry.com; ICC: www.iccsafe.org

TC LL	20.0 PSF	REF R215-- 83905
TC DL	10.0 PSF	DATE 01/19/17
BC DL	10.0 PSF	DRW HCUSR215 17019080
BC LL	0.0 PSF	HC-ENG KD/DF
TOT.LD.	40.0 PSF	SEQN- 455387
DUR.FAC.	1.25	FROM CDM
SPACING	24.0"	JREF- 1VXM215_Z04

01/20/2017

(16-0982-/HUBBART RESIDENCE /SPARKS CONST. -- , FL - P06)

THIS DWG PREPARED FROM COMPUTER INPUT (LOADS & DIMENSIONS) SUBMITTED BY TRUSS MFR.

Top chord 2x4 SP M-31
Bot chord 2x4 SP M-31
Webs 2x4 SP M-31

End verticals not exposed to wind pressure.

In lieu of structural panels use purlins to brace all flat TC @ 24" OC.

Deflection meets L/240 live and L/180 total load. Creep increase factor for dead load is 1.50.

Refer to DWG PB160101014 FOR PIGGYBACK DETAILS.

130 mph wind, 22.78 ft mean hgt, ASCE 7-10, CLOSED bldg, not located within 9.00 ft from roof edge, RISK CAT II, EXP C, wind TC DL=5.0 psf, wind BC DL=5.0 psf. GCpi(+/-)=0.18

Wind loads and reactions based on MWFRS with additional C&C member design.

Bottom chord checked for 10.00 psf non-concurrent live load.

MWFRS loads based on trusses located at least 11.39 ft. from roof edge.

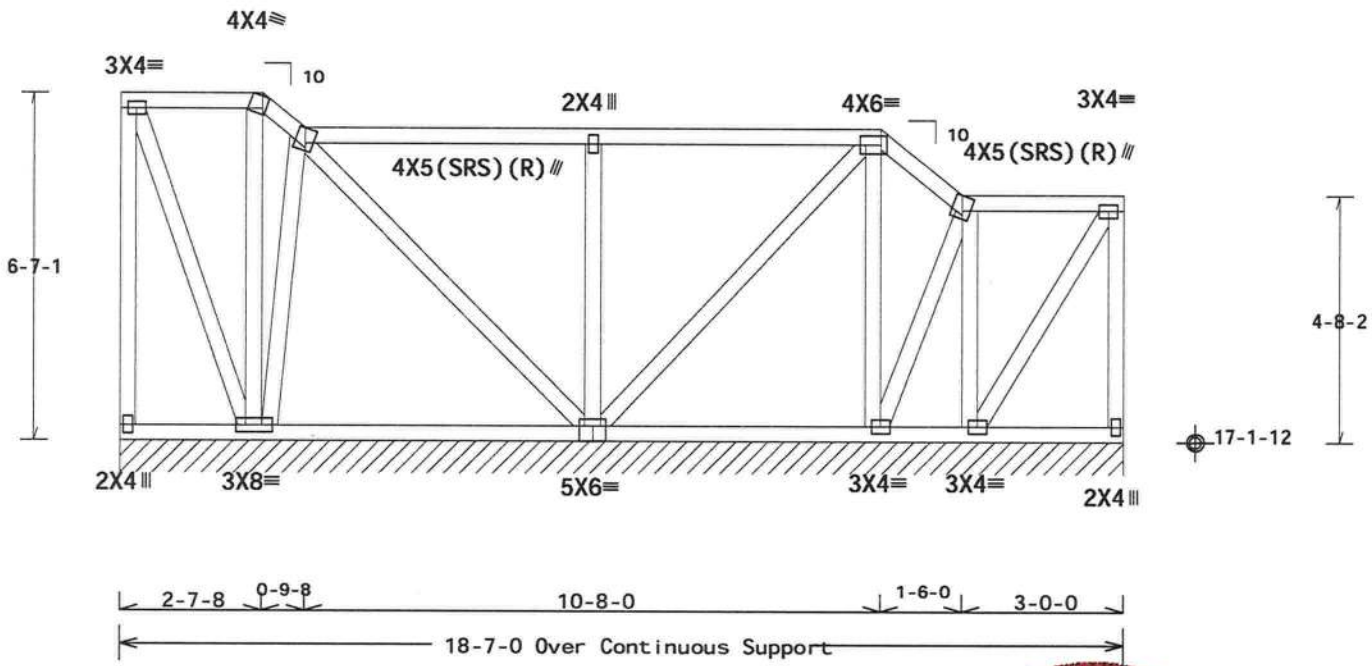

R=86 PLF U=21 PLF W=18-7-0
RL=-3 PLF

Design Crit: FBC2014Res/TPI-2007(STD)
FT/RT=20%(0%)/10(0)

PLT TYP. Wave

16-01.04.0413.17 QTY 1 L/-/1/-/-/R/- Scale =.3125"/Ft.

ALPINE™ AN ITW COMPANY
2400 Lake Orange Dr., Suite 150
Orlando, FL 32837
FL COA #0278

WARNING! READ AND FOLLOW ALL NOTES ON THIS DRAWING!
IMPORTANT FURNISH THIS DRAWING TO ALL CONTRACTORS INCLUDING THE INSTALLERS.

Trusses require extreme care in fabricating, handling, shipping, installing and bracing. Refer to and follow the latest edition of BCSI (Building Component Safety Information, by TPI and WTCA) for safety practices prior to performing these functions. Installers shall provide temporary bracing per BCSI. Unless noted otherwise, top chord shall have properly attached structural sheathing and bottom chord shall have a properly attached rigid ceiling. Locations shown for permanent lateral restraint of webs shall have bracing installed per BCSI sections B3, B7 or B10, as applicable. Apply plates to each face of truss and position as shown above and/or the Joint Details, unless noted otherwise. Refer to drawings 160A-Z for standard plate positions.

Alpine, a division of ITW Building Components Group Inc. shall not be responsible for any deviation from this drawing, any failure to build the truss in conformance with ANSI/TPI 1, or for handling, shipping, installation & bracing of trusses.

A seal on this drawing or cover page listing this drawing, indicates acceptance of professional engineering responsibility solely for the design shown. The suitability and use of this drawing for any structure is the responsibility of the Building Designer per ANSI/TPI 1 Sec.2.

For more information see this job's general notes page and these web sites:
ALPINE: www.alpineitw.com; TPI: www.tpinst.org; WTCA: www.sbcindustry.com; ICC: www.iccsafe.org

DOUGLAS FLEMING LICENSE No. 66848 STATE OF FLORIDA PROFESSIONAL ENGINEER

TC LL	20.0 PSF	REF	R215-- 83906
TC DL	10.0 PSF	DATE	01/19/17
BC DL	10.0 PSF	DRW	HCUSR215 17019081
BC LL	0.0 PSF	HC-ENG	KD/DF
TOT.LD.	40.0 PSF	SEQN-	455389
DUR.FAC.	1.25	FROM	CDM
SPACING	24.0"	JREF-	1VXM215_Z04

Top chord 2x4 SP M-31
Bot chord 2x4 SP M-31
Webs 2x4 SP M-31

Bottom chord checked for 10.00 psf non-concurrent live load.

Deflection meets L/240 live and L/180 total load. Creep increase factor for dead load is 1.50.

Refer to DWG PB160101014 FOR PIGGYBACK DETAILS.

130 mph wind, 22.02 ft mean hgt, ASCE 7-10, CLOSED bldg, Located anywhere in roof, RISK CAT II, EXP C, wind TC DL=5.0 psf, wind BC DL=5.0 psf. GCpi(+/-)=0.18

Wind loads and reactions based on MWFRS with additional C&C member design.

MWFRS loads based on trusses located at least 44.03 ft. from roof edge.

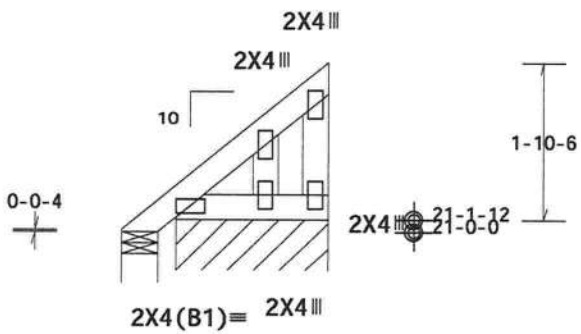

2-4-10 Over 2 Supports

R=22 Rw=34 U=4 W=5.167"
RL=41/-22
R=95 PLF U=20 PLF W=1-9-1

Design Crit: FBC2014Res/TPI-2007(STD)

PLT TYP. Wave FT/RT=20%(0%)/10(0) 16[illegible].01.0[illegible].0413.1[illegible] QTY:1 [illegible]L/-/1/-/-/R/- Scale =.5"/Ft.

ALPINE™ AN ITW COMPANY

2400 Lake Orange Dr., Suite 150
Orlando, FL 32837
FL COA #0278

WARNING! READ AND FOLLOW ALL NOTES ON THIS DRAWING!
IMPORTANT FURNISH THIS DRAWING TO ALL CONTRACTORS INCLUDING THE INSTALLERS.

Trusses require extreme care in fabricating, handling, shipping, installing and bracing. Refer to and follow the latest edition of BCSI (Building Component Safety Information, by TPI and WTCA) for safety practices pertinent to performing these functions. Installers shall provide temporary bracing per BCSI. Unless noted otherwise, top chord shall have properly attached structural sheathing and bottom chord shall have a properly attached rigid ceiling. Locations shown for permanent lateral restraint of webs shall have bracing installed per BCSI sections B3, B7 or B10, as applicable. Apply plates to each face of truss and position as shown above and/or the Joint Details, unless noted otherwise. Refer to drawings 160A-Z for standard plate positions.

Alpine, a division of ITW Building Components Group Inc. shall not be responsible for any deviation from this drawing, any failure to build the truss in conformance with ANSI/TPI 1, or for handling, shipping, installation & bracing of trusses.

A seal on this drawing or cover page listing this drawing, indicates acceptance of professional engineering responsibility solely for the design shown. The suitability and use of this drawing for any structure is the responsibility of the Building Designer per ANSI/TPI 1 Sec.2.

For more information see this job's general notes page and these web sites:
ALPINE: www.alpineitw.com; TPI: www.tpinst.org; WTCA: www.sbcindustry.com; ICC: www.iccsafe.org

DOUGLAS FLEMING LICENSE No. 66648 STATE OF FLORIDA PROFESSIONAL ENGINEER

TC LL	20.0 PSF	REF	R215-- 83907
TC DL	10.0 PSF	DATE	01/19/17
BC DL	10.0 PSF	DRW	HCUSR215 17019082
BC LL	0.0 PSF	HC-ENG	KD/DF
TOT.LD.	40.0 PSF	SEQN-	455393
DUR.FAC.	1.25	FROM	CDM
SPACING	24.0"	JREF-	1VXM215_Z04

(16-0982-/HUBBART RESIDENCE /SPARKS CONST. -- , FL - P08)

THIS DWG PREPARED FROM COMPUTER INPUT (LOADS & DIMENSIONS) SUBMITTED BY TRUSS MFR.

Top chord 2x4 SP M-31
Bot chord 2x4 SP M-31
Webs 2x4 SP M-31

Bottom chord checked for 10.00 psf non-concurrent live load.

Deflection meets L/240 live and L/180 total load. Creep increase factor for dead load is 1.50.

MWFRS loads based on trusses located at least 23.83 ft. from roof edge.

Refer to DWG PB160101014 FOR PIGGYBACK DETAILS.

130 mph wind, 23.83 ft mean hgt, ASCE 7-10, CLOSED bldg, Located anywhere in roof, RISK CAT II, EXP C, wind TC DL=5.0 psf, wind BC DL=5.0 psf. GCpi(+/-)=0.18

Wind loads and reactions based on MWFRS with additional C&C member design.

Right end vertical not exposed to wind pressure.

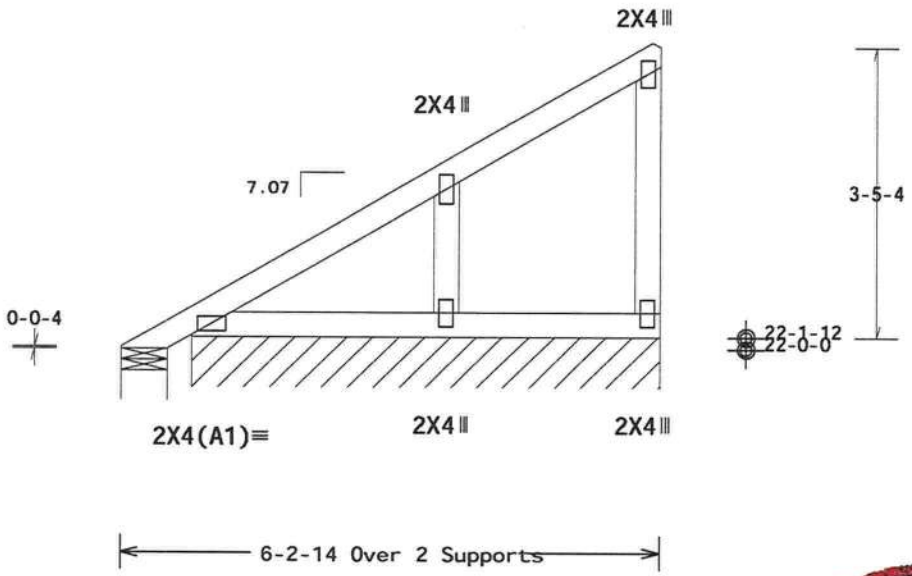

R=5 Rw=45 U=15 W=6.47"
RL=79/-28
R=91 PLF U=16 PLF W=5-5-0

Design Crit: FBC2014Res/TPI-2007(STD)

PLT TYP. Wave

FT/RT=20%(0%)/10(0) 16.01.09.10413.12 QTY:1 F/-/1/-/-/R/- Scale =.5"/Ft.

DOUGLAS FLEMING LICENSE No. 66846 STATE OF FLORIDA PROFESSIONAL ENGINEER

ALPINE AN ITW COMPANY
2400 Lake Orange Dr., Suite 150
Orlando, FL 32837
FL COA #0278

WARNING! READ AND FOLLOW ALL NOTES ON THIS DRAWING!
IMPORTANT FURNISH THIS DRAWING TO ALL CONTRACTORS INCLUDING THE INSTALLERS.

Trusses require extreme care in fabricating, handling, shipping, installing and bracing. Refer to and follow the latest edition of BCSI (Building Component Safety Information, by TPI and WTCA) for safety practices prior to performing these functions. Installers shall provide temporary bracing per BCSI. Unless noted otherwise, top chord shall have properly attached structural sheathing and bottom chord shall have a properly attached rigid ceiling. Locations shown for permanent lateral restraint of webs shall have bracing installed per BCSI sections B3, B7 or B10, as applicable. Apply plates to each face of truss and position as shown above and on the Joint Details, unless noted otherwise. Refer to drawings 160A-Z for standard plate positions.

Alpine, a division of ITW Building Components Group Inc. shall not be responsible for any deviation from this drawing, any failure to build the truss in conformance with ANSI/TPI 1, or for handling, shipping, installation & bracing of trusses.

A seal on this drawing or cover page listing this drawing, indicates acceptance of professional engineering responsibility solely for the design shown. The suitability and use of this drawing for any structure is the responsibility of the Building Designer per ANSI/TPI 1 Sec.2.

For more information see this job's general notes page and these web sites:
ALPINE: www.alpineitw.com; TPI: www.tpinst.org; WTCA: www.sbcindustry.com; ICC: www.iccsafe.org

TC LL	20.0 PSF	REF	R215-- 83908
TC DL	10.0 PSF	DATE	01/19/17
BC DL	10.0 PSF	DRW	HCUSR215 17019083
BC LL	0.0 PSF	HC-ENG	KD/DF
TOT.LD.	40.0 PSF	SEQN-	455370
DUR.FAC.	1.25	FROM	CDM
SPACING	24.0"	JREF-	1VXM215_Z04

01/20/2017

(16-0982-/HUBBART RESIDENCE /SPARKS CONST. -- , FL - P09)

THIS DWG PREPARED FROM COMPUTER INPUT (LOADS & DIMENSIONS) SUBMITTED BY TRUSS MFR.

Top chord 2x4 SP M-31
Bot chord 2x4 SP M-31
Webs 2x4 SP M-31

Bottom chord checked for 10.00 psf non-concurrent live load.

Deflection meets L/240 live and L/180 total load. Creep increase factor for dead load is 1.50.

Refer to DWG PB160101014 FOR PIGGYBACK DETAILS.

130 mph wind, 23.83 ft mean hgt, ASCE 7-10, CLOSED bldg, not located within 9.00 ft from roof edge, RISK CAT II, EXP C, wind TC DL=5.0 psf, wind BC DL=5.0 psf. GCpi(+/-)=0.18

Wind loads and reactions based on MWFRS with additional C&C member design.

MWFRS loads based on trusses located at least 23.83 ft. from roof edge.

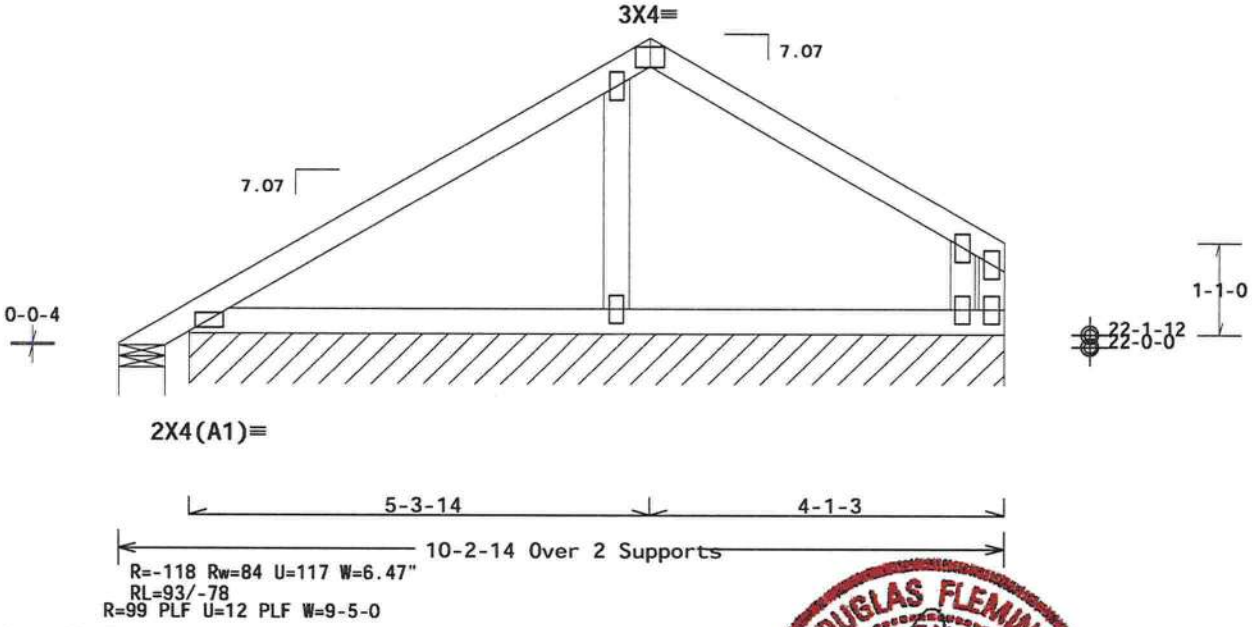

Note: All Plates Are 2X4 Except As Shown.

Design Crit: FBC2014Res/TPI-2007(STD)

PLT TYP. Wave FT/RT=20%(0%)/10(0) 16.01.09.0413.17 QTY:1 F/-/1/-/-/R/- Scale =.5"/Ft.

ALPINE AN ITW COMPANY
2400 Lake Orange Dr., Suite 150
Orlando, FL 32837
FL COA #0278

WARNING! READ AND FOLLOW ALL NOTES ON THIS DRAWING!
IMPORTANT FURNISH THIS DRAWING TO ALL CONTRACTORS INCLUDING THE INSTALLERS.

Trusses require extreme care in fabricating, handling, shipping, installing and bracing. Refer to and follow the latest edition of BCSI (Building Component Safety Information, by TPI and WTCA) for safety practices prior to performing these functions. Installers shall provide temporary bracing per BCSI. Unless noted otherwise, top chord shall have properly attached structural sheathing and bottom chord shall have a properly attached rigid ceiling. Locations shown for permanent lateral restraint of webs shall have bracing installed per BCSI sections B3, B7 or B10, as applicable. Apply plates to each face of truss and position as shown above and on the Joint Details, unless noted otherwise. Refer to drawings 160A-Z for standard plate positions.

Alpine, a division of ITW Building Components Group Inc. shall not be responsible for any deviation from this drawing, any failure to build the truss in conformance with ANSI/TPI 1, or for handling, shipping, installation & bracing of trusses.

A seal on this drawing or cover page listing this drawing, indicates acceptance of professional engineering responsibility solely for the design shown. The suitability and use of this drawing for any structure is the responsibility of the Building Designer per ANSI/TPI 1 Sec.2.

For more information see this job's general notes page and these web sites:
ALPINE: www.alpineitw.com; TPI: www.tpinst.org; WTCA: www.sbcindustry.com; ICC: www.iccsafe.org

DOUGLAS FLEMING LICENSE No. 66848 STATE OF FLORIDA PROFESSIONAL ENGINEER

TC LL	20.0 PSF	REF R215-- 83909
TC DL	10.0 PSF	DATE 01/19/17
BC DL	10.0 PSF	DRW HCUSR215 17019084
BC LL	0.0 PSF	HC-ENG KD/DF
TOT.LD.	40.0 PSF	SEQN- 455368
DUR.FAC.	1.25	FROM CDM
SPACING	24.0"	JREF- 1VXM215_Z04

01/20/2017

(16-0982-/HUBBART RESIDENCE /SPARKS CONST. -- , FL - P10)

THIS DWG PREPARED FROM COMPUTER INPUT (LOADS & DIMENSIONS) SUBMITTED BY TRUSS MFR.

Top chord 2x4 SP M-31
Bot chord 2x4 SP M-31
Webs 2x4 SP M-31

Bottom chord checked for 10.00 psf non-concurrent live load.

Deflection meets L/240 live and L/180 total load. Creep increase factor for dead load is 1.50.

Refer to DWG PB160101014 FOR PIGGYBACK DETAILS.

130 mph wind, 23.83 ft mean hgt, ASCE 7-10, CLOSED bldg, not located within 9.00 ft from roof edge, RISK CAT II, EXP C, wind TC DL=5.0 psf, wind BC DL=5.0 psf. GCpi(+/-)=0.18

Wind loads and reactions based on MWFRS with additional C&C member design.

MWFRS loads based on trusses located at least 23.83 ft. from roof edge.

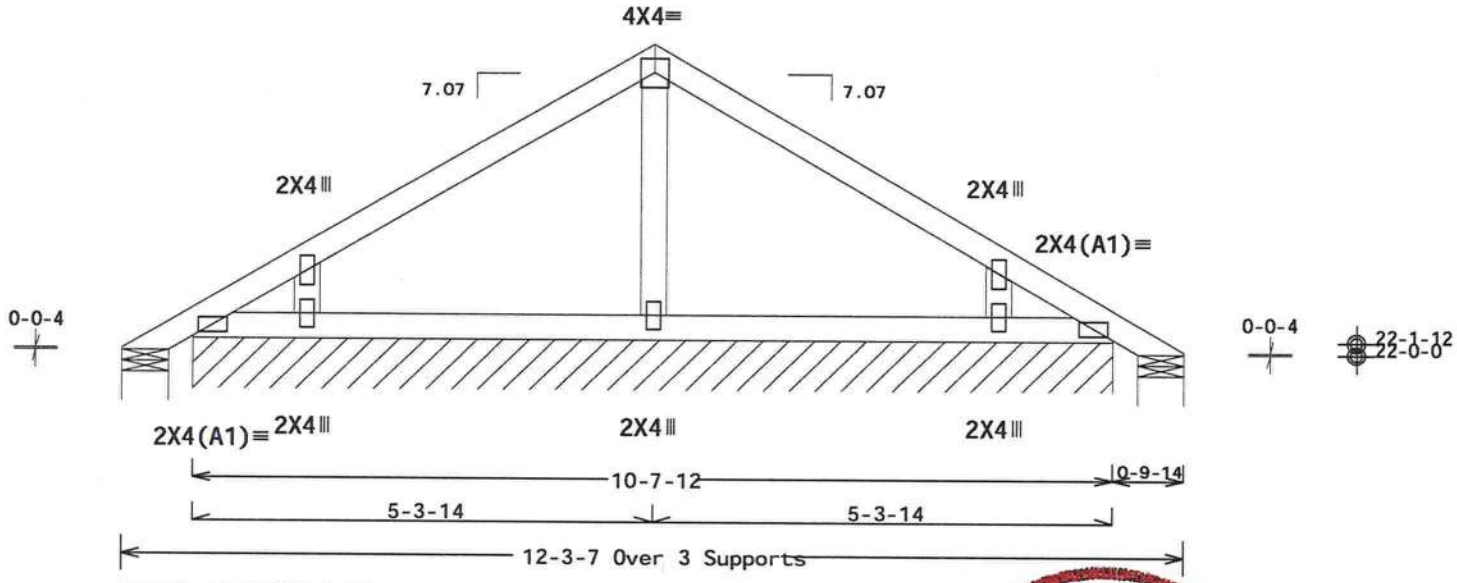

R=34 Rw=62 U=42 W=6.47"
RL=98/-98

R=86 PLF U=7 PLF W=10-7-12

Design Crit: FBC2014Res/TPI-2007(STD)

PLT TYP. Wave

FT/RT=20%(0%)/10(0) 16.01.09.0413.17 QTY:1 R/-/1/-/-/R/- Scale =.5"/Ft.

ALPINE AN ITW COMPANY

2400 Lake Orange Dr., Suite 150
Orlando, FL 32837
FL COA #0278

WARNING! READ AND FOLLOW ALL NOTES ON THIS DRAWING!
IMPORTANT FURNISH THIS DRAWING TO ALL CONTRACTORS INCLUDING THE INSTALLERS.

Trusses require extreme care in fabricating, handling, shipping, installing and bracing. Refer to and follow the latest edition of BCSI (Building Component Safety Information, by TPI and WTCA) for safety practices pertinent to performing these functions. Installers shall provide temporary bracing per BCSI. Unless noted otherwise, top chord shall have properly attached structural sheathing and bottom chord shall have a properly attached rigid ceiling. Locations shown for permanent lateral restraint of webs shall have bracing installed per BCSI sections B3, B7 or B10, as applicable. Apply plates to each face of truss and position as shown above and on the Joint Details, unless noted otherwise. Refer to drawings 160A-Z for standard plate positions.

Alpine, a division of ITW Building Components Group Inc. shall not be responsible for any deviation from this drawing, any failure to build the truss in conformance with ANSI/TPI 1, or for handling, shipping, installation & bracing of trusses.

A seal on this drawing or cover page listing this drawing, indicates acceptance of professional engineering responsibility solely for the design shown. The suitability and use of this drawing for any structure is the responsibility of the Building Designer per ANSI/TPI 1 Sec.2.

For more information see this job's general notes page and these web sites:
ALPINE: www.alpineitw.com; TPI: www.tpinst.org; WTCA: www.sbcindustry.com; ICC: www.iccsafe.org

DOUGLAS FLEMING LICENSE No. 66848 STATE OF FLORIDA PROFESSIONAL ENGINEER

TC LL	20.0 PSF	REF	R215-- 83910
TC DL	10.0 PSF	DATE	01/19/17
BC DL	10.0 PSF	DRW	HCUSR215 17019085
BC LL	0.0 PSF	HC-ENG	KD/DF
TOT.LD.	40.0 PSF	SEQN-	455366
DUR.FAC.	1.25	FROM	CDM
SPACING	24.0"	JREF-	1VXM215_Z04

01/20/2017

(16-0982-/HUBBART RESIDENCE /SPARKS CONST. -- , FL - P11)

THIS DWG PREPARED FROM COMPUTER INPUT (LOADS & DIMENSIONS) SUBMITTED BY TRUSS MFR.

Top chord 2x4 SP M-31
Bot chord 2x4 SP M-31
Webs 2x4 SP M-31

Bottom chord checked for 10.00 psf non-concurrent live load.

Deflection meets L/240 live and L/180 total load. Creep increase factor for dead load is 1.50.

MWFRS loads based on trusses located at least 23.86 ft. from roof edge.

Refer to DWG PB160101014 FOR PIGGYBACK DETAILS.

(**) 1 plate(s) require special positioning. Refer to scaled plate plot details for special positioning requirements.

130 mph wind, 23.86 ft mean hgt, ASCE 7-10, CLOSED bldg, not located within 9.00 ft from roof edge, RISK CAT II, EXP C, wind TC DL=5.0 psf, wind BC DL=5.0 psf. GCpi(+/-)=0.18

Wind loads and reactions based on MWFRS with additional C&C member design.

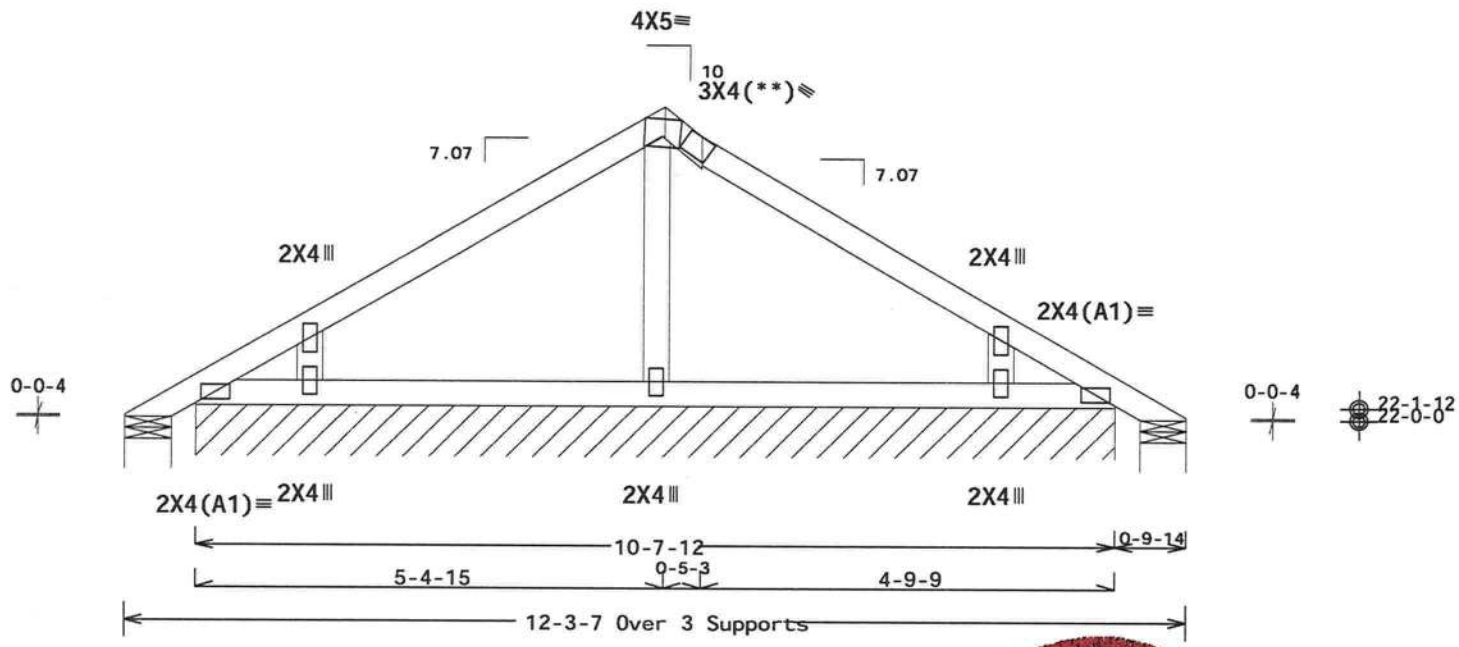

R=33 Rw=62 U=41 W=6.47"
RL=100/-99
R=86 PLF U=7 PLF W=10-7-12

Design Crit: FBC2014Res/TPI-2007(STD)

PLT TYP. Wave

FT/RT=20%(0%)/10(0) 16 01.00.0413.17 QTY 1 FL/-/1/-/-/R/- Scale =.5"/Ft.

ALPINE™ AN ITW COMPANY
2400 Lake Orange Dr., Suite 150
Orlando, FL 32837
FL COA #0278

WARNING! READ AND FOLLOW ALL NOTES ON THIS DRAWING!
IMPORTANT FURNISH THIS DRAWING TO ALL CONTRACTORS INCLUDING THE INSTALLERS.

Trusses require extreme care in fabricating, handling, shipping, installing and bracing. Refer to and follow the latest edition of BCSI (Building Component Safety Information, by TPI and WTCA) for safety practices pertinent to performing these functions. Installers shall provide temporary bracing per BCSI. Unless noted otherwise, top chord shall have properly attached structural sheathing and bottom chord shall have a properly attached rigid ceiling. Locations shown for permanent lateral restraint of webs shall have bracing installed per BCSI sections B3, B7 or B10, as applicable. Apply plates to each face of truss and position as shown above and/or the Joint Details, unless noted otherwise. Refer to drawings 160A-Z for standard plate positions.

Alpine, a division of ITW Building Components Group Inc. shall not be responsible for any deviation from this drawing, any failure to build the truss in conformance with ANSI/TPI 1, or for handling, shipping, installation & bracing of trusses.

A seal on this drawing or cover page listing this drawing, indicates acceptance of professional engineering responsibility solely for the design shown. The suitability and use of this drawing for any structure is the responsibility of the Building Designer per ANSI/TPI 1 Sec.2.

For more information see this job's general notes page and these web sites:
ALPINE: www.alpineitw.com; TPI: www.tpinst.org; WTCA: www.sbcindustry.com; ICC: www.iccsafe.org

DOUGLAS FLEMING LICENSE No. 66648 STATE OF FLORIDA PROFESSIONAL ENGINEER

TC LL	20.0 PSF	REF R215-- 83911
TC DL	10.0 PSF	DATE 01/19/17
BC DL	10.0 PSF	DRW HCUSR215 17019086
BC LL	0.0 PSF	HC-ENG KD/DF
TOT.LD.	40.0 PSF	SEQN- 455364
DUR.FAC.	1.25	FROM CDM
SPACING	24.0"	JREF- 1VXM215_Z04

01/20/2017

(16-0982-/HUBBART RESIDENCE /SPARKS CONST. -- , FL - P12)

THIS DWG PREPARED FROM COMPUTER INPUT (LOADS & DIMENSIONS) SUBMITTED BY TRUSS MFR.

Top chord 2x4 SP M-31
Bot chord 2x4 SP M-31
Webs 2x4 SP M-31

Bottom chord checked for 10.00 psf non-concurrent live load.

Deflection meets L/240 live and L/180 total load. Creep increase factor for dead load is 1.50.

Refer to DWG PB160101014 FOR PIGGYBACK DETAILS.

130 mph wind, 24.20 ft mean hgt, ASCE 7-10, CLOSED bldg, not located within 9.00 ft from roof edge, RISK CAT II, EXP C, wind TC DL=5.0 psf, wind BC DL=5.0 psf. GCpi(+/-)=0.18

Wind loads and reactions based on MWFRS with additional C&C member design.

MWFRS loads based on trusses located at least 24.20 ft. from roof edge.

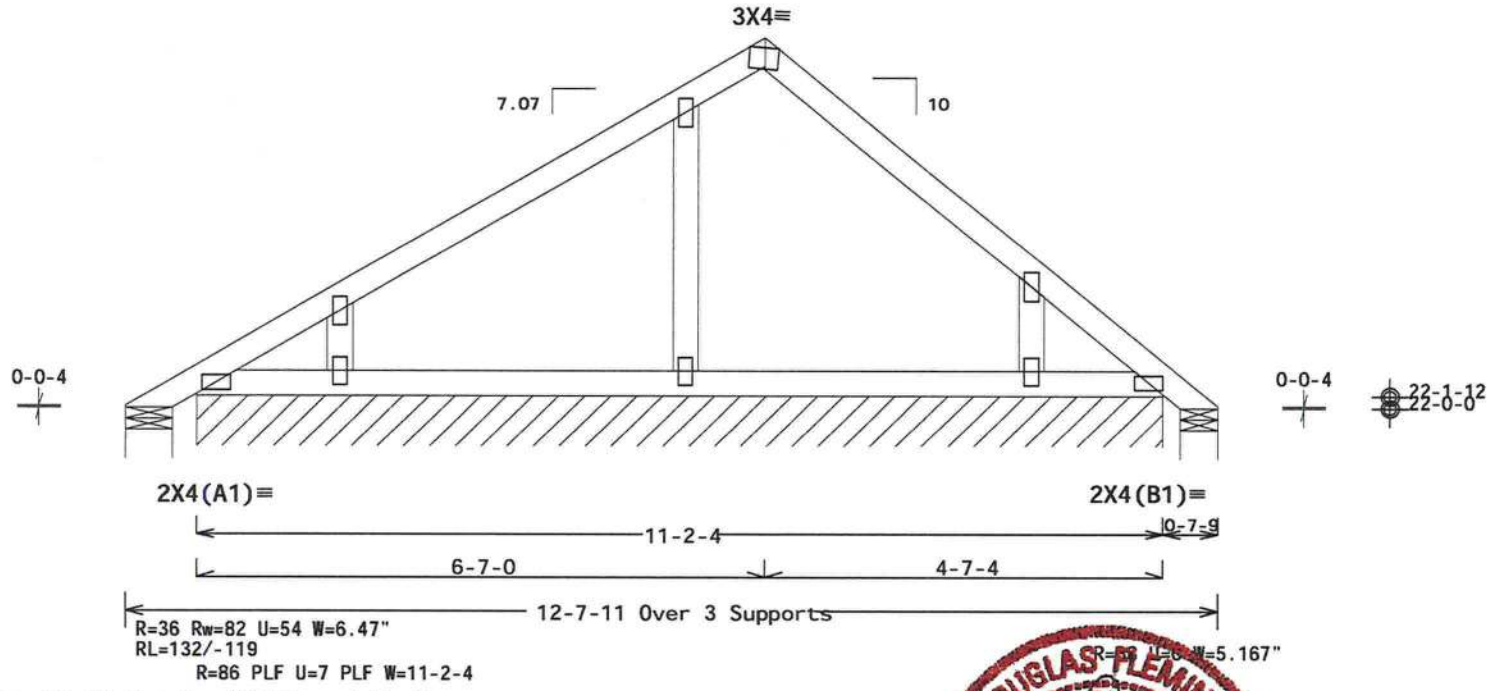

Note: All Plates Are 2X4 Except As Shown.

Design Crit: FBC2014Res/TPI-2007(STD)

PLT TYP. Wave FT/RT=20%(0%)/10(0) 16 01.00.0413.13 QTY 1 RL/-/1/-/-/R/- Scale =.5"/Ft.

ALPINE™ AN ITW COMPANY

2400 Lake Orange Dr., Suite 150
Orlando, FL 32837
FL COA #0278

WARNING! READ AND FOLLOW ALL NOTES ON THIS DRAWING!
IMPORTANT FURNISH THIS DRAWING TO ALL CONTRACTORS INCLUDING THE INSTALLERS.

Trusses require extreme care in fabricating, handling, shipping, installing and bracing. Refer to and follow the latest edition of BCSI (Building Component Safety Information, by TPI and WTCA) for safety practices pertinent to performing these functions. Installers shall provide temporary bracing per BCSI. Unless noted otherwise, top chord shall have properly attached structural sheathing and bottom chord shall have a properly attached rigid ceiling. Locations shown for permanent lateral restraint of webs shall have bracing installed per BCSI sections B3, B7 or B10, as applicable. Apply plates to each face of truss and position as shown above and as the Joint Details, unless noted otherwise. Refer to drawings 160A-Z for standard plate positions.

Alpine, a division of ITW Building Components Group Inc. shall not be responsible for any deviation from this drawing, any failure to build the truss in conformance with ANSI/TPI 1, or for handling, shipping, installation & bracing of trusses.

A seal on this drawing or cover page listing this drawing, indicates acceptance of professional engineering responsibility solely for the design shown. The suitability and use of this drawing for any structure is the responsibility of the Building Designer per ANSI/TPI 1 Sec.2.

For more information see this job's general notes page and these web sites:
ALPINE: www.alpineitw.com; TPI: www.tpinst.org; WTCA: www.sbcindustry.com; ICC: www.iccsafe.org

DOUGLAS FLEMING LICENSE No. 66646 STATE OF FLORIDA PROFESSIONAL ENGINEER

TC LL	20.0 PSF	REF R215-- 83912
TC DL	10.0 PSF	DATE 01/19/17
BC DL	10.0 PSF	DRW HCUSR215 17019087
BC LL	0.0 PSF	HC-ENG KD/DF
TOT.LD.	40.0 PSF	SEQN- 455362
DUR.FAC.	1.25	FROM CDM
SPACING	24.0"	JREF- 1VXM215_Z04

01/20/2017

(16-0982-/HUBBART RESIDENCE /SPARKS CONST. -- , FL - P13)

THIS DWG PREPARED FROM COMPUTER INPUT (LOADS & DIMENSIONS) SUBMITTED BY TRUSS MFR.

Top chord 2x4 SP M-31
Bot chord 2x4 SP M-31
Webs 2x4 SP M-31

Bottom chord checked for 10.00 psf non-concurrent live load.

Deflection meets L/240 live and L/180 total load. Creep increase factor for dead load is 1.50.

Refer to DWG PB160101014 FOR PIGGYBACK DETAILS.

130 mph wind, 24.55 ft mean hgt, ASCE 7-10, CLOSED bldg, not located within 9.00 ft from roof edge, RISK CAT II, EXP C, wind TC DL=5.0 psf, wind BC DL=5.0 psf. GCpi(+/-)=0.18

Wind loads and reactions based on MWFRS with additional C&C member design.

MWFRS loads based on trusses located at least 24.55 ft. from roof edge.

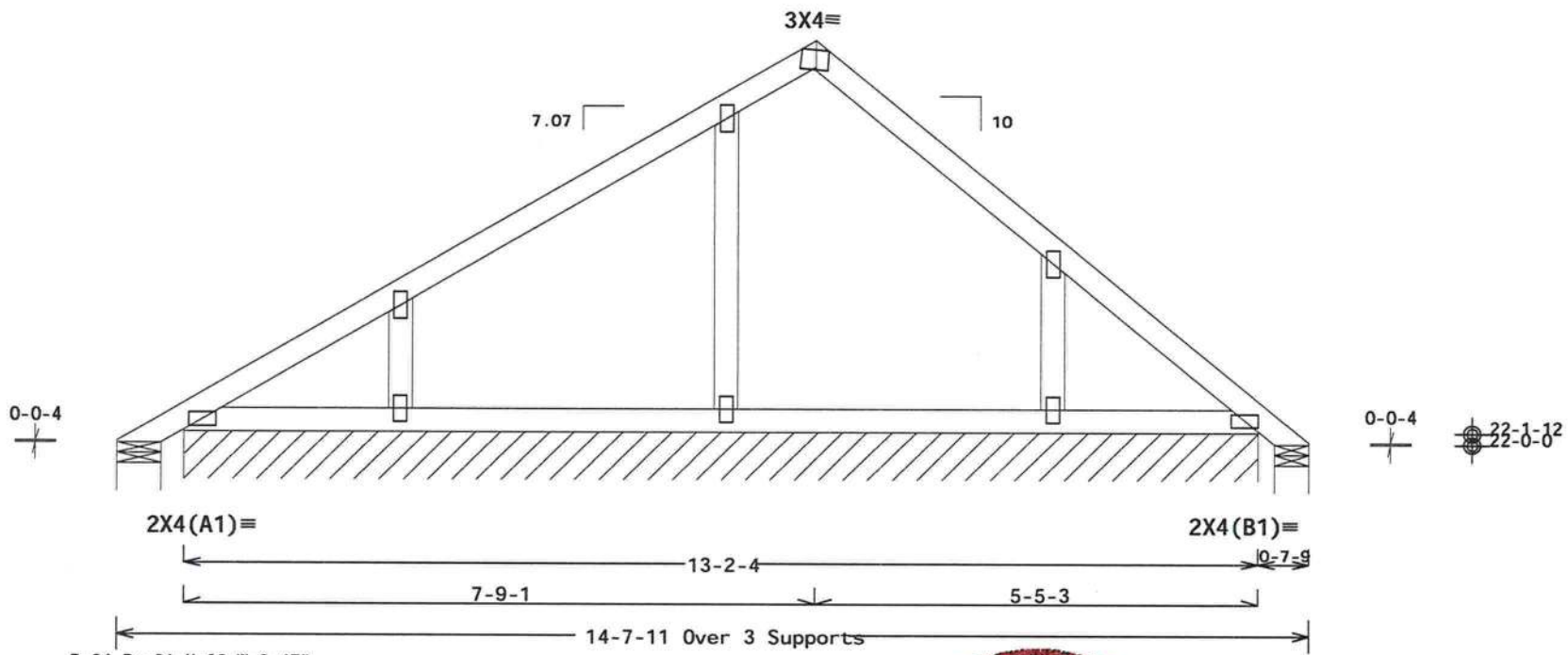

Note: All Plates Are 2X4 Except As Shown.

Design Crit: FBC2014Res/TPI-2007(STD)

PLT TYP. Wave

FT/RT=20%(0%)/10(0) 16 01.00.0413.15 QTY 1 FL/-/1/-/-/R/- Scale =.5"/Ft.

DOUGLAS FLEMING LICENSE NO. 66648 STATE OF FLORIDA PROFESSIONAL ENGINEER

ALPINE™ AN ITW COMPANY

2400 Lake Orange Dr., Suite 150
Orlando, FL 32837
FL COA #0278

WARNING! READ AND FOLLOW ALL NOTES ON THIS DRAWING!
IMPORTANT FURNISH THIS DRAWING TO ALL CONTRACTORS INCLUDING THE INSTALLERS.

Trusses require extreme care in fabricating, handling, shipping, installing and bracing. Refer to and follow the latest edition of BCSI (Building Component Safety Information, by TPI and WTCA) for safety practices prior to performing these functions. Installers shall provide temporary bracing per BCSI. Unless noted otherwise, top chord shall have properly attached structural sheathing and bottom chord shall have a properly attached rigid ceiling. Locations shown for permanent lateral restraint of webs shall have bracing installed per BCSI sections B3, B7 or B10, as applicable. Apply plates to each face of truss and position as shown above and/or the Joint Details, unless noted otherwise. Refer to drawings 160A-Z for standard plate positions.

Alpine, a division of ITW Building Components Group Inc. shall not be responsible for any deviation from this drawing, any failure to build the truss in conformance with ANSI/TPI 1, or for handling, shipping, installation & bracing of trusses.

A seal on this drawing or cover page listing this drawing, indicates acceptance of professional engineering responsibility solely for the design shown. The suitability and use of this drawing for any structure is the responsibility of the Building Designer per ANSI/TPI 1 Sec.2.

For more information see this job's general notes page and these web sites:
ALPINE: www.alpineitw.com; TPI: www.tpinst.org; WTCA: www.sbcindustry.com; ICC: www.iccsafe.org

TC LL	20.0 PSF	REF R215-- 83913
TC DL	10.0 PSF	DATE 01/19/17
BC DL	10.0 PSF	DRW HCUSR215 17019088
BC LL	0.0 PSF	HC-ENG KD/DF
TOT.LD.	40.0 PSF	SEQN- 455361
DUR.FAC.	1.25	FROM CDM
SPACING	24.0"	JREF- 1VXM215_Z04

01/20/2017

(16-0982-/HUBBART RESIDENCE /SPARKS CONST. -- , FL - P14)

THIS DWG PREPARED FROM COMPUTER INPUT (LOADS & DIMENSIONS) SUBMITTED BY TRUSS MFR.

Top chord 2x4 SP M-31
Bot chord 2x4 SP M-31
Webs 2x4 SP M-31

Bottom chord checked for 10.00 psf non-concurrent live load.

Deflection meets L/240 live and L/180 total load. Creep increase factor for dead load is 1.50.

Refer to DWG PB160101014 FOR PIGGYBACK DETAILS.

130 mph wind, 24.17 ft mean hgt, ASCE 7-10, CLOSED bldg, not located within 9.00 ft from roof edge, RISK CAT II, EXP C, wind TC DL=5.0 psf, wind BC DL=5.0 psf. GCpi(+/-)=0.18

Wind loads and reactions based on MWFRS with additional C&C member design.

MWFRS loads based on trusses located at least 24.17 ft. from roof edge.

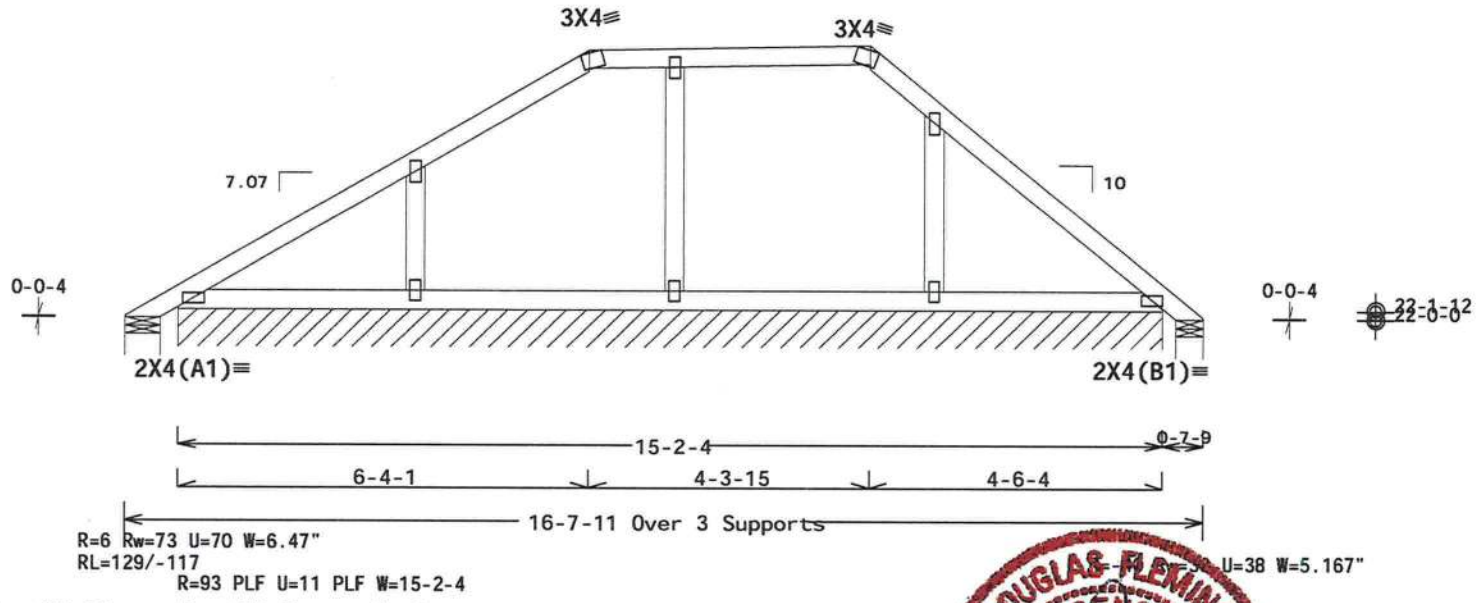

Note: All Plates Are 2X4 Except As Shown.

Design Crit: FBC2014Res/TPI-2007(STD)

PLT TYP. Wave

FT/RT=20%(0%)/10(0)

16.01.05.0418 1 QTY: 1

F: /-/1/-/-/R/-

Scale =.375"/Ft.

DOUGLAS FLEMING LICENSE No. 66848 STATE OF FLORIDA PROFESSIONAL ENGINEER

TC LL	20.0 PSF	REF	R215-- 83914
TC DL	10.0 PSF	DATE	01/19/17
BC DL	10.0 PSF	DRW	HCUSR215 17019089
BC LL	0.0 PSF	HC-ENG	KD/DF
TOT.LD.	40.0 PSF	SEQN-	455360
DUR.FAC.	1.25	FROM	CDM
SPACING	24.0"	JREF-	1VXM215_Z04

ALPINE™ AN ITW COMPANY

2400 Lake Orange Dr., Suite 150
Orlando, FL 32837
FL COA #0278

WARNING! READ AND FOLLOW ALL NOTES ON THIS DRAWING!
IMPORTANT FURNISH THIS DRAWING TO ALL CONTRACTORS INCLUDING THE INSTALLERS.

Trusses require extreme care in fabricating, handling, shipping, installing and bracing. Refer to and follow the latest edition of BCSI (Building Component Safety Information, by TPI and WTCA) for safety practices pertinent to performing these functions. Installers shall provide temporary bracing per BCSI. Unless noted otherwise, top chord shall have properly attached structural sheathing and bottom chord shall have a properly attached rigid ceiling. Locations shown for permanent lateral restraint of webs shall have bracing installed per BCSI sections B3, B7 or B10, as applicable. Apply plates to each face of truss and position as shown above and on the Joint Details, unless noted otherwise. Refer to drawings 160A-Z for standard plate positions.

Alpine, a division of ITW Building Components Group Inc. shall not be responsible for any deviation from this drawing, any failure to build the truss in conformance with ANSI/TPI 1, or for handling, shipping, installation & bracing of trusses.

A seal on this drawing or cover page listing this drawing, indicates acceptance of professional engineering responsibility solely for the design shown. The suitability and use of this drawing for any structure is the responsibility of the Building Designer per ANSI/TPI 1 Sec.2.

For more information see this job's general notes page and these web sites:
ALPINE: www.alpineitw.com; TPI: www.tpinst.org; WTCA: www.sbcindustry.com; ICC: www.iccsafe.org

01/20/2017

(16-0982-/HUBBART RESIDENCE /SPARKS CONST. -- , FL - P15)

Top chord 2x4 SP M-31
Bot chord 2x4 SP M-31
Webs 2x4 SP M-31

In lieu of structural panels use purlins to brace all flat TC @ 24" OC.

Bottom chord checked for 10.00 psf non-concurrent live load.

MWFRS loads based on trusses located at least 23.33 ft. from roof edge.

Refer to DWG PB160101014 FOR PIGGYBACK DETAILS.

130 mph wind, 23.33 ft mean hgt, ASCE 7-10, CLOSED bldg, not located within 9.00 ft from roof edge, RISK CAT II, EXP C, wind TC DL=5.0 psf, wind BC DL=5.0 psf. GCpi(+/-)=0.18

Wind loads and reactions based on MWFRS with additional C&C member design.

Deflection meets L/240 live and L/180 total load. Creep increase factor for dead load is 1.50.

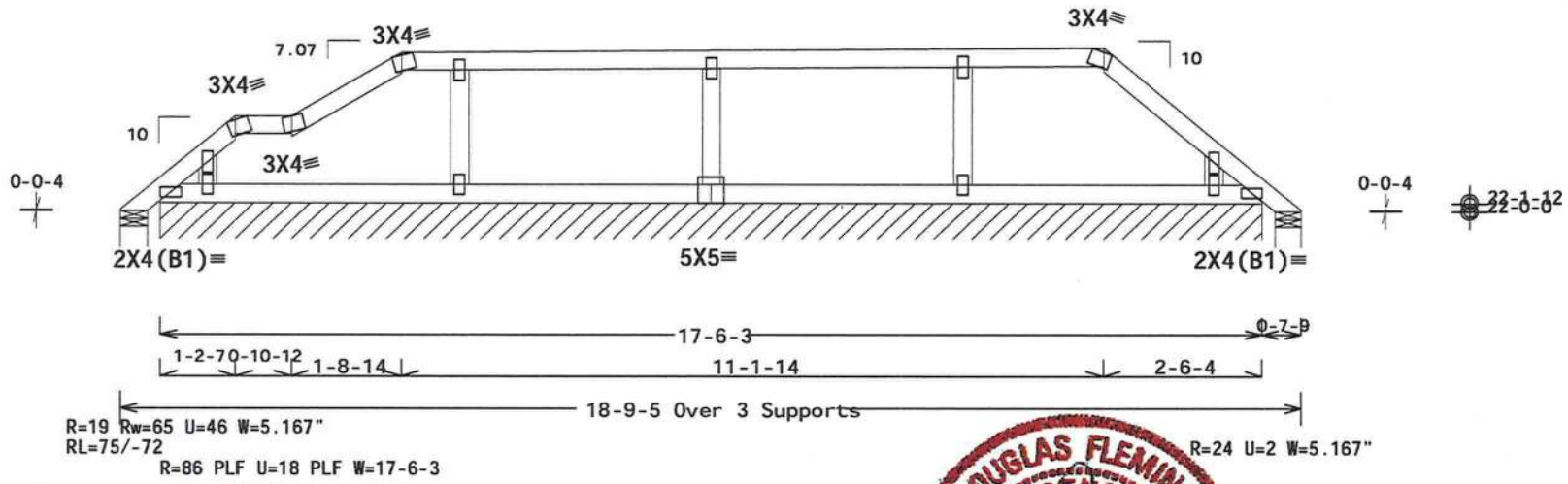

Note: All Plates Are 2X4 Except As Shown.

Design Crit: FBC2014Res/TPI-2007(STD)

PLT TYP. Wave FT/RT=20%(0%)/10(0) 16.01.05.0412.1 QTY: F/-/1/-/-/R/- Scale =.375"/Ft.

DOUGLAS FLEMING LICENSE No. 66848 STATE OF FLORIDA PROFESSIONAL ENGINEER

ALPINE AN ITW COMPANY

2400 Lake Orange Dr., Suite 150
Orlando, FL 32837
FL COA #0278

WARNING! READ AND FOLLOW ALL NOTES ON THIS DRAWING!
IMPORTANT FURNISH THIS DRAWING TO ALL CONTRACTORS INCLUDING THE INSTALLERS.

Trusses require extreme care in fabricating, handling, shipping, installing and bracing. Refer to and follow the latest edition of BCSI (Building Component Safety Information, by TPI and WTCA) for safety practices prior to performing these functions. Installers shall provide temporary bracing per BCSI. Unless noted otherwise, top chord shall have properly attached structural sheathing and bottom chord shall have a properly attached rigid ceiling. Locations shown for permanent lateral restraint of webs shall have bracing installed per BCSI sections B3, B7 or B10, as applicable. Apply plates to each face of truss and position as shown above and on the Joint Details, unless noted otherwise. Refer to drawings 160A-Z for standard plate positions.

Alpine, a division of ITW Building Components Group Inc. shall not be responsible for any deviation from this drawing, any failure to build the truss in conformance with ANSI/TPI 1, or for handling, shipping, installation & bracing of trusses.

A seal on this drawing or cover page listing this drawing, indicates acceptance of professional engineering responsibility solely for the design shown. The suitability and use of this drawing for any structure is the responsibility of the Building Designer per ANSI/TPI 1 Sec.2.

For more information see this job's general notes page and these web sites:
ALPINE: www.alpineitw.com; TPI: www.tpinst.org; WTCA: www.sbcindustry.com; ICC: www.iccsafe.org

TC LL	20.0 PSF	REF R215-- 83915
TC DL	10.0 PSF	DATE 01/19/17
BC DL	10.0 PSF	DRW HCUSR215 17019090
BC LL	0.0 PSF	HC-ENG KD/DF
TOT.LD.	40.0 PSF	SEQN- 455359
DUR.FAC.	1.25	FROM CDM
SPACING	24.0"	JREF- 1VXM215_Z04

01/20/2017

(16-0982-/HUBBART RESIDENCE /SPARKS CONST. -- , FL - P16)

THIS DWG PREPARED FROM COMPUTER INPUT (LOADS & DIMENSIONS) SUBMITTED BY TRUSS MFR.

Top chord 2x4 SP M-31
Bot chord 2x4 SP M-31
Webs 2x4 SP M-31

In lieu of structural panels use purlins to brace all flat TC @ 24" OC.

Bottom chord checked for 10.00 psf non-concurrent live load.

Deflection meets L/240 live and L/180 total load. Creep increase factor for dead load is 1.50.

Refer to DWG PB160101014 FOR PIGGYBACK DETAILS.

(**) 4 plate(s) require special positioning. Refer to scaled plate plot details for special positioning requirements.

130 mph wind, 22.50 ft mean hgt, ASCE 7-10, CLOSED bldg, not located within 9.00 ft from roof edge, RISK CAT II, EXP C, wind TC DL=5.0 psf, wind BC DL=5.0 psf. GCpi(+/-)=0.18

Wind loads and reactions based on MWFRS with additional C&C member design.

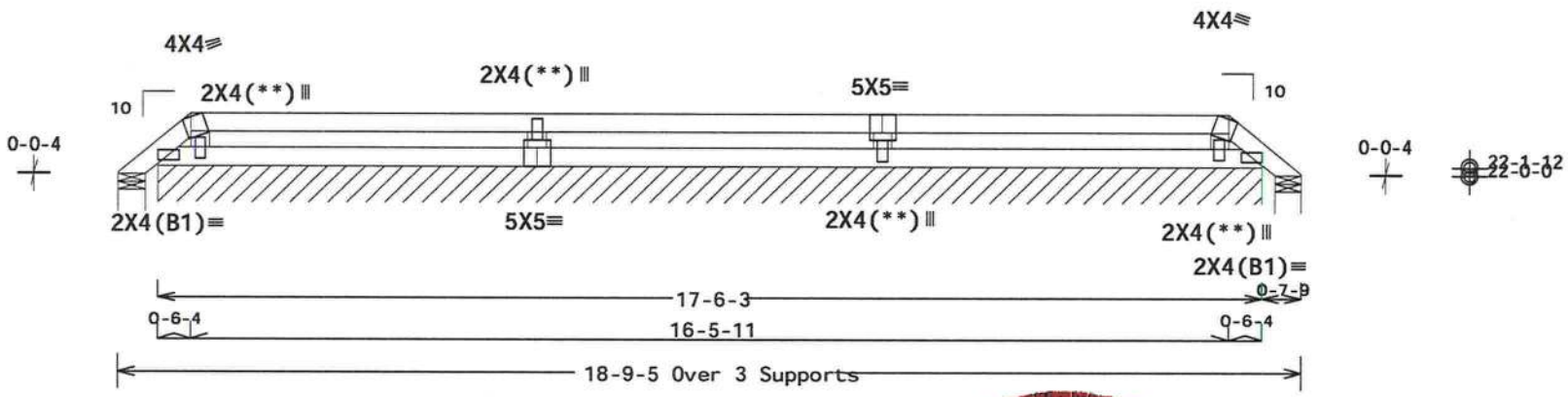

R=24 Rw=25 U=12 W=5.167"
RL=25/-25
R=90 PLF U=26 PLF W=17-6-3

R=2 Rw=24 U=6 W=5.167"

Design Crit: FBC2014Res/TPI-2007(STD)
FT/RT=20%(0%)/10(0) 16[illegible]01.0[illegible].0413.1[illegible] QTY 1 [illegible]L/-/1/-/-/R/-

PLT TYP. Wave

Scale =.375"/Ft.

DOUGLAS FLEMING LICENSE No. 66848 STATE OF FLORIDA PROFESSIONAL ENGINEER

ALPINE™ AN ITW COMPANY
2400 Lake Orange Dr., Suite 150
Orlando, FL 32837
FL COA #0278

WARNING! READ AND FOLLOW ALL NOTES ON THIS DRAWING!
IMPORTANT FURNISH THIS DRAWING TO ALL CONTRACTORS INCLUDING THE INSTALLERS.

Trusses require extreme care in fabricating, handling, shipping, installing and bracing. Refer to and follow the latest edition of BCSI (Building Component Safety Information, by TPI and WTCA) for safety practices pertinent to performing these functions. Installers shall provide temporary bracing per BCSI. Unless noted otherwise, top chord shall have properly attached structural sheathing and bottom chord shall have a properly attached rigid ceiling. Locations shown for permanent lateral restraint of webs shall have bracing installed per BCSI sections B3, B7 or B10, as applicable. Apply plates to each face of truss and position as shown above and/or the Joint Details, unless noted otherwise. Refer to drawings 160A-Z for standard plate positions.

Alpine, a division of ITW Building Components Group Inc. shall not be responsible for any deviation from this drawing, any failure to build the truss in conformance with ANSI/TPI 1, or for handling, shipping, installation & bracing of trusses.

A seal on this drawing or cover page listing this drawing, indicates acceptance of professional engineering responsibility solely for the design shown. The suitability and use of this drawing for any structure is the responsibility of the Building Designer per ANSI/TPI 1 Sec.2.

For more information see this job's general notes page and these web sites:
ALPINE: www.alpineitw.com; TPI: www.tpinst.org; WTCA: www.sbcindustry.com; ICC: www.iccsafe.org

TC LL	20.0 PSF	REF R215-- 83916
TC DL	10.0 PSF	DATE 01/19/17
BC DL	10.0 PSF	DRW HCUSR215 17019091
BC LL	0.0 PSF	HC-ENG KD/DF
TOT.LD.	40.0 PSF	SEQN- 455437
DUR.FAC.	1.25	FROM CDM
SPACING	24.0"	JREF- 1VXM215_Z04

(16-0982-/HUBBART RESIDENCE /SPARKS CONST. -- , FL - P17)

THIS DWG PREPARED FROM COMPUTER INPUT (LOADS & DIMENSIONS) SUBMITTED BY TRUSS MFR.

Top chord 2x4 SP M-31
Bot chord 2x4 SP M-31
Webs 2x4 SP M-31

130 mph wind, 22.98 ft mean hgt, ASCE 7-10, CLOSED bldg, Located anywhere in roof, RISK CAT II, EXP C, wind TC DL=5.0 psf, wind BC DL=5.0 psf. GCpi(+/-)=0.18

Wind loads and reactions based on MWFRS with additional C&C member design.

Deflection meets L/240 live and L/180 total load. Creep increase factor for dead load is 1.50.

Refer to DWG PB160101014 FOR PIGGYBACK DETAILS.

2 COMPLETE TRUSSES REQUIRED

Nail Schedule:0.131"x3", min. nails
Top Chord: 1 Row @12.00" o.c.
Bot Chord: 1 Row @12.00" o.c.
Webs : 1 Row @ 4" o.c.
Use equal spacing between rows and stagger nails in each row to avoid splitting.

Bottom chord checked for 10.00 psf non-concurrent live load.

MWFRS loads based on trusses located at least 22.98 ft. from roof edge.

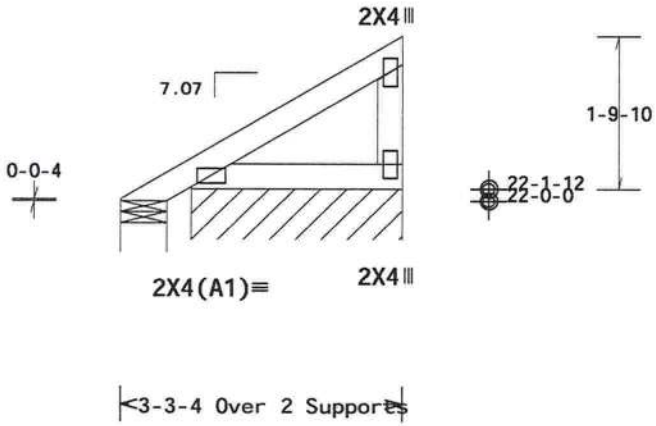

R=5 Rw=24 U=7 W=6.47"
RL=40
R=104 PLT U=18 PLT W=2-5-6

Design Crit: FBC2014Res/TPI-2007(STD)

PLT TYP. Wave FT/RT=20%(0%)/10(0) 16[illegible]01.00.0473.16 QTY:1 TL/-/1/-/-/R/- Scale =.5"/Ft.

ALPINE™ AN ITW COMPANY
2400 Lake Orange Dr., Suite 150
Orlando, FL 32837
FL COA #0278

WARNING! READ AND FOLLOW ALL NOTES ON THIS DRAWING!
IMPORTANT FURNISH THIS DRAWING TO ALL CONTRACTORS INCLUDING THE INSTALLERS.

Trusses require extreme care in fabricating, handling, shipping, installing and bracing. Refer to and follow the latest edition of BCSI (Building Component Safety Information, by TPI and WTCA) for safety practices pertinent to performing these functions. Installers shall provide temporary bracing per BCSI. Unless noted otherwise, top chord shall have properly attached structural sheathing and bottom chord shall have a properly attached rigid ceiling. Locations shown for permanent lateral restraint of webs shall have bracing installed per BCSI sections B3, B7 or B10, as applicable. Apply plates to each face of truss and position as shown above and/or the Joint Details, unless noted otherwise. Refer to drawings 160A-Z for standard plate positions.

Alpine, a division of ITW Building Components Group Inc. shall not be responsible for any deviation from this drawing, any failure to build the truss in conformance with ANSI/TPI 1, or for handling, shipping, installation & bracing of trusses.

A seal on this drawing or cover page listing this drawing, indicates acceptance of professional engineering responsibility solely for the design shown. The suitability and use of this drawing for any structure is the responsibility of the Building Designer per ANSI/TPI 1 Sec.2.

For more information see this job's general notes page and these web sites:
ALPINE: www.alpineitw.com; TPI: www.tpinst.org; WTCA: www.sbcindustry.com; ICC: www.iccsafe.org

DOUGLAS FLEMING LICENSE No. 66848 STATE OF FLORIDA PROFESSIONAL ENGINEER

TC LL	20.0 PSF	REF	R215-- 83917
TC DL	10.0 PSF	DATE	01/19/17
BC DL	10.0 PSF	DRW	HCUSR215 17019092
BC LL	0.0 PSF	HC-ENG	KD/DF
TOT.LD.	40.0 PSF	SEQN-	462447
DUR.FAC.	1.25	FROM	CDM
SPACING	24.0"	JREF-	1VXM215_Z04

Top chord 2x4 SP M-31
Bot chord 2x4 SP M-31
Webs 2x4 SP M-31

See DWGS S14015ENC100815 & GBLLETIN1014 for gable wind bracing requirements.

Bottom chord checked for 10.00 psf non-concurrent live load.

130 mph wind, 15.00 ft mean hgt, ASCE 7-10, CLOSED bldg, Located anywhere in roof, RISK CAT II, EXP C, wind TC DL=5.0 psf, wind BC DL=5.0 psf. GCpi(+/-)=0.18

Wind loads and reactions based on MWFRS with additional C&C member design.

Deflection meets L/240 live and L/180 total load. Creep increase factor for dead load is 1.50.

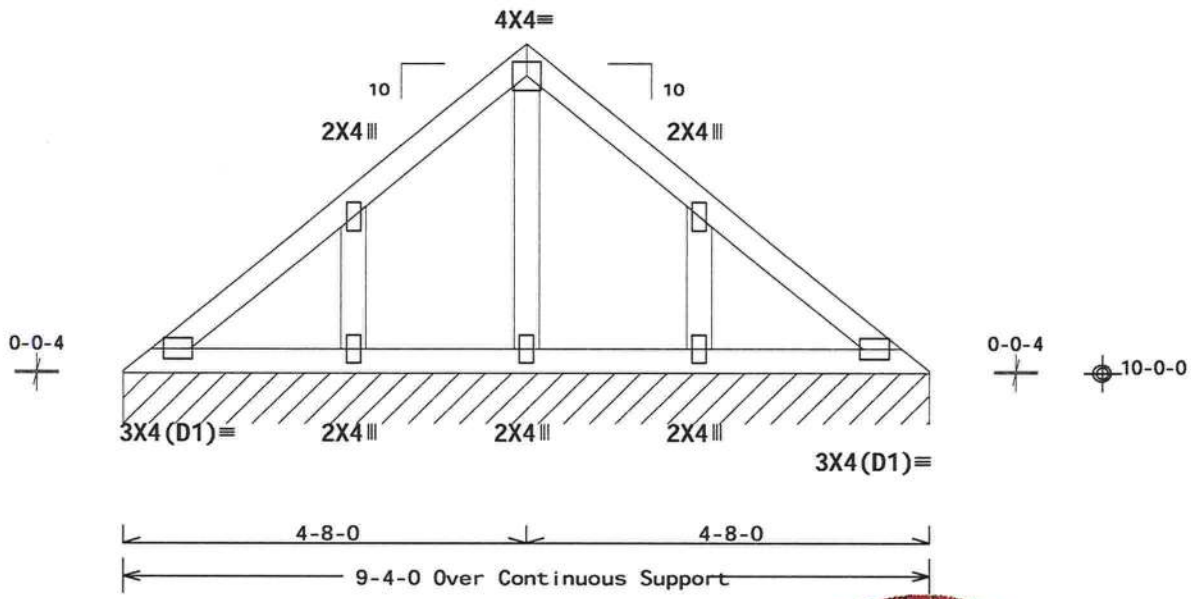

R=86 PLF U=10 PLF W=9-4-0
RL=11/-11 PLF

Design Crit: FBC2014Res/TPI-2007(STD)

PLT TYP. Wave | FT/RT=20%(0%)/10(0) | 16[illegible]01.00.0473.1[illegible] | QTY 1 | [illegible]L/-/1/-/-/R/- | Scale =.5"/Ft.

ALPINE™
AN ITW COMPANY
2400 Lake Orange Dr., Suite 150
Orlando, FL 32837
FL COA #0278

WARNING! READ AND FOLLOW ALL NOTES ON THIS DRAWING!
IMPORTANT FURNISH THIS DRAWING TO ALL CONTRACTORS INCLUDING THE INSTALLERS.

Trusses require extreme care in fabricating, handling, shipping, installing and bracing. Refer to and follow the latest edition of BCSI (Building Component Safety Information, by TPI and WTCA) for safety practices pertinent to performing these functions. Installers shall provide temporary bracing per BCSI. Unless noted otherwise, top chord shall have properly attached structural sheathing and bottom chord shall have a properly attached rigid ceiling. Locations shown for permanent lateral restraint of webs shall have bracing installed per BCSI sections B3, B7 or B10, as applicable. Apply plates to each face of truss and position as shown above and/or the Joint Details, unless noted otherwise. Refer to drawings 160A-Z for standard plate positions.

Alpine, a division of ITW Building Components Group Inc. shall not be responsible for any deviation from this drawing, any failure to build the truss in conformance with ANSI/TPI 1, or for handling, shipping, installation & bracing of trusses.

A seal on this drawing or cover page listing this drawing, indicates acceptance of professional engineering responsibility solely for the design shown. The suitability and use of this drawing for any structure is the responsibility of the Building Designer per ANSI/TPI 1 Sec.2.

For more information see this job's general notes page and these web sites:
ALPINE: www.alpineitw.com; TPI: www.tpinst.org; WTCA: www.sbcindustry.com; ICC: www.iccsafe.org

DOUGLAS FLEMING LICENSE No. 66848 STATE OF FLORIDA PROFESSIONAL ENGINEER

TC LL	20.0 PSF	REF R215-- 83918
TC DL	10.0 PSF	DATE 01/19/17
BC DL	10.0 PSF	DRW HCUSR215 17019093
BC LL	0.0 PSF	HC-ENG KD/DF
TOT.LD.	40.0 PSF	SEQN- 455419
DUR.FAC.	1.25	FROM CDM
SPACING	24.0"	JREF- 1VXM215_Z04

(16-0982-/HUBBART RESIDENCE /SPARKS CONST. -- , FL - R02)

THIS DWG PREPARED FROM COMPUTER INPUT (LOADS & DIMENSIONS) SUBMITTED BY TRUSS MFR.

Top chord 2x4 SP M-31
Bot chord 2x8 SP M-31
Webs 2x4 SP M-31

130 mph wind, 15.00 ft mean hgt, ASCE 7-10, CLOSED bldg, not located within 4.50 ft from roof edge, RISK CAT II, EXP C, wind TC DL=5.0 psf, wind BC DL=5.0 psf. GCpi(+/-)=0.18

Wind loads and reactions based on MWFRS.

Deflection meets L/240 live and L/180 total load. Creep increase factor for dead load is 1.50.

Special loads
------(Lumber Dur.Fac.=1.25 / Plate Dur.Fac.=1.25)
TC- From 66 plf at 0.00 to 66 plf at 4.67
TC- From 66 plf at 4.67 to 66 plf at 10.67
BC- From 20 plf at 0.00 to 20 plf at 9.33
BC- From 5 plf at 9.33 to 5 plf at 10.67
BC- 3162.16 lb Conc. Load at 2.27

Bottom chord checked for 10.00 psf non-concurrent live load.

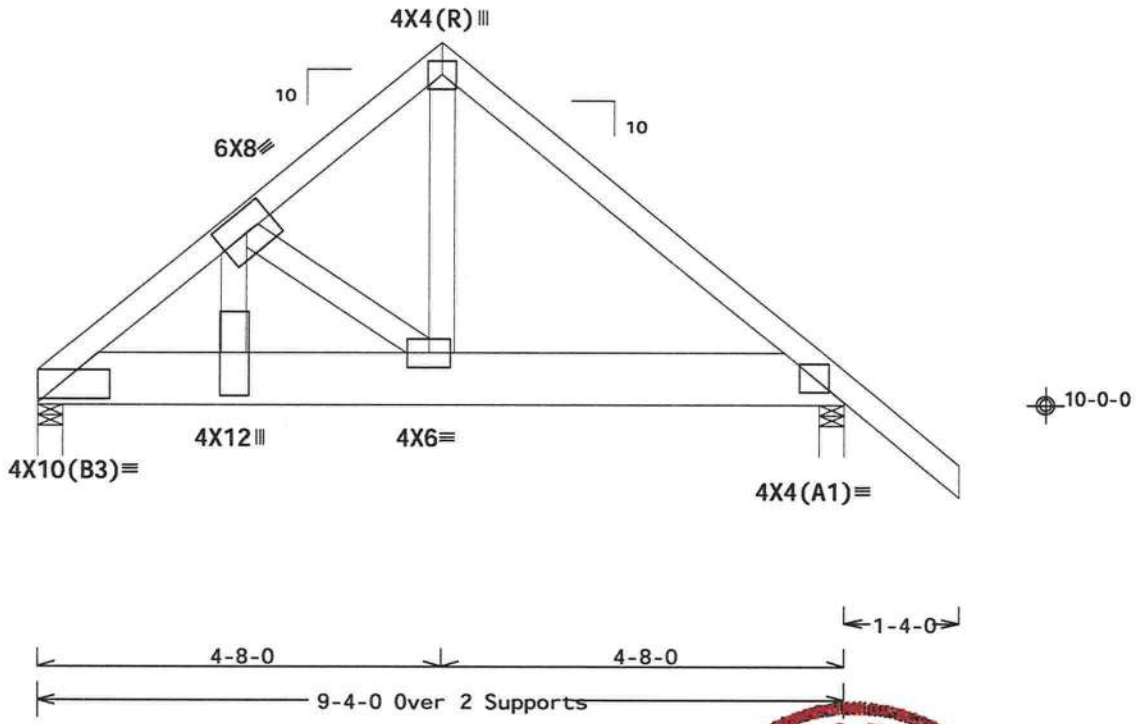

R=2812 U=716 W=3.5"

Design Crit: FBC2014Res/TPI-2007(STD)

PLT TYP. Wave

FT/RT=20%(0%)/10(0) 16.[illegible]1.0G.041[illegible] 17[illegible]TY.1 FL/-/1/-/-/R/- Scale =.5"/Ft.

DOUGLAS FLEMING LICENSE No. 66648 STATE OF FLORIDA PROFESSIONAL ENGINEER

ALPINE™ AN ITW COMPANY

2400 Lake Orange Dr., Suite 150
Orlando, FL 32837
FL COA #0278

WARNING! READ AND FOLLOW ALL NOTES ON THIS DRAWING!
IMPORTANT FURNISH THIS DRAWING TO ALL CONTRACTORS INCLUDING THE INSTALLERS.

Trusses require extreme care in fabricating, handling, shipping, installing and bracing. Refer to and follow the latest edition of BCSI (Building Component Safety Information, by TPI and WTCA) for safety practices prior to performing these functions. Installers shall provide temporary bracing per BCSI. Unless noted otherwise, top chord shall have properly attached structural sheathing and bottom chord shall have a properly attached rigid ceiling. Locations shown for permanent lateral restraint of webs shall have bracing installed per BCSI sections B3, B7 or B10, as applicable. Apply plates to each face of truss and position as shown above and on the Joint Details, unless noted otherwise. Refer to drawings 160A-Z for standard plate positions.

Alpine, a division of ITW Building Components Group Inc. shall not be responsible for any deviation from this drawing, any failure to build the truss in conformance with ANSI/TPI 1, or for handling, shipping, installation & bracing of trusses.

A seal on this drawing or cover page listing this drawing, indicates acceptance of professional engineering responsibility solely for the design shown. The suitability and use of this drawing for any structure is the responsibility of the Building Designer per ANSI/TPI 1 Sec.2.

For more information see this job's general notes page and these web sites:
ALPINE: www.alpineitw.com; TPI: www.tpinst.org; WTCA: www.sbcindustry.com; ICC: www.iccsafe.org

TC LL	20.0 PSF	REF	R215-- 83919
TC DL	10.0 PSF	DATE	01/19/17
BC DL	10.0 PSF	DRW	HCUSR215 17019145
BC LL	0.0 PSF	HC-ENG	KD/DF
TOT.LD.	40.0 PSF	SEQN-	455498
DUR.FAC.	1.25	FROM	CDM
SPACING	24.0"	JREF-	1VXM215_Z04

01/20/2017

(16-0982-/HUBBART RESIDENCE /SPARKS CONST. -- , FL - T01)

Top chord 2x6 SP M-31 :T1 2x4 SP M-31:
Bot chord 2x6 SP M-31
Webs 2x4 SP M-31
:Lt Wedge 2x6 SP M-31:

130 mph wind, 15.00 ft mean hgt, ASCE 7-10, CLOSED bldg, not located within 4.50 ft from roof edge, RISK CAT II, EXP C, wind TC DL=5.0 psf, wind BC DL=5.0 psf. GCpi(+/-)=0.18

Wind loads and reactions based on MWFRS.

H = recommended connection based on manufacturer tested capacities and calculations. Conditions may exist that require different connections than indicated. Refer to manufacturer publication for additional information.

These support conditions used at bearings indicated
(H1) = HUS28 w/ (1)2x8 SP M-31 supporting member.
(22) 0.162"x3.5" nails into supporting member,
(8) 0.162"x3.5" nails into supported member.

In lieu of structural panels use purlins to brace all flat TC @ 24" OC.

Deflection meets L/240 live and L/180 total load. Creep increase factor for dead load is 1.50.

Special loads
------(Lumber Dur.Fac.=1.25 / Plate Dur.Fac.=1.25)
TC- From 66 plf at -1.33 to 66 plf at 7.00
TC- From 33 plf at 7.00 to 33 plf at 22.83
TC- From 33 plf at 22.83 to 33 plf at 27.63
TC- From 33 plf at 27.63 to 33 plf at 29.83
BC- From 5 plf at -1.33 to 5 plf at 0.00
BC- From 20 plf at 0.00 to 20 plf at 7.15
BC- From 10 plf at 7.15 to 10 plf at 17.51
BC- From 10 plf at 17.51 to 10 plf at 29.83
TC- 203.62 lb Conc. Load at 7.06, 9.06,11.06,13.06 14.92,16.77,18.77,20.77,22.77
TC- 21.63 lb Conc. Load at 24.77
TC- 45.50 lb Conc. Load at 26.77,28.77
BC- 606.10 lb Conc. Load at 7.03
BC- 159.46 lb Conc. Load at 9.06,11.06,13.06,14.92 16.77,18.77,20.77,22.77
BC- 261.82 lb Conc. Load at 24.77
BC- 237.95 lb Conc. Load at 26.77,28.77

Right end vertical not exposed to wind pressure.

Bottom chord checked for 10.00 psf non-concurrent live load.

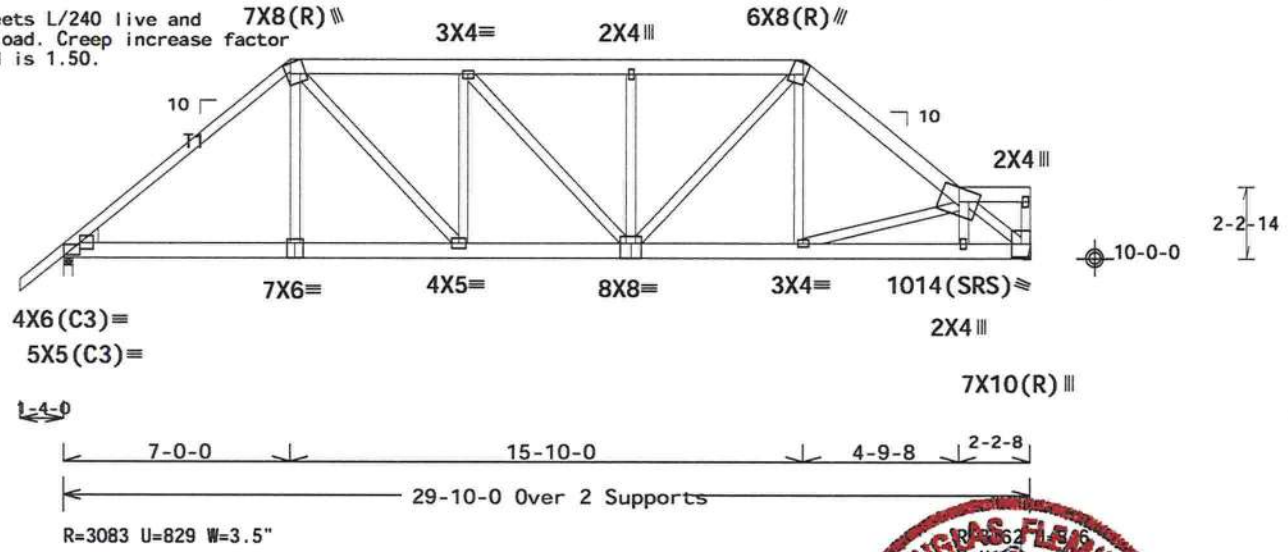

R=3083 U=829 W=3.5"

Design Crit: FBC2014Res/TPI-2007(STD)
PLT TYP. Wave FT/RT=20%(0%)/10(0) 16.11.00.0418.17.06648TY.1 FL -/1/-/-/R/- Scale =.1875"/Ft.

ALPINE AN ITW COMPANY
2400 Lake Orange Dr., Suite 150
Orlando, FL 32837
FL COA #0278

WARNING! READ AND FOLLOW ALL NOTES ON THIS DRAWING!
IMPORTANT FURNISH THIS DRAWING TO ALL CONTRACTORS INCLUDING THE INSTALLERS.

Trusses require extreme care in fabricating, handling, shipping, installing and bracing. Refer to and follow the latest edition of BCSI (Building Component Safety Information, by TPI and WTCA) for safety practices prior to performing these functions. Installers shall provide temporary bracing per BCSI. Unless noted otherwise, top chord shall have properly attached structural sheathing and bottom chord shall have a properly attached rigid ceiling. Locations shown for permanent lateral restraint of webs shall have bracing installed per BCSI sections B3, B7 or B10, as applicable. Apply plates to each face of truss and position as shown above and on the Joint Details, unless noted otherwise. Refer to drawings 160A-Z for standard plate positions.

Alpine, a division of ITW Building Components Group Inc. shall not be responsible for any deviation from this drawing, any failure to build the truss in conformance with ANSI/TPI 1, or for handling, shipping, installation & bracing of trusses.

A seal on this drawing or cover page listing this drawing, indicates acceptance of professional engineering responsibility solely for the design shown. The suitability and use of this drawing for any structure is the responsibility of the Building Designer per ANSI/TPI 1 Sec.2.

For more information see this job's general notes page and these web sites:
ALPINE: www.alpineitw.com; TPI: www.tpinst.org; WTCA: www.sbcindustry.com; ICC: www.iccsafe.org

DOUGLAS FLEMING LICENSE No. 66648 STATE OF FLORIDA PROFESSIONAL ENGINEER

TC LL	20.0 PSF	REF R215-- 83920
TC DL	10.0 PSF	DATE 01/19/17
BC DL	10.0 PSF	DRW HCUSR215 17019142
BC LL	0.0 PSF	HC-ENG KD/DF
TOT.LD.	40.0 PSF	SEQN- 455451
DUR.FAC.	1.25	FROM CDM
SPACING	24.0"	JREF- 1VXM215_Z04

(16-0982-/HUBBART RESIDENCE /SPARKS CONST. -- , FL - T02)

THIS DWG PREPARED FROM COMPUTER INPUT (LOADS & DIMENSIONS) SUBMITTED BY TRUSS MFR.

Top chord 2x4 SP M-31
Bot chord 2x4 SP M-31
Webs 2x4 SP M-31

In lieu of structural panels use purlins to brace all flat TC @ 24" OC.

Bottom chord checked for 10.00 psf non-concurrent live load.

MWFRS loads based on trusses located at least 7.50 ft. from roof edge.

130 mph wind, 15.00 ft mean hgt, ASCE 7-10, CLOSED bldg, not located within 9.00 ft from roof edge, RISK CAT II, EXP C, wind TC DL=5.0 psf, wind BC DL=5.0 psf. GCpi(+/-)=0.18

Wind loads and reactions based on MWFRS with additional C&C member design.

Deflection meets L/240 live and L/180 total load. Creep increase factor for dead load is 1.50.

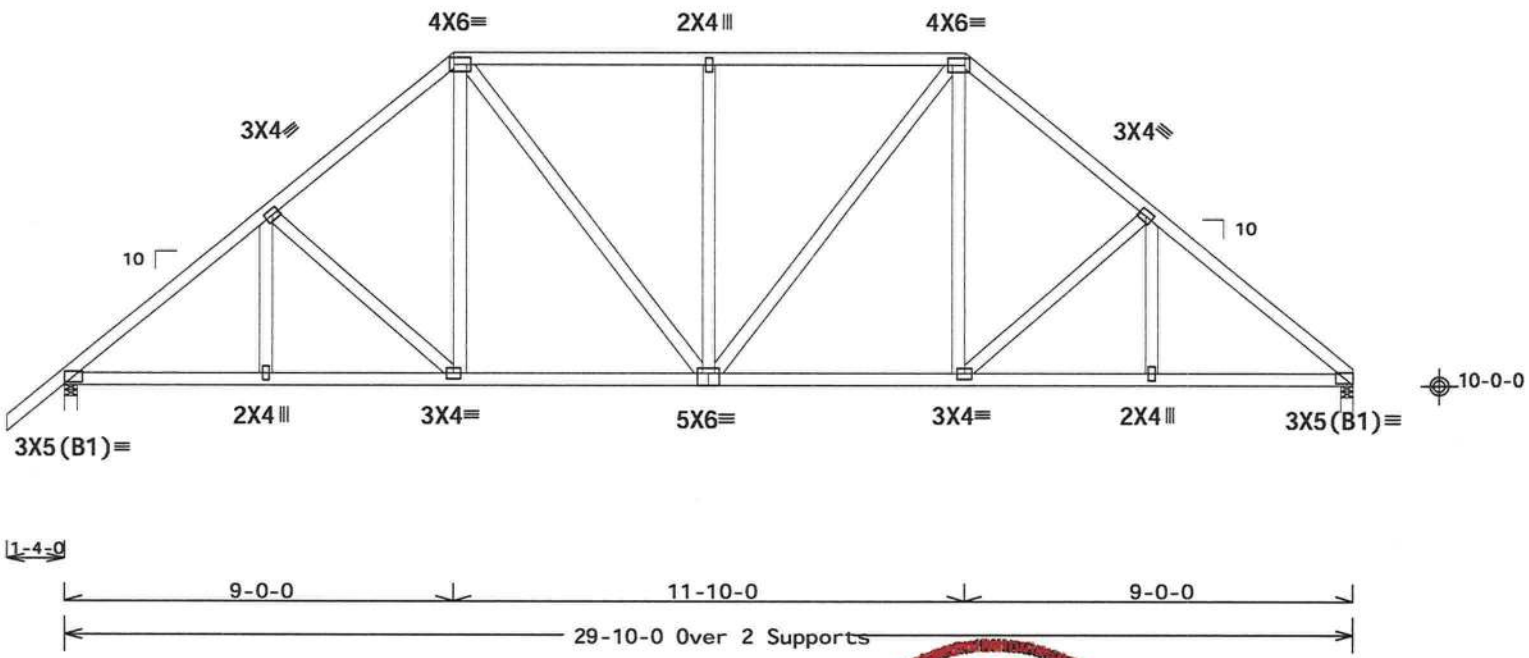

Design Crit: FBC2014Res/TPI-2007(STD)

PLT TYP. Wave

FT/RT=20%(0%)/10(0) 16.[illegible]1.06.0412.1[illegible]TY: [illegible] F[illegible]/-/1/-/-/R/- Scale =.25"/Ft.

DOUGLAS FLEMING LICENSE No. 66848 STATE OF FLORIDA PROFESSIONAL ENGINEER

ALPINE™ AN ITW COMPANY

2400 Lake Orange Dr., Suite 150
Orlando, FL 32837
FL COA #0278

WARNING! READ AND FOLLOW ALL NOTES ON THIS DRAWING!
IMPORTANT FURNISH THIS DRAWING TO ALL CONTRACTORS INCLUDING THE INSTALLERS.

Trusses require extreme care in fabricating, handling, shipping, installing and bracing. Refer to and follow the latest edition of BCSI (Building Component Safety Information, by TPI and WTCA) for safety practices pertinent to performing these functions. Installers shall provide temporary bracing per BCSI. Unless noted otherwise, top chord shall have properly attached structural sheathing and bottom chord shall have a properly attached rigid ceiling. Locations shown for permanent lateral restraint of webs shall have bracing installed per BCSI sections B3, B7 or B10, as applicable. Apply plates to each face of truss and position as shown above and on the Joint Details, unless noted otherwise. Refer to drawings 160A-Z for standard plate positions.

Alpine, a division of ITW Building Components Group Inc. shall not be responsible for any deviation from this drawing, any failure to build the truss in conformance with ANSI/TPI 1, or for handling, shipping, installation & bracing of trusses.

A seal on this drawing or cover page listing this drawing, indicates acceptance of professional engineering responsibility solely for the design shown. The suitability and use of this drawing for any structure is the responsibility of the Building Designer per ANSI/TPI 1 Sec.2.

For more information see this job's general notes page and these web sites:
ALPINE: www.alpineitw.com; TPI: www.tpinst.org; WTCA: www.sbcindustry.com; ICC: www.iccsafe.org

TC LL	20.0 PSF	REF R215-- 83921
TC DL	10.0 PSF	DATE 01/19/17
BC DL	10.0 PSF	DRW HCUSR215 17019119
BC LL	0.0 PSF	HC-ENG KD/DF
TOT.LD.	40.0 PSF	SEQN- 455417
DUR.FAC.	1.25	FROM CDM
SPACING	24.0"	JREF- 1VXM215_Z04

01/20/2017

(16-0982-/HUBBART RESIDENCE /SPARKS CONST. -- , FL - T03)

THIS DWG PREPARED FROM COMPUTER INPUT (LOADS & DIMENSIONS) SUBMITTED BY TRUSS MFR.

Top chord 2x4 SP M-31
Bot chord 2x4 SP M-31
Webs 2x4 SP M-31

(a) Continuous lateral restraint equally spaced on member.

In lieu of structural panels use purlins to brace all flat TC @ 24" OC.

Deflection meets L/240 live and L/180 total load. Creep increase factor for dead load is 1.50.

130 mph wind, 15.00 ft mean hgt, ASCE 7-10, CLOSED bldg, not located within 9.00 ft from roof edge, RISK CAT II, EXP C, wind TC DL=5.0 psf, wind BC DL=5.0 psf. GCpi(+/-)=0.18

Wind loads and reactions based on MWFRS with additional C&C member design.

Bottom chord checked for 10.00 psf non-concurrent live load.

MWFRS loads based on trusses located at least 7.50 ft. from roof edge.

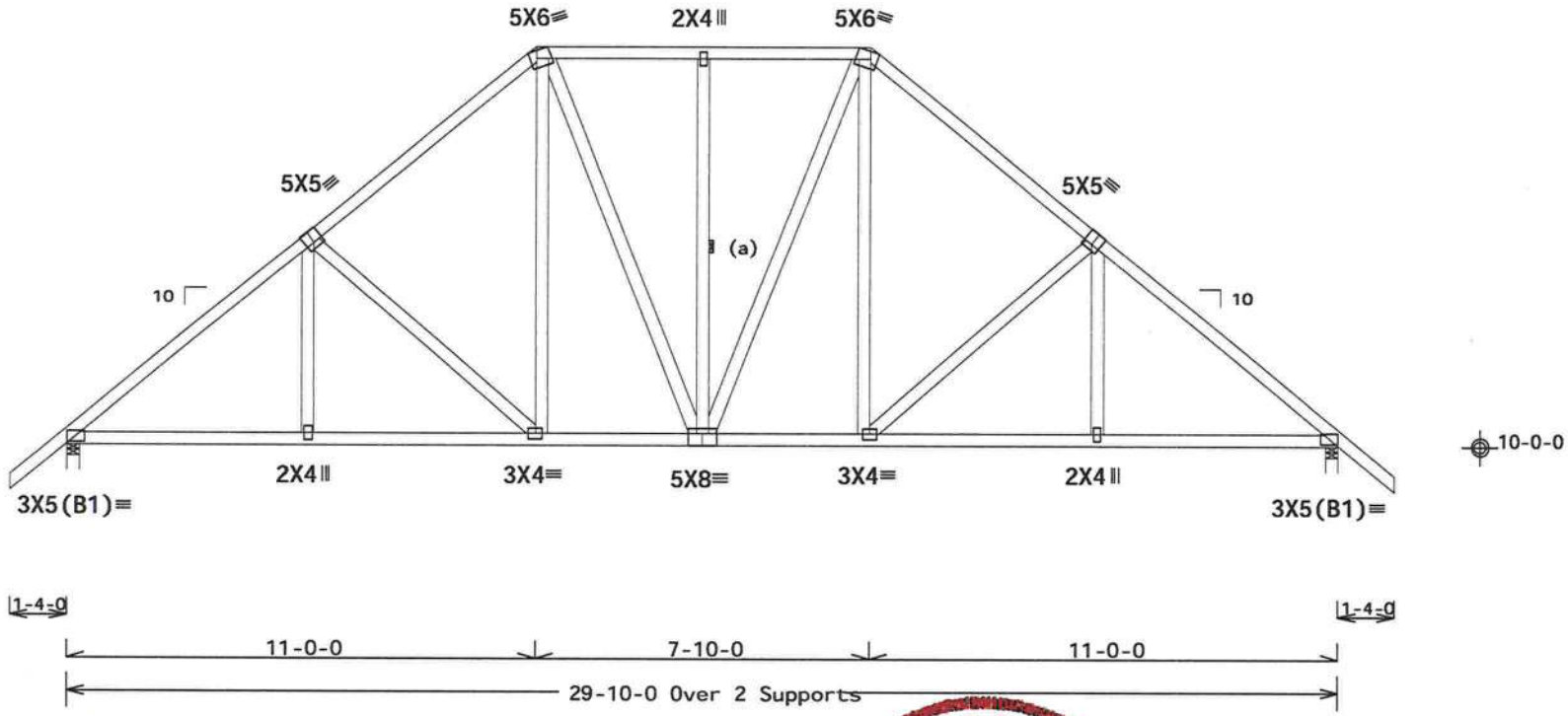

Design Crit: FBC2014Res/TPI-2007(STD)
FT/RT=20%(0%)/10(0) 16.[illegible]1.0[illegible]0412 17[illegible]TY: 2 F[illegible]/-/1/-/-/R/-

PLT TYP. Wave

Scale =.25"/Ft.

DOUGLAS FLEMING LICENSE No. 66848 STATE OF FLORIDA PROFESSIONAL ENGINEER

ALPINE™ AN ITW COMPANY
2400 Lake Orange Dr., Suite 150
Orlando, FL 32837
FL COA #0278

WARNING! READ AND FOLLOW ALL NOTES ON THIS DRAWING!
IMPORTANT FURNISH THIS DRAWING TO ALL CONTRACTORS INCLUDING THE INSTALLERS.

Trusses require extreme care in fabricating, handling, shipping, installing and bracing. Refer to and fol[illegible] the latest edition of BCSI (Building Component Safety Information, by TPI and WTCA) for safety practices pr[illegible] to performing these functions. Installers shall provide temporary bracing per BCSI. Unless noted otherwis[illegible] top chord shall have properly attached structural sheathing and bottom chord shall have a properly attached [illegible] rigid ceiling. Locations shown for permanent lateral restraint of webs shall have bracing installed per BCS[illegible] sections B3, B7 or B10, as applicable. Apply plates to each face of truss and position as shown above and on [illegible] the Joint Details, unless noted otherwise. Refer to drawings 160A-Z for standard plate positions.

Alpine, a division of ITW Building Components Group Inc. shall not be responsible for any deviation from this drawing, any failure to build the truss in conformance with ANSI/TPI 1, or for handling, shipping, installation & bracing of trusses.

A seal on this drawing or cover page listing this drawing, indicates acceptance of professional engineering responsibility solely for the design shown. The suitability and use of this drawing for any structure is the responsibility of the Building Designer per ANSI/TPI 1 Sec.2.

For more information see this job's general notes page and these web sites:
ALPINE: www.alpineitw.com; TPI: www.tpinst.org; WTCA: www.sbcindustry.com; ICC: www.iccsafe.org

TC LL	20.0 PSF	REF	R215-- 83922
TC DL	10.0 PSF	DATE	01/19/17
BC DL	10.0 PSF	DRW	HCUSR215 17019120
BC LL	0.0 PSF	HC-ENG	KD/DF
TOT.LD.	40.0 PSF	SEQN-	455416
DUR.FAC.	1.25	FROM	CDM
SPACING	24.0"	JREF-	1VXM215_Z04

01/20/2017

(16-0982-/HUBBART RESIDENCE /SPARKS CONST. -- , FL - T04)

THIS DWG PREPARED FROM COMPUTER INPUT (LOADS & DIMENSIONS) SUBMITTED BY TRUSS MFR.

Top chord 2x4 SP M-31
Bot chord 2x4 SP M-31
Webs 2x4 SP M-31

H = recommended connection based on manufacturer tested capacities and calculations. Conditions may exist that require different connections than indicated. Refer to manufacturer publication for additional information.

(a) Continuous lateral restraint equally spaced on member.

In lieu of structural panels use purlins to brace all flat TC @ 24" OC.

Deflection meets L/240 live and L/180 total load. Creep increase factor for dead load is 1.50.

130 mph wind, 15.26 ft mean hgt, ASCE 7-10, CLOSED bldg, not located within 9.00 ft from roof edge, RISK CAT II, EXP C, wind TC DL=5.0 psf, wind BC DL=5.0 psf. GCpi(+/-)=0.18

Wind loads and reactions based on MWFRS with additional C&C member design.

These support conditions used at bearings indicated
(H1) = HUS26 w/ (1)2x6 SP M-31 supporting member.
(14) 0.148"x3" nails into supporting member,
(4) 0.148"x3" nails into supported member.

Bottom chord checked for 10.00 psf non-concurrent live load.

MWFRS loads based on trusses located at least 7.63 ft. from roof edge.

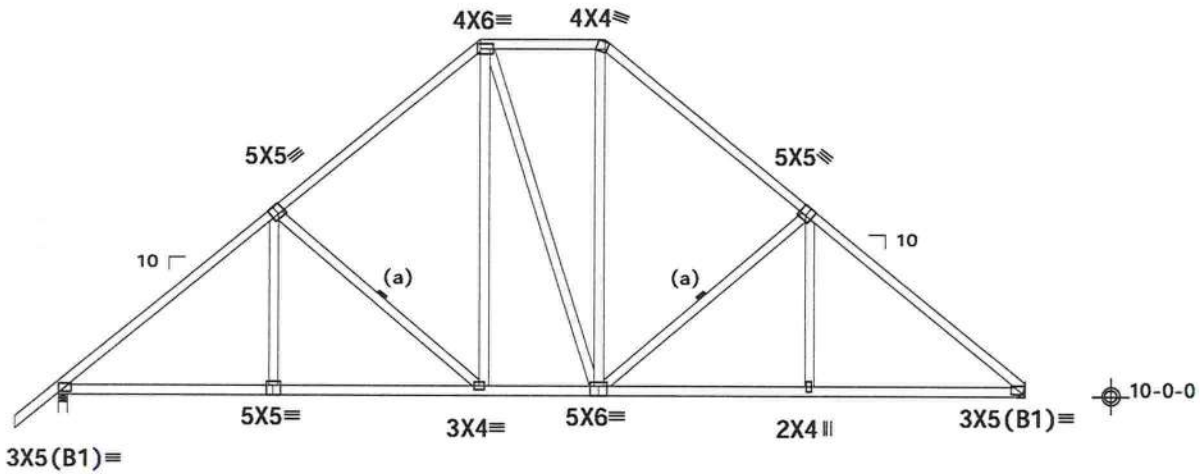

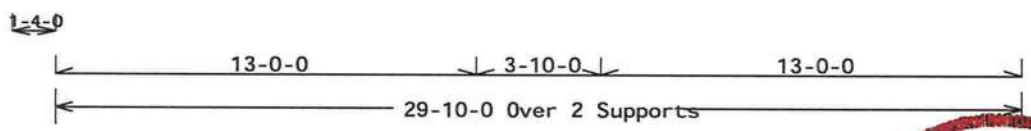

R=1382 U=210 W=3.5"
RL=347/-367

Design Crit: FBC2014Res/TPI-2007(STD)
PLT TYP. Wave FT/RT=20%(0%)/10(0) 16.1.09.0413.1 QTY: 2 F/-/1/-/-/R/- Scale =.1875"/Ft.

DOUGLAS FLEMING LICENSE No.66848 STATE OF FLORIDA PROFESSIONAL ENGINEER

ALPINE™ AN ITW COMPANY
2400 Lake Orange Dr., Suite 150
Orlando, FL 32837
FL COA #0278

WARNING! READ AND FOLLOW ALL NOTES ON THIS DRAWING!
IMPORTANT FURNISH THIS DRAWING TO ALL CONTRACTORS INCLUDING THE INSTALLERS.

Trusses require extreme care in fabricating, handling, shipping, installing and bracing. Refer to and follow the latest edition of BCSI (Building Component Safety Information, by TPI and WTCA) for safety practices pertinent to performing these functions. Installers shall provide temporary bracing per BCSI. Unless noted otherwise, top chord shall have properly attached structural sheathing and bottom chord shall have a properly attached rigid ceiling. Locations shown for permanent lateral restraint of webs shall have bracing installed per BCSI sections B3, B7 or B10, as applicable. Apply plates to each face of truss and position as shown above and on the Joint Details, unless noted otherwise. Refer to drawings 160A-Z for standard plate positions.

Alpine, a division of ITW Building Components Group Inc. shall not be responsible for any deviation from this drawing, any failure to build the truss in conformance with ANSI/TPI 1, or for handling, shipping, installation & bracing of trusses.

A seal on this drawing or cover page listing this drawing, indicates acceptance of professional engineering responsibility solely for the design shown. The suitability and use of this drawing for any structure is the responsibility of the Building Designer per ANSI/TPI 1 Sec.2.

For more information see this job's general notes page and these web sites:
ALPINE: www.alpineitw.com; TPI: www.tpinst.org; WTCA: www.sbcindustry.com; ICC: www.iccsafe.org

TC LL	20.0 PSF	REF	R215-- 83923
TC DL	10.0 PSF	DATE	01/19/17
BC DL	10.0 PSF	DRW	HCUSR215 17019121
BC LL	0.0 PSF	HC-ENG	KD/DF
TOT.LD.	40.0 PSF	SEQN-	455415
DUR.FAC.	1.25	FROM	CDM
SPACING	24.0"	JREF-	1VXM215_Z04

01/20/2017

(16-0982-/HUBBART RESIDENCE /SPARKS CONST. -- , FL - T05)

THIS DWG PREPARED FROM COMPUTER INPUT (LOADS & DIMENSIONS) SUBMITTED BY TRUSS MFR.

Top chord 2x4 SP M-31
Bot chord 2x4 SP M-31
Webs 2x4 SP M-31

130 mph wind, 15.00 ft mean hgt, ASCE 7-10, CLOSED bldg, not located within 4.50 ft from roof edge, RISK CAT II, EXP C, wind TC DL=5.0 psf, wind BC DL=5.0 psf. GCpi(+/-)=0.18

Wind loads and reactions based on MWFRS.

In lieu of structural panels use purlins to brace all flat TC @ 24" OC.

Bottom chord checked for 10.00 psf non-concurrent live load.

Deflection meets L/240 live and L/180 total load. Creep increase factor for dead load is 1.50.

Special loads
------(Lumber Dur.Fac.=1.25 / Plate Dur.Fac.=1.25)

TC- From	66 plf at	-1.33 to	66 plf at	6.28
TC- From	66 plf at	6.28 to	66 plf at	12.32
TC- From	66 plf at	12.32 to	66 plf at	17.51
TC- From	66 plf at	17.51 to	66 plf at	28.83
TC- From	66 plf at	28.83 to	66 plf at	30.33
TC- From	66 plf at	30.33 to	66 plf at	32.67
BC- From	5 plf at	-1.33 to	5 plf at	0.00
BC- From	20 plf at	0.00 to	20 plf at	6.32
BC- From	20 plf at	6.32 to	20 plf at	17.37
BC- From	20 plf at	17.37 to	20 plf at	29.90
BC- From	10 plf at	29.90 to	10 plf at	31.33
BC- From	5 plf at	31.33 to	5 plf at	32.67

TC- 88.64 lb Conc. Load at 29.90
TC- -38.72 lb Conc. Load at 30.29
BC- 321.57 lb Conc. Load at 29.90
BC- 20.97 lb Conc. Load at 30.29

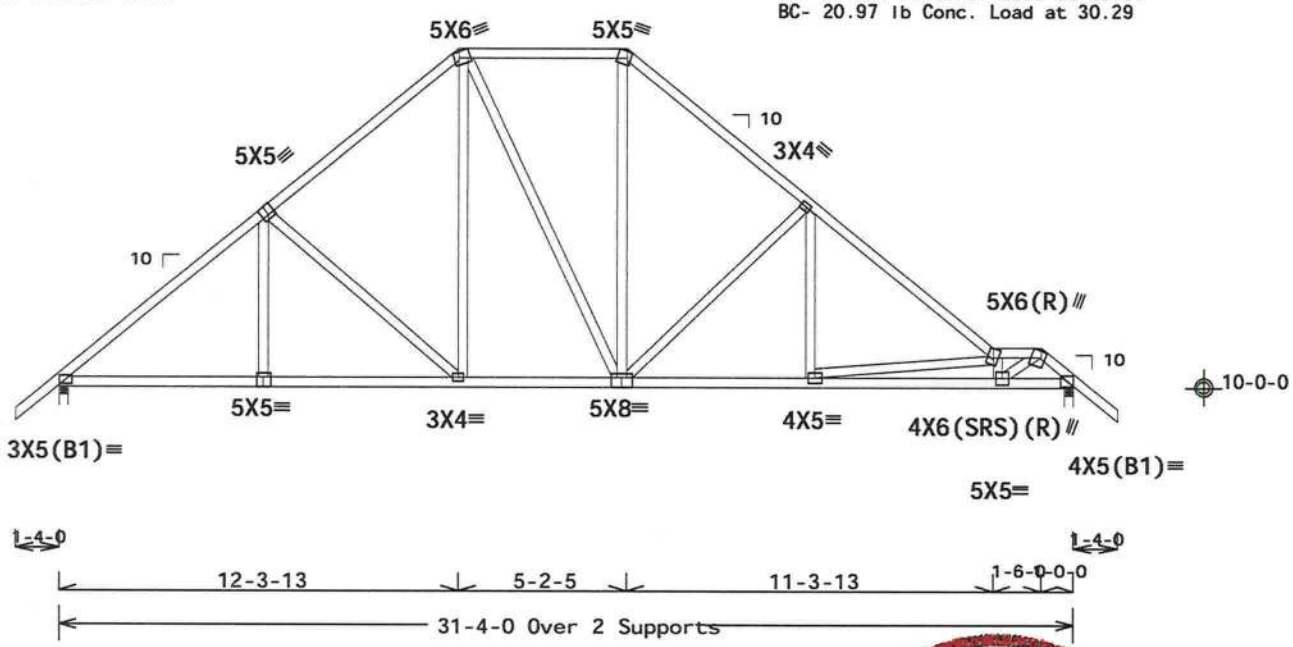

Design Crit: FBC2014Res/TPI-2007(STD)

PLT TYP. Wave — FT/RT=20%(0%)/10(0) — 16.01.09.10413.17 — QTY:1 — F/-/1/-/-/R/- — Scale =.1875"/Ft.

ALPINE™ AN ITW COMPANY
2400 Lake Orange Dr., Suite 150
Orlando, FL 32837
FL COA #0278

WARNING! READ AND FOLLOW ALL NOTES ON THIS DRAWING!
IMPORTANT FURNISH THIS DRAWING TO ALL CONTRACTORS INCLUDING THE INSTALLERS.

Trusses require extreme care in fabricating, handling, shipping, installing and bracing. Refer to and follow the latest edition of BCSI (Building Component Safety Information, by TPI and WTCA) for safety practices prior to performing these functions. Installers shall provide temporary bracing per BCSI. Unless noted otherwise, top chord shall have properly attached structural sheathing and bottom chord shall have a properly attached rigid ceiling. Locations shown for permanent lateral restraint of webs shall have bracing installed per BCSI sections B3, B7 or B10, as applicable. Apply plates to each face of truss and position as shown above and on the Joint Details, unless noted otherwise. Refer to drawings 160A-Z for standard plate positions.

Alpine, a division of ITW Building Components Group Inc. shall not be responsible for any deviation from this drawing, any failure to build the truss in conformance with ANSI/TPI 1, or for handling, shipping, installation & bracing of trusses.

A seal on this drawing or cover page listing this drawing, indicates acceptance of professional engineering responsibility solely for the design shown. The suitability and use of this drawing for any structure is the responsibility of the Building Designer per ANSI/TPI 1 Sec.2.

For more information see this job's general notes page and these web sites:
ALPINE: www.alpineitw.com; TPI: www.tpinst.org; WTCA: www.sbcindustry.com; ICC: www.iccsafe.org

DOUGLAS FLEMING LICENSE No.66848 STATE OF FLORIDA PROFESSIONAL ENGINEER

TC LL	20.0 PSF	REF R215-- 83924
TC DL	10.0 PSF	DATE 01/19/17
BC DL	10.0 PSF	DRW HCUSR215 17019122
BC LL	0.0 PSF	HC-ENG KD/DF
TOT.LD.	40.0 PSF	SEQN- 455430
DUR.FAC.	1.25	FROM CDM
SPACING	24.0"	JREF- 1VXM215_Z04

01/20/2017

(16-0982-/HUBBART RESIDENCE /SPARKS CONST. -- , FL - T06)

THIS DWG PREPARED FROM COMPUTER INPUT (LOADS & DIMENSIONS) SUBMITTED BY TRUSS MFR.

Top chord 2x4 SP M-31
Bot chord 2x4 SP M-31
Webs 2x4 SP M-31

In lieu of structural panels use purlins to brace all flat TC @ 24" OC.

Bottom chord checked for 10.00 psf non-concurrent live load.

MWFRS loads based on trusses located at least 15.00 ft. from roof edge.

130 mph wind, 15.00 ft mean hgt, ASCE 7-10, CLOSED bldg, not located within 9.00 ft from roof edge, RISK CAT II, EXP C, wind TC DL=5.0 psf, wind BC DL=5.0 psf. GCpi(+/-)=0.18

Wind loads and reactions based on MWFRS with additional C&C member design.

Deflection meets L/240 live and L/180 total load. Creep increase factor for dead load is 1.50.

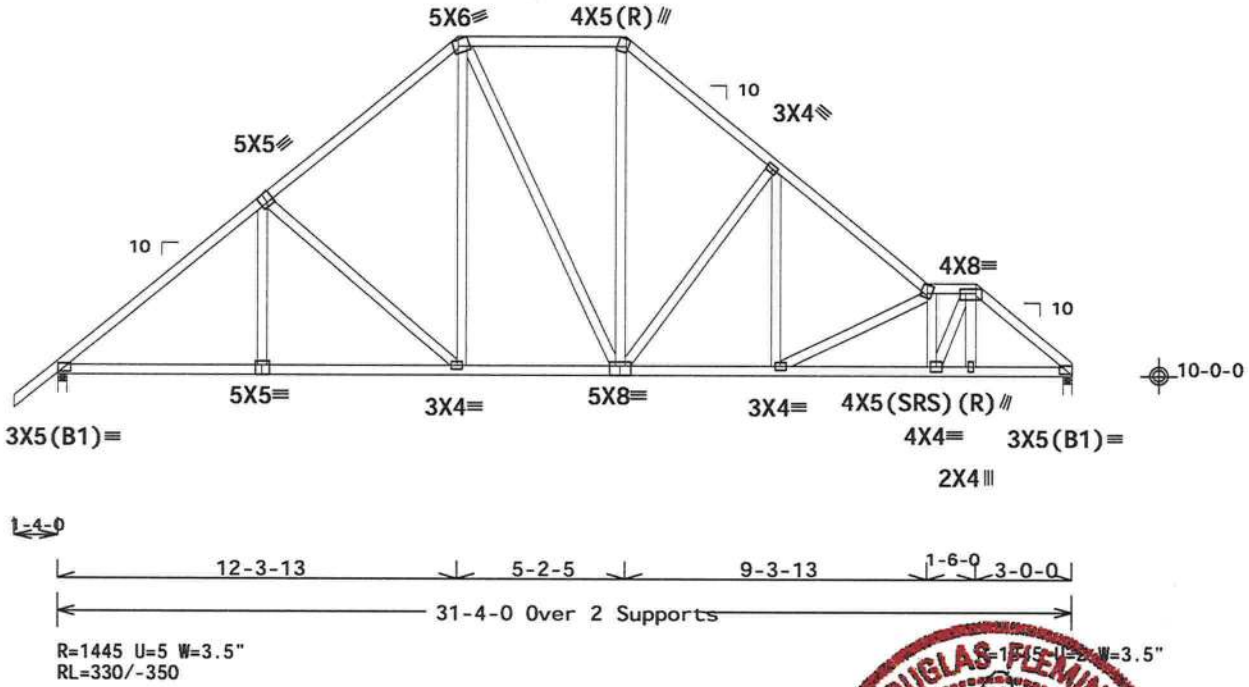

Design Crit: FBC2014Res/TPI-2007(STD)

PLT TYP. Wave FT/RT=20%(0%)/10(0) 16 01.09 0413.17 QTY: 1 P1/-/1/-/-/R/- Scale =.1875"/Ft.

TC LL	20.0 PSF
TC DL	10.0 PSF
BC DL	10.0 PSF
BC LL	0.0 PSF
TOT.LD.	40.0 PSF
DUR.FAC.	1.25
SPACING	24.0"

REF	R215-- 83925
DATE	01/19/17
DRW	HCUSR215 17019123
HC-ENG	KD/DF
SEQN-	455409
FROM	CDM
JREF-	1VXM215_Z04

ALPINE™ AN ITW COMPANY

2400 Lake Orange Dr., Suite 150
Orlando, FL 32837
FL COA #0278

WARNING! READ AND FOLLOW ALL NOTES ON THIS DRAWING!
IMPORTANT FURNISH THIS DRAWING TO ALL CONTRACTORS INCLUDING THE INSTALLERS.

Trusses require extreme care in fabricating, handling, shipping, installing and bracing. Refer to and follow the latest edition of BCSI (Building Component Safety Information, by TPI and WTCA) for safety practices pertinent to performing these functions. Installers shall provide temporary bracing per BCSI. Unless noted otherwise, top chord shall have properly attached structural sheathing and bottom chord shall have a properly attached rigid ceiling. Locations shown for permanent lateral restraint of webs shall have bracing installed per BCSI sections B3, B7 or B10, as applicable. Apply plates to each face of truss and position as shown above and on the Joint Details, unless noted otherwise. Refer to drawings 160A-Z for standard plate positions.

Alpine, a division of ITW Building Components Group Inc. shall not be responsible for any deviation from this drawing, any failure to build the truss in conformance with ANSI/TPI 1, or for handling, shipping, installation & bracing of trusses.

A seal on this drawing or cover page listing this drawing, indicates acceptance of professional engineering responsibility solely for the design shown. The suitability and use of this drawing for any structure is the responsibility of the Building Designer per ANSI/TPI 1 Sec.2.

For more information see this job's general notes page and these web sites:
ALPINE: www.alpineitw.com; TPI: www.tpinst.org; WTCA: www.sbcindustry.com; ICC: www.iccsafe.org

DOUGLAS FLEMING LICENSE No. 66848 STATE OF FLORIDA PROFESSIONAL ENGINEER

01/20/2017

(16-0982-/HUBBART RESIDENCE /SPARKS CONST. -- , FL - T07)

THIS DWG PREPARED FROM COMPUTER INPUT (LOADS & DIMENSIONS) SUBMITTED BY TRUSS MFR.

Top chord 2x4 SP M-31
Bot chord 2x4 SP M-31
Webs 2x4 SP M-31

(J) Hanger Support Required, by others

(a) Continuous lateral restraint equally spaced on member.

Bottom chord checked for 10.00 psf non-concurrent live load.

Deflection meets L/240 live and L/180 total load. Creep increase factor for dead load is 1.50.

130 mph wind, 15.00 ft mean hgt, ASCE 7-10, CLOSED bldg, not located within 9.00 ft from roof edge, RISK CAT II, EXP C, wind TC DL=5.0 psf, wind BC DL=5.0 psf. GCpi(+/-)=0.18

Wind loads and reactions based on MWFRS with additional C&C member design.

In lieu of structural panels use purlins to brace all flat TC @ 24" OC.

MWFRS loads based on trusses located at least 15.00 ft. from roof edge.

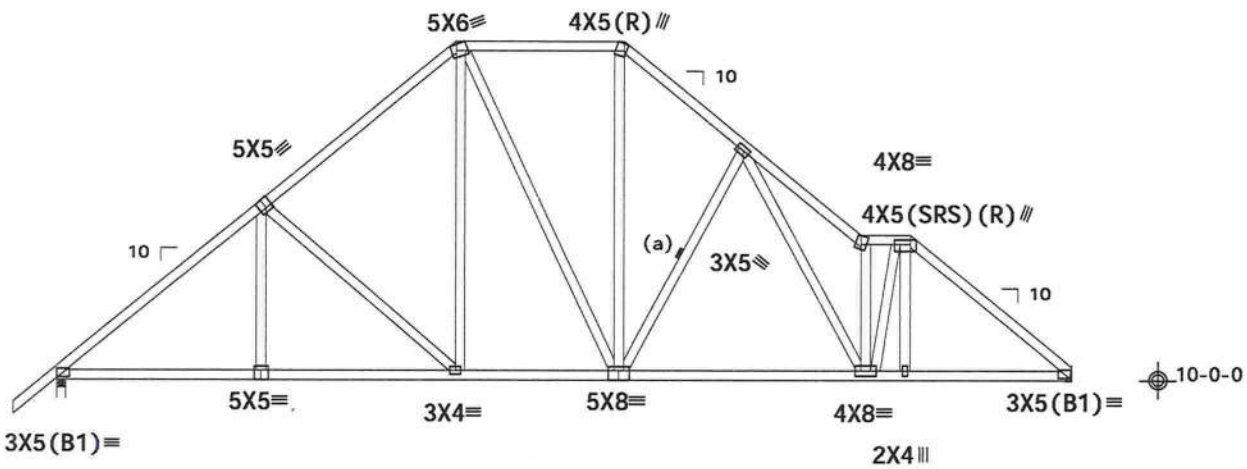

R=1446 U=5 W=3.5"
RL=330/-350

Design Crit: FBC2014Res/TPI-2007(STD)

PLT TYP. Wave — FT/RT=20%(0%)/10(0) — 16 01.00.0413.17 — QTY:1 — R/-/1/-/-/R/- — Scale =.1875"/Ft.

DOUGLAS FLEMING LICENSE No. 66846 STATE OF FLORIDA PROFESSIONAL ENGINEER

ALPINE™ AN ITW COMPANY

2400 Lake Orange Dr., Suite 150
Orlando, FL 32837
FL COA #0278

WARNING! READ AND FOLLOW ALL NOTES ON THIS DRAWING!
IMPORTANT FURNISH THIS DRAWING TO ALL CONTRACTORS INCLUDING THE INSTALLERS.

Trusses require extreme care in fabricating, handling, shipping, installing and bracing. Refer to and follow the latest edition of BCSI (Building Component Safety Information, by TPI and WTCA) for safety practices pertinent to performing these functions. Installers shall provide temporary bracing per BCSI. Unless noted otherwise, top chord shall have properly attached structural sheathing and bottom chord shall have a properly attached rigid ceiling. Locations shown for permanent lateral restraint of webs shall have bracing installed per BCSI sections B3, B7 or B10, as applicable. Apply plates to each face of truss and position as shown above and/or the Joint Details, unless noted otherwise. Refer to drawings 160A-Z for standard plate positions.

Alpine, a division of ITW Building Components Group Inc. shall not be responsible for any deviation from this drawing, any failure to build the truss in conformance with ANSI/TPI 1, or for handling, shipping, installation & bracing of trusses.

A seal on this drawing or cover page listing this drawing, indicates acceptance of professional engineering responsibility solely for the design shown. The suitability and use of this drawing for any structure is the responsibility of the Building Designer per ANSI/TPI 1 Sec.2.

For more information see this job's general notes page and these web sites:
ALPINE: www.alpineitw.com; TPI: www.tpinst.org; WTCA: www.sbcindustry.com; ICC: www.iccsafe.org

TC LL	20.0 PSF	REF R215-- 83926
TC DL	10.0 PSF	DATE 01/19/17
BC DL	10.0 PSF	DRW HCUSR215 17019124
BC LL	0.0 PSF	HC-ENG KD/DF
TOT.LD.	40.0 PSF	SEQN- 455410
DUR.FAC.	1.25	FROM CDM
SPACING	24.0"	JREF- 1VXM215_Z04

(16-0982-/HUBBART RESIDENCE /SPARKS CONST. -- , FL - T08)

Top chord 2x4 SP M-31
Bot chord 2x4 SP M-31
Webs 2x4 SP M-31

(J) Hanger Support Required, by others

In lieu of structural panels use purlins to brace all flat TC @ 24" OC.

Deflection meets L/240 live and L/180 total load. Creep increase factor for dead load is 1.50.

130 mph wind, 15.00 ft mean hgt, ASCE 7-10, CLOSED bldg, not located within 9.00 ft from roof edge, RISK CAT II, EXP C, wind TC DL=5.0 psf, wind BC DL=5.0 psf. GCpi(+/-)=0.18

Wind loads and reactions based on MWFRS with additional C&C member design.

Bottom chord checked for 10.00 psf non-concurrent live load.

MWFRS loads based on trusses located at least 15.00 ft. from roof edge.

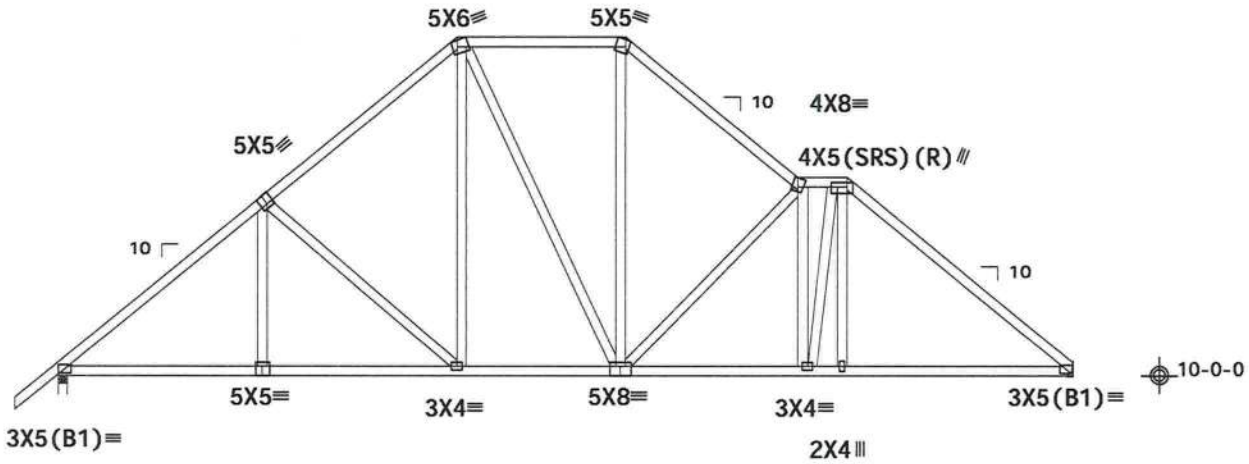

R=1446 U=6 W=3.5"
RL=330/-350

Design Crit: FBC2014Res/TPI-2007(STD)

PLT TYP. Wave FT/RT=20%(0%)/10(0) 16 01.00.0413.17 QTY:1 L/-/1/-/-/R/- Scale =.1875"/Ft.

ALPINE™ AN ITW COMPANY
2400 Lake Orange Dr., Suite 150
Orlando, FL 32837
FL COA #0278

WARNING! READ AND FOLLOW ALL NOTES ON THIS DRAWING!
IMPORTANT FURNISH THIS DRAWING TO ALL CONTRACTORS INCLUDING THE INSTALLERS.

Trusses require extreme care in fabricating, handling, shipping, installing and bracing. Refer to and follow the latest edition of BCSI (Building Component Safety Information, by TPI and WTCA) for safety practices pertinent to performing these functions. Installers shall provide temporary bracing per BCSI. Unless noted otherwise, top chord shall have properly attached structural sheathing and bottom chord shall have a properly attached rigid ceiling. Locations shown for permanent lateral restraint of webs shall have bracing installed per BCSI sections B3, B7 or B10, as applicable. Apply plates to each face of truss and position as shown above and on the Joint Details, unless noted otherwise. Refer to drawings 160A-Z for standard plate positions.

Alpine, a division of ITW Building Components Group Inc. shall not be responsible for any deviation from this drawing, any failure to build the truss in conformance with ANSI/TPI 1, or for handling, shipping, installation & bracing of trusses.

A seal on this drawing or cover page listing this drawing, indicates acceptance of professional engineering responsibility solely for the design shown. The suitability and use of this drawing for any structure is the responsibility of the Building Designer per ANSI/TPI 1 Sec.2.

For more information see this job's general notes page and these web sites:
ALPINE: www.alpineitw.com; TPI: www.tpinst.org; WTCA: www.sbcindustry.com; ICC: www.iccsafe.org

DOUGLAS FLEMING LICENSE No. 66646 STATE OF FLORIDA PROFESSIONAL ENGINEER

TC LL	20.0 PSF	REF R215-- 83927
TC DL	10.0 PSF	DATE 01/19/17
BC DL	10.0 PSF	DRW HCUSR215 17019067
BC LL	0.0 PSF	HC-ENG KD/DF
TOT.LD.	40.0 PSF	SEQN- 455411
DUR.FAC.	1.25	FROM CDM
SPACING	24.0"	JREF- 1VXM215_Z04

01/20/2017

(16-0982-/HUBBART RESIDENCE /SPARKS CONST. -- , FL - T09)

THIS DWG PREPARED FROM COMPUTER INPUT (LOADS & DIMENSIONS) SUBMITTED BY TRUSS MFR.

Top chord 2x4 SP M-31
Bot chord 2x4 SP M-31
Webs 2x4 SP M-31

(a) Continuous lateral restraint equally spaced on member.

In lieu of structural panels use purlins to brace all flat TC @ 24" OC.

Deflection meets L/240 live and L/180 total load. Creep increase factor for dead load is 1.50.

130 mph wind, 15.53 ft mean hgt, ASCE 7-10, CLOSED bldg, not located within 9.00 ft from roof edge, RISK CAT II, EXP C, wind TC DL=5.0 psf, wind BC DL=5.0 psf. GCpi(+/-)=0.18

Wind loads and reactions based on MWFRS with additional C&C member design.

Bottom chord checked for 10.00 psf non-concurrent live load.

MWFRS loads based on trusses located at least 15.53 ft. from roof edge.

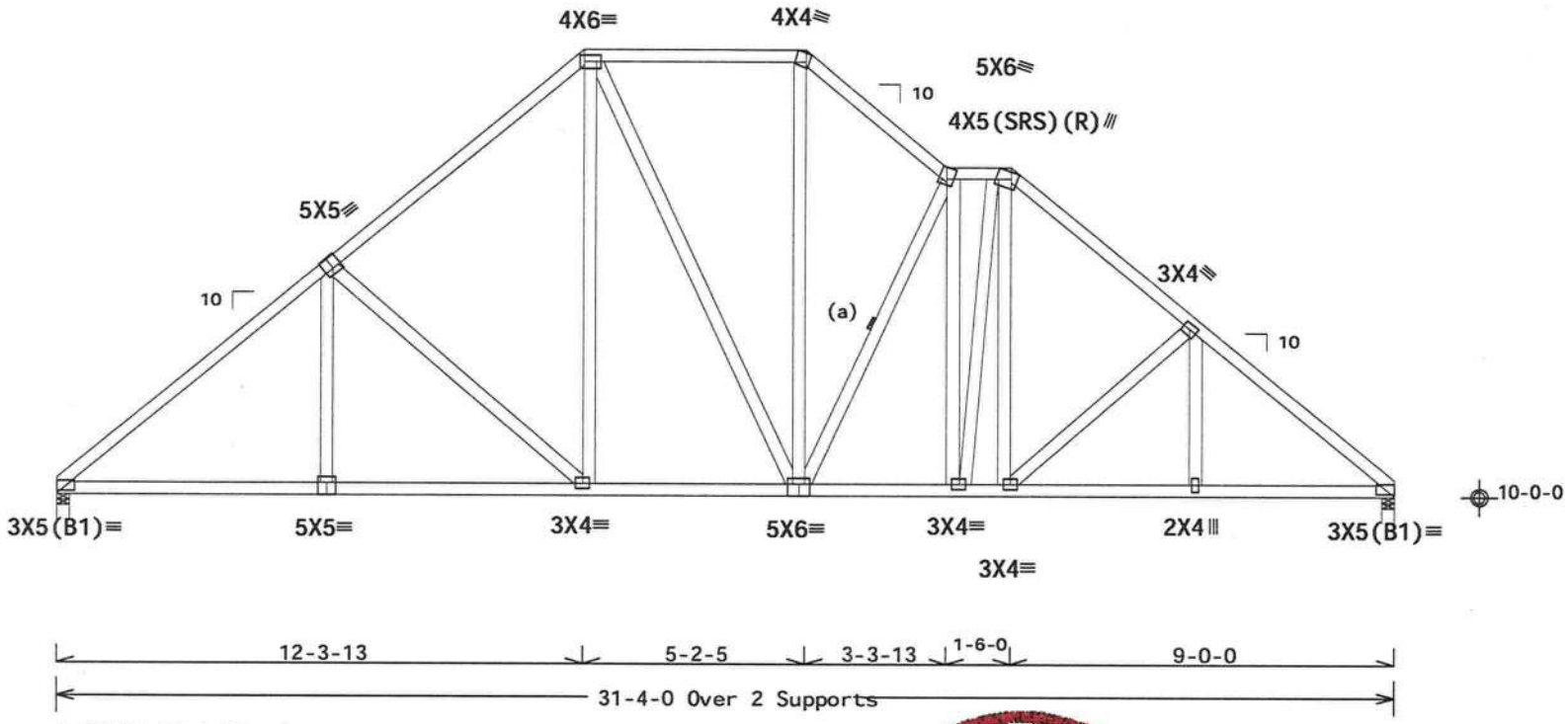

R=1348 U=4 W=3.5"
RL=310/-309

R=1348 U=5 W=3.5"

Design Crit: FBC2014Res/TPI-2007(STD)

PLT TYP. Wave

FT/RT=20%(0%)/10(0) 16-01.00.0413.17 QTY=1 RL/-/1/-/-/R/- Scale =.25"/Ft.

DOUGLAS FLEMING LICENSE No. 66646 STATE OF FLORIDA PROFESSIONAL ENGINEER

ALPINE AN ITW COMPANY

2400 Lake Orange Dr., Suite 150
Orlando, FL 32837
FL COA #0278

WARNING! READ AND FOLLOW ALL NOTES ON THIS DRAWING!
IMPORTANT FURNISH THIS DRAWING TO ALL CONTRACTORS INCLUDING THE INSTALLERS.

Trusses require extreme care in fabricating, handling, shipping, installing and bracing. Refer to and follow the latest edition of BCSI (Building Component Safety Information, by TPI and WTCA) for safety practices pertinent to performing these functions. Installers shall provide temporary bracing per BCSI. Unless noted otherwise, top chord shall have properly attached structural sheathing and bottom chord shall have a properly attached rigid ceiling. Locations shown for permanent lateral restraint of webs shall have bracing installed per BCSI sections B3, B7 or B10, as applicable. Apply plates to each face of truss and position as shown above and as the Joint Details, unless noted otherwise. Refer to drawings 160A-Z for standard plate positions.

Alpine, a division of ITW Building Components Group Inc. shall not be responsible for any deviation from this drawing, any failure to build the truss in conformance with ANSI/TPI 1, or for handling, shipping, installation & bracing of trusses.

A seal on this drawing or cover page listing this drawing, indicates acceptance of professional engineering responsibility solely for the design shown. The suitability and use of this drawing for any structure is the responsibility of the Building Designer per ANSI/TPI 1 Sec.2.

For more information see this job's general notes page and these web sites:
ALPINE: www.alpineitw.com; TPI: www.tpinst.org; WTCA: www.sbcindustry.com; ICC: www.iccsafe.org

TC LL	20.0 PSF	REF R215-- 83928
TC DL	10.0 PSF	DATE 01/19/17
BC DL	10.0 PSF	DRW HCUSR215 17019068
BC LL	0.0 PSF	HC-ENG KD/DF
TOT.LD.	40.0 PSF	SEQN- 455412
DUR.FAC.	1.25	FROM CDM
SPACING	24.0"	JREF- 1VXM215_Z04

CLR Reinforcing Member Substitution

This detail is to be used when a Continuous Lateral Restraint (CLR) is specified on a truss design but an alternative web reinforcement method is desired.

Notes:

This detail is only applicable for changing the specified CLR shown on single ply sealed designs to T-reinforcement or L-reinforecement or scab reinforcement.

Alternative reinforcement specified in chart below may be conservative. For minimum alternative reinforcement, re-run design with appropriate reinforcement type.

Web Member Size	Specified CLR Restraint	Alternative Reinforecement T- or L- Reinf.	Alternative Reinforecement Scab Reinf.
2x3 or 2x4	1 row	2x4	1-2x4
2x3 or 2x4	2 rows	2x6	2-2x4
2x6	1 row	2x4	1-2x6
2x6	2 rows	2x6	2-2x4(*)
2x8	1 row	2x6	1-2x8
2x8	2 rows	2x6	2-2x6(*)

T-reinforcement, L-reinforcement, or scab reinforcement to be same species and grade or better than web member unless specified otherwise on Engineer's sealed design.

(*) Center scab on wide face of web. Apply (1) scab to each face of web.

T-Reinforcement or L-Reinforcement:

Apply to either side of web narrow face. Attach with 10d (0.128"x3.0",min) nails at 6" o.c. Reinforcing member is a minimum 80% of web member length.

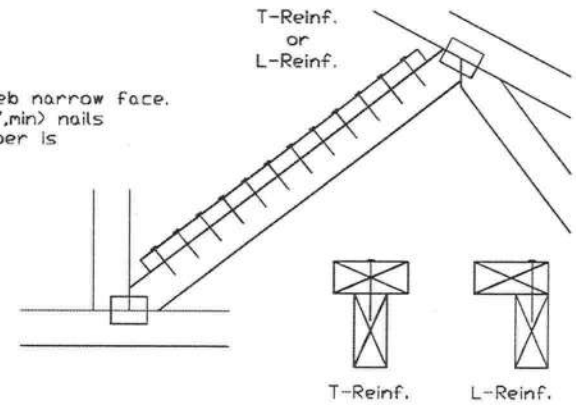

Scab Reinforcement:

Apply scab(s) to wide face of web. No more than (1) scab per face. Attach with 10d (0.128"x3.0",min) nails at 6" o.c. Reinforcing member is a minimum 80% of web member length.

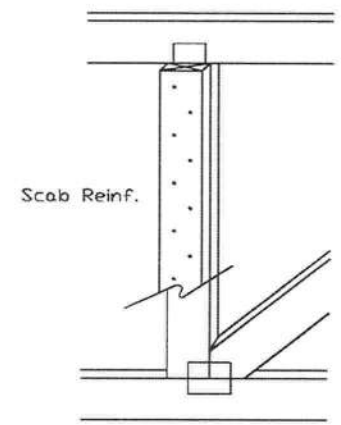

ALPINE™ AN ITW COMPANY
13723 Riverport Drive
Suite 200
Maryland Heights, MO 63043

DOUGLAS FLEMING LICENSE No. 66848 STATE OF FLORIDA PROFESSIONAL ENGINEER

TC LL	PSF	REF CLR Subst.
TC DL	PSF	DATE 10/01/14
BC DL	PSF	DRWG BRCLBSUB1014
BC LL	PSF	
TOT. L.D.	PSF	
DUR. FAC.		
SPACING		

Commentary: Deflection and Camber

Camber may be built into trusses to compensate for the vertical deflection that results from the application of loads. Providing camber has the following advantages:

- Helps to ensure level ceilings and floors after dead loads are applied.
- Facilitates drainage to avoid ponding on flat or low slope roofs.
- Compensates for different deflection characteristics between adjacent trusses.
- Improves appearance of garage door headers and other long spans that can appear to "sag."
- Avoids "dips" in roof ridgelines at the transition from the gable to adjacent clear span trusses.

In accordance with ANSI/TPI 1 the Building Designer, through the Construction Documents, shall provide the location, direction, and magnitude of all loads attributable to ponding that may occur due to the design of the roof drainage system. The Building Designer shall also specify any dead load, live load, and in-service creep deflection criteria for flat or low-slope roofs subject to ponding loads.

The amount of camber is dependent on the truss type, span, loading, application, etceteras.

More restrictive limits for allowable deflection and slenderness ratio (L/D) may be required to help control vibration.

The following tables are provided as guidelines for limiting deflection and estimating camber. Conditions or codes may exist that require exceeding these recommendations, or past experience may warrant using more stringent limitations.

L = Span of Truss (inches)
D = Depth of Truss at Deflection Point (inches)

Recommended Truss Deflection Limits

Truss Type	L/D	Deflection Limits: Live Load	Deflection Limits: Total Load
Pitched Roof Trusses	24	L/240 (vertical)	L/180 (vertical)
Floor of Room-In-Attic Trusses	24	L/360 (vertical)	L/240 (vertical)
Flat or Shallow Pitched Roof Trusses	24	L/360 (vertical)	L/240 (vertical)
Residential Floor Trusses	24	L/360 (vertical)	L/240 (vertical)
Commercial Floor Trusses	20	L/480 (vertical)	L/240 (vertical)
Scissors Trusses	24	0.75" (horizontal)	1.25" (horizontal)

Truss Type	Recommended Camber
Pitched Trusses	1.00 x Deflection from Actual Dead Load
Sloping Parallel Chord Trusses	1.5 x Vertical Deflection from Actual Dead Load
Floor Trusses	(0.25 x Deflection from Live Load) + Actual Dead Load
Flat Roof Trusses	(0.25 x Deflection from Live Load) + (1.5 x Design Dead Load Deflection)

Note: The actual [illegible] may be considerably less than the des[illegible]

DOUGLAS FLEMING LICENSE No. 68848 STATE OF FLORIDA PROFESSIONAL ENGINEER

ALPINE™ AN ITW COMPANY
13723 Riverport Drive
Suite 200
Maryland Heights, MO 63043

REF	DEFLEC/CAMB
DATE	10/01/14
DRWG	DEFLCAMB1014

Gable Stud Reinforcement Detail for Stucco Cladding

ASCE 7-10: 140 mph Wind Speed, 15' Mean Height, Enclosed, Exposure C, Kzt = 1.00

Or: 120 mph Wind Speed, 15' Mean Height, Partially Enclosed, Exposure C, Kzt = 1.00
Or: 120 mph Wind Speed, 15' Mean Height, Enclosed, Exposure D, Kzt = 1.00
Or: 100 mph Wind Speed, 15' Mean Height, Partially Enclosed, Exposure D, Kzt = 1.00

Max Gable Vertical Length	2x4 Gable Vertical Spacing	Species	Brace Grade	No Braces	(1) 1x4 'L' Brace * Group A	(1) 1x4 'L' Brace * Group B	(1) 2x4 'L' Brace * Group A	(1) 2x4 'L' Brace * Group B	(2) 2x4 'L' Brace ** Group A	(2) 2x4 'L' Brace ** Group B	(1) 2x6 'L' Brace * Group A	(1) 2x6 'L' Brace * Group B	(2) 2x6 'L' Brace ** Group A	(2) 2x6 'L' Brace ** Group B
	24" o.c.	SPF HF	#1 / #2	3' 9"	6' 4"	6' 7"	7' 6"	7' 10"	8' 11"	9' 4"	11' 9"	12' 3"	14' 0"	14' 0"
			#3	3' 7"	6' 3"	6' 6"	7' 5"	7' 8"	8' 10"	9' 2"	11' 7"	12' 1"	13' 10"	14' 0"
			Stud	3' 7"	6' 3"	6' 6"	7' 5"	7' 8"	8' 10"	9' 2"	11' 7"	12' 1"	13' 10"	14' 0"
			Standard	3' 7"	5' 8"	6' 0"	7' 5"	7' 8"	8' 10"	9' 2"	11' 7"	12' 1"	13' 10"	14' 0"
		SP DFL	#1	3' 11"	6' 5"	6' 8"	7' 7"	7' 11"	9' 0"	9' 5"	11' 11"	12' 4"	14' 0"	14' 0"
			#2	3' 9"	6' 4"	6' 7"	7' 6"	7' 10"	8' 11"	9' 4"	11' 9"	12' 3"	14' 0"	14' 0"
			#3	3' 8"	6' 0"	6' 4"	7' 5"	7' 9"	8' 11"	9' 3"	11' 8"	12' 2"	13' 11"	14' 0"
			Stud	3' 8"	6' 0"	6' 4"	7' 5"	7' 9"	8' 11"	9' 3"	11' 8"	12' 2"	13' 11"	14' 0"
			Standard	3' 7"	5' 3"	5' 7"	7' 0"	7' 6"	8' 10"	9' 2"	11' 0"	11' 10"	13' 10"	14' 0"
	16" o.c.	SPF HF	#1 / #2	4' 3"	7' 3"	7' 7"	8' 7"	8' 11"	10' 3"	10' 8"	13' 6"	14' 0"	14' 0"	14' 0"
			#3	4' 1"	7' 2"	7' 7"	8' 6"	8' 10"	10' 1"	10' 6"	13' 4"	13' 10"	14' 0"	14' 0"
			Stud	4' 1"	7' 2"	7' 5"	8' 6"	8' 10"	10' 1"	10' 6"	13' 4"	13' 10"	14' 0"	14' 0"
			Standard	4' 1"	6' 11"	7' 5"	8' 6"	8' 10"	10' 1"	10' 6"	13' 4"	13' 10"	14' 0"	14' 0"
		SP DFL	#1	4' 6"	7' 4"	7' 8"	8' 8"	9' 0"	10' 4"	10' 9"	13' 8"	14' 0"	14' 0"	14' 0"
			#2	4' 3"	7' 3"	7' 7"	8' 7"	8' 11"	10' 3"	10' 8"	13' 6"	14' 0"	14' 0"	14' 0"
			#3	4' 2"	7' 3"	7' 6"	8' 6"	8' 10"	10' 2"	10' 7"	13' 5"	13' 11"	14' 0"	14' 0"
			Stud	4' 2"	7' 3"	7' 6"	8' 6"	8' 10"	10' 2"	10' 7"	13' 5"	13' 11"	14' 0"	14' 0"
			Standard	4' 1"	6' 5"	6' 10"	8' 6"	8' 10"	10' 1"	10' 6"	13' 4"	13' 10"	14' 0"	14' 0"
	12" o.c.	SPF HF	#1 / #2	4' 8"	8' 0"	8' 4"	9' 5"	9' 10"	10' 3"	11' 9"	14' 0"	14' 0"	14' 0"	14' 0"
			#3	4' 6"	7' 11"	8' 2"	9' 4"	9' 8"	11' 1"	11' 7"	14' 0"	14' 0"	14' 0"	14' 0"
			Stud	4' 6"	7' 11"	8' 2"	9' 4"	9' 8"	11' 1"	11' 7"	14' 0"	14' 0"	14' 0"	14' 0"
			Standard	4' 6"	7' 11"	8' 2"	9' 4"	9' 8"	11' 1"	11' 7"	14' 0"	14' 0"	14' 0"	14' 0"
		SP DFL	#1	4' 11"	8' 1"	8' 5"	9' 7"	9' 11"	11' 4"	11' 10"	14' 0"	14' 0"	14' 0"	14' 0"
			#2	4' 8"	8' 0"	8' 4"	9' 5"	9' 10"	11' 3"	11' 9"	14' 0"	14' 0"	14' 0"	14' 0"
			#3	4' 7"	7' 11"	8' 3"	9' 5"	9' 9"	11' 2"	11' 8"	14' 0"	14' 0"	14' 0"	14' 0"
			Stud	4' 7"	7' 11"	8' 3"	9' 5"	9' 9"	11' 2"	11' 8"	14' 0"	14' 0"	14' 0"	14' 0"
			Standard	4' 6"	7' 5"	7' 11"	9' 4"	9' 8"	11' 1"	11' 7"	14' 0"	14' 0"	14' 0"	14' 0"

Bracing Group Species and Grades:

Group A:

Spruce-Pine-Fir: #1 / #2 Standard; #3 Stud

Hem-Fir: #2 Stud; #3 Standard

Douglas Fir-Larch: #3; Stud; Standard

Southern Pine***: #3; Stud; Standard

Group B:

Hem-Fir: #1 & Btr; #1

Douglas Fir-Larch: #1; #2

Southern Pine***: #1; #2

1x4 Braces shall be SRB (Stress-Rated Board).

***For 1x4 So. Pine use only Industrial 55 or Industrial 45 Stress-Rated Boards. Group B values may be used with these grades.

Gable Truss Detail Notes:

Wind Load deflection criterion is L/360.

Provide uplift connections for 55 plf over continuous bearing (5 psf TC Dead Load).

Gable end supports load from 4' 0" outlookers with 2' 0" overhang, or 12" plywood overhang.

Attach 'L' braces with 10d (0.128"x3.0" min) nails.

* For (1) 'L' brace: space nails at 2' o.c. in 18" end zones and 4" o.c. between zones.

** For (2) 'L' braces: space nails at 3" o.c. in 18" end zones and 6" o.c. between zones.

'L' bracing must be a minimum of 80% of web member length.

Gable Vertical Plate Sizes

Vertical Length	No Splice
Less than 4' 0"	1X4 or 2X3
Greater than 4' 0"	3X4

+ Refer to common truss design for peak, splice, and heel plates.

Refer to the Building Designer for conditions not addressed by this detail.

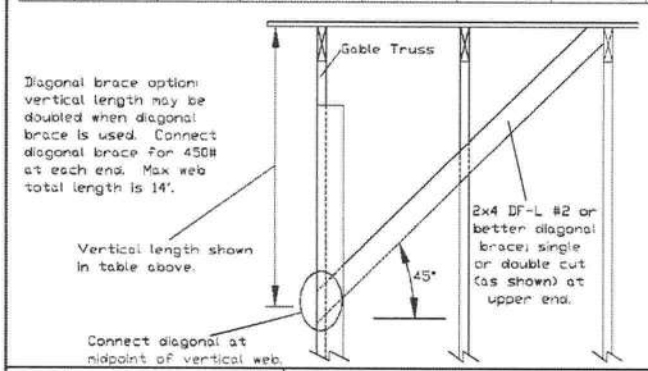

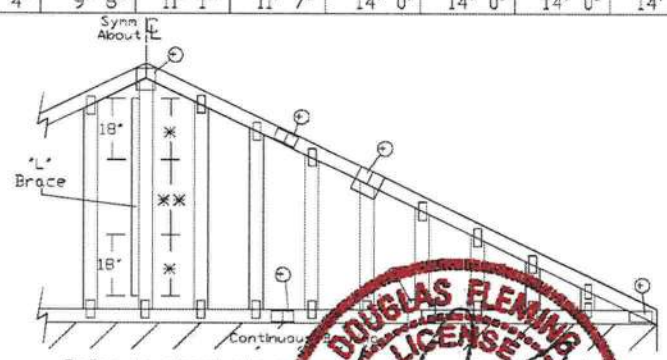

Refer to chart above for max gable vertical length.

WARNING READ AND FOLLOW ALL NOTES ON THIS DRAWING
IMPORTANT FURNISH THIS DRAWING TO ALL CONTRACTORS INCLUDING THE INSTALLERS.

Trusses require extreme care in fabricating, handling, shipping, installing and bracing. Refer to and follow the latest edition of BCSI (Building Component Safety Information, by TPI and SBCA) for safety practices prior to performing these functions. Installers shall provide temporary bracing per BCSI. Unless noted otherwise, top chord shall have properly attached structural sheathing and bottom chord shall have a properly attached rigid ceiling. Locations shown for permanent lateral restraint of webs shall have bracing installed per BCSI sections B3, B7 or B10, as applicable. Apply plates to each face of truss and position as shown above and on the Joint Details, unless noted otherwise. Refer to drawings 160A-Z for standard plate positions.

Alpine, a division of ITW Building Components Group Inc. shall not be responsible for any deviation from this drawing, any failure to build the truss in conformance with ANSI/TPI 1, or for handling, shipping, installation & bracing of trusses.

A seal on this drawing or cover page listing this drawing, indicates acceptance of professional engineering responsibility solely for the design shown. The suitability and use of this drawing for any structure is the responsibility of the Building Designer per ANSI/TPI 1 Sec.2.

For more information see this job's general notes page and these web sites:
ALPINE: www.alpineitw.com; TPI: www.tpinst.org; SBCA: www.sbcindustry.org; ICC: www.iccsafe.org

ALPINE™ AN ITW COMPANY
13723 Riverport Drive
Suite 200
Maryland Heights, MO 63043

DOUGLAS FLEMING LICENSE No. 66848 STATE OF FLORIDA PROFESSIONAL ENGINEER
Jan 20, 17

MAX. TOT. LD. 60 PSF

MAX. SPACING 24.0"

REF ASCE7-10-GAB14015
DATE 8/3/15
DRWG S14015ENC100815

Gable Detail
For Let-in Verticals

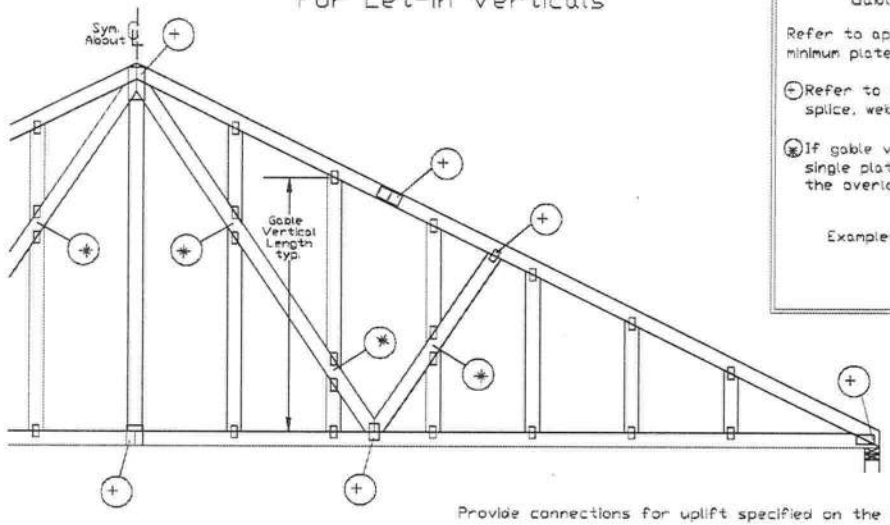

Gable Truss Plate Sizes

Refer to appropriate Alpine gable detail for minimum plate sizes for vertical studs.

(+) Refer to Engineered truss design for peak, splice, web, and heel plates.

(*) If gable vertical plates overlap, use a single plate that covers the total area of the overlapped plates to span the web.

Example:

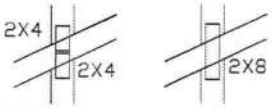

"T" Reinforcement Attachment Detail

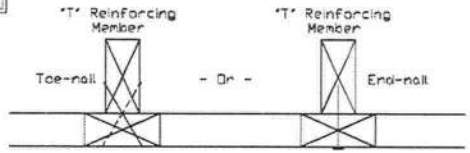

Provide connections for uplift specified on the engineered truss design.

Attach each "T" reinforcing member with

End Driven Nails:
10d Common (0.148"x 3",min) Nails at 4" o.c. plus
(4) nails in the top and bottom chords.

Toenailed Nails:
10d Common (0.148"x3",min) Toenails at 4" o.c. plus
(4) toenails in the top and bottom chords.

This detail to be used with the appropriate Alpine gable detail for ASCE wind load.

ASCE 7-05 Gable Detail Drawings
A13015051014, A12015051014, A11015051014, A10015051014, A14015051014,
A13030051014, A12030051014, A11030051014, A10030051014, A14030051014

ASCE 7-10 Gable Detail Drawings
A11515ENC101014, A12015ENC101014, A14015ENC101014, A16015ENC101014,
A18015ENC101014, A20015ENC101014, A20015END101014, A20015PED101014,
A11530ENC101014, A12030ENC101014, A14030ENC101014, A16030ENC101014,
A18030ENC101014, A20030ENC101014, A20030END101014, A20030PED101014
S11515ENC100815, S12015ENC100815, S14015ENC100815, S16015ENC100815,
S18015ENC100815, S20015ENC100815, S20015END100815, S20015[illegible]
S11530ENC100815, S12030ENC100815, S14030ENC100815, S[illegible]
S18030ENC100815, S20030ENC100815, S20030END100815, S[illegible]

See appropriate Alpine gable detail for maximum unre[illegible]

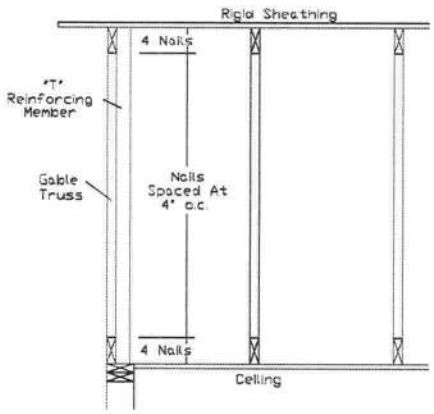

To convert from "L" to "T" reinforcing members, multiply "T" increase by length (based on appropriate Alpine gable detail).

Maximum allowable "T" reinforced gable vertical length is 14' from top to bottom chord.

"T" reinforcing member material must match size, specie, and grade of the "L" reinforcing member.

Web Length Increase w/ "T" Brace

"T" Reinf. Mbr. Size	"T" Increase
2x4	30 %
2x6	20 %

Example:
ASCE 7-10 Wind Speed = 120 mph
Mean Roof Height = 30 ft, Kzt = 1.00
Gable Vertical = 24"o.c. SP #3
"T" Reinforcing Member Size = 2x4
"T" Brace Increase (From Above) = 30% = 1.30
(1) 2x4 "L" Brace Length = 8' 7"
Maximum "T" Reinforced Gable Vertical Length
1.30 x 8' 7" = 11' 2"

ALPINE™
AN ITW COMPANY

13723 Riverport Drive
Suite 200
Maryland Heights, MO 63043

WARNING READ AND FOLLOW ALL NOTES ON THIS DRAWING
IMPORTANT FURNISH THIS DRAWING TO ALL CONTRACTORS INCLUDING THE INSTALLERS.

Trusses require extreme care in fabricating, handling, shipping, installing and bracing. Refer to and follow the latest edition of BCSI (Building Component Safety Information, by TPI and SBCA) for safety practices prior to performing these functions. Installers shall provide temporary bracing per BCSI. Unless noted otherwise, top chord shall have properly attached structural sheathing and bottom chord shall have a properly attached rigid ceiling. Locations shown for permanent lateral restraint of webs shall have bracing installed per BCSI sections B3, B7 or B10, as applicable. Apply plates to each face of truss and position as shown above and on the Joint Details, unless noted otherwise. Refer to drawings 160A-Z for standard plate positions.

Alpine, a division of ITW Building Components Group Inc. shall not be responsible for any deviation from this drawing, any failure to build the truss in conformance with ANSI/TPI 1, or for handling, shipping, installation & bracing of trusses.

A seal on this drawing or cover page listing this drawing, indicates acceptance of professional engineering responsibility solely for the design shown. The suitability and use of this drawing for any structure is the responsibility of the Building Designer per ANSI/TPI 1 Sec.2.

For more information see this job's general notes page and these web sites:
ALPINE: www.alpineitw.com; TPI: www.tpinst.org; SBCA: www.sbcindustry.org; ICC: www.iccsafe.org

DOUGLAS FLEMING LICENSE No. 66848 STATE OF FLORIDA PROFESSIONAL ENGINEER

Jan 20, 2017

REF	LET-IN VERT
DATE	10/01/14
DRWG	GBLLETIN1014
MAX. TOT. LD.	60 PSF
DUR. FAC.	ANY
MAX. SPACING	24.0"

01/20/2017

Gable Stud Reinforcement Detail

ASCE 7-10: 140 mph Wind Speed, 15' Mean Height, Enclosed, Exposure C, Kzt = 1.00

Or: 120 mph Wind Speed, 15' Mean Height, Partially Enclosed, Exposure C, Kzt = 1.00
Or: 120 mph Wind Speed, 15' Mean Height, Enclosed, Exposure D, Kzt = 1.00
Or: 100 mph Wind Speed, 15' Mean Height, Partially Enclosed, Exposure D, Kzt = 1.00

Max Gable Vertical Length

2x4 Gable Vertical Spacing	Species	Brace Grade	No Braces	(1) 1x4 "L" Brace * Group A	(1) 1x4 "L" Brace * Group B	(1) 2x4 "L" Brace * Group A	(1) 2x4 "L" Brace * Group B	(2) 2x4 "L" Brace ** Group A	(2) 2x4 "L" Brace ** Group B	(1) 2x6 "L" Brace * Group A	(1) 2x6 "L" Brace * Group B	(2) 2x6 "L" Brace ** Group A	(2) 2x6 "L" Brace ** Group B
24" o.c.	SPF HF	#1 / #2	4' 3"	7' 3"	7' 7"	8' 7"	8' 11"	10' 3"	10' 8"	13' 6"	14' 0"	14' 0"	14' 0"
		#3	4' 1"	6' 7"	7' 1"	8' 6"	8' 10"	10' 1"	10' 6"	13' 4"	13' 10"	14' 0"	14' 0"
		Stud	4' 1"	6' 7"	7' 0"	8' 6"	8' 10"	10' 1"	10' 6"	13' 4"	13' 10"	14' 0"	14' 0"
		Standard	4' 1"	5' 8"	6' 0"	7' 7"	8' 1"	10' 1"	10' 6"	11' 10"	12' 8"	14' 0"	14' 0"
	SP DFL	#1	4' 6"	7' 4"	7' 8"	8' 8"	9' 0"	10' 4"	10' 9"	13' 8"	14' 0"	14' 0"	14' 0"
		#2	4' 3"	7' 3"	7' 7"	8' 7"	8' 11"	10' 3"	10' 8"	13' 6"	14' 0"	14' 0"	14' 0"
		#3	4' 2"	6' 0"	6' 4"	7' 11"	8' 6"	10' 2"	10' 7"	12' 5"	13' 4"	14' 0"	14' 0"
		Stud	4' 2"	6' 0"	6' 4"	7' 11"	8' 6"	10' 2"	10' 7"	12' 5"	13' 4"	14' 0"	14' 0"
		Standard	4' 0"	5' 3"	5' 7"	7' 0"	7' 6"	9' 6"	10' 2"	11' 0"	11' 10"	14' 0"	14' 0"
16" o.c.	SPF HF	#1 / #2	4' 11"	8' 4"	8' 8"	9' 10"	10' 3"	11' 8"	12' 2"	14' 0"	14' 0"	14' 0"	14' 0"
		#3	4' 8"	8' 1"	8' 8"	9' 8"	10' 1"	11' 7"	12' 1"	14' 0"	14' 0"	14' 0"	14' 0"
		Stud	4' 8"	8' 1"	8' 6"	9' 8"	10' 1"	11' 7"	12' 1"	14' 0"	14' 0"	14' 0"	14' 0"
		Standard	4' 8"	6' 11"	7' 5"	9' 3"	9' 11"	11' 7"	12' 1"	14' 0"	14' 0"	14' 0"	14' 0"
	SP DFL	#1	5' 1"	8' 5"	8' 9"	9' 11"	10' 4"	11' 10"	12' 4"	14' 0"	14' 0"	14' 0"	14' 0"
		#2	4' 11"	8' 4"	8' 8"	9' 10"	10' 3"	11' 8"	12' 2"	14' 0"	14' 0"	14' 0"	14' 0"
		#3	4' 9"	7' 4"	7' 9"	9' 9"	10' 2"	11' 8"	12' 1"	14' 0"	14' 0"	14' 0"	14' 0"
		Stud	4' 9"	7' 4"	7' 9"	9' 9"	10' 2"	11' 8"	12' 1"	14' 0"	14' 0"	14' 0"	14' 0"
		Standard	4' 8"	6' 5"	6' 10"	8' 7"	9' 2"	11' 7"	12' 1"	13' 6"	14' 0"	14' 0"	14' 0"
12" o.c.	SPF HF	#1 / #2	5' 5"	9' 2"	9' 6"	10' 10"	11' 3"	11' 8"	13' 5"	14' 0"	14' 0"	14' 0"	14' 0"
		#3	5' 1"	9' 0"	9' 4"	10' 8"	11' 1"	12' 9"	13' 3"	14' 0"	14' 0"	14' 0"	14' 0"
		Stud	5' 1"	9' 0"	9' 4"	10' 8"	11' 1"	12' 9"	13' 3"	14' 0"	14' 0"	14' 0"	14' 0"
		Standard	5' 1"	8' 0"	8' 6"	10' 8"	11' 1"	12' 9"	13' 3"	14' 0"	14' 0"	14' 0"	14' 0"
	SP DFL	#1	5' 8"	9' 3"	9' 8"	10' 11"	11' 4"	13' 0"	13' 6"	14' 0"	14' 0"	14' 0"	14' 0"
		#2	5' 5"	9' 2"	9' 6"	10' 10"	11' 3"	12' 11"	13' 5"	14' 0"	14' 0"	14' 0"	14' 0"
		#3	5' 3"	8' 5"	9' 0"	10' 9"	11' 2"	12' 10"	13' 4"	14' 0"	14' 0"	14' 0"	14' 0"
		Stud	5' 3"	8' 5"	9' 0"	10' 9"	11' 2"	12' 10"	13' 4"	14' 0"	14' 0"	14' 0"	14' 0"
		Standard	5' 1"	7' 5"	7' 11"	9' 11"	10' 7"	12' 9"	13' 3"	14' 0"	14' 0"	14' 0"	14' 0"

Bracing Group Species and Grades:

Group A:

Spruce-Pine-Fir

#1 / #2	Standard
#3	Stud

Hem-Fir

#2	Stud
#3	Standard

Douglas Fir-Larch

#3
Stud
Standard

Southern Pine***

#3
Stud
Standard

Group B:

Hem-Fir

#1 & Btr
#1

Douglas Fir-Larch

#1
#2

Southern Pine***

#1
#2

1x4 Braces shall be SRB (Stress-Rated Board).

***For 1x4 So. Pine use only Industrial 55 or Industrial 45 Stress-Rated Boards. Group B values may be used with these grades.

Gable Truss Detail Notes:

Wind Load deflection criterion is L/240.

Provide uplift connections for 55 plf over continuous bearing (5 psf TC Dead Load).

Gable end supports load from 4' 0" outlookers with 2' 0" overhang, or 12" plywood overhang.

Attach "L" braces with 10d (0.128"x3.0" min) nails.

* For (1) "L" braces: space nails at 2" o.c. in 18" end zones and 4" o.c. between zones.

** For (2) "L" braces: space nails at 3" o.c. in 18" end zones and 6" o.c. between zones.

"L" bracing must be a minimum of 80% of web member length.

Gable Vertical Plate Sizes

Vertical Length	No Splice
Less than 4' 0"	1X4 or 2X3
Greater than 4' 0"	3X4

+ Refer to common truss design for peak, splice, and heel plates.

Refer to the Building Designer for conditions not addressed by this detail.

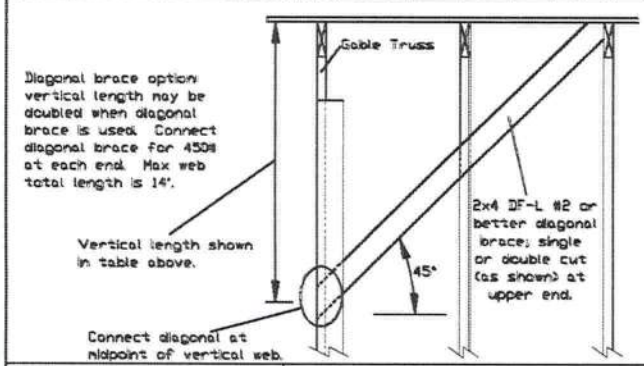

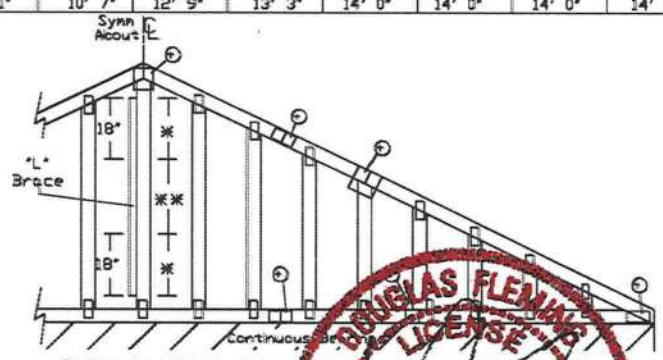

Refer to chart above for max gable vertical length.

WARNING READ AND FOLLOW ALL NOTES ON THIS DRAWING
IMPORTANT FURNISH THIS DRAWING TO ALL CONTRACTORS INCLUDING THE INSTALLERS.

Trusses require extreme care in fabricating, handling, shipping, installing and bracing. Refer to and follow the latest edition of BCSI (Building Component Safety Information, by TPI and SBCA) for safety practices prior to performing these functions. Installers shall provide temporary bracing per BCSI. Unless noted otherwise, top chord shall have properly attached structural sheathing and bottom chord shall have a properly attached rigid ceiling. Locations shown for permanent lateral restraint of webs shall have bracing installed per BCSI sections B3, B7 or B10, as applicable. Apply plates to each face of truss and position as shown above and on the Joint Details, unless noted otherwise. Refer to drawings 160A-Z for standard plate positions.

Alpine, a division of ITW Building Components Group Inc. shall not be responsible for any deviation from this drawing, any failure to build the truss in conformance with ANSI/TPI 1, or for handling, shipping, installation & bracing of trusses.

A seal on this drawing or cover page listing this drawing, indicates acceptance of professional engineering responsibility solely for the design shown. The suitability and use of this drawing for any structure is the responsibility of the Building Designer per ANSI/TPI 1 Sec.2.

For more information see this job's general notes page and these web sites:
ALPINE: www.alpineitw.com; TPI: www.tpinst.org; SBCA: www.sbcindustry.org; ICC: www.iccsafe.org

ALPINE™ AN ITW COMPANY
13723 Riverport Drive
Suite 200
Maryland Heights, MO 63043

DOUGLAS FLEMING LICENSE No. 66848 STATE OF FLORIDA PROFESSIONAL ENGINEER
Jan 20, 2017

MAX. TOT. LD. 60 PSF

MAX. SPACING 24.0"

REF	ASCE7-10-GAB14015
DATE	10/01/14
DRWG	A14015ENC101014

Piggyback Detail - ASCE 7-10: 160 mph, 30' Mean Height, Enclosed, Exposure C, Kzt=1.00

160 mph Wind, 30.00 ft Mean Hgt, ASCE 7-10, Enclosed Bldg. located anywhere in roof, Exp C, Wind DL= 5.0 psf (min), Kzt=1.0.
Or 140 mph wind, 30.00 ft Mean Hgt, ASCE 7-10, Enclosed Bldg. located anywhere in roof, Exp D, wind DL= 5.0 psf (min), Kzt=1.0.

Note: Top chords of trusses supporting piggyback cap trusses must be adequately braced by sheathing or purlins. The building Engineer of Record shall provide diagonal bracing or any other suitable anchorage to permanently restrain purlins, and lateral bracing for out of plane loads over gable ends.

Maximum truss spacing is 24" o.c. detail is not applicable if cap supports additional loads such as cupola, steeple, chinney or drag strut loads.

** Refer to Engineer's sealed truss design drawing for piggyback and base truss specifications.

Detail A : Purlin Spacing = 24" o.c. or less

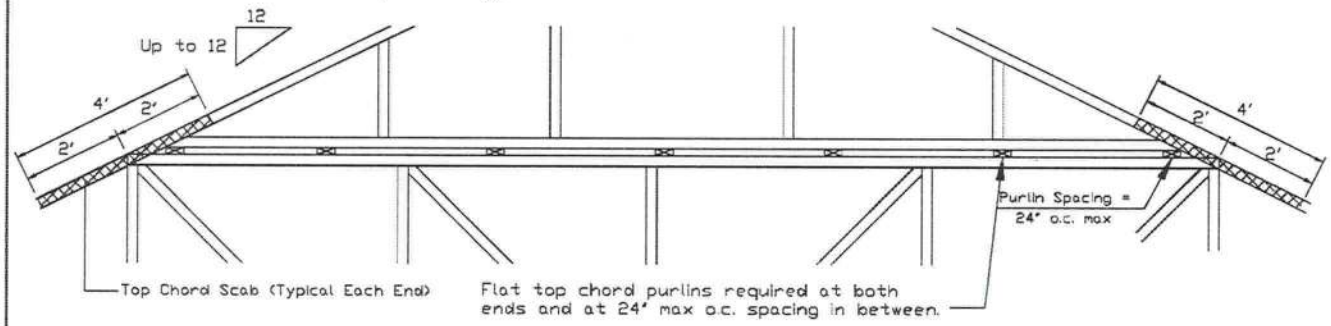

Piggyback cap truss slant nailed to all top chord purlin bracing with (2) 16d box nails (0.135"x3.5") and secure top chord with 2x4 #3 grade scab (1 side only at each end) attached with 2 rows of 10d box nails (0.128"x3") at 4" o.c.

Attach purlin bracing to the flat top chord using (2) 16d box nails (0.135"x3.5").

The top chord #3 grade 2x4 scab may be replaced with either of the following: (1) 3X8 Trulox plate attached with (8) 0.120"x1.375" nails, (4) into cap TC & (4) into base truss TC or (1) 28PB wave piggyback plate plated to the piggyback truss TC and attached to the base truss TC with (4) 0.120"x1.375" nails. Note: Nailing thru holes of wave plate is acceptable.

Detail B : Purlin Spacing > 24" o.c.

Piggyback cap truss slant nailed to all top chord purlin bracing with (2) 16d box nails (0.135"x3.5") and secure top chord with 2x4 #3 grade scab (1 side only at each end) attached with 2 rows of 10d box nails (0.128"x3") at 4" o.c.

Attach purlin bracing to the flat top chord using a minimum of (2) 16d box nails (0.135"x3.5").

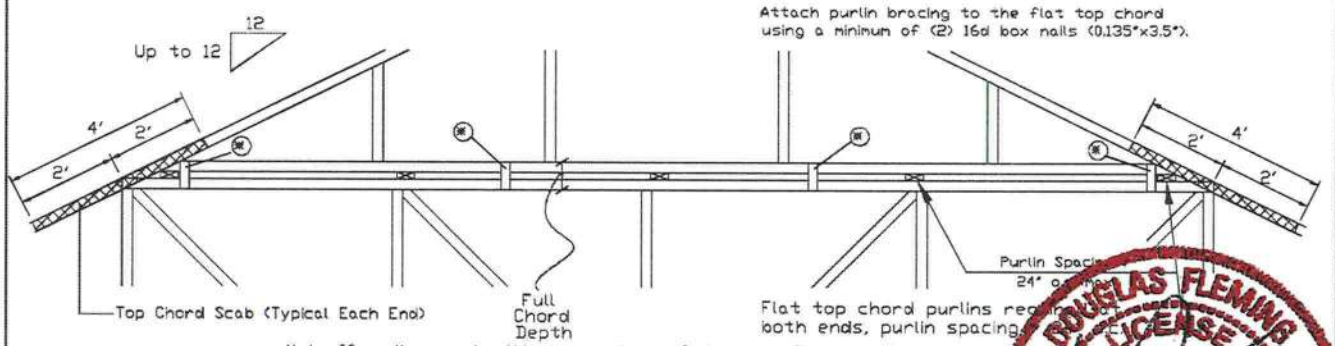

Note: If purlins or sheathing are not specified on the flat top of the base truss, purlins must be installed at 24" o.c. max. and use Detail A.

* In addition, provide connection with one of the following methods:

Trulox
Use 3X8 Trulox plates for 2x4 chord member, and 3X10 Trulox plates for 2x6 and larger chord members. Attach to each face @ 8" o.c. with (4) 0.120"x1.375" nails into cap bottom chord and (4) in base truss top chord. Trulox plates may be staggered 4" o.c. front to back faces.

APA Rated Gusset
8"x8"x7/16" (min) APA rated sheathing gussets (each face). Attach @ 8" o.c. with (8) 6d common (0.113"x2") nails per gusset, (4) in cap bottom chord and (4) in base truss top chord. Gussets may be staggered 4" o.c. front to back faces.

2x4 Vertical Scabs
2x4 SPF #2, full chord depth scabs (each face). Attach @ 8" o.c. with (6) 10d box nails (0.128"x3") per scab, (3) in cap bottom chord and (3) in base truss top chord. Scabs may be staggered 4" o.c. front to back faces.

28PB Wave Piggyback Plate
One 28PB wave piggyback plate to each face @ 8" o.c. Attach teeth to piggyback at time of fabrication. Attach to supporting truss with (4) 0.120"x1.375" nails per face per ply. Piggyback plates may be staggered 4" o.c. front to back faces.

ALPINE™
AN ITW COMPANY
13723 Riverport Drive
Suite 200
Maryland Heights, MO 63043

DOUGLAS FLEMING LICENSE No. 66848 STATE OF FLORIDA PROFESSIONAL ENGINEER

Jan 20, 2017

REF	PIGGYBACK
DATE	10/01/14
DRWG	PB160101014
SPACING	24.0"

PRELIMINARY LAYOUT

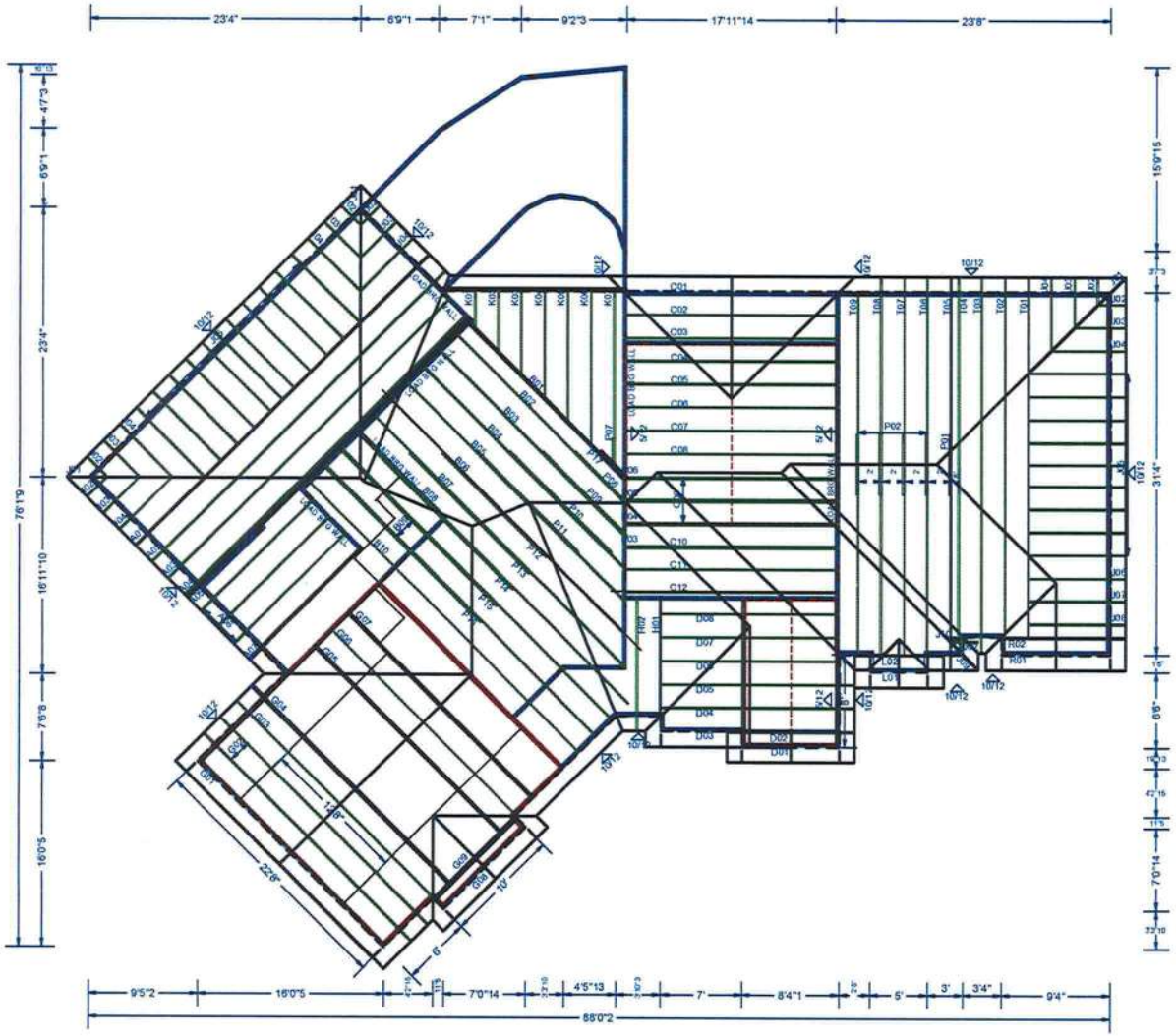

W.B. Howland Truss Co.
P.O. Box 700
Live Oak, FL 32064
(386)362-1235
(386)362-7124 (fax)

ROOF PITCH: 10/12
CLG PITCH: 5/12
OVERHANG: 1'4"
LOADING: 40
WIND LOAD: 130
EXPOSURE: C
FBC 2010 RESIDENTIAL
EXT. WALLS: 2x4 FRAMING
DATE: 10/14/16

- PLEASE CONFIRM ALL CEILING HEIGHTS PRIOR TO BUILD.

- LOFT/BATH FLOOR TO BE DESIGNED AND FRAMED BY OTHERS. PLEASE ADVISE IF FLOOR TRUSSES ARE DESIRED.

- OPEN AREAS TO BE CONVENTIONALLY FRAMED BY OTHERS.

- FINAL TRUSS DESIGN TO BE REVIEWED AND CONFIRMED BY CONTRACTOR. THIS DESIGN FOR PRICING PURPOSES ONLY.

JOB #: 16-0982

Job Name: HUBBART RESIDENCE
Customer: SPARKS CONST.
Designer: Chris McCall
ADDRESS:
SALESMAN: DB
: <Not Found>

JOB NO:
16-0982

PAGE NO:
1 OF 1

#34931

Alpine, an ITW Company
2400 Lake Orange Dr., Suite 150
Orlando, FL 32837
Phone: (800)755-6001
alpineitw.com

Site Information:

Customer: W. B. Howland Company, Inc.	Job Number: 16-0982F
JobDescription: HUBBART RESIDENCE	
Address:	City, State, Zip:

Name, Address and License # of Structural EOR if one exists for the building:

Name:	License #:	State:
Address:	City, State, Zip:	

Job Engineering Criteria:

Design Code: FBC 2014 RES		View Version: 16.02.01.0131.17	JRef #: 1VZZ2150002
Wind Standard: NA	Wind Speed (mph): N/A	Roof Load (psf): None	Floor Load (psf): 40.00-10.00- 0.00-5.00

This package contains a job notes page, 3 truss drawings and 2 details.

Item	Seal #	Truss
1	104.17.1317.40283	F01
3	104.17.1317.44093	F03

Item	Seal #	Truss
2	104.17.1317.41433	F02

DOUGLAS FLEMING
LICENSE
No. 66648
STATE OF
FLORIDA
PROFESSIONAL ENGINEER

This document has been electronically signed and sealed using a Digital Signature. Printed copies without an original signature must be verified using the original electronic version.

04/14/2017

Job Number: 16-0982F HUBBART RESIDENCE **Truss Label:** F01	Ply: 1 Qty: 1	SEQN: 467848 / T1 SY42 FROM: CDM	Cust: R215 JRef: 1VZZ2150002 DrwNo: 104.17.1317.40283 KM / DF 04/14/2017

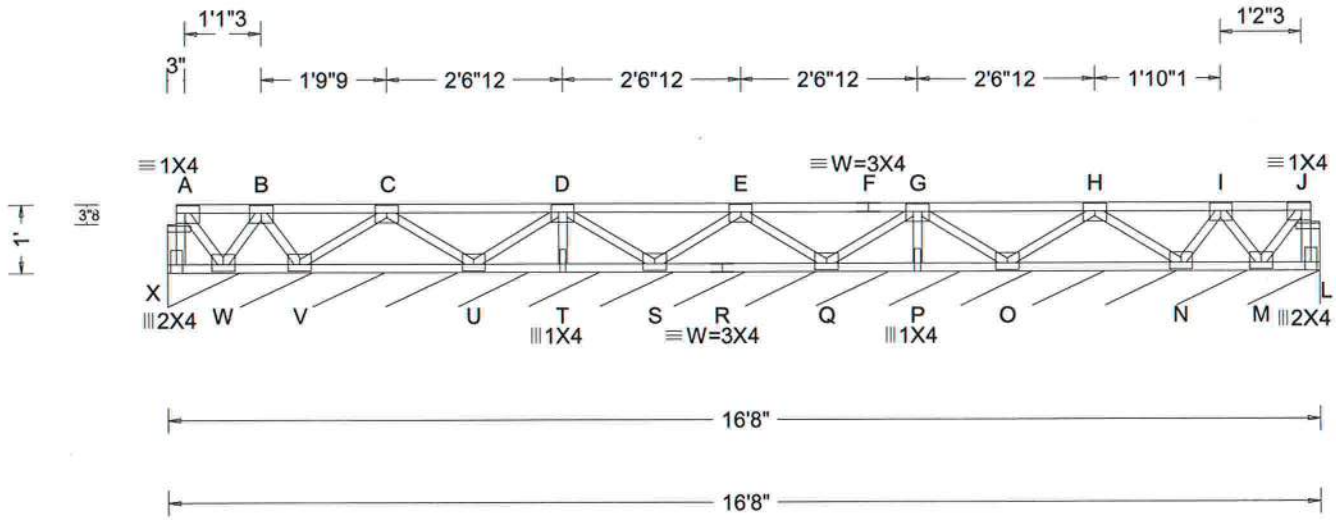

Loading Criteria (psf)	**Wind Criteria**	**Snow Criteria** (Pg,Pf in PSF)	**Defl/CSI Criteria**	**▲ Maximum Reactions (lbs), or *=PLF**
TCLL: 40.00 TCDL: 10.00 BCLL: 0.00 BCDL: 5.00 Des Ld: 55.00 NCBCLL: 10.00 Soffit: 2.00 Load Duration: 1.00 Spacing: 24.0 "	Wind Std: NA Speed: NA mph Enclosure: NA Category: NA EXP: NA Mean Height: NA ft TCDL: NA psf BCDL: NA psf MWFRS Parallel Dist: NA C&C Dist a: NA ft Loc. from endwall: NA I: NA GCpi: NA Wind Duration: NA	Pg: NA Ct: NA CAT: NA Pf: NA Ce: NA Lu: NA Cs: NA Snow Duration: NA **Code / Misc Criteria** Bldg Code: FBC 2014 RES TPI Std: 2007 Rep Factors Used: Yes FT/RT:12(0)/10(0) Plate Type(s): WAVE	PP Deflection in loc L/defl L/# VERT(LL): 0.002 E 999 480 VERT(TL): 0.003 E 999 360 HORZ(LL): 0.000 M - - HORZ(TL): 0.001 M - - Creep Factor: 1.5 Max TC CSI: 0.157 Max BC CSI: 0.029 Max Web CSI: 0.021 VIEW Ver: 16.02.01B.0131.17	Loc R / U / Rw / Rh / RL / W X* 109 / - / - / - / - / 200 X Min Brg Width Req = - Bearing X is a rigid surface. Members not listed have forces less than 375#

Lumber

Top chord 4x2 SP M-31
Bot chord 4x2 SP M-31
Webs 4x2 SP M-31

Plating Notes

All plates are 3X4 except as noted.

Additional Notes

See detail STRBRIBR1014 for bracing and bridging recommendations.

Truss must be installed as shown with top chord up.

#0 278

04/14/2017

****WARNING**** READ AND FOLLOW ALL NOTES ON THIS DRAWING!
****IMPORTANT**** FURNISH THIS DRAWING TO ALL CONTRACTORS INCLUDING THE INSTALLERS

Trusses require extreme care in fabricating, handling, shipping, installing and bracing. Refer to and follow the latest edition of BCSI (Building Component Safety Information, by TPI and SBCA) for safety practices prior to performing these functions. Installers shall provide temporary bracing per BCSI. Unless noted otherwise,top chord shall have properly attached structural sheathing and bottom chord shall have a properly attached rigid ceiling. Locations shown for permanent lateral restraint of webs shall have bracing installed per BCSI sections B3, B7, or B10, as applicable. Apply plates to each face of truss and position as shown above and on the Joint Details, unless noted otherwise. Refer to drawings 160A-Z for standard plate positions.

Alpine, a division of ITW Building Components Group Inc. shall not be responsible for any deviation from this drawing,any failure to build the truss in conformance with ANSI/TPI 1, or for handling, shipping, installation and bracing of trusses**A seal on this drawing or cover page listing this drawing, indicates acceptance of professional engineering responsibility solely for the design shown. The suitability and use of this drawing for any structure is the responsibility of the Building Designer per ANSI/TPI 1 Sec.2.**

For more information see this job's general notes page and these web sites: ALPINE: www.alpineitw.com; TPI: www.tpinst.org; SBCA: www.sbcindustry.com; ICC: www.iccsafe.org

ALPINE AN ITW COMPANY
2400 Lake Orange Dr.
Suite 150
Orlando FL, 32837

Job Number: 16-0982F HUBBART RESIDENCE **Truss Label:** F02	Ply: 1 Qty: 3	SEQN: 467845 / T2 SY42 FROM: CDM	Cust: R215 JRef: 1VZZ2150002 DrwNo: 104.17.1317.41433 KM / DF 04/14/2017

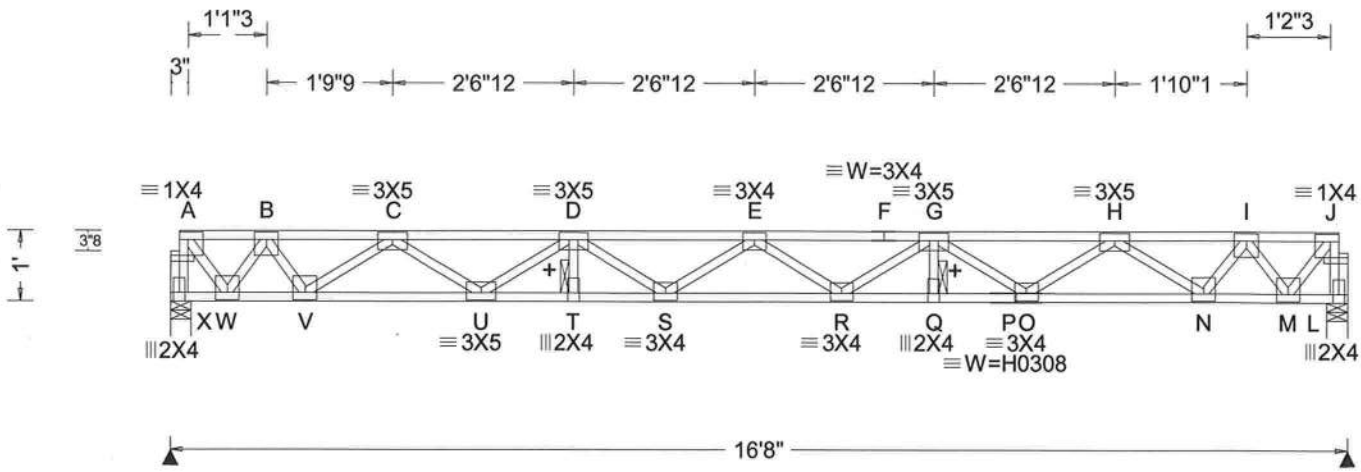

Loading Criteria (psf)

TCLL:	40.00
TCDL:	10.00
BCLL:	0.00
BCDL:	5.00
Des Ld:	55.00
NCBCLL:	10.00
Soffit:	2.00

Load Duration: 1.00
Spacing: 24.0 "

Wind Criteria
Wind Std: NA
Speed: NA mph
Enclosure: NA
Category: NA
EXP: NA
Mean Height: NA ft
TCDL: NA psf
BCDL: NA psf
MWFRS Parallel Dist: NA
C&C Dist a: NA ft
Loc. from endwall: NA
I: NA GCpi: NA
Wind Duration: NA

Snow Criteria (Pg,Pf in PSF)
Pg: NA Ct: NA CAT: NA
Pf: NA Ce: NA
Lu: NA Cs: NA
Snow Duration: NA

Code / Misc Criteria
Bldg Code: FBC 2014 RES
TPI Std: 2007
Rep Factors Used: Yes
FT/RT:12(0)/10(0)
Plate Type(s):
WAVE, HS

Defl/CSI Criteria

PP Deflection in	loc	L/defl	L/#
VERT(LL): 0.268	E	724	480
VERT(TL): 0.419	E	462	360
HORZ(LL): 0.039	M	-	-
HORZ(TL): 0.061	M	-	-

Creep Factor: 1.5
Max TC CSI: 0.259
Max BC CSI: 0.491
Max Web CSI: 0.118

VIEW Ver: 16.02.01B.0131.17

▲ Maximum Reactions (lbs)

Loc	R	/ U	/ Rw	/ Rh	/ RL	/ W
X	904	/ -	/ -	/ -	/ -	/ 3.5
L	904	/ -	/ -	/ -	/ -	/ 3.5

X Min Brg Width Req = 1.5
L Min Brg Width Req = 1.5
Bearings X & L are a rigid surface.

Members not listed have forces less than 375#

Maximum Top Chord Forces Per Ply (lbs)

Chords	Tens.	Comp.	Chords	Tens.	Comp.
A - B	0	-512	F - G	0	-3961
B - C	0	-1489	G - H	0	-3136
C - D	0	-3075	H - I	0	-1587
D - E	0	-3941	I - J	0	-551
E - F	0	-3961			

Maximum Bot Chord Forces Per Ply (lbs)

Chords	Tens.	Comp.	Chords	Tens.	Comp.
W - V	1047	0	R - Q	3744	0
V - U	2443	0	Q - P	3744	0
U - T	3705	0	P - O	3744	0
T - S	3705	0	O - N	2523	0
S - R	4131	0	N - M	1121	0

Maximum Web Forces Per Ply (lbs)

Webs	Tens.	Comp.	Webs	Tens.	Comp.
A - X	0	-831	G - O	0	-732
A - W	967	0	O - H	747	0
W - B	0	-1006	H - N	0	-1143
B - V	832	0	N - I	833	0
V - C	0	-1165	I - M	0	-1020
C - U	771	0	M - J	988	0
U - D	0	-757	J - L	0	-835

Lumber
Top chord 4x2 SP M-31
Bot chord 4x2 SP M-31
Webs 4x2 SP M-31

Plating Notes
All plates are 4X4 except as noted.

Additional Notes
+ 2x6 continuous strongback. See detail STRBRIBR1014 for bracing and bridging recommendations.

Truss must be installed as shown with top chord up.

DOUGLAS FLEMING
LICENSE
No. 66648
STATE OF
FLORIDA
PROFESSIONAL ENGINEER

#0 278

04/14/2017

****WARNING**** READ AND FOLLOW ALL NOTES ON THIS DRAWING!
****IMPORTANT**** FURNISH THIS DRAWING TO ALL CONTRACTORS INCLUDING THE INSTALLERS

Trusses require extreme care in fabricating, handling, shipping, installing and bracing. Refer to and follow the latest edition of BCSI (Building Component Safety Information, by TPI and SBCA) for safety practices prior to performing these functions. Installers shall provide temporary bracing per BCSI. Unless noted otherwise,top chord shall have properly attached structural sheathing and bottom chord shall have a properly attached rigid ceiling. Locations shown for permanent lateral restraint of webs shall have bracing installed per BCSI sections B3, B7, or B10, as applicable. Apply plates to each face of truss and position as shown above and on the Joint Details, unless noted otherwise. Refer to drawings 160A-Z for standard plate positions.

Alpine, a division of ITW Building Components Group Inc. shall not be responsible for any deviation from this drawing,any failure to build the truss in conformance with ANSI/TPI 1, or for handling, shipping, installation and bracing of trusses**A seal on this drawing or cover page listing this drawing, indicates acceptance of professional engineering responsibility solely for the design shown. The suitability and use of this drawing for any structure is the responsibility of the Building Designer per ANSI/TPI 1 Sec.2.**

For more information see this job's general notes page and these web sites: ALPINE: www.alpineitw.com; TPI: www.tpinst.org; SBCA: www.sbcindustry.com; ICC: www.iccsafe.org

ALPINE
AN ITW COMPANY
2400 Lake Orange Dr.
Suite 150
Orlando FL, 32837

Job Number: 16-0982F HUBBART RESIDENCE **Truss Label:** F03	Ply: 1 Qty: 1	SEQN: 467843 / T3 SY42 FROM: CDM	Cust: R215 JRef: 1VZZ2150002 DrwNo: 104.17.1317.44093 KM / DF 04/14/2017

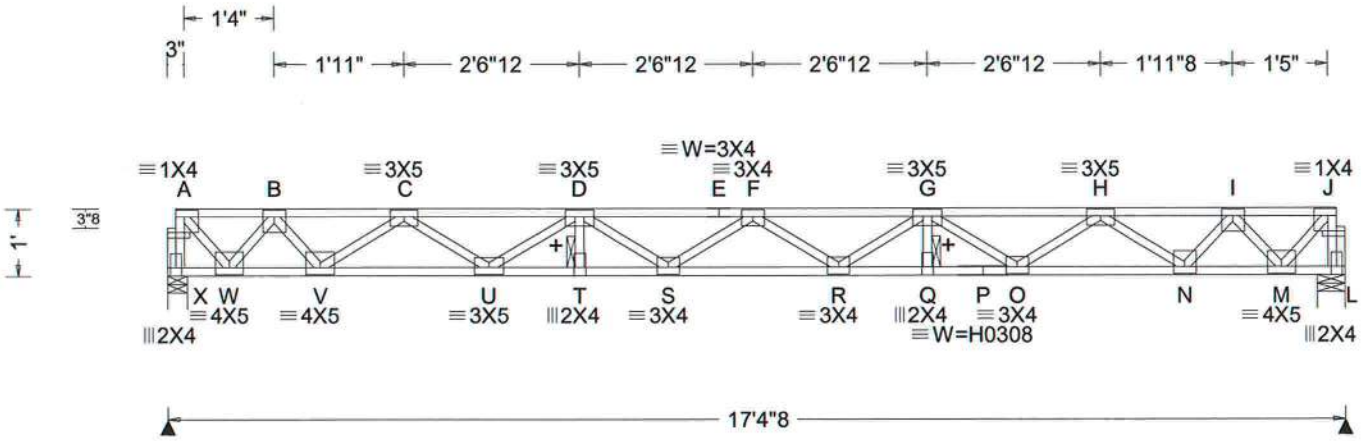

Loading Criteria (psf)

TCLL:	40.00
TCDL:	10.00
BCLL:	0.00
BCDL:	5.00
Des Ld:	55.00
NCBCLL:	10.00
Soffit:	2.00

Load Duration: 1.00
Spacing: 24.0 "

Wind Criteria
Wind Std: NA
Speed: NA mph
Enclosure: NA
Category: NA
EXP: NA
Mean Height: NA ft
TCDL: NA psf
BCDL: NA psf
MWFRS Parallel Dist: NA
C&C Dist a: NA ft
Loc. from endwall: NA
I: NA GCpi: NA
Wind Duration: NA

Snow Criteria (Pg,Pf in PSF)
Pg: NA Ct: NA CAT: NA
Pf: NA Ce: NA
Lu: NA Cs: NA
Snow Duration: NA

Code / Misc Criteria
Bldg Code: FBC 2014 RES
TPI Std: 2007
Rep Factors Used: Yes
FT/RT:12(0)/10(0)
Plate Type(s):
WAVE, HS

Defl/CSI Criteria

PP Deflection in	loc	L/defl	L/#
VERT(LL): 0.313	F	647	480
VERT(TL): 0.489	F	413	360
HORZ(LL): 0.044	M	-	-
HORZ(TL): 0.069	M	-	-

Creep Factor: 1.5
Max TC CSI: 0.300
Max BC CSI: 0.534
Max Web CSI: 0.131

VIEW Ver: 16.02.01B.0131.17

▲ Maximum Reactions (lbs)

Loc	R	/ U	/ Rw	/ Rh	/ RL	/ W
X	943	/ -	/ -	/ -	/ -	/ 3.5
L	943	/ -	/ -	/ -	/ -	/ 4.9

X Min Brg Width Req = 1.5
L Min Brg Width Req = 1.5
Bearings X & L are a rigid surface.

Members not listed have forces less than 375#

Maximum Top Chord Forces Per Ply (lbs)

Chords	Tens.	Comp.	Chords	Tens.	Comp.
A - B	0	-650	F - G	0	-4326
B - C	0	-1852	G - H	0	-3502
C - D	0	-3442	H - I	0	-1950
D - E	0	-4307	I - J	0	-690
E - F	0	-4307			

Maximum Bot Chord Forces Per Ply (lbs)

Chords	Tens.	Comp.	Chords	Tens.	Comp.
W - V	1315	0	R - Q	4110	0
V - U	2810	0	Q - P	4110	0
U - T	4070	0	P - O	4110	0
T - S	4070	0	O - N	2891	0
S - R	4497	0	N - M	1391	0

Maximum Web Forces Per Ply (lbs)

Webs	Tens.	Comp.	Webs	Tens.	Comp.
A - X	0	-876	G - O	0	-730
A - W	1075	0	O - H	747	0
W - B	0	-1097	H - N	0	-1149
B - V	885	0	N - I	887	0
V - C	0	-1170	I - M	0	-1115
C - U	771	0	M - J	1098	0
U - D	0	-755	J - L	0	-878

Lumber
Top chord 4x2 SP M-31
Bot chord 4x2 SP M-31
Webs 4x2 SP M-31

Plating Notes
All plates are 4X4 except as noted.

Deflection
Max JT VERT DEFL: LL: 0.30" DL: 0.17". See detail DEFLCAMB1014 for camber recommendations.

Additional Notes
+ 2x6 continuous strongback. See detail STRBRIBR1014 for bracing and bridging recommendations.

Truss must be installed as shown with top chord up.

DOUGLAS FLEMING
LICENSE
No. 66648
STATE OF
FLORIDA
PROFESSIONAL ENGINEER

#0 278

04/14/2017

****WARNING**** READ AND FOLLOW ALL NOTES ON THIS DRAWING!
****IMPORTANT**** FURNISH THIS DRAWING TO ALL CONTRACTORS INCLUDING THE INSTALLERS

Trusses require extreme care in fabricating, handling, shipping, installing and bracing. Refer to and follow the latest edition of BCSI (Building Component Safety Information, by TPI and SBCA) for safety practices prior to performing these functions. Installers shall provide temporary bracing per BCSI. Unless noted otherwise,top chord shall have properly attached structural sheathing and bottom chord shall have a properly attached rigid ceiling. Locations shown for permanent lateral restraint of webs shall have bracing installed per BCSI sections B3, B7, or B10, as applicable. Apply plates to each face of truss and position as shown above and on the Joint Details, unless noted otherwise. Refer to drawings 160A-Z for standard plate positions.

Alpine, a division of ITW Building Components Group Inc. shall not be responsible for any deviation from this drawing,any failure to build the truss in conformance with ANSI/TPI 1, or for handling, shipping, installation and bracing of trusses**A seal on this drawing or cover page listing this drawing, indicates acceptance of professional engineering responsibility solely for the design shown. The suitability and use of this drawing for any structure is the responsibility of the Building Designer per ANSI/TPI 1 Sec.2.**

For more information see this job's general notes page and these web sites: ALPINE: www.alpineitw.com; TPI: www.tpinst.org; SBCA: www.sbcindustry.com; ICC: www.iccsafe.org

ALPINE
AN ITW COMPANY
2400 Lake Orange Dr.
Suite 150
Orlando FL, 32837

STRONGBACK BRIDGING RECOMMENDATIONS

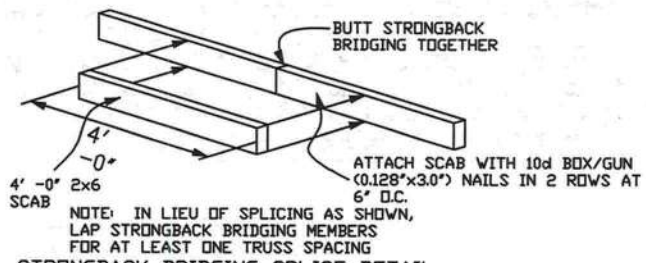

STRONGBACK BRIDGING SPLICE DETAIL

NOTE: Details 1 and 2 are the preferred attachment methods

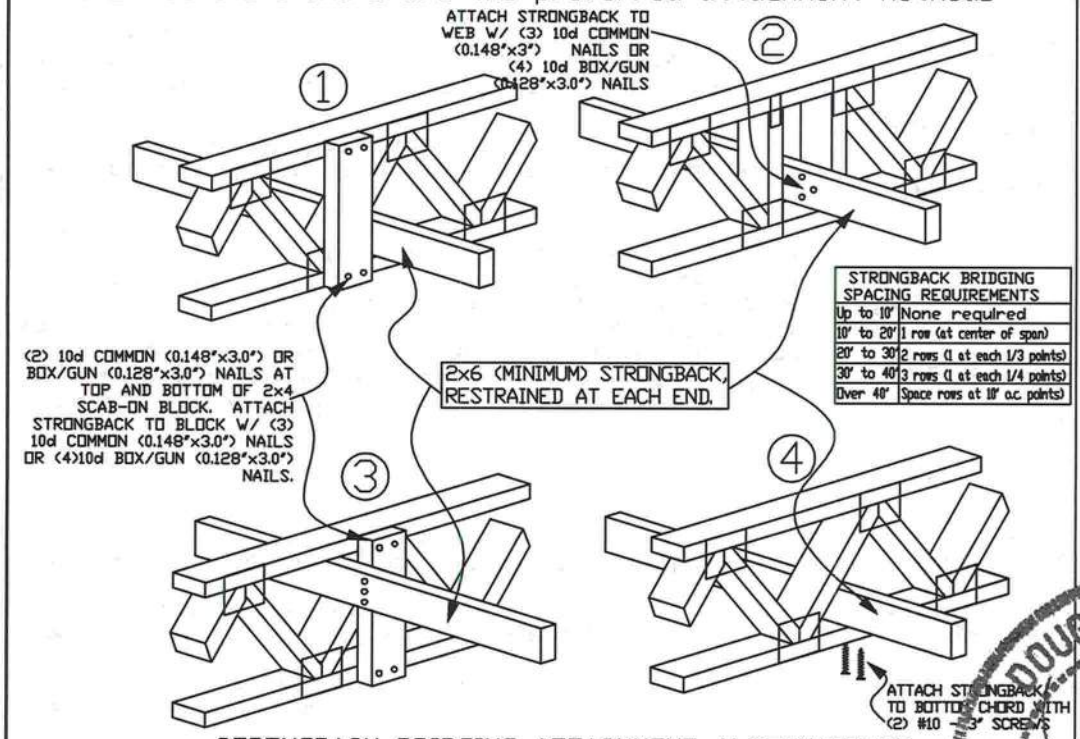

STRONGBACK BRIDGING SPACING REQUIREMENTS	
Up to 10'	None required
10' to 20'	1 row (at center of span)
20' to 30'	2 rows (1 at each 1/3 points)
30' to 40'	3 rows (1 at each 1/4 points)
Over 40'	Space rows at 10' o.c. points)

STRONGBACK BRIDGING ATTACHMENT ALTERNATIVES

- All scab-on blocks shall be a minimum 2x4 "stress graded lumber."
- All strongback bridging and bracing shall be a minimum 2x6 "stress graded lumber."
- The purpose of strongback bridging is to develop load sharing between individual trusses, resulting in an overall increase in the stiffness of the floor system. 2x6 strongback bridging, positioned as shown in details, is recommended at 10' -0" o.c. (max.)
- The terms "bridging" and "bracing" are sometimes mistakenly used interchangeably. "Bracing" is an important structural requirement of any floor or roof system. Refer to the Truss Design Drawing (TDD) for the bracing requirements for each individual truss component. "Bridging," particularly "strongback bridging" is a recommendation for a truss system to help control vibration. In addition to aiding in the distribution of point loads between adjacent truss, strongback bridging serves to reduce "bounce" or residual vibration resulting from moving point loads, such as footsteps.

The performance of all floor systems are enhanced by the installation of strongback bridging and therefore is strongly recommended by Alpine.

For additional information regarding strongback bridging, refer to BCSI (Building Component Safety Information).

DOUGLAS FLEMING LICENSE No. 66648 STATE OF FLORIDA PROFESSIONAL ENGINEER

#0278 04/14/2017

ALPINE AN ITW COMPANY
13723 Riverport Drive
Suite 200
Maryland Heights, MO 63043

TC LL	PSF	REF STRONGBACK
TC DL	PSF	DATE 10/01/14
BC DL	PSF	DRWG STRBRIBR1014
BC LL	PSF	
TOT. LD.	PSF	
DUR. FAC.	1.00	
SPACING		

Commentary: Deflection and Camber

Camber may be built into trusses to compensate for the vertical deflection that results from the application of loads. Providing camber has the following advantages:

- Helps to ensure level ceilings and floors after dead loads are applied.
- Facilitates drainage to avoid ponding on flat or low slope roofs.
- Compensates for different deflection characteristics between adjacent trusses.
- Improves appearance of garage door headers and other long spans that can appear to 'sag.'
- Avoids 'dips' in roof ridgelines at the transition from the gable to adjacent clear span trusses.

In accordance with ANSI/TPI 1 the Building Designer, through the Construction Documents, shall provide the location, direction, and magnitude of all loads attributable to ponding that may occur due to the design of the roof drainage system. The Building Designer shall also specify any dead load, live load, and in-service creep deflection criteria for flat or low-slope roofs subject to ponding loads.

The amount of camber is dependent on the truss type, span, loading, application, etceteras.

More restrictive limits for allowable deflection and slenderness ratio (L/D) may be required to help control vibration.

The following tables are provided as guidelines for limiting deflection and estimating camber. Conditions or codes may exist that require exceeding these recommendations, or past experience may warrant using more stringent limitations.

L = Span of Truss (inches)
D = Depth of Truss at Deflection Point (inches)

Recommended Truss Deflection Limits

Truss Type	L/D	Deflection Limits: Live Load	Deflection Limits: Total Load
Pitched Roof Trusses	24	L/240 (vertical)	L/180 (vertical)
Floor of Room-In-Attic Trusses	24	L/360 (vertical)	L/240 (vertical)
Flat or Shallow Pitched Roof Trusses	24	L/360 (vertical)	L/240 (vertical)
Residential Floor Trusses	24	L/360 (vertical)	L/240 (vertical)
Commercial Floor Trusses	20	L/480 (vertical)	L/240 (vertical)
Scissors Trusses	24	0.75" (horizontal)	1.25" (horizontal)

Truss Type	Recommended Camber
Pitched Trusses	1.00 x Deflection from Actual Dead Load
Sloping Parallel Chord Trusses	1.5 x Vertical Deflection from Actual Dead Load
Floor Trusses	(0.25 x Deflection from Live Load) + Actual Dead Load
Flat Roof Trusses	(0.25 x Deflection from Live Load) + (1.5 x Design Dead Load Deflection)

Note: The actual dead load may be considerably less than the design dead load.

DOUGLAS FLEMING LICENSE No. 66648 STATE OF FLORIDA PROFESSIONAL ENGINEER

#0278 04/14/2017

ALPINE™ AN ITW COMPANY
13723 Riverport Drive
Suite 200
Maryland Heights, MO 63043

REF	DEFLEC/CAMB
DATE	10/01/14
DRWG	DEFLCAMB1014

Alpine, an ITW Company
2400 Lake Orange Dr., Suite 150
Orlando, FL 32837
Phone: (800)755-6001
alpineitw.com

Site Information:

Customer: W. B. Howland Company, Inc.	*Job Number:* 16-0982
JobDescription: HUBBART RESIDENCE	
Address:	*City, State, Zip:*

Name, Address and License # of Structural EOR if one exists for the building:

Name:	*License #:*	*State:*
Address:	*City, State, Zip:*	

Job Engineering Criteria:

Design Code: FBC 2014 RES		*View Version:* 16.02.01.0131.17	*JRef #:* 1VZZ2150001
Wind Standard: ASCE 7-10	*Wind Speed (mph):* 130	*Roof Load (psf):* 20.00-10.00- 0.00-10.00	*Floor Load (psf):* None

This package contains a job notes page, 129 truss drawings and 6 details.

Item	Seal #	Truss
1	104.17.1303.03293	A01
3	104.17.1303.06213	A03
5	104.17.1303.11927	A05
7	104.17.1303.15690	A07
9	104.17.1303.18120	B02
11	104.17.1303.30213	B04
13	104.17.1303.44063	B06
15	104.17.1303.47937	B08
17	104.17.1303.51540	B10
19	104.17.1303.55843	C01
21	104.17.1303.58863	C03
23	104.17.1304.01573	C05
25	104.17.1304.04093	C07
27	104.17.1304.06860	C09
29	104.17.1304.11487	C11
31	104.17.1304.13883	C13
33	104.17.1304.17923	D02
35	104.17.1304.42197	D04

Item	Seal #	Truss
2	104.17.1303.04573	A02
4	104.17.1303.07403	A04
6	104.17.1303.13677	A06
8	104.17.1303.17017	B01
10	104.17.1303.19257	B03
12	104.17.1303.31377	B05
14	104.17.1303.45850	B07
16	104.17.1303.50207	B09
18	104.17.1303.53390	B11
20	104.17.1303.57460	C02
22	104.17.1304.00157	C04
24	104.17.1304.02927	C06
26	104.17.1304.05340	C08
28	104.17.1304.10340	C10
30	104.17.1304.12583	C12
32	104.17.1304.16780	D01
34	104.17.1304.40830	D03
36	104.17.1304.43370	D05

DOUGLAS FLEMING
LICENSE
No. 66648
STATE OF
FLORIDA
PROFESSIONAL ENGINEER

This document has been electronically signed and sealed using a Digital Signature. Printed copies without an original signature must be verified using the original electronic version.

04/14/2017

Alpine, an ITW Company
2400 Lake Orange Dr., Suite 150
Orlando, FL 32837
Phone: (800)755-6001
alpineitw.com

Site Information:

Customer: W. B. Howland Company, Inc.	*Job Number:* 16-0982
JobDescription: HUBBART RESIDENCE	
Address:	*City, State, Zip:*

Item	Seal #	Truss
37	104.17.1304.45150	D06
39	104.17.1304.55213	G01
41	104.17.1305.14353	G03
43	104.17.1305.23290	G05
45	104.17.1305.31647	G07
47	104.17.1305.42047	G09
49	104.17.1305.44710	H02
51	104.17.1305.46887	J01A
53	104.17.1305.50790	J03
55	104.17.1305.55300	J04
57	104.17.1306.04413	J05
59	104.17.1306.07190	J07
61	104.17.1306.12680	J09
63	104.17.1306.15183	J11
65	104.17.1306.27963	J13
67	104.17.1306.30693	J15
69	104.17.1306.34477	J17
71	104.17.1306.44420	J19
73	104.17.1306.47333	J21
75	104.17.1306.50987	J23
77	104.17.1306.54093	J25
79	104.17.1306.56203	J27
81	104.17.1307.03237	K01
83	104.17.1307.09003	K03
85	104.17.1307.11603	K05
87	104.17.1307.13913	K07
89	104.17.1307.16237	L02
91	104.17.1307.21643	M02

Item	Seal #	Truss
38	104.17.1304.49213	D07
40	104.17.1305.09723	G02
42	104.17.1305.21097	G04
44	104.17.1305.29900	G06
46	104.17.1305.33467	G08
48	104.17.1305.43470	H01
50	104.17.1305.45783	J01
52	104.17.1305.48353	J02
54	104.17.1305.53703	J03A
56	104.17.1305.56540	J04A
58	104.17.1306.05880	J06
60	104.17.1306.11533	J08
62	104.17.1306.13770	J10
64	104.17.1306.26760	J12
66	104.17.1306.29043	J14
68	104.17.1306.31693	J16
70	104.17.1306.35990	J18
72	104.17.1306.46190	J20
74	104.17.1306.49530	J22
76	104.17.1306.52770	J24
78	104.17.1306.55193	J26
80	104.17.1306.57200	J28
82	104.17.1307.04297	K02
84	104.17.1307.10300	K04
86	104.17.1307.12780	K06
88	104.17.1307.14997	L01
90	104.17.1307.19727	M01
92	104.17.1307.23490	M03

DOUGLAS FLEMING
LICENSE
No. 66648
STATE OF
FLORIDA
PROFESSIONAL ENGINEER

This document has been electronically signed and sealed using a Digital Signature. Printed copies without an original signature must be verified using the original electronic version.

04/14/2017

Alpine, an ITW Company
2400 Lake Orange Dr., Suite 150
Orlando, FL 32837
Phone: (800)755-6001
alpineitw.com

Site Information:

Customer: W. B. Howland Company, Inc.	*Job Number:* 16-0982
JobDescription: HUBBART RESIDENCE	
Address:	*City, State, Zip:*

Item	Seal #	Truss
93	104.17.1307.24587	M04
95	104.17.1307.26913	M06
97	104.17.1308.00097	N01
99	104.17.1308.03420	N03
101	104.17.1308.06777	N05
103	104.17.1308.09393	N07
105	104.17.1308.12450	N09
107	104.17.1308.15443	P02
109	104.17.1308.18790	P03
111	104.17.1308.22333	P05
113	104.17.1308.25433	P07
115	104.17.1308.43793	P09
117	104.17.1308.46400	P11
119	104.17.1308.49877	P13
121	104.17.1308.52060	P15
123	104.17.1308.56243	P17
125	104.17.1309.03463	P19
127	104.17.1309.08540	P21
129	104.17.1309.12480	R02

Item	Seal #	Truss
94	104.17.1307.25800	M05
96	104.17.1307.28857	M07
98	104.17.1308.02193	N02
100	104.17.1308.05260	N04
102	104.17.1308.08197	N06
104	104.17.1308.10607	N08
106	104.17.1308.13540	P01
108	104.17.1308.16810	P02A
110	104.17.1308.20223	P04
112	104.17.1308.23797	P06
114	104.17.1308.33987	P08
116	104.17.1308.45250	P10
118	104.17.1308.48360	P12
120	104.17.1308.50877	P14
122	104.17.1308.54107	P16
124	104.17.1309.02233	P18
126	104.17.1309.07483	P20
128	104.17.1309.09737	R01

DOUGLAS FLEMING
LICENSE
No. 66648
STATE OF
FLORIDA
PROFESSIONAL ENGINEER

This document has been electronically signed and sealed using a Digital Signature. Printed copies without an original signature must be verified using the original electronic version.

04/14/2017

Job Number: 16-0982 HUBBART RESIDENCE **Truss Label:** A01	Ply: 2 Qty: 1	SEQN: 468426 / T58 HIPS FROM: CDM	Cust: R215 JRef: 1VZZ2150001 DrwNo: 104.17.1303.03293 KM / DF 04/14/2017

2 Complete Trusses Required

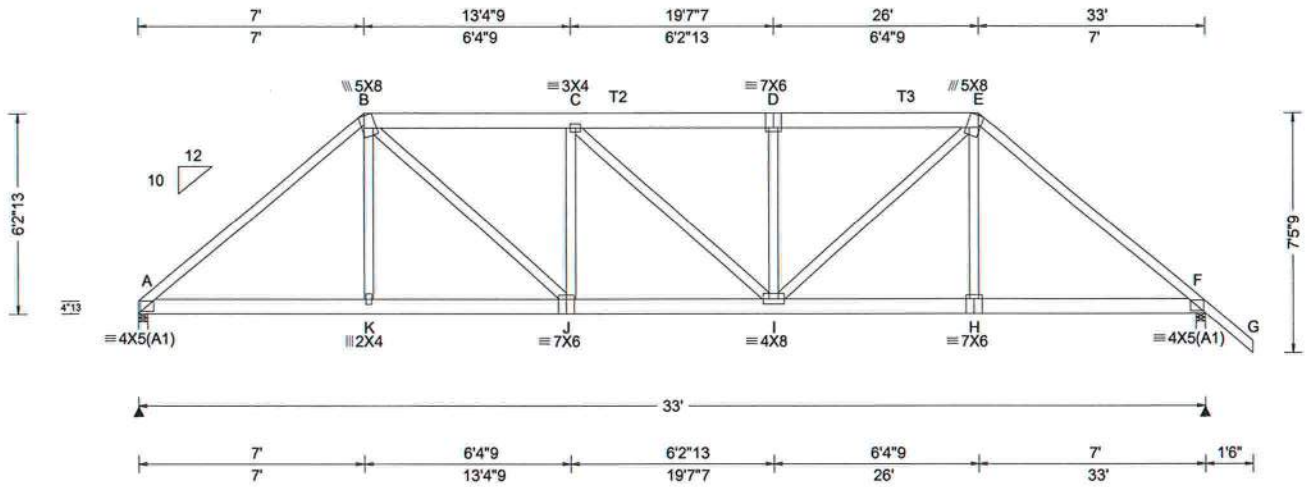

Loading Criteria (psf)

TCLL: 20.00
TCDL: 10.00
BCLL: 0.00
BCDL: 10.00
Des Ld: 40.00
NCBCLL: 0.00
Soffit: 2.00
Load Duration: 1.25
Spacing: 24.0 "

Wind Criteria

Wind Std: ASCE 7-10
Speed: 130 mph
Enclosure: Closed
Risk Category: II
EXP: C
Mean Height: 15.00 ft
TCDL: 5.0 psf
BCDL: 5.0 psf
MWFRS Parallel Dist: 0 to h/2
C&C Dist a: 3.30 ft
Loc. from endwall: not in 4.50 ft
GCpi: 0.18
Wind Duration: 1.60

Snow Criteria (Pg,Pf in PSF)

Pg: NA Ct: NA CAT: NA
Pf: NA Ce: NA
Lu: NA Cs: NA
Snow Duration: NA

Code / Misc Criteria

Bldg Code: FBC 2014 RES
TPI Std: 2007
Rep Factors Used: No
FT/RT:20(0)/10(0)
Plate Type(s):
WAVE

Defl/CSI Criteria

PP Deflection in	loc	L/defl	L/#
VERT(LL): 0.073	D	999	240
VERT(TL): 0.187	D	999	180
HORZ(LL): 0.025	H	-	-
HORZ(TL): 0.064	H	-	-

Creep Factor: 1.5
Max TC CSI: 0.150
Max BC CSI: 0.236
Max Web CSI: 0.112

VIEW Ver: 16.02.01B.0131.17

▲ Maximum Reactions (lbs)

Loc	R	/ U	/ Rw	/ Rh	/ RL	/ W
A	3475	/ 917	/ -	/ -	/ -	/ 3.5
F	3576	/ 953	/ -	/ -	/ -	/ 3.5

Wind reactions based on MWFRS
A Min Brg Width Req = 1.5
F Min Brg Width Req = 1.5
Bearings A & F are a rigid surface.

Members not listed have forces less than 375#

Maximum Top Chord Forces Per Ply (lbs)

Chords	Tens.	Comp.	Chords	Tens.	Comp.
A - B	693	-2533	D - E	760	-2767
B - C	754	-2752	E - F	692	-2518
C - D	759	-2766			

Maximum Bot Chord Forces Per Ply (lbs)

Chords	Tens.	Comp.	Chords	Tens.	Comp.
A - K	1897	-513	I - H	1893	-513
K - J	1906	-515	H - F	1884	-512
J - I	2775	-765			

Maximum Web Forces Per Ply (lbs)

Webs	Tens.	Comp.	Webs	Tens.	Comp.
B - J	1154	-326	D - I	228	-464
J - C	232	-473	I - E	1180	-332

Lumber

Top chord 2x4 SP M-31 :T2, T3 2x6 SP M-31:
Bot chord 2x6 SP M-31
Webs 2x4 SP M-31

Nailnote

Nail Schedule:0.131"x3", min. nails
Top Chord: 1 Row @12.00" o.c.
Bot Chord: 1 Row @12.00" o.c.
Webs : 1 Row @ 4" o.c.
Use equal spacing between rows and stagger nails in each row to avoid splitting.

Special Loads

------(Lumber Dur.Fac.=1.25 / Plate Dur.Fac.=1.25)

TC- From 66 plf at 0.00 to 66 plf at 7.00
TC- From 33 plf at 7.00 to 33 plf at 19.62
TC- From 33 plf at 19.62 to 33 plf at 26.00
TC- From 66 plf at 26.00 to 66 plf at 34.50
BC- From 20 plf at 0.00 to 20 plf at 7.03
BC- From 10 plf at 7.03 to 10 plf at 13.24
BC- From 10 plf at 13.24 to 10 plf at 25.85
BC- From 20 plf at 25.85 to 20 plf at 33.00
BC- From 5 plf at 33.00 to 5 plf at 34.50
TC- 80 lb Conc. Load at 7.03
TC- 282 lb Conc. Load at 7.06
TC- 202 lb Conc. Load at 9.06,11.06,13.06,15.06 16.50,17.94,19.94,21.94,23.94
TC- 279 lb Conc. Load at 25.94
TC- 77 lb Conc. Load at 25.97
BC- 488 lb Conc. Load at 7.03
BC- 158 lb Conc. Load at 9.06,11.06,13.06,15.06 16.50,17.94,19.94,21.94,23.94
BC- 472 lb Conc. Load at 25.97

Purlins

In lieu of structural panels use purlins to brace all flat TC @ 24" oc.

Wind

Wind loads and reactions based on MWFRS.

#0 278

04/14/2017

****WARNING**** READ AND FOLLOW ALL NOTES ON THIS DRAWING!
****IMPORTANT**** FURNISH THIS DRAWING TO ALL CONTRACTORS INCLUDING THE INSTALLERS

Trusses require extreme care in fabricating, handling, shipping, installing and bracing. Refer to and follow the latest edition of BCSI (Building Component Safety Information, by TPI and SBCA) for safety practices prior to performing these functions. Installers shall provide temporary bracing per BCSI. Unless noted otherwise,top chord shall have properly attached structural sheathing and bottom chord shall have a properly attached rigid ceiling. Locations shown for permanent lateral restraint of webs shall have bracing installed per BCSI sections B3, B7, or B10, as applicable. Apply plates to each face of truss and position as shown above and on the Joint Details, unless noted otherwise. Refer to drawings 160A-Z for standard plate positions.

Alpine, a division of ITW Building Components Group Inc. shall not be responsible for any deviation from this drawing,any failure to build the truss in conformance with ANSI/TPI 1, or for handling, shipping, installation and bracing of trusses**A seal on this drawing or cover page listing this drawing, indicates acceptance of professional engineering responsibility solely for the design shown. The suitability and use of this drawing for any structure is the responsibility of the Building Designer per ANSI/TPI 1 Sec.2.**

For more information see this job's general notes page and these web sites: ALPINE: www.alpineitw.com; TPI: www.tpinst.org; SBCA: www.sbcindustry.com; ICC: www.iccsafe.org

ALPINE
AN ITW COMPANY
2400 Lake Orange Dr.
Suite 150
Orlando FL, 32837

Job Number: 16-0982 HUBBART RESIDENCE **Truss Label:** A02	Ply: 1 Qty: 1	SEQN: 468403 / T103 HIPS FROM: CDM	Cust: R215 JRef: 1VZZ2150001 DrwNo: 104.17.1303.04573 KM / DF 04/14/2017

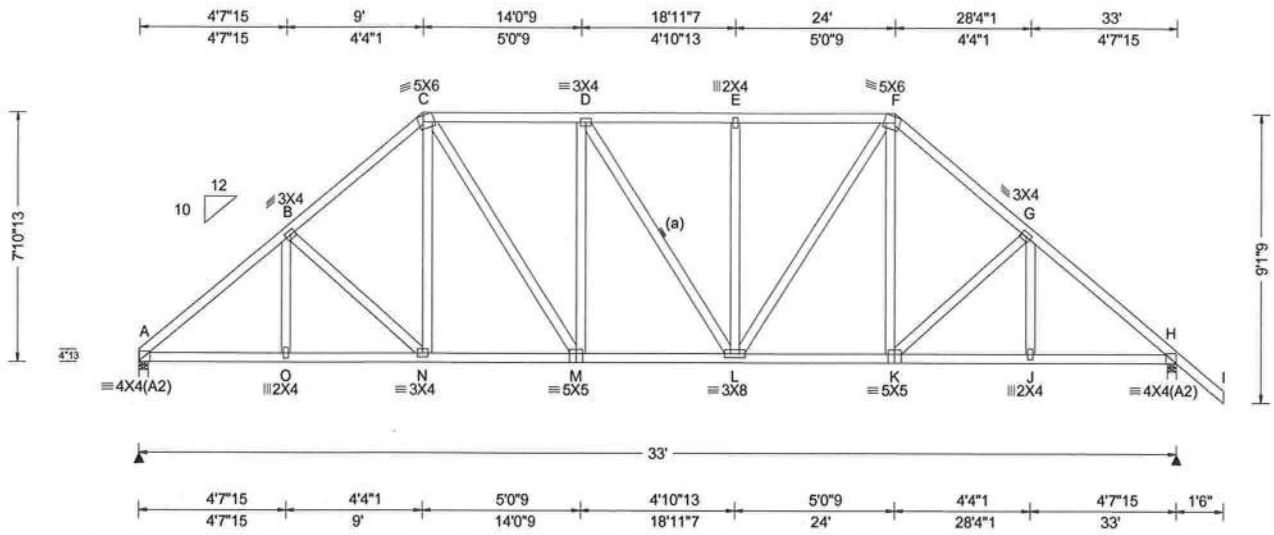

Loading Criteria (psf)

TCLL:	20.00
TCDL:	10.00
BCLL:	0.00
BCDL:	10.00
Des Ld:	40.00
NCBCLL:	10.00
Soffit:	2.00

Load Duration: 1.25
Spacing: 24.0 "

Wind Criteria
Wind Std: ASCE 7-10
Speed: 130 mph
Enclosure: Closed
Risk Category: II
EXP: C
Mean Height: 15.00 ft
TCDL: 5.0 psf
BCDL: 5.0 psf
MWFRS Parallel Dist: h/2 to h
C&C Dist a: 3.30 ft
Loc. from endwall: not in 9.00 ft
GCpi: 0.18
Wind Duration: 1.60

Snow Criteria (Pg,Pf in PSF)
Pg: NA Ct: NA CAT: NA
Pf: NA Ce: NA
Lu: NA Cs: NA
Snow Duration: NA

Code / Misc Criteria
Bldg Code: FBC 2014 RES
TPI Std: 2007
Rep Factors Used: Yes
FT/RT:20(0)/10(0)
Plate Type(s):
WAVE

Defl/CSI Criteria

PP Deflection in	loc	L/defl	L/#
VERT(LL): 0.052	E	999	240
VERT(TL): 0.141	E	999	180
HORZ(LL): 0.027	J	-	-
HORZ(TL): 0.074	J	-	-

Creep Factor: 1.5
Max TC CSI: 0.163
Max BC CSI: 0.242
Max Web CSI: 0.189

VIEW Ver: 16.02.01B.0131.17

▲Maximum Reactions (lbs)

Loc	R	/ U	/ Rw	/ Rh	/ RL	/ W
A	1417	/ 222	/ 820	/ -	/ 273	/ 3.5
H	1529	/ 249	/ 919	/ -	/ -	/ 3.5

Wind reactions based on MWFRS
A Min Brg Width Req = 1.5
H Min Brg Width Req = 1.5
Bearings A & H are a rigid surface.

Members not listed have forces less than 375#

Maximum Top Chord Forces Per Ply (lbs)

Chords	Tens.	Comp.	Chords	Tens.	Comp.
A - B	453	- 1926	E - F	473	- 1493
B - C	480	- 1671	F - G	465	- 1661
C - D	473	- 1486	G - H	430	- 1906
D - E	472	- 1492			

Maximum Bot Chord Forces Per Ply (lbs)

Chords	Tens.	Comp.	Chords	Tens.	Comp.
A - O	1400	- 226	L - K	1209	- 127
O - N	1399	- 226	K - J	1376	- 219
N - M	1214	- 124	J - H	1376	- 219
M - L	1498	- 197			

Maximum Web Forces Per Ply (lbs)

Webs	Tens.	Comp.	Webs	Tens.	Comp.
C - M	500	- 125	L - F	512	- 132

Lumber
Top chord 2x4 SP M-31
Bot chord 2x4 SP M-31
Webs 2x4 SP M-31

Bracing
(a) Continuous lateral restraint equally spaced on member.

Purlins
In lieu of structural panels use purlins to brace all flat TC @ 24" oc.

Wind
Wind loads based on MWFRS with additional C&C member design.

DOUGLAS FLEMING
LICENSE
No. 66648
STATE OF
FLORIDA
PROFESSIONAL ENGINEER
#0 278

04/14/2017

****WARNING**** READ AND FOLLOW ALL NOTES ON THIS DRAWING!
****IMPORTANT**** FURNISH THIS DRAWING TO ALL CONTRACTORS INCLUDING THE INSTALLERS

Trusses require extreme care in fabricating, handling, shipping, installing and bracing. Refer to and follow the latest edition of BCSI (Building Component Safety Information, by TPI and SBCA) for safety practices prior to performing these functions. Installers shall provide temporary bracing per BCSI. Unless noted otherwise,top chord shall have properly attached structural sheathing and bottom chord shall have a properly attached rigid ceiling. Locations shown for permanent lateral restraint of webs shall have bracing installed per BCSI sections B3, B7, or B10, as applicable. Apply plates to each face of truss and position as shown above and on the Joint Details, unless noted otherwise. Refer to drawings 160A-Z for standard plate positions.

Alpine, a division of ITW Building Components Group Inc. shall not be responsible for any deviation from this drawing,any failure to build the truss in conformance with ANSI/TPI 1, or for handling, shipping, installation and bracing of trusses**A seal on this drawing or cover page listing this drawing, indicates acceptance of professional engineering responsibility solely for the design shown. The suitability and use of this drawing for any structure is the responsibility of the Building Designer per ANSI/TPI 1 Sec.2.**

For more information see this job's general notes page and these web sites: ALPINE: www.alpineitw.com; TPI: www.tpinst.org; SBCA: www.sbcindustry.com; ICC: www.iccsafe.org

ALPINE
AN ITW COMPANY
2400 Lake Orange Dr.
Suite 150
Orlando FL, 32837

Job Number: 16-0982 HUBBART RESIDENCE **Truss Label:** A03	Ply: 1 Qty: 1	SEQN: 468405 / T102 HIPS FROM: CDM	Cust: R215 JRef: 1VZZ2150001 DrwNo: 104.17.1303.06213 KM / DF 04/14/2017

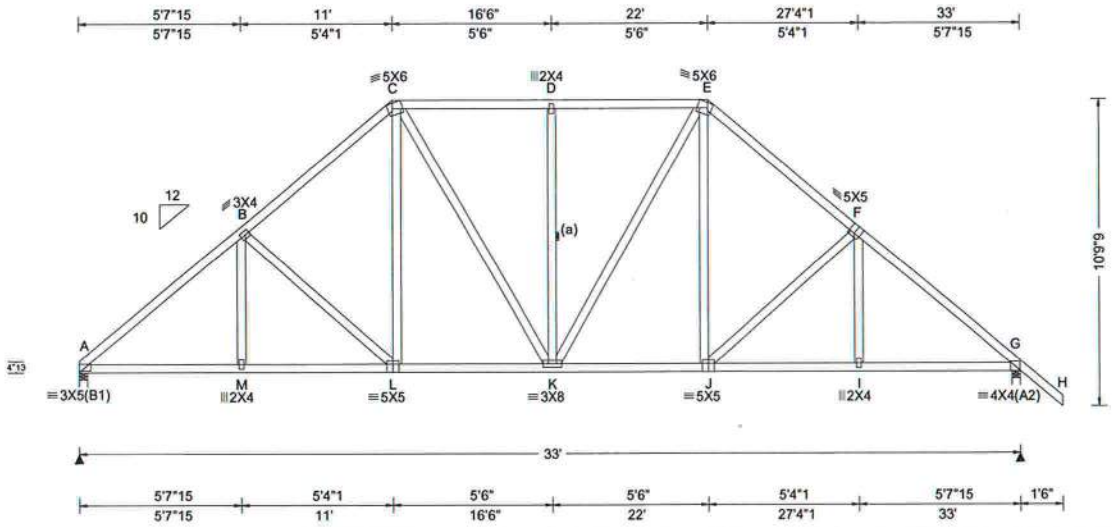

Loading Criteria (psf)

TCLL:	20.00
TCDL:	10.00
BCLL:	0.00
BCDL:	10.00
Des Ld:	40.00
NCBCLL:	10.00
Soffit:	2.00

Load Duration: 1.25
Spacing: 24.0 "

Wind Criteria
Wind Std: ASCE 7-10
Speed: 130 mph
Enclosure: Closed
Risk Category: II
EXP: C
Mean Height: 15.00 ft
TCDL: 5.0 psf
BCDL: 5.0 psf
MWFRS Parallel Dist: h/2 to h
C&C Dist a: 3.30 ft
Loc. from endwall: not in 9.00 ft
GCpi: 0.18
Wind Duration: 1.60

Snow Criteria (Pg,Pf in PSF)
Pg: NA Ct: NA CAT: NA
Pf: NA Ce: NA
Lu: NA Cs: NA
Snow Duration: NA

Code / Misc Criteria
Bldg Code: FBC 2014 RES
TPI Std: 2007
Rep Factors Used: Yes
FT/RT:20(0)/10(0)
Plate Type(s):
WAVE

Defl/CSI Criteria

PP Deflection in	loc	L/defl	L/#
VERT(LL): 0.047	D	999	240
VERT(TL): 0.126	D	999	180
HORZ(LL): 0.025	I	-	-
HORZ(TL): 0.069	I	-	-

Creep Factor: 1.5
Max TC CSI: 0.172
Max BC CSI: 0.223
Max Web CSI: 0.185

VIEW Ver: 16.02.01B.0131.17

▲ Maximum Reactions (lbs)

Loc	R	/ U	/ Rw	/ Rh	/ RL	/ W
A	1417	/ 216	/ 835	/ -	/ 324	/ 3.5
G	1529	/ 243	/ 934	/ -	/ -	/ 3.5

Wind reactions based on MWFRS
A Min Brg Width Req = 1.5
G Min Brg Width Req = 1.5
Bearings A & G are a rigid surface.

Members not listed have forces less than 375#

Maximum Top Chord Forces Per Ply (lbs)

Chords	Tens.Comp.	Chords	Tens. Comp.
A - B	435 - 1914	D - E	435 - 1260
B - C	463 - 1574	E - F	448 - 1568
C - D	435 - 1260	F - G	413 - 1898

Maximum Bot Chord Forces Per Ply (lbs)

Chords	Tens.Comp.	Chords	Tens. Comp.
A - M	1381 - 197	K - J	1117 - 73
M - L	1380 - 197	J - I	1361 - 192
L - K	1119 - 99	I - G	1362 - 192

Maximum Web Forces Per Ply (lbs)

Webs	Tens.Comp.	Webs	Tens. Comp.
C - L	397 - 99	E - J	392 - 93

Lumber
Top chord 2x4 SP M-31
Bot chord 2x4 SP M-31
Webs 2x4 SP M-31

Bracing
(a) Continuous lateral restraint equally spaced on member.

Purlins
In lieu of structural panels use purlins to brace all flat TC @ 24" oc.

Wind
Wind loads based on MWFRS with additional C&C member design.

DOUGLAS FLEMING
LICENSE
No. 66648
STATE OF
FLORIDA
PROFESSIONAL ENGINEER
#0 278

04/14/2017

****WARNING**** READ AND FOLLOW ALL NOTES ON THIS DRAWING!
****IMPORTANT**** FURNISH THIS DRAWING TO ALL CONTRACTORS INCLUDING THE INSTALLERS

Trusses require extreme care in fabricating, handling, shipping, installing and bracing. Refer to and follow the latest edition of BCSI (Building Component Safety Information, by TPI and SBCA) for safety practices prior to performing these functions. Installers shall provide temporary bracing per BCSI. Unless noted otherwise,top chord shall have properly attached structural sheathing and bottom chord shall have a properly attached rigid ceiling. Locations shown for permanent lateral restraint of webs shall have bracing installed per BCSI sections B3, B7, or B10, as applicable. Apply plates to each face of truss and position as shown above and on the Joint Details, unless noted otherwise. Refer to drawings 160A-Z for standard plate positions.

Alpine, a division of ITW Building Components Group Inc. shall not be responsible for any deviation from this drawing,any failure to build the truss in conformance with ANSI/TPI 1, or for handling, shipping, installation and bracing of trusses**A seal on this drawing or cover page listing this drawing, indicates acceptance of professional engineering responsibility solely for the design shown. The suitability and use of this drawing for any structure is the responsibility of the Building Designer per ANSI/TPI 1 Sec.2.**

For more information see this job's general notes page and these web sites: ALPINE: www.alpineitw.com; TPI: www.tpinst.org; SBCA: www.sbcindustry.com; ICC: www.iccsafe.org

ALPINE™ AN ITW COMPANY
2400 Lake Orange Dr.
Suite 150
Orlando FL, 32837

Job Number: 16-0982 HUBBART RESIDENCE **Truss Label:** A04	Ply: 1 Qty: 1	SEQN: 468407 / T78 SPEC FROM: CDM	Cust: R215 JRef: 1VZZ2150001 DrwNo: 104.17.1303.07403 KM / DF 04/14/2017

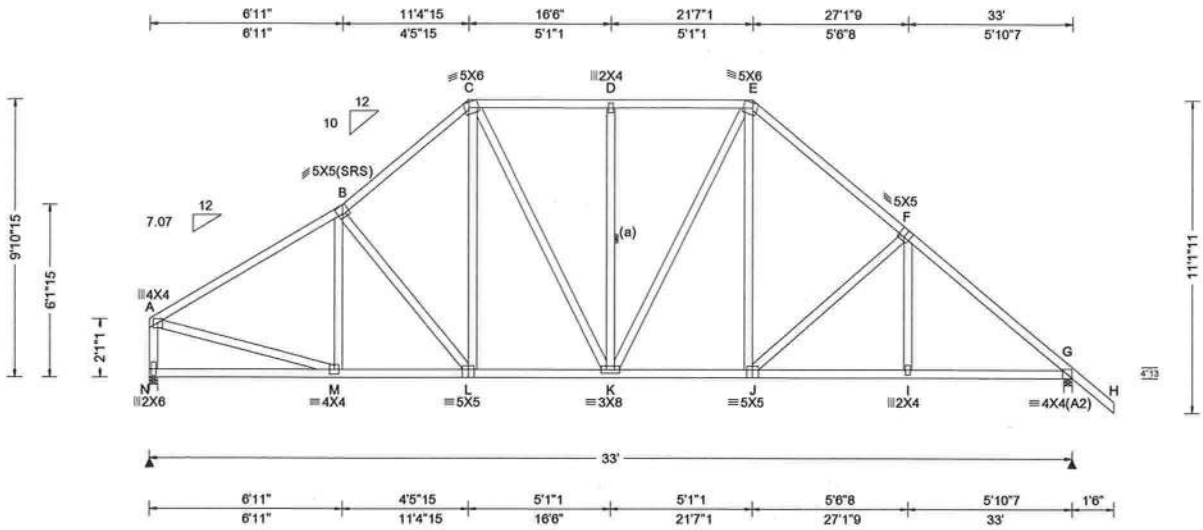

Loading Criteria (psf)

TCLL:	20.00
TCDL:	10.00
BCLL:	0.00
BCDL:	10.00
Des Ld:	40.00
NCBCLL:	10.00
Soffit:	2.00

Load Duration: 1.25
Spacing: 24.0 "

Wind Criteria
Wind Std: ASCE 7-10
Speed: 130 mph
Enclosure: Closed
Risk Category: II
EXP: C
Mean Height: 15.00 ft
TCDL: 5.0 psf
BCDL: 5.0 psf
MWFRS Parallel Dist: h/2 to h
C&C Dist a: 3.30 ft
Loc. from endwall: not in 9.00 ft
GCpi: 0.18
Wind Duration: 1.60

Snow Criteria (Pg,Pf in PSF)
Pg: NA Ct: NA CAT: NA
Pf: NA Ce: NA
Lu: NA Cs: NA
Snow Duration: NA

Code / Misc Criteria
Bldg Code: FBC 2014 RES
TPI Std: 2007
Rep Factors Used: Yes
FT/RT:20(0)/10(0)
Plate Type(s):
WAVE

Defl/CSI Criteria

PP Deflection in	loc	L/defl	L/#
VERT(LL): 0.044	D	999	240
VERT(TL): 0.118	D	999	180
HORZ(LL): 0.020	I	-	-
HORZ(TL): 0.054	I	-	-

Creep Factor: 1.5
Max TC CSI: 0.319
Max BC CSI: 0.232
Max Web CSI: 0.229

VIEW Ver: 16.02.01B.0131.17

▲ Maximum Reactions (lbs)

Loc	R	/ U	/ Rw	/ Rh	/ RL	/ W
N	1379	/ 224	/ 794	/ -	/ 302	/ 3.5
G	1519	/ 241	/ 938	/ -	/ -	/ 3.5

Wind reactions based on MWFRS
N Min Brg Width Req = 1.5
G Min Brg Width Req = 1.5
Bearings N & G are a rigid surface.

Members not listed have forces less than 375#

Maximum Top Chord Forces Per Ply (lbs)

Chords	Tens.	Comp.	Chords	Tens.	Comp.
A - B	411	-1638	D - E	446	-1198
B - C	495	-1525	E - F	461	-1532
C - D	446	-1198	F - G	426	-1880

Maximum Bot Chord Forces Per Ply (lbs)

Chords	Tens.	Comp.	Chords	Tens.	Comp.
M - L	1336	-202	J - I	1346	-201
L - K	1084	-101	I - G	1347	-200
K - J	1084	-76			

Maximum Web Forces Per Ply (lbs)

Webs	Tens.	Comp.	Webs	Tens.	Comp.
A - N	336	-1319	C - L	420	-147
A - M	1322	-262	E - J	398	-98
B - L	203	-414			

Lumber
Top chord 2x4 SP M-31
Bot chord 2x4 SP M-31
Webs 2x4 SP M-31

Bracing
(a) Continuous lateral restraint equally spaced on member.

Purlins
In lieu of structural panels use purlins to brace all flat TC @ 24" oc.

Wind
Wind loads based on MWFRS with additional C&C member design.
Left end vertical not exposed to wind pressure.

DOUGLAS FLEMING
LICENSE
No. 66648
STATE OF
FLORIDA
PROFESSIONAL ENGINEER
#0 278

04/14/2017

****WARNING**** READ AND FOLLOW ALL NOTES ON THIS DRAWING!
****IMPORTANT**** FURNISH THIS DRAWING TO ALL CONTRACTORS INCLUDING THE INSTALLERS

Trusses require extreme care in fabricating, handling, shipping, installing and bracing. Refer to and follow the latest edition of BCSI (Building Component Safety Information, by TPI and SBCA) for safety practices prior to performing these functions. Installers shall provide temporary bracing per BCSI. Unless noted otherwise,top chord shall have properly attached structural sheathing and bottom chord shall have a properly attached rigid ceiling. Locations shown for permanent lateral restraint of webs shall have bracing installed per BCSI sections B3, B7, or B10, as applicable. Apply plates to each face of truss and position as shown above and on the Joint Details, unless noted otherwise. Refer to drawings 160A-Z for standard plate positions.

Alpine, a division of ITW Building Components Group Inc. shall not be responsible for any deviation from this drawing,any failure to build the truss in conformance with ANSI/TPI 1, or for handling, shipping, installation and bracing of trusses**A seal on this drawing or cover page listing this drawing, indicates acceptance of professional engineering responsibility solely for the design shown. The suitability and use of this drawing for any structure is the responsibility of the Building Designer per ANSI/TPI 1 Sec.2.**

For more information see this job's general notes page and these web sites: ALPINE: www.alpineitw.com; TPI: www.tpinst.org; SBCA: www.sbcindustry.com; ICC: www.iccsafe.org

ALPINE
AN ITW COMPANY
2400 Lake Orange Dr.
Suite 150
Orlando FL, 32837

Job Number: 16-0982 HUBBART RESIDENCE **Truss Label:** A05	Ply: 2 Qty: 1	SEQN: 468274 / T71 SPEC FROM: CDM	Cust: R215 JRef: 1VZZ2150001 DrwNo: 104.17.1303.11927 KM / DF 04/14/2017

2 Complete Trusses Required

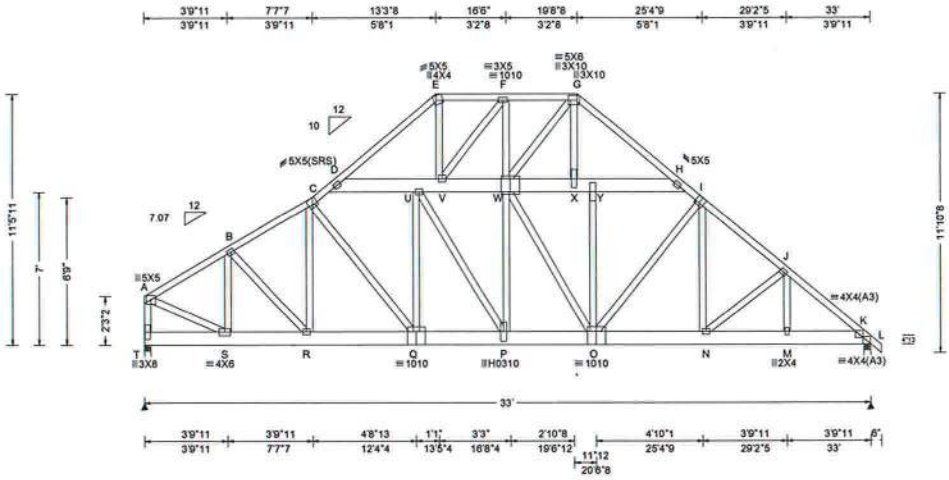

Loading Criteria (psf)

TCLL: 20.00
TCDL: 10.00
BCLL: 0.00
BCDL: 10.00
Des Ld: 40.00
NCBCLL: 0.00
Soffit: 2.00
Load Duration: 1.25
Spacing: 24.0 "

Wind Criteria

Wind Std: ASCE 7-10
Speed: 130 mph
Enclosure: Closed
Risk Category: II
EXP: C
Mean Height: 15.73 ft
TCDL: 5.0 psf
BCDL: 5.0 psf
MWFRS Parallel Dist: 0 to h/2
C&C Dist a: 3.30 ft
Loc. from endwall: not in 9.00 ft
GCpi: 0.18
Wind Duration: 1.60

Snow Criteria (Pg,Pf in PSF)

Pg: NA Ct: NA CAT: NA
Pf: NA Ce: NA
Lu: NA Cs: NA
Snow Duration: NA

Code / Misc Criteria

Bldg Code: FBC 2014 RES
TPI Std: 2007
Rep Factors Used: No
FT/RT:20(0)/10(0)
Plate Type(s):
WAVE, HS

Defl/CSI Criteria

PP Deflection in	loc	L/defl	L/#
VERT(LL): 0.084	O	999	240
VERT(TL): 0.214	O	999	180
HORZ(LL): 0.026	C	-	-
HORZ(TL): 0.066	C	-	-

Creep Factor: 1.5
Max TC CSI: 0.262
Max BC CSI: 0.324
Max Web CSI: 0.197

VIEW Ver: 16.02.01B.0131.17

▲ Maximum Reactions (lbs)

Loc	R	/ U	/ Rw	/ Rh	/ RL	/ W
T	4200	/ 674	/ -	/ -	/ -	/ 3.5
K	5240	/ 833	/ -	/ -	/ -	/ 3.5

Wind reactions based on MWFRS
T Min Brg Width Req = 1.7
K Min Brg Width Req = 2.2
Bearings T & K are a rigid surface.

Members not listed have forces less than 375#

Maximum Top Chord Forces Per Ply (lbs)

Chords	Tens.	Comp.	Chords	Tens.	Comp.
A - B	356	-2194	F - G	393	-2720
B - C	440	-2739	G - H	459	-3035
C - D	469	-2932	H - I	583	-3700
D - E	387	-2543	I - J	601	-3807
E - F	294	-2011	J - K	609	-3837

Maximum Bot Chord Forces Per Ply (lbs)

Chords	Tens.	Comp.	Chords	Tens.	Comp.
S - R	1916	-307	O - N	2870	-447
R - Q	2346	-371	N - M	2929	-460
Q - P	2326	-373	M - K	2928	-459
P - O	2548	-412			

Maximum Web Forces Per Ply (lbs)

Webs	Tens.	Comp.	Webs	Tens.	Comp.
A - T	340	-2059	F - W	935	-114
A - S	2070	-329	P - W	940	-108
S - B	169	-906	W - X	130	-685
B - R	671	-92	W - G	667	-86
R - C	91	-460	W - O	1016	-124
D - U	91	-421	X - G	1297	-174
U - V	135	-689	X - Y	136	-731
U - P	605	-89	Y - O	1253	-168
E - V	1467	-183	Y - H	136	-727
V - F	159	-1139			

Lumber

Top chord 2x4 SP M-31
Bot chord 2x8 SP M-31
Webs 2x4 SP M-31

Nailnote

Nail Schedule:0.131"x3", min. nails
Top Chord: 1 Row @12.00" o.c.
Bot Chord: 1 Row @ 7.50" o.c.
Webs : 1 Row @ 4" o.c.
Use equal spacing between rows and stagger nails in each row to avoid splitting.

Special Loads

------(Lumber Dur.Fac.=1.25 / Plate Dur.Fac.=1.25)

TC- From	63 plf at	0.00 to	63 plf at	7.62
TC- From	66 plf at	7.62 to	66 plf at	13.29
TC- From	63 plf at	13.29 to	63 plf at	15.84
TC- From	32 plf at	15.84 to	32 plf at	19.71
TC- From	66 plf at	19.71 to	66 plf at	33.50
BC- From	20 plf at	0.00 to	20 plf at	15.84
BC- From	10 plf at	15.84 to	10 plf at	19.84
BC- From	20 plf at	19.84 to	20 plf at	33.00
BC- From	5 plf at	33.00 to	5 plf at	33.50

PLB- 1144 lb Conc. Load at (15.84,10.04), (17.84,10.04)
PLB- 4480 lb Conc. Load at (19.84,10.04)

Plating Notes

All plates are 3X4 except as noted.

Purlins

In lieu of structural panels use purlins to brace all flat TC @ 24" oc.

Wind

Wind loads and reactions based on MWFRS.

Left end vertical not exposed to wind pressure.

Laterally brace TC below filler @ 24" O.C. (or as designed) Including a brace on TC directly above both ends of filler (if no rigid diaphragm exists at that point)

DOUGLAS FLEMING
LICENSE
No. 66648
STATE OF
FLORIDA
PROFESSIONAL ENGINEER

#0 278

04/14/2017

****WARNING**** READ AND FOLLOW ALL NOTES ON THIS DRAWING!
****IMPORTANT**** FURNISH THIS DRAWING TO ALL CONTRACTORS INCLUDING THE INSTALLERS

Trusses require extreme care in fabricating, handling, shipping, installing and bracing. Refer to and follow the latest edition of BCSI (Building Component Safety Information, by TPI and SBCA) for safety practices prior to performing these functions. Installers shall provide temporary bracing per BCSI. Unless noted otherwise,top chord shall have properly attached structural sheathing and bottom chord shall have a properly attached rigid ceiling. Locations shown for permanent lateral restraint of webs shall have bracing installed per BCSI sections B3, B7, or B10, as applicable. Apply plates to each face of truss and position as shown above and on the Joint Details, unless noted otherwise. Refer to drawings 160A-Z for standard plate positions.

Alpine, a division of ITW Building Components Group Inc. shall not be responsible for any deviation from this drawing,any failure to build the truss in conformance with ANSI/TPI 1, or for handling, shipping, installation and bracing of trusses**A seal on this drawing or cover page listing this drawing, indicates acceptance of professional engineering responsibility solely for the design shown. The suitability and use of this drawing for any structure is the responsibility of the Building Designer per ANSI/TPI 1 Sec.2.**

For more information see this job's general notes page and these web sites: ALPINE: www.alpineitw.com; TPI: www.tpinst.org; SBCA: www.sbcindustry.com; ICC: www.iccsafe.org

ALPINE
AN ITW COMPANY
2400 Lake Orange Dr.
Suite 150
Orlando FL, 32837

Job Number: 16-0982 HUBBART RESIDENCE **Truss Label:** A06	Ply: 1 Qty: 3	SEQN: 468409 / T46 MONO FROM: CDM	Cust: R215 JRef: 1VZZ2150001 DrwNo: 104.17.1303.13677 KM / DF 04/14/2017

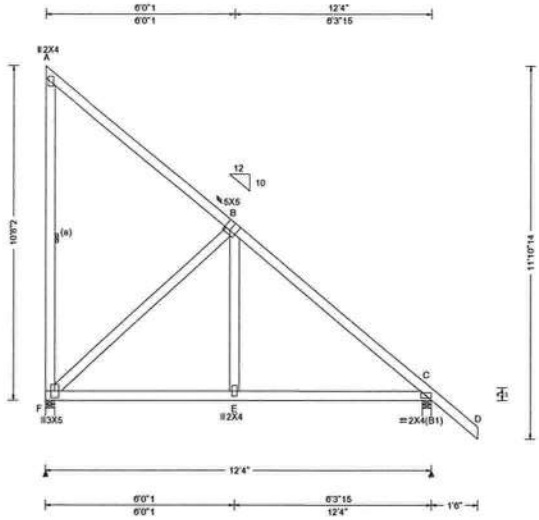

Loading Criteria (psf)
TCLL: 20.00
TCDL: 10.00
BCLL: 0.00
BCDL: 10.00
Des Ld: 40.00
NCBCLL: 10.00
Soffit: 2.00
Load Duration: 1.25
Spacing: 24.0 "

Wind Criteria
Wind Std: ASCE 7-10
Speed: 130 mph
Enclosure: Closed
Risk Category: II
EXP: C
Mean Height: 15.00 ft
TCDL: 5.0 psf
BCDL: 5.0 psf
MWFRS Parallel Dist: h/2 to h
C&C Dist a: 3.00 ft
Loc. from endwall: not in 9.00 ft
GCpi: 0.18
Wind Duration: 1.60

Snow Criteria (Pg,Pf in PSF)
Pg: NA Ct: NA CAT: NA
Pf: NA Ce: NA
Lu: NA Cs: NA
Snow Duration: NA

Code / Misc Criteria
Bldg Code: FBC 2014 RES
TPI Std: 2007
Rep Factors Used: Yes
FT/RT:20(0)/10(0)
Plate Type(s):
WAVE

Defl/CSI Criteria

PP Deflection in	loc	L/defl	L/#
VERT(LL): 0.004	E	999	240
VERT(TL): 0.012	E	999	180
HORZ(LL): 0.007	A	-	-
HORZ(TL): 0.012	A	-	-

Creep Factor: 1.5
Max TC CSI: 0.256
Max BC CSI: 0.187
Max Web CSI: 0.296

VIEW Ver: 16.02.01B.0131.17

▲ Maximum Reactions (lbs)

Loc	R	/ U	/ Rw	/ Rh	/ RL	/ W
F	516	/ 198	/ 433	/ -	/ 328	/ 3.5
C	652	/ -	/ 408	/ -	/ -	/ 3.5

Wind reactions based on MWFRS
F Min Brg Width Req = 1.5
C Min Brg Width Req = 1.5
Bearings F & C are a rigid surface.

Members not listed have forces less than 375#

Maximum Top Chord Forces Per Ply (lbs)

Chords	Tens.	Comp.
B - C	0	-576

Maximum Bot Chord Forces Per Ply (lbs)

Chords	Tens.	Comp.	Chords	Tens.	Comp.
F - E	418	0	E - C	419	0

Maximum Web Forces Per Ply (lbs)

Webs	Tens.	Comp.
F - B	234	-473

Lumber
Top chord 2x4 SP M-31
Bot chord 2x4 SP M-31
Webs 2x4 SP M-31

Bracing
(a) Continuous lateral restraint equally spaced on member.

Wind
Wind loads based on MWFRS with additional C&C member design.
Left end vertical not exposed to wind pressure.

Additional Notes
Full Height Blocking reinforcement required to prevent buckling of members over the bearings: bearing 1 located at 0.00'

DOUGLAS FLEMING
LICENSE
No. 66648
STATE OF
FLORIDA
PROFESSIONAL ENGINEER

#0 278

04/14/2017

****WARNING**** READ AND FOLLOW ALL NOTES ON THIS DRAWING!
****IMPORTANT**** FURNISH THIS DRAWING TO ALL CONTRACTORS INCLUDING THE INSTALLERS

Trusses require extreme care in fabricating, handling, shipping, installing and bracing. Refer to and follow the latest edition of BCSI (Building Component Safety Information, by TPI and SBCA) for safety practices prior to performing these functions. Installers shall provide temporary bracing per BCSI. Unless noted otherwise,top chord shall have properly attached structural sheathing and bottom chord shall have a properly attached rigid ceiling. Locations shown for permanent lateral restraint of webs shall have bracing installed per BCSI sections B3, B7, or B10, as applicable. Apply plates to each face of truss and position as shown above and on the Joint Details, unless noted otherwise. Refer to drawings 160A-Z for standard plate positions.

Alpine, a division of ITW Building Components Group Inc. shall not be responsible for any deviation from this drawing,any failure to build the truss in conformance with ANSI/TPI 1, or for handling, shipping, installation and bracing of trusses**A seal on this drawing or cover page listing this drawing, indicates acceptance of professional engineering responsibility solely for the design shown. The suitability and use of this drawing for any structure is the responsibility of the Building Designer per ANSI/TPI 1 Sec.2.**

For more information see this job's general notes page and these web sites: ALPINE: www.alpineitw.com; TPI: www.tpinst.org; SBCA: www.sbcindustry.com; ICC: www.iccsafe.org

ALPINE
AN ITW COMPANY
2400 Lake Orange Dr.
Suite 150
Orlando FL, 32837

Job Number: 16-0982 HUBBART RESIDENCE **Truss Label:** B01	Ply: 2 Qty: 1	SEQN: 468486 / T3 MONO FROM: CDM	Cust: R215 JRef: 1VZZ2150001 DrwNo: 104.17.1303.17017 KM / DF 04/14/2017

2 Complete Trusses Required

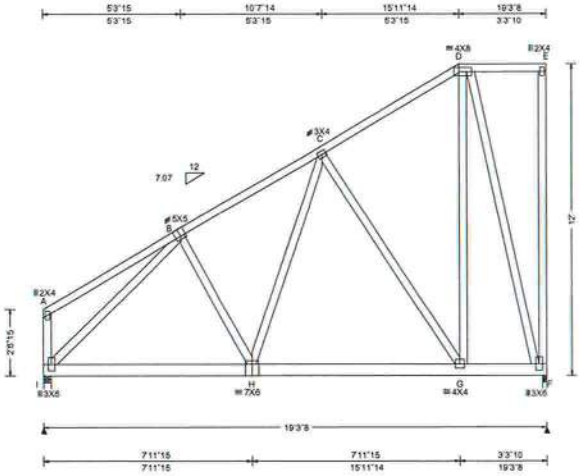

Loading Criteria (psf)	**Wind Criteria**	**Snow Criteria** (Pg,Pf in PSF)	**Defl/CSI Criteria**
TCLL: 20.00 TCDL: 10.00 BCLL: 0.00 BCDL: 10.00 Des Ld: 40.00 NCBCLL: 0.00 Soffit: 2.00 Load Duration: 1.25 Spacing: 24.0 "	Wind Std: ASCE 7-10 Speed: 130 mph Enclosure: Closed Risk Category: II EXP: C Mean Height: 17.29 ft TCDL: 5.0 psf BCDL: 5.0 psf MWFRS Parallel Dist: 0 to h/2 C&C Dist a: 3.00 ft Loc. from endwall: Any GCpi: 0.18 Wind Duration: 1.60	Pg: NA Ct: NA CAT: NA Pf: NA Ce: NA Lu: NA Cs: NA Snow Duration: NA **Code / Misc Criteria** Bldg Code: FBC 2014 RES TPI Std: 2007 Rep Factors Used: No FT/RT:20(0)/10(0) Plate Type(s): WAVE	PP Deflection in loc L/defl L/# VERT(LL): 0.020 H 999 240 VERT(TL): 0.051 H 999 180 HORZ(LL): 0.010 B - - HORZ(TL): 0.025 B - - Creep Factor: 1.5 Max TC CSI: 0.085 Max BC CSI: 0.232 Max Web CSI: 0.707 VIEW Ver: 16.02.01B.0131.17

▲ Maximum Reactions (lbs)

Loc	R	/ U	/ Rw	/ Rh	/ RL	/ W
I	1873	/ 387	/ -	/ 0	/ 0	/ 3.5
F	2443	/ 496	/ -	/ -	/ -	/ 1.9

Wind reactions based on MWFRS
I Min Brg Width Req = 1.5
F Min Brg Width Req = 1.5
Bearings I & F are a rigid surface.

Members not listed have forces less than 375#

Maximum Top Chord Forces Per Ply (lbs)

Chords	Tens.	Comp.	Chords	Tens.	Comp.
B - C	189	-924	C - D	95	-417

Maximum Bot Chord Forces Per Ply (lbs)

Chords	Tens.	Comp.	Chords	Tens.	Comp.
I - H	1428	-307	H - G	600	-126

Maximum Web Forces Per Ply (lbs)

Webs	Tens.	Comp.	Webs	Tens.	Comp.
I - B	214	-996	D - G	1168	-198
H - C	544	-70	D - F	224	-1147
C - G	120	-530			

Lumber

Top chord 2x4 SP M-31
Bot chord 2x6 SP M-31
Webs 2x4 SP M-31

Nailnote

Nail Schedule:0.131"x3", min. nails
Top Chord: 1 Row @12.00" o.c.
Bot Chord: 1 Row @10.50" o.c.
Webs : 1 Row @ 4" o.c.
Use equal spacing between rows and stagger nails in each row to avoid splitting.

Special Loads

------(Lumber Dur.Fac.=1.25 / Plate Dur.Fac.=1.25)

TC- From	63 plf at	0.00 to	63 plf at	15.99
TC- From	63 plf at	15.99 to	63 plf at	19.29
BC- From	20 plf at	0.00 to	20 plf at	19.29

BC- 129 lb Conc. Load at 0.77
BC- 215 lb Conc. Load at 3.60
BC- 301 lb Conc. Load at 6.43
BC- 387 lb Conc. Load at 9.26
BC- 473 lb Conc. Load at 12.09
BC- 559 lb Conc. Load at 14.92
BC- 645 lb Conc. Load at 17.74

Purlins

In lieu of structural panels use purlins to brace all flat TC @ 24" oc.

Wind

Wind loads and reactions based on MWFRS.

End verticals not exposed to wind pressure.

DOUGLAS FLEMING
LICENSE
No. 66648
STATE OF
FLORIDA
PROFESSIONAL ENGINEER

#0 278

04/14/2017

****WARNING**** READ AND FOLLOW ALL NOTES ON THIS DRAWING!
****IMPORTANT**** FURNISH THIS DRAWING TO ALL CONTRACTORS INCLUDING THE INSTALLERS

Trusses require extreme care in fabricating, handling, shipping, installing and bracing. Refer to and follow the latest edition of BCSI (Building Component Safety Information, by TPI and SBCA) for safety practices prior to performing these functions. Installers shall provide temporary bracing per BCSI. Unless noted otherwise,top chord shall have properly attached structural sheathing and bottom chord shall have a properly attached rigid ceiling. Locations shown for permanent lateral restraint of webs shall have bracing installed per BCSI sections B3, B7, or B10, as applicable. Apply plates to each face of truss and position as shown above and on the Joint Details, unless noted otherwise. Refer to drawings 160A-Z for standard plate positions.

Alpine, a division of ITW Building Components Group Inc. shall not be responsible for any deviation from this drawing,any failure to build the truss in conformance with ANSI/TPI 1, or for handling, shipping, installation and bracing of trusses**A seal on this drawing or cover page listing this drawing, indicates acceptance of professional engineering responsibility solely for the design shown. The suitability and use of this drawing for any structure is the responsibility of the Building Designer per ANSI/TPI 1 Sec.2.**

For more information see this job's general notes page and these web sites: ALPINE: www.alpineitw.com; TPI: www.tpinst.org; SBCA: www.sbcindustry.com; ICC: www.iccsafe.org

ALPINE
AN ITW COMPANY
2400 Lake Orange Dr.
Suite 150
Orlando FL, 32837

Job Number: 16-0982	Ply: 1	SEQN: 455369 / T62 COMN	Cust: R215 JRef: 1VZZ2150001
HUBBART RESIDENCE	Qty: 1	FROM: CDM	DrwNo: 104.17.1303.18120
Truss Label: B02			KM / DF 04/14/2017

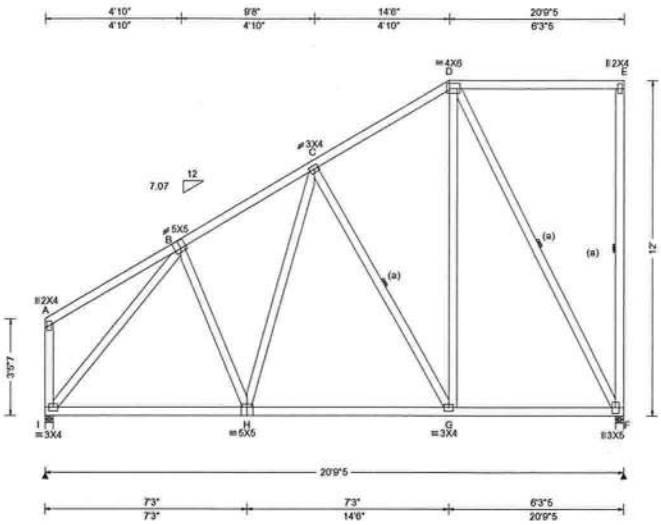

Loading Criteria (psf)

TCLL:	20.00
TCDL:	10.00
BCLL:	0.00
BCDL:	10.00
Des Ld:	40.00
NCBCLL:	10.00
Soffit:	2.00

Load Duration: 1.25
Spacing: 24.0 "

Wind Criteria
Wind Std: ASCE 7-10
Speed: 130 mph
Enclosure: Closed
Risk Category: II
EXP: C
Mean Height: 17.73 ft
TCDL: 5.0 psf
BCDL: 5.0 psf
MWFRS Parallel Dist: h/2 to h
C&C Dist a: 3.00 ft
Loc. from endwall: not in 9.00 ft
GCpi: 0.18
Wind Duration: 1.60

Snow Criteria (Pg,Pf in PSF)
Pg: NA Ct: NA CAT: NA
Pf: NA Ce: NA
Lu: NA Cs: NA
Snow Duration: NA

Code / Misc Criteria
Bldg Code: FBC 2014 RES
TPI Std: 2007
Rep Factors Used: Yes
FT/RT:20(0)/10(0)
Plate Type(s):
WAVE

Defl/CSI Criteria

PP Deflection in	loc	L/defl	L/#
VERT(LL): 0.014	C	999	240
VERT(TL): 0.036	C	999	180
HORZ(LL): 0.007	B	-	-
HORZ(TL): 0.017	B	-	-

Creep Factor: 1.5
Max TC CSI: 0.302
Max BC CSI: 0.209
Max Web CSI: 0.489

VIEW Ver: 16.01.00D.0413.17

▲ Maximum Reactions (lbs)

Loc	R	/ U	/ Rw	/ Rh	/ RL	/ W
I	871	/ 57	/ 560	/ -	/ 242	/ 3.5
F	858	/ 239	/ 525	/ -	/ -	/ 3.4

Wind reactions based on MWFRS
I Min Brg Width Req = 1.5
F Min Brg Width Req = 1.5
Bearings I & F are a rigid surface.

Members not listed have forces less than 375#

Maximum Top Chord Forces Per Ply (lbs)

Chords	Tens.	Comp.	Chords	Tens.	Comp.
B - C	155	- 705	C - D	119	- 476

Maximum Bot Chord Forces Per Ply (lbs)

Chords	Tens.	Comp.	Chords	Tens.	Comp.
I - H	1067	- 334	H - G	513	- 237

Maximum Web Forces Per Ply (lbs)

Webs	Tens.	Comp.	Webs	Tens.	Comp.
I - B	41	- 845	D - G	516	- 164
C - G	212	- 378	D - F	282	- 695

Lumber
Top chord 2x4 SP M-31
Bot chord 2x4 SP M-31
Webs 2x4 SP M-31

Bracing
(a) Continuous lateral restraint equally spaced on member.

Purlins
In lieu of structural panels use purlins to brace all flat TC @ 24" oc.

Wind
Wind loads based on MWFRS with additional C&C member design.
End verticals not exposed to wind pressure.

DOUGLAS FLEMING
LICENSE
No. 66648
STATE OF
FLORIDA
PROFESSIONAL ENGINEER

#0 278

04/14/2017

****WARNING**** READ AND FOLLOW ALL NOTES ON THIS DRAWING!
****IMPORTANT**** FURNISH THIS DRAWING TO ALL CONTRACTORS INCLUDING THE INSTALLERS

Trusses require extreme care in fabricating, handling, shipping, installing and bracing. Refer to and follow the latest edition of BCSI (Building Component Safety Information, by TPI and SBCA) for safety practices prior to performing these functions. Installers shall provide temporary bracing per BCSI. Unless noted otherwise,top chord shall have properly attached structural sheathing and bottom chord shall have a properly attached rigid ceiling. Locations shown for permanent lateral restraint of webs shall have bracing installed per BCSI sections B3, B7, or B10, as applicable. Apply plates to each face of truss and position as shown above and on the Joint Details, unless noted otherwise. Refer to drawings 160A-Z for standard plate positions.

Alpine, a division of ITW Building Components Group Inc. shall not be responsible for any deviation from this drawing,any failure to build the truss in conformance with ANSI/TPI 1, or for handling, shipping, installation and bracing of trusses**A seal on this drawing or cover page listing this drawing, indicates acceptance of professional engineering responsibility solely for the design shown. The suitability and use of this drawing for any structure is the responsibility of the Building Designer per ANSI/TPI 1 Sec.2.**

For more information see this job's general notes page and these web sites: ALPINE: www.alpineitw.com; TPI: www.tpinst.org; SBCA: www.sbcindustry.com; ICC: www.iccsafe.org

ALPINE™ AN ITW COMPANY
2400 Lake Orange Dr.
Suite 150
Orlando FL, 32837

Job Number: 16-0982 HUBBART RESIDENCE **Truss Label:** B03	Ply: 1 Qty: 1	SEQN: 455367 / T64 COMN FROM: CDM	Cust: R215 JRef: 1VZZ2150001 DrwNo: 104.17.1303.19257 KM / DF 04/14/2017

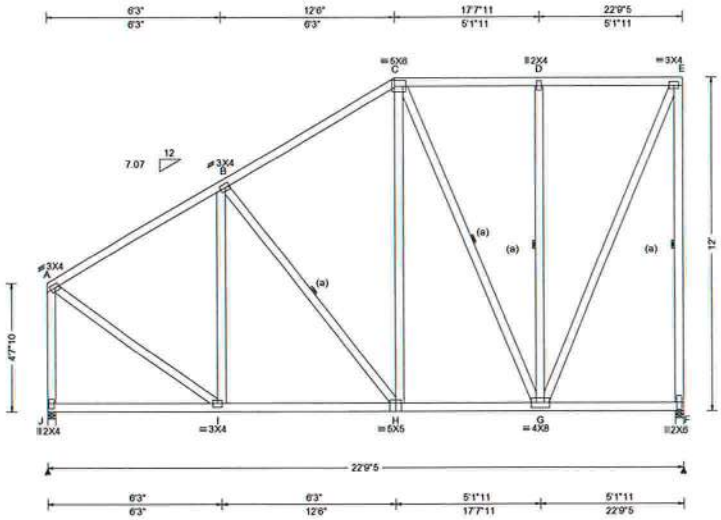

Loading Criteria (psf)

TCLL:	20.00
TCDL:	10.00
BCLL:	0.00
BCDL:	10.00
Des Ld:	40.00
NCBCLL:	10.00
Soffit:	2.00

Load Duration: 1.25
Spacing: 24.0 "

Wind Criteria
Wind Std: ASCE 7-10
Speed: 130 mph
Enclosure: Closed
Risk Category: II
EXP: C
Mean Height: 18.32 ft
TCDL: 5.0 psf
BCDL: 5.0 psf
MWFRS Parallel Dist: h to 2h
C&C Dist a: 3.00 ft
Loc. from endwall: not in 9.00 ft
GCpi: 0.18
Wind Duration: 1.60

Snow Criteria (Pg,Pf in PSF)
Pg: NA Ct: NA CAT: NA
Pf: NA Ce: NA
Lu: NA Cs: NA
Snow Duration: NA

Code / Misc Criteria
Bldg Code: FBC 2014 RES
TPI Std: 2007
Rep Factors Used: Yes
FT/RT:20(0)/10(0)
Plate Type(s):
WAVE

Defl/CSI Criteria

PP Deflection in	loc	L/defl	L/#
VERT(LL): 0.017	H	999	240
VERT(TL): 0.044	H	999	180
HORZ(LL): 0.007	B	-	-
HORZ(TL): 0.019	B	-	-

Creep Factor: 1.5
Max TC CSI: 0.267
Max BC CSI: 0.201
Max Web CSI: 0.522

VIEW Ver: 16.01.00D.0413.17

▲ Maximum Reactions (lbs)

Loc	R	/ U	/ Rw	/ Rh	/ RL	/ W
J	948	/ 42	/ 595	/ -	/ 146	/ 3.5
F	948	/ 228	/ 541	/ -	/ -	/ 3.4

Wind reactions based on MWFRS
J Min Brg Width Req = 1.5
F Min Brg Width Req = 1.5
Bearings J & F are a rigid surface.

Members not listed have forces less than 375#

Maximum Top Chord Forces Per Ply (lbs)

Chords	Tens.	Comp.	Chords	Tens.	Comp.
A - B	139	-745	B - C	185	-659

Maximum Bot Chord Forces Per Ply (lbs)

Chords	Tens.	Comp.	Chords	Tens.	Comp.
I - H	580	-292	H - G	472	-198

Maximum Web Forces Per Ply (lbs)

Webs	Tens.	Comp.	Webs	Tens.	Comp.
A - J	154	-900	G - E	847	-319
A - I	702	-59	E - F	360	-906

Lumber
Top chord 2x4 SP M-31
Bot chord 2x4 SP M-31
Webs 2x4 SP M-31

Bracing
(a) Continuous lateral restraint equally spaced on member.

Purlins
In lieu of structural panels use purlins to brace all flat TC @ 24" oc.

Wind
Wind loads based on MWFRS with additional C&C member design.
End verticals not exposed to wind pressure.

DOUGLAS FLEMING
LICENSE
No. 66648
STATE OF
FLORIDA
PROFESSIONAL ENGINEER

#0 278

04/14/2017

****WARNING**** READ AND FOLLOW ALL NOTES ON THIS DRAWING!
****IMPORTANT**** FURNISH THIS DRAWING TO ALL CONTRACTORS INCLUDING THE INSTALLERS

Trusses require extreme care in fabricating, handling, shipping, installing and bracing. Refer to and follow the latest edition of BCSI (Building Component Safety Information, by TPI and SBCA) for safety practices prior to performing these functions. Installers shall provide temporary bracing per BCSI. Unless noted otherwise,top chord shall have properly attached structural sheathing and bottom chord shall have a properly attached rigid ceiling. Locations shown for permanent lateral restraint of webs shall have bracing installed per BCSI sections B3, B7, or B10, as applicable. Apply plates to each face of truss and position as shown above and on the Joint Details, unless noted otherwise. Refer to drawings 160A-Z for standard plate positions.

Alpine, a division of ITW Building Components Group Inc. shall not be responsible for any deviation from this drawing,any failure to build the truss in conformance with ANSI/TPI 1, or for handling, shipping, installation and bracing of trusses**A seal on this drawing or cover page listing this drawing, indicates acceptance of professional engineering responsibility solely for the design shown. The suitability and use of this drawing for any structure is the responsibility of the Building Designer per ANSI/TPI 1 Sec.2.**

For more information see this job's general notes page and these web sites: ALPINE: www.alpineitw.com; TPI: www.tpinst.org; SBCA: www.sbcindustry.com; ICC: www.iccsafe.org

ALPINE™ AN ITW COMPANY
2400 Lake Orange Dr.
Suite 150
Orlando FL, 32837

Job Number: 16-0982 HUBBART RESIDENCE **Truss Label:** B04	Ply: 1 Qty: 1	SEQN: 455365 / T67 COMN FROM: CDM	Cust: R215 JRef: 1VZZ2150001 DrwNo: 104.17.1303.30213 KM / DF 04/14/2017

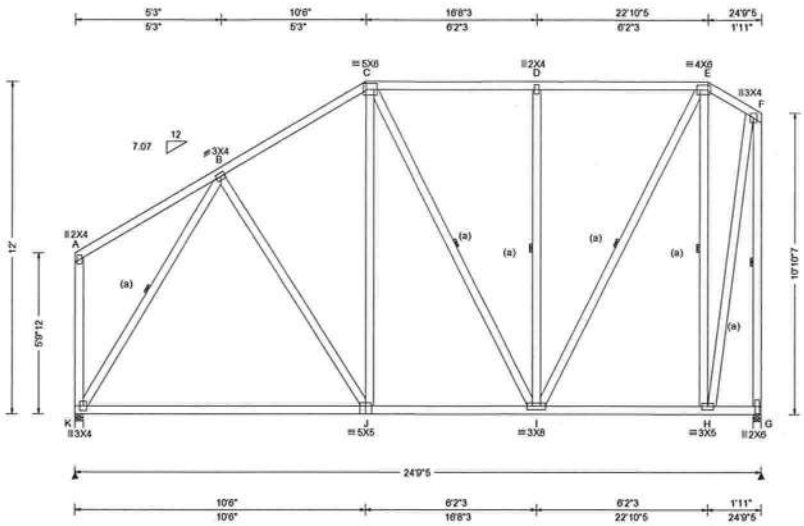

Loading Criteria (psf)

TCLL:	20.00
TCDL:	10.00
BCLL:	0.00
BCDL:	10.00
Des Ld:	40.00
NCBCLL:	10.00
Soffit:	2.00

Load Duration: 1.25
Spacing: 24.0 "

Wind Criteria
Wind Std: ASCE 7-10
Speed: 130 mph
Enclosure: Closed
Risk Category: II
EXP: C
Mean Height: 18.91 ft
TCDL: 5.0 psf
BCDL: 5.0 psf
MWFRS Parallel Dist: h to 2h
C&C Dist a: 3.00 ft
Loc. from endwall: not in 9.00 ft
GCpi: 0.18
Wind Duration: 1.60

Snow Criteria (Pg,Pf in PSF)
Pg: NA Ct: NA CAT: NA
Pf: NA Ce: NA
Lu: NA Cs: NA
Snow Duration: NA

Code / Misc Criteria
Bldg Code: FBC 2014 RES
TPI Std: 2007
Rep Factors Used: Yes
FT/RT:20(0)/10(0)
Plate Type(s):
WAVE

Defl/CSI Criteria

PP Deflection in	loc	L/defl	L/#
VERT(LL): 0.023	D	999	240
VERT(TL): 0.061	D	999	180
HORZ(LL): 0.014	F	-	-
HORZ(TL): 0.040	F	-	-

Creep Factor: 1.5
Max TC CSI: 0.180
Max BC CSI: 0.380
Max Web CSI: 0.377

VIEW Ver: 16.01.00D.0413.17

▲ Maximum Reactions (lbs)

Loc	R	/ U	/ Rw	/ Rh	/ RL	/ W
K	1037	/ 83	/ 620	/ -	/ 131	/ 3.5
G	1025	/ 205	/ 547	/ -	/ -	/ 3.4

Wind reactions based on MWFRS
K Min Brg Width Req = 1.5
G Min Brg Width Req = 1.5
Bearings K & G are a rigid surface.

Members not listed have forces less than 375#

Maximum Top Chord Forces Per Ply (lbs)

Chords	Tens.	Comp.	Chords	Tens.	Comp.
B - C	248	-729	D - E	217	-500
C - D	217	-500			

Maximum Bot Chord Forces Per Ply (lbs)

Chords	Tens.	Comp.	Chords	Tens.	Comp.
K - J	972	-342	J - I	550	-207

Maximum Web Forces Per Ply (lbs)

Webs	Tens.	Comp.	Webs	Tens.	Comp.
K - B	171	-938	E - H	325	-818
D - I	177	-426	H - F	934	-308
I - E	712	-257	F - G	344	-1026

Lumber

Top chord 2x4 SP M-31
Bot chord 2x4 SP M-31
Webs 2x4 SP M-31

Bracing

(a) Continuous lateral restraint equally spaced on member.

Purlins

In lieu of structural panels use purlins to brace all flat TC @ 24" oc.

Wind

Wind loads based on MWFRS with additional C&C member design.

End verticals not exposed to wind pressure.

DOUGLAS FLEMING
LICENSE
No. 66648
STATE OF
FLORIDA
PROFESSIONAL ENGINEER

#0 278

04/14/2017

****WARNING**** READ AND FOLLOW ALL NOTES ON THIS DRAWING!
****IMPORTANT**** FURNISH THIS DRAWING TO ALL CONTRACTORS INCLUDING THE INSTALLERS

Trusses require extreme care in fabricating, handling, shipping, installing and bracing. Refer to and follow the latest edition of BCSI (Building Component Safety Information, by TPI and SBCA) for safety practices prior to performing these functions. Installers shall provide temporary bracing per BCSI. Unless noted otherwise,top chord shall have properly attached structural sheathing and bottom chord shall have a properly attached rigid ceiling. Locations shown for permanent lateral restraint of webs shall have bracing installed per BCSI sections B3, B7, or B10, as applicable. Apply plates to each face of truss and position as shown above and on the Joint Details, unless noted otherwise. Refer to drawings 160A-Z for standard plate positions.

Alpine, a division of ITW Building Components Group Inc. shall not be responsible for any deviation from this drawing,any failure to build the truss in conformance with ANSI/TPI 1, or for handling, shipping, installation and bracing of trusses**A seal on this drawing or cover page listing this drawing, indicates acceptance of professional engineering responsibility solely for the design shown. The suitability and use of this drawing for any structure is the responsibility of the Building Designer per ANSI/TPI 1 Sec.2.**

For more information see this job's general notes page and these web sites: ALPINE: www.alpineitw.com; TPI: www.tpinst.org; SBCA: www.sbcindustry.com; ICC: www.iccsafe.org

ALPINE
AN ITW COMPANY
2400 Lake Orange Dr.
Suite 150
Orlando FL, 32837

Job Number: 16-0982 HUBBART RESIDENCE **Truss Label:** B05	Ply: 1 Qty: 1	SEQN: 455363 / T68 COMN FROM: CDM	Cust: R215 JRef: 1VZZ2150001 DrwNo: 104.17.1303.31377 KM / DF 04/14/2017

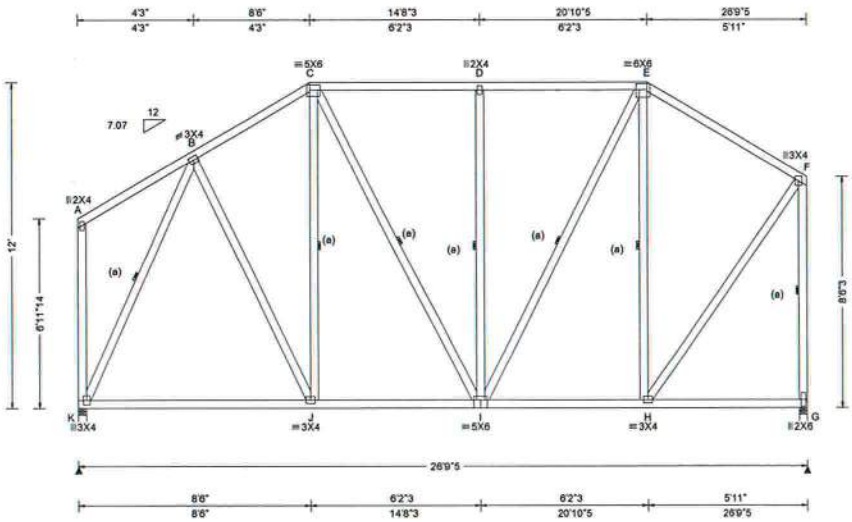

Loading Criteria (psf)
TCLL: 20.00
TCDL: 10.00
BCLL: 0.00
BCDL: 10.00
Des Ld: 40.00
NCBCLL: 10.00
Soffit: 2.00
Load Duration: 1.25
Spacing: 24.0 "

Wind Criteria
Wind Std: ASCE 7-10
Speed: 130 mph
Enclosure: Closed
Risk Category: II
EXP: C
Mean Height: 19.50 ft
TCDL: 5.0 psf
BCDL: 5.0 psf
MWFRS Parallel Dist: h to 2h
C&C Dist a: 3.00 ft
Loc. from endwall: not in 9.00 ft
GCpi: 0.18
Wind Duration: 1.60

Snow Criteria (Pg,Pf in PSF)
Pg: NA Ct: NA CAT: NA
Pf: NA Ce: NA
Lu: NA Cs: NA
Snow Duration: NA

Code / Misc Criteria
Bldg Code: FBC 2014 RES
TPI Std: 2007
Rep Factors Used: Yes
FT/RT:20(0)/10(0)
Plate Type(s):
WAVE

Defl/CSI Criteria

PP Deflection in	loc	L/defl	L/#
VERT(LL): 0.022	D	999	240
VERT(TL): 0.057	D	999	180
HORZ(LL): 0.007	C	-	-
HORZ(TL): 0.019	C	-	-

Creep Factor: 1.5
Max TC CSI: 0.199
Max BC CSI: 0.263
Max Web CSI: 0.272

VIEW Ver: 16.01.00D.0413.17

▲ Maximum Reactions (lbs)

Loc	R	/ U	/ Rw	/ Rh	/ RL	/ W
K	1120	/ 113	/ 624	/ -	/ 124	/ 3.5
G	1108	/ 128	/ 574	/ -	/ -	/ 3.4

Wind reactions based on MWFRS
K Min Brg Width Req = 1.5
G Min Brg Width Req = 1.5
Bearings K & G are a rigid surface.

Members not listed have forces less than 375#

Maximum Top Chord Forces Per Ply (lbs)

Chords	Tens.	Comp.	Chords	Tens.	Comp.
B - C	287	- 719	D - E	301	- 647
C - D	301	- 647	E - F	221	- 612

Maximum Bot Chord Forces Per Ply (lbs)

Chords	Tens.	Comp.	Chords	Tens.	Comp.
K - J	841	- 257	I - H	460	- 120
J - I	561	- 155			

Maximum Web Forces Per Ply (lbs)

Webs	Tens.	Comp.	Webs	Tens.	Comp.
K - B	251	- 1011	E - H	187	- 499
I - D	164	- 403	H - F	786	- 205
I - E	400	- 128	F - G	330	- 1062

Lumber

Top chord 2x4 SP M-31
Bot chord 2x4 SP M-31
Webs 2x4 SP M-31

Bracing

(a) Continuous lateral restraint equally spaced on member.

Purlins

In lieu of structural panels use purlins to brace all flat TC @ 24" oc.

Wind

Wind loads based on MWFRS with additional C&C member design.

End verticals not exposed to wind pressure.

DOUGLAS FLEMING
LICENSE
No. 66648
STATE OF
FLORIDA
PROFESSIONAL ENGINEER

#0 278

04/14/2017

****WARNING**** READ AND FOLLOW ALL NOTES ON THIS DRAWING!
****IMPORTANT**** FURNISH THIS DRAWING TO ALL CONTRACTORS INCLUDING THE INSTALLERS

Trusses require extreme care in fabricating, handling, shipping, installing and bracing. Refer to and follow the latest edition of BCSI (Building Component Safety Information, by TPI and SBCA) for safety practices prior to performing these functions. Installers shall provide temporary bracing per BCSI. Unless noted otherwise,top chord shall have properly attached structural sheathing and bottom chord shall have a properly attached rigid ceiling. Locations shown for permanent lateral restraint of webs shall have bracing installed per BCSI sections B3, B7, or B10, as applicable. Apply plates to each face of truss and position as shown above and on the Joint Details, unless noted otherwise. Refer to drawings 160A-Z for standard plate positions.

Alpine, a division of ITW Building Components Group Inc. shall not be responsible for any deviation from this drawing,any failure to build the truss in conformance with ANSI/TPI 1, or for handling, shipping, installation and bracing of trusses**A seal on this drawing or cover page listing this drawing, indicates acceptance of professional engineering responsibility solely for the design shown. The suitability and use of this drawing for any structure is the responsibility of the Building Designer per ANSI/TPI 1 Sec.2.**

For more information see this job's general notes page and these web sites: ALPINE: www.alpineitw.com; TPI: www.tpinst.org; SBCA: www.sbcindustry.com; ICC: www.iccsafe.org

ALPINE
AN ITW COMPANY
2400 Lake Orange Dr.
Suite 150
Orlando FL, 32837

Job Number: 16-0982	Ply: 1	SEQN: 455350 / T40 COMN	Cust: R215 JRef: 1VZZ2150001
HUBBART RESIDENCE	Qty: 1	FROM: CDM	DrwNo: 104.17.1303.44063
Truss Label: B06			KM / DF 04/14/2017

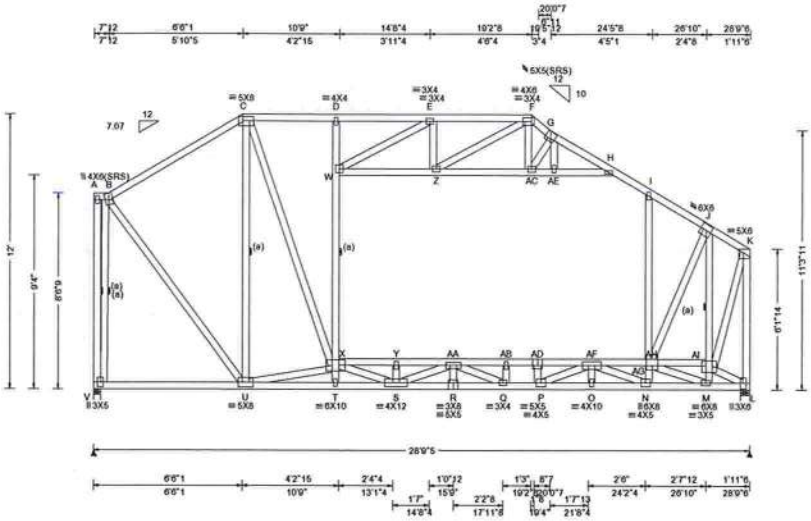

Loading Criteria (psf)		**Wind Criteria**	**Snow Criteria** (Pg,Pf in PSF)	**Defl/CSI Criteria**				
TCLL:	20.00	Wind Std: ASCE 7-10	Pg: NA Ct: NA CAT: NA	PP Deflection in	loc	L/defl	L/#	
TCDL:	10.00	Speed: 130 mph	Pf: NA Ce: NA	VERT(LL): 0.108	R	999	480	
BCLL:	0.00	Enclosure: Closed	Lu: NA Cs: NA	VERT(TL): 0.280	R	999	360	
BCDL:	10.00	Risk Category: II	Snow Duration: NA	HORZ(LL): 0.047	R	-	-	
Des Ld:	40.00	EXP: C		HORZ(TL): 0.143	R	-	-	
NCBCLL:	10.00	Mean Height: 16.67 ft	**Code / Misc Criteria**	Creep Factor: 1.5				
Soffit:	2.00	TCDL: 5.0 psf	Bldg Code: FBC 2014 RES	Max TC CSI: 0.313				
Load Duration: 1.25		BCDL: 5.0 psf	TPI Std: 2007	Max BC CSI: 0.381				
Spacing: 24.0 "		MWFRS Parallel Dist: h to 2h	Rep Factors Used: Yes	Max Web CSI: 0.877				
		C&C Dist a: 3.00 ft	FT/RT:20(0)/10(0)					
		Loc. from endwall: not in 9.00 ft	Plate Type(s):					
		GCpi: 0.18	WAVE	VIEW Ver: 16.01.00D.0413.17				
		Wind Duration: 1.60						

▲ Maximum Reactions (lbs)

Loc	R	/ U	/ Rw	/ Rh	/ RL	/ W
V	2012	/ 124	/ 616	/ -	/ 136	/ 3.5
L	2391	/ 97	/ 674	/ -	/ -	/ 4.9

Wind reactions based on MWFRS
V Min Brg Width Req = 1.7
L Min Brg Width Req = 2.0
Bearings V & L are a rigid surface.

Members not listed have forces less than 375#

Maximum Top Chord Forces Per Ply (lbs)

Chords	Tens.	Comp.	Chords	Tens.	Comp.
B - C	241	-1212	G - H	362	-1410
C - D	303	-1474	H - I	294	-1750
D - E	296	-1476	I - J	193	-1736
E - F	403	-1593	J - K	103	-896
F - G	389	-1334			

Maximum Bot Chord Forces Per Ply (lbs)

Chords	Tens.	Comp.	Chords	Tens.	Comp.
U - T	681	-292	Q - P	2360	-77
T - S	697	-305	P - O	1206	-315
S - R	2589	-31	O - N	1206	-315
R - Q	2589	-31	N - M	345	-1374

Maximum Web Forces Per Ply (lbs)

Webs	Tens.	Comp.	Webs	Tens.	Comp.
V - B	430	-2013	AC-AE	62	-553
B - U	1379	-167	AD- P	32	-439
C - U	170	-1153	AD-AF	207	-972
C - X	1536	-156	P -AF	1568	-115
U - X	715	-244	AE- H	61	-553
W - X	187	-375	AF- N	53	-1854
X - S	1835	-175	AF-AG	2392	-322
X - Y	101	-798	N -AG	1066	-20
S -AA	151	-726	AG- J	1948	-126
Y -AA	101	-791	AG-AI	953	-123
Z - F	623	-98	AH- M	1147	-213
Z -AC	25	-591	M -AI	96	-450
AA- Q	142	-473	J -AI	180	-2339
AA-AB	191	-1018	AI- K	2054	-179
AB-AD	199	-1021	K - L	238	-2415

Lumber

Top chord 2x4 SP M-31
Bot chord 2x4 SP M-31
Webs 2x4 SP M-31

Bracing

(a) Continuous lateral restraint equally spaced on member.

Plating Notes

All plates are 2X4 except as noted.

Loading

Attic room loading from 10-9-0 to 24-2-0: Live Load: 40 PSF. Dead Load: 10 PSF Ceiling: 10 PSF, Kneewalls: 10 PSF

Purlins

In lieu of structural panels use purlins to brace all flat TC @ 24" oc.

Collar-tie braced with continuous lateral bracing at 24" oc. or rigid ceiling.

Wind

Wind loads based on MWFRS with additional C&C member design.

End verticals not exposed to wind pressure.

Deflection

Max JT VERT DEFL: LL: 0.11" DL: 0.19". See detail DEFLCAMB1014 for camber recommendations. Provide for adequate drainage of roof.

#0 278

04/14/2017

****WARNING**** READ AND FOLLOW ALL NOTES ON THIS DRAWING!
****IMPORTANT**** FURNISH THIS DRAWING TO ALL CONTRACTORS INCLUDING THE INSTALLERS

Trusses require extreme care in fabricating, handling, shipping, installing and bracing. Refer to and follow the latest edition of BCSI (Building Component Safety Information, by TPI and SBCA) for safety practices prior to performing these functions. Installers shall provide temporary bracing per BCSI. Unless noted otherwise,top chord shall have properly attached structural sheathing and bottom chord shall have a properly attached rigid ceiling. Locations shown for permanent lateral restraint of webs shall have bracing installed per BCSI sections B3, B7, or B10, as applicable. Apply plates to each face of truss and position as shown above and on the Joint Details, unless noted otherwise. Refer to drawings 160A-Z for standard plate positions.

Alpine, a division of ITW Building Components Group Inc. shall not be responsible for any deviation from this drawing,any failure to build the truss in conformance with ANSI/TPI 1, or for handling, shipping, installation and bracing of trusses**A seal on this drawing or cover page listing this drawing, indicates acceptance of professional engineering responsibility solely for the design shown. The suitability and use of this drawing for any structure is the responsibility of the Building Designer per ANSI/TPI 1 Sec.2.**

For more information see this job's general notes page and these web sites: ALPINE: www.alpineitw.com; TPI: www.tpinst.org; SBCA: www.sbcindustry.com; ICC: www.iccsafe.org

ALPINE
AN ITW COMPANY
2400 Lake Orange Dr.
Suite 150
Orlando FL, 32837

Job Number: 16-0982 HUBBART RESIDENCE **Truss Label:** B07	Ply: 1 Qty: 1	SEQN: 455335 / T53 COMN FROM: CDM	Cust: R215 JRef: 1VZZ2150001 DrwNo: 104.17.1303.45850 KM / DF 04/14/2017

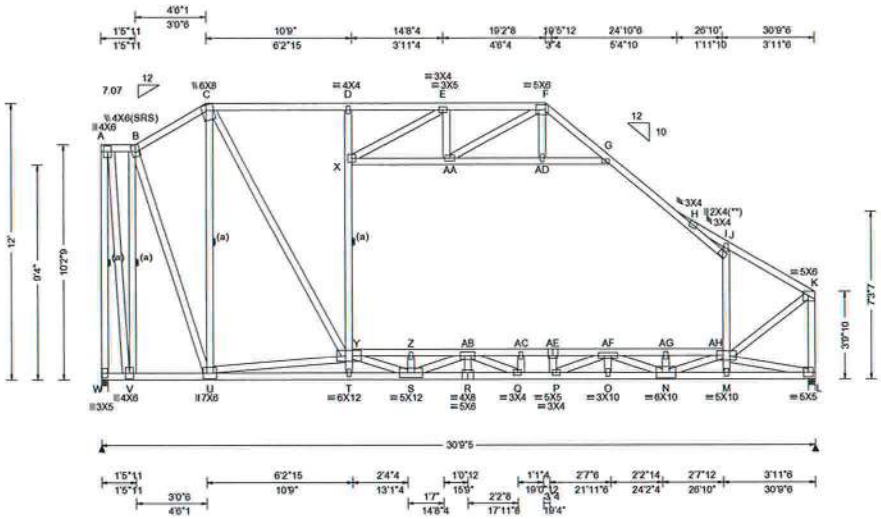

Loading Criteria (psf)

TCLL: 20.00
TCDL: 10.00
BCLL: 0.00
BCDL: 10.00
Des Ld: 40.00
NCBCLL: 10.00
Soffit: 2.00
Load Duration: 1.25
Spacing: 24.0 "

Wind Criteria

Wind Std: ASCE 7-10
Speed: 130 mph
Enclosure: Closed
Risk Category: II
EXP: C
Mean Height: 16.67 ft
TCDL: 5.0 psf
BCDL: 5.0 psf
MWFRS Parallel Dist: h to 2h
C&C Dist a: 3.08 ft
Loc. from endwall: not in 9.00 ft
GCpi: 0.18
Wind Duration: 1.60

Snow Criteria (Pg,Pf in PSF)

Pg: NA Ct: NA CAT: NA
Pf: NA Ce: NA
Lu: NA Cs: NA
Snow Duration: NA

Code / Misc Criteria

Bldg Code: FBC 2014 RES
TPI Std: 2007
Rep Factors Used: Yes
FT/RT:20(0)/10(0)
Plate Type(s):
WAVE

Defl/CSI Criteria

PP Deflection in	loc	L/defl	L/#
VERT(LL): 0.267	F	999	480
VERT(TL): 0.714	Q	516	360
HORZ(LL): 0.188	R	-	-
HORZ(TL): 0.552	R	-	-

Creep Factor: 1.5
Max TC CSI: 0.751
Max BC CSI: 0.531
Max Web CSI: 0.584

VIEW Ver: 16.01.00D.0413.17

▲ Maximum Reactions (lbs)

Loc	R	/ U	/ Rw	/ Rh	/ RL	/ W
W	2157	/ 195	/ 680	/ -	/ 162	/ 3.5
L	2627	/ 85	/ 770	/ -	/ -	/ 3.5

Wind reactions based on MWFRS
W Min Brg Width Req = 1.8
L Min Brg Width Req = 2.2
Bearings W & L are a rigid surface.

Members not listed have forces less than 375#

Maximum Top Chord Forces Per Ply (lbs)

Chords	Tens.	Comp.	Chords	Tens.	Comp.
B - C	192	-937	G - H	337	-2097
C - D	343	-1733	H - I	597	-402
D - E	306	-1777	H - J	163	-2218
E - F	355	-1559	J - K	108	-2057
F - G	290	-1087			

Maximum Bot Chord Forces Per Ply (lbs)

Chords	Tens.	Comp.	Chords	Tens.	Comp.
U - T	556	-897	P - O	4146	-177
T - S	646	-932	O - N	4146	-177
S - R	3727	-87	N - M	1566	-618
R - Q	3727	-87	M - L	1557	-654
Q - P	4367	0			

Maximum Web Forces Per Ply (lbs)

Webs	Tens.	Comp.	Webs	Tens.	Comp.
A - W	384	-2069	AB- Q	1009	-185
A - V	2010	-366	AB-AC	0	-2912
V - B	388	-2064	AC-AE	0	-2948
B - U	1622	-253	AD- G	95	-1085
C - U	300	-1602	AE-AF	0	-2931
C - Y	1980	-313	P -AF	491	-175
U - Y	1566	-324	AF- N	119	-1185
X - E	393	-7	AF-AG	333	-1742
Y - S	2914	-192	N -AH	2300	-163
Y - Z	339	-1144	AG-AH	334	-1752
S -AB	112	-1586	I -AH	348	-510
Z -AB	338	-1136	AH- K	2085	-80
E -AA	53	-414	AH- L	671	-1592
AA-AD	94	-1075	K - L	108	-2305
AA- F	1032	-99			

Lumber

Top chord 2x4 SP M-31
Bot chord 2x4 SP M-31
Webs 2x4 SP M-31

Bracing

(a) Continuous lateral restraint equally spaced on member.

Plating Notes

All plates are 2X4 except as noted.

(**) 1 plate(s) require special positioning. Refer to scaled plate plot details for special positioning requirements.

Loading

Attic room loading from 10-9-0 to 26-10-0: Live Load: 40 PSF. Dead Load: 10 PSF Ceiling: 10 PSF, Kneewalls: 10 PSF

Purlins

In lieu of structural panels use purlins to brace all flat TC @ 24" oc.

Collar-tie braced with continuous lateral bracing at 24" oc. or rigid ceiling.

Wind

Wind loads based on MWFRS with additional C&C member design.

End verticals not exposed to wind pressure.

Deflection

Max JT VERT DEFL: LL: 0.27" DL: 0.49". See detail DEFLCAMB1014 for camber recommendations. Provide for adequate drainage of roof.

DOUGLAS FLEMING LICENSE No. 66648 STATE OF FLORIDA PROFESSIONAL ENGINEER

#0 278

04/14/2017

****WARNING**** READ AND FOLLOW ALL NOTES ON THIS DRAWING!
****IMPORTANT**** FURNISH THIS DRAWING TO ALL CONTRACTORS INCLUDING THE INSTALLERS

Trusses require extreme care in fabricating, handling, shipping, installing and bracing. Refer to and follow the latest edition of BCSI (Building Component Safety Information, by TPI and SBCA) for safety practices prior to performing these functions. Installers shall provide temporary bracing per BCSI. Unless noted otherwise,top chord shall have properly attached structural sheathing and bottom chord shall have a properly attached rigid ceiling. Locations shown for permanent lateral restraint of webs shall have bracing installed per BCSI sections B3, B7, or B10, as applicable. Apply plates to each face of truss and position as shown above and on the Joint Details, unless noted otherwise. Refer to drawings 160A-Z for standard plate positions.

Alpine, a division of ITW Building Components Group Inc. shall not be responsible for any deviation from this drawing,any failure to build the truss in conformance with ANSI/TPI 1, or for handling, shipping, installation and bracing of trusses**A seal on this drawing or cover page listing this drawing, indicates acceptance of professional engineering responsibility solely for the design shown. The suitability and use of this drawing for any structure is the responsibility of the Building Designer per ANSI/TPI 1 Sec.2.**

For more information see this job's general notes page and these web sites: ALPINE: www.alpineitw.com; TPI: www.tpinst.org; SBCA: www.sbcindustry.com; ICC: www.iccsafe.org

ALPINE AN ITW COMPANY
2400 Lake Orange Dr.
Suite 150
Orlando FL, 32837

Job Number: 16-0982 HUBBART RESIDENCE **Truss Label:** B08	Ply: 1 Qty: 1	SEQN: 467838 / T56 COMN FROM: CDM	Cust: R215 JRef: 1VZZ2150001 DrwNo: 104.17.1303.47937 KM / DF 04/14/2017

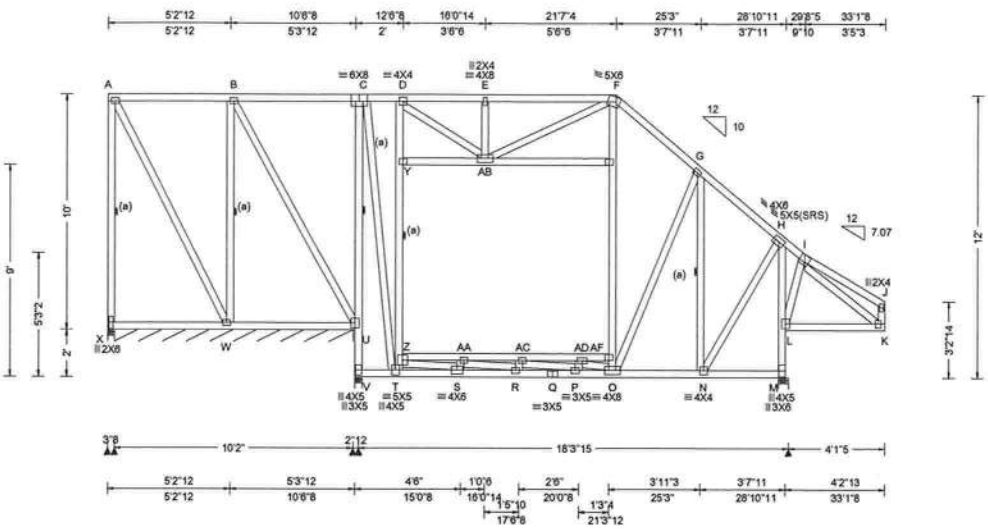

Loading Criteria (psf)

TCLL: 20.00
TCDL: 10.00
BCLL: 0.00
BCDL: 10.00
Des Ld: 40.00
NCBCLL: 10.00
Soffit: 2.00
Load Duration: 1.25
Spacing: 24.0 "

Wind Criteria

Wind Std: ASCE 7-10
Speed: 130 mph
Enclosure: Closed
Risk Category: II
EXP: C
Mean Height: 15.00 ft
TCDL: 5.0 psf
BCDL: 5.0 psf
MWFRS Parallel Dist: > 2h
C&C Dist a: 3.31 ft
Loc. from endwall: not in 9.00 ft
GCpi: 0.18
Wind Duration: 1.60

Snow Criteria (Pg,Pf in PSF)

Pg: NA Ct: NA CAT: NA
Pf: NA Ce: NA
Lu: NA Cs: NA
Snow Duration: NA

Code / Misc Criteria

Bldg Code: FBC 2014 RES
TPI Std: 2007
Rep Factors Used: Yes
FT/RT:20(0)/10(0)
Plate Type(s):
WAVE

Defl/CSI Criteria

PP Deflection in	loc	L/defl	L/#
VERT(LL): 0.165	F	999	240
VERT(TL): 0.454	O	477	180
HORZ(LL): 0.232	E	-	-
HORZ(TL): 0.646	E	-	-

Creep Factor: 1.5
Max TC CSI: 0.216
Max BC CSI: 0.346
Max Web CSI: 0.656

VIEW Ver: 16.02.01B.0131.17

▲ Maximum Reactions (lbs), or *=PLF

Loc	R	/ U	/ Rw	/ Rh	/ RL	/ W
X	481	/ 159	/ 231	/ -	/ 165	/ 3.5
X*	70	/ 10	/ 46	/ -	/ -	/ 122
V	1178	/ 54	/ 316	/ -	/ -	/ 3.5
M	1800	/ 46	/ 924	/ -	/ -	/ 4.9

Wind reactions based on MWFRS
X Min Brg Width Req = 1.5
X Min Brg Width Req = -
V Min Brg Width Req = 1.5
M Min Brg Width Req = 1.5
Bearings X, X, V, & M are a rigid surface.

Members not listed have forces less than 375#

Maximum Top Chord Forces Per Ply (lbs)

Chords	Tens.	Comp.	Chords	Tens.	Comp.
C - D	287	-470	F - G	314	-918
D - E	380	-828	G - H	215	-685
E - F	380	-829			

Maximum Bot Chord Forces Per Ply (lbs)

Chords	Tens.	Comp.	Chords	Tens.	Comp.
S - R	1631	0	P - O	1874	0
R - Q	2290	0	O - N	486	-15
Q - P	2290	0			

Maximum Web Forces Per Ply (lbs)

Webs	Tens.	Comp.	Webs	Tens.	Comp.
A - X	313	-444	AA- R	637	0
W - B	396	-594	AA-AC	0	-1670
U - V	53	-1290	AC- P	19	-450
U - C	173	-1714	AC-AD	0	-1422
C - T	1695	-75	AD- O	0	-961
T - Z	92	-1201	AD-AF	0	-471
Y - Z	99	-729	O - G	416	-48
Y - D	98	-702	G - N	100	-775
Z - S	1627	0	N - H	1082	-103
Z -AA	4	-1015	H - L	351	-1674
D -AB	577	-121	L - M	424	-1797
S -AA	0	-486			

Lumber

Top chord 2x4 SP M-31
Bot chord 2x4 SP M-31
Webs 2x4 SP M-31

Bracing

(a) Continuous lateral restraint equally spaced on member.

Plating Notes

All plates are 3X4 except as noted.

Loading

Attic room loading from 12-6-8 to 21-3-12: Live Load: 40 PSF. Dead Load: 10 PSF Ceiling: 10 PSF, Kneewalls: 10 PSF

Purlins

In lieu of structural panels use purlins to brace all flat TC @ 24" oc.

Collar-tie braced with continuous lateral bracing at 24" oc. or rigid ceiling.

Wind

Wind loads based on MWFRS with additional C&C member design.

Left end vertical not exposed to wind pressure.

Right cantilever is exposed to wind

DOUGLAS FLEMING
LICENSE
No. 66648
STATE OF
FLORIDA
PROFESSIONAL ENGINEER

#0 278

04/14/2017

****WARNING**** READ AND FOLLOW ALL NOTES ON THIS DRAWING!
****IMPORTANT**** FURNISH THIS DRAWING TO ALL CONTRACTORS INCLUDING THE INSTALLERS

Trusses require extreme care in fabricating, handling, shipping, installing and bracing. Refer to and follow the latest edition of BCSI (Building Component Safety Information, by TPI and SBCA) for safety practices prior to performing these functions. Installers shall provide temporary bracing per BCSI. Unless noted otherwise,top chord shall have properly attached structural sheathing and bottom chord shall have a properly attached rigid ceiling. Locations shown for permanent lateral restraint of webs shall have bracing installed per BCSI sections B3, B7, or B10, as applicable. Apply plates to each face of truss and position as shown above and on the Joint Details, unless noted otherwise. Refer to drawings 160A-Z for standard plate positions.

Alpine, a division of ITW Building Components Group Inc. shall not be responsible for any deviation from this drawing,any failure to build the truss in conformance with ANSI/TPI 1, or for handling, shipping, installation and bracing of trusses**A seal on this drawing or cover page listing this drawing, indicates acceptance of professional engineering responsibility solely for the design shown. The suitability and use of this drawing for any structure is the responsibility of the Building Designer per ANSI/TPI 1 Sec.2.**

For more information see this job's general notes page and these web sites: ALPINE: www.alpineitw.com; TPI: www.tpinst.org; SBCA: www.sbcindustry.com; ICC: www.iccsafe.org

ALPINE AN ITW COMPANY
2400 Lake Orange Dr.
Suite 150
Orlando FL, 32837

Job Number: 16-0982 HUBBART RESIDENCE **Truss Label:** B09	Ply: 1 Qty: 1	SEQN: 467669 / T52 COMN FROM: CDM	Cust: R215 JRef: 1VZZ2150001 DrwNo: 104.17.1303.50207 KM / DF 04/14/2017

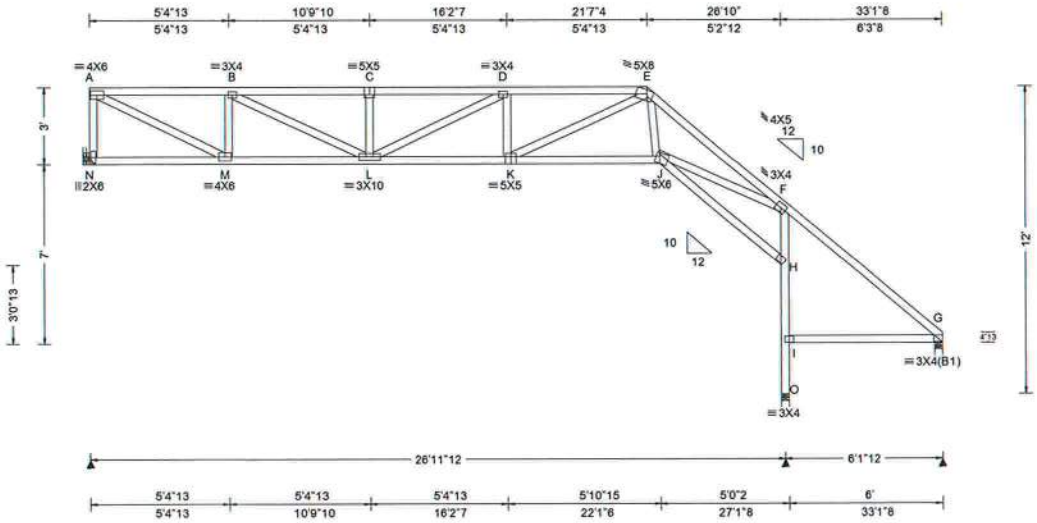

Loading Criteria (psf)
TCLL: 20.00
TCDL: 10.00
BCLL: 0.00
BCDL: 10.00
Des Ld: 40.00
NCBCLL: 10.00
Soffit: 2.00
Load Duration: 1.25
Spacing: 24.0 "

Wind Criteria
Wind Std: ASCE 7-10
Speed: 130 mph
Enclosure: Closed
Risk Category: II
EXP: C
Mean Height: 15.20 ft
TCDL: 5.0 psf
BCDL: 5.0 psf
MWFRS Parallel Dist: h to 2h
C&C Dist a: 3.31 ft
Loc. from endwall: not in 9.00 ft
GCpi: 0.18
Wind Duration: 1.60

Snow Criteria (Pg,Pf in PSF)
Pg: NA Ct: NA CAT: NA
Pf: NA Ce: NA
Lu: NA Cs: NA
Snow Duration: NA

Code / Misc Criteria
Bldg Code: FBC 2014 RES
TPI Std: 2007
Rep Factors Used: No
FT/RT:20(0)/10(0)
Plate Type(s):
WAVE

Defl/CSI Criteria

PP Deflection in	loc	L/defl	L/#
VERT(LL): 0.118	D	999	240
VERT(TL): 0.334	D	968	180
HORZ(LL): 0.081	H	-	-
HORZ(TL): 0.228	H	-	-

Creep Factor: 1.5
Max TC CSI: 0.270
Max BC CSI: 0.267
Max Web CSI: 0.243

VIEW Ver: 16.02.01B.0131.17

▲ Maximum Reactions (lbs)

Loc	R	/ U	/ Rw	/ Rh	/ RL	/ W
N	1144	/ 172	/ 551	/ -	/ 209	/ -
O	1565	/ 82	/ 925	/ -	/ -	/ 3.5
G	211	/ 45	/ 168	/ -	/ -	/ 3.5

Wind reactions based on MWFRS
N Min Brg Width Req = -
O Min Brg Width Req = 3.5
G Min Brg Width Req = 1.5
Bearings O & G are a rigid surface.

Members not listed have forces less than 375#

Maximum Top Chord Forces Per Ply (lbs)

Chords	Tens.	Comp.	Chords	Tens.	Comp.
A - B	427	-1842	D - E	573	-2714
B - C	614	-2760	E - F	350	-2639
C - D	614	-2760			

Maximum Bot Chord Forces Per Ply (lbs)

Chords	Tens.	Comp.	Chords	Tens.	Comp.
M - L	1931	-120	K - J	1779	-14
L - K	2753	-255			

Maximum Web Forces Per Ply (lbs)

Webs	Tens.	Comp.	Webs	Tens.	Comp.
A - N	289	-1097	E - J	805	0
A - M	2055	-475	J - F	2188	-45
M - B	239	-830	F - H	269	-1341
B - L	933	-189	I - O	279	-1565
D - K	150	-376	H - I	280	-1496
K - E	1065	-287			

Lumber
Top chord 2x4 SP 2400f-2.0E
Bot chord 2x4 SP 2400f-2.0E
Webs 2x4 SP 2400f-2.0E

Hangers / Ties
Recommended hanger connections are based on manufacturer tested capacities and calculations. Conditions may exist that require different connections than indicated. Refer to manufacturer publication for additional information.

Bearing at location x=0' uses the following support conditions:
Bearing N (0', 17') HUS28
Supporting Member: (2)2x8 SP M-31
(22) 0.148"x3" nails into supporting member,
(4) 0.148"x3" nails into supported member.

Purlins
In lieu of structural panels use purlins to brace all flat TC @ 24" oc.

Wind
Wind loads based on MWFRS with additional C&C member design.
Left end vertical not exposed to wind pressure.

Deflection
Max JT VERT DEFL: LL: 0.12" DL: 0.23". See detail DEFLCAMB1014 for camber recommendations. Provide for adequate drainage of roof.

DOUGLAS FLEMING LICENSE No. 66648 STATE OF FLORIDA PROFESSIONAL ENGINEER
#0 278
04/14/2017

****WARNING**** READ AND FOLLOW ALL NOTES ON THIS DRAWING!
****IMPORTANT**** FURNISH THIS DRAWING TO ALL CONTRACTORS INCLUDING THE INSTALLERS

Trusses require extreme care in fabricating, handling, shipping, installing and bracing. Refer to and follow the latest edition of BCSI (Building Component Safety Information, by TPI and SBCA) for safety practices prior to performing these functions. Installers shall provide temporary bracing per BCSI. Unless noted otherwise,top chord shall have properly attached structural sheathing and bottom chord shall have a properly attached rigid ceiling. Locations shown for permanent lateral restraint of webs shall have bracing installed per BCSI sections B3, B7, or B10, as applicable. Apply plates to each face of truss and position as shown above and on the Joint Details, unless noted otherwise. Refer to drawings 160A-Z for standard plate positions.

Alpine, a division of ITW Building Components Group Inc. shall not be responsible for any deviation from this drawing,any failure to build the truss in conformance with ANSI/TPI 1, or for handling, shipping, installation and bracing of trusses**A seal on this drawing or cover page listing this drawing, indicates acceptance of professional engineering responsibility solely for the design shown. The suitability and use of this drawing for any structure is the responsibility of the Building Designer per ANSI/TPI 1 Sec.2.**

For more information see this job's general notes page and these web sites: ALPINE: www.alpineitw.com; TPI: www.tpinst.org; SBCA: www.sbcindustry.com; ICC: www.iccsafe.org

ALPINE AN ITW COMPANY
2400 Lake Orange Dr.
Suite 150
Orlando FL, 32837

Job Number: 16-0982 HUBBART RESIDENCE **Truss Label:** B10	Ply: 1 Qty: 1	SEQN: 468440 / T48 COMN FROM: CDM	Cust: R215 JRef: 1VZZ2150001 DrwNo: 104.17.1303.51540 KM / DF 04/14/2017

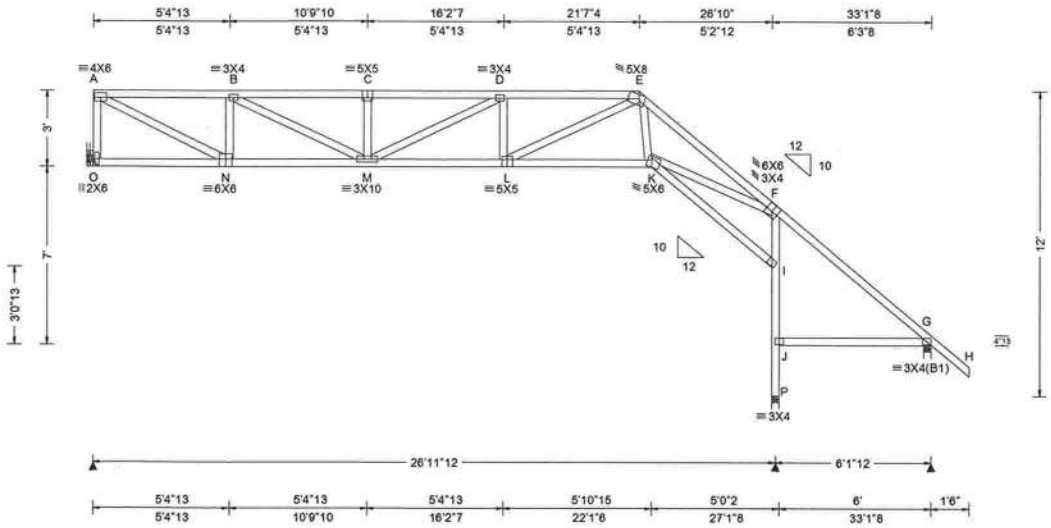

Loading Criteria (psf)

TCLL:	20.00
TCDL:	10.00
BCLL:	0.00
BCDL:	10.00
Des Ld:	40.00
NCBCLL:	10.00
Soffit:	2.00

Load Duration: 1.25
Spacing: 24.0 "

Wind Criteria
Wind Std: ASCE 7-10
Speed: 130 mph
Enclosure: Closed
Risk Category: II
EXP: C
Mean Height: 15.00 ft
TCDL: 5.0 psf
BCDL: 5.0 psf
MWFRS Parallel Dist: h to 2h
C&C Dist a: 3.31 ft
Loc. from endwall: not in 9.00 ft
GCpi: 0.18
Wind Duration: 1.60

Snow Criteria (Pg,Pf in PSF)
Pg: NA Ct: NA CAT: NA
Pf: NA Ce: NA
Lu: NA Cs: NA
Snow Duration: NA

Code / Misc Criteria
Bldg Code: FBC 2014 RES
TPI Std: 2007
Rep Factors Used: Yes
FT/RT:20(0)/10(0)
Plate Type(s):
WAVE

Defl/CSI Criteria

PP Deflection in	loc	L/defl	L/#
VERT(LL): 0.126	D	999	240
VERT(TL): 0.353	D	917	180
HORZ(LL): 0.086	I	-	-
HORZ(TL): 0.242	I	-	-

Creep Factor: 1.5
Max TC CSI: 0.210
Max BC CSI: 0.280
Max Web CSI: 0.215

VIEW Ver: 16.02.01B.0131.17

▲ Maximum Reactions (lbs)

Loc	R	/ U	/ Rw	/ Rh	/ RL	/ W
O	1144	/ 169	/ 550	/ -	/ 233	/ -
P	1547	/ 57	/ 867	/ -	/ -	/ 3.5
G	336	/ 79	/ 324	/ -	/ -	/ 3.5

Wind reactions based on MWFRS
O Min Brg Width Req = -
P Min Brg Width Req = 3.5
G Min Brg Width Req = 1.5
Bearings P & G are a rigid surface.

Members not listed have forces less than 375#

Maximum Top Chord Forces Per Ply (lbs)

Chords	Tens.	Comp.	Chords	Tens.	Comp.
A - B	421	-1842	D - E	555	-2715
B - C	602	-2762	E - F	319	-2642
C - D	602	-2762			

Maximum Bot Chord Forces Per Ply (lbs)

Chords	Tens.	Comp.	Chords	Tens.	Comp.
O - N	403	-178	M - L	2754	-200
N - M	1931	-77	L - K	1783	0

Maximum Web Forces Per Ply (lbs)

Webs	Tens.	Comp.	Webs	Tens.	Comp.
A - O	286	-1097	E - K	805	0
A - N	2054	-468	K - F	2194	0
N - B	236	-831	F - I	231	-1325
B - M	934	-179	J - P	239	-1547
L - E	1061	-290	I - J	243	-1484

Lumber
Top chord 2x4 SP M-31
Bot chord 2x4 SP M-31
Webs 2x4 SP M-31

Hangers / Ties
Recommended hanger connections are based on manufacturer tested capacities and calculations. Conditions may exist that require different connections than indicated. Refer to manufacturer publication for additional information.

Bearing at location x=0' uses the following support conditions:
Bearing O (0', 17') HUS28
Supporting Member: (2)2x8 SP M-31
(22) 0.148"x3" nails into supporting member,
(4) 0.148"x3" nails into supported member.

Purlins
In lieu of structural panels use purlins to brace all flat TC @ 24" oc.

Wind
Wind loads based on MWFRS with additional C&C member design.
Left end vertical not exposed to wind pressure.

Deflection
Max JT VERT DEFL: LL: 0.12" DL: 0.24". See detail DEFLCAMB1014 for camber recommendations. Provide for adequate drainage of roof.

DOUGLAS FLEMING LICENSE No. 66648 STATE OF FLORIDA PROFESSIONAL ENGINEER
#0 278
04/14/2017

****WARNING**** READ AND FOLLOW ALL NOTES ON THIS DRAWING!
****IMPORTANT**** FURNISH THIS DRAWING TO ALL CONTRACTORS INCLUDING THE INSTALLERS

Trusses require extreme care in fabricating, handling, shipping, installing and bracing. Refer to and follow the latest edition of BCSI (Building Component Safety Information, by TPI and SBCA) for safety practices prior to performing these functions. Installers shall provide temporary bracing per BCSI. Unless noted otherwise,top chord shall have properly attached structural sheathing and bottom chord shall have a properly attached rigid ceiling. Locations shown for permanent lateral restraint of webs shall have bracing installed per BCSI sections B3, B7, or B10, as applicable. Apply plates to each face of truss and position as shown above and on the Joint Details, unless noted otherwise. Refer to drawings 160A-Z for standard plate positions.

Alpine, a division of ITW Building Components Group Inc. shall not be responsible for any deviation from this drawing,any failure to build the truss in conformance with ANSI/TPI 1, or for handling, shipping, installation and bracing of trusses**A seal on this drawing or cover page listing this drawing, indicates acceptance of professional engineering responsibility solely for the design shown. The suitability and use of this drawing for any structure is the responsibility of the Building Designer per ANSI/TPI 1 Sec.2.**

For more information see this job's general notes page and these web sites: ALPINE: www.alpineitw.com; TPI: www.tpinst.org; SBCA: www.sbcindustry.com; ICC: www.iccsafe.org

ALPINE AN ITW COMPANY
2400 Lake Orange Dr.
Suite 150
Orlando FL, 32837

Job Number: 16-0982 HUBBART RESIDENCE **Truss Label:** B11	Ply: 2 Qty: 1	SEQN: 468437 / T50 COMN FROM: CDM	Cust: R215 JRef: 1VZZ2150001 DrwNo: 104.17.1303.53390 KM / DF 04/14/2017

2 Complete Trusses Required

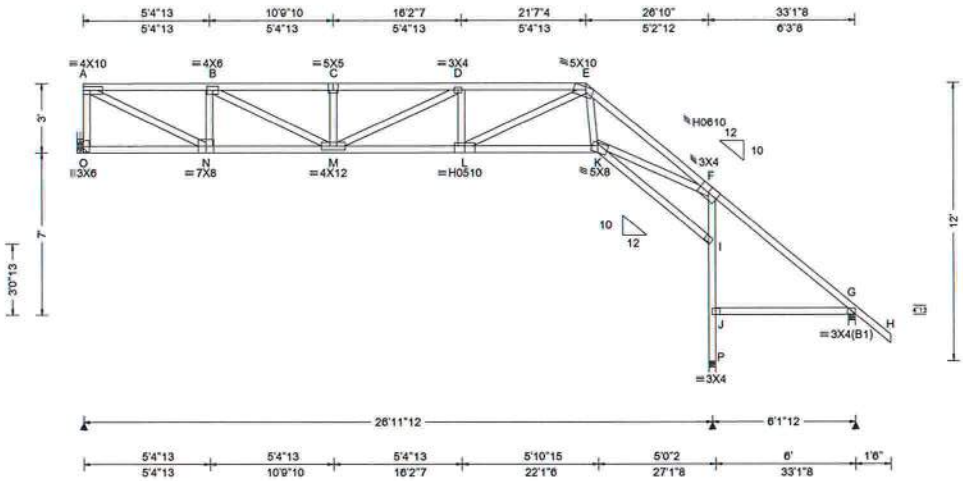

Loading Criteria (psf)	**Wind Criteria**	**Snow Criteria** (Pg,Pf in PSF)	**Defl/CSI Criteria**
TCLL: 20.00 TCDL: 10.00 BCLL: 0.00 BCDL: 10.00 Des Ld: 40.00 NCBCLL: 0.00 Soffit: 2.00 Load Duration: 1.25 Spacing: 94.0 "	Wind Std: ASCE 7-10 Speed: 130 mph Enclosure: Closed Risk Category: II EXP: C Mean Height: 15.00 ft TCDL: 5.0 psf BCDL: 5.0 psf MWFRS Parallel Dist: h to 2h C&C Dist a: 3.31 ft Loc. from endwall: not in 16.67 ft GCpi: 0.18 Wind Duration: 1.60	Pg: NA Ct: NA CAT: NA Pf: NA Ce: NA Lu: NA Cs: NA Snow Duration: NA **Code / Misc Criteria** Bldg Code: FBC 2014 RES TPI Std: 2007 Rep Factors Used: No FT/RT:20(0)/10(0) Plate Type(s): WAVE, HS	PP Deflection in loc L/defl L/# VERT(LL): 0.246 D 999 240 VERT(TL): 0.691 D 468 180 HORZ(LL): 0.168 I - - HORZ(TL): 0.473 I - - Creep Factor: 1.5 Max TC CSI: 0.671 Max BC CSI: 0.604 Max Web CSI: 0.480 VIEW Ver: 16.02.01B.0131.17

▲ Maximum Reactions (lbs)

Loc	R	/ U	/ Rw	/ Rh	/ RL	/ W
O	4480	/ 663	/ 2154	/ -	/ 911	/ -
P	6058	/ 225	/ 3395	/ -	/ -	/ 3.5
G	1314	/ 311	/ 1269	/ -	/ -	/ 3.5

Wind reactions based on MWFRS
O Min Brg Width Req = -
P Min Brg Width Req = 3.5
G Min Brg Width Req = 1.5
Bearings P & G are a rigid surface.

Members not listed have forces less than 375#

Maximum Top Chord Forces Per Ply (lbs)

Chords	Tens.	Comp.	Chords	Tens.	Comp.
A - B	825	-3608	D - E	1086	-5317
B - C	1180	-5408	E - F	625	-5173
C - D	1180	-5408	F - G	585	-224

Maximum Bot Chord Forces Per Ply (lbs)

Chords	Tens.	Comp.	Chords	Tens.	Comp.
O - N	790	-349	L - K	3491	0
N - M	3782	-151	K - I	121	-386
M - L	5393	-392			

Maximum Web Forces Per Ply (lbs)

Webs	Tens.	Comp.	Webs	Tens.	Comp.
A - O	560	-2147	L - E	2077	-569
A - N	4023	-916	E - K	1577	0
N - B	461	-1627	K - F	4296	0
B - M	1830	-351	F - I	453	-2595
C - M	227	-636	J - P	469	-3029
D - L	298	-733	I - J	476	-2905

Lumber

Top chord 2x4 SP M-31
Bot chord 2x4 SP M-31
Webs 2x4 SP M-31

Nailnote

Nail Schedule:0.131"x3", min. nails
Top Chord: 1 Row @11.50" o.c.
Bot Chord: 1 Row @12.00" o.c.
Webs : 1 Row @ 4" o.c.
Use equal spacing between rows and stagger nails in each row to avoid splitting.

Hangers / Ties

Recommended hanger connections are based on manufacturer tested capacities and calculations. Conditions may exist that require different connections than indicated. Refer to manufacturer publication for additional information.

Bearing at location x=0' uses the following support conditions:
Bearing O (0', 17') HGUS28-2
Supporting Member: (2)2x8 SP M-31
(36) 0.162"x3.5" nails into supporting member,
(6) 0.162"x3.5" nails into supported member.

Purlins

In lieu of structural panels use purlins to brace TC @ 24" oc.

Wind

Wind loads based on MWFRS with additional C&C member design.

Left end vertical not exposed to wind pressure.

Deflection

Max JT VERT DEFL: LL: 0.24" DL: 0.47". See detail DEFLCAMB1014 for camber recommendations. Provide for adequate drainage of roof.

DOUGLAS FLEMING
LICENSE
No. 66648
STATE OF
FLORIDA
PROFESSIONAL ENGINEER

#0 278

04/14/2017

****WARNING**** READ AND FOLLOW ALL NOTES ON THIS DRAWING!
****IMPORTANT**** FURNISH THIS DRAWING TO ALL CONTRACTORS INCLUDING THE INSTALLERS

Trusses require extreme care in fabricating, handling, shipping, installing and bracing. Refer to and follow the latest edition of BCSI (Building Component Safety Information, by TPI and SBCA) for safety practices prior to performing these functions. Installers shall provide temporary bracing per BCSI. Unless noted otherwise,top chord shall have properly attached structural sheathing and bottom chord shall have a properly attached rigid ceiling. Locations shown for permanent lateral restraint of webs shall have bracing installed per BCSI sections B3, B7, or B10, as applicable. Apply plates to each face of truss and position as shown above and on the Joint Details, unless noted otherwise. Refer to drawings 160A-Z for standard plate positions.

Alpine, a division of ITW Building Components Group Inc. shall not be responsible for any deviation from this drawing,any failure to build the truss in conformance with ANSI/TPI 1, or for handling, shipping, installation and bracing of trusses**A seal on this drawing or cover page listing this drawing, indicates acceptance of professional engineering responsibility solely for the design shown. The suitability and use of this drawing for any structure is the responsibility of the Building Designer per ANSI/TPI 1 Sec.2.**

For more information see this job's general notes page and these web sites: ALPINE: www.alpineitw.com; TPI: www.tpinst.org; SBCA: www.sbcindustry.com; ICC: www.iccsafe.org

ALPINE
AN ITW COMPANY
2400 Lake Orange Dr.
Suite 150
Orlando FL, 32837

Job Number: 16-0982 HUBBART RESIDENCE **Truss Label:** C01	Ply: 1 Qty: 1	SEQN: 455449 / T7 GABL FROM: CDM	Cust: R215 JRef: 1VZZ2150001 DrwNo: 104.17.1303.55843 KM / DF 04/14/2017

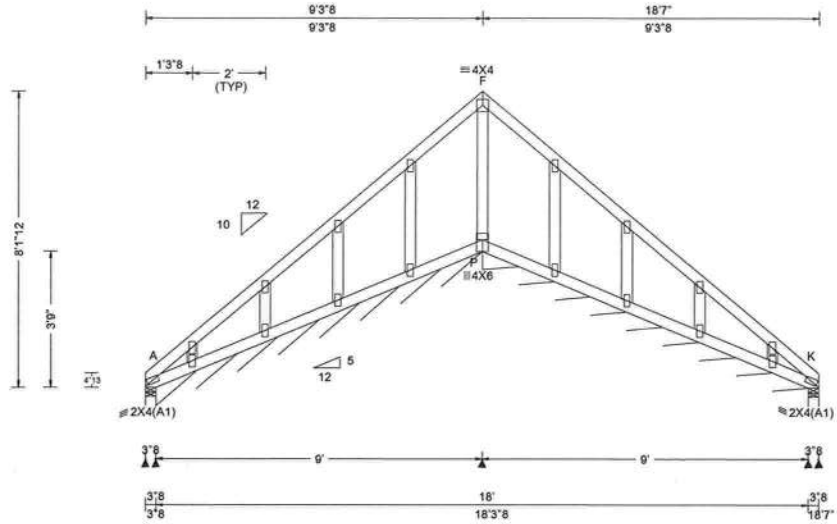

Loading Criteria (psf)
TCLL: 20.00
TCDL: 10.00
BCLL: 0.00
BCDL: 10.00
Des Ld: 40.00
NCBCLL: 10.00
Soffit: 2.00
Load Duration: 1.25
Spacing: 24.0 "

Wind Criteria
Wind Std: ASCE 7-10
Speed: 130 mph
Enclosure: Closed
Risk Category: II
EXP: C
Mean Height: 15.00 ft
TCDL: 5.0 psf
BCDL: 5.0 psf
MWFRS Parallel Dist: 0 to h/2
C&C Dist a: 3.00 ft
Loc. from endwall: Any
GCpi: 0.18
Wind Duration: 1.60

Snow Criteria (Pg,Pf in PSF)
Pg: NA Ct: NA CAT: NA
Pf: NA Ce: NA
Lu: NA Cs: NA
Snow Duration: NA

Code / Misc Criteria
Bldg Code: FBC 2014 RES
TPI Std: 2007
Rep Factors Used: Yes
FT/RT:20(0)/10(0)
Plate Type(s):
WAVE

Defl/CSI Criteria

PP Deflection in	loc	L/defl	L/#
VERT(LL): 0.001	F	999	240
VERT(TL): 0.001	F	999	180
HORZ(LL): 0.002	I	-	-
HORZ(TL): 0.004	H	-	-

Creep Factor: 1.5
Max TC CSI: 0.021
Max BC CSI: 0.015
Max Web CSI: 0.034

VIEW Ver: 16.01.00D.0413.17

▲ Maximum Reactions (lbs), or *=PLF

Loc	R	/ U	/ Rw	/ Rh	/ RL	/ W
A	70	/ 140	/ 188	/ -	/ 231	/ 3.5
A*	91	/ 20	/ 90	/ -	/ -	/ 107
P*	74	/ 29	/ 65	/ -	/ -	/ 108
K	70	/ 18	/ 66	/ -	/ -	/ 3.5

Wind reactions based on MWFRS
A Min Brg Width Req = 1.5
A Min Brg Width Req = -
P Min Brg Width Req = -
K Min Brg Width Req = 1.5
Bearings A, A, P, & K are a rigid surface.

Members not listed have forces less than 375#

Lumber
Top chord 2x4 SP M-31
Bot chord 2x4 SP M-31
Webs 2x4 SP M-31

Plating Notes
All plates are 2X4 except as noted.

Wind
Wind loads based on MWFRS with additional C&C member design.

Additional Notes
See DWGS S14015ENC100815 & GBLLETIN1014 for gable wind bracing and other requirements.
Shim all supports to solid bearing.

#0 278
04/14/2017

****WARNING**** READ AND FOLLOW ALL NOTES ON THIS DRAWING!
****IMPORTANT**** FURNISH THIS DRAWING TO ALL CONTRACTORS INCLUDING THE INSTALLERS

Trusses require extreme care in fabricating, handling, shipping, installing and bracing. Refer to and follow the latest edition of BCSI (Building Component Safety Information, by TPI and SBCA) for safety practices prior to performing these functions. Installers shall provide temporary bracing per BCSI. Unless noted otherwise,top chord shall have properly attached structural sheathing and bottom chord shall have a properly attached rigid ceiling. Locations shown for permanent lateral restraint of webs shall have bracing installed per BCSI sections B3, B7, or B10, as applicable. Apply plates to each face of truss and position as shown above and on the Joint Details, unless noted otherwise. Refer to drawings 160A-Z for standard plate positions.

Alpine, a division of ITW Building Components Group Inc. shall not be responsible for any deviation from this drawing,any failure to build the truss in conformance with ANSI/TPI 1, or for handling, shipping, installation and bracing of trusses**A seal on this drawing or cover page listing this drawing, indicates acceptance of professional engineering responsibility solely for the design shown. The suitability and use of this drawing for any structure is the responsibility of the Building Designer per ANSI/TPI 1 Sec.2.**

For more information see this job's general notes page and these web sites: ALPINE: www.alpineitw.com; TPI: www.tpinst.org; SBCA: www.sbcindustry.com; ICC: www.iccsafe.org

ALPINE
AN ITW COMPANY
2400 Lake Orange Dr.
Suite 150
Orlando FL, 32837

Job Number: 16-0982 HUBBART RESIDENCE **Truss Label:** C02	Ply: 1 Qty: 1	SEQN: 455399 / T9 COMN FROM: CDM	Cust: R215 JRef: 1VZZ2150001 DrwNo: 104.17.1303.57460 KM / DF 04/14/2017

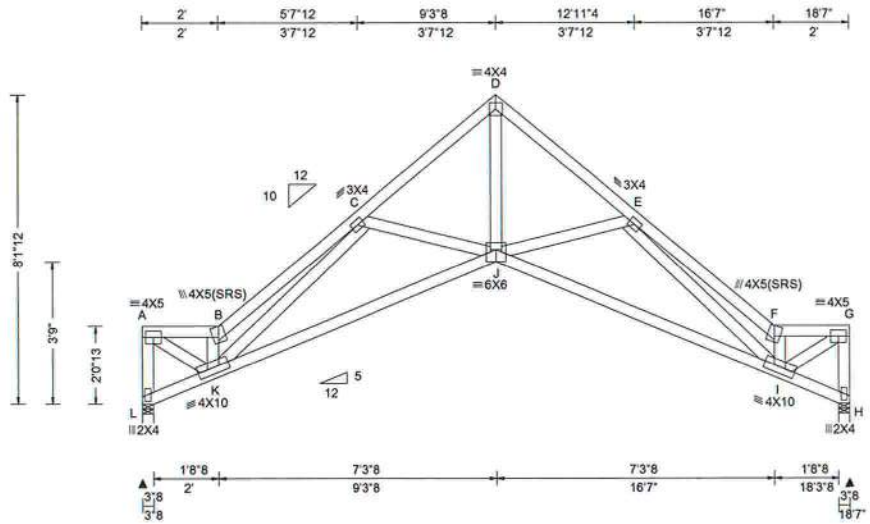

Loading Criteria (psf)

TCLL:	20.00
TCDL:	10.00
BCLL:	0.00
BCDL:	10.00
Des Ld:	40.00
NCBCLL:	10.00
Soffit:	2.00

Load Duration: 1.25
Spacing: 24.0 "

Wind Criteria
Wind Std: ASCE 7-10
Speed: 130 mph
Enclosure: Closed
Risk Category: II
EXP: C
Mean Height: 15.11 ft
TCDL: 5.0 psf
BCDL: 5.0 psf
MWFRS Parallel Dist: 0 to h/2
C&C Dist a: 3.00 ft
Loc. from endwall: Any
GCpi: 0.18
Wind Duration: 1.60

Snow Criteria (Pg,Pf in PSF)
Pg: NA Ct: NA CAT: NA
Pf: NA Ce: NA
Lu: NA Cs: NA
Snow Duration: NA

Code / Misc Criteria
Bldg Code: FBC 2014 RES
TPI Std: 2007
Rep Factors Used: Yes
FT/RT:20(0)/10(0)
Plate Type(s):
WAVE

Defl/CSI Criteria

PP Deflection in	loc	L/defl	L/#
VERT(LL): 0.051	J	999	240
VERT(TL): 0.141	J	999	180
HORZ(LL): 0.056	H	-	-
HORZ(TL): 0.155	H	-	-

Creep Factor: 1.5
Max TC CSI: 0.091
Max BC CSI: 0.271
Max Web CSI: 0.144

VIEW Ver: 16.01.00D.0413.17

▲ Maximum Reactions (lbs)

Loc	R	/ U	/ Rw	/ Rh	/ RL	/ W
L	815	/ 113	/ 451	/ -	/ 181	/ 3.5
H	815	/ 113	/ 451	/ -	/ -	/ 3.5

Wind reactions based on MWFRS
L Min Brg Width Req = 1.5
H Min Brg Width Req = 1.5
Bearings L & H are a rigid surface.

Members not listed have forces less than 375#

Maximum Top Chord Forces Per Ply (lbs)

Chords	Tens.	Comp.	Chords	Tens.	Comp.
A - B	295	- 1317	D - E	300	- 1354
B - C	497	- 1912	E - F	497	- 1912
C - D	300	- 1354	F - G	295	- 1317

Maximum Bot Chord Forces Per Ply (lbs)

Chords	Tens.	Comp.	Chords	Tens.	Comp.
K - J	1418	- 278	J - I	1418	- 278

Maximum Web Forces Per Ply (lbs)

Webs	Tens.	Comp.	Webs	Tens.	Comp.
A - L	189	- 810	F - I	380	- 1346
A - K	1512	- 338	I - G	1512	- 338
K - B	380	- 1346	G - H	189	- 810
D - J	1394	- 278			

Lumber

Top chord 2x4 SP M-31
Bot chord 2x4 SP M-31
Webs 2x4 SP M-31

Purlins

In lieu of structural panels use purlins to brace all flat TC @ 24" oc.

Wind

Wind loads based on MWFRS with additional C&C member design.

#0 278
04/14/2017

****WARNING**** READ AND FOLLOW ALL NOTES ON THIS DRAWING!
****IMPORTANT**** FURNISH THIS DRAWING TO ALL CONTRACTORS INCLUDING THE INSTALLERS

Trusses require extreme care in fabricating, handling, shipping, installing and bracing. Refer to and follow the latest edition of BCSI (Building Component Safety Information, by TPI and SBCA) for safety practices prior to performing these functions. Installers shall provide temporary bracing per BCSI. Unless noted otherwise,top chord shall have properly attached structural sheathing and bottom chord shall have a properly attached rigid ceiling. Locations shown for permanent lateral restraint of webs shall have bracing installed per BCSI sections B3, B7, or B10, as applicable. Apply plates to each face of truss and position as shown above and on the Joint Details, unless noted otherwise. Refer to drawings 160A-Z for standard plate positions.

Alpine, a division of ITW Building Components Group Inc. shall not be responsible for any deviation from this drawing,any failure to build the truss in conformance with ANSI/TPI 1, or for handling, shipping, installation and bracing of trusses**A seal on this drawing or cover page listing this drawing, indicates acceptance of professional engineering responsibility solely for the design shown. The suitability and use of this drawing for any structure is the responsibility of the Building Designer per ANSI/TPI 1 Sec.2.**

For more information see this job's general notes page and these web sites: ALPINE: www.alpineitw.com; TPI: www.tpinst.org; SBCA: www.sbcindustry.com; ICC: www.iccsafe.org

ALPINE
AN ITW COMPANY
2400 Lake Orange Dr.
Suite 150
Orlando FL, 32837

Job Number: 16-0982 HUBBART RESIDENCE **Truss Label:** C03	Ply: 1 Qty: 1	SEQN: 455398 / T24 COMN FROM: CDM	Cust: R215 JRef: 1VZZ2150001 DrwNo: 104.17.1303.58863 KM / DF 04/14/2017

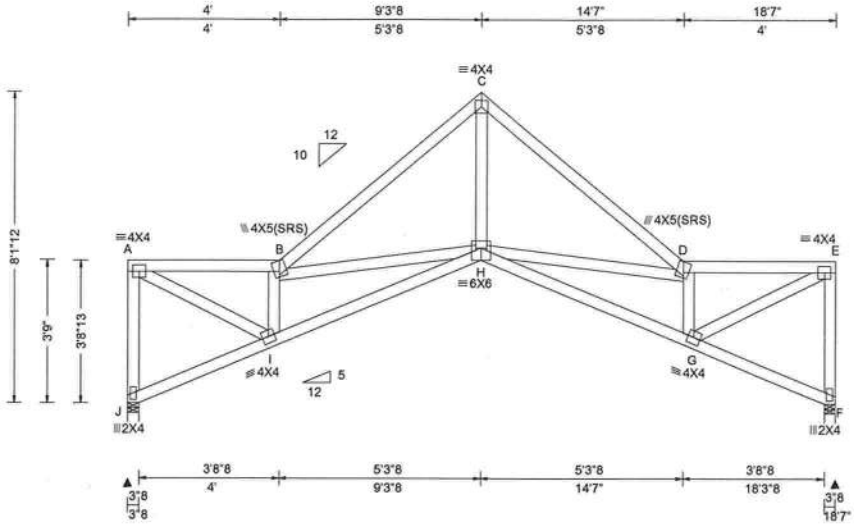

Loading Criteria (psf)

TCLL:	20.00
TCDL:	10.00
BCLL:	0.00
BCDL:	10.00
Des Ld:	40.00
NCBCLL:	10.00
Soffit:	2.00

Load Duration: 1.25
Spacing: 24.0 "

Wind Criteria
Wind Std: ASCE 7-10
Speed: 130 mph
Enclosure: Closed
Risk Category: II
EXP: C
Mean Height: 15.94 ft
TCDL: 5.0 psf
BCDL: 5.0 psf
MWFRS Parallel Dist: 0 to h/2
C&C Dist a: 3.00 ft
Loc. from endwall: not in 4.50 ft
GCpi: 0.18
Wind Duration: 1.60

Snow Criteria (Pg,Pf in PSF)
Pg: NA Ct: NA CAT: NA
Pf: NA Ce: NA
Lu: NA Cs: NA
Snow Duration: NA

Code / Misc Criteria
Bldg Code: FBC 2014 RES
TPI Std: 2007
Rep Factors Used: Yes
FT/RT:20(0)/10(0)
Plate Type(s):
WAVE

Defl/CSI Criteria

PP Deflection in	loc	L/defl	L/#
VERT(LL): 0.048	H	999	240
VERT(TL): 0.134	H	999	180
HORZ(LL): 0.051	F	-	-
HORZ(TL): 0.143	F	-	-

Creep Factor: 1.5
Max TC CSI: 0.124
Max BC CSI: 0.194
Max Web CSI: 0.138

VIEW Ver: 16.01.00D.0413.17

▲ Maximum Reactions (lbs)

Loc	R	/ U	/ Rw	/ Rh	/ RL	/ W
J	815	/ 129	/ 448	/ -	/ 132	/ 3.5
F	815	/ 129	/ 448	/ -	/ -	/ 3.5

Wind reactions based on MWFRS
J Min Brg Width Req = 1.5
F Min Brg Width Req = 1.5
Bearings J & F are a rigid surface.

Members not listed have forces less than 375#

Maximum Top Chord Forces Per Ply (lbs)

Chords	Tens.	Comp.	Chords	Tens.	Comp.
A - B	300	-1290	C - D	291	-1385
B - C	292	-1385	D - E	299	-1290

Maximum Bot Chord Forces Per Ply (lbs)

Chords	Tens.	Comp.	Chords	Tens.	Comp.
I - H	1573	-358	H - G	1573	-357

Maximum Web Forces Per Ply (lbs)

Webs	Tens.	Comp.	Webs	Tens.	Comp.
A - J	201	-781	H - D	204	-444
A - I	1451	-337	D - G	317	-1177
I - B	317	-1177	G - E	1451	-336
B - H	204	-444	E - F	201	-781
C - H	1262	-214			

Lumber

Top chord 2x4 SP M-31
Bot chord 2x4 SP M-31
Webs 2x4 SP M-31

Purlins

In lieu of structural panels use purlins to brace all flat TC @ 24" oc.

Wind

Wind loads based on MWFRS with additional C&C member design.

End verticals not exposed to wind pressure.

Additional Notes

Full Height Blocking reinforcement required to prevent buckling of members over the bearings: bearing 1 located at 0.00'

#0 278
04/14/2017

****WARNING**** READ AND FOLLOW ALL NOTES ON THIS DRAWING!
****IMPORTANT**** FURNISH THIS DRAWING TO ALL CONTRACTORS INCLUDING THE INSTALLERS

Trusses require extreme care in fabricating, handling, shipping, installing and bracing. Refer to and follow the latest edition of BCSI (Building Component Safety Information, by TPI and SBCA) for safety practices prior to performing these functions. Installers shall provide temporary bracing per BCSI. Unless noted otherwise,top chord shall have properly attached structural sheathing and bottom chord shall have a properly attached rigid ceiling. Locations shown for permanent lateral restraint of webs shall have bracing installed per BCSI sections B3, B7, or B10, as applicable. Apply plates to each face of truss and position as shown above and on the Joint Details, unless noted otherwise. Refer to drawings 160A-Z for standard plate positions.

Alpine, a division of ITW Building Components Group Inc. shall not be responsible for any deviation from this drawing,any failure to build the truss in conformance with ANSI/TPI 1, or for handling, shipping, installation and bracing of trusses**A seal on this drawing or cover page listing this drawing, indicates acceptance of professional engineering responsibility solely for the design shown. The suitability and use of this drawing for any structure is the responsibility of the Building Designer per ANSI/TPI 1 Sec.2.**

For more information see this job's general notes page and these web sites: ALPINE: www.alpineitw.com; TPI: www.tpinst.org; SBCA: www.sbcindustry.com; ICC: www.iccsafe.org

ALPINE™ AN ITW COMPANY
2400 Lake Orange Dr.
Suite 150
Orlando FL, 32837

Job Number: 16-0982 HUBBART RESIDENCE **Truss Label:** C04	Ply: 1 Qty: 1	SEQN: 455397 / T20 COMN FROM: CDM	Cust: R215 JRef: 1VZZ2150001 DrwNo: 104.17.1304.00157 KM / DF 04/14/2017

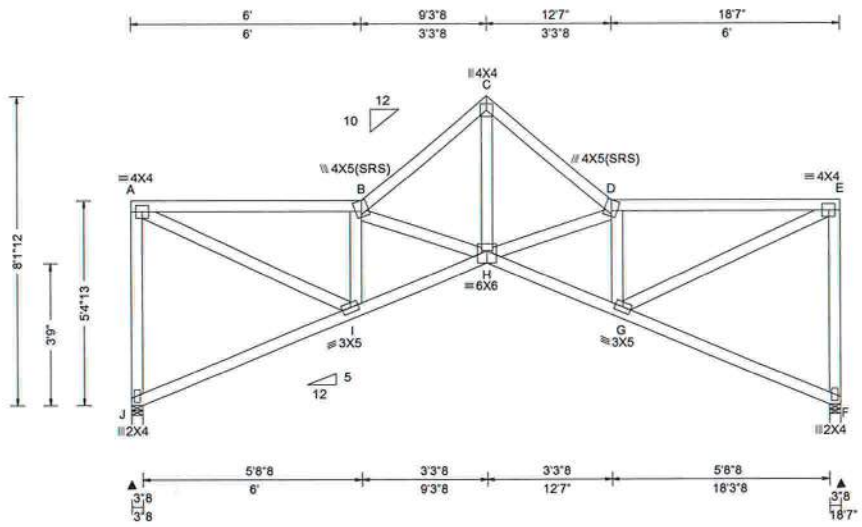

Loading Criteria (psf)

TCLL:	20.00
TCDL:	10.00
BCLL:	0.00
BCDL:	10.00
Des Ld:	40.00
NCBCLL:	10.00
Soffit:	2.00

Load Duration: 1.25
Spacing: 24.0 "

Wind Criteria
Wind Std: ASE 7-10
Speed: 130 mph
Enclosure: Closed
Risk Category: II
EXP: C
Mean Height: 16.77 ft
TCDL: 5.0 psf
BCDL: 5.0 psf
MWFRS Parallel Dist: 0 to h/2
C&C Dist a: 3.00 ft
Loc. from endwall: not in 4.50 ft
GCpi: 0.18
Wind Duration: 1.60

Snow Criteria (Pg,Pf in PSF)
Pg: NA Ct: NA CAT: NA
Pf: NA Ce: NA
Lu: NA Cs: NA
Snow Duration: NA

Code / Misc Criteria
Bldg Code: FBC 2014 RES
TPI Std: 2007
Rep Factors Used: Yes
FT/RT:20(0)/10(0)
Plate Type(s):
WAVE

Defl/CSI Criteria

PP Deflection in	loc	L/defl	L/#
VERT(LL): 0.046	H	999	240
VERT(TL): 0.129	H	999	180
HORZ(LL): 0.045	F	-	-
HORZ(TL): 0.125	F	-	-

Creep Factor: 1.5
Max TC CSI: 0.257
Max BC CSI: 0.208
Max Web CSI: 0.210

VIEW Ver: 16.01.00D.0413.17

▲ Maximum Reactions (lbs)

Loc	R	/ U	/ Rw	/ Rh	/ RL	/ W
J	815	/ 146	/ 434	/ -	/ 81	/ 3.5
F	815	/ 146	/ 434	/ -	/ -	/ 3.5

Wind reactions based on MWFRS
J Min Brg Width Req = 1.5
F Min Brg Width Req = 1.5
Bearings J & F are a rigid surface.

Members not listed have forces less than 375#

Maximum Top Chord Forces Per Ply (lbs)

Chords	Tens.Comp.	Chords	Tens. Comp.
A - B	302 - 1214	C - D	337 - 1311
B - C	338 - 1311	D - E	302 - 1214

Maximum Bot Chord Forces Per Ply (lbs)

Chords	Tens.Comp.	Chords	Tens. Comp.
I - H	1414 - 339	H - G	1414 - 340

Maximum Web Forces Per Ply (lbs)

Webs	Tens.Comp.	Webs	Tens. Comp.
A - J	221 - 761	H - D	144 - 389
A - I	1350 - 335	D - G	302 - 1010
I - B	302 - 1010	G - E	1350 - 336
B - H	144 - 389	E - F	221 - 761
C - H	1413 - 348		

Lumber
Top chord 2x4 SP M-31
Bot chord 2x4 SP M-31
Webs 2x4 SP M-31

Purlins
In lieu of structural panels use purlins to brace all flat TC @ 24" oc.

Wind
Wind loads based on MWFRS with additional C&C member design.
End verticals not exposed to wind pressure.

#0 278
04/14/2017

****WARNING**** READ AND FOLLOW ALL NOTES ON THIS DRAWING!
****IMPORTANT**** FURNISH THIS DRAWING TO ALL CONTRACTORS INCLUDING THE INSTALLERS

Trusses require extreme care in fabricating, handling, shipping, installing and bracing. Refer to and follow the latest edition of BCSI (Building Component Safety Information, by TPI and SBCA) for safety practices prior to performing these functions. Installers shall provide temporary bracing per BCSI. Unless noted otherwise,top chord shall have properly attached structural sheathing and bottom chord shall have a properly attached rigid ceiling. Locations shown for permanent lateral restraint of webs shall have bracing installed per BCSI sections B3, B7, or B10, as applicable. Apply plates to each face of truss and position as shown above and on the Joint Details, unless noted otherwise. Refer to drawings 160A-Z for standard plate positions.

Alpine, a division of ITW Building Components Group Inc. shall not be responsible for any deviation from this drawing,any failure to build the truss in conformance with ANSI/TPI 1, or for handling, shipping, installation and bracing of trusses**A seal on this drawing or cover page listing this drawing, indicates acceptance of professional engineering responsibility solely for the design shown. The suitability and use of this drawing for any structure is the responsibility of the Building Designer per ANSI/TPI 1 Sec.2.**

For more information see this job's general notes page and these web sites: ALPINE: www.alpineitw.com; TPI: www.tpinst.org; SBCA: www.sbcindustry.com; ICC: www.iccsafe.org

ALPINE
AN ITW COMPANY
2400 Lake Orange Dr.
Suite 150
Orlando FL, 32837

Job Number: 16-0982 HUBBART RESIDENCE **Truss Label:** C05	Ply: 1 Qty: 1	SEQN: 455396 / T1 COMN FROM: CDM	Cust: R215 JRef: 1VZZ2150001 DrwNo: 104.17.1304.01573 KM / DF 04/14/2017

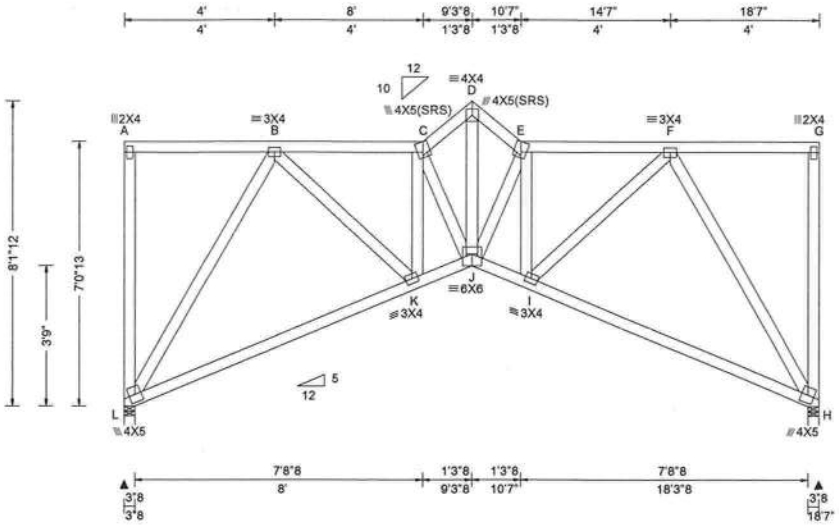

Loading Criteria (psf)	**Wind Criteria**	**Snow Criteria** (Pg,Pf in PSF)	**Defl/CSI Criteria**
TCLL: 20.00 TCDL: 10.00 BCLL: 0.00 BCDL: 10.00 Des Ld: 40.00 NCBCLL: 10.00 Soffit: 2.00 Load Duration: 1.25 Spacing: 24.0 "	Wind Std: ASCE 7-10 Speed: 130 mph Enclosure: Closed Risk Category: II EXP: C Mean Height: 17.61 ft TCDL: 5.0 psf BCDL: 5.0 psf MWFRS Parallel Dist: h/2 to h C&C Dist a: 3.00 ft Loc. from endwall: not in 9.00 ft GCpi: 0.18 Wind Duration: 1.60	Pg: NA Ct: NA CAT: NA Pf: NA Ce: NA Lu: NA Cs: NA Snow Duration: NA **Code / Misc Criteria** Bldg Code: FBC 2014 RES TPI Std: 2007 Rep Factors Used: Yes FT/RT:20(0)/10(0) Plate Type(s): WAVE	PP Deflection in loc L/defl L/# VERT(LL): 0.032 J 999 240 VERT(TL): 0.088 J 999 180 HORZ(LL): 0.034 H - - HORZ(TL): 0.095 H - - Creep Factor: 1.5 Max TC CSI: 0.115 Max BC CSI: 0.322 Max Web CSI: 0.598 VIEW Ver: 16.01.00D.0413.17

▲ Maximum Reactions (lbs)

Loc	R	/ U	/ Rw	/ Rh	/ RL	/ W
L	815	/ 138	/ 410	/ -	/ 31	/ 3.5
H	815	/ 138	/ 410	/ -	/ -	/ 3.5

Wind reactions based on MWFRS
L Min Brg Width Req = 1.5
H Min Brg Width Req = 1.5
Bearings L & H are a rigid surface.

Members not listed have forces less than 375#

Maximum Top Chord Forces Per Ply (lbs)

Chords	Tens.	Comp.	Chords	Tens.	Comp.
B - C	252	- 1047	D - E	322	- 1220
C - D	322	- 1220	E - F	252	- 1047

Maximum Bot Chord Forces Per Ply (lbs)

Chords	Tens.	Comp.	Chords	Tens.	Comp.
L - K	574	- 153	J - I	1136	- 266
K - J	1136	- 266	I - H	574	- 153

Maximum Web Forces Per Ply (lbs)

Webs	Tens.	Comp.	Webs	Tens.	Comp.
L - B	275	- 985	J - E	93	- 379
B - K	769	- 158	E - I	204	- 552
K - C	204	- 552	I - F	769	- 158
C - J	93	- 379	F - H	275	- 985
D - J	1399	- 365			

Lumber

Top chord 2x4 SP M-31
Bot chord 2x4 SP M-31
Webs 2x4 SP M-31

Purlins

In lieu of structural panels use purlins to brace all flat TC @ 24" oc.

Wind

Wind loads based on MWFRS with additional C&C member design.

End verticals not exposed to wind pressure.

#0 278
04/14/2017

****WARNING**** READ AND FOLLOW ALL NOTES ON THIS DRAWING!
****IMPORTANT**** FURNISH THIS DRAWING TO ALL CONTRACTORS INCLUDING THE INSTALLERS

Trusses require extreme care in fabricating, handling, shipping, installing and bracing. Refer to and follow the latest edition of BCSI (Building Component Safety Information, by TPI and SBCA) for safety practices prior to performing these functions. Installers shall provide temporary bracing per BCSI. Unless noted otherwise,top chord shall have properly attached structural sheathing and bottom chord shall have a properly attached rigid ceiling. Locations shown for permanent lateral restraint of webs shall have bracing installed per BCSI sections B3, B7, or B10, as applicable. Apply plates to each face of truss and position as shown above and on the Joint Details, unless noted otherwise. Refer to drawings 160A-Z for standard plate positions.

Alpine, a division of ITW Building Components Group Inc. shall not be responsible for any deviation from this drawing,any failure to build the truss in conformance with ANSI/TPI 1, or for handling, shipping, installation and bracing of trusses**A seal on this drawing or cover page listing this drawing, indicates acceptance of professional engineering responsibility solely for the design shown. The suitability and use of this drawing for any structure is the responsibility of the Building Designer per ANSI/TPI 1 Sec.2.**

For more information see this job's general notes page and these web sites: ALPINE: www.alpineitw.com; TPI: www.tpinst.org; SBCA: www.sbcindustry.com; ICC: www.iccsafe.org

ALPINE
AN ITW COMPANY
2400 Lake Orange Dr.
Suite 150
Orlando FL, 32837

Job Number: 16-0982 HUBBART RESIDENCE **Truss Label:** C06	Ply: 1 Qty: 1	SEQN: 455395 / T43 FLAT FROM: CDM	Cust: R215 JRef: 1VZZ2150001 DrwNo: 104.17.1304.02927 KM / DF 04/14/2017

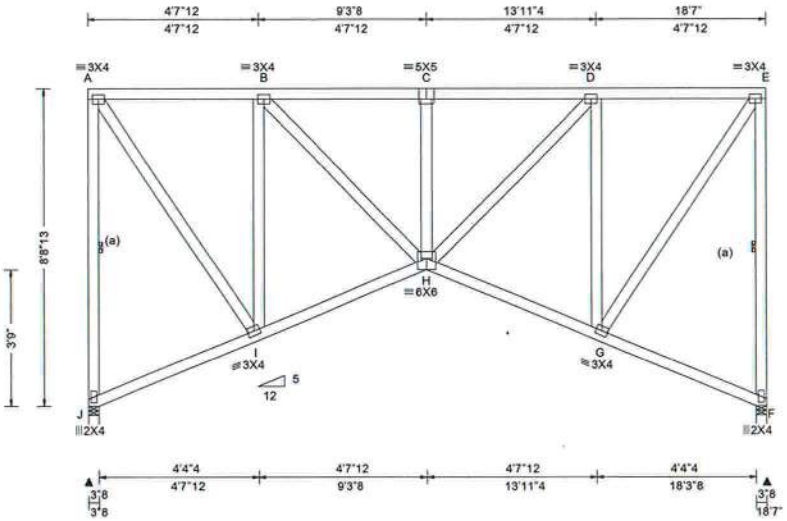

Loading Criteria (psf)

TCLL:	20.00
TCDL:	10.00
BCLL:	0.00
BCDL:	10.00
Des Ld:	40.00
NCBCLL:	10.00
Soffit:	2.00

Load Duration: 1.25
Spacing: 24.0 "

Wind Criteria
Wind Std: ASCE 7-10
Speed: 130 mph
Enclosure: Closed
Risk Category: II
EXP: C
Mean Height: 18.73 ft
TCDL: 5.0 psf
BCDL: 5.0 psf
MWFRS Parallel Dist: h/2 to h
C&C Dist a: 3.00 ft
Loc. from endwall: not in 9.00 ft
GCpi: 0.18
Wind Duration: 1.60

Snow Criteria (Pg,Pf in PSF)
Pg: NA Ct: NA CAT: NA
Pf: NA Ce: NA
Lu: NA Cs: NA
Snow Duration: NA

Code / Misc Criteria
Bldg Code: FBC 2014 RES
TPI Std: 2007
Rep Factors Used: Yes
FT/RT:20(0)/10(0)
Plate Type(s):
WAVE

Defl/CSI Criteria

PP Deflection in	loc	L/defl	L/#
VERT(LL): 0.021	C	999	240
VERT(TL): 0.055	C	999	180
HORZ(LL): 0.020	F	-	-
HORZ(TL): 0.052	F	-	-

Creep Factor: 1.5
Max TC CSI: 0.126
Max BC CSI: 0.121
Max Web CSI: 0.301

VIEW Ver: 16.01.00D.0413.17

▲ Maximum Reactions (lbs)

Loc	R	/ U	/ Rw	/ Rh	/ RL	/ W
J	759	/ 183	/ 389	/ -	/ -	/ 3.5
F	759	/ 183	/ 389	/ -	/ -	/ 3.5

Wind reactions based on MWFRS
J Min Brg Width Req = 1.5
F Min Brg Width Req = 1.5
Bearings J & F are a rigid surface.

Members not listed have forces less than 375#

Maximum Top Chord Forces Per Ply (lbs)

Chords	Tens.	Comp.	Chords	Tens.	Comp.
A - B	112	-414	C - D	196	-773
B - C	196	-773	D - E	112	-414

Maximum Bot Chord Forces Per Ply (lbs)

Chords	Tens.	Comp.	Chords	Tens.	Comp.
I - H	492	-118	H - G	492	-118

Maximum Web Forces Per Ply (lbs)

Webs	Tens.	Comp.	Webs	Tens.	Comp.
A - J	226	-720	H - D	483	-116
A - I	733	-198	D - G	227	-671
I - B	227	-671	G - E	733	-198
B - H	483	-116	E - F	226	-720

Lumber

Top chord 2x4 SP M-31
Bot chord 2x4 SP M-31
Webs 2x4 SP M-31

Bracing

(a) Continuous lateral restraint equally spaced on member.

Wind

Wind loads based on MWFRS with additional C&C member design.

End verticals not exposed to wind pressure.

#0 278
04/14/2017

****WARNING**** READ AND FOLLOW ALL NOTES ON THIS DRAWING!
****IMPORTANT**** FURNISH THIS DRAWING TO ALL CONTRACTORS INCLUDING THE INSTALLERS

Trusses require extreme care in fabricating, handling, shipping, installing and bracing. Refer to and follow the latest edition of BCSI (Building Component Safety Information, by TPI and SBCA) for safety practices prior to performing these functions. Installers shall provide temporary bracing per BCSI. Unless noted otherwise,top chord shall have properly attached structural sheathing and bottom chord shall have a properly attached rigid ceiling. Locations shown for permanent lateral restraint of webs shall have bracing installed per BCSI sections B3, B7, or B10, as applicable. Apply plates to each face of truss and position as shown above and on the Joint Details, unless noted otherwise. Refer to drawings 160A-Z for standard plate positions.

Alpine, a division of ITW Building Components Group Inc. shall not be responsible for any deviation from this drawing,any failure to build the truss in conformance with ANSI/TPI 1, or for handling, shipping, installation and bracing of trusses**A seal on this drawing or cover page listing this drawing, indicates acceptance of professional engineering responsibility solely for the design shown. The suitability and use of this drawing for any structure is the responsibility of the Building Designer per ANSI/TPI 1 Sec.2.**

For more information see this job's general notes page and these web sites: ALPINE: www.alpineitw.com; TPI: www.tpinst.org; SBCA: www.sbcindustry.com; ICC: www.iccsafe.org

ALPINE
AN ITW COMPANY
2400 Lake Orange Dr.
Suite 150
Orlando FL, 32837

Job Number: 16-0982 HUBBART RESIDENCE **Truss Label:** C07	Ply: 1 Qty: 1	SEQN: 455391 / T42 FLAT FROM: CDM	Cust: R215 JRef: 1VZZ2150001 DrwNo: 104.17.1304.04093 KM / DF 04/14/2017

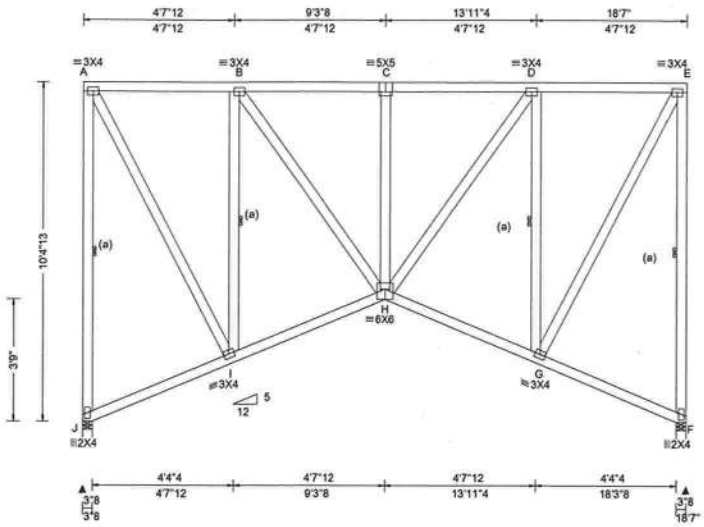

Loading Criteria (psf)	**Wind Criteria**	**Snow Criteria** (Pg,Pf in PSF)	**Defl/CSI Criteria**
TCLL: 20.00 TCDL: 10.00 BCLL: 0.00 BCDL: 10.00 Des Ld: 40.00 NCBCLL: 10.00 Soffit: 2.00 Load Duration: 1.25 Spacing: 24.0 "	Wind Std: ASCE 7-10 Speed: 130 mph Enclosure: Closed Risk Category: II EXP: C Mean Height: 20.40 ft TCDL: 5.0 psf BCDL: 5.0 psf MWFRS Parallel Dist: h/2 to h C&C Dist a: 3.00 ft Loc. from endwall: not in 9.00 ft GCpi: 0.18 Wind Duration: 1.60	Pg: NA Ct: NA CAT: NA Pf: NA Ce: NA Lu: NA Cs: NA Snow Duration: NA **Code / Misc Criteria** Bldg Code: FBC 2014 RES TPI Std: 2007 Rep Factors Used: Yes FT/RT:20(0)/10(0) Plate Type(s): WAVE	PP Deflection in loc L/defl L/# VERT(LL): 0.020 C 999 240 VERT(TL): 0.050 C 999 180 HORZ(LL): 0.018 F - - HORZ(TL): 0.046 F - - Creep Factor: 1.5 Max TC CSI: 0.126 Max BC CSI: 0.113 Max Web CSI: 0.201 VIEW Ver: 16.01.00D.0413.17

▲ Maximum Reactions (lbs)

Loc	R	/ U	/ Rw	/ Rh	/ RL	/ W
J	759	/ 204	/ 389	/ -	/ -	/ 3.5
F	759	/ 204	/ 389	/ -	/ -	/ 3.5

Wind reactions based on MWFRS
J Min Brg Width Req = 1.5
F Min Brg Width Req = 1.5
Bearings J & F are a rigid surface.

Members not listed have forces less than 375#

Maximum Top Chord Forces Per Ply (lbs)

Chords	Tens.	Comp.	Chords	Tens.	Comp.
B - C	150	-571	C - D	150	-571

Maximum Bot Chord Forces Per Ply (lbs)

Chords	Tens.	Comp.	Chords	Tens.	Comp.
I - H	396	-95	H - G	396	-95

Maximum Web Forces Per Ply (lbs)

Webs	Tens.	Comp.	Webs	Tens.	Comp.
A - J	233	-720	H - D	383	-94
A - I	690	-192	D - G	223	-634
I - B	223	-634	G - E	690	-192
B - H	383	-94	E - F	233	-720

Lumber

Top chord 2x4 SP M-31
Bot chord 2x4 SP M-31
Webs 2x4 SP M-31

Bracing

(a) Continuous lateral restraint equally spaced on member.

Wind

Wind loads based on MWFRS with additional C&C member design.

End verticals not exposed to wind pressure.

DOUGLAS FLEMING
LICENSE
No. 66648
STATE OF
FLORIDA
PROFESSIONAL ENGINEER

#0 278
04/14/2017

****WARNING**** READ AND FOLLOW ALL NOTES ON THIS DRAWING!
****IMPORTANT**** FURNISH THIS DRAWING TO ALL CONTRACTORS INCLUDING THE INSTALLERS

Trusses require extreme care in fabricating, handling, shipping, installing and bracing. Refer to and follow the latest edition of BCSI (Building Component Safety Information, by TPI and SBCA) for safety practices prior to performing these functions. Installers shall provide temporary bracing per BCSI. Unless noted otherwise,top chord shall have properly attached structural sheathing and bottom chord shall have a properly attached rigid ceiling. Locations shown for permanent lateral restraint of webs shall have bracing installed per BCSI sections B3, B7, or B10, as applicable. Apply plates to each face of truss and position as shown above and on the Joint Details, unless noted otherwise. Refer to drawings 160A-Z for standard plate positions.

Alpine, a division of ITW Building Components Group Inc. shall not be responsible for any deviation from this drawing,any failure to build the truss in conformance with ANSI/TPI 1, or for handling, shipping, installation and bracing of trusses**A seal on this drawing or cover page listing this drawing, indicates acceptance of professional engineering responsibility solely for the design shown. The suitability and use of this drawing for any structure is the responsibility of the Building Designer per ANSI/TPI 1 Sec.2.**

For more information see this job's general notes page and these web sites: ALPINE: www.alpineitw.com; TPI: www.tpinst.org; SBCA: www.sbcindustry.com; ICC: www.iccsafe.org

ALPINE™ AN ITW COMPANY
2400 Lake Orange Dr.
Suite 150
Orlando FL, 32837

Job Number: 16-0982 HUBBART RESIDENCE **Truss Label:** C08	Ply: 1 Qty: 3	SEQN: 468285 / T31 FLAT FROM: CDM	Cust: R215 JRef: 1VZZ2150001 DrwNo: 104.17.1304.05340 KM / DF 04/14/2017

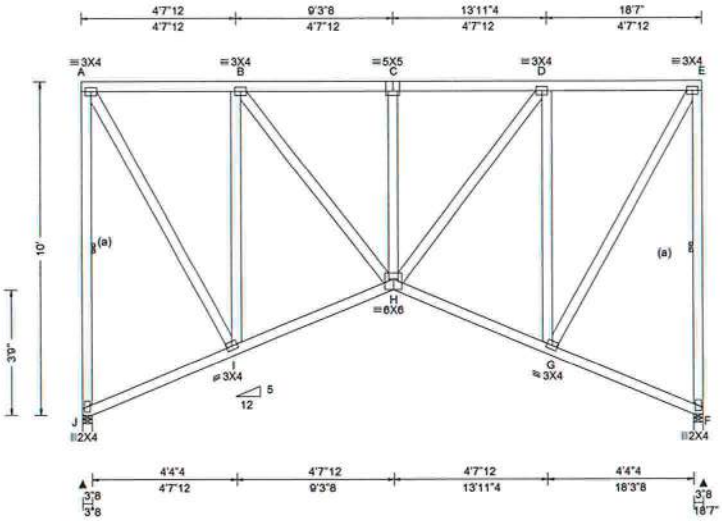

Loading Criteria (psf)

TCLL:	20.00
TCDL:	10.00
BCLL:	0.00
BCDL:	10.00
Des Ld:	40.00
NCBCLL:	10.00
Soffit:	2.00

Load Duration: 1.25
Spacing: 24.0 "

Wind Criteria
Wind Std: ASCE 7-10
Speed: 130 mph
Enclosure: Closed
Risk Category: II
EXP: C
Mean Height: 20.00 ft
TCDL: 5.0 psf
BCDL: 5.0 psf
MWFRS Parallel Dist: h/2 to h
C&C Dist a: 3.00 ft
Loc. from endwall: not in 9.00 ft
GCpi: 0.18
Wind Duration: 1.60

Snow Criteria (Pg,Pf in PSF)
Pg: NA Ct: NA CAT: NA
Pf: NA Ce: NA
Lu: NA Cs: NA
Snow Duration: NA

Code / Misc Criteria
Bldg Code: FBC 2014 RES
TPI Std: 2007
Rep Factors Used: Yes
FT/RT:20(0)/10(0)
Plate Type(s):
WAVE

Defl/CSI Criteria

PP Deflection in	loc	L/defl	L/#
VERT(LL): 0.020	C	999	240
VERT(TL): 0.051	C	999	180
HORZ(LL): 0.018	F	-	-
HORZ(TL): 0.047	F	-	-

Creep Factor: 1.5
Max TC CSI: 0.126
Max BC CSI: 0.115
Max Web CSI: 0.409

VIEW Ver: 16.02.01B.0131.17

▲ Maximum Reactions (lbs)

Loc	R	/ U	/ Rw	/ Rh	/ RL	/ W
J	759	/ 199	/ 389	/ -	/ -	/ 3.5
F	759	/ 199	/ 389	/ -	/ -	/ 3.5

Wind reactions based on MWFRS
J Min Brg Width Req = 1.5
F Min Brg Width Req = 1.5
Bearings J & F are a rigid surface.

Members not listed have forces less than 375#

Maximum Top Chord Forces Per Ply (lbs)

Chords	Tens.	Comp.	Chords	Tens.	Comp.
B - C	159	-609	C - D	159	-609

Maximum Bot Chord Forces Per Ply (lbs)

Chords	Tens.	Comp.	Chords	Tens.	Comp.
I - H	415	-100	H - G	415	-100

Maximum Web Forces Per Ply (lbs)

Webs	Tens.	Comp.	Webs	Tens.	Comp.
A - J	232	-720	H - D	401	-98
A - I	698	-193	D - G	223	-641
I - B	223	-641	G - E	698	-193
B - H	401	-98	E - F	232	-720

Lumber

Top chord 2x4 SP M-31
Bot chord 2x4 SP M-31
Webs 2x4 SP M-31

Bracing

(a) Continuous lateral restraint equally spaced on member.

Wind

Wind loads based on MWFRS with additional C&C member design.

End verticals not exposed to wind pressure.

04/14/2017

****WARNING**** READ AND FOLLOW ALL NOTES ON THIS DRAWING!
****IMPORTANT**** FURNISH THIS DRAWING TO ALL CONTRACTORS INCLUDING THE INSTALLERS

Trusses require extreme care in fabricating, handling, shipping, installing and bracing. Refer to and follow the latest edition of BCSI (Building Component Safety Information, by TPI and SBCA) for safety practices prior to performing these functions. Installers shall provide temporary bracing per BCSI. Unless noted otherwise,top chord shall have properly attached structural sheathing and bottom chord shall have a properly attached rigid ceiling. Locations shown for permanent lateral restraint of webs shall have bracing installed per BCSI sections B3, B7, or B10, as applicable. Apply plates to each face of truss and position as shown above and on the Joint Details, unless noted otherwise. Refer to drawings 160A-Z for standard plate positions.

Alpine, a division of ITW Building Components Group Inc. shall not be responsible for any deviation from this drawing,any failure to build the truss in conformance with ANSI/TPI 1, or for handling, shipping, installation and bracing of trusses**A seal on this drawing or cover page listing this drawing, indicates acceptance of professional engineering responsibility solely for the design shown. The suitability and use of this drawing for any structure is the responsibility of the Building Designer per ANSI/TPI 1 Sec.2.**

For more information see this job's general notes page and these web sites: ALPINE: www.alpineitw.com; TPI: www.tpinst.org; SBCA: www.sbcindustry.com; ICC: www.iccsafe.org

ALPINE
AN ITW COMPANY
2400 Lake Orange Dr.
Suite 150
Orlando FL, 32837

Job Number: 16-0982 HUBBART RESIDENCE **Truss Label:** C09	Ply: 1 Qty: 1	SEQN: 468288 / T8 COMN FROM: CDM	Cust: R215 JRef: 1VZZ2150001 DrwNo: 104.17.1304.06860 KM / DF 04/14/2017

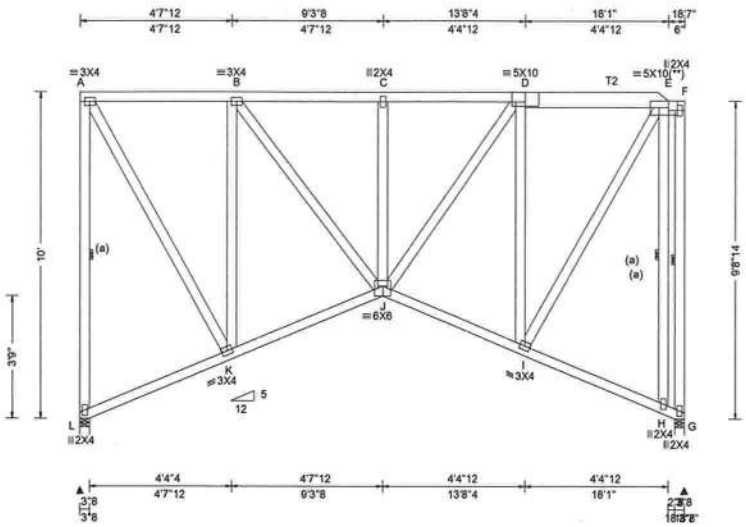

Loading Criteria (psf)

TCLL:	20.00
TCDL:	10.00
BCLL:	0.00
BCDL:	10.00
Des Ld:	40.00
NCBCLL:	10.00
Soffit:	2.00

Load Duration: 1.25
Spacing: 24.0 "

Wind Criteria
Wind Std: ASCE 7-10
Speed: 130 mph
Enclosure: Closed
Risk Category: II
EXP: C
Mean Height: 19.87 ft
TCDL: 5.0 psf
BCDL: 5.0 psf
MWFRS Parallel Dist: h to 2h
C&C Dist a: 3.00 ft
Loc. from endwall: not in 9.00 ft
GCpi: 0.18
Wind Duration: 1.60

Snow Criteria (Pg,Pf in PSF)
Pg: NA Ct: NA CAT: NA
Pf: NA Ce: NA
Lu: NA Cs: NA
Snow Duration: NA

Code / Misc Criteria
Bldg Code: FBC 2014 RES
TPI Std: 2007
Rep Factors Used: Yes
FT/RT:20(0)/10(0)
Plate Type(s):
WAVE

Defl/CSI Criteria

PP Deflection in	loc	L/defl	L/#
VERT(LL): 0.027	C	999	240
VERT(TL): 0.070	C	999	180
HORZ(LL): 0.025	G	-	-
HORZ(TL): 0.063	G	-	-

Creep Factor: 1.5
Max TC CSI: 0.195
Max BC CSI: 0.125
Max Web CSI: 0.407

VIEW Ver: 16.02.01B.0131.17

▲ Maximum Reactions (lbs)

Loc	R	/ U	/ Rw	/ Rh	/ RL	/ W
L	758	/ 197	/ 389	/ -	/ -	/ 3.5
G	741	/ 170	/ 394	/ -	/ -	/ 3.5

Wind reactions based on MWFRS
L Min Brg Width Req = 1.5
G Min Brg Width Req = 1.5
Bearings L & G are a rigid surface.

Members not listed have forces less than 375#

Maximum Top Chord Forces Per Ply (lbs)

Chords	Tens.	Comp.	Chords	Tens.	Comp.
B - C	160	-608	D - E	107	-382
C - D	160	-609			

Maximum Bot Chord Forces Per Ply (lbs)

Chords	Tens.	Comp.	Chords	Tens.	Comp.
K - J	414	-99	J - I	420	-99

Maximum Web Forces Per Ply (lbs)

Webs	Tens.	Comp.	Webs	Tens.	Comp.
A - L	231	-720	J - D	388	-97
A - K	697	-192	I - D	223	-656
K - B	222	-637	I - E	762	-214
B - J	399	-99	F - G	135	-527

Lumber

Top chord 2x4 SP M-31 :T2 2x6 SP M-31:
Bot chord 2x4 SP M-31
Webs 2x4 SP M-31

Bracing

(a) Continuous lateral restraint equally spaced on member.

Plating Notes

(**) 1 plate(s) require special positioning. Refer to scaled plate plot details for special positioning requirements.

Wind

Wind loads based on MWFRS with additional C&C member design.

End verticals not exposed to wind pressure.

#0 278

04/14/2017

****WARNING**** READ AND FOLLOW ALL NOTES ON THIS DRAWING!
****IMPORTANT**** FURNISH THIS DRAWING TO ALL CONTRACTORS INCLUDING THE INSTALLERS

Trusses require extreme care in fabricating, handling, shipping, installing and bracing. Refer to and follow the latest edition of BCSI (Building Component Safety Information, by TPI and SBCA) for safety practices prior to performing these functions. Installers shall provide temporary bracing per BCSI. Unless noted otherwise,top chord shall have properly attached structural sheathing and bottom chord shall have a properly attached rigid ceiling. Locations shown for permanent lateral restraint of webs shall have bracing installed per BCSI sections B3, B7, or B10, as applicable. Apply plates to each face of truss and position as shown above and on the Joint Details, unless noted otherwise. Refer to drawings 160A-Z for standard plate positions.

Alpine, a division of ITW Building Components Group Inc. shall not be responsible for any deviation from this drawing,any failure to build the truss in conformance with ANSI/TPI 1, or for handling, shipping, installation and bracing of trusses**A seal on this drawing or cover page listing this drawing, indicates acceptance of professional engineering responsibility solely for the design shown. The suitability and use of this drawing for any structure is the responsibility of the Building Designer per ANSI/TPI 1 Sec.2.**

For more information see this job's general notes page and these web sites: ALPINE: www.alpineitw.com; TPI: www.tplnst.org; SBCA: www.sbcindustry.com; ICC: www.iccsafe.org

ALPINE
AN ITW COMPANY
2400 Lake Orange Dr.
Suite 150
Orlando FL, 32837

Job Number: 16-0982 HUBBART RESIDENCE **Truss Label:** C10	Ply: 1 Qty: 1	SEQN: 468291 / T60 COMN FROM: CDM	Cust: R215 JRef: 1VZZ2150001 DrwNo: 104.17.1304.10340 KM / DF 04/14/2017

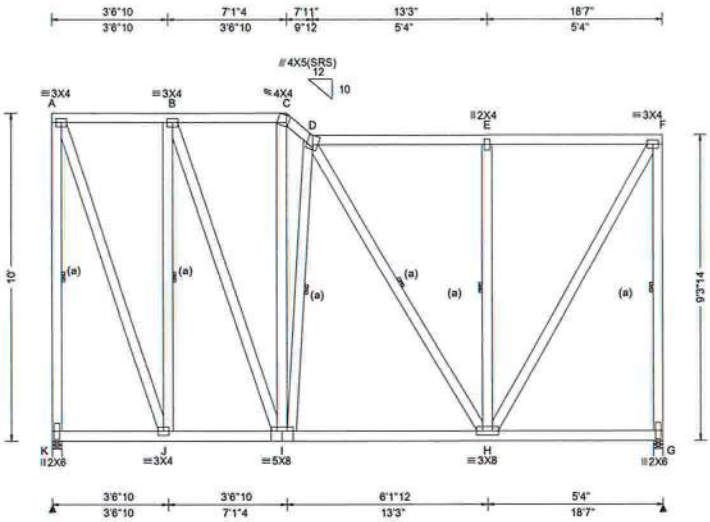

Loading Criteria (psf)

TCLL:	20.00
TCDL:	10.00
BCLL:	0.00
BCDL:	10.00
Des Ld:	40.00
NCBCLL:	10.00
Soffit:	2.00

Load Duration: 1.25
Spacing: 24.0 "

Wind Criteria
Wind Std: ASCE 7-10
Speed: 130 mph
Enclosure: Closed
Risk Category: II
EXP: C
Mean Height: 19.66 ft
TCDL: 5.0 psf
BCDL: 5.0 psf
MWFRS Parallel Dist: h/2 to h
C&C Dist a: 3.00 ft
Loc. from endwall: not in 9.00 ft
GCpi: 0.18
Wind Duration: 1.60

Snow Criteria (Pg,Pf in PSF)
Pg: NA Ct: NA CAT: NA
Pf: NA Ce: NA
Lu: NA Cs: NA
Snow Duration: NA

Code / Misc Criteria
Bldg Code: FBC 2014 RES
TPI Std: 2007
Rep Factors Used: Yes
FT/RT:20(0)/10(0)
Plate Type(s):
WAVE

Defl/CSI Criteria

PP Deflection in	loc	L/defl	L/#
VERT(LL): 0.016	D	999	240
VERT(TL): 0.044	D	999	180
HORZ(LL): -0.005	F	-	-
HORZ(TL): -0.014	F	-	-

Creep Factor: 1.5
Max TC CSI: 0.161
Max BC CSI: 0.165
Max Web CSI: 0.235

VIEW Ver: 16.02.01B.0131.17

▲ Maximum Reactions (lbs)

Loc	R	/ U	/ Rw	/ Rh	/ RL	/ W
K	799	/ 198	/ 395	/ -	/ 17	/ 3.5
G	799	/ 189	/ 386	/ -	/ -	/ 3.5

Wind reactions based on MWFRS
K Min Brg Width Req = 1.5
G Min Brg Width Req = 1.5
Bearings K & G are a rigid surface.

Members not listed have forces less than 375#

Maximum Top Chord Forces Per Ply (lbs)

Chords	Tens.	Comp.
C - D	148	-503

Maximum Bot Chord Forces Per Ply (lbs)

Chords	Tens.	Comp.
I - H	409	-108

Maximum Web Forces Per Ply (lbs)

Webs	Tens.	Comp.	Webs	Tens.	Comp.
A - K	260	-769	E - H	172	-418
A - J	710	-221	H - F	722	-193
J - B	219	-604	F - G	233	-759
I - D	174	-431			

Lumber
Top chord 2x4 SP M-31
Bot chord 2x4 SP M-31
Webs 2x4 SP M-31

Bracing
(a) Continuous lateral restraint equally spaced on member.

Purlins
In lieu of structural panels use purlins to brace all flat TC @ 24" oc.

Wind
Wind loads based on MWFRS with additional C&C member design.
End verticals not exposed to wind pressure.

DOUGLAS FLEMING
LICENSE
No. 66648
STATE OF
FLORIDA
PROFESSIONAL ENGINEER
#0 278

04/14/2017

****WARNING**** READ AND FOLLOW ALL NOTES ON THIS DRAWING!
****IMPORTANT**** FURNISH THIS DRAWING TO ALL CONTRACTORS INCLUDING THE INSTALLERS

Trusses require extreme care in fabricating, handling, shipping, installing and bracing. Refer to and follow the latest edition of BCSI (Building Component Safety Information, by TPI and SBCA) for safety practices prior to performing these functions. Installers shall provide temporary bracing per BCSI. Unless noted otherwise,top chord shall have properly attached structural sheathing and bottom chord shall have a properly attached rigid ceiling. Locations shown for permanent lateral restraint of webs shall have bracing installed per BCSI sections B3, B7, or B10, as applicable. Apply plates to each face of truss and position as shown above and on the Joint Details, unless noted otherwise. Refer to drawings 160A-Z for standard plate positions.

Alpine, a division of ITW Building Components Group Inc. shall not be responsible for any deviation from this drawing,any failure to build the truss in conformance with ANSI/TPI 1, or for handling, shipping, installation and bracing of trusses**A seal on this drawing or cover page listing this drawing, indicates acceptance of professional engineering responsibility solely for the design shown. The suitability and use of this drawing for any structure is the responsibility of the Building Designer per ANSI/TPI 1 Sec.2.**

For more information see this job's general notes page and these web sites: ALPINE: www.alpineitw.com; TPI: www.tpinst.org; SBCA: www.sbcindustry.com; ICC: www.iccsafe.org

ALPINE
AN ITW COMPANY
2400 Lake Orange Dr.
Suite 150
Orlando FL, 32837

Job Number: 16-0982 HUBBART RESIDENCE **Truss Label:** C11	Ply: 1 Qty: 1	SEQN: 468294 / T82 COMN FROM: CDM	Cust: R215 JRef: 1VZZ2150001 DrwNo: 104.17.1304.11487 KM / DF 04/14/2017

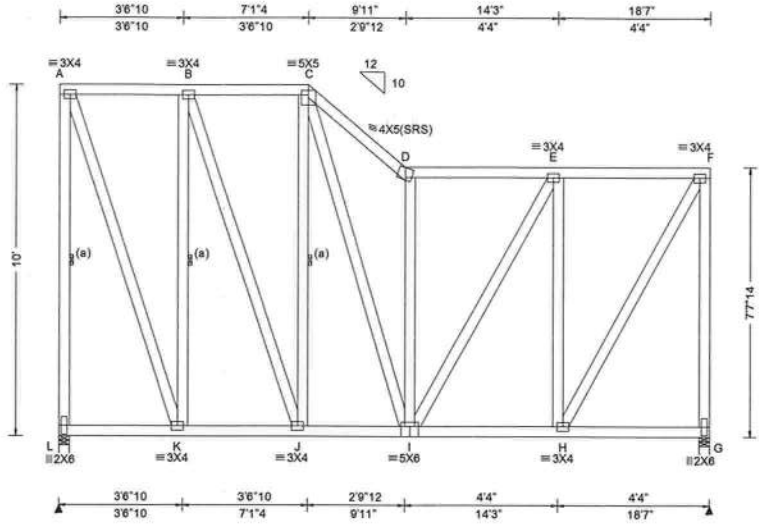

Loading Criteria (psf)

TCLL:	20.00
TCDL:	10.00
BCLL:	0.00
BCDL:	10.00
Des Ld:	40.00
NCBCLL:	10.00
Soffit:	2.00

Load Duration: 1.25
Spacing: 24.0 "

Wind Criteria
Wind Std: ASCE 7-10
Speed: 130 mph
Enclosure: Closed
Risk Category: II
EXP: C
Mean Height: 18.83 ft
TCDL: 5.0 psf
BCDL: 5.0 psf
MWFRS Parallel Dist: h/2 to h
C&C Dist a: 3.00 ft
Loc. from endwall: not in 9.00 ft
GCpi: 0.18
Wind Duration: 1.60

Snow Criteria (Pg,Pf in PSF)
Pg: NA Ct: NA CAT: NA
Pf: NA Ce: NA
Lu: NA Cs: NA
Snow Duration: NA

Code / Misc Criteria
Bldg Code: FBC 2014 RES
TPI Std: 2007
Rep Factors Used: Yes
FT/RT:20(0)/10(0)
Plate Type(s):
WAVE

Defl/CSI Criteria

PP Deflection in	loc	L/defl	L/#
VERT(LL): 0.023	D	999	240
VERT(TL): 0.063	D	999	180
HORZ(LL): -0.007	F	-	-
HORZ(TL): -0.019	F	-	-

Creep Factor: 1.5
Max TC CSI: 0.110
Max BC CSI: 0.102
Max Web CSI: 0.421

VIEW Ver: 16.02.01B.0131.17

▲ Maximum Reactions (lbs)

Loc	R	/ U	/ Rw	/ Rh	/ RL	/ W
L	799	/ 176	/ 427	/ -	/ 64	/ 3.5
G	799	/ 138	/ 399	/ -	/ -	/ 3.5

Wind reactions based on MWFRS
L Min Brg Width Req = 1.5
G Min Brg Width Req = 1.5
Bearings L & G are a rigid surface.

Members not listed have forces less than 375#

Maximum Top Chord Forces Per Ply (lbs)

Chords	Tens.	Comp.	Chords	Tens.	Comp.
C - D	203	-730	D - E	99	-506

Maximum Bot Chord Forces Per Ply (lbs)

Chords	Tens.	Comp.
I - H	391	-88

Maximum Web Forces Per Ply (lbs)

Webs	Tens.	Comp.	Webs	Tens.	Comp.
A - L	284	-771	D - I	218	-634
A - K	712	-248	E - H	157	-549
K - B	247	-599	H - F	748	-166
C - I	514	-194	F - G	200	-767

Lumber
Top chord 2x4 SP M-31
Bot chord 2x4 SP M-31
Webs 2x4 SP M-31

Bracing
(a) Continuous lateral restraint equally spaced on member.

Purlins
In lieu of structural panels use purlins to brace all flat TC @ 24" oc.

Wind
Wind loads based on MWFRS with additional C&C member design.
End verticals not exposed to wind pressure.

DOUGLAS FLEMING
LICENSE
No. 66648
STATE OF
FLORIDA
PROFESSIONAL ENGINEER
#0 278

04/14/2017

****WARNING**** READ AND FOLLOW ALL NOTES ON THIS DRAWING!
****IMPORTANT**** FURNISH THIS DRAWING TO ALL CONTRACTORS INCLUDING THE INSTALLERS

Trusses require extreme care in fabricating, handling, shipping, installing and bracing. Refer to and follow the latest edition of BCSI (Building Component Safety Information, by TPI and SBCA) for safety practices prior to performing these functions. Installers shall provide temporary bracing per BCSI. Unless noted otherwise,top chord shall have properly attached structural sheathing and bottom chord shall have a properly attached rigid ceiling. Locations shown for permanent lateral restraint of webs shall have bracing installed per BCSI sections B3, B7, or B10, as applicable. Apply plates to each face of truss and position as shown above and on the Joint Details, unless noted otherwise. Refer to drawings 160A-Z for standard plate positions.

Alpine, a division of ITW Building Components Group Inc. shall not be responsible for any deviation from this drawing,any failure to build the truss in conformance with ANSI/TPI 1, or for handling, shipping, installation and bracing of trusses**A seal on this drawing or cover page listing this drawing, indicates acceptance of professional engineering responsibility solely for the design shown. The suitability and use of this drawing for any structure is the responsibility of the Building Designer per ANSI/TPI 1 Sec.2.**

For more information see this job's general notes page and these web sites: ALPINE: www.alpineitw.com; TPI: www.tpinst.org; SBCA: www.sbcindustry.com; ICC: www.iccsafe.org

ALPINE
AN ITW COMPANY
2400 Lake Orange Dr.
Suite 150
Orlando FL, 32837

Job Number: 16-0982 HUBBART RESIDENCE **Truss Label:** C12	Ply: 1 Qty: 1	SEQN: 468297 / T45 COMN FROM: CDM	Cust: R215 JRef: 1VZZ2150001 DrwNo: 104.17.1304.12583 KM / DF 04/14/2017

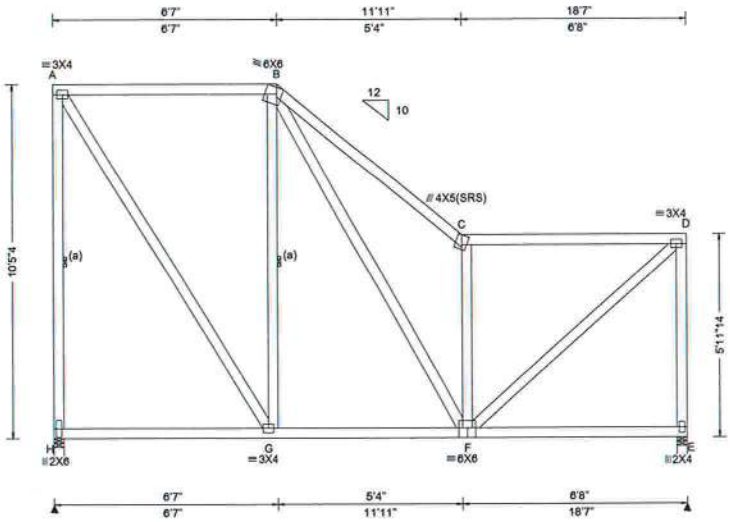

Loading Criteria (psf)
TCLL: 20.00
TCDL: 10.00
BCLL: 0.00
BCDL: 10.00
Des Ld: 40.00
NCBCLL: 10.00
Soffit: 2.00
Load Duration: 1.25
Spacing: 24.0 "

Wind Criteria
Wind Std: ASCE 7-10
Speed: 130 mph
Enclosure: Closed
Risk Category: II
EXP: C
Mean Height: 18.21 ft
TCDL: 5.0 psf
BCDL: 5.0 psf
MWFRS Parallel Dist: h/2 to h
C&C Dist a: 3.00 ft
Loc. from endwall: not in 9.00 ft
GCpi: 0.18
Wind Duration: 1.60

Snow Criteria (Pg,Pf in PSF)
Pg: NA Ct: NA CAT: NA
Pf: NA Ce: NA
Lu: NA Cs: NA
Snow Duration: NA

Code / Misc Criteria
Bldg Code: FBC 2014 RES
TPI Std: 2007
Rep Factors Used: Yes
FT/RT:20(0)/10(0)
Plate Type(s):
WAVE

Defl/CSI Criteria

PP Deflection in	loc	L/defl	L/#
VERT(LL): 0.025	C	999	240
VERT(TL): 0.069	C	999	180
HORZ(LL): -0.010	D	-	-
HORZ(TL): -0.029	D	-	-

Creep Factor: 1.5
Max TC CSI: 0.293
Max BC CSI: 0.167
Max Web CSI: 0.370

VIEW Ver: 16.02.01B.0131.17

▲ Maximum Reactions (lbs)

Loc	R	/ U	/ Rw	/ Rh	/ RL	/ W
H	799	/ 188	/ 463	/ -	/ 124	/ 3.5
E	799	/ 86	/ 421	/ -	/ -	/ 3.5

Wind reactions based on MWFRS
H Min Brg Width Req = 1.5
E Min Brg Width Req = 1.5
Bearings H & E are a rigid surface.

Members not listed have forces less than 375#

Maximum Top Chord Forces Per Ply (lbs)

Chords	Tens.	Comp.	Chords	Tens.	Comp.
B - C	263	-971	C - D	96	-636

Maximum Web Forces Per Ply (lbs)

Webs	Tens.	Comp.	Webs	Tens.	Comp.
A - H	302	-748	C - F	322	-976
A - G	664	-258	F - D	844	-127
G - B	238	-429	D - E	168	-743
B - F	626	-247			

Lumber
Top chord 2x4 SP M-31
Bot chord 2x4 SP M-31
Webs 2x4 SP M-31

Bracing
(a) Continuous lateral restraint equally spaced on member.

Purlins
In lieu of structural panels use purlins to brace all flat TC @ 24" oc.

Wind
Wind loads based on MWFRS with additional C&C member design.
End verticals not exposed to wind pressure.

DOUGLAS FLEMING
LICENSE
No. 66648
STATE OF
FLORIDA
PROFESSIONAL ENGINEER

#0 278

04/14/2017

****WARNING**** READ AND FOLLOW ALL NOTES ON THIS DRAWING!
****IMPORTANT**** FURNISH THIS DRAWING TO ALL CONTRACTORS INCLUDING THE INSTALLERS

Trusses require extreme care in fabricating, handling, shipping, installing and bracing. Refer to and follow the latest edition of BCSI (Building Component Safety Information, by TPI and SBCA) for safety practices prior to performing these functions. Installers shall provide temporary bracing per BCSI. Unless noted otherwise,top chord shall have properly attached structural sheathing and bottom chord shall have a properly attached rigid ceiling. Locations shown for permanent lateral restraint of webs shall have bracing installed per BCSI sections B3, B7, or B10, as applicable. Apply plates to each face of truss and position as shown above and on the Joint Details, unless noted otherwise. Refer to drawings 160A-Z for standard plate positions.

Alpine, a division of ITW Building Components Group Inc. shall not be responsible for any deviation from this drawing,any failure to build the truss in conformance with ANSI/TPI 1, or for handling, shipping, installation and bracing of trusses**A seal on this drawing or cover page listing this drawing, indicates acceptance of professional engineering responsibility solely for the design shown. The suitability and use of this drawing for any structure is the responsibility of the Building Designer per ANSI/TPI 1 Sec.2.**

For more information see this job's general notes page and these web sites: ALPINE: www.alpineitw.com; TPI: www.tpinst.org; SBCA: www.sbcindustry.com; ICC: www.iccsafe.org

ALPINE
AN ITW COMPANY
2400 Lake Orange Dr.
Suite 150
Orlando FL, 32837

Job Number: 16-0982 HUBBART RESIDENCE **Truss Label:** C13	Ply: 1 Qty: 1	SEQN: 455381 / T80 COMN FROM: CDM	Cust: R215 JRef: 1VZZ2150001 DrwNo: 104.17.1304.13883 KM / DF 04/14/2017

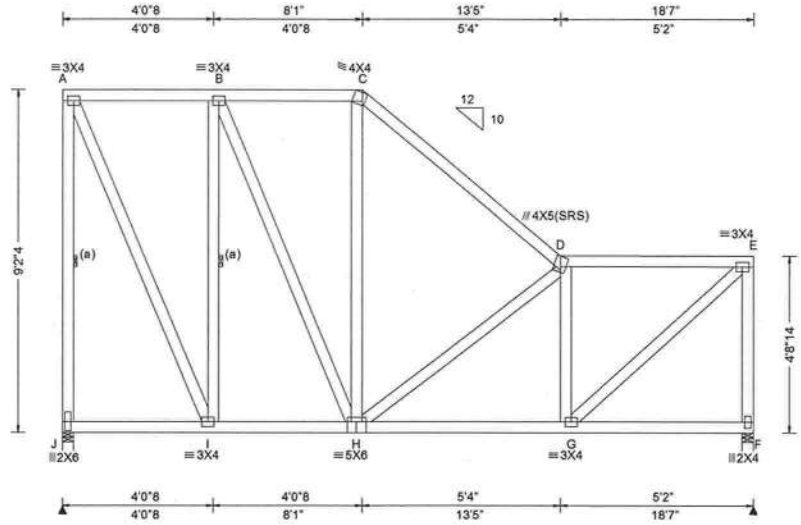

Loading Criteria (psf)

TCLL:	20.00
TCDL:	10.00
BCLL:	0.00
BCDL:	10.00
Des Ld:	40.00
NCBCLL:	10.00
Soffit:	2.00

Load Duration: 1.25
Spacing: 24.0 "

Wind Criteria
Wind Std: ASCE 7-10
Speed: 130 mph
Enclosure: Closed
Risk Category: II
EXP: C
Mean Height: 16.96 ft
TCDL: 5.0 psf
BCDL: 5.0 psf
MWFRS Parallel Dist: h/2 to h
C&C Dist a: 3.00 ft
Loc. from endwall: not in 9.00 ft
GCpi: 0.18
Wind Duration: 1.60

Snow Criteria (Pg,Pf in PSF)
Pg: NA Ct: NA CAT: NA
Pf: NA Ce: NA
Lu: NA Cs: NA
Snow Duration: NA

Code / Misc Criteria
Bldg Code: FBC 2014 RES
TPI Std: 2007
Rep Factors Used: Yes
FT/RT:20(0)/10(0)
Plate Type(s):
WAVE

Defl/CSI Criteria

PP Deflection in	loc	L/defl	L/#
VERT(LL): 0.015	D	999	240
VERT(TL): 0.042	D	999	180
HORZ(LL): 0.004	A	-	-
HORZ(TL): 0.010	A	-	-

Creep Factor: 1.5
Max TC CSI: 0.156
Max BC CSI: 0.162
Max Web CSI: 0.231

VIEW Ver: 16.01.00D.0413.17

▲ Maximum Reactions (lbs)

Loc	R	/ U	/ Rw	/ Rh	/ RL	/ W
J	799	/ 181	/ 450	/ -	/ 125	/ 3.5
F	799	/ 88	/ 434	/ -	/ -	/ 3.5

Wind reactions based on MWFRS
J Min Brg Width Req = 1.5
F Min Brg Width Req = 1.5
Bearings J & F are a rigid surface.

Members not listed have forces less than 375#

Maximum Top Chord Forces Per Ply (lbs)

Chords	Tens.	Comp.	Chords	Tens.	Comp.
B - C	162	- 424	D - E	123	- 685
C - D	141	- 670			

Maximum Bot Chord Forces Per Ply (lbs)

Chords	Tens.	Comp.
H - G	718	- 131

Maximum Web Forces Per Ply (lbs)

Webs	Tens.	Comp.	Webs	Tens.	Comp.
A - J	281	- 767	D - G	131	- 506
A - I	713	- 246	G - E	927	- 165
I - B	238	- 571	E - F	172	- 761
H - D	157	- 379			

Lumber

Top chord 2x4 SP M-31
Bot chord 2x4 SP M-31
Webs 2x4 SP M-31

Bracing

(a) Continuous lateral restraint equally spaced on member.

Purlins

In lieu of structural panels use purlins to brace all flat TC @ 24" oc.

Wind

Wind loads based on MWFRS with additional C&C member design.

End verticals not exposed to wind pressure.

DOUGLAS FLEMING
LICENSE
No. 66648
STATE OF
FLORIDA
PROFESSIONAL ENGINEER

#0 278

04/14/2017

****WARNING**** READ AND FOLLOW ALL NOTES ON THIS DRAWING!
****IMPORTANT**** FURNISH THIS DRAWING TO ALL CONTRACTORS INCLUDING THE INSTALLERS

Trusses require extreme care in fabricating, handling, shipping, installing and bracing. Refer to and follow the latest edition of BCSI (Building Component Safety Information, by TPI and SBCA) for safety practices prior to performing these functions. Installers shall provide temporary bracing per BCSI. Unless noted otherwise,top chord shall have properly attached structural sheathing and bottom chord shall have a properly attached rigid ceiling. Locations shown for permanent lateral restraint of webs shall have bracing installed per BCSI sections B3, B7, or B10, as applicable. Apply plates to each face of truss and position as shown above and on the Joint Details, unless noted otherwise. Refer to drawings 160A-Z for standard plate positions.

Alpine, a division of ITW Building Components Group Inc. shall not be responsible for any deviation from this drawing,any failure to build the truss in conformance with ANSI/TPI 1, or for handling, shipping, installation and bracing of trusses**A seal on this drawing or cover page listing this drawing, indicates acceptance of professional engineering responsibility solely for the design shown. The suitability and use of this drawing for any structure is the responsibility of the Building Designer per ANSI/TPI 1 Sec.2.**

For more information see this job's general notes page and these web sites: ALPINE: www.alpineitw.com; TPI: www.tpinst.org; SBCA: www.sbcindustry.com; ICC: www.iccsafe.org

ALPINE™ AN ITW COMPANY
2400 Lake Orange Dr.
Suite 150
Orlando FL, 32837

Job Number: 16-0982 HUBBART RESIDENCE **Truss Label:** D01	Ply: 1 Qty: 1	SEQN: 462438 / T6 GABL FROM: CDM	Cust: R215 JRef: 1VZZ2150001 DrwNo: 104.17.1304.16780 KM / DF 04/14/2017

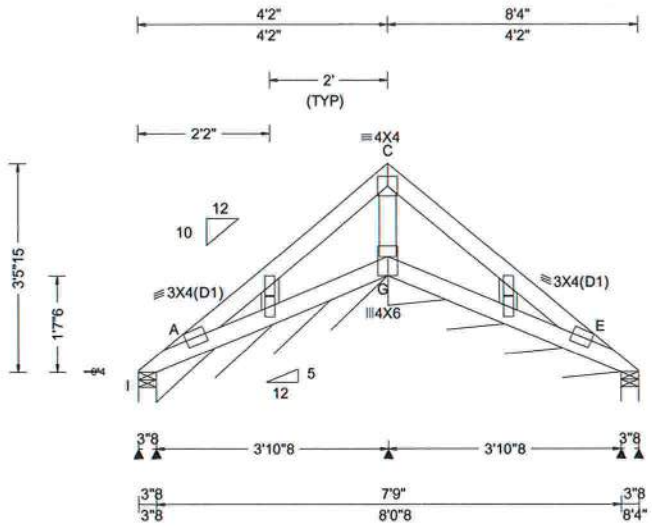

Loading Criteria (psf)
TCLL: 20.00
TCDL: 10.00
BCLL: 0.00
BCDL: 10.00
Des Ld: 40.00
NCBCLL: 10.00
Soffit: 2.00
Load Duration: 1.25
Spacing: 24.0 "

Wind Criteria
Wind Std: ASCE 7-10
Speed: 130 mph
Enclosure: Closed
Risk Category: II
EXP: C
Mean Height: 15.00 ft
TCDL: 5.0 psf
BCDL: 5.0 psf
MWFRS Parallel Dist: 0 to h/2
C&C Dist a: 3.00 ft
Loc. from endwall: Any
GCpi: 0.18
Wind Duration: 1.60

Snow Criteria (Pg,Pf in PSF)
Pg: NA Ct: NA CAT: NA
Pf: NA Ce: NA
Lu: NA Cs: NA
Snow Duration: NA

Code / Misc Criteria
Bldg Code: FBC 2014 RES
TPI Std: 2007
Rep Factors Used: Yes
FT/RT:20(0)/10(0)
Plate Type(s):
WAVE

Defl/CSI Criteria

PP Deflection in	loc	L/defl	L/#
VERT(LL): 0.001	H	999	240
VERT(TL): 0.001	H	999	180
HORZ(LL): -0.000	F	-	-
HORZ(TL): 0.001	H	-	-

Creep Factor: 1.5
Max TC CSI: 0.022
Max BC CSI: 0.015
Max Web CSI: 0.010

VIEW Ver: 16.01.00D.0413.16

▲ Maximum Reactions (lbs), or *=PLF

Loc	R	/ U	/ Rw	/ Rh	/ RL	/ W
I	84	/ 42	/ 84	/ -	/ 89	/ 3.5
I*	92	/ 10	/ 80	/ -	/ -	/ 46.5
G*	50	/ 18	/ 42	/ -	/ -	/ 46.5
E	93	/ 3	/ 41	/ -	/ -	/ 3.5

Wind reactions based on MWFRS
I Min Brg Width Req = 1.5
I Min Brg Width Req = -
G Min Brg Width Req = -
E Min Brg Width Req = 1.5
Bearings I, I, G, & E are a rigid surface.

Members not listed have forces less than 375#

Lumber
Top chord 2x4 SP M-31
Bot chord 2x4 SP M-31
Webs 2x4 SP M-31

Plating Notes
All plates are 2X4 except as noted.

Wind
Wind loads based on MWFRS with additional C&C member design.

Additional Notes
Full Height Blocking reinforcement required to prevent buckling of members over the bearings: bearing 1 located at 0.00'

See DWGS A14015ENC101014 & GBLLETIN1014 for gable wind bracing and other requirements.

Shim all supports to solid bearing.

DOUGLAS FLEMING
LICENSE
No. 66648
STATE OF
FLORIDA
PROFESSIONAL ENGINEER

#0 278

04/14/2017

****WARNING**** READ AND FOLLOW ALL NOTES ON THIS DRAWING!
****IMPORTANT**** FURNISH THIS DRAWING TO ALL CONTRACTORS INCLUDING THE INSTALLERS

Trusses require extreme care in fabricating, handling, shipping, installing and bracing. Refer to and follow the latest edition of BCSI (Building Component Safety Information, by TPI and SBCA) for safety practices prior to performing these functions. Installers shall provide temporary bracing per BCSI. Unless noted otherwise,top chord shall have properly attached structural sheathing and bottom chord shall have a properly attached rigid ceiling. Locations shown for permanent lateral restraint of webs shall have bracing installed per BCSI sections B3, B7, or B10, as applicable. Apply plates to each face of truss and position as shown above and on the Joint Details, unless noted otherwise. Refer to drawings 160A-Z for standard plate positions.

Alpine, a division of ITW Building Components Group Inc. shall not be responsible for any deviation from this drawing,any failure to build the truss in conformance with ANSI/TPI 1, or for handling, shipping, installation and bracing of trusses**A seal on this drawing or cover page listing this drawing, indicates acceptance of professional engineering responsibility solely for the design shown. The suitability and use of this drawing for any structure is the responsibility of the Building Designer per ANSI/TPI 1 Sec.2.**

For more information see this job's general notes page and these web sites: ALPINE: www.alpineitw.com; TPI: www.tpinst.org; SBCA: www.sbcindustry.com; ICC: www.iccsafe.org

ALPINE
AN ITW COMPANY
2400 Lake Orange Dr.
Suite 150
Orlando FL, 32837

Job Number: 16-0982 HUBBART RESIDENCE **Truss Label:** D02	Ply: 1 Qty: 1	SEQN: 468444 / T14 GABL FROM: CDM	Cust: R215 JRef: 1VZZ2150001 DrwNo: 104.17.1304.17923 KM / DF 04/14/2017

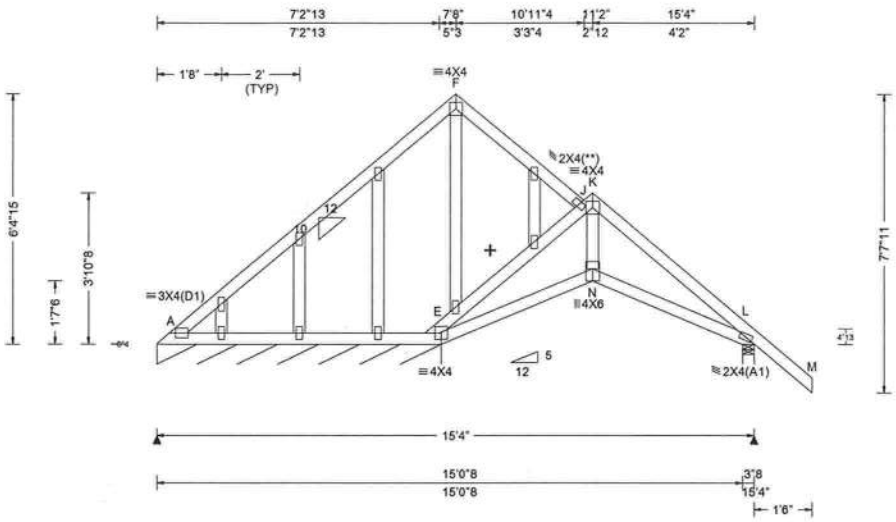

Loading Criteria (psf)	**Wind Criteria**	**Snow Criteria** (Pg,Pf in PSF)	**Defl/CSI Criteria**
TCLL: 20.00 TCDL: 10.00 BCLL: 0.00 BCDL: 10.00 Des Ld: 40.00 NCBCLL: 10.00 Soffit: 2.00 Load Duration: 1.25 Spacing: 24.0 "	Wind Std: ASCE 7-10 Speed: 130 mph Enclosure: Closed Risk Category: II EXP: C Mean Height: 15.00 ft TCDL: 5.0 psf BCDL: 5.0 psf MWFRS Parallel Dist: 0 to h/2 C&C Dist a: 3.00 ft Loc. from endwall: Any GCpi: 0.18 Wind Duration: 1.60	Pg: NA Ct: NA CAT: NA Pf: NA Ce: NA Lu: NA Cs: NA Snow Duration: NA **Code / Misc Criteria** Bldg Code: FBC 2014 RES TPI Std: 2007 Rep Factors Used: Yes FT/RT:20(0)/10(0) Plate Type(s): WAVE	PP Deflection in loc L/defl L/# VERT(LL): 0.011 H 999 240 VERT(TL): 0.028 H 999 180 HORZ(LL): 0.009 H - - HORZ(TL): 0.024 H - - Creep Factor: 1.5 Max TC CSI: 0.078 Max BC CSI: 0.065 Max Web CSI: 0.054 VIEW Ver: 16.02.01B.0131.17

▲ Maximum Reactions (lbs), or *=PLF

Loc	R	/ U	/ Rw	/ Rh	/ RL	/ W
A*	133	/ 16	/ 82	/ -	/ 32	/ 87.5
L	466	/ 72	/ 328	/ -	/ -	/ 3.5

Wind reactions based on MWFRS
A Min Brg Width Req = -
L Min Brg Width Req = 1.5
Bearings A & L are a rigid surface.

Members not listed have forces less than 375#

Maximum Top Chord Forces Per Ply (lbs)

Chords	Tens.	Comp.	Chords	Tens.	Comp.
E - J	64	-599	K - L	12	-531
J - K	9	-385			

Maximum Bot Chord Forces Per Ply (lbs)

Chords	Tens.	Comp.	Chords	Tens.	Comp.
E - N	379	-66	N - L	381	-66

Lumber

Top chord 2x4 SP M-31
Bot chord 2x4 SP M-31
Webs 2x4 SP M-31

Plating Notes

All plates are 2X4 except as noted.

(**) 1 plate(s) require special positioning. Refer to scaled plate plot details for special positioning requirements.

Wind

Wind loads based on MWFRS with additional C&C member design.

Additional Notes

See DWGS A14015ENC101014 & GBLLETIN1014 for gable wind bracing and other requirements.

Laterally brace TC below filler @ 24" O.C. (or as designed) Including a brace on TC directly above both ends of filler (if no rigid diaphragm exists at that point)

+ Member to be laterally braced for horizontal wind load. Bracing system to be designed and furnished by others.

#0 278

04/14/2017

****WARNING**** READ AND FOLLOW ALL NOTES ON THIS DRAWING!
****IMPORTANT**** FURNISH THIS DRAWING TO ALL CONTRACTORS INCLUDING THE INSTALLERS

Trusses require extreme care in fabricating, handling, shipping, installing and bracing. Refer to and follow the latest edition of BCSI (Building Component Safety Information, by TPI and SBCA) for safety practices prior to performing these functions. Installers shall provide temporary bracing per BCSI. Unless noted otherwise,top chord shall have properly attached structural sheathing and bottom chord shall have a properly attached rigid ceiling. Locations shown for permanent lateral restraint of webs shall have bracing installed per BCSI sections B3, B7, or B10, as applicable. Apply plates to each face of truss and position as shown above and on the Joint Details, unless noted otherwise. Refer to drawings 160A-Z for standard plate positions.

Alpine, a division of ITW Building Components Group Inc. shall not be responsible for any deviation from this drawing,any failure to build the truss in conformance with ANSI/TPI 1, or for handling, shipping, installation and bracing of trusses**A seal on this drawing or cover page listing this drawing, indicates acceptance of professional engineering responsibility solely for the design shown. The suitability and use of this drawing for any structure is the responsibility of the Building Designer per ANSI/TPI 1 Sec.2.**

For more information see this job's general notes page and these web sites: ALPINE: www.alpineitw.com; TPI: www.tpinst.org; SBCA: www.sbcindustry.com; ICC: www.iccsafe.org

ALPINE
AN ITW COMPANY
2400 Lake Orange Dr.
Suite 150
Orlando FL, 32837

Job Number: 16-0982 HUBBART RESIDENCE **Truss Label:** D03	Ply: 1 Qty: 1	SEQN: 468446 / T15 COMN FROM: CDM	Cust: R215 JRef: 1VZZ2150001 DrwNo: 104.17.1304.40830 KM / DF 04/14/2017

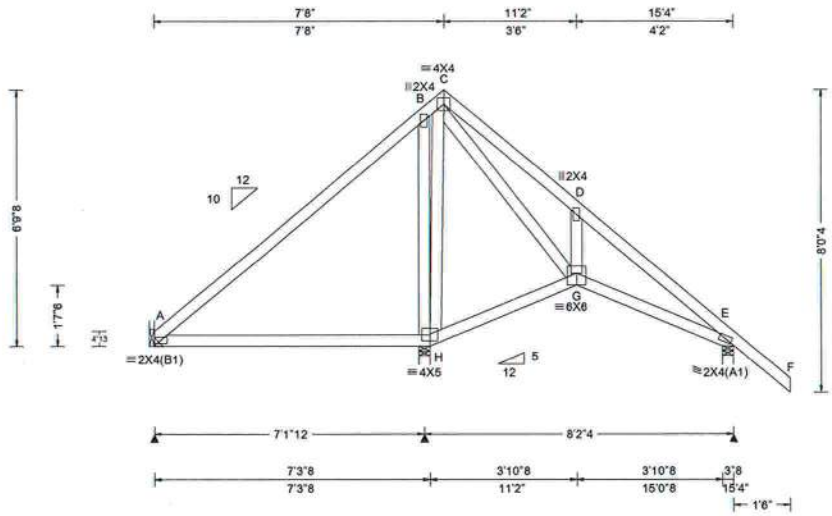

Loading Criteria (psf)

TCLL:	20.00
TCDL:	10.00
BCLL:	0.00
BCDL:	10.00
Des Ld:	40.00
NCBCLL:	10.00
Soffit:	2.00

Load Duration: 1.25
Spacing: 24.0 "

Wind Criteria
Wind Std: ASCE 7-10
Speed: 130 mph
Enclosure: Closed
Risk Category: II
EXP: C
Mean Height: 15.00 ft
TCDL: 5.0 psf
BCDL: 5.0 psf
MWFRS Parallel Dist: 0 to h/2
C&C Dist a: 3.00 ft
Loc. from endwall: Any
GCpi: 0.18
Wind Duration: 1.60

Snow Criteria (Pg,Pf in PSF)
Pg: NA Ct: NA CAT: NA
Pf: NA Ce: NA
Lu: NA Cs: NA
Snow Duration: NA

Code / Misc Criteria
Bldg Code: FBC 2014 RES
TPI Std: 2007
Rep Factors Used: Yes
FT/RT:20(0)/10(0)
Plate Type(s):
WAVE

Defl/CSI Criteria

PP Deflection in	loc	L/defl	L/#
VERT(LL): 0.007	H	999	240
VERT(TL): 0.019	H	999	180
HORZ(LL): 0.008	H	-	-
HORZ(TL): 0.022	H	-	-

Creep Factor: 1.5
Max TC CSI: 0.238
Max BC CSI: 0.166
Max Web CSI: 0.276

VIEW Ver: 16.02.01B.0131.17

▲ Maximum Reactions (lbs)

Loc	R	/ U	/ Rw	/ Rh	/ RL	/ W
A	290	/ 63	/ 144	/ -	/ 237	/ -
H	815	/ 46	/ 479	/ -	/ -	/ 3.5
E	396	/ 93	/ 305	/ -	/ -	/ 3.5

Wind reactions based on MWFRS
A Min Brg Width Req = -
H Min Brg Width Req = 1.5
E Min Brg Width Req = 1.5
Bearings H & E are a rigid surface.

Members not listed have forces less than 375#

Maximum Top Chord Forces Per Ply (lbs)

Chords	Tens.	Comp.
B - C	449	-319

Maximum Web Forces Per Ply (lbs)

Webs	Tens.	Comp.	Webs	Tens.	Comp.
B - H	529	-733	C - G	440	-122
H - C	338	-517			

Lumber
Top chord 2x4 SP M-31
Bot chord 2x4 SP M-31
Webs 2x4 SP M-31

Hangers / Ties
Recommended hanger connections are based on manufacturer tested capacities and calculations. Conditions may exist that require different connections than indicated. Refer to manufacturer publication for additional information.

Bearing at location x=0' uses the following support conditions:
Bearing A (0', 10') LUS26
Supporting Member: (1)2x6 SP M-31
(4) 0.148"x3" nails into supporting member,
(3) 0.148"x3" nails into supported member.

Wind
Wind loads based on MWFRS with additional C&C member design.

Additional Notes
Shim all supports to solid bearing.

DOUGLAS FLEMING
LICENSE
No. 66648
STATE OF
FLORIDA
PROFESSIONAL ENGINEER

#0 278
04/14/2017

****WARNING**** READ AND FOLLOW ALL NOTES ON THIS DRAWING!
****IMPORTANT**** FURNISH THIS DRAWING TO ALL CONTRACTORS INCLUDING THE INSTALLERS

Trusses require extreme care in fabricating, handling, shipping, installing and bracing. Refer to and follow the latest edition of BCSI (Building Component Safety Information, by TPI and SBCA) for safety practices prior to performing these functions. Installers shall provide temporary bracing per BCSI. Unless noted otherwise,top chord shall have properly attached structural sheathing and bottom chord shall have a properly attached rigid ceiling. Locations shown for permanent lateral restraint of webs shall have bracing installed per BCSI sections B3, B7, or B10, as applicable. Apply plates to each face of truss and position as shown above and on the Joint Details, unless noted otherwise. Refer to drawings 160A-Z for standard plate positions.

Alpine, a division of ITW Building Components Group Inc. shall not be responsible for any deviation from this drawing,any failure to build the truss in conformance with ANSI/TPI 1, or for handling, shipping, installation and bracing of trusses**A seal on this drawing or cover page listing this drawing, indicates acceptance of professional engineering responsibility solely for the design shown. The suitability and use of this drawing for any structure is the responsibility of the Building Designer per ANSI/TPI 1 Sec.2.**

For more information see this job's general notes page and these web sites: ALPINE: www.alpineitw.com; TPI: www.tpinst.org; SBCA: www.sbcindustry.com; ICC: www.iccsafe.org

ALPINE
AN ITW COMPANY
2400 Lake Orange Dr.
Suite 150
Orlando FL, 32837

Job Number: 16-0982	Ply: 1	SEQN: 468448 / T11 COMN	Cust: R215 JRef: 1VZZ2150001
HUBBART RESIDENCE	Qty: 1	FROM: CDM	DrwNo: 104.17.1304.42197
Truss Label: D04			KM / DF 04/14/2017

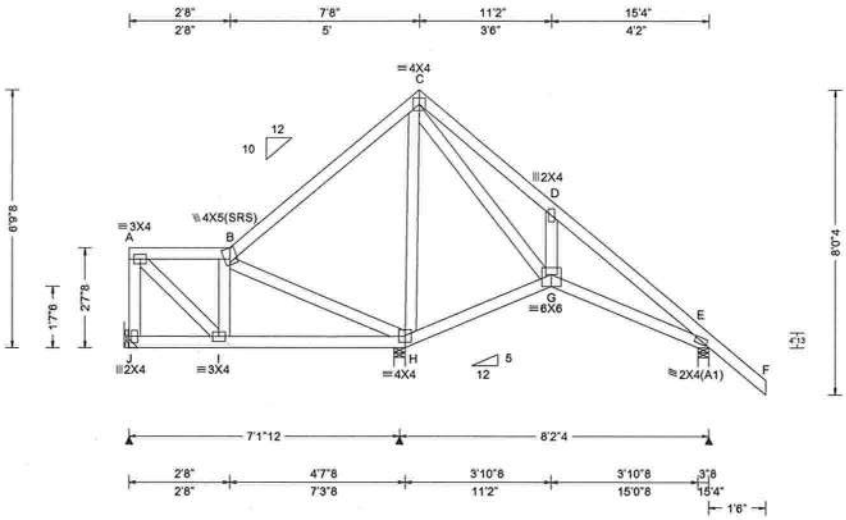

Loading Criteria (psf)

TCLL:	20.00
TCDL:	10.00
BCLL:	0.00
BCDL:	10.00
Des Ld:	40.00
NCBCLL:	10.00
Soffit:	2.00

Load Duration: 1.25
Spacing: 24.0 "

Wind Criteria
Wind Std: ASCE 7-10
Speed: 130 mph
Enclosure: Closed
Risk Category: II
EXP: C
Mean Height: 15.00 ft
TCDL: 5.0 psf
BCDL: 5.0 psf
MWFRS Parallel Dist: 0 to h/2
C&C Dist a: 3.00 ft
Loc. from endwall: not in 4.50 ft
GCpi: 0.18
Wind Duration: 1.60

Snow Criteria (Pg,Pf in PSF)
Pg: NA Ct: NA CAT: NA
Pf: NA Ce: NA
Lu: NA Cs: NA
Snow Duration: NA

Code / Misc Criteria
Bldg Code: FBC 2014 RES
TPI Std: 2007
Rep Factors Used: Yes
FT/RT:20(0)/10(0)
Plate Type(s):
WAVE

Defl/CSI Criteria

PP Deflection in	loc	L/defl	L/#
VERT(LL): 0.005	D	999	240
VERT(TL): 0.015	D	999	180
HORZ(LL): 0.004	G	-	-
HORZ(TL): 0.011	G	-	-

Creep Factor: 1.5
Max TC CSI: 0.216
Max BC CSI: 0.068
Max Web CSI: 0.258

VIEW Ver: 16.02.01B.0131.17

▲ Maximum Reactions (lbs)

Loc	R	/ U	/ Rw	/ Rh	/ RL	/ W
J	228	/ 64	/ 119	/ -	/ 195	/ -
H	928	/ 71	/ 559	/ -	/ -	/ 3.5
E	350	/ 77	/ 275	/ -	/ -	/ 3.5

Wind reactions based on MWFRS
J Min Brg Width Req = -
H Min Brg Width Req = 1.5
E Min Brg Width Req = 1.5
Bearings H & E are a rigid surface.

Members not listed have forces less than 375#

Maximum Web Forces Per Ply (lbs)

Webs	Tens.	Comp.	Webs	Tens.	Comp.
H - C	40	-649	C - G	405	-75

Lumber

Top chord 2x4 SP M-31
Bot chord 2x4 SP M-31
Webs 2x4 SP M-31

Hangers / Ties

Recommended hanger connections are based on manufacturer tested capacities and calculations. Conditions may exist that require different connections than indicated. Refer to manufacturer publication for additional information.

Bearing at location x=0' uses the following support conditions:
Bearing J (0', 10') LUS26
Supporting Member: (1)2x6 SP M-31
(4) 0.148"x3" nails into supporting member,
(3) 0.148"x3" nails into supported member.

Purlins

In lieu of structural panels use purlins to brace all flat TC @ 24" oc.

Wind

Wind loads based on MWFRS with additional C&C member design.

Left end vertical not exposed to wind pressure.

Additional Notes

Shim all supports to solid bearing.

DOUGLAS FLEMING
LICENSE
No. 66648
STATE OF
FLORIDA
PROFESSIONAL ENGINEER

#0 278
04/14/2017

****WARNING**** READ AND FOLLOW ALL NOTES ON THIS DRAWING!
****IMPORTANT**** FURNISH THIS DRAWING TO ALL CONTRACTORS INCLUDING THE INSTALLERS

Trusses require extreme care in fabricating, handling, shipping, installing and bracing. Refer to and follow the latest edition of BCSI (Building Component Safety Information, by TPI and SBCA) for safety practices prior to performing these functions. Installers shall provide temporary bracing per BCSI. Unless noted otherwise,top chord shall have properly attached structural sheathing and bottom chord shall have a properly attached rigid ceiling. Locations shown for permanent lateral restraint of webs shall have bracing installed per BCSI sections B3, B7, or B10, as applicable. Apply plates to each face of truss and position as shown above and on the Joint Details, unless noted otherwise. Refer to drawings 160A-Z for standard plate positions.

Alpine, a division of ITW Building Components Group Inc. shall not be responsible for any deviation from this drawing,any failure to build the truss in conformance with ANSI/TPI 1, or for handling, shipping, installation and bracing of trusses**A seal on this drawing or cover page listing this drawing, indicates acceptance of professional engineering responsibility solely for the design shown. The suitability and use of this drawing for any structure is the responsibility of the Building Designer per ANSI/TPI 1 Sec.2.**

For more information see this job's general notes page and these web sites: ALPINE: www.alpineitw.com; TPI: www.tpinst.org; SBCA: www.sbcindustry.com; ICC: www.iccsafe.org

ALPINE
AN ITW COMPANY
2400 Lake Orange Dr.
Suite 150
Orlando FL, 32837

Job Number: 16-0982 HUBBART RESIDENCE **Truss Label:** D05	Ply: 1 Qty: 1	SEQN: 455378 / T17 COMN FROM: CDM	Cust: R215 JRef: 1VZZ2150001 DrwNo: 104.17.1304.43370 KM / DF 04/14/2017

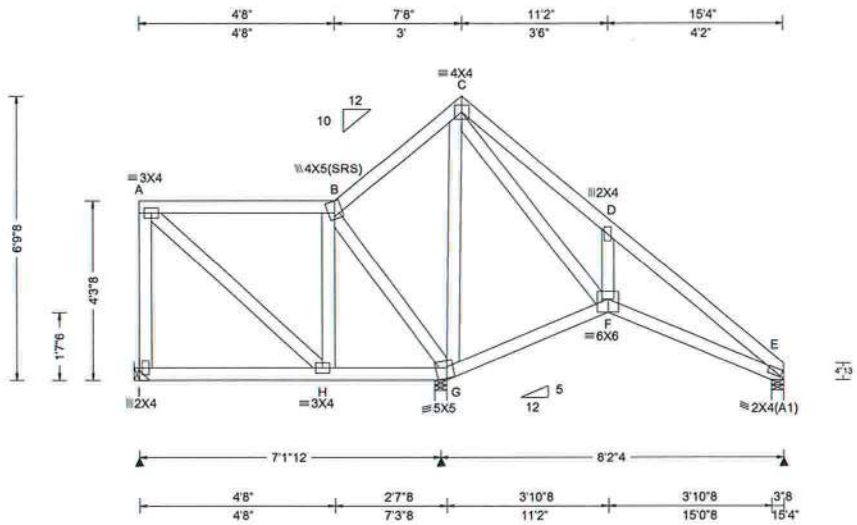

Loading Criteria (psf)
TCLL: 20.00
TCDL: 10.00
BCLL: 0.00
BCDL: 10.00
Des Ld: 40.00
NCBCLL: 10.00
Soffit: 2.00
Load Duration: 1.25
Spacing: 24.0 "

Wind Criteria
Wind Std: ASCE 7-10
Speed: 130 mph
Enclosure: Closed
Risk Category: II
EXP: C
Mean Height: 15.00 ft
TCDL: 5.0 psf
BCDL: 5.0 psf
MWFRS Parallel Dist: h/2 to h
C&C Dist a: 3.00 ft
Loc. from endwall: not in 4.50 ft
GCpi: 0.18
Wind Duration: 1.60

Snow Criteria (Pg,Pf in PSF)
Pg: NA Ct: NA CAT: NA
Pf: NA Ce: NA
Lu: NA Cs: NA
Snow Duration: NA

Code / Misc Criteria
Bldg Code: FBC 2014 RES
TPI Std: 2007
Rep Factors Used: Yes
FT/RT:20(0)/10(0)
Plate Type(s):
WAVE

Defl/CSI Criteria

PP Deflection in	loc	L/defl	L/#
VERT(LL): 0.005	D	999	240
VERT(TL): 0.015	D	999	180
HORZ(LL): 0.004	F	-	-
HORZ(TL): 0.011	F	-	-

Creep Factor: 1.5
Max TC CSI: 0.161
Max BC CSI: 0.061
Max Web CSI: 0.230

VIEW Ver: 16.01.00D.0413.17

▲ Maximum Reactions (lbs)

Loc	R	/ U	/ Rw	/ Rh	/ RL	/ W
I	233	/ 82	/ 108	/ -	/ 148	/ -
G	915	/ 92	/ 517	/ -	/ -	/ 3.5
E	245	/ 31	/ 163	/ -	/ -	/ 3.5

Wind reactions based on MWFRS
I Min Brg Width Req = -
G Min Brg Width Req = 1.5
E Min Brg Width Req = 1.5
Bearings G & E are a rigid surface.

Members not listed have forces less than 375#

Maximum Web Forces Per Ply (lbs)

Webs	Tens.	Comp.	Webs	Tens.	Comp.
G - C	52	-581	C - F	488	-128

Lumber

Top chord 2x4 SP M-31
Bot chord 2x4 SP M-31
Webs 2x4 SP M-31

Hangers / Ties

Recommended hanger connections are based on manufacturer tested capacities and calculations. Conditions may exist that require different connections than indicated. Refer to manufacturer publication for additional information.

Bearing at location x=0' uses the following support conditions:
Bearing I (0', 10') LUS26
Supporting Member: (1)2x6 SP M-31
(4) 0.148"x3" nails into supporting member,
(3) 0.148"x3" nails into supported member.

Purlins

In lieu of structural panels use purlins to brace all flat TC @ 24" oc.

Wind

Wind loads based on MWFRS with additional C&C member design.

Left end vertical not exposed to wind pressure.

Additional Notes

Shim all supports to solid bearing.

#0 278
04/14/2017

****WARNING**** READ AND FOLLOW ALL NOTES ON THIS DRAWING!
****IMPORTANT**** FURNISH THIS DRAWING TO ALL CONTRACTORS INCLUDING THE INSTALLERS

Trusses require extreme care in fabricating, handling, shipping, installing and bracing. Refer to and follow the latest edition of BCSI (Building Component Safety Information, by TPI and SBCA) for safety practices prior to performing these functions. Installers shall provide temporary bracing per BCSI. Unless noted otherwise,top chord shall have properly attached structural sheathing and bottom chord shall have a properly attached rigid ceiling. Locations shown for permanent lateral restraint of webs shall have bracing installed per BCSI sections B3, B7, or B10, as applicable. Apply plates to each face of truss and position as shown above and on the Joint Details, unless noted otherwise. Refer to drawings 160A-Z for standard plate positions.

Alpine, a division of ITW Building Components Group Inc. shall not be responsible for any deviation from this drawing,any failure to build the truss in conformance with ANSI/TPI 1, or for handling, shipping, installation and bracing of trusses**A seal on this drawing or cover page listing this drawing, indicates acceptance of professional engineering responsibility solely for the design shown. The suitability and use of this drawing for any structure is the responsibility of the Building Designer per ANSI/TPI 1 Sec.2.**

For more information see this job's general notes page and these web sites: ALPINE: www.alpineitw.com; TPI: www.tpinst.org; SBCA: www.sbcindustry.com; ICC: www.iccsafe.org

ALPINE
AN ITW COMPANY
2400 Lake Orange Dr.
Suite 150
Orlando FL, 32837

Job Number: 16-0982	Ply: 1	SEQN: 455379 / T13 COMN	Cust: R215 JRef: 1VZZ2150001
HUBBART RESIDENCE	Qty: 1	FROM: CDM	DrwNo: 104.17.1304.45150
Truss Label: D06			KM / DF 04/14/2017

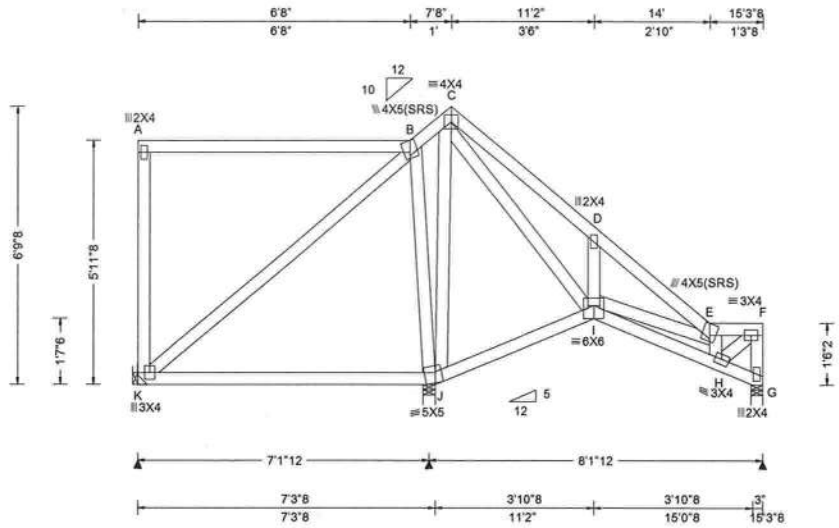

Loading Criteria (psf)

TCLL:	20.00
TCDL:	10.00
BCLL:	0.00
BCDL:	10.00
Des Ld:	40.00
NCBCLL:	10.00
Soffit:	2.00

Load Duration: 1.25
Spacing: 24.0 "

Wind Criteria
Wind Std: ASCE 7-10
Speed: 130 mph
Enclosure: Closed
Risk Category: II
EXP: C
Mean Height: 15.00 ft
TCDL: 5.0 psf
BCDL: 5.0 psf
MWFRS Parallel Dist: h/2 to h
C&C Dist a: 3.00 ft
Loc. from endwall: not in 9.00 ft
GCpi: 0.18
Wind Duration: 1.60

Snow Criteria (Pg,Pf in PSF)
Pg: NA Ct: NA CAT: NA
Pf: NA Ce: NA
Lu: NA Cs: NA
Snow Duration: NA

Code / Misc Criteria
Bldg Code: FBC 2014 RES
TPI Std: 2007
Rep Factors Used: Yes
FT/RT:20(0)/10(0)
Plate Type(s):
WAVE

Defl/CSI Criteria

PP Deflection in	loc	L/defl	L/#
VERT(LL): 0.005	D	999	240
VERT(TL): 0.015	D	999	180
HORZ(LL): 0.004	G	-	-
HORZ(TL): 0.011	G	-	-

Creep Factor: 1.5
Max TC CSI: 0.360
Max BC CSI: 0.187
Max Web CSI: 0.202

VIEW Ver: 16.01.00D.0413.17

▲ Maximum Reactions (lbs)

Loc	R	/ U	/ Rw	/ Rh	/ RL	/ W
K	227	/ 84	/ 71	/ -	/ 128	/ -
J	952	/ 116	/ 583	/ -	/ -	/ 3.5
G	216	/ 11	/ 117	/ -	/ -	/ 3.5

Wind reactions based on MWFRS
K Min Brg Width Req = -
J Min Brg Width Req = 1.5
G Min Brg Width Req = 1.5
Bearings J & G are a rigid surface.

Members not listed have forces less than 375#

Maximum Web Forces Per Ply (lbs)

Webs	Tens.	Comp.	Webs	Tens.	Comp.
J - C	57	-508	C - I	412	-114

Lumber

Top chord 2x4 SP M-31
Bot chord 2x4 SP M-31
Webs 2x4 SP M-31

Hangers / Ties

Recommended hanger connections are based on manufacturer tested capacities and calculations. Conditions may exist that require different connections than indicated. Refer to manufacturer publication for additional information.

Bearing at location x=0' uses the following support conditions:
Bearing K (0', 10') LUS26
Supporting Member: (1)2x6 SP M-31
(4) 0.148"x3" nails into supporting member,
(3) 0.148"x3" nails into supported member.

Purlins

In lieu of structural panels use purlins to brace all flat TC @ 24" oc.

Wind

Wind loads based on MWFRS with additional C&C member design.

Left end vertical not exposed to wind pressure.

Additional Notes

Shim all supports to solid bearing.

DOUGLAS FLEMING
LICENSE
No. 66648
STATE OF
FLORIDA
PROFESSIONAL ENGINEER

#0 278
04/14/2017

****WARNING**** READ AND FOLLOW ALL NOTES ON THIS DRAWING!
****IMPORTANT**** FURNISH THIS DRAWING TO ALL CONTRACTORS INCLUDING THE INSTALLERS

Trusses require extreme care in fabricating, handling, shipping, installing and bracing. Refer to and follow the latest edition of BCSI (Building Component Safety Information, by TPI and SBCA) for safety practices prior to performing these functions. Installers shall provide temporary bracing per BCSI. Unless noted otherwise,top chord shall have properly attached structural sheathing and bottom chord shall have a properly attached rigid ceiling. Locations shown for permanent lateral restraint of webs shall have bracing installed per BCSI sections B3, B7, or B10, as applicable. Apply plates to each face of truss and position as shown above and on the Joint Details, unless noted otherwise. Refer to drawings 160A-Z for standard plate positions.

Alpine, a division of ITW Building Components Group Inc. shall not be responsible for any deviation from this drawing,any failure to build the truss in conformance with ANSI/TPI 1, or for handling, shipping, installation and bracing of trusses**A seal on this drawing or cover page listing this drawing, indicates acceptance of professional engineering responsibility solely for the design shown. The suitability and use of this drawing for any structure is the responsibility of the Building Designer per ANSI/TPI 1 Sec.2.**

For more information see this job's general notes page and these web sites: ALPINE: www.alpineitw.com; TPI: www.tpinst.org; SBCA: www.sbcindustry.com; ICC: www.iccsafe.org

ALPINE™ AN ITW COMPANY
2400 Lake Orange Dr.
Suite 150
Orlando FL, 32837

Job Number: 16-0982 HUBBART RESIDENCE **Truss Label:** D07	Ply: 1 Qty: 1	SEQN: 455441 / T10 COMN FROM: CDM	Cust: R215 JRef: 1VZZ2150001 DrwNo: 104.17.1304.49213 KM / DF 04/14/2017

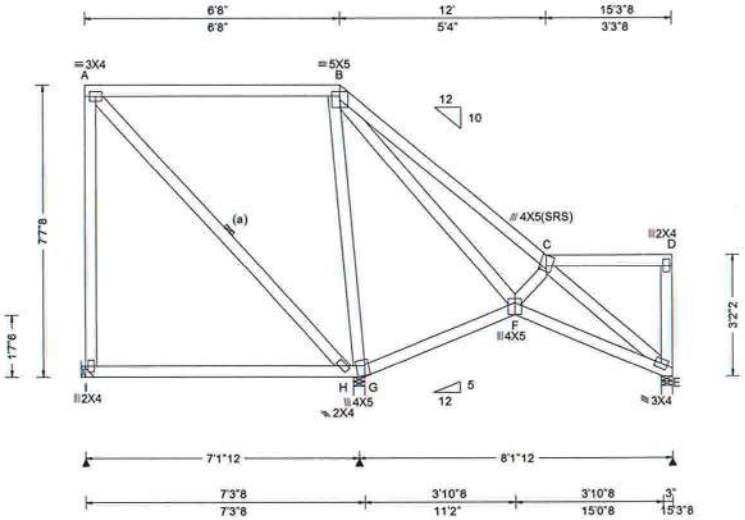

Loading Criteria (psf)

TCLL:	20.00
TCDL:	10.00
BCLL:	0.00
BCDL:	10.00
Des Ld:	40.00
NCBCLL:	10.00
Soffit:	2.00

Load Duration: 1.25
Spacing: 24.0 "

Wind Criteria
Wind Std: ASCE 7-10
Speed: 130 mph
Enclosure: Closed
Risk Category: II
EXP: C
Mean Height: 15.40 ft
TCDL: 5.0 psf
BCDL: 5.0 psf
MWFRS Parallel Dist: h/2 to h
C&C Dist a: 3.00 ft
Loc. from endwall: not in 9.00 ft
GCpi: 0.18
Wind Duration: 1.60

Snow Criteria (Pg,Pf in PSF)
Pg: NA Ct: NA CAT: NA
Pf: NA Ce: NA
Lu: NA Cs: NA
Snow Duration: NA

Code / Misc Criteria
Bldg Code: FBC 2014 RES
TPI Std: 2007
Rep Factors Used: Yes
FT/RT:20(0)/10(0)
Plate Type(s):
WAVE

Defl/CSI Criteria

PP Deflection in	loc	L/defl	L/#
VERT(LL): 0.008	F	999	240
VERT(TL): 0.033	H	999	180
HORZ(LL): 0.009	A	-	-
HORZ(TL): 0.033	A	-	-

Creep Factor: 1.5
Max TC CSI: 0.360
Max BC CSI: 0.175
Max Web CSI: 0.319

VIEW Ver: 16.01.00D.0413.17

▲ Maximum Reactions (lbs)

Loc	R	/ U	/ Rw	/ Rh	/ RL	/ W
I	287	/ 62	/ 156	/ -	/ 125	/ -
H	830	/ 170	/ 428	/ -	/ -	/ 3.5
E	282	/ 10	/ 205	/ -	/ -	/ 3.5

Wind reactions based on MWFRS
I Min Brg Width Req = -
H Min Brg Width Req = 1.5
E Min Brg Width Req = 1.5
Bearings H & E are a rigid surface.

Members not listed have forces less than 375#

Maximum Top Chord Forces Per Ply (lbs)

Chords	Tens.	Comp.
B - C	0	-454

Maximum Bot Chord Forces Per Ply (lbs)

Chords	Tens.	Comp.
F - E	424	0

Maximum Web Forces Per Ply (lbs)

Webs	Tens.	Comp.	Webs	Tens.	Comp.
B - G	232	-582	C - E	0	-478
B - F	483	-59			

Lumber
Top chord 2x4 SP M-31
Bot chord 2x4 SP M-31
Webs 2x4 SP M-31

Bracing
(a) Continuous lateral restraint equally spaced on member.

Hangers / Ties
Recommended hanger connections are based on manufacturer tested capacities and calculations. Conditions may exist that require different connections than indicated. Refer to manufacturer publication for additional information.

Bearing at location x=0' uses the following support conditions:
Bearing I (0', 10') LUS26
Supporting Member: (1)2x6 SP M-31
(4) 0.148"x3" nails into supporting member,
(3) 0.148"x3" nails into supported member.

Purlins
In lieu of structural panels use purlins to brace all flat TC @ 24" oc.

Wind
Wind loads based on MWFRS with additional C&C member design.
End verticals not exposed to wind pressure.

Additional Notes
Shim all supports to solid bearing.

DOUGLAS FLEMING
LICENSE
No. 66648
STATE OF
FLORIDA
PROFESSIONAL ENGINEER
#0 278
04/14/2017

****WARNING**** READ AND FOLLOW ALL NOTES ON THIS DRAWING!
****IMPORTANT**** FURNISH THIS DRAWING TO ALL CONTRACTORS INCLUDING THE INSTALLERS

Trusses require extreme care in fabricating, handling, shipping, installing and bracing. Refer to and follow the latest edition of BCSI (Building Component Safety Information, by TPI and SBCA) for safety practices prior to performing these functions. Installers shall provide temporary bracing per BCSI. Unless noted otherwise,top chord shall have properly attached structural sheathing and bottom chord shall have a properly attached rigid ceiling. Locations shown for permanent lateral restraint of webs shall have bracing installed per BCSI sections B3, B7, or B10, as applicable. Apply plates to each face of truss and position as shown above and on the Joint Details, unless noted otherwise. Refer to drawings 160A-Z for standard plate positions.

Alpine, a division of ITW Building Components Group Inc. shall not be responsible for any deviation from this drawing,any failure to build the truss in conformance with ANSI/TPI 1, or for handling, shipping, installation and bracing of trusses**A seal on this drawing or cover page listing this drawing, indicates acceptance of professional engineering responsibility solely for the design shown. The suitability and use of this drawing for any structure is the responsibility of the Building Designer per ANSI/TPI 1 Sec.2.**

For more information see this job's general notes page and these web sites: ALPINE: www.alpineitw.com; TPI: www.tpinst.org; SBCA: www.sbcindustry.com; ICC: www.iccsafe.org

ALPINE
AN ITW COMPANY
2400 Lake Orange Dr.
Suite 150
Orlando FL, 32837

Job Number: 16-0982 HUBBART RESIDENCE **Truss Label:** G01	Ply: 1 Qty: 1	SEQN: 455490 / T85 GABL FROM: CDM	Cust: R215 JRef: 1VZZ2150001 DrwNo: 104.17.1304.55213 KM / DF 04/14/2017

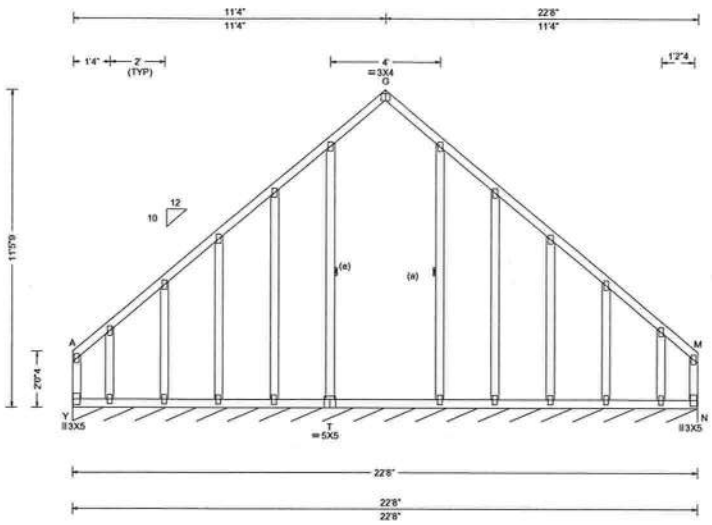

Loading Criteria (psf)	**Wind Criteria**	**Snow Criteria** (Pg,Pf in PSF)	**Defl/CSI Criteria**	**▲ Maximum Reactions (lbs), or *=PLF**
TCLL: 20.00 TCDL: 10.00 BCLL: 0.00 BCDL: 10.00 Des Ld: 40.00 NCBCLL: 10.00 Soffit: 2.00 Load Duration: 1.25 Spacing: 24.0 "	Wind Std: ASCE 7-10 Speed: 130 mph Enclosure: Closed Risk Category: II EXP: C Mean Height: 15.00 ft TCDL: 5.0 psf BCDL: 5.0 psf MWFRS Parallel Dist: 0 to h/2 C&C Dist a: 3.00 ft Loc. from endwall: Any GCpi: 0.18 Wind Duration: 1.60	Pg: NA Ct: NA CAT: NA Pf: NA Ce: NA Lu: NA Cs: NA Snow Duration: NA **Code / Misc Criteria** Bldg Code: FBC 2014 RES TPI Std: 2007 Rep Factors Used: Yes FT/RT:20(0)/10(0) Plate Type(s): WAVE	PP Deflection in loc L/defl L/# VERT(LL): 0.047 G 999 240 VERT(TL): 0.077 G 999 180 HORZ(LL): 0.163 M - - HORZ(TL): 0.311 M - - Creep Factor: 1.5 Max TC CSI: 0.204 Max BC CSI: 0.097 Max Web CSI: 0.109 VIEW Ver: 16.01.00D.0413.17	Loc R / U / Rw / Rh / RL / W N* 86 / 12 / 49 / - / 12 / 271 Wind reactions based on MWFRS Y Min Brg Width Req = - Bearing Y is a rigid surface. Members not listed have forces less than 375#

Lumber

Top chord 2x4 SP M-31
Bot chord 2x4 SP M-31
Webs 2x4 SP M-31

Bracing

(a) Continuous lateral restraint equally spaced on member.

Plating Notes

All plates are 2X4 except as noted.

Wind

Wind loads based on MWFRS with additional C&C member design.

End verticals not exposed to wind pressure.

Additional Notes

See DWGS S14015ENC100815 & GBLLETIN1014 for gable wind bracing and other requirements.

#0 278

04/14/2017

****WARNING**** READ AND FOLLOW ALL NOTES ON THIS DRAWING!
****IMPORTANT**** FURNISH THIS DRAWING TO ALL CONTRACTORS INCLUDING THE INSTALLERS

Trusses require extreme care in fabricating, handling, shipping, installing and bracing. Refer to and follow the latest edition of BCSI (Building Component Safety Information, by TPI and SBCA) for safety practices prior to performing these functions. Installers shall provide temporary bracing per BCSI. Unless noted otherwise,top chord shall have properly attached structural sheathing and bottom chord shall have a properly attached rigid ceiling. Locations shown for permanent lateral restraint of webs shall have bracing installed per BCSI sections B3, B7, or B10, as applicable. Apply plates to each face of truss and position as shown above and on the Joint Details, unless noted otherwise. Refer to drawings 160A-Z for standard plate positions.

Alpine, a division of ITW Building Components Group Inc. shall not be responsible for any deviation from this drawing,any failure to build the truss in conformance with ANSI/TPI 1, or for handling, shipping, installation and bracing of trusses**A seal on this drawing or cover page listing this drawing, indicates acceptance of professional engineering responsibility solely for the design shown. The suitability and use of this drawing for any structure is the responsibility of the Building Designer per ANSI/TPI 1 Sec.2.**

For more information see this job's general notes page and these web sites: ALPINE: www.alpineitw.com; TPI: www.tpinst.org; SBCA: www.sbcindustry.com; ICC: www.iccsafe.org

ALPINE
AN ITW COMPANY
2400 Lake Orange Dr.
Suite 150
Orlando FL, 32837

Job Number: 16-0982 HUBBART RESIDENCE **Truss Label:** G02	Ply: 1 Qty: 2	SEQN: 468428 / T49 COMN FROM: CDM	Cust: R215 JRef: 1VZZ2150001 DrwNo: 104.17.1305.09723 KM / DF 04/14/2017

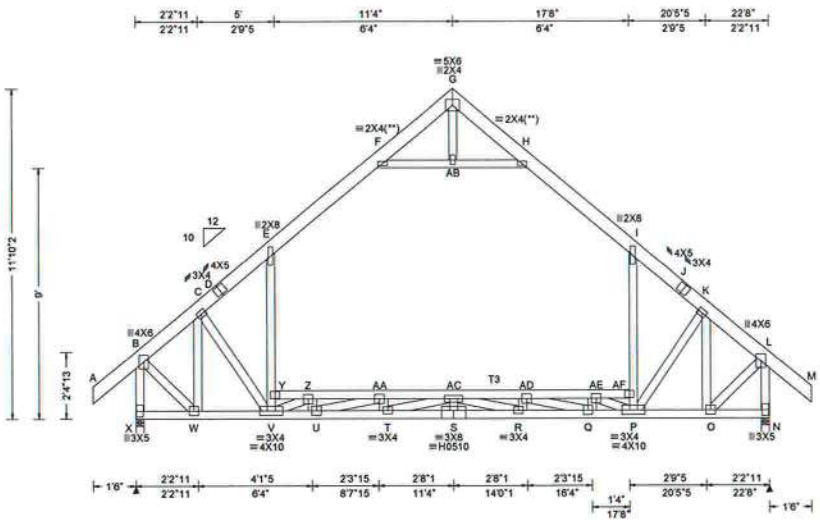

Loading Criteria (psf)
TCLL: 20.00
TCDL: 10.00
BCLL: 0.00
BCDL: 10.00
Des Ld: 40.00
NCBCLL: 10.00
Soffit: 2.00
Load Duration: 1.25
Spacing: 24.0 "

Wind Criteria
Wind Std: ASCE 7-10
Speed: 130 mph
Enclosure: Closed
Risk Category: II
EXP: C
Mean Height: 15.00 ft
TCDL: 5.0 psf
BCDL: 5.0 psf
MWFRS Parallel Dist: 0 to h/2
C&C Dist a: 3.00 ft
Loc. from endwall: Any
GCpi: 0.18
Wind Duration: 1.60

Snow Criteria (Pg,Pf in PSF)
Pg: NA Ct: NA CAT: NA
Pf: NA Ce: NA
Lu: NA Cs: NA
Snow Duration: NA

Code / Misc Criteria
Bldg Code: FBC 2014 RES
TPI Std: 2007
Rep Factors Used: Yes
FT/RT:20(0)/10(0)
Plate Type(s):
WAVE, HS

Defl/CSI Criteria

PP Deflection in	loc	L/defl	L/#
VERT(LL): 0.280	S	971	240
VERT(TL): 0.666	S	408	180
HORZ(LL): 0.178	E	-	-
HORZ(TL): 0.493	E	-	-

Creep Factor: 1.5
Max TC CSI: 0.455
Max BC CSI: 0.563
Max Web CSI: 0.213

VIEW Ver: 16.02.01B.0131.17

▲ Maximum Reactions (lbs)

Loc	R	/ U	/ Rw	/ Rh	/ RL	/ W
X	1958	/ 160	/ 646	/ -	/ 352	/ 3.5
N	1958	/ 160	/ 646	/ -	/ -	/ 3.5

Wind reactions based on MWFRS
X Min Brg Width Req = 1.6
N Min Brg Width Req = 1.6
Bearings X & N are a rigid surface.

Members not listed have forces less than 375#

Maximum Top Chord Forces Per Ply (lbs)

Chords	Tens.	Comp.	Chords	Tens.	Comp.
B - C	246	-1336	H - I	300	-1253
C - D	294	-1858	I - J	308	-1824
D - E	308	-1824	J - K	294	-1858
E - F	300	-1253	K - L	245	-1336

Maximum Bot Chord Forces Per Ply (lbs)

Chords	Tens.	Comp.	Chords	Tens.	Comp.
W - V	1051	-264	S - R	4409	-21
V - U	2431	-420	R - Q	3884	-35
U - T	3884	-219	Q - P	2419	-98
T - S	4409	-21	P - O	1051	-93

Maximum Web Forces Per Ply (lbs)

Webs	Tens.	Comp.	Webs	Tens.	Comp.
B - X	322	-1930	AB- H	433	-1458
B - W	1392	-124	AC- R	168	-584
W - C	77	-937	AC-AD	122	-2909
E - Y	872	-59	AD- Q	166	-1529
V - Z	86	-1494	AD-AE	379	-1616
Y - V	829	-59	Q -AE	536	-69
Z - U	536	-60	AE- P	108	-1494
Z -AA	344	-1616	AF- P	829	-59
U -AA	163	-1529	AF- I	872	-60
F -AB	433	-1458	K - O	79	-937
AA-AC	88	-2909	O - L	1393	-125
T -AC	182	-584	L - N	320	-1930

Lumber

Top chord 2x6 SP M-31 :T3 2x4 SP M-31:
Bot chord 2x4 SP M-31
Webs 2x4 SP M-31

Plating Notes

All plates are 4X4 except as noted.

(**) 2 plate(s) require special positioning. Refer to scaled plate plot details for special positioning requirements.

Loading

Attic room loading from 5-0-0 to 17-8-0: Live Load: 40 PSF. Dead Load: 10 PSF Ceiling: 10 PSF, Kneewalls: 10 PSF

Purlins

In lieu of structural panels use purlins to brace all flat TC @ 24" oc.

Collar-tie braced with continuous lateral bracing at 24" oc. or rigid ceiling.

Wind

Wind loads based on MWFRS with additional C&C member design.

End verticals not exposed to wind pressure.

#0 278
04/14/2017

****WARNING**** READ AND FOLLOW ALL NOTES ON THIS DRAWING!
****IMPORTANT**** FURNISH THIS DRAWING TO ALL CONTRACTORS INCLUDING THE INSTALLERS

Trusses require extreme care in fabricating, handling, shipping, installing and bracing. Refer to and follow the latest edition of BCSI (Building Component Safety Information, by TPI and SBCA) for safety practices prior to performing these functions. Installers shall provide temporary bracing per BCSI. Unless noted otherwise,top chord shall have properly attached structural sheathing and bottom chord shall have a properly attached rigid ceiling. Locations shown for permanent lateral restraint of webs shall have bracing installed per BCSI sections B3, B7, or B10, as applicable. Apply plates to each face of truss and position as shown above and on the Joint Details, unless noted otherwise. Refer to drawings 160A-Z for standard plate positions.

Alpine, a division of ITW Building Components Group Inc. shall not be responsible for any deviation from this drawing,any failure to build the truss in conformance with ANSI/TPI 1, or for handling, shipping, installation and bracing of trusses**A seal on this drawing or cover page listing this drawing, indicates acceptance of professional engineering responsibility solely for the design shown. The suitability and use of this drawing for any structure is the responsibility of the Building Designer per ANSI/TPI 1 Sec.2.**

For more information see this job's general notes page and these web sites: ALPINE: www.alpineitw.com; TPI: www.tpinst.org; SBCA: www.sbcindustry.com; ICC: www.iccsafe.org

ALPINE AN ITW COMPANY
2400 Lake Orange Dr.
Suite 150
Orlando FL, 32837

Job Number: 16-0982 HUBBART RESIDENCE **Truss Label:** G03	Ply: 1 Qty: 1	SEQN: 468430 / T86 COMN FROM: CDM	Cust: R215 JRef: 1VZZ2150001 DrwNo: 104.17.1305.14353 KM / DF 04/14/2017

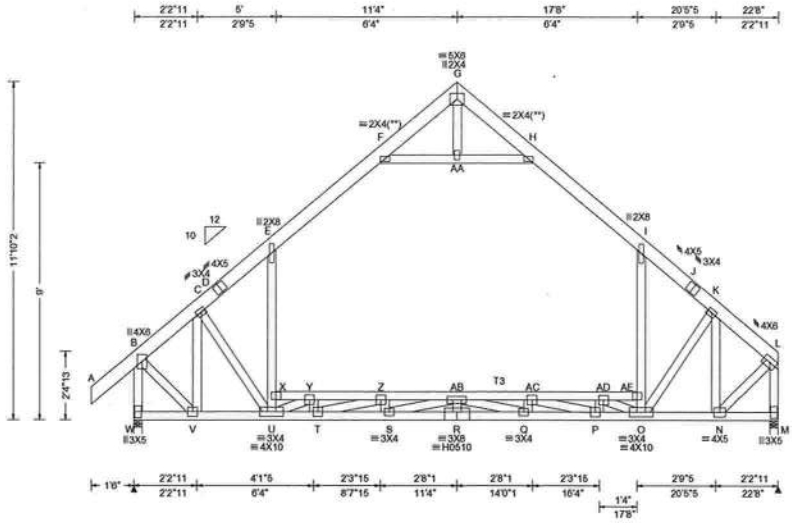

Loading Criteria (psf)
TCLL: 20.00
TCDL: 10.00
BCLL: 0.00
BCDL: 10.00
Des Ld: 40.00
NCBCLL: 10.00
Soffit: 2.00
Load Duration: 1.25
Spacing: 24.0 "

Wind Criteria
Wind Std: ASCE 7-10
Speed: 130 mph
Enclosure: Closed
Risk Category: II
EXP: C
Mean Height: 15.00 ft
TCDL: 5.0 psf
BCDL: 5.0 psf
MWFRS Parallel Dist: 0 to h/2
C&C Dist a: 3.00 ft
Loc. from endwall: Any
GCpi: 0.18
Wind Duration: 1.60

Snow Criteria (Pg,Pf in PSF)
Pg: NA Ct: NA CAT: NA
Pf: NA Ce: NA
Lu: NA Cs: NA
Snow Duration: NA

Code / Misc Criteria
Bldg Code: FBC 2014 RES
TPI Std: 2007
Rep Factors Used: Yes
FT/RT:20(0)/10(0)
Plate Type(s):
WAVE, HS

Defl/CSI Criteria

PP Deflection in	loc	L/defl	L/#
VERT(LL): 0.280	R	971	240
VERT(TL): 0.669	R	406	180
HORZ(LL): 0.174	E	-	-
HORZ(TL): 0.489	E	-	-

Creep Factor: 1.5
Max TC CSI: 0.457
Max BC CSI: 0.563
Max Web CSI: 0.218

VIEW Ver: 16.02.01B.0131.17

▲ Maximum Reactions (lbs)

Loc	R	/ U	/ Rw	/ Rh	/ RL	/ W
W	1961	/ 159	/ 648	/ -	/ 328	/ 3.5
M	1847	/ 138	/ 554	/ -	/ -	/ 3.5

Wind reactions based on MWFRS
W Min Brg Width Req = 1.6
M Min Brg Width Req = 1.5
Bearings W & M are a rigid surface.

Members not listed have forces less than 375#

Maximum Top Chord Forces Per Ply (lbs)

Chords	Tens.	Comp.	Chords	Tens.	Comp.
B - C	244	-1338	H - I	299	-1256
C - D	291	-1863	I - J	300	-1840
D - E	305	-1828	J - K	286	-1874
E - F	297	-1258	K - L	194	-1339

Maximum Bot Chord Forces Per Ply (lbs)

Chords	Tens.	Comp.	Chords	Tens.	Comp.
V - U	1053	-218	R - Q	4416	-57
U - T	2426	-376	Q - P	3898	-69
T - S	3884	-177	P - O	2438	-112
S - R	4416	-57	O - N	1074	-129

Maximum Web Forces Per Ply (lbs)

Webs	Tens.	Comp.	Webs	Tens.	Comp.
B - W	320	-1933	AA- H	428	-1466
B - V	1395	-121	AB- Q	169	-578
V - C	74	-942	AB-AC	117	-2917
E - X	872	-59	AC- P	164	-1522
U - Y	88	-1490	AC-AD	371	-1632
X - U	830	-58	P -AD	539	-68
Y - T	534	-61	AD- O	104	-1499
Y - Z	346	-1605	AE- O	838	-50
T - Z	161	-1536	AE- I	880	-51
F -AA	428	-1466	K - N	113	-952
Z -AB	92	-2905	N - L	1422	-171
S -AB	178	-590	L - M	242	-1821

Lumber

Top chord 2x6 SP M-31 :T3 2x4 SP M-31:
Bot chord 2x4 SP M-31
Webs 2x4 SP M-31

Plating Notes

All plates are 4X4 except as noted.

(**) 2 plate(s) require special positioning. Refer to scaled plate plot details for special positioning requirements.

Loading

Attic room loading from 5-0-0 to 17-8-0: Live Load: 40 PSF. Dead Load: 10 PSF Ceiling: 10 PSF, Kneewalls: 10 PSF

Purlins

In lieu of structural panels use purlins to brace all flat TC @ 24" oc.

Collar-tie braced with continuous lateral bracing at 24" oc. or rigid ceiling.

Wind

Wind loads based on MWFRS with additional C&C member design.

End verticals not exposed to wind pressure.

DOUGLAS FLEMING LICENSE No. 66648 STATE OF FLORIDA PROFESSIONAL ENGINEER

#0 278

04/14/2017

****WARNING**** READ AND FOLLOW ALL NOTES ON THIS DRAWING!
****IMPORTANT**** FURNISH THIS DRAWING TO ALL CONTRACTORS INCLUDING THE INSTALLERS

Trusses require extreme care in fabricating, handling, shipping, installing and bracing. Refer to and follow the latest edition of BCSI (Building Component Safety Information, by TPI and SBCA) for safety practices prior to performing these functions. Installers shall provide temporary bracing per BCSI. Unless noted otherwise,top chord shall have properly attached structural sheathing and bottom chord shall have a properly attached rigid ceiling. Locations shown for permanent lateral restraint of webs shall have bracing installed per BCSI sections B3, B7, or B10, as applicable. Apply plates to each face of truss and position as shown above and on the Joint Details, unless noted otherwise. Refer to drawings 160A-Z for standard plate positions.

Alpine, a division of ITW Building Components Group Inc. shall not be responsible for any deviation from this drawing,any failure to build the truss in conformance with ANSI/TPI 1, or for handling, shipping, installation and bracing of trusses**A seal on this drawing or cover page listing this drawing, indicates acceptance of professional engineering responsibility solely for the design shown. The suitability and use of this drawing for any structure is the responsibility of the Building Designer per ANSI/TPI 1 Sec.2.**

For more information see this job's general notes page and these web sites: ALPINE: www.alpineitw.com; TPI: www.tpinst.org; SBCA: www.sbcindustry.com; ICC: www.iccsafe.org

ALPINE AN ITW COMPANY
2400 Lake Orange Dr.
Suite 150
Orlando FL, 32837

Job Number: 16-0982 HUBBART RESIDENCE **Truss Label:** G06	Ply: 1 Qty: 1	SEQN: 467703 / T54 COMN FROM: CDM	Cust: R215 JRef: 1VZZ2150001 DrwNo: 104.17.1305.29900 KM / DF 04/14/2017

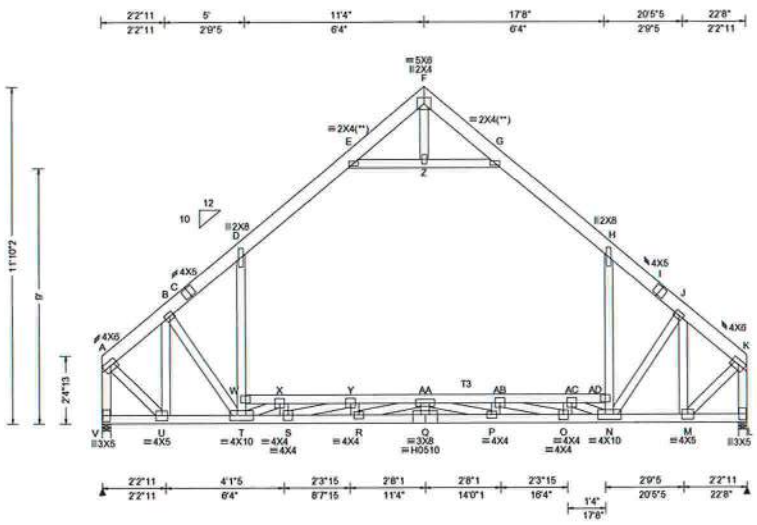

Loading Criteria (psf)

TCLL:	20.00
TCDL:	10.00
BCLL:	0.00
BCDL:	10.00
Des Ld:	40.00
NCBCLL:	10.00
Soffit:	2.00

Load Duration: 1.25
Spacing: 24.0 "

Wind Criteria
Wind Std: ASCE 7-10
Speed: 130 mph
Enclosure: Closed
Risk Category: II
EXP: C
Mean Height: 15.00 ft
TCDL: 5.0 psf
BCDL: 5.0 psf
MWFRS Parallel Dist: 0 to h/2
C&C Dist a: 3.00 ft
Loc. from endwall: Any
GCpi: 0.18
Wind Duration: 1.60

Snow Criteria (Pg,Pf in PSF)
Pg: NA Ct: NA CAT: NA
Pf: NA Ce: NA
Lu: NA Cs: NA
Snow Duration: NA

Code / Misc Criteria
Bldg Code: FBC 2014 RES
TPI Std: 2007
Rep Factors Used: Yes
FT/RT:20(0)/10(0)
Plate Type(s):
WAVE, HS

Defl/CSI Criteria

PP Deflection in	loc	L/defl	L/#
VERT(LL): 0.280	Q	972	240
VERT(TL): 0.672	Q	404	180
HORZ(LL): 0.177	D	-	-
HORZ(TL): 0.500	D	-	-

Creep Factor: 1.5
Max TC CSI: 0.458
Max BC CSI: 0.563
Max Web CSI: 0.213

VIEW Ver: 16.02.01B.0131.17

▲ Maximum Reactions (lbs)

Loc	R	/ U	/ Rw	/ Rh	/ RL	/ W
V	1851	/ 136	/ 554	/ -	/ 281	/ 3.5
L	1851	/ 136	/ 554	/ -	/ -	/ 3.5

Wind reactions based on MWFRS
V Min Brg Width Req = 1.5
L Min Brg Width Req = 1.5
Bearings V & L are a rigid surface.

Members not listed have forces less than 375#

Maximum Top Chord Forces Per Ply (lbs)

Chords	Tens.	Comp.	Chords	Tens.	Comp.
A - B	192	-1341	G - H	294	-1261
B - C	282	-1879	H - I	296	-1845
C - D	296	-1844	I - J	282	-1879
D - E	294	-1261	J - K	192	-1341

Maximum Bot Chord Forces Per Ply (lbs)

Chords	Tens.	Comp.	Chords	Tens.	Comp.
U - T	1076	-210	Q - P	4423	-51
T - S	2445	-368	P - O	3898	-69
S - R	3898	-171	O - N	2435	-111
R - Q	4423	-51	N - M	1076	-128

Maximum Web Forces Per Ply (lbs)

Webs	Tens.	Comp.	Webs	Tens.	Comp.
A - V	240	-1824	Z - G	420	-1474
A - U	1424	-169	AA- P	166	-584
U - B	109	-957	AA-AB	116	-2914
D - W	881	-49	AB- O	161	-1529
T - X	86	-1496	AB-AC	368	-1621
W - T	838	-49	O -AC	537	-67
X - S	537	-60	AC- N	103	-1496
X - Y	339	-1621	AD- N	838	-49
S - Y	159	-1529	AD- H	881	-50
E - Z	420	-1474	J - M	109	-957
Y -AA	89	-2913	M - K	1424	-169
R -AA	177	-584	K - L	240	-1824

Lumber

Top chord 2x6 SP M-31 :T3 2x4 SP M-31:
Bot chord 2x4 SP M-31
Webs 2x4 SP M-31

Plating Notes

All plates are 3X4 except as noted.

(**) 2 plate(s) require special positioning. Refer to scaled plate plot details for special positioning requirements.

Loading

Attic room loading from 5-0-0 to 17-8-0: Live Load: 40 PSF. Dead Load: 10 PSF Ceiling: 10 PSF, Kneewalls: 10 PSF

Purlins

In lieu of structural panels use purlins to brace all flat TC @ 24" oc.

Collar-tie braced with continuous lateral bracing at 24" oc. or rigid ceiling.

Wind

Wind loads based on MWFRS with additional C&C member design.

End verticals not exposed to wind pressure.

DOUGLAS FLEMING
LICENSE
No. 66648
STATE OF
FLORIDA
PROFESSIONAL ENGINEER
#0 278

04/14/2017

****WARNING**** READ AND FOLLOW ALL NOTES ON THIS DRAWING!
****IMPORTANT**** FURNISH THIS DRAWING TO ALL CONTRACTORS INCLUDING THE INSTALLERS

Trusses require extreme care in fabricating, handling, shipping, installing and bracing. Refer to and follow the latest edition of BCSI (Building Component Safety Information, by TPI and SBCA) for safety practices prior to performing these functions. Installers shall provide temporary bracing per BCSI. Unless noted otherwise,top chord shall have properly attached structural sheathing and bottom chord shall have a properly attached rigid ceiling. Locations shown for permanent lateral restraint of webs shall have bracing installed per BCSI sections B3, B7, or B10, as applicable. Apply plates to each face of truss and position as shown above and on the Joint Details, unless noted otherwise. Refer to drawings 160A-Z for standard plate positions.

Alpine, a division of ITW Building Components Group Inc. shall not be responsible for any deviation from this drawing,any failure to build the truss in conformance with ANSI/TPI 1, or for handling, shipping, installation and bracing of trusses**A seal on this drawing or cover page listing this drawing, indicates acceptance of professional engineering responsibility solely for the design shown. The suitability and use of this drawing for any structure is the responsibility of the Building Designer per ANSI/TPI 1 Sec.2.**

For more information see this job's general notes page and these web sites: ALPINE: www.alpineitw.com; TPI: www.tpinst.org; SBCA: www.sbcindustry.com; ICC: www.iccsafe.org

ALPINE™ AN ITW COMPANY
2400 Lake Orange Dr.
Suite 150
Orlando FL, 32837

Job Number: 16-0982 HUBBART RESIDENCE **Truss Label:** G08	Ply: 1 Qty: 1	SEQN: 455492 / T91 GABL FROM: CDM	Cust: R215 JRef: 1VZZ2150001 DrwNo: 104.17.1305.33467 KM / DF 04/14/2017

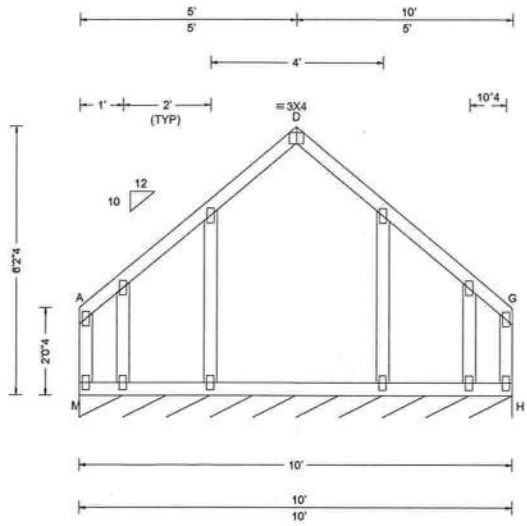

Loading Criteria (psf)	Wind Criteria	Snow Criteria (Pg,Pf in PSF)	Defl/CSI Criteria	▲ Maximum Reactions (lbs), or *=PLF
TCLL: 20.00 TCDL: 10.00 BCLL: 0.00 BCDL: 10.00 Des Ld: 40.00 NCBCLL: 10.00 Soffit: 2.00 Load Duration: 1.25 Spacing: 24.0 "	Wind Std: ASCE 7-10 Speed: 130 mph Enclosure: Closed Risk Category: II EXP: C Mean Height: 15.00 ft TCDL: 5.0 psf BCDL: 5.0 psf MWFRS Parallel Dist: 0 to h/2 C&C Dist a: 3.00 ft Loc. from endwall: Any GCpi: 0.18 Wind Duration: 1.60	Pg: NA Ct: NA CAT: NA Pf: NA Ce: NA Lu: NA Cs: NA Snow Duration: NA **Code / Misc Criteria** Bldg Code: FBC 2014 RES TPI Std: 2007 Rep Factors Used: Yes FT/RT:20(0)/10(0) Plate Type(s): WAVE	PP Deflection in loc L/defl L/# VERT(LL): 0.014 D 999 240 VERT(TL): 0.035 D 999 180 HORZ(LL): -0.068 A - - HORZ(TL): -0.132 A - - Creep Factor: 1.5 Max TC CSI: 0.072 Max BC CSI: 0.040 Max Web CSI: 0.048 VIEW Ver: 16.01.00D.0413.17	Loc R / U / Rw / Rh / RL / W H* 86 / 12 / 49 / - / 12 / 120 Wind reactions based on MWFRS M Min Brg Width Req = - Bearing M is a rigid surface. Members not listed have forces less than 375#

Lumber

Top chord 2x4 SP M-31
Bot chord 2x4 SP M-31
Webs 2x4 SP M-31

Plating Notes

All plates are 2X4 except as noted.

Wind

Wind loads based on MWFRS with additional C&C member design.

End verticals not exposed to wind pressure.

Additional Notes

See DWGS S14015ENC100815 & GBLLETIN1014 for gable wind bracing and other requirements.

DOUGLAS FLEMING
LICENSE
No. 66648
STATE OF
FLORIDA
PROFESSIONAL ENGINEER
#0 278

04/14/2017

****WARNING**** READ AND FOLLOW ALL NOTES ON THIS DRAWING!
****IMPORTANT**** FURNISH THIS DRAWING TO ALL CONTRACTORS INCLUDING THE INSTALLERS

Trusses require extreme care in fabricating, handling, shipping, installing and bracing. Refer to and follow the latest edition of BCSI (Building Component Safety Information, by TPI and SBCA) for safety practices prior to performing these functions. Installers shall provide temporary bracing per BCSI. Unless noted otherwise,top chord shall have properly attached structural sheathing and bottom chord shall have a properly attached rigid ceiling. Locations shown for permanent lateral restraint of webs shall have bracing installed per BCSI sections B3, B7, or B10, as applicable. Apply plates to each face of truss and position as shown above and on the Joint Details, unless noted otherwise. Refer to drawings 160A-Z for standard plate positions.

Alpine, a division of ITW Building Components Group Inc. shall not be responsible for any deviation from this drawing,any failure to build the truss in conformance with ANSI/TPI 1, or for handling, shipping, installation and bracing of trusses**A seal on this drawing or cover page listing this drawing, indicates acceptance of professional engineering responsibility solely for the design shown. The suitability and use of this drawing for any structure is the responsibility of the Building Designer per ANSI/TPI 1 Sec.2.**

For more information see this job's general notes page and these web sites: ALPINE: www.alpineitw.com; TPI: www.tpinst.org; SBCA: www.sbcindustry.com; ICC: www.iccsafe.org

ALPINE
AN ITW COMPANY
2400 Lake Orange Dr.
Suite 150
Orlando FL, 32837

Job Number: 16-0982 HUBBART RESIDENCE **Truss Label:** G09	Ply: 3 Qty: 1	SEQN: 467828 / T93 COMN FROM: CDM	Cust: R215 JRef: 1VZZ2150001 DrwNo: 104.17.1305.42047 KM / DF 04/14/2017

3 Complete Trusses Required

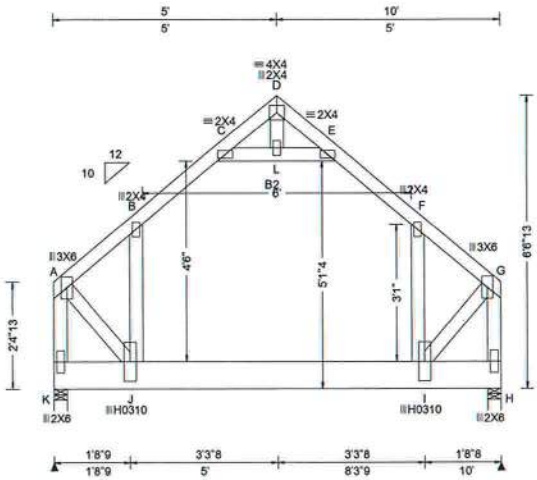

Loading Criteria (psf)
TCLL: 20.00
TCDL: 10.00
BCLL: 0.00
BCDL: 10.00
Des Ld: 40.00
NCBCLL: 0.00
Soffit: 2.00
Load Duration: 1.25
Spacing: 24.0 "

Wind Criteria
Wind Std: ASCE 7-10
Speed: 130 mph
Enclosure: Closed
Risk Category: II
EXP: C
Mean Height: 15.00 ft
TCDL: 5.0 psf
BCDL: 5.0 psf
MWFRS Parallel Dist: 0 to h/2
C&C Dist a: 3.00 ft
Loc. from endwall: Any
GCpi: 0.18
Wind Duration: 1.60

Snow Criteria (Pg,Pf in PSF)
Pg: NA Ct: NA CAT: NA
Pf: NA Ce: NA
Lu: NA Cs: NA
Snow Duration: NA

Code / Misc Criteria
Bldg Code: FBC 2014 RES
TPI Std: 2007
Rep Factors Used: Yes
FT/RT:20(0)/10(0)
Plate Type(s):
WAVE, HS

Defl/CSI Criteria

PP Deflection in	loc	L/defl	L/#
VERT(LL): -0.038	D	999	240
VERT(TL): -0.095	D	999	180
HORZ(LL): -0.063	F	-	-
HORZ(TL): -0.156	F	-	-

Creep Factor: 1.5
Max TC CSI: 0.398
Max BC CSI: 0.178
Max Web CSI: 0.083

VIEW Ver: 16.02.01B.0131.17

▲ Maximum Reactions (lbs)

Loc	R	/ U	/ Rw	/ Rh	/ RL	/ W
K	4689	/ 362	/ -	/ -	/ -	/ 3.5
H	4769	/ 366	/ -	/ -	/ -	/ 3.5

Wind reactions based on MWFRS
K Min Brg Width Req = 1.5
H Min Brg Width Req = 1.5
Bearings K & H are a rigid surface.

Members not listed have forces less than 375#

Maximum Top Chord Forces Per Ply (lbs)

Chords	Tens.	Comp.	Chords	Tens.	Comp.
A - B	73	-951	E - F	53	-506
B - C	53	-506	F - G	73	-953

Maximum Bot Chord Forces Per Ply (lbs)

Chords	Tens.	Comp.
J - I	582	-47

Maximum Web Forces Per Ply (lbs)

Webs	Tens.	Comp.	Webs	Tens.	Comp.
A - K	110	-1425	L - E	57	-909
A - J	872	-69	F - I	647	-16
J - B	643	-16	I - G	874	-70
C - L	57	-909	G - H	110	-1430

Lumber

Top chord 2x4 SP M-31
Bot chord 2x8 SP M-31 :B2 2x4 SP M-31:
Webs 2x4 SP M-31

Nailnote

Nail Schedule:0.131"x3", min. nails
Top Chord: 1 Row @12.00" o.c.
Bot Chord: 1 Row @ 2.00" o.c.
Webs : 1 Row @ 4" o.c.
Repeat nailing as each layer is applied. Use equal spacing between rows and stagger nails in each row to avoid splitting.

Loading

Attic room loading from 2-0-1 to 8-0-1: Live Load: 40 PSF. Dead Load: 10 PSF Ceiling: 10 PSF, Kneewalls: 10 PSF

Purlins

Collar-tie braced with continuous lateral bracing at 24" oc. or rigid ceiling.

Wind

Wind loads and reactions based on MWFRS.

End verticals not exposed to wind pressure.

#0 278
04/14/2017

****WARNING**** READ AND FOLLOW ALL NOTES ON THIS DRAWING!
****IMPORTANT**** FURNISH THIS DRAWING TO ALL CONTRACTORS INCLUDING THE INSTALLERS

Trusses require extreme care in fabricating, handling, shipping, installing and bracing. Refer to and follow the latest edition of BCSI (Building Component Safety Information, by TPI and SBCA) for safety practices prior to performing these functions. Installers shall provide temporary bracing per BCSI. Unless noted otherwise,top chord shall have properly attached structural sheathing and bottom chord shall have a properly attached rigid ceiling. Locations shown for permanent lateral restraint of webs shall have bracing installed per BCSI sections B3, B7, or B10, as applicable. Apply plates to each face of truss and position as shown above and on the Joint Details, unless noted otherwise. Refer to drawings 160A-Z for standard plate positions.

Alpine, a division of ITW Building Components Group Inc. shall not be responsible for any deviation from this drawing,any failure to build the truss in conformance with ANSI/TPI 1, or for handling, shipping, installation and bracing of trusses**A seal on this drawing or cover page listing this drawing, indicates acceptance of professional engineering responsibility solely for the design shown. The suitability and use of this drawing for any structure is the responsibility of the Building Designer per ANSI/TPI 1 Sec.2.**

For more information see this job's general notes page and these web sites: ALPINE: www.alpineitw.com; TPI: www.tpinst.org; SBCA: www.sbcindustry.com; ICC: www.iccsafe.org

ALPINE
AN ITW COMPANY
2400 Lake Orange Dr.
Suite 150
Orlando FL, 32837

Job Number: 16-0982	Ply: 1	SEQN: 455443 / T79 MONO	Cust: R215 JRef: 1VZZ2150001
HUBBART RESIDENCE	Qty: 1	FROM: CDM	DrwNo: 104.17.1305.43470
Truss Label: H01			KM / DF 04/14/2017

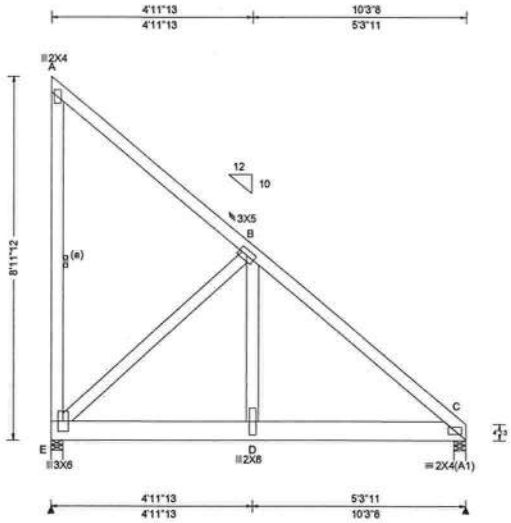

Loading Criteria (psf)

TCLL:	20.00
TCDL:	10.00
BCLL:	0.00
BCDL:	10.00
Des Ld:	40.00
NCBCLL:	10.00
Soffit:	2.00

Load Duration: 1.25
Spacing: 24.0 "

Wind Criteria
Wind Std: ASCE 7-10
Speed: 130 mph
Enclosure: Closed
Risk Category: II
EXP: C
Mean Height: 15.00 ft
TCDL: 5.0 psf
BCDL: 5.0 psf
MWFRS Parallel Dist: 0 to h/2
C&C Dist a: 3.00 ft
Loc. from endwall: not in 4.50 ft
GCpi: 0.18
Wind Duration: 1.60

Snow Criteria (Pg,Pf in PSF)
Pg: NA Ct: NA CAT: NA
Pf: NA Ce: NA
Lu: NA Cs: NA
Snow Duration: NA

Code / Misc Criteria
Bldg Code: FBC 2014 RES
TPI Std: 2007
Rep Factors Used: Yes
FT/RT:20(0)/10(0)
Plate Type(s):
WAVE

Defl/CSI Criteria

PP Deflection in	loc	L/defl	L/#
VERT(LL): 0.008	D	999	240
VERT(TL): 0.019	D	999	180
HORZ(LL): 0.005	A	-	-
HORZ(TL): 0.013	A	-	-

Creep Factor: 1.5
Max TC CSI: 0.124
Max BC CSI: 0.207
Max Web CSI: 0.330

VIEW Ver: 16.01.00D.0413.17

▲ Maximum Reactions (lbs)

Loc	R	/ U	/ Rw	/ Rh	/ RL	/ W
E	799	/ 207	/ -	/ -	/ -	/ 3.5
C	1000	/ 260	/ -	/ -	/ -	/ 3.5

Wind reactions based on MWFRS
E Min Brg Width Req = 1.5
C Min Brg Width Req = 1.5
Bearings E & C are a rigid surface.

Members not listed have forces less than 375#

Maximum Top Chord Forces Per Ply (lbs)

Chords	Tens.	Comp.
B - C	248	-856

Maximum Bot Chord Forces Per Ply (lbs)

Chords	Tens.	Comp.	Chords	Tens.	Comp.
E - D	589	-164	D - C	598	-167

Maximum Web Forces Per Ply (lbs)

Webs	Tens.	Comp.	Webs	Tens.	Comp.
E - B	221	-793	B - D	807	-204

Lumber
Top chord 2x4 SP M-31
Bot chord 2x6 SP M-31
Webs 2x4 SP M-31

Bracing
(a) Continuous lateral restraint equally spaced on member.

Special Loads
------(Lumber Dur.Fac.=1.25 / Plate Dur.Fac.=1.25)
TC- From 33 plf at 0.00 to 33 plf at 7.56
TC- From 66 plf at 7.56 to 66 plf at 10.29
BC- From 10 plf at 0.00 to 10 plf at 10.29
BC- 287 lb Conc. Load at 1.56
BC- 227 lb Conc. Load at 3.56
BC- 233 lb Conc. Load at 5.56
BC- 229 lb Conc. Load at 7.56
BC- 291 lb Conc. Load at 9.56

Wind
Wind loads and reactions based on MWFRS.
Left end vertical not exposed to wind pressure.

Additional Notes
Full Height Blocking reinforcement required to prevent buckling of members over the bearings:
bearing 1 located at 0.00'

#0 278
04/14/2017

****WARNING**** READ AND FOLLOW ALL NOTES ON THIS DRAWING!
****IMPORTANT**** FURNISH THIS DRAWING TO ALL CONTRACTORS INCLUDING THE INSTALLERS

Trusses require extreme care in fabricating, handling, shipping, installing and bracing. Refer to and follow the latest edition of BCSI (Building Component Safety Information, by TPI and SBCA) for safety practices prior to performing these functions. Installers shall provide temporary bracing per BCSI. Unless noted otherwise,top chord shall have properly attached structural sheathing and bottom chord shall have a properly attached rigid ceiling. Locations shown for permanent lateral restraint of webs shall have bracing installed per BCSI sections B3, B7, or B10, as applicable. Apply plates to each face of truss and position as shown above and on the Joint Details, unless noted otherwise. Refer to drawings 160A-Z for standard plate positions.

Alpine, a division of ITW Building Components Group Inc. shall not be responsible for any deviation from this drawing,any failure to build the truss in conformance with ANSI/TPI 1, or for handling, shipping, installation and bracing of trusses**A seal on this drawing or cover page listing this drawing, indicates acceptance of professional engineering responsibility solely for the design shown. The suitability and use of this drawing for any structure is the responsibility of the Building Designer per ANSI/TPI 1 Sec.2.**

For more information see this job's general notes page and these web sites: ALPINE: www.alpineitw.com; TPI: www.tpinst.org; SBCA: www.sbcindustry.com; ICC: www.iccsafe.org

ALPINE
AN ITW COMPANY
2400 Lake Orange Dr.
Suite 150
Orlando FL, 32837

Job Number: 16-0982 HUBBART RESIDENCE **Truss Label:** H02	Ply: 1 Qty: 1	SEQN: 468442 / T61 MONO FROM: CDM	Cust: R215 JRef: 1VZZ2150001 DrwNo: 104.17.1305.44710 KM / DF 04/14/2017

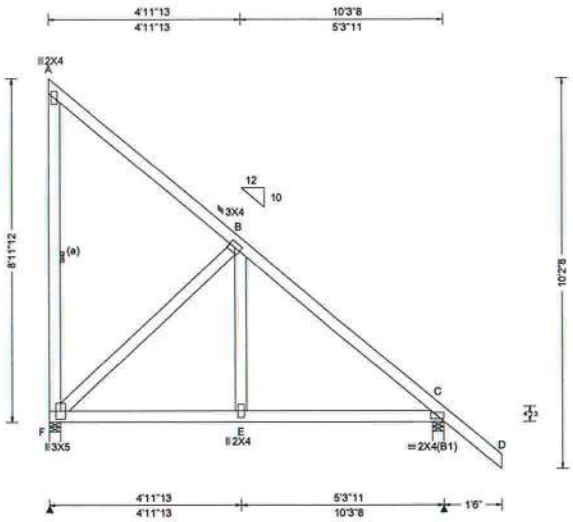

Loading Criteria (psf)
TCLL: 20.00
TCDL: 10.00
BCLL: 0.00
BCDL: 10.00
Des Ld: 40.00
NCBCLL: 10.00
Soffit: 2.00
Load Duration: 1.25
Spacing: 24.0 "

Wind Criteria
Wind Std: ASCE 7-10
Speed: 130 mph
Enclosure: Closed
Risk Category: II
EXP: C
Mean Height: 15.00 ft
TCDL: 5.0 psf
BCDL: 5.0 psf
MWFRS Parallel Dist: 0 to h/2
C&C Dist a: 3.00 ft
Loc. from endwall: Any
GCpi: 0.18
Wind Duration: 1.60

Snow Criteria (Pg,Pf in PSF)
Pg: NA Ct: NA CAT: NA
Pf: NA Ce: NA
Lu: NA Cs: NA
Snow Duration: NA

Code / Misc Criteria
Bldg Code: FBC 2014 RES
TPI Std: 2007
Rep Factors Used: Yes
FT/RT:20(0)/10(0)
Plate Type(s):
WAVE

Defl/CSI Criteria

PP Deflection in	loc	L/defl	L/#
VERT(LL): 0.003	E	999	240
VERT(TL): 0.009	E	999	180
HORZ(LL): 0.005	A	-	-
HORZ(TL): 0.008	A	-	-

Creep Factor: 1.5
Max TC CSI: 0.170
Max BC CSI: 0.129
Max Web CSI: 0.166

VIEW Ver: 16.02.01B.0131.17

▲ Maximum Reactions (lbs)

Loc	R	/ U	/ Rw	/ Rh	/ RL	/ W
F	427	/ 165	/ 359	/ -	/ 279	/ 3.5
C	565	/ -	/ 352	/ -	/ -	/ 3.5

Wind reactions based on MWFRS
F Min Brg Width Req = 1.5
C Min Brg Width Req = 1.5
Bearings F & C are a rigid surface.

Members not listed have forces less than 375#

Maximum Top Chord Forces Per Ply (lbs)

Chords	Tens.	Comp.
B - C	0	-471

Maximum Bot Chord Forces Per Ply (lbs)

Chords	Tens.	Comp.	Chords	Tens.	Comp.
F - E	380	0	E - C	382	0

Maximum Web Forces Per Ply (lbs)

Webs	Tens.	Comp.
F - B	255	-385

Lumber
Top chord 2x4 SP M-31
Bot chord 2x4 SP M-31
Webs 2x4 SP M-31

Bracing
(a) Continuous lateral restraint equally spaced on member.

Wind
Wind loads based on MWFRS with additional C&C member design.
Left end vertical not exposed to wind pressure.

Additional Notes
Full Height Blocking reinforcement required to prevent buckling of members over the bearings: bearing 1 located at 0.00'

#0 278
04/14/2017

****WARNING**** READ AND FOLLOW ALL NOTES ON THIS DRAWING!
****IMPORTANT**** FURNISH THIS DRAWING TO ALL CONTRACTORS INCLUDING THE INSTALLERS

Trusses require extreme care in fabricating, handling, shipping, installing and bracing. Refer to and follow the latest edition of BCSI (Building Component Safety Information, by TPI and SBCA) for safety practices prior to performing these functions. Installers shall provide temporary bracing per BCSI. Unless noted otherwise,top chord shall have properly attached structural sheathing and bottom chord shall have a properly attached rigid ceiling. Locations shown for permanent lateral restraint of webs shall have bracing installed per BCSI sections B3, B7, or B10, as applicable. Apply plates to each face of truss and position as shown above and on the Joint Details, unless noted otherwise. Refer to drawings 160A-Z for standard plate positions.

Alpine, a division of ITW Building Components Group Inc. shall not be responsible for any deviation from this drawing,any failure to build the truss in conformance with ANSI/TPI 1, or for handling, shipping, installation and bracing of trusses**A seal on this drawing or cover page listing this drawing, indicates acceptance of professional engineering responsibility solely for the design shown. The suitability and use of this drawing for any structure is the responsibility of the Building Designer per ANSI/TPI 1 Sec.2.**

For more information see this job's general notes page and these web sites: ALPINE: www.alpineitw.com; TPI: www.tpinst.org; SBCA: www.sbcindustry.com; ICC: www.iccsafe.org

ALPINE
AN ITW COMPANY
2400 Lake Orange Dr.
Suite 150
Orlando FL, 32837

Job Number: 16-0982 HUBBART RESIDENCE **Truss Label:** J01	Ply: 1 Qty: 2	SEQN: 468421 / T27 HIP_ FROM: CDM	Cust: R215 JRef: 1VZZ2150001 DrwNo: 104.17.1305.45783 KM / DF 04/14/2017

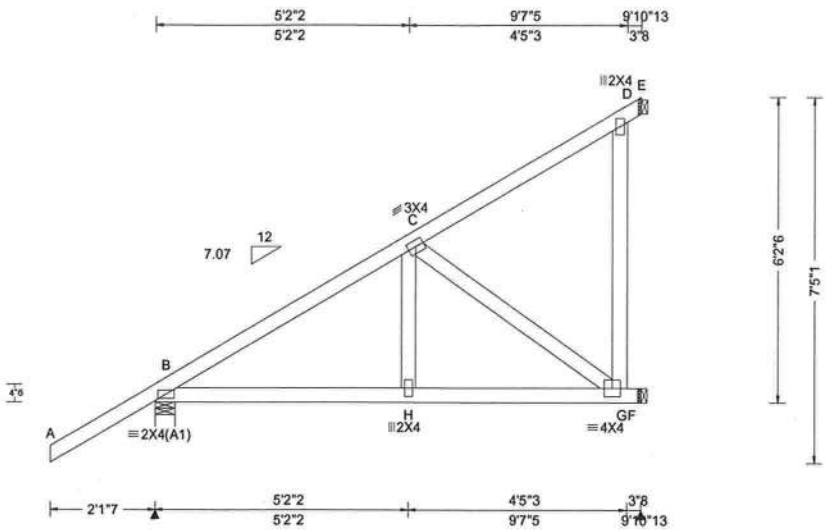

Loading Criteria (psf)

TCLL:	20.00
TCDL:	10.00
BCLL:	0.00
BCDL:	10.00
Des Ld:	40.00
NCBCLL:	10.00
Soffit:	2.00

Load Duration: 1.25
Spacing: 24.0 "

Wind Criteria
Wind Std: ASCE 7-10
Speed: 130 mph
Enclosure: Closed
Risk Category: II
EXP: C
Mean Height: 15.00 ft
TCDL: 5.0 psf
BCDL: 5.0 psf
MWFRS Parallel Dist: 0 to h/2
C&C Dist a: 3.00 ft
Loc. from endwall: not in 4.50 ft
GCpi: 0.18
Wind Duration: 1.60

Snow Criteria (Pg,Pf in PSF)
Pg: NA Ct: NA CAT: NA
Pf: NA Ce: NA
Lu: NA Cs: NA
Snow Duration: NA

Code / Misc Criteria
Bldg Code: FBC 2014 RES
TPI Std: 2007
Rep Factors Used: Yes
FT/RT:20(0)/10(0)
Plate Type(s):
WAVE

Defl/CSI Criteria

PP Deflection in	loc	L/defl	L/#
VERT(LL): 0.012	H	999	240
VERT(TL): 0.028	H	999	180
HORZ(LL): 0.003	C	-	-
HORZ(TL): 0.008	C	-	-

Creep Factor: 1.5
Max TC CSI: 0.252
Max BC CSI: 0.248
Max Web CSI: 0.145

VIEW Ver: 16.02.01B.0131.17

▲ Maximum Reactions (lbs)

Loc	R	/ U	/ Rw	/ Rh	/ RL	/ W
B	383	/ 272	/ -	/ -	/ -	/ 4.9
F	314	/ 160	/ -	/ -	/ -	/ 1.5
E	154	/ -	/ 17	/ -	/ -	/ 1.5

Wind reactions based on MWFRS
B Min Brg Width Req = 1.5
F Min Brg Width Req = -
E Min Brg Width Req = -
Bearing B is a rigid surface.

Members not listed have forces less than 375#

Maximum Top Chord Forces Per Ply (lbs)

Chords	Tens.	Comp.
B - C	274	- 487

Maximum Bot Chord Forces Per Ply (lbs)

Chords	Tens.	Comp.	Chords	Tens.	Comp.
B - H	433	- 181	H - G	428	- 180

Maximum Web Forces Per Ply (lbs)

Webs	Tens.	Comp.
C - G	222	- 527

Lumber
Top chord 2x4 SP M-31
Bot chord 2x4 SP M-31
Webs 2x4 SP M-31

Special Loads
------(Lumber Dur.Fac.=1.25 / Plate Dur.Fac.=1.25)

TC- From	0 plf at	-2.12 to	63 plf at	0.00
TC- From	2 plf at	0.00 to	2 plf at	9.90
BC- From	0 plf at	-2.12 to	5 plf at	0.00
BC- From	2 plf at	0.00 to	2 plf at	9.90

TC- -56 lb Conc. Load at 1.48
TC- 131 lb Conc. Load at 4.31
TC- 272 lb Conc. Load at 7.13
BC- 15 lb Conc. Load at 1.48
BC- 103 lb Conc. Load at 4.31
BC- 185 lb Conc. Load at 7.13

Wind
Wind loads and reactions based on MWFRS.

DOUGLAS FLEMING
LICENSE
No. 66648
STATE OF
FLORIDA
PROFESSIONAL ENGINEER

#0 278
04/14/2017

****WARNING**** READ AND FOLLOW ALL NOTES ON THIS DRAWING!
****IMPORTANT**** FURNISH THIS DRAWING TO ALL CONTRACTORS INCLUDING THE INSTALLERS

Trusses require extreme care in fabricating, handling, shipping, installing and bracing. Refer to and follow the latest edition of BCSI (Building Component Safety Information, by TPI and SBCA) for safety practices prior to performing these functions. Installers shall provide temporary bracing per BCSI. Unless noted otherwise,top chord shall have properly attached structural sheathing and bottom chord shall have a properly attached rigid ceiling. Locations shown for permanent lateral restraint of webs shall have bracing installed per BCSI sections B3, B7, or B10, as applicable. Apply plates to each face of truss and position as shown above and on the Joint Details, unless noted otherwise. Refer to drawings 160A-Z for standard plate positions.

Alpine, a division of ITW Building Components Group Inc. shall not be responsible for any deviation from this drawing,any failure to build the truss in conformance with ANSI/TPI 1, or for handling, shipping, installation and bracing of trusses**A seal on this drawing or cover page listing this drawing, indicates acceptance of professional engineering responsibility solely for the design shown. The suitability and use of this drawing for any structure is the responsibility of the Building Designer per ANSI/TPI 1 Sec.2.**

For more information see this job's general notes page and these web sites: ALPINE: www.alpineitw.com; TPI: www.tpinst.org; SBCA: www.sbcindustry.com; ICC: www.iccsafe.org

ALPINE
AN ITW COMPANY
2400 Lake Orange Dr.
Suite 150
Orlando FL, 32837

Job Number: 16-0982 HUBBART RESIDENCE **Truss Label:** J01A	Ply: 1 Qty: 1	SEQN: 468424 / T104 HIP_ FROM: CDM	Cust: R215 JRef: 1VZZ2150001 DrwNo: 104.17.1305.46887 KM / DF 04/14/2017

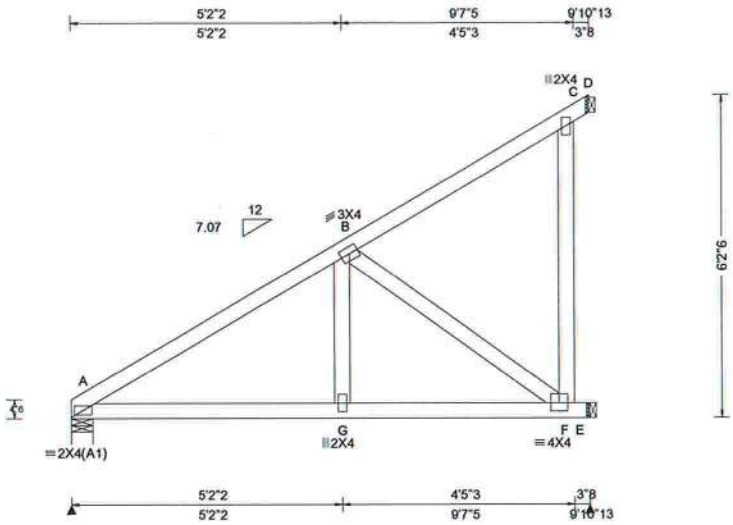

Loading Criteria (psf)

TCLL:	20.00
TCDL:	10.00
BCLL:	0.00
BCDL:	10.00
Des Ld:	40.00
NCBCLL:	10.00
Soffit:	2.00

Load Duration: 1.25
Spacing: 24.0 "

Wind Criteria
Wind Std: ASCE 7-10
Speed: 130 mph
Enclosure: Closed
Risk Category: II
EXP: C
Mean Height: 15.00 ft
TCDL: 5.0 psf
BCDL: 5.0 psf
MWFRS Parallel Dist: 0 to h/2
C&C Dist a: 3.00 ft
Loc. from endwall: not in 4.50 ft
GCpi: 0.18
Wind Duration: 1.60

Snow Criteria (Pg,Pf in PSF)
Pg: NA Ct: NA CAT: NA
Pf: NA Ce: NA
Lu: NA Cs: NA
Snow Duration: NA

Code / Misc Criteria
Bldg Code: FBC 2014 RES
TPI Std: 2007
Rep Factors Used: Yes
FT/RT:20(0)/10(0)
Plate Type(s):
WAVE

Defl/CSI Criteria

PP Deflection in	loc	L/defl	L/#
VERT(LL): 0.011	G	999	240
VERT(TL): 0.029	G	999	180
HORZ(LL): 0.004	B	-	-
HORZ(TL): 0.009	B	-	-

Creep Factor: 1.5
Max TC CSI: 0.251
Max BC CSI: 0.252
Max Web CSI: 0.162

VIEW Ver: 16.02.01B.0131.17

▲ Maximum Reactions (lbs)

Loc	R	/ U	/ Rw	/ Rh	/ RL	/ W
A	318	/ 161	/ -	/ -	/ -	/ 4.9
E	329	/ 164	/ -	/ -	/ -	/ 1.5
D	159	/ -	/ 22	/ -	/ -	/ 1.5

Wind reactions based on MWFRS
A Min Brg Width Req = 1.5
E Min Brg Width Req = -
D Min Brg Width Req = -
Bearing A is a rigid surface.

Members not listed have forces less than 375#

Maximum Top Chord Forces Per Ply (lbs)

Chords	Tens.	Comp.
A - B	226	-554

Maximum Bot Chord Forces Per Ply (lbs)

Chords	Tens.	Comp.	Chords	Tens.	Comp.
A - G	483	-168	G - F	477	-168

Maximum Web Forces Per Ply (lbs)

Webs	Tens.	Comp.
B - F	207	-588

Lumber
Top chord 2x4 SP M-31
Bot chord 2x4 SP M-31
Webs 2x4 SP M-31

Special Loads
------(Lumber Dur.Fac.=1.25 / Plate Dur.Fac.=1.25)
TC- From 0 plf at -1.89 to 63 plf at 0.00
TC- From 2 plf at 0.00 to 2 plf at 9.90
BC- From 0 plf at -1.89 to 5 plf at 0.00
BC- From 2 plf at 0.00 to 2 plf at 9.90
TC- -28 lb Conc. Load at 1.48
TC- 153 lb Conc. Load at 4.31
TC- 284 lb Conc. Load at 7.13
BC- 8 lb Conc. Load at 1.48
BC- 108 lb Conc. Load at 4.31
BC- 188 lb Conc. Load at 7.13

Wind
Wind loads and reactions based on MWFRS.

#0 278
04/14/2017

****WARNING**** READ AND FOLLOW ALL NOTES ON THIS DRAWING!
****IMPORTANT**** FURNISH THIS DRAWING TO ALL CONTRACTORS INCLUDING THE INSTALLERS

Trusses require extreme care in fabricating, handling, shipping, installing and bracing. Refer to and follow the latest edition of BCSI (Building Component Safety Information, by TPI and SBCA) for safety practices prior to performing these functions. Installers shall provide temporary bracing per BCSI. Unless noted otherwise,top chord shall have properly attached structural sheathing and bottom chord shall have a properly attached rigid ceiling. Locations shown for permanent lateral restraint of webs shall have bracing installed per BCSI sections B3, B7, or B10, as applicable. Apply plates to each face of truss and position as shown above and on the Joint Details, unless noted otherwise. Refer to drawings 160A-Z for standard plate positions.

Alpine, a division of ITW Building Components Group Inc. shall not be responsible for any deviation from this drawing,any failure to build the truss in conformance with ANSI/TPI 1, or for handling, shipping, installation and bracing of trusses**A seal on this drawing or cover page listing this drawing, indicates acceptance of professional engineering responsibility solely for the design shown. The suitability and use of this drawing for any structure is the responsibility of the Building Designer per ANSI/TPI 1 Sec.2.**

For more information see this job's general notes page and these web sites: ALPINE: www.alpineitw.com; TPI: www.tpinst.org; SBCA: www.sbcindustry.com; ICC: www.iccsafe.org

ALPINE
AN ITW COMPANY
2400 Lake Orange Dr.
Suite 150
Orlando FL, 32837

Job Number: 16-0982 HUBBART RESIDENCE **Truss Label:** J02	Ply: 1 Qty: 6	SEQN: 468413 / T34 JACK FROM: CDM	Cust: R215 JRef: 1VZZ2150001 DrwNo: 104.17.1305.48353 KM / DF 04/14/2017

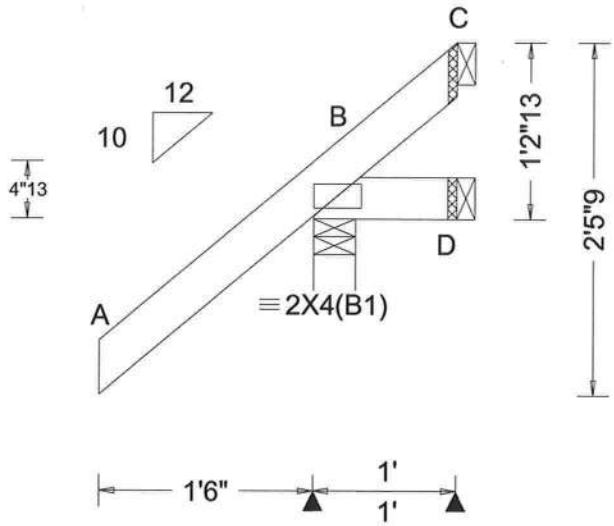

Loading Criteria (psf)
TCLL: 20.00
TCDL: 10.00
BCLL: 0.00
BCDL: 10.00
Des Ld: 40.00
NCBCLL: 10.00
Soffit: 2.00
Load Duration: 1.25
Spacing: 24.0 "

Wind Criteria
Wind Std: ASCE 7-10
Speed: 130 mph
Enclosure: Closed
Risk Category: II
EXP: C
Mean Height: 15.00 ft
TCDL: 5.0 psf
BCDL: 5.0 psf
MWFRS Parallel Dist: 0 to h/2
C&C Dist a: 3.00 ft
Loc. from endwall: Any
GCpi: 0.18
Wind Duration: 1.60

Snow Criteria (Pg,Pf in PSF)
Pg: NA Ct: NA CAT: NA
Pf: NA Ce: NA
Lu: NA Cs: NA
Snow Duration: NA

Code / Misc Criteria
Bldg Code: FBC 2014 RES
TPI Std: 2007
Rep Factors Used: Yes
FT/RT:20(0)/10(0)
Plate Type(s):
WAVE

Defl/CSI Criteria
PP Deflection in loc L/defl L/#
VERT(LL): NA
VERT(TL): NA
HORZ(LL): -0.001 D - -
HORZ(TL): -0.001 D - -
Creep Factor: 1.5
Max TC CSI: 0.080
Max BC CSI: 0.010
Max Web CSI: 0.000

VIEW Ver: 16.02.01B.0131.17

▲ Maximum Reactions (lbs)

Loc	R	/ U	/ Rw	/ Rh	/ RL	/ W
B	269	/ 61	/ 250	/ -	/ 58	/ 3.5
D	8	/ 17	/ 15	/ -	/ -	/ 1.5
C	-65	/ 83	/ 40	/ -	/ -	/ 1.5

Wind reactions based on MWFRS
B Min Brg Width Req = 1.5
D Min Brg Width Req = -
C Min Brg Width Req = -
Bearing B is a rigid surface.

Members not listed have forces less than 375#

Lumber
Top chord 2x4 SP M-31
Bot chord 2x4 SP M-31

Wind
Wind loads based on MWFRS with additional C&C member design.

#0 278
04/14/2017

****WARNING**** READ AND FOLLOW ALL NOTES ON THIS DRAWING!
****IMPORTANT**** FURNISH THIS DRAWING TO ALL CONTRACTORS INCLUDING THE INSTALLERS

Trusses require extreme care in fabricating, handling, shipping, installing and bracing. Refer to and follow the latest edition of BCSI (Building Component Safety Information, by TPI and SBCA) for safety practices prior to performing these functions. Installers shall provide temporary bracing per BCSI. Unless noted otherwise,top chord shall have properly attached structural sheathing and bottom chord shall have a properly attached rigid ceiling. Locations shown for permanent lateral restraint of webs shall have bracing installed per BCSI sections B3, B7, or B10, as applicable. Apply plates to each face of truss and position as shown above and on the Joint Details, unless noted otherwise. Refer to drawings 160A-Z for standard plate positions.

Alpine, a division of ITW Building Components Group Inc. shall not be responsible for any deviation from this drawing,any failure to build the truss in conformance with ANSI/TPI 1, or for handling, shipping, installation and bracing of trusses**A seal on this drawing or cover page listing this drawing, indicates acceptance of professional engineering responsibility solely for the design shown. The suitability and use of this drawing for any structure is the responsibility of the Building Designer per ANSI/TPI 1 Sec.2.**

For more information see this job's general notes page and these web sites: ALPINE: www.alpineitw.com; TPI: www.tpinst.org; SBCA: www.sbcindustry.com; ICC: www.iccsafe.org

ALPINE
AN ITW COMPANY
2400 Lake Orange Dr.
Suite 150
Orlando FL, 32837

Job Number: 16-0982 HUBBART RESIDENCE **Truss Label:** J03	Ply: 1 Qty: 5	SEQN: 468415 / T33 JACK FROM: CDM	Cust: R215 JRef: 1VZZ2150001 DrwNo: 104.17.1305.50790 KM / DF 04/14/2017

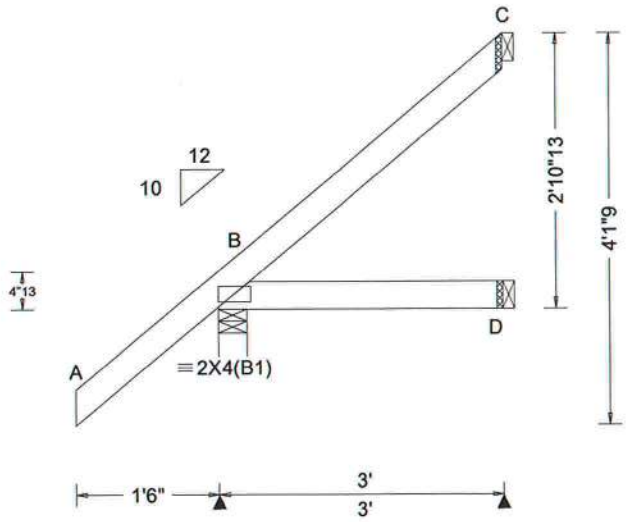

Loading Criteria (psf)
TCLL: 20.00
TCDL: 10.00
BCLL: 0.00
BCDL: 10.00
Des Ld: 40.00
NCBCLL: 10.00
Soffit: 2.00
Load Duration: 1.25
Spacing: 24.0 "

Wind Criteria
Wind Std: ASCE 7-10
Speed: 130 mph
Enclosure: Closed
Risk Category: II
EXP: C
Mean Height: 15.00 ft
TCDL: 5.0 psf
BCDL: 5.0 psf
MWFRS Parallel Dist: 0 to h/2
C&C Dist a: 3.00 ft
Loc. from endwall: Any
GCpi: 0.18
Wind Duration: 1.60

Snow Criteria (Pg,Pf in PSF)
Pg: NA Ct: NA CAT: NA
Pf: NA Ce: NA
Lu: NA Cs: NA
Snow Duration: NA

Code / Misc Criteria
Bldg Code: FBC 2014 RES
TPI Std: 2007
Rep Factors Used: Yes
FT/RT:20(0)/10(0)
Plate Type(s):
WAVE

Defl/CSI Criteria
PP Deflection in loc L/defl L/#
VERT(LL): NA
VERT(TL): NA
HORZ(LL): -0.001 D - -
HORZ(TL): 0.001 D - -
Creep Factor: 1.5
Max TC CSI: 0.086
Max BC CSI: 0.031
Max Web CSI: 0.000

VIEW Ver: 16.02.01B.0131.17

▲ Maximum Reactions (lbs)

Loc	R	/ U	/ Rw	/ Rh	/ RL	/ W
B	276	/ 22	/ 218	/ -	/ 106	/ 3.5
D	52	/ 1	/ 40	/ -	/ -	/ 1.5
C	65	/ 39	/ 37	/ -	/ -	/ 1.5

Wind reactions based on MWFRS
B Min Brg Width Req = 1.5
D Min Brg Width Req = -
C Min Brg Width Req = -
Bearing B is a rigid surface.

Members not listed have forces less than 375#

Lumber
Top chord 2x4 SP M-31
Bot chord 2x4 SP M-31

Wind
Wind loads based on MWFRS with additional C&C member design.

#0 278
04/14/2017

****WARNING**** READ AND FOLLOW ALL NOTES ON THIS DRAWING!
****IMPORTANT**** FURNISH THIS DRAWING TO ALL CONTRACTORS INCLUDING THE INSTALLERS

Trusses require extreme care in fabricating, handling, shipping, installing and bracing. Refer to and follow the latest edition of BCSI (Building Component Safety Information, by TPI and SBCA) for safety practices prior to performing these functions. Installers shall provide temporary bracing per BCSI. Unless noted otherwise,top chord shall have properly attached structural sheathing and bottom chord shall have a properly attached rigid ceiling. Locations shown for permanent lateral restraint of webs shall have bracing installed per BCSI sections B3, B7, or B10, as applicable. Apply plates to each face of truss and position as shown above and on the Joint Details, unless noted otherwise. Refer to drawings 160A-Z for standard plate positions.

Alpine, a division of ITW Building Components Group Inc. shall not be responsible for any deviation from this drawing,any failure to build the truss in conformance with ANSI/TPI 1, or for handling, shipping, installation and bracing of trusses**A seal on this drawing or cover page listing this drawing, indicates acceptance of professional engineering responsibility solely for the design shown. The suitability and use of this drawing for any structure is the responsibility of the Building Designer per ANSI/TPI 1 Sec.2.**

For more information see this job's general notes page and these web sites: ALPINE: www.alpineitw.com; TPI: www.tpinst.org; SBCA: www.sbcindustry.com; ICC: www.iccsafe.org

ALPINE
AN ITW COMPANY
2400 Lake Orange Dr.
Suite 150
Orlando FL, 32837

Job Number: 16-0982 HUBBART RESIDENCE **Truss Label:** J03A	Ply: 1 Qty: 1	SEQN: 468246 / T101 JACK FROM: CDM	Cust: R215 JRef: 1VZZ2150001 DrwNo: 104.17.1305.53703 KM / DF 04/14/2017

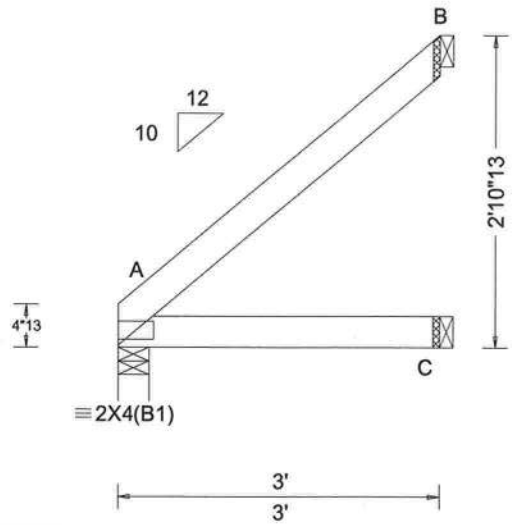

Loading Criteria (psf)

TCLL:	20.00
TCDL:	10.00
BCLL:	0.00
BCDL:	10.00
Des Ld:	40.00
NCBCLL:	10.00
Soffit:	2.00

Load Duration: 1.25
Spacing: 24.0 "

Wind Criteria
Wind Std: ASCE 7-10
Speed: 130 mph
Enclosure: Closed
Risk Category: II
EXP: C
Mean Height: 15.00 ft
TCDL: 5.0 psf
BCDL: 5.0 psf
MWFRS Parallel Dist: 0 to h/2
C&C Dist a: 3.00 ft
Loc. from endwall: Any
GCpi: 0.18
Wind Duration: 1.60

Snow Criteria (Pg,Pf in PSF)
Pg: NA Ct: NA CAT: NA
Pf: NA Ce: NA
Lu: NA Cs: NA
Snow Duration: NA

Code / Misc Criteria
Bldg Code: FBC 2014 RES
TPI Std: 2007
Rep Factors Used: Yes
FT/RT:20(0)/10(0)
Plate Type(s):
WAVE

Defl/CSI Criteria

PP Deflection in	loc	L/defl	L/#
VERT(LL): NA			
VERT(TL): NA			
HORZ(LL): 0.001	C	-	-
HORZ(TL): 0.002	C	-	-

Creep Factor: 1.5
Max TC CSI: 0.051
Max BC CSI: 0.037
Max Web CSI: 0.000

VIEW Ver: 16.02.01B.0131.17

▲ Maximum Reactions (lbs)

Loc	R	/ U	/ Rw	/ Rh	/ RL	/ W
A	136	/ -	/ 86	/ -	/ 69	/ 3.5
C	56	/ 1	/ 42	/ -	/ -	/ 1.5
B	88	/ 48	/ 62	/ -	/ -	/ 1.5

Wind reactions based on MWFRS
A Min Brg Width Req = 1.5
C Min Brg Width Req = -
B Min Brg Width Req = -
Bearing A is a rigid surface.

Members not listed have forces less than 375#

Lumber
Top chord 2x4 SP M-31
Bot chord 2x4 SP M-31

Wind
Wind loads based on MWFRS with additional C&C member design.

#0 278
04/14/2017

****WARNING**** READ AND FOLLOW ALL NOTES ON THIS DRAWING!
****IMPORTANT**** FURNISH THIS DRAWING TO ALL CONTRACTORS INCLUDING THE INSTALLERS

Trusses require extreme care in fabricating, handling, shipping, installing and bracing. Refer to and follow the latest edition of BCSI (Building Component Safety Information, by TPI and SBCA) for safety practices prior to performing these functions. Installers shall provide temporary bracing per BCSI. Unless noted otherwise,top chord shall have properly attached structural sheathing and bottom chord shall have a properly attached rigid ceiling. Locations shown for permanent lateral restraint of webs shall have bracing installed per BCSI sections B3, B7, or B10, as applicable. Apply plates to each face of truss and position as shown above and on the Joint Details, unless noted otherwise. Refer to drawings 160A-Z for standard plate positions.

Alpine, a division of ITW Building Components Group Inc. shall not be responsible for any deviation from this drawing,any failure to build the truss in conformance with ANSI/TPI 1, or for handling, shipping, installation and bracing of trusses**A seal on this drawing or cover page listing this drawing, indicates acceptance of professional engineering responsibility solely for the design shown. The suitability and use of this drawing for any structure is the responsibility of the Building Designer per ANSI/TPI 1 Sec.2.**

For more information see this job's general notes page and these web sites: ALPINE: www.alpineitw.com; TPI: www.tpinst.org; SBCA: www.sbcindustry.com; ICC: www.iccsafe.org

ALPINE AN ITW COMPANY
2400 Lake Orange Dr.
Suite 150
Orlando FL, 32837

Job Number: 16-0982 HUBBART RESIDENCE **Truss Label:** J04	Ply: 1 Qty: 5	SEQN: 468417 / T32 JACK FROM: CDM	Cust: R215 JRef: 1VZZ2150001 DrwNo: 104.17.1305.55300 KM / DF 04/14/2017

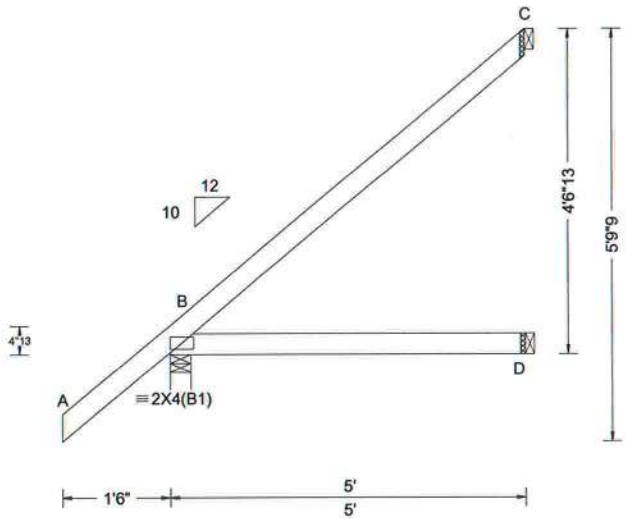

Loading Criteria (psf)	**Wind Criteria**	**Snow Criteria** (Pg,Pf in PSF)	**Defl/CSI Criteria**	**▲Maximum Reactions (lbs)**
TCLL: 20.00 TCDL: 10.00 BCLL: 0.00 BCDL: 10.00 Des Ld: 40.00 NCBCLL: 10.00 Soffit: 2.00 Load Duration: 1.25 Spacing: 24.0 "	Wind Std: ASCE 7-10 Speed: 130 mph Enclosure: Closed Risk Category: II EXP: C Mean Height: 15.00 ft TCDL: 5.0 psf BCDL: 5.0 psf MWFRS Parallel Dist: 0 to h/2 C&C Dist a: 3.00 ft Loc. from endwall: not in 4.50 ft GCpi: 0.18 Wind Duration: 1.60	Pg: NA Ct: NA CAT: NA Pf: NA Ce: NA Lu: NA Cs: NA Snow Duration: NA **Code / Misc Criteria** Bldg Code: FBC 2014 RES TPI Std: 2007 Rep Factors Used: Yes FT/RT:20(0)/10(0) Plate Type(s): WAVE	PP Deflection in loc L/defl L/# VERT(LL): NA VERT(TL): NA HORZ(LL): 0.003 D - - HORZ(TL): 0.007 D - - Creep Factor: 1.5 Max TC CSI: 0.133 Max BC CSI: 0.102 Max Web CSI: 0.000 VIEW Ver: 16.02.01B.0131.17	

Loc	R	/ U	/ Rw	/ Rh	/ RL	/ W
B	348	/ 9	/ 259	/ -	/ 154	/ 3.5
D	92	/ -	/ 66	/ -	/ -	/ 1.5
C	136	/ 74	/ 90	/ -	/ -	/ 1.5

Wind reactions based on MWFRS
B Min Brg Width Req = 1.5
D Min Brg Width Req = -
C Min Brg Width Req = -
Bearing B is a rigid surface.

Members not listed have forces less than 375#

Lumber

Top chord 2x4 SP M-31
Bot chord 2x4 SP M-31

Wind

Wind loads based on MWFRS with additional C&C member design.

#0 278

04/14/2017

****WARNING**** READ AND FOLLOW ALL NOTES ON THIS DRAWING!
****IMPORTANT**** FURNISH THIS DRAWING TO ALL CONTRACTORS INCLUDING THE INSTALLERS

Trusses require extreme care in fabricating, handling, shipping, installing and bracing. Refer to and follow the latest edition of BCSI (Building Component Safety Information, by TPI and SBCA) for safety practices prior to performing these functions. Installers shall provide temporary bracing per BCSI. Unless noted otherwise,top chord shall have properly attached structural sheathing and bottom chord shall have a properly attached rigid ceiling. Locations shown for permanent lateral restraint of webs shall have bracing installed per BCSI sections B3, B7, or B10, as applicable. Apply plates to each face of truss and position as shown above and on the Joint Details, unless noted otherwise. Refer to drawings 160A-Z for standard plate positions.

Alpine, a division of ITW Building Components Group Inc. shall not be responsible for any deviation from this drawing,any failure to build the truss in conformance with ANSI/TPI 1, or for handling, shipping, installation and bracing of trusses**A seal on this drawing or cover page listing this drawing, indicates acceptance of professional engineering responsibility solely for the design shown. The suitability and use of this drawing for any structure is the responsibility of the Building Designer per ANSI/TPI 1 Sec.2.**

For more information see this job's general notes page and these web sites: ALPINE: www.alpineitw.com; TPI: www.tpinst.org; SBCA: www.sbcindustry.com; ICC: www.iccsafe.org

ALPINE
AN ITW COMPANY
2400 Lake Orange Dr.
Suite 150
Orlando FL, 32837

Job Number: 16-0982 HUBBART RESIDENCE **Truss Label:** J04A	Ply: 1 Qty: 1	SEQN: 468248 / T99 JACK FROM: CDM	Cust: R215 JRef: 1VZZ2150001 DrwNo: 104.17.1305.56540 KM / DF 04/14/2017

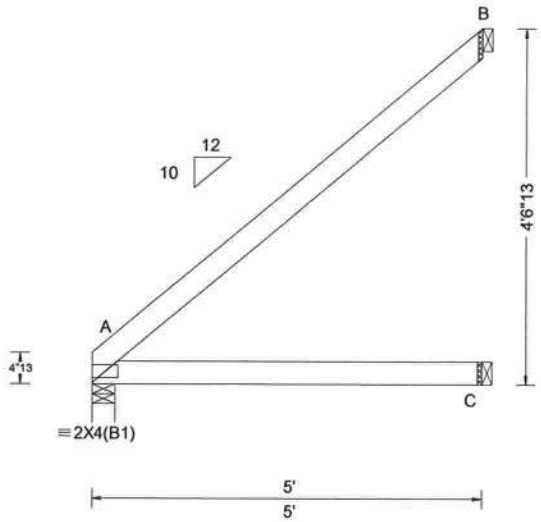

Loading Criteria (psf)
TCLL: 20.00
TCDL: 10.00
BCLL: 0.00
BCDL: 10.00
Des Ld: 40.00
NCBCLL: 10.00
Soffit: 2.00
Load Duration: 1.25
Spacing: 24.0 "

Wind Criteria
Wind Std: ASCE 7-10
Speed: 130 mph
Enclosure: Closed
Risk Category: II
EXP: C
Mean Height: 15.00 ft
TCDL: 5.0 psf
BCDL: 5.0 psf
MWFRS Parallel Dist: 0 to h/2
C&C Dist a: 3.00 ft
Loc. from endwall: not in 4.50 ft
GCpi: 0.18
Wind Duration: 1.60

Snow Criteria (Pg,Pf in PSF)
Pg: NA Ct: NA CAT: NA
Pf: NA Ce: NA
Lu: NA Cs: NA
Snow Duration: NA

Code / Misc Criteria
Bldg Code: FBC 2014 RES
TPI Std: 2007
Rep Factors Used: Yes
FT/RT:20(0)/10(0)
Plate Type(s):
WAVE

Defl/CSI Criteria

PP Deflection in	loc	L/defl	L/#
VERT(LL): NA			
VERT(TL): NA			
HORZ(LL): 0.004	C	-	-
HORZ(TL): 0.011	C	-	-

Creep Factor: 1.5
Max TC CSI: 0.158
Max BC CSI: 0.110
Max Web CSI: 0.000

VIEW Ver: 16.02.01B.0131.17

▲Maximum Reactions (lbs)

Loc	R	/ U	/ Rw	/ Rh	/ RL	/ W
A	222	/ -	/ 143	/ -	/ 117	/ 3.5
C	96	/ 3	/ 71	/ -	/ -	/ 1.5
B	148	/ 79	/ 103	/ -	/ -	/ 1.5

Wind reactions based on MWFRS
A Min Brg Width Req = 1.5
C Min Brg Width Req = -
B Min Brg Width Req = -
Bearing A is a rigid surface.

Members not listed have forces less than 375#

Lumber
Top chord 2x4 SP M-31
Bot chord 2x4 SP M-31

Wind
Wind loads based on MWFRS with additional C&C member design.

DOUGLAS FLEMING
LICENSE
No. 66648
STATE OF
FLORIDA
PROFESSIONAL ENGINEER

#0 278
04/14/2017

****WARNING**** READ AND FOLLOW ALL NOTES ON THIS DRAWING!
****IMPORTANT**** FURNISH THIS DRAWING TO ALL CONTRACTORS INCLUDING THE INSTALLERS

Trusses require extreme care in fabricating, handling, shipping, installing and bracing. Refer to and follow the latest edition of BCSI (Building Component Safety Information, by TPI and SBCA) for safety practices prior to performing these functions. Installers shall provide temporary bracing per BCSI. Unless noted otherwise,top chord shall have properly attached structural sheathing and bottom chord shall have a properly attached rigid ceiling. Locations shown for permanent lateral restraint of webs shall have bracing installed per BCSI sections B3, B7, or B10, as applicable. Apply plates to each face of truss and position as shown above and on the Joint Details, unless noted otherwise. Refer to drawings 160A-Z for standard plate positions.

Alpine, a division of ITW Building Components Group Inc. shall not be responsible for any deviation from this drawing,any failure to build the truss in conformance with ANSI/TPI 1, or for handling, shipping, installation and bracing of trusses**A seal on this drawing or cover page listing this drawing, indicates acceptance of professional engineering responsibility solely for the design shown. The suitability and use of this drawing for any structure is the responsibility of the Building Designer per ANSI/TPI 1 Sec.2.**

For more information see this job's general notes page and these web sites: ALPINE: www.alpineitw.com; TPI: www.tpinst.org; SBCA: www.sbcindustry.com; ICC: www.iccsafe.org

ALPINE
AN ITW COMPANY
2400 Lake Orange Dr.
Suite 150
Orlando FL, 32837

Job Number: 16-0982 HUBBART RESIDENCE **Truss Label:** J05	Ply: 1 Qty: 20	SEQN: 468419 / T38 EJAC FROM: CDM	Cust: R215 JRef: 1VZZ2150001 DrwNo: 104.17.1306.04413 KM / DF 04/14/2017

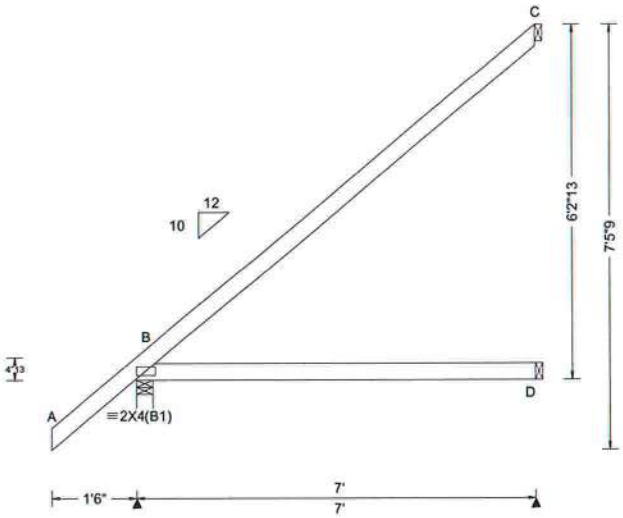

Loading Criteria (psf)
TCLL: 20.00
TCDL: 10.00
BCLL: 0.00
BCDL: 10.00
Des Ld: 40.00
NCBCLL: 10.00
Soffit: 2.00
Load Duration: 1.25
Spacing: 24.0 "

Wind Criteria
Wind Std: ASCE 7-10
Speed: 130 mph
Enclosure: Closed
Risk Category: II
EXP: C
Mean Height: 15.00 ft
TCDL: 5.0 psf
BCDL: 5.0 psf
MWFRS Parallel Dist: 0 to h/2
C&C Dist a: 3.00 ft
Loc. from endwall: not in 4.50 ft
GCpi: 0.18
Wind Duration: 1.60

Snow Criteria (Pg,Pf in PSF)
Pg: NA Ct: NA CAT: NA
Pf: NA Ce: NA
Lu: NA Cs: NA
Snow Duration: NA

Code / Misc Criteria
Bldg Code: FBC 2014 RES
TPI Std: 2007
Rep Factors Used: Yes
FT/RT:20(0)/10(0)
Plate Type(s):
WAVE

Defl/CSI Criteria
PP Deflection in loc L/defl L/#
VERT(LL): NA
VERT(TL): NA
HORZ(LL): 0.012 D - -
HORZ(TL): 0.026 D - -
Creep Factor: 1.5
Max TC CSI: 0.313
Max BC CSI: 0.210
Max Web CSI: 0.000

VIEW Ver: 16.02.01B.0131.17

▲ Maximum Reactions (lbs)

Loc	R	/ U	/ Rw	/ Rh	/ RL	/ W
B	445	/ -	/ 309	/ -	/ 201	/ 3.5
D	158	/ 2	/ 95	/ -	/ -	/ 1.5
C	202	/ 106	/ 136	/ -	/ -	/ 1.5

Wind reactions based on MWFRS
B Min Brg Width Req = 1.5
D Min Brg Width Req = -
C Min Brg Width Req = -
Bearing B is a rigid surface.

Members not listed have forces less than 375#

Lumber

Top chord 2x4 SP M-31
Bot chord 2x4 SP M-31

Loading

Truss passed check for 20 psf additional bottom chord live load in areas with 42"-high x 24"-wide clearance.

Wind

Wind loads based on MWFRS with additional C&C member design.

#0 278

04/14/2017

****WARNING**** READ AND FOLLOW ALL NOTES ON THIS DRAWING!
****IMPORTANT**** FURNISH THIS DRAWING TO ALL CONTRACTORS INCLUDING THE INSTALLERS

Trusses require extreme care in fabricating, handling, shipping, installing and bracing. Refer to and follow the latest edition of BCSI (Building Component Safety Information, by TPI and SBCA) for safety practices prior to performing these functions. Installers shall provide temporary bracing per BCSI. Unless noted otherwise,top chord shall have properly attached structural sheathing and bottom chord shall have a properly attached rigid ceiling. Locations shown for permanent lateral restraint of webs shall have bracing installed per BCSI sections B3, B7, or B10, as applicable. Apply plates to each face of truss and position as shown above and on the Joint Details, unless noted otherwise. Refer to drawings 160A-Z for standard plate positions.

Alpine, a division of ITW Building Components Group Inc. shall not be responsible for any deviation from this drawing,any failure to build the truss in conformance with ANSI/TPI 1, or for handling, shipping, installation and bracing of trusses**A seal on this drawing or cover page listing this drawing, indicates acceptance of professional engineering responsibility solely for the design shown. The suitability and use of this drawing for any structure is the responsibility of the Building Designer per ANSI/TPI 1 Sec.2.**

For more information see this job's general notes page and these web sites: ALPINE: www.alpineitw.com; TPI: www.tpinst.org; SBCA: www.sbcindustry.com; ICC: www.iccsafe.org

ALPINE AN ITW COMPANY
2400 Lake Orange Dr.
Suite 150
Orlando FL, 32837

Job Number: 16-0982 HUBBART RESIDENCE **Truss Label:** J06	Ply: 1 Qty: 1	SEQN: 468474 / T35 EJAC FROM: CDM	Cust: R215 JRef: 1VZZ2150001 DrwNo: 104.17.1306.05880 KM / DF 04/14/2017

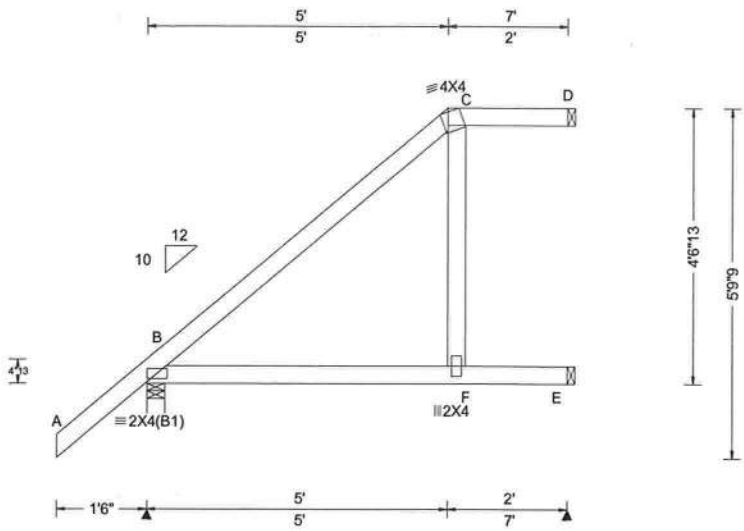

Loading Criteria (psf)
TCLL: 20.00
TCDL: 10.00
BCLL: 0.00
BCDL: 10.00
Des Ld: 40.00
NCBCLL: 10.00
Soffit: 2.00
Load Duration: 1.25
Spacing: 24.0 "

Wind Criteria
Wind Std: ASCE 7-10
Speed: 130 mph
Enclosure: Closed
Risk Category: II
EXP: C
Mean Height: 15.00 ft
TCDL: 5.0 psf
BCDL: 5.0 psf
MWFRS Parallel Dist: 0 to h/2
C&C Dist a: 3.00 ft
Loc. from endwall: not in 4.50 ft
GCpi: 0.18
Wind Duration: 1.60

Snow Criteria (Pg,Pf in PSF)
Pg: NA Ct: NA CAT: NA
Pf: NA Ce: NA
Lu: NA Cs: NA
Snow Duration: NA

Code / Misc Criteria
Bldg Code: FBC 2014 RES
TPI Std: 2007
Rep Factors Used: Yes
FT/RT:20(0)/10(0)
Plate Type(s):
WAVE

Defl/CSI Criteria

PP Deflection in	loc	L/defl	L/#
VERT(LL): 0.077	C	999	240
VERT(TL): 0.202	C	407	180
HORZ(LL): 0.066	C	-	-
HORZ(TL): 0.175	C	-	-

Creep Factor: 1.5
Max TC CSI: 0.231
Max BC CSI: 0.243
Max Web CSI: 0.024

VIEW Ver: 16.02.01B.0131.17

▲ Maximum Reactions (lbs)

Loc	R	/ U	/ Rw	/ Rh	/ RL	/ W
B	428	/ 32	/ 316	/ -	/ 155	/ 3.5
E	166	/ 52	/ 118	/ -	/ -	/ 1.5
D	115	/ 22	/ 62	/ 0	/ 0	/ 1.5

Wind reactions based on MWFRS
B Min Brg Width Req = 1.5
E Min Brg Width Req = -
D Min Brg Width Req = -
Bearing B is a rigid surface.

Members not listed have forces less than 375#

Lumber

Top chord 2x4 SP M-31
Bot chord 2x4 SP M-31
Webs 2x4 SP M-31

Purlins

In lieu of structural panels use purlins to brace all flat TC @ 24" oc.

Wind

Wind loads based on MWFRS with additional C&C member design.

#0 278

04/14/2017

****WARNING**** READ AND FOLLOW ALL NOTES ON THIS DRAWING!
****IMPORTANT**** FURNISH THIS DRAWING TO ALL CONTRACTORS INCLUDING THE INSTALLERS

Trusses require extreme care in fabricating, handling, shipping, installing and bracing. Refer to and follow the latest edition of BCSI (Building Component Safety Information, by TPI and SBCA) for safety practices prior to performing these functions. Installers shall provide temporary bracing per BCSI. Unless noted otherwise,top chord shall have properly attached structural sheathing and bottom chord shall have a properly attached rigid ceiling. Locations shown for permanent lateral restraint of webs shall have bracing installed per BCSI sections B3, B7, or B10, as applicable. Apply plates to each face of truss and position as shown above and on the Joint Details, unless noted otherwise. Refer to drawings 160A-Z for standard plate positions.

Alpine, a division of ITW Building Components Group Inc. shall not be responsible for any deviation from this drawing,any failure to build the truss in conformance with ANSI/TPI 1, or for handling, shipping, installation and bracing of trusses**A seal on this drawing or cover page listing this drawing, indicates acceptance of professional engineering responsibility solely for the design shown. The suitability and use of this drawing for any structure is the responsibility of the Building Designer per ANSI/TPI 1 Sec.2.**

For more information see this job's general notes page and these web sites: ALPINE: www.alpineitw.com; TPI: www.tpinst.org; SBCA: www.sbcindustry.com; ICC: www.iccsafe.org

ALPINE
AN ITW COMPANY
2400 Lake Orange Dr.
Suite 150
Orlando FL, 32837

Job Number: 16-0982 HUBBART RESIDENCE **Truss Label:** J07	Ply: 1 Qty: 1	SEQN: 468470 / T12 EJAC FROM: CDM	Cust: R215 JRef: 1VZZ2150001 DrwNo: 104.17.1306.07190 KM / DF 04/14/2017

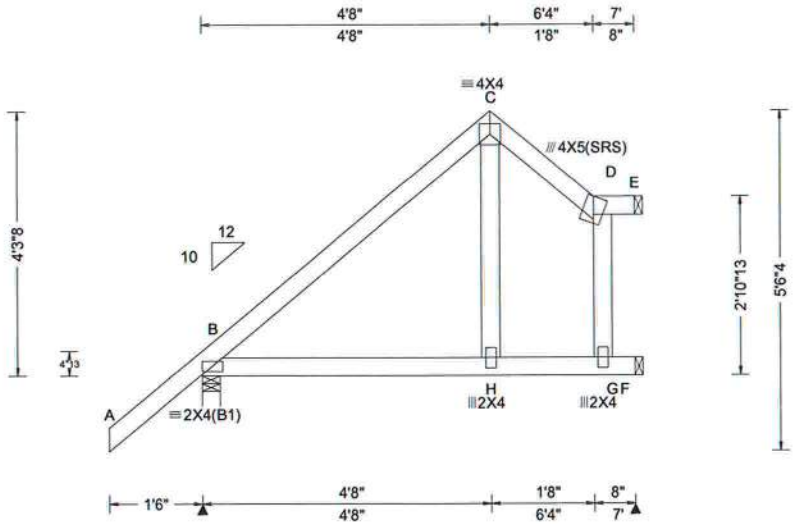

Loading Criteria (psf)

TCLL:	20.00
TCDL:	10.00
BCLL:	0.00
BCDL:	10.00
Des Ld:	40.00
NCBCLL:	10.00
Soffit:	2.00

Load Duration: 1.25
Spacing: 24.0 "

Wind Criteria
Wind Std: ASCE 7-10
Speed: 130 mph
Enclosure: Closed
Risk Category: II
EXP: C
Mean Height: 15.00 ft
TCDL: 5.0 psf
BCDL: 5.0 psf
MWFRS Parallel Dist: 0 to h/2
C&C Dist a: 3.00 ft
Loc. from endwall: not in 4.50 ft
GCpi: 0.18
Wind Duration: 1.60

Snow Criteria (Pg,Pf in PSF)
Pg: NA Ct: NA CAT: NA
Pf: NA Ce: NA
Lu: NA Cs: NA
Snow Duration: NA

Code / Misc Criteria
Bldg Code: FBC 2014 RES
TPI Std: 2007
Rep Factors Used: Yes
FT/RT:20(0)/10(0)
Plate Type(s):
WAVE

Defl/CSI Criteria

PP Deflection in	loc	L/defl	L/#
VERT(LL): 0.053	C	999	240
VERT(TL): 0.139	C	590	180
HORZ(LL): 0.076	D	-	-
HORZ(TL): 0.201	D	-	-

Creep Factor: 1.5
Max TC CSI: 0.141
Max BC CSI: 0.152
Max Web CSI: 0.072

VIEW Ver: 16.02.01B.0131.17

▲ Maximum Reactions (lbs)

Loc	R	/ U	/ Rw	/ Rh	/ RL	/ W
B	428	/ 56	/ 301	/ -	/ 114	/ 3.5
F	138	/ 17	/ 82	/ -	/ -	/ 1.5
E	143	/ 26	/ 99	/ -	/ -	/ 1.5

Wind reactions based on MWFRS
B Min Brg Width Req = 1.5
F Min Brg Width Req = -
E Min Brg Width Req = -
Bearing B is a rigid surface.

Members not listed have forces less than 375#

Lumber
Top chord 2x4 SP M-31
Bot chord 2x4 SP M-31
Webs 2x4 SP M-31

Purlins
In lieu of structural panels use purlins to brace all flat TC @ 24" oc.

Wind
Wind loads based on MWFRS with additional C&C member design.

#0 278
04/14/2017

****WARNING**** READ AND FOLLOW ALL NOTES ON THIS DRAWING!
****IMPORTANT**** FURNISH THIS DRAWING TO ALL CONTRACTORS INCLUDING THE INSTALLERS

Trusses require extreme care in fabricating, handling, shipping, installing and bracing. Refer to and follow the latest edition of BCSI (Building Component Safety Information, by TPI and SBCA) for safety practices prior to performing these functions. Installers shall provide temporary bracing per BCSI. Unless noted otherwise,top chord shall have properly attached structural sheathing and bottom chord shall have a properly attached rigid ceiling. Locations shown for permanent lateral restraint of webs shall have bracing installed per BCSI sections B3, B7, or B10, as applicable. Apply plates to each face of truss and position as shown above and on the Joint Details, unless noted otherwise. Refer to drawings 160A-Z for standard plate positions.

Alpine, a division of ITW Building Components Group Inc. shall not be responsible for any deviation from this drawing,any failure to build the truss in conformance with ANSI/TPI 1, or for handling, shipping, installation and bracing of trusses**A seal on this drawing or cover page listing this drawing, indicates acceptance of professional engineering responsibility solely for the design shown. The suitability and use of this drawing for any structure is the responsibility of the Building Designer per ANSI/TPI 1 Sec.2.**

For more information see this job's general notes page and these web sites: ALPINE: www.alpineitw.com; TPI: www.tpinst.org; SBCA: www.sbcindustry.com; ICC: www.iccsafe.org

ALPINE
AN ITW COMPANY
2400 Lake Orange Dr.
Suite 150
Orlando FL, 32837

Job Number: 16-0982 HUBBART RESIDENCE **Truss Label:** J08	Ply: 1 Qty: 1	SEQN: 468472 / T30 EJAC FROM: CDM	Cust: R215 JRef: 1VZZ2150001 DrwNo: 104.17.1306.11533 KM / DF 04/14/2017

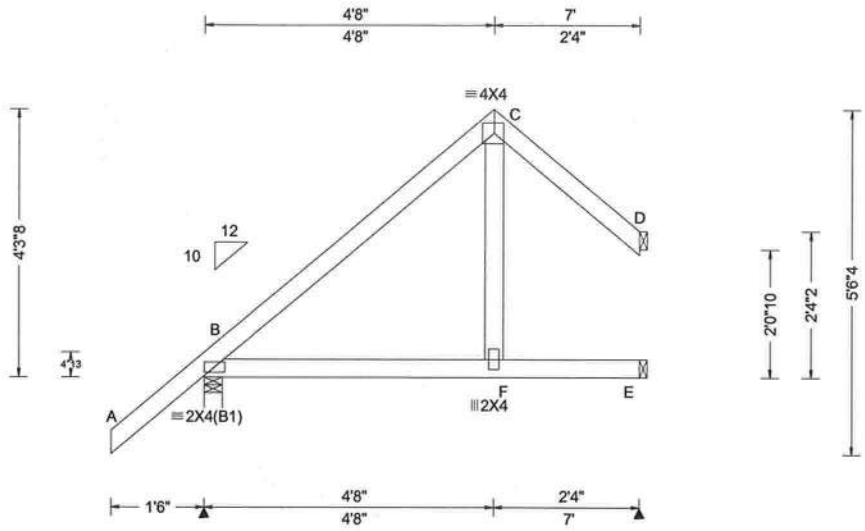

Loading Criteria (psf)
TCLL: 20.00
TCDL: 10.00
BCLL: 0.00
BCDL: 10.00
Des Ld: 40.00
NCBCLL: 10.00
Soffit: 2.00
Load Duration: 1.25
Spacing: 24.0 "

Wind Criteria
Wind Std: ASCE 7-10
Speed: 130 mph
Enclosure: Closed
Risk Category: II
EXP: C
Mean Height: 15.00 ft
TCDL: 5.0 psf
BCDL: 5.0 psf
MWFRS Parallel Dist: 0 to h/2
C&C Dist a: 3.00 ft
Loc. from endwall: Any
GCpi: 0.18
Wind Duration: 1.60

Snow Criteria (Pg,Pf in PSF)
Pg: NA Ct: NA CAT: NA
Pf: NA Ce: NA
Lu: NA Cs: NA
Snow Duration: NA

Code / Misc Criteria
Bldg Code: FBC 2014 RES
TPI Std: 2007
Rep Factors Used: Yes
FT/RT:20(0)/10(0)
Plate Type(s):
WAVE

Defl/CSI Criteria

PP Deflection in	loc	L/defl	L/#
VERT(LL): 0.087	C	947	240
VERT(TL): 0.228	C	360	180
HORZ(LL): 0.145	D	-	-
HORZ(TL): 0.381	D	-	-

Creep Factor: 1.5
Max TC CSI: 0.209
Max BC CSI: 0.282
Max Web CSI: 0.053

VIEW Ver: 16.02.01B.0131.17

▲ Maximum Reactions (lbs)

Loc	R	/ U	/ Rw	/ Rh	/ RL	/ W
B	428	/ 58	/ 299	/ -	/ 122	/ 3.5
E	157	/ 16	/ 128	/ -	/ -	/ 1.5
D	124	/ 27	/ 77	/ -	/ -	/ 1.5

Wind reactions based on MWFRS
B Min Brg Width Req = 1.5
E Min Brg Width Req = -
D Min Brg Width Req = -
Bearing B is a rigid surface.

Members not listed have forces less than 375#

Lumber

Top chord 2x4 SP M-31
Bot chord 2x4 SP M-31
Webs 2x4 SP M-31

Wind

Wind loads based on MWFRS with additional C&C member design.

#0 278
04/14/2017

****WARNING**** READ AND FOLLOW ALL NOTES ON THIS DRAWING!
****IMPORTANT**** FURNISH THIS DRAWING TO ALL CONTRACTORS INCLUDING THE INSTALLERS

Trusses require extreme care in fabricating, handling, shipping, installing and bracing. Refer to and follow the latest edition of BCSI (Building Component Safety Information, by TPI and SBCA) for safety practices prior to performing these functions. Installers shall provide temporary bracing per BCSI. Unless noted otherwise,top chord shall have properly attached structural sheathing and bottom chord shall have a properly attached rigid ceiling. Locations shown for permanent lateral restraint of webs shall have bracing installed per BCSI sections B3, B7, or B10, as applicable. Apply plates to each face of truss and position as shown above and on the Joint Details, unless noted otherwise. Refer to drawings 160A-Z for standard plate positions.

Alpine, a division of ITW Building Components Group Inc. shall not be responsible for any deviation from this drawing,any failure to build the truss in conformance with ANSI/TPI 1, or for handling, shipping, installation and bracing of trusses**A seal on this drawing or cover page listing this drawing, indicates acceptance of professional engineering responsibility solely for the design shown. The suitability and use of this drawing for any structure is the responsibility of the Building Designer per ANSI/TPI 1 Sec.2.**

For more information see this job's general notes page and these web sites: ALPINE: www.alpineitw.com; TPI: www.tpinst.org; SBCA: www.sbcindustry.com; ICC: www.iccsafe.org

ALPINE
AN ITW COMPANY
2400 Lake Orange Dr.
Suite 150
Orlando FL, 32837

Job Number: 16-0982 HUBBART RESIDENCE **Truss Label:** J09	Ply: 1 Qty: 1	SEQN: 468482 / T26 HIP_ FROM: CDM	Cust: R215 JRef: 1VZZ2150001 DrwNo: 104.17.1306.12680 KM / DF 04/14/2017

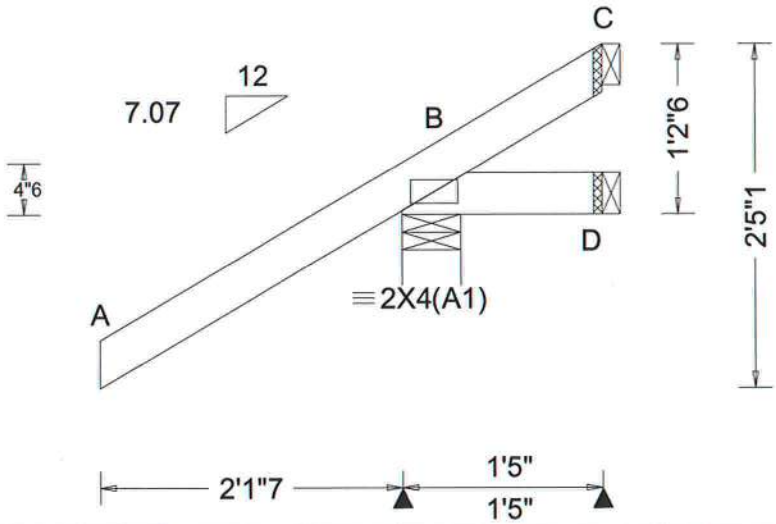

Loading Criteria (psf)
TCLL: 20.00
TCDL: 10.00
BCLL: 0.00
BCDL: 10.00
Des Ld: 40.00
NCBCLL: 10.00
Soffit: 2.00
Load Duration: 1.25
Spacing: 24.0 "

Wind Criteria
Wind Std: ASCE 7-10
Speed: 130 mph
Enclosure: Closed
Risk Category: II
EXP: C
Mean Height: 15.00 ft
TCDL: 5.0 psf
BCDL: 5.0 psf
MWFRS Parallel Dist: 0 to h/2
C&C Dist a: 3.00 ft
Loc. from endwall: Any
GCpi: 0.18
Wind Duration: 1.60

Snow Criteria (Pg,Pf in PSF)
Pg: NA Ct: NA CAT: NA
Pf: NA Ce: NA
Lu: NA Cs: NA
Snow Duration: NA

Code / Misc Criteria
Bldg Code: FBC 2014 RES
TPI Std: 2007
Rep Factors Used: Yes
FT/RT:20(0)/10(0)
Plate Type(s):
WAVE

Defl/CSI Criteria
PP Deflection in loc L/defl L/#
VERT(LL): NA
VERT(TL): NA
HORZ(LL): -0.001 D - -
HORZ(TL): -0.001 D - -
Creep Factor: 1.5
Max TC CSI: 0.136
Max BC CSI: 0.023
Max Web CSI: 0.000

VIEW Ver: 16.02.01B.0131.17

▲ Maximum Reactions (lbs)

Loc	R	/ U	/ Rw	/ Rh	/ RL	/ W
B	162	/ 90	/ 287	/ -	/ 59	/ 4.9
D	9	/ 25	/ 25	/ -	/ -	/ 1.5
C	-34	/ 73	/ 43	/ -	/ -	/ 1.5

Wind reactions based on MWFRS
B Min Brg Width Req = 1.5
D Min Brg Width Req = -
C Min Brg Width Req = -
Bearing B is a rigid surface.

Members not listed have forces less than 375#

Lumber

Top chord 2x4 SP M-31
Bot chord 2x4 SP M-31

Special Loads

------(Lumber Dur.Fac.=1.25 / Plate Dur.Fac.=1.25)

TC- From	0 plf at	-2.12 to	63 plf at	0.00
TC- From	2 plf at	0.00 to	2 plf at	1.41
BC- From	0 plf at	-2.12 to	5 plf at	0.00
BC- From	2 plf at	0.00 to	2 plf at	1.41

Wind

Wind loads based on MWFRS with additional C&C member design.

DOUGLAS FLEMING
LICENSE
No. 66648
STATE OF
FLORIDA
PROFESSIONAL ENGINEER

#0 278

04/14/2017

****WARNING**** READ AND FOLLOW ALL NOTES ON THIS DRAWING!
****IMPORTANT**** FURNISH THIS DRAWING TO ALL CONTRACTORS INCLUDING THE INSTALLERS

Trusses require extreme care in fabricating, handling, shipping, installing and bracing. Refer to and follow the latest edition of BCSI (Building Component Safety Information, by TPI and SBCA) for safety practices prior to performing these functions. Installers shall provide temporary bracing per BCSI. Unless noted otherwise,top chord shall have properly attached structural sheathing and bottom chord shall have a properly attached rigid ceiling. Locations shown for permanent lateral restraint of webs shall have bracing installed per BCSI sections B3, B7, or B10, as applicable. Apply plates to each face of truss and position as shown above and on the Joint Details, unless noted otherwise. Refer to drawings 160A-Z for standard plate positions.

Alpine, a division of ITW Building Components Group Inc. shall not be responsible for any deviation from this drawing,any failure to build the truss in conformance with ANSI/TPI 1, or for handling, shipping, installation and bracing of trusses**A seal on this drawing or cover page listing this drawing, indicates acceptance of professional engineering responsibility solely for the design shown. The suitability and use of this drawing for any structure is the responsibility of the Building Designer per ANSI/TPI 1 Sec.2.**

For more information see this job's general notes page and these web sites: ALPINE: www.alpineitw.com; TPI: www.tpinst.org; SBCA: www.sbcindustry.com; ICC: www.iccsafe.org

ALPINE
AN ITW COMPANY
2400 Lake Orange Dr.
Suite 150
Orlando FL, 32837

Job Number: 16-0982 HUBBART RESIDENCE **Truss Label:** J10	Ply: 1 Qty: 1	SEQN: 468336 / T81 JACK FROM: CDM	Cust: R215 JRef: 1VZZ2150001 DrwNo: 104.17.1306.13770 KM / DF 04/14/2017

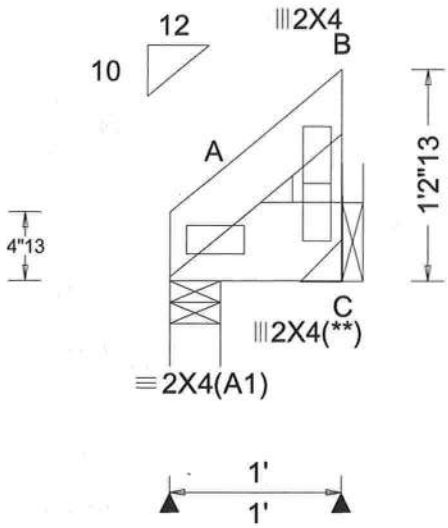

Loading Criteria (psf)	**Wind Criteria**	**Snow Criteria** (Pg,Pf in PSF)	**Defl/CSI Criteria**	**▲Maximum Reactions (lbs)**
TCLL: 20.00 TCDL: 10.00 BCLL: 0.00 BCDL: 10.00 Des Ld: 40.00 NCBCLL: 10.00 Soffit: 2.00 Load Duration: 1.25 Spacing: 24.0 "	Wind Std: ASCE 7-10 Speed: 130 mph Enclosure: Closed Risk Category: II EXP: C Mean Height: 15.00 ft TCDL: 5.0 psf BCDL: 5.0 psf MWFRS Parallel Dist: 0 to h/2 C&C Dist a: 3.00 ft Loc. from endwall: not in 4.50 ft GCpi: 0.18 Wind Duration: 1.60	Pg: NA Ct: NA CAT: NA Pf: NA Ce: NA Lu: NA Cs: NA Snow Duration: NA **Code / Misc Criteria** Bldg Code: FBC 2014 RES TPI Std: 2007 Rep Factors Used: Yes FT/RT:20(0)/10(0) Plate Type(s): WAVE	PP Deflection in loc L/defl L/# VERT(LL): NA VERT(TL): NA HORZ(LL): 0.001 C - - HORZ(TL): 0.001 C - - Creep Factor: 1.5 Max TC CSI: 0.036 Max BC CSI: 0.071 Max Web CSI: 0.001 VIEW Ver: 16.02.01B.0131.17	Loc R / U / Rw / Rh / RL / W A 956 / 144 / - / - / - / 3.5 C 410 / 62 / - / 0 / - / - Wind reactions based on MWFRS A Min Brg Width Req = 1.5 C Min Brg Width Req = - Bearing A is a rigid surface. Members not listed have forces less than 375#

Lumber

Top chord 2x4 SP M-31
Bot chord 2x6 SP M-31
Webs 2x4 SP M-31

Special Loads

------(Lumber Dur.Fac.=1.25 / Plate Dur.Fac.=1.25)
TC- From 66 plf at 0.00 to 66 plf at 1.00
BC- From 20 plf at 0.00 to 20 plf at 1.00
BC- 1280 lb Conc. Load at 0.40

Plating Notes

(**) 1 plate(s) require special positioning. Refer to scaled plate plot details for special positioning requirements.

Hangers / Ties

Recommended hanger connections are based on manufacturer tested capacities and calculations. Conditions may exist that require different connections than indicated. Refer to manufacturer publication for additional information.

Bearing at location x=9" ,y=10' uses the following support conditions:
Bearing C (9", 10') HUS26
Supporting Member: (1)2x6 SP M-31
(14) 0.148"x3" nails into supporting member,
(4) 0.148"x3" nails into supported member.

Wind

Wind loads and reactions based on MWFRS.

DOUGLAS FLEMING LICENSE No. 66648 STATE OF FLORIDA PROFESSIONAL ENGINEER

#0 278

04/14/2017

****WARNING**** READ AND FOLLOW ALL NOTES ON THIS DRAWING!
****IMPORTANT**** FURNISH THIS DRAWING TO ALL CONTRACTORS INCLUDING THE INSTALLERS

Trusses require extreme care in fabricating, handling, shipping, installing and bracing. Refer to and follow the latest edition of BCSI (Building Component Safety Information, by TPI and SBCA) for safety practices prior to performing these functions. Installers shall provide temporary bracing per BCSI. Unless noted otherwise,top chord shall have properly attached structural sheathing and bottom chord shall have a properly attached rigid ceiling. Locations shown for permanent lateral restraint of webs shall have bracing installed per BCSI sections B3, B7, or B10, as applicable. Apply plates to each face of truss and position as shown above and on the Joint Details, unless noted otherwise. Refer to drawings 160A-Z for standard plate positions.

Alpine, a division of ITW Building Components Group Inc. shall not be responsible for any deviation from this drawing,any failure to build the truss in conformance with ANSI/TPI 1, or for handling, shipping, installation and bracing of trusses**A seal on this drawing or cover page listing this drawing, indicates acceptance of professional engineering responsibility solely for the design shown. The suitability and use of this drawing for any structure is the responsibility of the Building Designer per ANSI/TPI 1 Sec.2.**

For more information see this job's general notes page and these web sites: ALPINE: www.alpineitw.com; TPI: www.tpinst.org; SBCA: www.sbcindustry.com; ICC: www.iccsafe.org

ALPINE AN ITW COMPANY
2400 Lake Orange Dr.
Suite 150
Orlando FL, 32837

Job Number: 16-0982 HUBBART RESIDENCE **Truss Label:** J11	Ply: 1 Qty: 1	SEQN: 468505 / T98 JACK FROM: CDM	Cust: R215 JRef: 1VZZ2150001 DrwNo: 104.17.1306.15183 KM / DF 04/14/2017

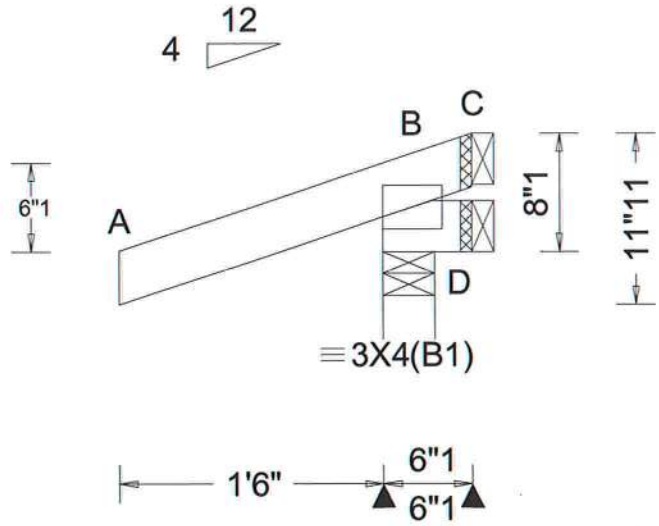

Loading Criteria (psf)	**Wind Criteria**	**Snow Criteria** (Pg,Pf in PSF)	**Defl/CSI Criteria**	**▲Maximum Reactions (lbs)**
TCLL: 20.00 TCDL: 10.00 BCLL: 0.00 BCDL: 10.00 Des Ld: 40.00 NCBCLL: 10.00 Soffit: 2.00 Load Duration: 1.25 Spacing: 24.0 "	Wind Std: ASCE 7-10 Speed: 130 mph Enclosure: Closed Risk Category: II EXP: C Mean Height: 15.00 ft TCDL: 5.0 psf BCDL: 5.0 psf MWFRS Parallel Dist: h/2 to h C&C Dist a: 3.00 ft Loc. from endwall: not in 9.00 ft GCpi: 0.18 Wind Duration: 1.60	Pg: NA Ct: NA CAT: NA Pf: NA Ce: NA Lu: NA Cs: NA Snow Duration: NA **Code / Misc Criteria** Bldg Code: FBC 2014 RES TPI Std: 2007 Rep Factors Used: Yes FT/RT:20(0)/10(0) Plate Type(s): WAVE	PP Deflection in loc L/defl L/# VERT(LL): NA VERT(TL): NA HORZ(LL): -0.000 C - - HORZ(TL): -0.001 C - - Creep Factor: 1.5 Max TC CSI: 0.065 Max BC CSI: 0.009 Max Web CSI: 0.000 VIEW Ver: 16.02.01B.0131.17	Loc R / U / Rw / Rh / RL / W B 367 / 159 / 280 / - / 23 / 3.5 D -30 / 30 / 18 / - / - / 1.5 C -199 / 199 / 98 / - / - / 1.5 Wind reactions based on MWFRS B Min Brg Width Req = 1.5 D Min Brg Width Req = - C Min Brg Width Req = - Bearing B is a rigid surface. Members not listed have forces less than 375#

Lumber

Top chord 2x4 SP M-31
Bot chord 2x4 SP M-31

Wind

Wind loads based on MWFRS with additional C&C member design.

Additional Notes

Negative reaction(s) of -199# MAX. from a non-wind load case requires uplift connection. See Maximum Reactions.

#0 278

04/14/2017

****WARNING**** READ AND FOLLOW ALL NOTES ON THIS DRAWING!
****IMPORTANT**** FURNISH THIS DRAWING TO ALL CONTRACTORS INCLUDING THE INSTALLERS

Trusses require extreme care in fabricating, handling, shipping, installing and bracing. Refer to and follow the latest edition of BCSI (Building Component Safety Information, by TPI and SBCA) for safety practices prior to performing these functions. Installers shall provide temporary bracing per BCSI. Unless noted otherwise,top chord shall have properly attached structural sheathing and bottom chord shall have a properly attached rigid ceiling. Locations shown for permanent lateral restraint of webs shall have bracing installed per BCSI sections B3, B7, or B10, as applicable. Apply plates to each face of truss and position as shown above and on the Joint Details, unless noted otherwise. Refer to drawings 160A-Z for standard plate positions.

Alpine, a division of ITW Building Components Group Inc. shall not be responsible for any deviation from this drawing,any failure to build the truss in conformance with ANSI/TPI 1, or for handling, shipping, installation and bracing of trusses**A seal on this drawing or cover page listing this drawing, indicates acceptance of professional engineering responsibility solely for the design shown. The suitability and use of this drawing for any structure is the responsibility of the Building Designer per ANSI/TPI 1 Sec.2.**

For more information see this job's general notes page and these web sites: ALPINE: www.alpineitw.com; TPI: www.tpinst.org; SBCA: www.sbcindustry.com; ICC: www.iccsafe.org

ALPINE
AN ITW COMPANY
2400 Lake Orange Dr.
Suite 150
Orlando FL, 32837

Job Number: 16-0982 HUBBART RESIDENCE **Truss Label:** J12	Ply: 1 Qty: 1	SEQN: 468507 / T89 JACK FROM: CDM	Cust: R215 JRef: 1VZZ2150001 DrwNo: 104.17.1306.26760 KM / DF 04/14/2017

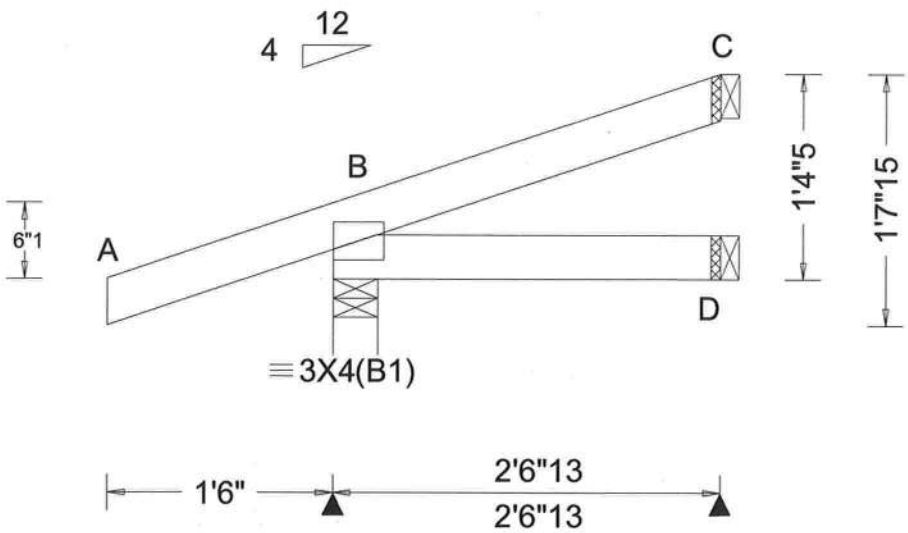

Loading Criteria (psf)	**Wind Criteria**	**Snow Criteria** (Pg,Pf in PSF)	**Defl/CSI Criteria**	**▲Maximum Reactions (lbs)**
TCLL: 20.00 TCDL: 10.00 BCLL: 0.00 BCDL: 10.00 Des Ld: 40.00 NCBCLL: 10.00 Soffit: 2.00 Load Duration: 1.25 Spacing: 24.0 "	Wind Std: ASCE 7-10 Speed: 130 mph Enclosure: Closed Risk Category: II EXP: C Mean Height: 15.00 ft TCDL: 5.0 psf BCDL: 5.0 psf MWFRS Parallel Dist: h/2 to h C&C Dist a: 3.00 ft Loc. from endwall: not in 9.00 ft GCpi: 0.18 Wind Duration: 1.60	Pg: NA Ct: NA CAT: NA Pf: NA Ce: NA Lu: NA Cs: NA Snow Duration: NA **Code / Misc Criteria** Bldg Code: FBC 2014 RES TPI Std: 2007 Rep Factors Used: Yes FT/RT:20(0)/10(0) Plate Type(s): WAVE	PP Deflection in loc L/defl L/# VERT(LL): NA VERT(TL): NA HORZ(LL): 0.000 D - - HORZ(TL): -0.001 D - - Creep Factor: 1.5 Max TC CSI: 0.066 Max BC CSI: 0.022 Max Web CSI: 0.000 VIEW Ver: 16.02.01B.0131.17	

Loc	R	/ U	/ Rw	/ Rh	/ RL	/ W
B	244	/ 62	/ 173	/ -	/ 39	/ 3.5
D	44	/ 0	/ 33	/ -	/ -	/ 1.5
C	43	/ 17	/ 14	/ -	/ -	/ 1.5

Wind reactions based on MWFRS
B Min Brg Width Req = 1.5
D Min Brg Width Req = -
C Min Brg Width Req = -
Bearing B is a rigid surface.

Members not listed have forces less than 375#

Lumber

Top chord 2x4 SP M-31
Bot chord 2x4 SP M-31

Wind

Wind loads based on MWFRS with additional C&C member design.

#0 278

04/14/2017

****WARNING**** READ AND FOLLOW ALL NOTES ON THIS DRAWING!
****IMPORTANT**** FURNISH THIS DRAWING TO ALL CONTRACTORS INCLUDING THE INSTALLERS

Trusses require extreme care in fabricating, handling, shipping, installing and bracing. Refer to and follow the latest edition of BCSI (Building Component Safety Information, by TPI and SBCA) for safety practices prior to performing these functions. Installers shall provide temporary bracing per BCSI. Unless noted otherwise,top chord shall have properly attached structural sheathing and bottom chord shall have a properly attached rigid ceiling. Locations shown for permanent lateral restraint of webs shall have bracing installed per BCSI sections B3, B7, or B10, as applicable. Apply plates to each face of truss and position as shown above and on the Joint Details, unless noted otherwise. Refer to drawings 160A-Z for standard plate positions.

Alpine, a division of ITW Building Components Group Inc. shall not be responsible for any deviation from this drawing,any failure to build the truss in conformance with ANSI/TPI 1, or for handling, shipping, installation and bracing of trusses**A seal on this drawing or cover page listing this drawing, indicates acceptance of professional engineering responsibility solely for the design shown. The suitability and use of this drawing for any structure is the responsibility of the Building Designer per ANSI/TPI 1 Sec.2.**

For more information see this job's general notes page and these web sites: ALPINE: www.alpineitw.com; TPI: www.tpinst.org; SBCA: www.sbcindustry.com; ICC: www.iccsafe.org

ALPINE AN ITW COMPANY
2400 Lake Orange Dr.
Suite 150
Orlando FL, 32837

Job Number: 16-0982 HUBBART RESIDENCE **Truss Label:** J13	Ply: 1 Qty: 1	SEQN: 468550 / T112 HIP_ FROM: CDM	Cust: R215 JRef: 1VZZ2150001 DrwNo: 104.17.1306.27963 KM / DF 04/14/2017

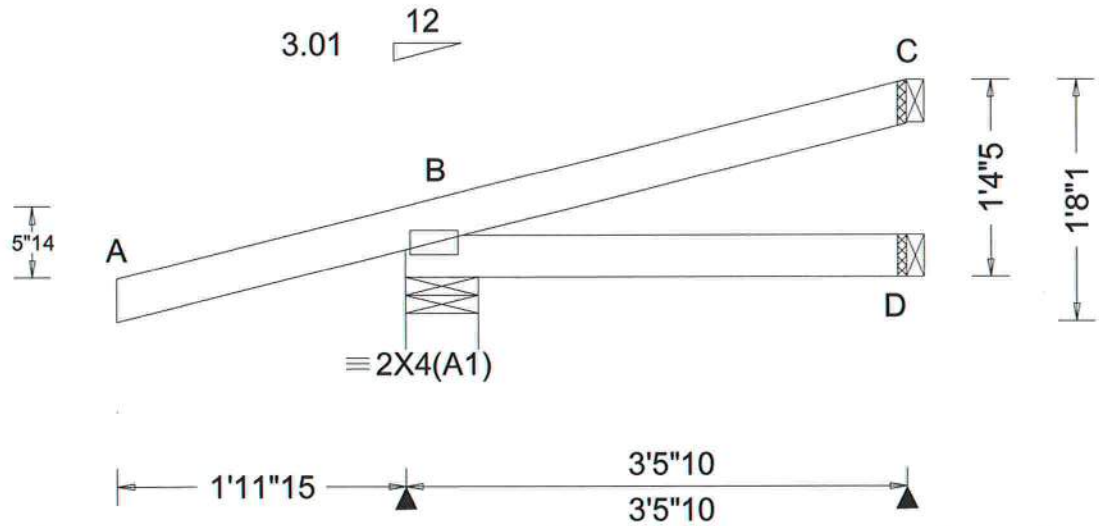

Loading Criteria (psf)	**Wind Criteria**	**Snow Criteria** (Pg,Pf in PSF)	**Defl/CSI Criteria**	**▲Maximum Reactions (lbs)**
TCLL: 20.00 TCDL: 10.00 BCLL: 0.00 BCDL: 10.00 Des Ld: 40.00 NCBCLL: 10.00 Soffit: 2.00 Load Duration: 1.25 Spacing: 24.0 "	Wind Std: ASCE 7-10 Speed: 130 mph Enclosure: Closed Risk Category: II EXP: C Mean Height: 15.00 ft TCDL: 5.0 psf BCDL: 5.0 psf MWFRS Parallel Dist: 0 to h/2 C&C Dist a: 3.00 ft Loc. from endwall: not in 9.00 ft GCpi: 0.18 Wind Duration: 1.60	Pg: NA Ct: NA CAT: NA Pf: NA Ce: NA Lu: NA Cs: NA Snow Duration: NA **Code / Misc Criteria** Bldg Code: FBC 2014 RES TPI Std: 2007 Rep Factors Used: Yes FT/RT:20(0)/10(0) Plate Type(s): WAVE	PP Deflection in loc L/defl L/# VERT(LL): NA VERT(TL): NA HORZ(LL): 0.000 D - - HORZ(TL): -0.001 D - - Creep Factor: 1.5 Max TC CSI: 0.135 Max BC CSI: 0.039 Max Web CSI: 0.000 VIEW Ver: 16.02.01B.0131.17	Loc R / U / Rw / Rh / RL / W B 319 / 96 / - / - / - / 6.1 D 68 / - / 16 / - / - / 1.5 C 108 / 42 / - / - / - / 1.5 Wind reactions based on MWFRS B Min Brg Width Req = 1.5 D Min Brg Width Req = - C Min Brg Width Req = - Bearing B is a rigid surface. Members not listed have forces less than 375#

Lumber

Top chord 2x4 SP M-31
Bot chord 2x4 SP M-31

Special Loads

------(Lumber Dur.Fac.=1.25 / Plate Dur.Fac.=1.25)
TC- From 61 plf at -1.99 to 61 plf at 3.47
BC- From 4 plf at -1.99 to 4 plf at 0.00
BC- From 20 plf at 0.00 to 20 plf at 3.47
PLT- 43 lb Conc. Load at (3.46,11.32)
PLB- 44 lb Conc. Load at (3.46,10.04)

Wind

Wind loads and reactions based on MWFRS.

#0 278

04/14/2017

****WARNING**** READ AND FOLLOW ALL NOTES ON THIS DRAWING!
****IMPORTANT**** FURNISH THIS DRAWING TO ALL CONTRACTORS INCLUDING THE INSTALLERS

Trusses require extreme care in fabricating, handling, shipping, installing and bracing. Refer to and follow the latest edition of BCSI (Building Component Safety Information, by TPI and SBCA) for safety practices prior to performing these functions. Installers shall provide temporary bracing per BCSI. Unless noted otherwise,top chord shall have properly attached structural sheathing and bottom chord shall have a properly attached rigid ceiling. Locations shown for permanent lateral restraint of webs shall have bracing installed per BCSI sections B3, B7, or B10, as applicable. Apply plates to each face of truss and position as shown above and on the Joint Details, unless noted otherwise. Refer to drawings 160A-Z for standard plate positions.

Alpine, a division of ITW Building Components Group Inc. shall not be responsible for any deviation from this drawing,any failure to build the truss in conformance with ANSI/TPI 1, or for handling, shipping, installation and bracing of trusses**A seal on this drawing or cover page listing this drawing, indicates acceptance of professional engineering responsibility solely for the design shown. The suitability and use of this drawing for any structure is the responsibility of the Building Designer per ANSI/TPI 1 Sec.2.**

For more information see this job's general notes page and these web sites: ALPINE: www.alpineitw.com; TPI: www.tpinst.org; SBCA: www.sbcindustry.com; ICC: www.iccsafe.org

ALPINE AN ITW COMPANY
2400 Lake Orange Dr.
Suite 150
Orlando FL, 32837

Job Number: 16-0982 HUBBART RESIDENCE **Truss Label:** J14	Ply: 1 Qty: 1	SEQN: 468511 / T124 JACK FROM: CDM	Cust: R215 JRef: 1VZZ2150001 DrwNo: 104.17.1306.29043 KM / DF 04/14/2017

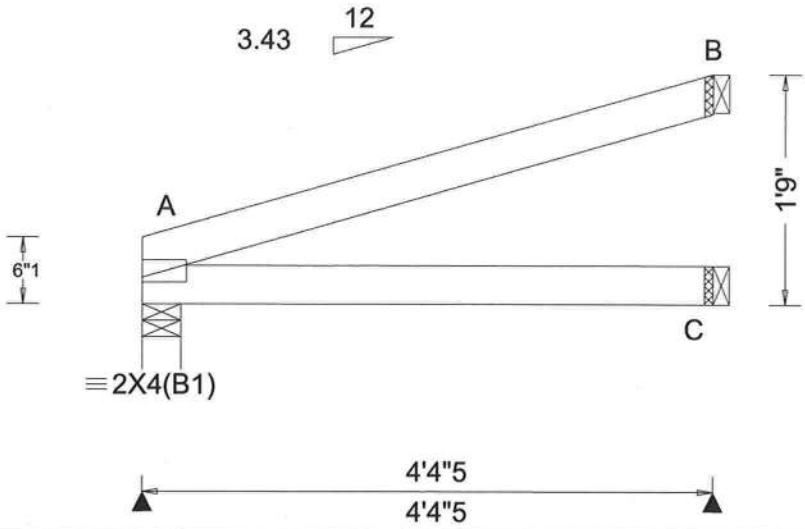

Loading Criteria (psf)
TCLL: 20.00
TCDL: 10.00
BCLL: 0.00
BCDL: 10.00
Des Ld: 40.00
NCBCLL: 10.00
Soffit: 2.00
Load Duration: 1.25
Spacing: 24.0 "

Wind Criteria
Wind Std: ASCE 7-10
Speed: 130 mph
Enclosure: Closed
Risk Category: II
EXP: C
Mean Height: 15.00 ft
TCDL: 5.0 psf
BCDL: 5.0 psf
MWFRS Parallel Dist: h to 2h
C&C Dist a: 3.00 ft
Loc. from endwall: not in 9.00 ft
GCpi: 0.18
Wind Duration: 1.60

Snow Criteria (Pg,Pf in PSF)
Pg: NA Ct: NA CAT: NA
Pf: NA Ce: NA
Lu: NA Cs: NA
Snow Duration: NA

Code / Misc Criteria
Bldg Code: FBC 2014 RES
TPI Std: 2007
Rep Factors Used: Yes
FT/RT:20(0)/10(0)
Plate Type(s):
WAVE

Defl/CSI Criteria
PP Deflection in loc L/defl L/#
VERT(LL): NA
VERT(TL): NA
HORZ(LL): 0.002 C - -
HORZ(TL): 0.006 C - -
Creep Factor: 1.5
Max TC CSI: 0.107
Max BC CSI: 0.078
Max Web CSI: 0.000

VIEW Ver: 16.02.01B.0131.17

▲ Maximum Reactions (lbs)

Loc	R	/ U	/ Rw	/ Rh	/ RL	/ W
A	182	/ 9	/ 108	/ -	/ 25	/ 3.5
C	81	/ -	/ 56	/ -	/ -	/ 1.5
B	120	/ 23	/ 47	/ -	/ -	/ 1.5

Wind reactions based on MWFRS
A Min Brg Width Req = 1.5
C Min Brg Width Req = -
B Min Brg Width Req = -
Bearing A is a rigid surface.

Members not listed have forces less than 375#

Lumber

Top chord 2x4 SP M-31
Bot chord 2x4 SP M-31

Wind

Wind loads based on MWFRS with additional C&C member design.

#0 278

04/14/2017

****WARNING**** READ AND FOLLOW ALL NOTES ON THIS DRAWING!
****IMPORTANT**** FURNISH THIS DRAWING TO ALL CONTRACTORS INCLUDING THE INSTALLERS

Trusses require extreme care in fabricating, handling, shipping, installing and bracing. Refer to and follow the latest edition of BCSI (Building Component Safety Information, by TPI and SBCA) for safety practices prior to performing these functions. Installers shall provide temporary bracing per BCSI. Unless noted otherwise,top chord shall have properly attached structural sheathing and bottom chord shall have a properly attached rigid ceiling. Locations shown for permanent lateral restraint of webs shall have bracing installed per BCSI sections B3, B7, or B10, as applicable. Apply plates to each face of truss and position as shown above and on the Joint Details, unless noted otherwise. Refer to drawings 160A-Z for standard plate positions.

Alpine, a division of ITW Building Components Group Inc. shall not be responsible for any deviation from this drawing,any failure to build the truss in conformance with ANSI/TPI 1, or for handling, shipping, installation and bracing of trusses**A seal on this drawing or cover page listing this drawing, indicates acceptance of professional engineering responsibility solely for the design shown. The suitability and use of this drawing for any structure is the responsibility of the Building Designer per ANSI/TPI 1 Sec.2.**

For more information see this job's general notes page and these web sites: ALPINE: www.alpineitw.com; TPI: www.tpinst.org; SBCA: www.sbcindustry.com; ICC: www.iccsafe.org

ALPINE
AN ITW COMPANY
2400 Lake Orange Dr.
Suite 150
Orlando FL, 32837

Job Number: 16-0982 HUBBART RESIDENCE **Truss Label:** J15	Ply: 1 Qty: 1	SEQN: 468513 / T97 JACK FROM: CDM	Cust: R215 JRef: 1VZZ2150001 DrwNo: 104.17.1306.30693 KM / DF 04/14/2017

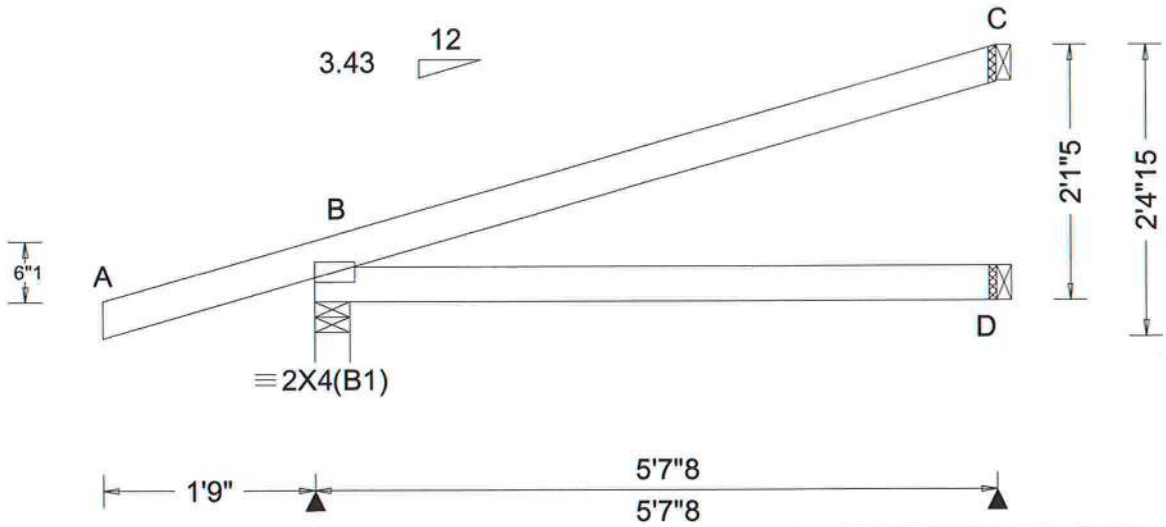

Loading Criteria (psf)
TCLL: 20.00
TCDL: 10.00
BCLL: 0.00
BCDL: 10.00
Des Ld: 40.00
NCBCLL: 10.00
Soffit: 2.00
Load Duration: 1.25
Spacing: 24.0 "

Wind Criteria
Wind Std: ASCE 7-10
Speed: 130 mph
Enclosure: Closed
Risk Category: II
EXP: C
Mean Height: 15.00 ft
TCDL: 5.0 psf
BCDL: 5.0 psf
MWFRS Parallel Dist: h to 2h
C&C Dist a: 3.00 ft
Loc. from endwall: not in 9.00 ft
GCpi: 0.18
Wind Duration: 1.60

Snow Criteria (Pg,Pf in PSF)
Pg: NA Ct: NA CAT: NA
Pf: NA Ce: NA
Lu: NA Cs: NA
Snow Duration: NA

Code / Misc Criteria
Bldg Code: FBC 2014 RES
TPI Std: 2007
Rep Factors Used: Yes
FT/RT:20(0)/10(0)
Plate Type(s):
WAVE

Defl/CSI Criteria
PP Deflection in loc L/defl L/#
VERT(LL): NA
VERT(TL): NA
HORZ(LL): 0.003 D - -
HORZ(TL): 0.007 D - -
Creep Factor: 1.5
Max TC CSI: 0.156
Max BC CSI: 0.125
Max Web CSI: 0.000

VIEW Ver: 16.02.01B.0131.17

▲ Maximum Reactions (lbs)

Loc	R	/ U	/ Rw	/ Rh	/ RL	/ W
B	368	/ 87	/ 238	/ -	/ 56	/ 3.5
D	102	/ -	/ 69	/ -	/ -	/ 1.5
C	142	/ 21	/ 51	/ -	/ -	/ 1.5

Wind reactions based on MWFRS
B Min Brg Width Req = 1.5
D Min Brg Width Req = -
C Min Brg Width Req = -
Bearing B is a rigid surface.

Members not listed have forces less than 375#

Lumber
Top chord 2x4 SP M-31
Bot chord 2x4 SP M-31

Wind
Wind loads based on MWFRS with additional C&C member design.

DOUGLAS FLEMING
LICENSE
No. 66648
STATE OF
FLORIDA
PROFESSIONAL ENGINEER
#0 278

04/14/2017

****WARNING**** READ AND FOLLOW ALL NOTES ON THIS DRAWING!
****IMPORTANT**** FURNISH THIS DRAWING TO ALL CONTRACTORS INCLUDING THE INSTALLERS

Trusses require extreme care in fabricating, handling, shipping, installing and bracing. Refer to and follow the latest edition of BCSI (Building Component Safety Information, by TPI and SBCA) for safety practices prior to performing these functions. Installers shall provide temporary bracing per BCSI. Unless noted otherwise,top chord shall have properly attached structural sheathing and bottom chord shall have a properly attached rigid ceiling. Locations shown for permanent lateral restraint of webs shall have bracing installed per BCSI sections B3, B7, or B10, as applicable. Apply plates to each face of truss and position as shown above and on the Joint Details, unless noted otherwise. Refer to drawings 160A-Z for standard plate positions.

Alpine, a division of ITW Building Components Group Inc. shall not be responsible for any deviation from this drawing,any failure to build the truss in conformance with ANSI/TPI 1, or for handling, shipping, installation and bracing of trusses**A seal on this drawing or cover page listing this drawing, indicates acceptance of professional engineering responsibility solely for the design shown. The suitability and use of this drawing for any structure is the responsibility of the Building Designer per ANSI/TPI 1 Sec.2.**

For more information see this job's general notes page and these web sites: ALPINE: www.alpineitw.com; TPI: www.tpinst.org; SBCA: www.sbcindustry.com; ICC: www.iccsafe.org

ALPINE
AN ITW COMPANY
2400 Lake Orange Dr.
Suite 150
Orlando FL, 32837

Job Number: 16-0982 HUBBART RESIDENCE **Truss Label:** J16	Ply: 1 Qty: 1	SEQN: 468515 / T111 JACK FROM: CDM	Cust: R215 JRef: 1VZZ2150001 DrwNo: 104.17.1306.31693 KM / DF 04/14/2017

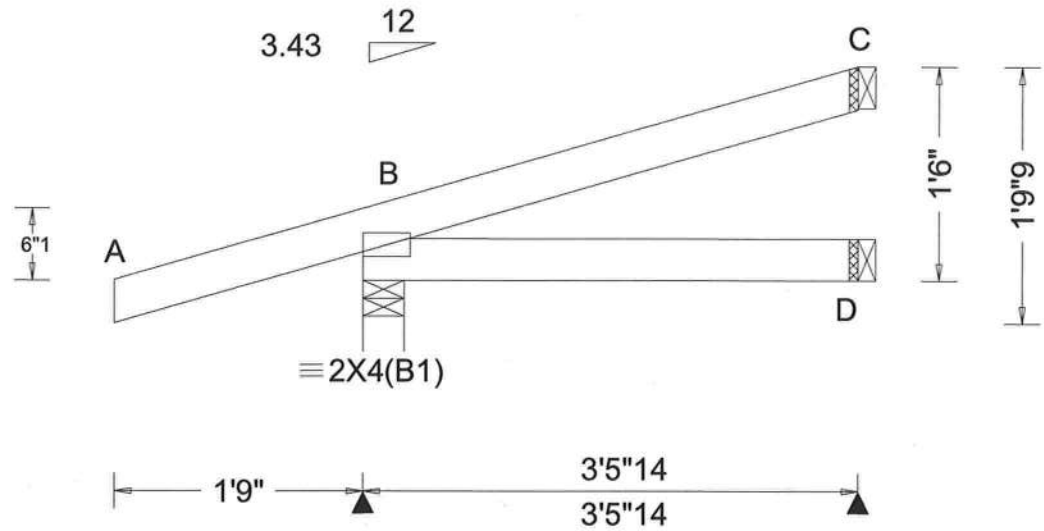

Loading Criteria (psf)	**Wind Criteria**	**Snow Criteria** (Pg,Pf in PSF)	**Defl/CSI Criteria**	**▲Maximum Reactions (lbs)**
TCLL: 20.00 TCDL: 10.00 BCLL: 0.00 BCDL: 10.00 Des Ld: 40.00 NCBCLL: 10.00 Soffit: 2.00 Load Duration: 1.25 Spacing: 24.0 "	Wind Std: ASCE 7-10 Speed: 130 mph Enclosure: Closed Risk Category: II EXP: C Mean Height: 15.00 ft TCDL: 5.0 psf BCDL: 5.0 psf MWFRS Parallel Dist: h/2 to h C&C Dist a: 3.00 ft Loc. from endwall: not in 9.00 ft GCpi: 0.18 Wind Duration: 1.60	Pg: NA Ct: NA CAT: NA Pf: NA Ce: NA Lu: NA Cs: NA Snow Duration: NA **Code / Misc Criteria** Bldg Code: FBC 2014 RES TPI Std: 2007 Rep Factors Used: Yes FT/RT:20(0)/10(0) Plate Type(s): WAVE	PP Deflection in loc L/defl L/# VERT(LL): NA VERT(TL): NA HORZ(LL): 0.001 D - - HORZ(TL): 0.001 D - - Creep Factor: 1.5 Max TC CSI: 0.098 Max BC CSI: 0.044 Max Web CSI: 0.000 VIEW Ver: 16.02.01B.0131.17	Loc R / U / Rw / Rh / RL / W B 296 / 89 / 196 / - / 43 / 3.5 D 60 / - / 45 / - / - / 1.5 C 72 / 25 / 20 / - / - / 1.5 Wind reactions based on MWFRS B Min Brg Width Req = 1.5 D Min Brg Width Req = - C Min Brg Width Req = - Bearing B is a rigid surface. Members not listed have forces less than 375#

Lumber

Top chord 2x4 SP M-31
Bot chord 2x4 SP M-31

Wind

Wind loads based on MWFRS with additional C&C member design.

DOUGLAS FLEMING
LICENSE
No. 66648
STATE OF
FLORIDA
PROFESSIONAL ENGINEER

#0 278

04/14/2017

****WARNING**** READ AND FOLLOW ALL NOTES ON THIS DRAWING!
****IMPORTANT**** FURNISH THIS DRAWING TO ALL CONTRACTORS INCLUDING THE INSTALLERS

Trusses require extreme care in fabricating, handling, shipping, installing and bracing. Refer to and follow the latest edition of BCSI (Building Component Safety Information, by TPI and SBCA) for safety practices prior to performing these functions. Installers shall provide temporary bracing per BCSI. Unless noted otherwise,top chord shall have properly attached structural sheathing and bottom chord shall have a properly attached rigid ceiling. Locations shown for permanent lateral restraint of webs shall have bracing installed per BCSI sections B3, B7, or B10, as applicable. Apply plates to each face of truss and position as shown above and on the Joint Details, unless noted otherwise. Refer to drawings 160A-Z for standard plate positions.

Alpine, a division of ITW Building Components Group Inc. shall not be responsible for any deviation from this drawing,any failure to build the truss in conformance with ANSI/TPI 1, or for handling, shipping, installation and bracing of trusses**A seal on this drawing or cover page listing this drawing, indicates acceptance of professional engineering responsibility solely for the design shown. The suitability and use of this drawing for any structure is the responsibility of the Building Designer per ANSI/TPI 1 Sec.2.**

For more information see this job's general notes page and these web sites: ALPINE: www.alpineitw.com; TPI: www.tpinst.org; SBCA: www.sbcindustry.com; ICC: www.iccsafe.org

ALPINE
AN ITW COMPANY
2400 Lake Orange Dr.
Suite 150
Orlando FL, 32837

Job Number: 16-0982 HUBBART RESIDENCE **Truss Label:** J17	Ply: 1 Qty: 1	SEQN: 468517 / T118 JACK FROM: CDM	Cust: R215 JRef: 1VZZ2150001 DrwNo: 104.17.1306.34477 KM / DF 04/14/2017

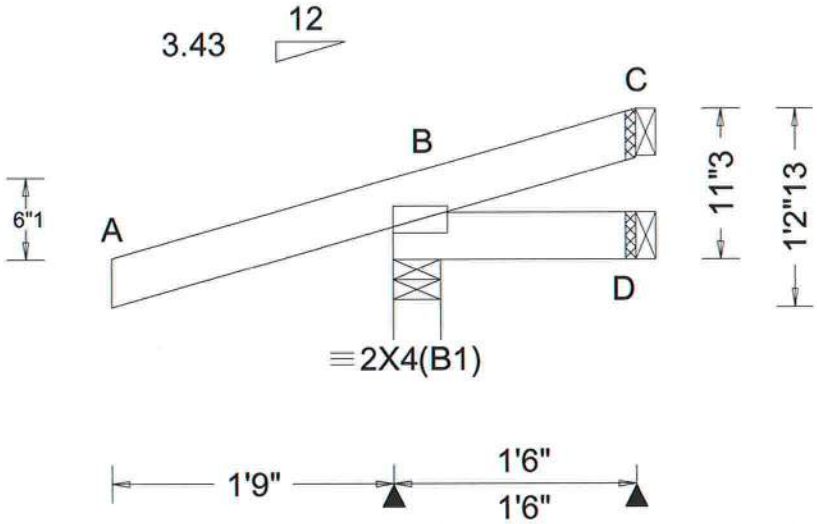

Loading Criteria (psf)
TCLL: 20.00
TCDL: 10.00
BCLL: 0.00
BCDL: 10.00
Des Ld: 40.00
NCBCLL: 10.00
Soffit: 2.00
Load Duration: 1.25
Spacing: 24.0 "

Wind Criteria
Wind Std: ASCE 7-10
Speed: 130 mph
Enclosure: Closed
Risk Category: II
EXP: C
Mean Height: 15.00 ft
TCDL: 5.0 psf
BCDL: 5.0 psf
MWFRS Parallel Dist: h/2 to h
C&C Dist a: 3.00 ft
Loc. from endwall: not in 4.50 ft
GCpi: 0.18
Wind Duration: 1.60

Snow Criteria (Pg,Pf in PSF)
Pg: NA Ct: NA CAT: NA
Pf: NA Ce: NA
Lu: NA Cs: NA
Snow Duration: NA

Code / Misc Criteria
Bldg Code: FBC 2014 RES
TPI Std: 2007
Rep Factors Used: Yes
FT/RT:20(0)/10(0)
Plate Type(s):
WAVE

Defl/CSI Criteria
PP Deflection in loc L/defl L/#
VERT(LL): NA
VERT(TL): NA
HORZ(LL): -0.001 D - -
HORZ(TL): -0.001 D - -
Creep Factor: 1.5
Max TC CSI: 0.090
Max BC CSI: 0.012
Max Web CSI: 0.000

VIEW Ver: 16.02.01B.0131.17

▲ Maximum Reactions (lbs)

Loc	R	/ U	/ Rw	/ Rh	/ RL	/ W
B	267	/ 112	/ 185	/ -	/ 32	/ 3.5
D	20	/ 7	/ 23	/ -	/ -	/ 1.5
C	-30	/ 36	/ 31	/ -	/ -	/ 1.5

Wind reactions based on MWFRS
B Min Brg Width Req = 1.5
D Min Brg Width Req = -
C Min Brg Width Req = -
Bearing B is a rigid surface.

Members not listed have forces less than 375#

Lumber
Top chord 2x4 SP M-31
Bot chord 2x4 SP M-31

Wind
Wind loads based on MWFRS with additional C&C
member design.

#0 278

04/14/2017

****WARNING**** READ AND FOLLOW ALL NOTES ON THIS DRAWING!
****IMPORTANT**** FURNISH THIS DRAWING TO ALL CONTRACTORS INCLUDING THE INSTALLERS

Trusses require extreme care in fabricating, handling, shipping, installing and bracing. Refer to and follow the latest edition of BCSI (Building Component Safety Information, by TPI and SBCA) for safety practices prior to performing these functions. Installers shall provide temporary bracing per BCSI. Unless noted otherwise,top chord shall have properly attached structural sheathing and bottom chord shall have a properly attached rigid ceiling. Locations shown for permanent lateral restraint of webs shall have bracing installed per BCSI sections B3, B7, or B10, as applicable. Apply plates to each face of truss and position as shown above and on the Joint Details, unless noted otherwise. Refer to drawings 160A-Z for standard plate positions.

Alpine, a division of ITW Building Components Group Inc. shall not be responsible for any deviation from this drawing,any failure to build the truss in conformance with ANSI/TPI 1, or for handling, shipping, installation and bracing of trusses**A seal on this drawing or cover page listing this drawing, indicates acceptance of professional engineering responsibility solely for the design shown. The suitability and use of this drawing for any structure is the responsibility of the Building Designer per ANSI/TPI 1 Sec.2.**

For more information see this job's general notes page and these web sites: ALPINE: www.alpineitw.com; TPI: www.tpinst.org; SBCA: www.sbcindustry.com; ICC: www.iccsafe.org

ALPINE
AN ITW COMPANY
2400 Lake Orange Dr.
Suite 150
Orlando FL, 32837

Job Number: 16-0982 HUBBART RESIDENCE **Truss Label:** J18	Ply: 1 Qty: 1	SEQN: 468519 / T109 HIP_ FROM: CDM	Cust: R215 JRef: 1VZZ2150001 DrwNo: 104.17.1306.35990 KM / DF 04/14/2017

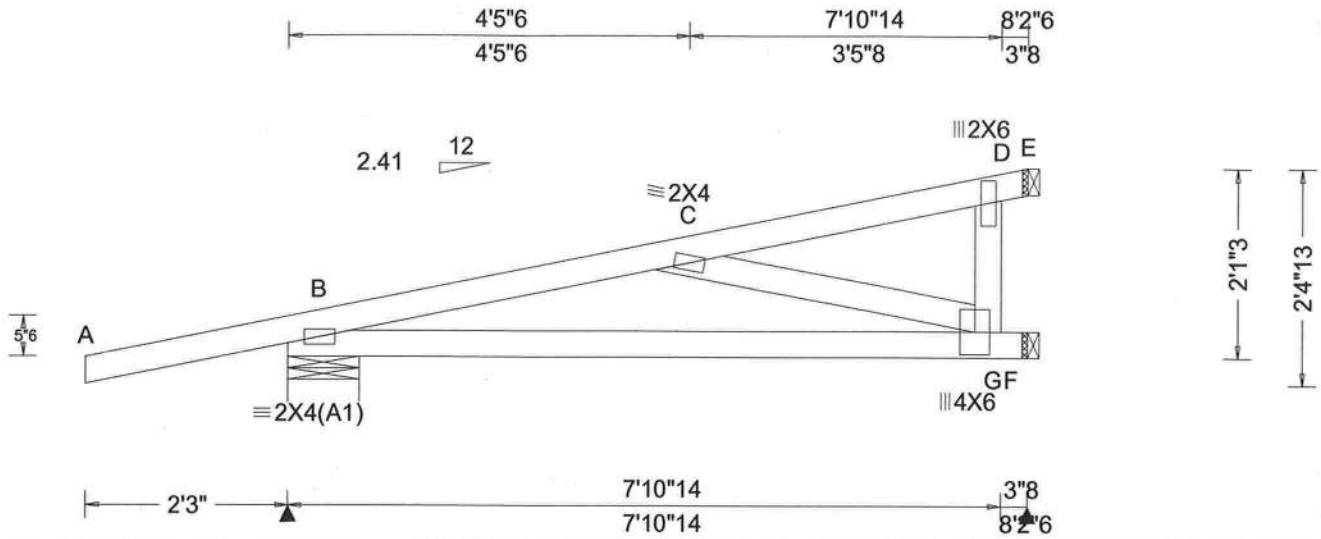

Loading Criteria (psf)
TCLL: 20.00
TCDL: 10.00
BCLL: 0.00
BCDL: 10.00
Des Ld: 40.00
NCBCLL: 10.00
Soffit: 2.00
Load Duration: 1.25
Spacing: 24.0 "

Wind Criteria
Wind Std: ASCE 7-10
Speed: 130 mph
Enclosure: Closed
Risk Category: II
EXP: C
Mean Height: 15.00 ft
TCDL: 5.0 psf
BCDL: 5.0 psf
MWFRS Parallel Dist: 0 to h/2
C&C Dist a: 3.00 ft
Loc. from endwall: not in 4.50 ft
GCpi: 0.18
Wind Duration: 1.60

Snow Criteria (Pg,Pf in PSF)
Pg: NA Ct: NA CAT: NA
Pf: NA Ce: NA
Lu: NA Cs: NA
Snow Duration: NA

Code / Misc Criteria
Bldg Code: FBC 2014 RES
TPI Std: 2007
Rep Factors Used: Yes
FT/RT:20(0)/10(0)
Plate Type(s):
WAVE

Defl/CSI Criteria

PP Deflection in	loc	L/defl	L/#
VERT(LL): 0.013	C	999	240
VERT(TL): 0.032	C	999	180
HORZ(LL): 0.002	G	-	-
HORZ(TL): 0.007	G	-	-

Creep Factor: 1.5
Max TC CSI: 0.182
Max BC CSI: 0.205
Max Web CSI: 0.084

VIEW Ver: 16.02.01B.0131.17

▲ Maximum Reactions (lbs)

Loc	R	/ U	/ Rw	/ Rh	/ RL	/ W
B	496	/ 158	/ -	/ -	/ -	/ 9.3
F	23	/ 206	/ -	/ -	/ -	/ 1.5
E	453	/ -	/ 42	/ -	/ -	/ 1.5

Wind reactions based on MWFRS
B Min Brg Width Req = 1.5
F Min Brg Width Req = -
E Min Brg Width Req = -
Bearing B is a rigid surface.

Members not listed have forces less than 375#

Maximum Top Chord Forces Per Ply (lbs)

Chords	Tens.	Comp.
B - C	184	- 556

Maximum Bot Chord Forces Per Ply (lbs)

Chords	Tens.	Comp.
B - G	529	- 166

Maximum Web Forces Per Ply (lbs)

Webs	Tens.	Comp.	Webs	Tens.	Comp.
C - G	173	- 523	D - G	457	0

Lumber
Top chord 2x4 SP M-31
Bot chord 2x4 SP M-31
Webs 2x4 SP M-31

Special Loads
------(Lumber Dur.Fac.=1.25 / Plate Dur.Fac.=1.25)

TC- From	60 plf at	-2.25 to	60 plf at	2.45
TC- From	30 plf at	2.45 to	30 plf at	5.27
TC- From	60 plf at	5.27 to	60 plf at	8.20
BC- From	4 plf at	-2.25 to	4 plf at	0.00
BC- From	20 plf at	0.00 to	20 plf at	2.45
BC- From	10 plf at	2.45 to	10 plf at	5.27
BC- From	20 plf at	5.27 to	20 plf at	8.20

TC- -12 lb Conc. Load at 2.45
TC- 72 lb Conc. Load at 5.27
TC- 142 lb Conc. Load at 8.20
BC- 20 lb Conc. Load at 2.45
BC- 60 lb Conc. Load at 5.27

Wind
Wind loads and reactions based on MWFRS.

Additional Notes
Negative reaction(s) of -206# MAX. from a non-wind load case requires uplift connection. See Maximum Reactions.

DOUGLAS FLEMING
LICENSE
No. 66648
STATE OF
FLORIDA
PROFESSIONAL ENGINEER
#0 278

04/14/2017

****WARNING**** READ AND FOLLOW ALL NOTES ON THIS DRAWING!
****IMPORTANT**** FURNISH THIS DRAWING TO ALL CONTRACTORS INCLUDING THE INSTALLERS

Trusses require extreme care in fabricating, handling, shipping, installing and bracing. Refer to and follow the latest edition of BCSI (Building Component Safety Information, by TPI and SBCA) for safety practices prior to performing these functions. Installers shall provide temporary bracing per BCSI. Unless noted otherwise,top chord shall have properly attached structural sheathing and bottom chord shall have a properly attached rigid ceiling. Locations shown for permanent lateral restraint of webs shall have bracing installed per BCSI sections B3, B7, or B10, as applicable. Apply plates to each face of truss and position as shown above and on the Joint Details, unless noted otherwise. Refer to drawings 160A-Z for standard plate positions.

Alpine, a division of ITW Building Components Group Inc. shall not be responsible for any deviation from this drawing,any failure to build the truss in conformance with ANSI/TPI 1, or for handling, shipping, installation and bracing of trusses**A seal on this drawing or cover page listing this drawing, indicates acceptance of professional engineering responsibility solely for the design shown. The suitability and use of this drawing for any structure is the responsibility of the Building Designer per ANSI/TPI 1 Sec.2.**

For more information see this job's general notes page and these web sites: ALPINE: www.alpineitw.com; TPI: www.tpinst.org; SBCA: www.sbcindustry.com; ICC: www.iccsafe.org

ALPINE
AN ITW COMPANY
2400 Lake Orange Dr.
Suite 150
Orlando FL, 32837

Job Number: 16-0982 HUBBART RESIDENCE **Truss Label:** J19	Ply: 1 Qty: 1	SEQN: 468521 / T116 JACK FROM: CDM	Cust: R215 JRef: 1VZZ2150001 DrwNo: 104.17.1306.44420 KM / DF 04/14/2017

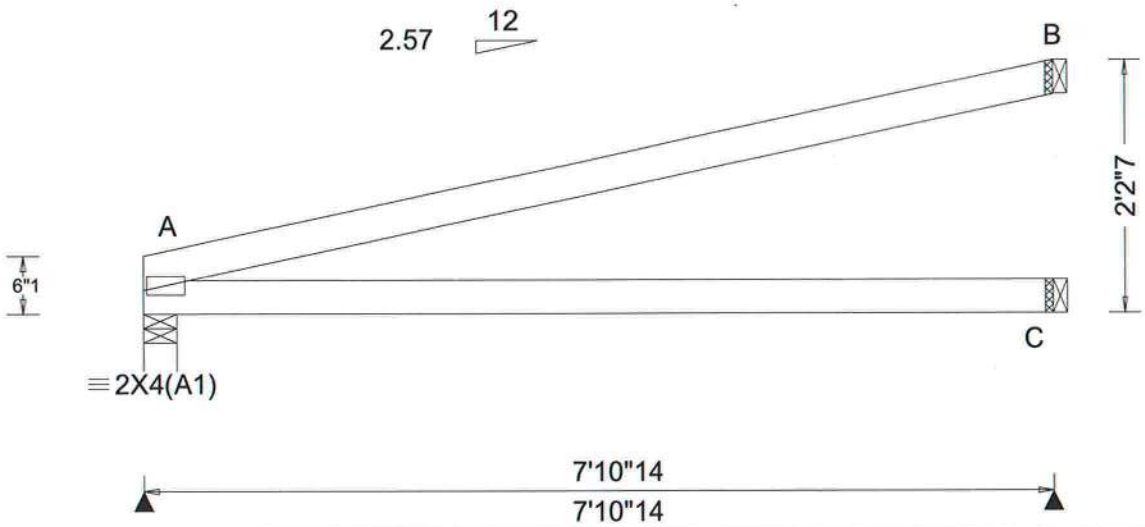

Loading Criteria (psf)
TCLL: 20.00
TCDL: 10.00
BCLL: 0.00
BCDL: 10.00
Des Ld: 40.00
NCBCLL: 10.00
Soffit: 2.00
Load Duration: 1.25
Spacing: 24.0 "

Wind Criteria
Wind Std: ASCE 7-10
Speed: 130 mph
Enclosure: Closed
Risk Category: II
EXP: C
Mean Height: 15.00 ft
TCDL: 5.0 psf
BCDL: 5.0 psf
MWFRS Parallel Dist: h/2 to h
C&C Dist a: 3.00 ft
Loc. from endwall: not in 9.00 ft
GCpi: 0.18
Wind Duration: 1.60

Snow Criteria (Pg,Pf in PSF)
Pg: NA Ct: NA CAT: NA
Pf: NA Ce: NA
Lu: NA Cs: NA
Snow Duration: NA

Code / Misc Criteria
Bldg Code: FBC 2014 RES
TPI Std: 2007
Rep Factors Used: Yes
FT/RT:20(0)/10(0)
Plate Type(s):
WAVE

Defl/CSI Criteria

PP Deflection in	loc	L/defl	L/#
VERT(LL): NA			
VERT(TL): NA			
HORZ(LL): 0.013	C	-	-
HORZ(TL): 0.033	C	-	-

Creep Factor: 1.5
Max TC CSI: 0.386
Max BC CSI: 0.259
Max Web CSI: 0.000

VIEW Ver: 16.02.01B.0131.17

▲Maximum Reactions (lbs)

Loc	R	/ U	/ Rw	/ Rh	/ RL	/ W
A	324	/ 53	/ 167	/ -	/ 48	/ 3.5
C	147	/ -	/ 99	/ -	/ -	/ 1.5
B	217	/ 67	/ 61	/ -	/ -	/ 1.5

Wind reactions based on MWFRS
A Min Brg Width Req = 1.5
C Min Brg Width Req = -
B Min Brg Width Req = -
Bearing A is a rigid surface.

Members not listed have forces less than 375#

Lumber

Top chord 2x4 SP M-31
Bot chord 2x4 SP M-31

Wind

Wind loads based on MWFRS with additional C&C member design.

#0 278
04/14/2017

****WARNING**** READ AND FOLLOW ALL NOTES ON THIS DRAWING!
****IMPORTANT**** FURNISH THIS DRAWING TO ALL CONTRACTORS INCLUDING THE INSTALLERS

Trusses require extreme care in fabricating, handling, shipping, installing and bracing. Refer to and follow the latest edition of BCSI (Building Component Safety Information, by TPI and SBCA) for safety practices prior to performing these functions. Installers shall provide temporary bracing per BCSI. Unless noted otherwise,top chord shall have properly attached structural sheathing and bottom chord shall have a properly attached rigid ceiling. Locations shown for permanent lateral restraint of webs shall have bracing installed per BCSI sections B3, B7, or B10, as applicable. Apply plates to each face of truss and position as shown above and on the Joint Details, unless noted otherwise. Refer to drawings 160A-Z for standard plate positions.

Alpine, a division of ITW Building Components Group Inc. shall not be responsible for any deviation from this drawing,any failure to build the truss in conformance with ANSI/TPI 1, or for handling, shipping, installation and bracing of trusses**A seal on this drawing or cover page listing this drawing, indicates acceptance of professional engineering responsibility solely for the design shown. The suitability and use of this drawing for any structure is the responsibility of the Building Designer per ANSI/TPI 1 Sec.2.**

For more information see this job's general notes page and these web sites: ALPINE: www.alpineitw.com; TPI: www.tpinst.org; SBCA: www.sbcindustry.com; ICC: www.iccsafe.org

ALPINE
AN ITW COMPANY
2400 Lake Orange Dr.
Suite 150
Orlando FL, 32837

Job Number: 16-0982 HUBBART RESIDENCE **Truss Label:** J20	Ply: 1 Qty: 1	SEQN: 468523 / T117 JACK FROM: CDM	Cust: R215 JRef: 1VZZ2150001 DrwNo: 104.17.1306.46190 KM / DF 04/14/2017

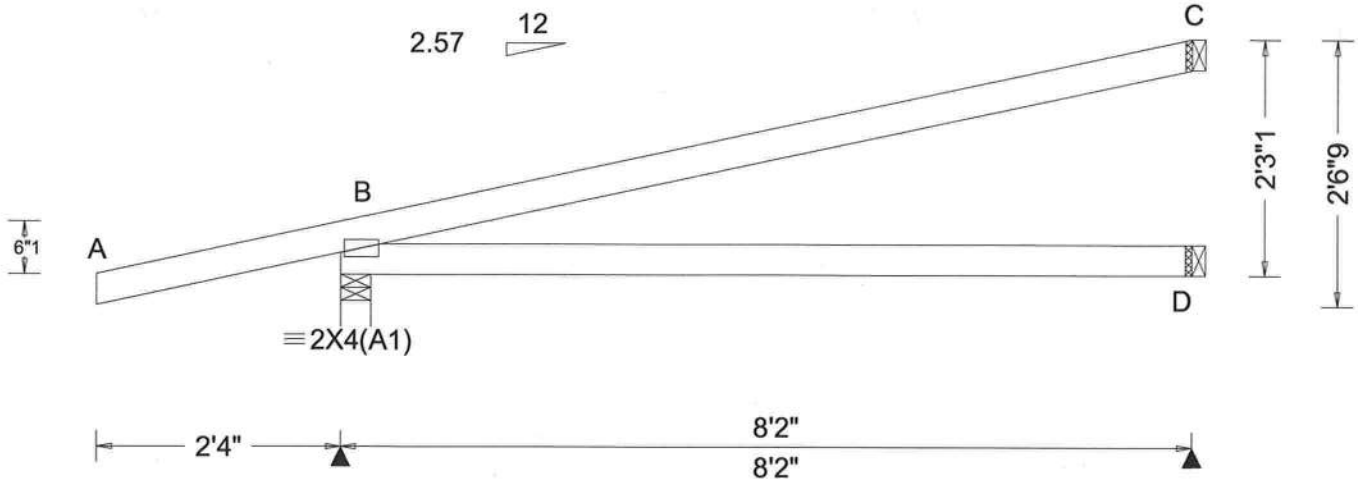

Loading Criteria (psf)
TCLL: 20.00
TCDL: 10.00
BCLL: 0.00
BCDL: 10.00
Des Ld: 40.00
NCBCLL: 10.00
Soffit: 2.00
Load Duration: 1.25
Spacing: 24.0 "

Wind Criteria
Wind Std: ASCE 7-10
Speed: 130 mph
Enclosure: Closed
Risk Category: II
EXP: C
Mean Height: 15.00 ft
TCDL: 5.0 psf
BCDL: 5.0 psf
MWFRS Parallel Dist: h/2 to h
C&C Dist a: 3.00 ft
Loc. from endwall: not in 4.50 ft
GCpi: 0.18
Wind Duration: 1.60

Snow Criteria (Pg,Pf in PSF)
Pg: NA Ct: NA CAT: NA
Pf: NA Ce: NA
Lu: NA Cs: NA
Snow Duration: NA

Code / Misc Criteria
Bldg Code: FBC 2014 RES
TPI Std: 2007
Rep Factors Used: Yes
FT/RT:20(0)/10(0)
Plate Type(s):
WAVE

Defl/CSI Criteria
PP Deflection in loc L/defl L/#
VERT(LL): NA
VERT(TL): NA
HORZ(LL): 0.011 D - -
HORZ(TL): 0.025 D - -
Creep Factor: 1.5
Max TC CSI: 0.363
Max BC CSI: 0.263
Max Web CSI: 0.000

VIEW Ver: 16.02.01B.0131.17

▲ Maximum Reactions (lbs)

Loc	R	/ U	/ Rw	/ Rh	/ RL	/ W
B	510	/ 157	/ 282	/ -	/ 71	/ 3.5
D	148	/ -	/ 100	/ -	/ -	/ 1.5
C	210	/ 65	/ 60	/ -	/ -	/ 1.5

Wind reactions based on MWFRS
B Min Brg Width Req = 1.5
D Min Brg Width Req = -
C Min Brg Width Req = -
Bearing B is a rigid surface.

Members not listed have forces less than 375#

Lumber
Top chord 2x4 SP M-31
Bot chord 2x4 SP M-31

Wind
Wind loads based on MWFRS with additional C&C member design.

#0 278
04/14/2017

****WARNING**** READ AND FOLLOW ALL NOTES ON THIS DRAWING!
****IMPORTANT**** FURNISH THIS DRAWING TO ALL CONTRACTORS INCLUDING THE INSTALLERS

Trusses require extreme care in fabricating, handling, shipping, installing and bracing. Refer to and follow the latest edition of BCSI (Building Component Safety Information, by TPI and SBCA) for safety practices prior to performing these functions. Installers shall provide temporary bracing per BCSI. Unless noted otherwise,top chord shall have properly attached structural sheathing and bottom chord shall have a properly attached rigid ceiling. Locations shown for permanent lateral restraint of webs shall have bracing installed per BCSI sections B3, B7, or B10, as applicable. Apply plates to each face of truss and position as shown above and on the Joint Details, unless noted otherwise. Refer to drawings 160A-Z for standard plate positions.

Alpine, a division of ITW Building Components Group Inc. shall not be responsible for any deviation from this drawing,any failure to build the truss in conformance with ANSI/TPI 1, or for handling, shipping, installation and bracing of trusses**A seal on this drawing or cover page listing this drawing, indicates acceptance of professional engineering responsibility solely for the design shown. The suitability and use of this drawing for any structure is the responsibility of the Building Designer per ANSI/TPI 1 Sec.2.**

For more information see this job's general notes page and these web sites: ALPINE: www.alpineitw.com; TPI: www.tpinst.org; SBCA: www.sbcindustry.com; ICC: www.iccsafe.org

ALPINE AN ITW COMPANY
2400 Lake Orange Dr.
Suite 150
Orlando FL, 32837

Job Number: 16-0982 HUBBART RESIDENCE **Truss Label:** J21	Ply: 1 Qty: 1	SEQN: 468525 / T108 JACK FROM: CDM	Cust: R215 JRef: 1VZZ2150001 DrwNo: 104.17.1306.47333 KM / DF 04/14/2017

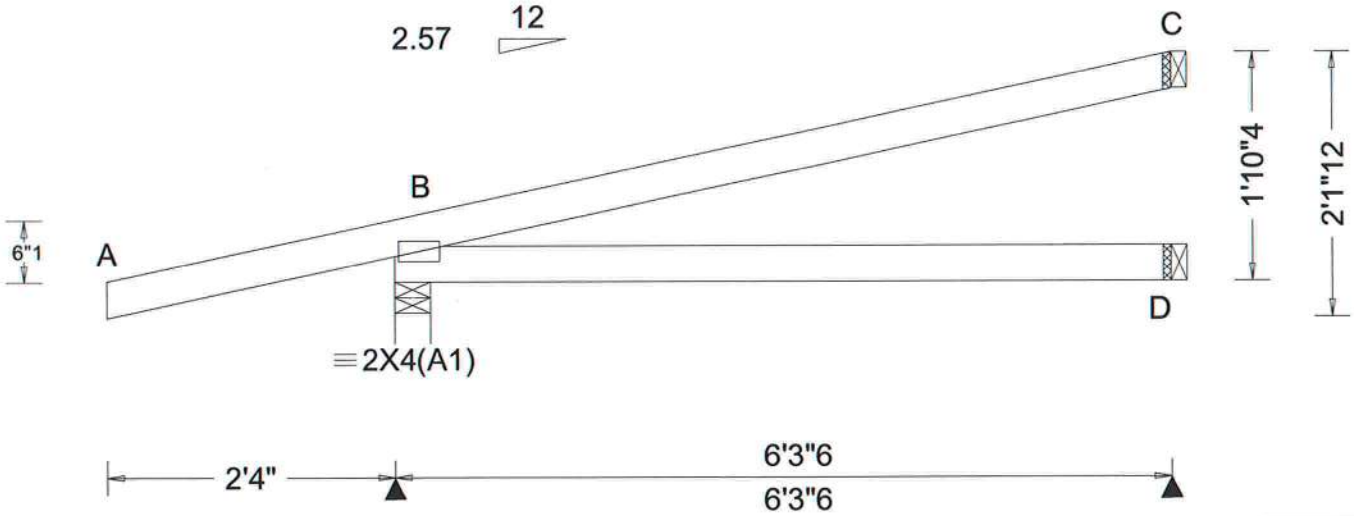

Loading Criteria (psf)
TCLL: 20.00
TCDL: 10.00
BCLL: 0.00
BCDL: 10.00
Des Ld: 40.00
NCBCLL: 10.00
Soffit: 2.00
Load Duration: 1.25
Spacing: 24.0 "

Wind Criteria
Wind Std: ASCE 7-10
Speed: 130 mph
Enclosure: Closed
Risk Category: II
EXP: C
Mean Height: 15.00 ft
TCDL: 5.0 psf
BCDL: 5.0 psf
MWFRS Parallel Dist: 0 to h/2
C&C Dist a: 3.00 ft
Loc. from endwall: not in 4.50 ft
GCpi: 0.18
Wind Duration: 1.60

Snow Criteria (Pg,Pf in PSF)
Pg: NA Ct: NA CAT: NA
Pf: NA Ce: NA
Lu: NA Cs: NA
Snow Duration: NA

Code / Misc Criteria
Bldg Code: FBC 2014 RES
TPI Std: 2007
Rep Factors Used: Yes
FT/RT:20(0)/10(0)
Plate Type(s):
WAVE

Defl/CSI Criteria
PP Deflection in loc L/defl L/#
VERT(LL): NA
VERT(TL): NA
HORZ(LL): 0.003 D - -
HORZ(TL): 0.009 D - -
Creep Factor: 1.5
Max TC CSI: 0.183
Max BC CSI: 0.149
Max Web CSI: 0.000

VIEW Ver: 16.02.01B.0131.17

▲Maximum Reactions (lbs)

Loc	R	/ U	/ Rw	/ Rh	/ RL	/ W
B	441	/ 151	/ 247	/ -	/ 61	/ 3.5
D	112	/ -	/ 77	/ -	/ -	/ 1.5
C	153	/ 48	/ 44	/ -	/ -	/ 1.5

Wind reactions based on MWFRS
B Min Brg Width Req = 1.5
D Min Brg Width Req = -
C Min Brg Width Req = -
Bearing B is a rigid surface.

Members not listed have forces less than 375#

Lumber
Top chord 2x4 SP M-31
Bot chord 2x4 SP M-31

Wind
Wind loads based on MWFRS with additional C&C member design.

#0 278
04/14/2017

****WARNING**** READ AND FOLLOW ALL NOTES ON THIS DRAWING!
****IMPORTANT**** FURNISH THIS DRAWING TO ALL CONTRACTORS INCLUDING THE INSTALLERS

Trusses require extreme care in fabricating, handling, shipping, installing and bracing. Refer to and follow the latest edition of BCSI (Building Component Safety Information, by TPI and SBCA) for safety practices prior to performing these functions. Installers shall provide temporary bracing per BCSI. Unless noted otherwise,top chord shall have properly attached structural sheathing and bottom chord shall have a properly attached rigid ceiling. Locations shown for permanent lateral restraint of webs shall have bracing installed per BCSI sections B3, B7, or B10, as applicable. Apply plates to each face of truss and position as shown above and on the Joint Details, unless noted otherwise. Refer to drawings 160A-Z for standard plate positions.

Alpine, a division of ITW Building Components Group Inc. shall not be responsible for any deviation from this drawing,any failure to build the truss in conformance with ANSI/TPI 1, or for handling, shipping, installation and bracing of trusses**A seal on this drawing or cover page listing this drawing, indicates acceptance of professional engineering responsibility solely for the design shown. The suitability and use of this drawing for any structure is the responsibility of the Building Designer per ANSI/TPI 1 Sec.2.**

For more information see this job's general notes page and these web sites: ALPINE: www.alpineitw.com; TPI: www.tpinst.org; SBCA: www.sbcindustry.com; ICC: www.iccsafe.org

ALPINE
AN ITW COMPANY
2400 Lake Orange Dr.
Suite 150
Orlando FL, 32837

Job Number: 16-0982 HUBBART RESIDENCE **Truss Label:** J22	Ply: 1 Qty: 1	SEQN: 468527 / T119 JACK FROM: CDM	Cust: R215 JRef: 1VZZ2150001 DrwNo: 104.17.1306.49530 KM / DF 04/14/2017

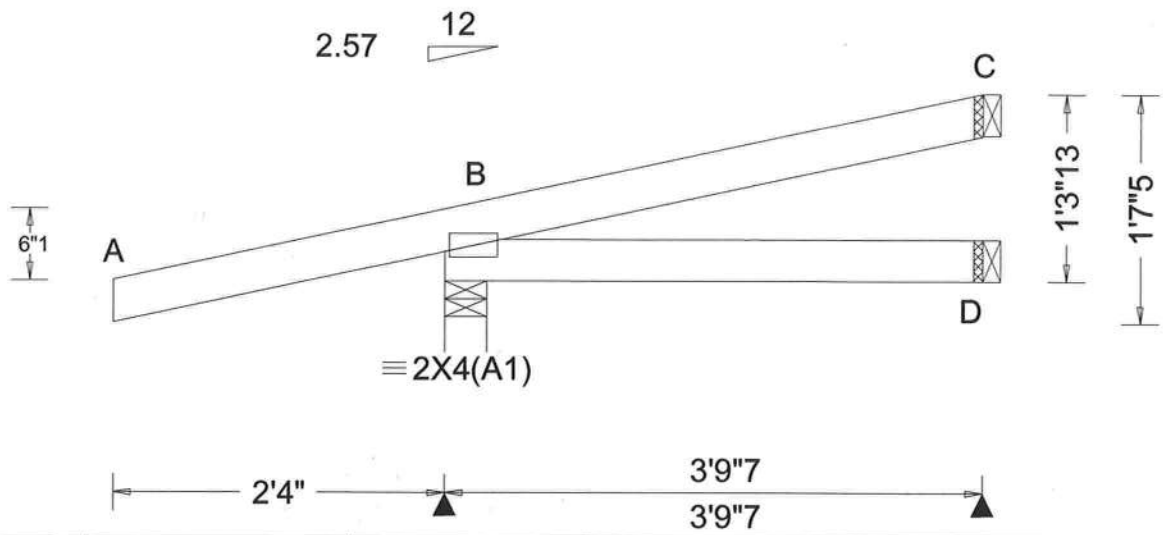

Loading Criteria (psf)	**Wind Criteria**	**Snow Criteria** (Pg,Pf in PSF)	**Defl/CSI Criteria**
TCLL: 20.00 TCDL: 10.00 BCLL: 0.00 BCDL: 10.00 Des Ld: 40.00 NCBCLL: 10.00 Soffit: 2.00 Load Duration: 1.25 Spacing: 24.0 "	Wind Std: ASCE 7-10 Speed: 130 mph Enclosure: Closed Risk Category: II EXP: C Mean Height: 15.00 ft TCDL: 5.0 psf BCDL: 5.0 psf MWFRS Parallel Dist: 0 to h/2 C&C Dist a: 3.00 ft Loc. from endwall: Any GCpi: 0.18 Wind Duration: 1.60	Pg: NA Ct: NA CAT: NA Pf: NA Ce: NA Lu: NA Cs: NA Snow Duration: NA **Code / Misc Criteria** Bldg Code: FBC 2014 RES TPI Std: 2007 Rep Factors Used: Yes FT/RT:20(0)/10(0) Plate Type(s): WAVE	PP Deflection in loc L/defl L/# VERT(LL): NA VERT(TL): NA HORZ(LL): 0.002 D - - HORZ(TL): 0.003 D - - Creep Factor: 1.5 Max TC CSI: 0.268 Max BC CSI: 0.067 Max Web CSI: 0.000 VIEW Ver: 16.02.01B.0131.17

▲ Maximum Reactions (lbs)

Loc	R	/ U	/ Rw	/ Rh	/ RL	/ W
B	363	/ 151	/ 209	/ -	/ 47	/ 3.5
D	62	/ 3	/ 52	/ -	/ -	/ 1.5
C	67	/ 22	/ 20	/ -	/ -	/ 1.5

Wind reactions based on MWFRS
B Min Brg Width Req = 1.5
D Min Brg Width Req = -
C Min Brg Width Req = -
Bearing B is a rigid surface.

Members not listed have forces less than 375#

Lumber

Top chord 2x4 SP M-31
Bot chord 2x4 SP M-31

Wind

Wind loads based on MWFRS with additional C&C member design.

#0 278

04/14/2017

****WARNING**** READ AND FOLLOW ALL NOTES ON THIS DRAWING!
****IMPORTANT**** FURNISH THIS DRAWING TO ALL CONTRACTORS INCLUDING THE INSTALLERS

Trusses require extreme care in fabricating, handling, shipping, installing and bracing. Refer to and follow the latest edition of BCSI (Building Component Safety Information, by TPI and SBCA) for safety practices prior to performing these functions. Installers shall provide temporary bracing per BCSI. Unless noted otherwise,top chord shall have properly attached structural sheathing and bottom chord shall have a properly attached rigid ceiling. Locations shown for permanent lateral restraint of webs shall have bracing installed per BCSI sections B3, B7, or B10, as applicable. Apply plates to each face of truss and position as shown above and on the Joint Details, unless noted otherwise. Refer to drawings 160A-Z for standard plate positions.

Alpine, a division of ITW Building Components Group Inc. shall not be responsible for any deviation from this drawing,any failure to build the truss in conformance with ANSI/TPI 1, or for handling, shipping, installation and bracing of trusses**A seal on this drawing or cover page listing this drawing, indicates acceptance of professional engineering responsibility solely for the design shown. The suitability and use of this drawing for any structure is the responsibility of the Building Designer per ANSI/TPI 1 Sec.2.**

For more information see this job's general notes page and these web sites: ALPINE: www.alpineitw.com; TPI: www.tpinst.org; SBCA: www.sbcindustry.com; ICC: www.iccsafe.org

ALPINE
AN ITW COMPANY
2400 Lake Orange Dr.
Suite 150
Orlando FL, 32837

Job Number: 16-0982 HUBBART RESIDENCE **Truss Label:** J23	Ply: 1 Qty: 1	SEQN: 468529 / T114 JACK FROM: CDM	Cust: R215 JRef: 1VZZ2150001 DrwNo: 104.17.1306.50987 KM / DF 04/14/2017

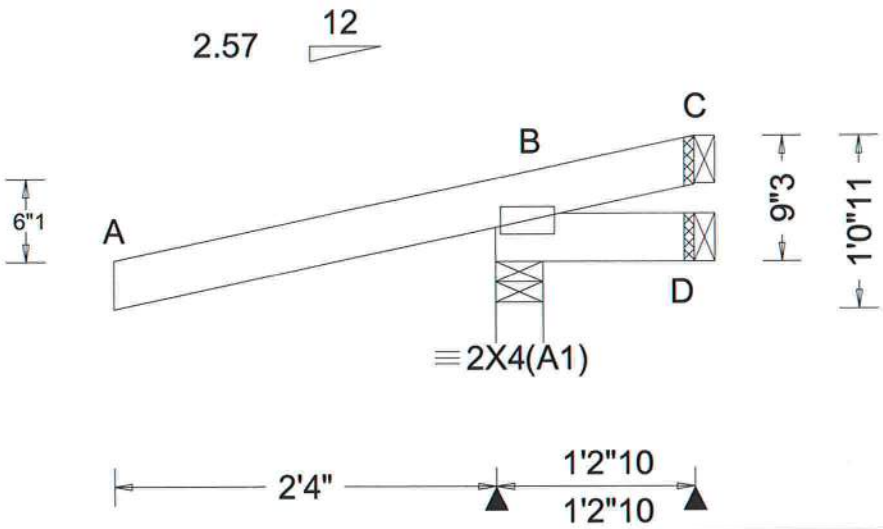

Loading Criteria (psf)	**Wind Criteria**	**Snow Criteria** (Pg,Pf in PSF)	**Defl/CSI Criteria**	▲ **Maximum Reactions (lbs)**
TCLL: 20.00 TCDL: 10.00 BCLL: 0.00 BCDL: 10.00 Des Ld: 40.00 NCBCLL: 10.00 Soffit: 2.00 Load Duration: 1.25 Spacing: 24.0 "	Wind Std: ASCE 7-10 Speed: 130 mph Enclosure: Closed Risk Category: II EXP: C Mean Height: 15.00 ft TCDL: 5.0 psf BCDL: 5.0 psf MWFRS Parallel Dist: 0 to h/2 C&C Dist a: 3.00 ft Loc. from endwall: Any GCpi: 0.18 Wind Duration: 1.60	Pg: NA Ct: NA CAT: NA Pf: NA Ce: NA Lu: NA Cs: NA Snow Duration: NA **Code / Misc Criteria** Bldg Code: FBC 2014 RES TPI Std: 2007 Rep Factors Used: Yes FT/RT:20(0)/10(0) Plate Type(s): WAVE	PP Deflection in loc L/defl L/# VERT(LL): NA VERT(TL): NA HORZ(LL): -0.001 D - - HORZ(TL): -0.002 D - - Creep Factor: 1.5 Max TC CSI: 0.256 Max BC CSI: 0.034 Max Web CSI: 0.000 VIEW Ver: 16.02.01B.0131.17	Loc R / U / Rw / Rh / RL / W B 390 / 220 / 237 / - / 32 / 3.5 D 6 / 26 / 32 / - / - / 1.5 C -116 / 116 / 86 / - / - / 1.5 Wind reactions based on MWFRS B Min Brg Width Req = 1.5 D Min Brg Width Req = - C Min Brg Width Req = - Bearing B is a rigid surface. Members not listed have forces less than 375#

Lumber

Top chord 2x4 SP M-31
Bot chord 2x4 SP M-31

Wind

Wind loads based on MWFRS with additional C&C member design.

DOUGLAS FLEMING
LICENSE
No. 66648
STATE OF
FLORIDA
PROFESSIONAL ENGINEER

#0 278

04/14/2017

****WARNING**** READ AND FOLLOW ALL NOTES ON THIS DRAWING!
****IMPORTANT**** FURNISH THIS DRAWING TO ALL CONTRACTORS INCLUDING THE INSTALLERS

Trusses require extreme care in fabricating, handling, shipping, installing and bracing. Refer to and follow the latest edition of BCSI (Building Component Safety Information, by TPI and SBCA) for safety practices prior to performing these functions. Installers shall provide temporary bracing per BCSI. Unless noted otherwise,top chord shall have properly attached structural sheathing and bottom chord shall have a properly attached rigid ceiling. Locations shown for permanent lateral restraint of webs shall have bracing installed per BCSI sections B3, B7, or B10, as applicable. Apply plates to each face of truss and position as shown above and on the Joint Details, unless noted otherwise. Refer to drawings 160A-Z for standard plate positions.

Alpine, a division of ITW Building Components Group Inc. shall not be responsible for any deviation from this drawing,any failure to build the truss in conformance with ANSI/TPI 1, or for handling, shipping, installation and bracing of trusses**A seal on this drawing or cover page listing this drawing, indicates acceptance of professional engineering responsibility solely for the design shown. The suitability and use of this drawing for any structure is the responsibility of the Building Designer per ANSI/TPI 1 Sec.2.**

For more information see this job's general notes page and these web sites: ALPINE: www.alpineitw.com; TPI: www.tpinst.org; SBCA: www.sbcindustry.com; ICC: www.iccsafe.org

ALPINE
AN ITW COMPANY
2400 Lake Orange Dr.
Suite 150
Orlando FL, 32837

Job Number: 16-0982 HUBBART RESIDENCE **Truss Label:** J24	Ply: 1 Qty: 1	SEQN: 468544 / T113 HIP_ FROM: CDM	Cust: R215 JRef: 1VZZ2150001 DrwNo: 104.17.1306.52770 KM / DF 04/14/2017

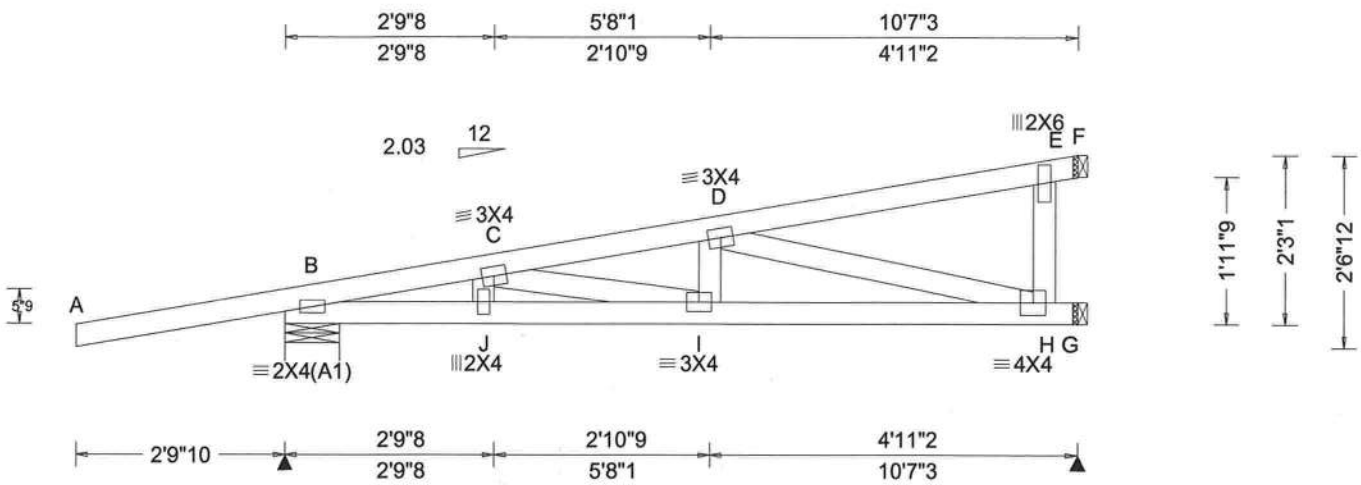

Loading Criteria (psf)
TCLL: 20.00
TCDL: 10.00
BCLL: 0.00
BCDL: 10.00
Des Ld: 40.00
NCBCLL: 10.00
Soffit: 2.00
Load Duration: 1.25
Spacing: 24.0 "

Wind Criteria
Wind Std: ASCE 7-10
Speed: 130 mph
Enclosure: Closed
Risk Category: II
EXP: C
Mean Height: 15.00 ft
TCDL: 5.0 psf
BCDL: 5.0 psf
MWFRS Parallel Dist: 0 to h/2
C&C Dist a: 3.00 ft
Loc. from endwall: not in 9.00 ft
GCpi: 0.18
Wind Duration: 1.60

Snow Criteria (Pg,Pf in PSF)
Pg: NA Ct: NA CAT: NA
Pf: NA Ce: NA
Lu: NA Cs: NA
Snow Duration: NA

Code / Misc Criteria
Bldg Code: FBC 2014 RES
TPI Std: 2007
Rep Factors Used: Yes
FT/RT:20(0)/10(0)
Plate Type(s):
WAVE

Defl/CSI Criteria

PP Deflection in	loc	L/defl	L/#
VERT(LL): 0.042	I	999	240
VERT(TL): 0.101	I	999	180
HORZ(LL): 0.007	H	-	-
HORZ(TL): 0.017	H	-	-

Creep Factor: 1.5
Max TC CSI: 0.280
Max BC CSI: 0.318
Max Web CSI: 0.290

VIEW Ver: 16.02.01B.0131.17

▲ Maximum Reactions (lbs)

Loc	R	/ U	/ Rw	/ Rh	/ RL	/ W
B	719	/ 178	/ -	/ -	/ -	/ 8.8
G	370	/ 143	/ -	/ -	/ -	/ 1.5
F	207	/ -	/ 43	/ -	/ -	/ 1.5

Wind reactions based on MWFRS
B Min Brg Width Req = 1.5
G Min Brg Width Req = -
F Min Brg Width Req = -
Bearing B is a rigid surface.

Members not listed have forces less than 375#

Maximum Top Chord Forces Per Ply (lbs)

Chords	Tens.	Comp.	Chords	Tens.	Comp.
B - C	126	- 1055	C - D	230	- 1409

Maximum Bot Chord Forces Per Ply (lbs)

Chords	Tens.	Comp.	Chords	Tens.	Comp.
B - J	1011	- 115	I - H	1344	- 232
J - I	1035	- 126			

Maximum Web Forces Per Ply (lbs)

Webs	Tens.	Comp.	Webs	Tens.	Comp.
C - I	513	- 100	D - H	233	- 1348

Lumber
Top chord 2x4 SP M-31
Bot chord 2x4 SP M-31
Webs 2x4 SP M-31

Special Loads
------(Lumber Dur.Fac.=1.25 / Plate Dur.Fac.=1.25)
TC- From 60 plf at -2.80 to 60 plf at 5.00
TC- From 30 plf at 5.00 to 30 plf at 8.20
TC- From 60 plf at 8.20 to 60 plf at 10.60
BC- From 4 plf at -2.80 to 4 plf at 0.00
BC- From 20 plf at 0.00 to 20 plf at 5.00
BC- From 10 plf at 5.00 to 10 plf at 8.20
BC- From 20 plf at 8.20 to 20 plf at 10.60
TC- 67 lb Conc. Load at 5.00
TC- 153 lb Conc. Load at 8.20
BC- 62 lb Conc. Load at 5.00
BC- 112 lb Conc. Load at 8.20

Wind
Wind loads and reactions based on MWFRS.

DOUGLAS FLEMING
LICENSE
No. 66648
STATE OF
FLORIDA
PROFESSIONAL ENGINEER
#0 278

04/14/2017

****WARNING**** READ AND FOLLOW ALL NOTES ON THIS DRAWING!
****IMPORTANT**** FURNISH THIS DRAWING TO ALL CONTRACTORS INCLUDING THE INSTALLERS

Trusses require extreme care in fabricating, handling, shipping, installing and bracing. Refer to and follow the latest edition of BCSI (Building Component Safety Information, by TPI and SBCA) for safety practices prior to performing these functions. Installers shall provide temporary bracing per BCSI. Unless noted otherwise,top chord shall have properly attached structural sheathing and bottom chord shall have a properly attached rigid ceiling. Locations shown for permanent lateral restraint of webs shall have bracing installed per BCSI sections B3, B7, or B10, as applicable. Apply plates to each face of truss and position as shown above and on the Joint Details, unless noted otherwise. Refer to drawings 160A-Z for standard plate positions.

Alpine, a division of ITW Building Components Group Inc. shall not be responsible for any deviation from this drawing,any failure to build the truss in conformance with ANSI/TPI 1, or for handling, shipping, installation and bracing of trusses**A seal on this drawing or cover page listing this drawing, indicates acceptance of professional engineering responsibility solely for the design shown. The suitability and use of this drawing for any structure is the responsibility of the Building Designer per ANSI/TPI 1 Sec.2.**

For more information see this job's general notes page and these web sites: ALPINE: www.alpineitw.com; TPI: www.tpinst.org; SBCA: www.sbcindustry.com; ICC: www.iccsafe.org

ALPINE
AN ITW COMPANY
2400 Lake Orange Dr.
Suite 150
Orlando FL, 32837

Job Number: 16-0982 HUBBART RESIDENCE **Truss Label:** J25	Ply: 1 Qty: 1	SEQN: 468531 / T135 JACK FROM: CDM	Cust: R215 JRef: 1VZZ2150001 DrwNo: 104.17.1306.54093 KM / DF 04/14/2017

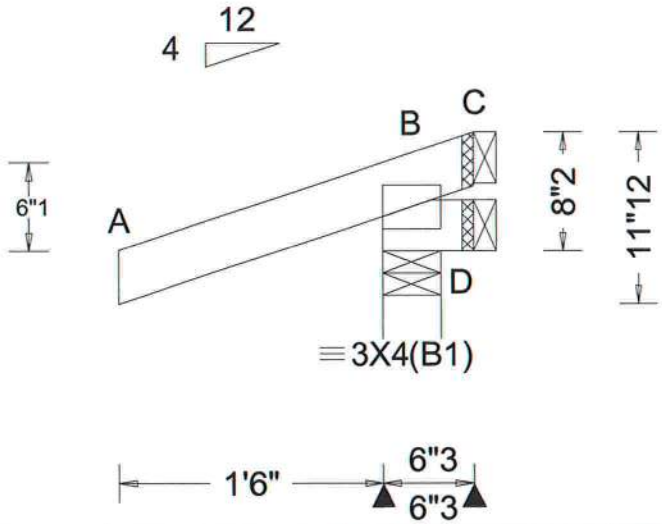

Loading Criteria (psf)	**Wind Criteria**	**Snow Criteria** (Pg,Pf in PSF)	**Defl/CSI Criteria**
TCLL: 20.00 TCDL: 10.00 BCLL: 0.00 BCDL: 10.00 Des Ld: 40.00 NCBCLL: 10.00 Soffit: 2.00 Load Duration: 1.25 Spacing: 24.0 "	Wind Std: ASCE 7-10 Speed: 130 mph Enclosure: Closed Risk Category: II EXP: C Mean Height: 15.00 ft TCDL: 5.0 psf BCDL: 5.0 psf MWFRS Parallel Dist: 0 to h/2 C&C Dist a: 3.00 ft Loc. from endwall: Any GCpi: 0.18 Wind Duration: 1.60	Pg: NA Ct: NA CAT: NA Pf: NA Ce: NA Lu: NA Cs: NA Snow Duration: NA **Code / Misc Criteria** Bldg Code: FBC 2014 RES TPI Std: 2007 Rep Factors Used: Yes FT/RT:20(0)/10(0) Plate Type(s): WAVE	PP Deflection in loc L/defl L/# VERT(LL): NA VERT(TL): NA HORZ(LL): -0.000 C - - HORZ(TL): -0.001 C - - Creep Factor: 1.5 Max TC CSI: 0.102 Max BC CSI: 0.011 Max Web CSI: 0.000 VIEW Ver: 16.02.01B.0131.17

▲ Maximum Reactions (lbs)

Loc	R	/ U	/ Rw	/ Rh	/ RL	/ W
B	359	/ 155	/ 274	/ -	/ 23	/ 4.0
D	-28	/ 28	/ 17	/ -	/ -	/ 1.5
C	-191	/ 191	/ 94	/ -	/ -	/ 1.5

Wind reactions based on MWFRS
B Min Brg Width Req = 1.5
D Min Brg Width Req = -
C Min Brg Width Req = -
Bearing B is a rigid surface.

Members not listed have forces less than 375#

Lumber

Top chord 2x4 SP M-31
Bot chord 2x4 SP M-31

Wind

Wind loads based on MWFRS with additional C&C member design.

Additional Notes

Negative reaction(s) of -191# MAX. from a non-wind load case requires uplift connection. See Maximum Reactions.

04/14/2017

****WARNING**** READ AND FOLLOW ALL NOTES ON THIS DRAWING!
****IMPORTANT**** FURNISH THIS DRAWING TO ALL CONTRACTORS INCLUDING THE INSTALLERS

Trusses require extreme care in fabricating, handling, shipping, installing and bracing. Refer to and follow the latest edition of BCSI (Building Component Safety Information, by TPI and SBCA) for safety practices prior to performing these functions. Installers shall provide temporary bracing per BCSI. Unless noted otherwise,top chord shall have properly attached structural sheathing and bottom chord shall have a properly attached rigid ceiling. Locations shown for permanent lateral restraint of webs shall have bracing installed per BCSI sections B3, B7, or B10, as applicable. Apply plates to each face of truss and position as shown above and on the Joint Details, unless noted otherwise. Refer to drawings 160A-Z for standard plate positions.

Alpine, a division of ITW Building Components Group Inc. shall not be responsible for any deviation from this drawing,any failure to build the truss in conformance with ANSI/TPI 1, or for handling, shipping, installation and bracing of trusses**A seal on this drawing or cover page listing this drawing, indicates acceptance of professional engineering responsibility solely for the design shown. The suitability and use of this drawing for any structure is the responsibility of the Building Designer per ANSI/TPI 1 Sec.2.**

For more information see this job's general notes page and these web sites: ALPINE: www.alpineitw.com; TPI: www.tpinst.org; SBCA: www.sbcindustry.com; ICC: www.iccsafe.org

ALPINE
AN ITW COMPANY
2400 Lake Orange Dr.
Suite 150
Orlando FL, 32837

Job Number: 16-0982 HUBBART RESIDENCE **Truss Label:** J26	Ply: 1 Qty: 1	SEQN: 468533 / T134 JACK FROM: CDM	Cust: R215 JRef: 1VZZ2150001 DrwNo: 104.17.1306.55193 KM / DF 04/14/2017

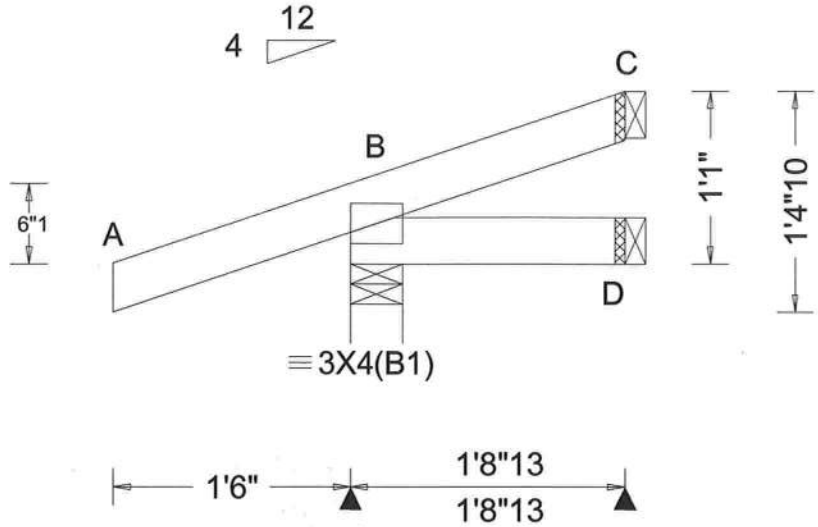

Loading Criteria (psf)
TCLL: 20.00
TCDL: 10.00
BCLL: 0.00
BCDL: 10.00
Des Ld: 40.00
NCBCLL: 10.00
Soffit: 2.00
Load Duration: 1.25
Spacing: 24.0 "

Wind Criteria
Wind Std: ASCE 7-10
Speed: 130 mph
Enclosure: Closed
Risk Category: II
EXP: C
Mean Height: 15.00 ft
TCDL: 5.0 psf
BCDL: 5.0 psf
MWFRS Parallel Dist: 0 to h/2
C&C Dist a: 3.00 ft
Loc. from endwall: not in 4.50 ft
GCpi: 0.18
Wind Duration: 1.60

Snow Criteria (Pg,Pf in PSF)
Pg: NA Ct: NA CAT: NA
Pf: NA Ce: NA
Lu: NA Cs: NA
Snow Duration: NA

Code / Misc Criteria
Bldg Code: FBC 2014 RES
TPI Std: 2007
Rep Factors Used: Yes
FT/RT:20(0)/10(0)
Plate Type(s):
WAVE

Defl/CSI Criteria
PP Deflection in loc L/defl L/#
VERT(LL): NA
VERT(TL): NA
HORZ(LL): -0.000 D - -
HORZ(TL): -0.001 D - -
Creep Factor: 1.5
Max TC CSI: 0.065
Max BC CSI: 0.010
Max Web CSI: 0.000

VIEW Ver: 16.02.01B.0131.17

▲ Maximum Reactions (lbs)

Loc	R	/ U	/ Rw	/ Rh	/ RL	/ W
B	229	/ 71	/ 166	/ -	/ 31	/ 4.0
D	27	/ 4	/ 23	/ -	/ -	/ 1.5
C	2	/ 16	/ 17	/ -	/ -	/ 1.5

Wind reactions based on MWFRS
B Min Brg Width Req = 1.5
D Min Brg Width Req = -
C Min Brg Width Req = -
Bearing B is a rigid surface.

Members not listed have forces less than 375#

Lumber
Top chord 2x4 SP M-31
Bot chord 2x4 SP M-31

Wind
Wind loads based on MWFRS with additional C&C member design.

#0 278

04/14/2017

****WARNING**** READ AND FOLLOW ALL NOTES ON THIS DRAWING!
****IMPORTANT**** FURNISH THIS DRAWING TO ALL CONTRACTORS INCLUDING THE INSTALLERS

Trusses require extreme care in fabricating, handling, shipping, installing and bracing. Refer to and follow the latest edition of BCSI (Building Component Safety Information, by TPI and SBCA) for safety practices prior to performing these functions. Installers shall provide temporary bracing per BCSI. Unless noted otherwise,top chord shall have properly attached structural sheathing and bottom chord shall have a properly attached rigid ceiling. Locations shown for permanent lateral restraint of webs shall have bracing installed per BCSI sections B3, B7, or B10, as applicable. Apply plates to each face of truss and position as shown above and on the Joint Details, unless noted otherwise. Refer to drawings 160A-Z for standard plate positions.

Alpine, a division of ITW Building Components Group Inc. shall not be responsible for any deviation from this drawing,any failure to build the truss in conformance with ANSI/TPI 1, or for handling, shipping, installation and bracing of trusses**A seal on this drawing or cover page listing this drawing, indicates acceptance of professional engineering responsibility solely for the design shown. The suitability and use of this drawing for any structure is the responsibility of the Building Designer per ANSI/TPI 1 Sec.2.**

For more information see this job's general notes page and these web sites: ALPINE: www.alpineitw.com; TPI: www.tpinst.org; SBCA: www.sbcindustry.com; ICC: www.iccsafe.org

ALPINE™ AN ITW COMPANY
2400 Lake Orange Dr.
Suite 150
Orlando FL, 32837

Job Number: 16-0982 HUBBART RESIDENCE **Truss Label:** J27	Ply: 1 Qty: 1	SEQN: 468535 / T39 JACK FROM: CDM	Cust: R215 JRef: 1VZZ2150001 DrwNo: 104.17.1306.56203 KM / DF 04/14/2017

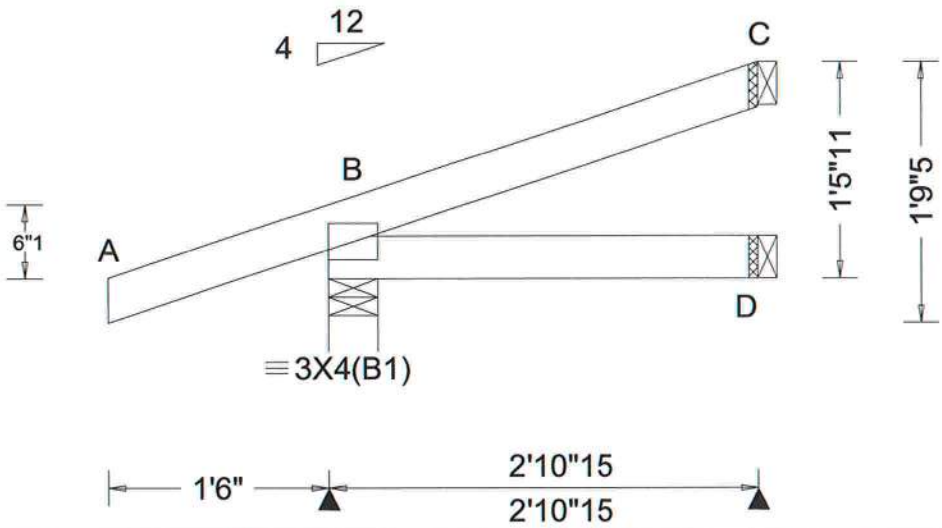

Loading Criteria (psf)
TCLL: 20.00
TCDL: 10.00
BCLL: 0.00
BCDL: 10.00
Des Ld: 40.00
NCBCLL: 10.00
Soffit: 2.00
Load Duration: 1.25
Spacing: 24.0 "

Wind Criteria
Wind Std: ASCE 7-10
Speed: 130 mph
Enclosure: Closed
Risk Category: II
EXP: C
Mean Height: 15.00 ft
TCDL: 5.0 psf
BCDL: 5.0 psf
MWFRS Parallel Dist: 0 to h/2
C&C Dist a: 3.00 ft
Loc. from endwall: not in 4.50 ft
GCpi: 0.18
Wind Duration: 1.60

Snow Criteria (Pg,Pf in PSF)
Pg: NA Ct: NA CAT: NA
Pf: NA Ce: NA
Lu: NA Cs: NA
Snow Duration: NA

Code / Misc Criteria
Bldg Code: FBC 2014 RES
TPI Std: 2007
Rep Factors Used: Yes
FT/RT:20(0)/10(0)
Plate Type(s):
WAVE

Defl/CSI Criteria

PP Deflection in	loc	L/defl	L/#
VERT(LL): NA			
VERT(TL): NA			
HORZ(LL): 0.001	D	-	-
HORZ(TL): 0.001	D	-	-

Creep Factor: 1.5
Max TC CSI: 0.067
Max BC CSI: 0.030
Max Web CSI: 0.000

VIEW Ver: 16.02.01B.0131.17

▲ Maximum Reactions (lbs)

Loc	R	/ U	/ Rw	/ Rh	/ RL	/ W
B	253	/ 60	/ 178	/ -	/ 42	/ 4.0
D	51	/ -	/ 37	/ -	/ -	/ 1.5
C	57	/ 21	/ 17	/ -	/ -	/ 1.5

Wind reactions based on MWFRS
B Min Brg Width Req = 1.5
D Min Brg Width Req = -
C Min Brg Width Req = -
Bearing B is a rigid surface.

Members not listed have forces less than 375#

Lumber

Top chord 2x4 SP M-31
Bot chord 2x4 SP M-31

Wind

Wind loads based on MWFRS with additional C&C member design.

04/14/2017

****WARNING**** READ AND FOLLOW ALL NOTES ON THIS DRAWING!
****IMPORTANT**** FURNISH THIS DRAWING TO ALL CONTRACTORS INCLUDING THE INSTALLERS

Trusses require extreme care in fabricating, handling, shipping, installing and bracing. Refer to and follow the latest edition of BCSI (Building Component Safety Information, by TPI and SBCA) for safety practices prior to performing these functions. Installers shall provide temporary bracing per BCSI. Unless noted otherwise,top chord shall have properly attached structural sheathing and bottom chord shall have a properly attached rigid ceiling. Locations shown for permanent lateral restraint of webs shall have bracing installed per BCSI sections B3, B7, or B10, as applicable. Apply plates to each face of truss and position as shown above and on the Joint Details, unless noted otherwise. Refer to drawings 160A-Z for standard plate positions.

Alpine, a division of ITW Building Components Group Inc. shall not be responsible for any deviation from this drawing,any failure to build the truss in conformance with ANSI/TPI 1, or for handling, shipping, installation and bracing of trusses**A seal on this drawing or cover page listing this drawing, indicates acceptance of professional engineering responsibility solely for the design shown. The suitability and use of this drawing for any structure is the responsibility of the Building Designer per ANSI/TPI 1 Sec.2.**

For more information see this job's general notes page and these web sites: ALPINE: www.alpineitw.com; TPI: www.tpinst.org; SBCA: www.sbcindustry.com; ICC: www.iccsafe.org

ALPINE AN ITW COMPANY
2400 Lake Orange Dr.
Suite 150
Orlando FL, 32837

Job Number: 16-0982 HUBBART RESIDENCE **Truss Label:** J28	Ply: 1 Qty: 1	SEQN: 468537 / T120 JACK FROM: CDM	Cust: R215 JRef: 1VZZ2150001 DrwNo: 104.17.1306.57200 KM / DF 04/14/2017

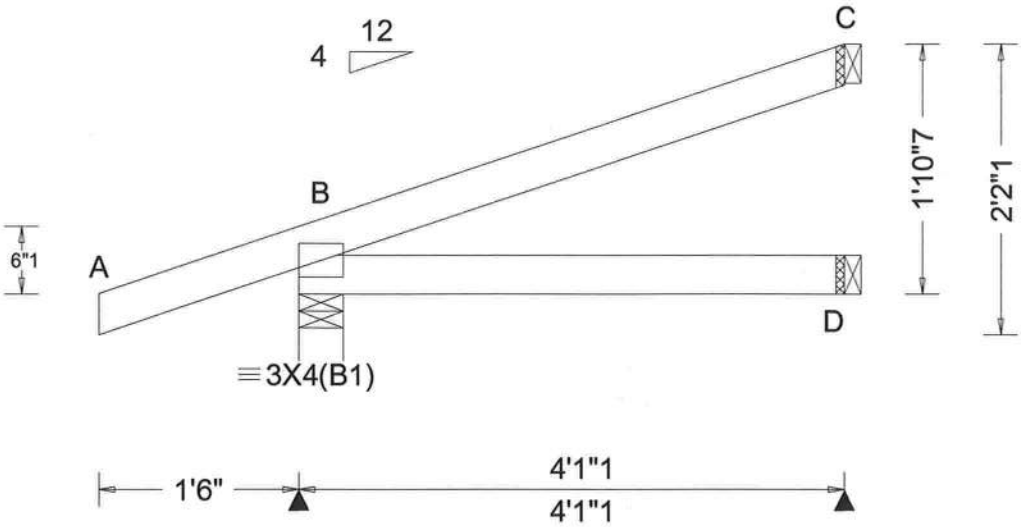

Loading Criteria (psf)
TCLL: 20.00
TCDL: 10.00
BCLL: 0.00
BCDL: 10.00
Des Ld: 40.00
NCBCLL: 10.00
Soffit: 2.00
Load Duration: 1.25
Spacing: 24.0 "

Wind Criteria
Wind Std: ASCE 7-10
Speed: 130 mph
Enclosure: Closed
Risk Category: II
EXP: C
Mean Height: 15.00 ft
TCDL: 5.0 psf
BCDL: 5.0 psf
MWFRS Parallel Dist: h/2 to h
C&C Dist a: 3.00 ft
Loc. from endwall: not in 9.00 ft
GCpi: 0.18
Wind Duration: 1.60

Snow Criteria (Pg,Pf in PSF)
Pg: NA Ct: NA CAT: NA
Pf: NA Ce: NA
Lu: NA Cs: NA
Snow Duration: NA

Code / Misc Criteria
Bldg Code: FBC 2014 RES
TPI Std: 2007
Rep Factors Used: Yes
FT/RT:20(0)/10(0)
Plate Type(s):
WAVE

Defl/CSI Criteria
PP Deflection in loc L/defl L/#
VERT(LL): NA
VERT(TL): NA
HORZ(LL): 0.001 D - -
HORZ(TL): 0.002 D - -
Creep Factor: 1.5
Max TC CSI: 0.073
Max BC CSI: 0.065
Max Web CSI: 0.000

VIEW Ver: 16.02.01B.0131.17

▲Maximum Reactions (lbs)

Loc	R	/ U	/ Rw	/ Rh	/ RL	/ W
B	292	/ 55	/ 201	/ -	/ 53	/ 4.0
D	74	/ -	/ 51	/ -	/ -	/ 1.5
C	99	/ 35	/ 38	/ -	/ -	/ 1.5

Wind reactions based on MWFRS
B Min Brg Width Req = 1.5
D Min Brg Width Req = -
C Min Brg Width Req = -
Bearing B is a rigid surface.

Members not listed have forces less than 375#

Lumber

Top chord 2x4 SP M-31
Bot chord 2x4 SP M-31

Wind

Wind loads based on MWFRS with additional C&C member design.

#0 278

04/14/2017

****WARNING**** READ AND FOLLOW ALL NOTES ON THIS DRAWING!
****IMPORTANT**** FURNISH THIS DRAWING TO ALL CONTRACTORS INCLUDING THE INSTALLERS

Trusses require extreme care in fabricating, handling, shipping, installing and bracing. Refer to and follow the latest edition of BCSI (Building Component Safety Information, by TPI and SBCA) for safety practices prior to performing these functions. Installers shall provide temporary bracing per BCSI. Unless noted otherwise,top chord shall have properly attached structural sheathing and bottom chord shall have a properly attached rigid ceiling. Locations shown for permanent lateral restraint of webs shall have bracing installed per BCSI sections B3, B7, or B10, as applicable. Apply plates to each face of truss and position as shown above and on the Joint Details, unless noted otherwise. Refer to drawings 160A-Z for standard plate positions.

Alpine, a division of ITW Building Components Group Inc. shall not be responsible for any deviation from this drawing,any failure to build the truss in conformance with ANSI/TPI 1, or for handling, shipping, installation and bracing of trusses**A seal on this drawing or cover page listing this drawing, indicates acceptance of professional engineering responsibility solely for the design shown. The suitability and use of this drawing for any structure is the responsibility of the Building Designer per ANSI/TPI 1 Sec.2.**

For more information see this job's general notes page and these web sites: ALPINE: www.alpineitw.com; TPI: www.tpinst.org; SBCA: www.sbcindustry.com; ICC: www.iccsafe.org

ALPINE™ AN ITW COMPANY
2400 Lake Orange Dr.
Suite 150
Orlando FL, 32837

Job Number: 16-0982 HUBBART RESIDENCE **Truss Label:** K01	Ply: 1 Qty: 1	SEQN: 468279 / T73 SPEC FROM: CDM	Cust: R215 JRef: 1VZZ2150001 DrwNo: 104.17.1307.03237 KM / DF 04/14/2017

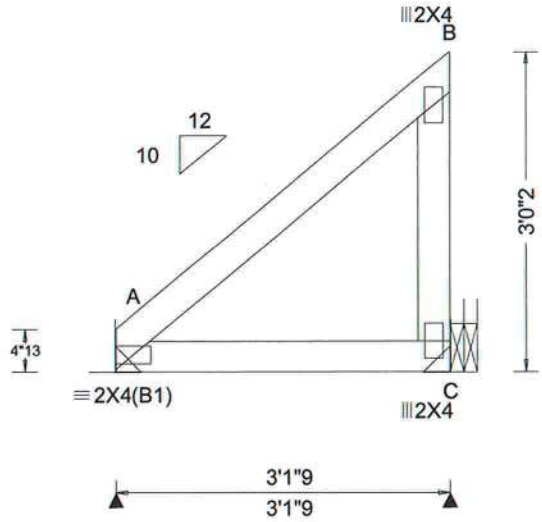

Loading Criteria (psf)	**Wind Criteria**	**Snow Criteria** (Pg,Pf in PSF)	**Defl/CSI Criteria**	**▲Maximum Reactions (lbs)**
TCLL: 20.00 TCDL: 10.00 BCLL: 0.00 BCDL: 10.00 Des Ld: 40.00 NCBCLL: 10.00 Soffit: 2.00 Load Duration: 1.25 Spacing: 24.0 "	Wind Std: ASCE 7-10 Speed: 130 mph Enclosure: Closed Risk Category: II EXP: C Mean Height: 15.00 ft TCDL: 5.0 psf BCDL: 5.0 psf MWFRS Parallel Dist: h to 2h C&C Dist a: 3.00 ft Loc. from endwall: not in 9.00 ft GCpi: 0.18 Wind Duration: 1.60	Pg: NA Ct: NA CAT: NA Pf: NA Ce: NA Lu: NA Cs: NA Snow Duration: NA **Code / Misc Criteria** Bldg Code: FBC 2014 RES TPI Std: 2007 Rep Factors Used: Yes FT/RT:20(0)/10(0) Plate Type(s): WAVE	PP Deflection in loc L/defl L/# VERT(LL): NA VERT(TL): NA HORZ(LL): 0.001 C - - HORZ(TL): 0.003 C - - Creep Factor: 1.5 Max TC CSI: 0.053 Max BC CSI: 0.039 Max Web CSI: 0.012 VIEW Ver: 16.02.01B.0131.17	Loc R / U / Rw / Rh / RL / W A 140 / - / 90 / - / 48 / - C 129 / 26 / 108 / - / - / - Wind reactions based on MWFRS A Min Brg Width Req = - C Min Brg Width Req = - Members not listed have forces less than 375#

Lumber

Top chord 2x4 SP M-31
Bot chord 2x4 SP M-31
Webs 2x4 SP M-31

Hangers / Ties

Recommended hanger connections are based on manufacturer tested capacities and calculations. Conditions may exist that require different connections than indicated. Refer to manufacturer publication for additional information.

Bearing at location x=0' ,y=10' uses the following support conditions:
Bearing A (0', 10') LUS26
Supporting Member: (2)2x6 SP M-31
(4) 0.148"x3" nails into supporting member,
(3) 0.148"x3" nails into supported member.
Bearing C (2'10"9, 10') LSU26
Supporting Member: (2)2x6 SP M-31
(6) 0.148"x3" nails into supporting member,
(5) 0.148"x1.5" nails into supported member.

Wind

Wind loads based on MWFRS with additional C&C member design.

Right end vertical not exposed to wind pressure.

DOUGLAS FLEMING
LICENSE
No. 66648
STATE OF
FLORIDA
PROFESSIONAL ENGINEER

#0 278

04/14/2017

****WARNING**** READ AND FOLLOW ALL NOTES ON THIS DRAWING!
****IMPORTANT**** FURNISH THIS DRAWING TO ALL CONTRACTORS INCLUDING THE INSTALLERS

Trusses require extreme care in fabricating, handling, shipping, installing and bracing. Refer to and follow the latest edition of BCSI (Building Component Safety Information, by TPI and SBCA) for safety practices prior to performing these functions. Installers shall provide temporary bracing per BCSI. Unless noted otherwise,top chord shall have properly attached structural sheathing and bottom chord shall have a properly attached rigid ceiling. Locations shown for permanent lateral restraint of webs shall have bracing installed per BCSI sections B3, B7, or B10, as applicable. Apply plates to each face of truss and position as shown above and on the Joint Details, unless noted otherwise. Refer to drawings 160A-Z for standard plate positions.

Alpine, a division of ITW Building Components Group Inc. shall not be responsible for any deviation from this drawing,any failure to build the truss in conformance with ANSI/TPI 1, or for handling, shipping, installation and bracing of trusses**A seal on this drawing or cover page listing this drawing, indicates acceptance of professional engineering responsibility solely for the design shown. The suitability and use of this drawing for any structure is the responsibility of the Building Designer per ANSI/TPI 1 Sec.2.**

For more information see this job's general notes page and these web sites: ALPINE: www.alpineitw.com; TPI: www.tpinst.org; SBCA: www.sbcindustry.com; ICC: www.iccsafe.org

ALPINE
AN ITW COMPANY
2400 Lake Orange Dr.
Suite 150
Orlando FL, 32837

Job Number: 16-0982 HUBBART RESIDENCE **Truss Label:** K02	Ply: 1 Qty: 1	SEQN: 468278 / T70 MONO FROM: CDM	Cust: R215 JRef: 1VZZ2150001 DrwNo: 104.17.1307.04297 KM / DF 04/14/2017

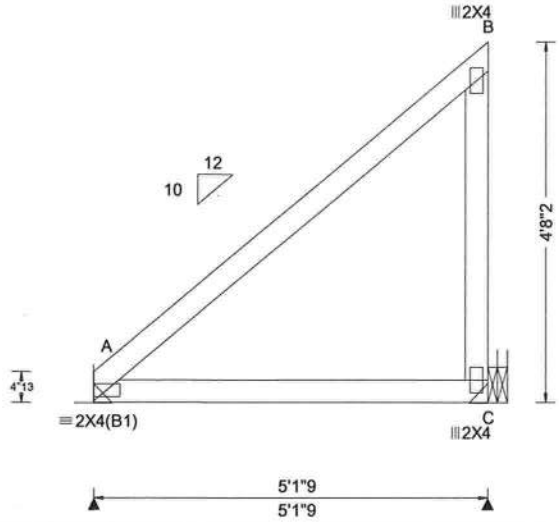

Loading Criteria (psf)
TCLL: 20.00
TCDL: 10.00
BCLL: 0.00
BCDL: 10.00
Des Ld: 40.00
NCBCLL: 10.00
Soffit: 2.00
Load Duration: 1.25
Spacing: 24.0 "

Wind Criteria
Wind Std: ASCE 7-10
Speed: 130 mph
Enclosure: Closed
Risk Category: II
EXP: C
Mean Height: 15.00 ft
TCDL: 5.0 psf
BCDL: 5.0 psf
MWFRS Parallel Dist: h to 2h
C&C Dist a: 3.00 ft
Loc. from endwall: not in 9.00 ft
GCpi: 0.18
Wind Duration: 1.60

Snow Criteria (Pg,Pf in PSF)
Pg: NA Ct: NA CAT: NA
Pf: NA Ce: NA
Lu: NA Cs: NA
Snow Duration: NA

Code / Misc Criteria
Bldg Code: FBC 2014 RES
TPI Std: 2007
Rep Factors Used: Yes
FT/RT:20(0)/10(0)
Plate Type(s):
WAVE

Defl/CSI Criteria

PP Deflection in	loc	L/defl	L/#
VERT(LL): NA			
VERT(TL): NA			
HORZ(LL): 0.005	C	-	-
HORZ(TL): 0.013	C	-	-

Creep Factor: 1.5
Max TC CSI: 0.167
Max BC CSI: 0.116
Max Web CSI: 0.029

VIEW Ver: 16.02.01B.0131.17

▲Maximum Reactions (lbs)

Loc	R	/ U	/ Rw	/ Rh	/ RL	/ W
A	226	/ -	/ 146	/ -	/ 80	/ -
C	215	/ 42	/ 180	/ -	/ -	/ -

Wind reactions based on MWFRS
A Min Brg Width Req = -
C Min Brg Width Req = -

Members not listed have forces less than 375#

Lumber

Top chord 2x4 SP M-31
Bot chord 2x4 SP M-31
Webs 2x4 SP M-31

Hangers / Ties

Recommended hanger connections are based on manufacturer tested capacities and calculations. Conditions may exist that require different connections than indicated. Refer to manufacturer publication for additional information.

Bearing at location x=0' uses the following support conditions:
Bearing A (0', 10') LUS26
Supporting Member: (2)2x6 SP M-31
(4) 0.148"x3" nails into supporting member,
(3) 0.148"x3" nails into supported member.
Bearing C (4'10"9, 10') LSU26
Supporting Member: (2)2x6 SP M-31
(6) 0.148"x3" nails into supporting member,
(5) 0.148"x1.5" nails into supported member.

Wind

Wind loads based on MWFRS with additional C&C member design.

Right end vertical not exposed to wind pressure.

DOUGLAS FLEMING
LICENSE
No. 66648
STATE OF
FLORIDA
PROFESSIONAL ENGINEER

#0 278

04/14/2017

****WARNING**** READ AND FOLLOW ALL NOTES ON THIS DRAWING!
****IMPORTANT**** FURNISH THIS DRAWING TO ALL CONTRACTORS INCLUDING THE INSTALLERS

Trusses require extreme care in fabricating, handling, shipping, installing and bracing. Refer to and follow the latest edition of BCSI (Building Component Safety Information, by TPI and SBCA) for safety practices prior to performing these functions. Installers shall provide temporary bracing per BCSI. Unless noted otherwise,top chord shall have properly attached structural sheathing and bottom chord shall have a properly attached rigid ceiling. Locations shown for permanent lateral restraint of webs shall have bracing installed per BCSI sections B3, B7, or B10, as applicable. Apply plates to each face of truss and position as shown above and on the Joint Details, unless noted otherwise. Refer to drawings 160A-Z for standard plate positions.

Alpine, a division of ITW Building Components Group Inc. shall not be responsible for any deviation from this drawing,any failure to build the truss in conformance with ANSI/TPI 1, or for handling, shipping, installation and bracing of trusses**A seal on this drawing or cover page listing this drawing, indicates acceptance of professional engineering responsibility solely for the design shown. The suitability and use of this drawing for any structure is the responsibility of the Building Designer per ANSI/TPI 1 Sec.2.**

For more information see this job's general notes page and these web sites: ALPINE: www.alpineitw.com; TPI: www.tpinst.org; SBCA: www.sbcindustry.com; ICC: www.iccsafe.org

ALPINE
AN ITW COMPANY
2400 Lake Orange Dr.
Suite 150
Orlando FL, 32837

Job Number: 16-0982 HUBBART RESIDENCE **Truss Label:** K03	Ply: 1 Qty: 1	SEQN: 468277 / T4 MONO FROM: CDM	Cust: R215 JRef: 1VZZ2150001 DrwNo: 104.17.1307.09003 KM / DF 04/14/2017

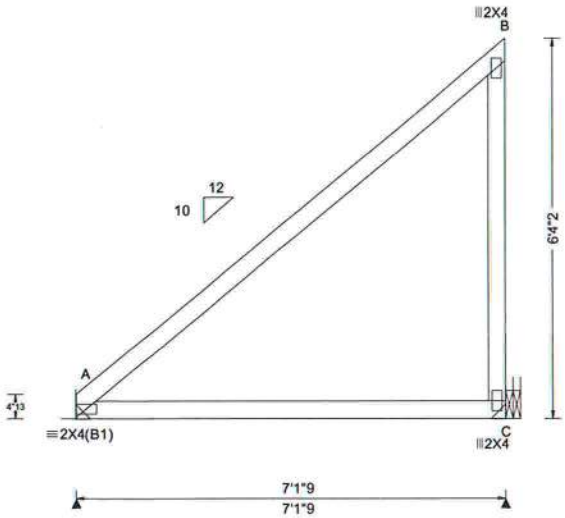

Loading Criteria (psf)
TCLL: 20.00
TCDL: 10.00
BCLL: 0.00
BCDL: 10.00
Des Ld: 40.00
NCBCLL: 10.00
Soffit: 2.00
Load Duration: 1.25
Spacing: 24.0 "

Wind Criteria
Wind Std: ASCE 7-10
Speed: 130 mph
Enclosure: Closed
Risk Category: II
EXP: C
Mean Height: 15.00 ft
TCDL: 5.0 psf
BCDL: 5.0 psf
MWFRS Parallel Dist: h to 2h
C&C Dist a: 3.00 ft
Loc. from endwall: not in 9.00 ft
GCpi: 0.18
Wind Duration: 1.60

Snow Criteria (Pg,Pf in PSF)
Pg: NA Ct: NA CAT: NA
Pf: NA Ce: NA
Lu: NA Cs: NA
Snow Duration: NA

Code / Misc Criteria
Bldg Code: FBC 2014 RES
TPI Std: 2007
Rep Factors Used: Yes
FT/RT:20(0)/10(0)
Plate Type(s):
WAVE

Defl/CSI Criteria

PP Deflection in	loc	L/defl	L/#
VERT(LL): NA			
VERT(TL): NA			
HORZ(LL): 0.012	C	-	-
HORZ(TL): 0.034	C	-	-

Creep Factor: 1.5
Max TC CSI: 0.342
Max BC CSI: 0.228
Max Web CSI: 0.076

VIEW Ver: 16.02.01B.0131.17

▲ Maximum Reactions (lbs)

Loc	R	/ U	/ Rw	/ Rh	/ RL	/ W
A	312	/ -	/ 202	/ -	/ 112	/ -
C	301	/ 58	/ 252	/ -	/ -	/ -

Wind reactions based on MWFRS
A Min Brg Width Req = -
C Min Brg Width Req = -

Members not listed have forces less than 375#

Lumber

Top chord 2x4 SP M-31
Bot chord 2x4 SP M-31
Webs 2x4 SP M-31

Hangers / Ties

Recommended connection based on manufacturer tested capacities and calculations. Conditions may exist that require different connections than indicated. Refer to manufacturer publication for additional information. Additional connection required to evenly distribute hanger reaction throughout all plies of supporting girder.

Bearing at location x=0' uses the following support conditions:
Bearing A (0', 10') LUS26
Supporting Member: (2)2x6 SP M-31
(4) 0.148"x3" nails into supporting member,
(3) 0.148"x3" nails into supported member.
Bearing C (6'10"9, 10') LSU26
Supporting Member: (2)2x6 SP M-31
(6) SD9112, 0.131"x1.5" into supporting member,
(5) SD9112, 0.131"x1.5" into supported member.

Wind

Wind loads based on MWFRS with additional C&C member design.

Right end vertical not exposed to wind pressure.

DOUGLAS FLEMING
LICENSE
No. 66648
STATE OF
FLORIDA
PROFESSIONAL ENGINEER

#0 278

04/14/2017

****WARNING**** READ AND FOLLOW ALL NOTES ON THIS DRAWING!
****IMPORTANT**** FURNISH THIS DRAWING TO ALL CONTRACTORS INCLUDING THE INSTALLERS

Trusses require extreme care in fabricating, handling, shipping, installing and bracing. Refer to and follow the latest edition of BCSI (Building Component Safety Information, by TPI and SBCA) for safety practices prior to performing these functions. Installers shall provide temporary bracing per BCSI. Unless noted otherwise,top chord shall have properly attached structural sheathing and bottom chord shall have a properly attached rigid ceiling. Locations shown for permanent lateral restraint of webs shall have bracing installed per BCSI sections B3, B7, or B10, as applicable. Apply plates to each face of truss and position as shown above and on the Joint Details, unless noted otherwise. Refer to drawings 160A-Z for standard plate positions.

Alpine, a division of ITW Building Components Group Inc. shall not be responsible for any deviation from this drawing,any failure to build the truss in conformance with ANSI/TPI 1, or for handling, shipping, installation and bracing of trusses**A seal on this drawing or cover page listing this drawing, indicates acceptance of professional engineering responsibility solely for the design shown. The suitability and use of this drawing for any structure is the responsibility of the Building Designer per ANSI/TPI 1 Sec.2.**

For more information see this job's general notes page and these web sites: ALPINE: www.alpineitw.com; TPI: www.tpinst.org; SBCA: www.sbcindustry.com; ICC: www.iccsafe.org

ALPINE
AN ITW COMPANY
2400 Lake Orange Dr.
Suite 150
Orlando FL, 32837

Job Number: 16-0982 HUBBART RESIDENCE **Truss Label:** K04	Ply: 1 Qty: 1	SEQN: 468280 / T77 MONO FROM: CDM	Cust: R215 JRef: 1VZZ2150001 DrwNo: 104.17.1307.10300 KM / DF 04/14/2017

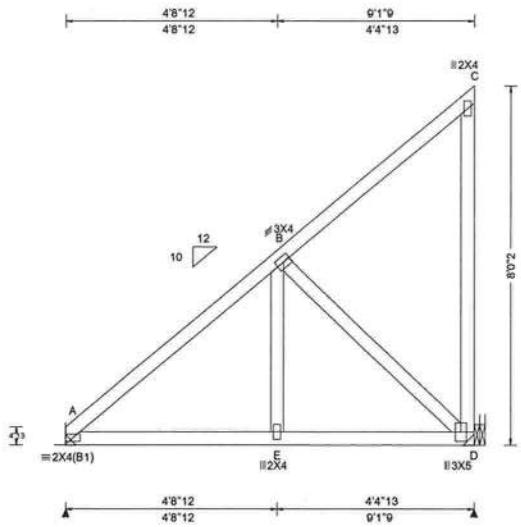

Loading Criteria (psf)
TCLL: 20.00
TCDL: 10.00
BCLL: 0.00
BCDL: 10.00
Des Ld: 40.00
NCBCLL: 10.00
Soffit: 2.00
Load Duration: 1.25
Spacing: 24.0 "

Wind Criteria
Wind Std: ASE 7-10
Speed: 130 mph
Enclosure: Closed
Risk Category: II
EXP: C
Mean Height: 15.00 ft
TCDL: 5.0 psf
BCDL: 5.0 psf
MWFRS Parallel Dist: h to 2h
C&C Dist a: 3.00 ft
Loc. from endwall: not in 9.00 ft
GCpi: 0.18
Wind Duration: 1.60

Snow Criteria (Pg,Pf in PSF)
Pg: NA Ct: NA CAT: NA
Pf: NA Ce: NA
Lu: NA Cs: NA
Snow Duration: NA

Code / Misc Criteria
Bldg Code: FBC 2014 RES
TPI Std: 2007
Rep Factors Used: Yes
FT/RT:20(0)/10(0)
Plate Type(s):
WAVE

Defl/CSI Criteria

PP Deflection in	loc	L/defl	L/#
VERT(LL): 0.002	E	999	240
VERT(TL): 0.006	E	999	180
HORZ(LL): -0.001	C	-	-
HORZ(TL): 0.004	E	-	-

Creep Factor: 1.5
Max TC CSI: 0.141
Max BC CSI: 0.106
Max Web CSI: 0.122

VIEW Ver: 16.02.01B.0131.17

▲ Maximum Reactions (lbs)

Loc	R	/ U	/ Rw	/ Rh	/ RL	/ W
A	398	/ -	/ 258	/ -	/ 144	/ -
D	387	/ 74	/ 323	/ -	/ -	/ -

Wind reactions based on MWFRS
A Min Brg Width Req = -
D Min Brg Width Req = -

Members not listed have forces less than 375#
Maximum Top Chord Forces Per Ply (lbs)

Chords	Tens.	Comp.
A - B	0	-426

Lumber
Top chord 2x4 SP M-31
Bot chord 2x4 SP M-31
Webs 2x4 SP M-31

Hangers / Ties
Recommended connection based on manufacturer tested capacities and calculations. Conditions may exist that require different connections than indicated. Refer to manufacturer publication for additional information. Additional connection required to evenly distribute hanger reaction throughout all plies of supporting girder.

Bearing at location x=0' uses the following support conditions:
Bearing A (0', 10') LUS26
Supporting Member: (2)2x6 SP M-31
(4) 0.148"x3" nails into supporting member,
(3) 0.148"x3" nails into supported member.
Bearing D (8'10"9, 10') LSU26
Supporting Member: (2)2x6 SP M-31
(6) SD9112, 0.131"x1.5" into supporting member,
(5) SD9112, 0.131"x1.5" into supported member.

Wind
Wind loads based on MWFRS with additional C&C member design.
Right end vertical not exposed to wind pressure.

DOUGLAS FLEMING
LICENSE
No. 66648
STATE OF
FLORIDA
PROFESSIONAL ENGINEER
#0 278
04/14/2017

****WARNING**** READ AND FOLLOW ALL NOTES ON THIS DRAWING!
****IMPORTANT**** FURNISH THIS DRAWING TO ALL CONTRACTORS INCLUDING THE INSTALLERS

Trusses require extreme care in fabricating, handling, shipping, installing and bracing. Refer to and follow the latest edition of BCSI (Building Component Safety Information, by TPI and SBCA) for safety practices prior to performing these functions. Installers shall provide temporary bracing per BCSI. Unless noted otherwise,top chord shall have properly attached structural sheathing and bottom chord shall have a properly attached rigid ceiling. Locations shown for permanent lateral restraint of webs shall have bracing installed per BCSI sections B3, B7, or B10, as applicable. Apply plates to each face of truss and position as shown above and on the Joint Details, unless noted otherwise. Refer to drawings 160A-Z for standard plate positions.

Alpine, a division of ITW Building Components Group Inc. shall not be responsible for any deviation from this drawing,any failure to build the truss in conformance with ANSI/TPI 1, or for handling, shipping, installation and bracing of trusses**A seal on this drawing or cover page listing this drawing, indicates acceptance of professional engineering responsibility solely for the design shown. The suitability and use of this drawing for any structure is the responsibility of the Building Designer per ANSI/TPI 1 Sec.2.**

For more information see this job's general notes page and these web sites: ALPINE: www.alpineitw.com; TPI: www.tpinst.org; SBCA: www.sbcindustry.com; ICC: www.iccsafe.org

ALPINE
AN ITW COMPANY
2400 Lake Orange Dr.
Suite 150
Orlando FL, 32837

Job Number: 16-0982 HUBBART RESIDENCE **Truss Label:** K05	Ply: 1 Qty: 1	SEQN: 468276 / T72 MONO FROM: CDM	Cust: R215 JRef: 1VZZ2150001 DrwNo: 104.17.1307.11603 KM / DF 04/14/2017

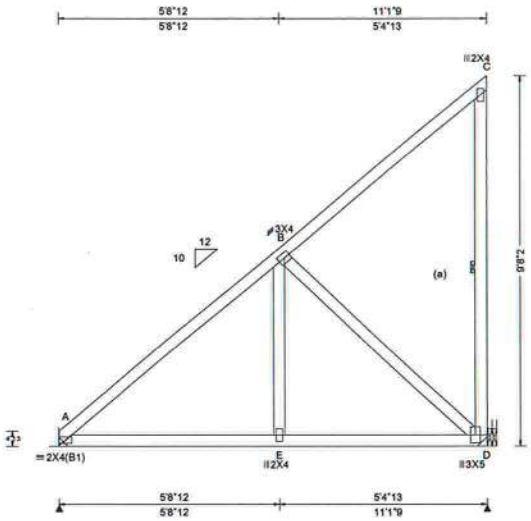

Loading Criteria (psf)
TCLL: 20.00
TCDL: 10.00
BCLL: 0.00
BCDL: 10.00
Des Ld: 40.00
NCBCLL: 10.00
Soffit: 2.00
Load Duration: 1.25
Spacing: 24.0 "

Wind Criteria
Wind Std: ASCE 7-10
Speed: 130 mph
Enclosure: Closed
Risk Category: II
EXP: C
Mean Height: 15.04 ft
TCDL: 5.0 psf
BCDL: 5.0 psf
MWFRS Parallel Dist: > 2h
C&C Dist a: 3.00 ft
Loc. from endwall: not in 9.00 ft
GCpi: 0.18
Wind Duration: 1.60

Snow Criteria (Pg,Pf in PSF)
Pg: NA Ct: NA CAT: NA
Pf: NA Ce: NA
Lu: NA Cs: NA
Snow Duration: NA

Code / Misc Criteria
Bldg Code: FBC 2014 RES
TPI Std: 2007
Rep Factors Used: Yes
FT/RT:20(0)/10(0)
Plate Type(s):
WAVE

Defl/CSI Criteria

PP Deflection in	loc	L/defl	L/#
VERT(LL): 0.003	E	999	240
VERT(TL): 0.008	E	999	180
HORZ(LL): 0.003	E	-	-
HORZ(TL): 0.007	E	-	-

Creep Factor: 1.5
Max TC CSI: 0.221
Max BC CSI: 0.157
Max Web CSI: 0.225

VIEW Ver: 16.02.01B.0131.17

▲ Maximum Reactions (lbs)

Loc	R	/ U	/ Rw	/ Rh	/ RL	/ W
A	484	/ -	/ 314	/ -	/ 176	/ -
D	473	/ 91	/ 395	/ -	/ -	/ -

Wind reactions based on MWFRS
A Min Brg Width Req = -
D Min Brg Width Req = -

Members not listed have forces less than 375#

Maximum Top Chord Forces Per Ply (lbs)

Chords	Tens.	Comp.
A - B	0	-527

Maximum Web Forces Per Ply (lbs)

Webs	Tens.	Comp.
B - D	223	-444

Lumber
Top chord 2x4 SP M-31
Bot chord 2x4 SP M-31
Webs 2x4 SP M-31

Bracing
(a) Continuous lateral restraint equally spaced on member.

Hangers / Ties
Recommended connection based on manufacturer tested capacities and calculations. Conditions may exist that require different connections than indicated. Refer to manufacturer publication for additional information. Additional connection required to evenly distribute hanger reaction throughout all plies of supporting girder.

Bearing at location x=0' uses the following support conditions:
Bearing A (0', 10') LUS26
Supporting Member: (2)2x6 SP M-31
(4) 0.148"x3" nails into supporting member,
(3) 0.148"x3" nails into supported member.
Bearing D (10'10"9, 10') LSU26
Supporting Member: (2)2x6 SP M-31
(6) SD9112, 0.131"x1.5" into supporting member,
(5) SD9112, 0.131"x1.5" into supported member.

Wind
Wind loads based on MWFRS with additional C&C member design.
Right end vertical not exposed to wind pressure.

DOUGLAS FLEMING
LICENSE
No. 66648
STATE OF
FLORIDA
PROFESSIONAL ENGINEER
#0 278

04/14/2017

****WARNING**** READ AND FOLLOW ALL NOTES ON THIS DRAWING!
****IMPORTANT**** FURNISH THIS DRAWING TO ALL CONTRACTORS INCLUDING THE INSTALLERS

Trusses require extreme care in fabricating, handling, shipping, installing and bracing. Refer to and follow the latest edition of BCSI (Building Component Safety Information, by TPI and SBCA) for safety practices prior to performing these functions. Installers shall provide temporary bracing per BCSI. Unless noted otherwise,top chord shall have properly attached structural sheathing and bottom chord shall have a properly attached rigid ceiling. Locations shown for permanent lateral restraint of webs shall have bracing installed per BCSI sections B3, B7, or B10, as applicable. Apply plates to each face of truss and position as shown above and on the Joint Details, unless noted otherwise. Refer to drawings 160A-Z for standard plate positions.

Alpine, a division of ITW Building Components Group Inc. shall not be responsible for any deviation from this drawing,any failure to build the truss in conformance with ANSI/TPI 1, or for handling, shipping, installation and bracing of trusses**A seal on this drawing or cover page listing this drawing, indicates acceptance of professional engineering responsibility solely for the design shown. The suitability and use of this drawing for any structure is the responsibility of the Building Designer per ANSI/TPI 1 Sec.2.**

For more information see this job's general notes page and these web sites: ALPINE: www.alpineitw.com; TPI: www.tpinst.org; SBCA: www.sbcindustry.com; ICC: www.iccsafe.org

ALPINE
AN ITW COMPANY
2400 Lake Orange Dr.
Suite 150
Orlando FL, 32837

Job Number: 16-0982 HUBBART RESIDENCE **Truss Label:** K06	Ply: 1 Qty: 1	SEQN: 468275 / T44 MONO FROM: CDM	Cust: R215 JRef: 1VZZ2150001 DrwNo: 104.17.1307.12780 KM / DF 04/14/2017

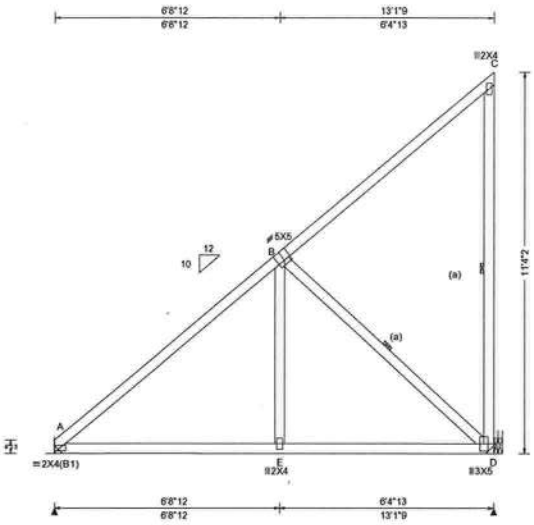

Loading Criteria (psf)

TCLL:	20.00
TCDL:	10.00
BCLL:	0.00
BCDL:	10.00
Des Ld:	40.00
NCBCLL:	10.00
Soffit:	2.00

Load Duration: 1.25
Spacing: 24.0 "

Wind Criteria
Wind Std: ASCE 7-10
Speed: 130 mph
Enclosure: Closed
Risk Category: II
EXP: C
Mean Height: 15.87 ft
TCDL: 5.0 psf
BCDL: 5.0 psf
MWFRS Parallel Dist: > 2h
C&C Dist a: 3.00 ft
Loc. from endwall: not in 9.00 ft
GCpi: 0.18
Wind Duration: 1.60

Snow Criteria (Pg,Pf in PSF)
Pg: NA Ct: NA CAT: NA
Pf: NA Ce: NA
Lu: NA Cs: NA
Snow Duration: NA

Code / Misc Criteria
Bldg Code: FBC 2014 RES
TPI Std: 2007
Rep Factors Used: Yes
FT/RT:20(0)/10(0)
Plate Type(s):
WAVE

Defl/CSI Criteria

PP Deflection in	loc	L/defl	L/#
VERT(LL): 0.004	E	999	240
VERT(TL): 0.011	E	999	180
HORZ(LL): 0.004	E	-	-
HORZ(TL): 0.012	E	-	-

Creep Factor: 1.5
Max TC CSI: 0.311
Max BC CSI: 0.218
Max Web CSI: 0.102

VIEW Ver: 16.02.01B.0131.17

▲ Maximum Reactions (lbs)

Loc	R	/ U	/ Rw	/ Rh	/ RL	/ W
A	570	/ -	/ 371	/ -	/ 210	/ -
D	559	/ 110	/ 466	/ -	/ -	/ -

Wind reactions based on MWFRS
A Min Brg Width Req = -
D Min Brg Width Req = -

Members not listed have forces less than 375#

Maximum Top Chord Forces Per Ply (lbs)

Chords	Tens.	Comp.
A - B	0	- 628

Maximum Bot Chord Forces Per Ply (lbs)

Chords	Tens.	Comp.	Chords	Tens.	Comp.
A - E	393	- 187	E - D	391	- 187

Maximum Web Forces Per Ply (lbs)

Webs	Tens.	Comp.
B - D	252	- 526

Lumber
Top chord 2x4 SP M-31
Bot chord 2x4 SP M-31
Webs 2x4 SP M-31

Bracing
(a) Continuous lateral restraint equally spaced on member.

Hangers / Ties
Recommended connection based on manufacturer tested capacities and calculations. Conditions may exist that require different connections than indicated. Refer to manufacturer publication for additional information. Additional connection required to evenly distribute hanger reaction throughout all plies of supporting girder.

Bearing at location x=0' uses the following support conditions:
Bearing A (0', 10') LUS26
Supporting Member: (2)2x6 SP M-31
(4) 0.148"x3" nails into supporting member,
(3) 0.148"x3" nails into supported member.
Bearing D (12'10"9, 10') LSU26
Supporting Member: (2)2x6 SP M-31
(6) SD9112, 0.131"x1.5" into supporting member,
(5) SD9112, 0.131"x1.5" into supported member.

Wind
Wind loads based on MWFRS with additional C&C member design.
Right end vertical not exposed to wind pressure.

DOUGLAS FLEMING
LICENSE
No. 66648
STATE OF
FLORIDA
PROFESSIONAL ENGINEER
#0 278

04/14/2017

****WARNING**** READ AND FOLLOW ALL NOTES ON THIS DRAWING!
****IMPORTANT**** FURNISH THIS DRAWING TO ALL CONTRACTORS INCLUDING THE INSTALLERS

Trusses require extreme care in fabricating, handling, shipping, installing and bracing. Refer to and follow the latest edition of BCSI (Building Component Safety Information, by TPI and SBCA) for safety practices prior to performing these functions. Installers shall provide temporary bracing per BCSI. Unless noted otherwise,top chord shall have properly attached structural sheathing and bottom chord shall have a properly attached rigid ceiling. Locations shown for permanent lateral restraint of webs shall have bracing installed per BCSI sections B3, B7, or B10, as applicable. Apply plates to each face of truss and position as shown above and on the Joint Details, unless noted otherwise. Refer to drawings 160A-Z for standard plate positions.

Alpine, a division of ITW Building Components Group Inc. shall not be responsible for any deviation from this drawing,any failure to build the truss in conformance with ANSI/TPI 1, or for handling, shipping, installation and bracing of trusses**A seal on this drawing or cover page listing this drawing, indicates acceptance of professional engineering responsibility solely for the design shown. The suitability and use of this drawing for any structure is the responsibility of the Building Designer per ANSI/TPI 1 Sec.2.**

For more information see this job's general notes page and these web sites: ALPINE: www.alpineitw.com; TPI: www.tpinst.org; SBCA: www.sbcindustry.com; ICC: www.iccsafe.org

ALPINE™
AN ITW COMPANY
2400 Lake Orange Dr.
Suite 150
Orlando FL, 32837

Job Number: 16-0982 HUBBART RESIDENCE **Truss Label:** K07	Ply: 1 Qty: 1	SEQN: 467757 / T69 MONO FROM: CDM	Cust: R215 JRef: 1VZZ2150001 DrwNo: 104.17.1307.13913 KM / DF 04/14/2017

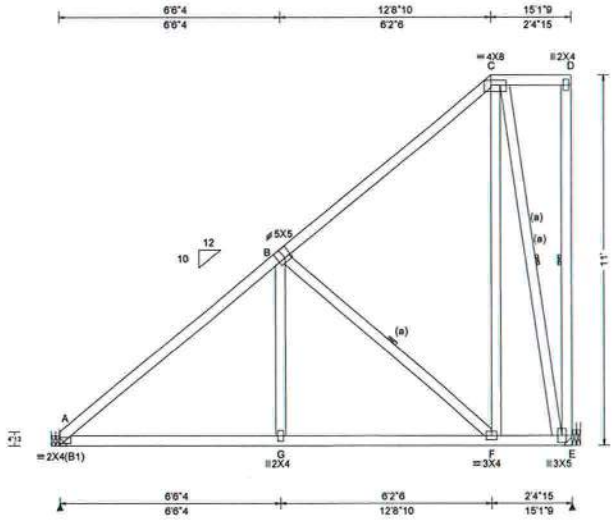

Loading Criteria (psf)

TCLL:	20.00
TCDL:	10.00
BCLL:	0.00
BCDL:	10.00
Des Ld:	40.00
NCBCLL:	10.00
Soffit:	2.00

Load Duration: 1.25
Spacing: 24.0 "

Wind Criteria
Wind Std: ASCE 7-10
Speed: 130 mph
Enclosure: Closed
Risk Category: II
EXP: C
Mean Height: 15.70 ft
TCDL: 5.0 psf
BCDL: 5.0 psf
MWFRS Parallel Dist: h to 2h
C&C Dist a: 3.00 ft
Loc. from endwall: not in 9.00 ft
GCpi: 0.18
Wind Duration: 1.60

Snow Criteria (Pg,Pf in PSF)
Pg: NA Ct: NA CAT: NA
Pf: NA Ce: NA
Lu: NA Cs: NA
Snow Duration: NA

Code / Misc Criteria
Bldg Code: FBC 2014 RES
TPI Std: 2007
Rep Factors Used: Yes
FT/RT:20(0)/10(0)
Plate Type(s):
WAVE

Defl/CSI Criteria

PP Deflection in	loc	L/defl	L/#
VERT(LL): 0.008	G	999	240
VERT(TL): 0.023	G	999	180
HORZ(LL): 0.005	B	-	-
HORZ(TL): 0.013	B	-	-

Creep Factor: 1.5
Max TC CSI: 0.220
Max BC CSI: 0.192
Max Web CSI: 0.178

VIEW Ver: 16.02.01B.0131.17

▲ Maximum Reactions (lbs)

Loc	R	/ U	/ Rw	/ Rh	/ RL	/ W
A	656	/ -	/ 440	/ -	/ 203	/ -
E	645	/ 125	/ 470	/ -	/ -	/ -

Wind reactions based on MWFRS
A Min Brg Width Req = -
E Min Brg Width Req = -

Members not listed have forces less than 375#

Maximum Top Chord Forces Per Ply (lbs)

Chords	Tens.	Comp.
A - B	0	-762

Maximum Bot Chord Forces Per Ply (lbs)

Chords	Tens.	Comp.	Chords	Tens.	Comp.
A - G	497	-231	G - F	496	-231

Maximum Web Forces Per Ply (lbs)

Webs	Tens.	Comp.	Webs	Tens.	Comp.
B - F	236	-500	C - E	256	-568
C - F	440	-134			

Lumber
Top chord 2x4 SP M-31
Bot chord 2x4 SP M-31
Webs 2x4 SP M-31

Bracing
(a) Continuous lateral restraint equally spaced on member.

Hangers / Ties
Recommended connection based on manufacturer tested capacities and calculations. Conditions may exist that require different connections than indicated. Refer to manufacturer publication for additional information. Additional connection required to evenly distribute hanger reaction throughout all plies of supporting girder.

Bearing at location x=0' uses the following support conditions:
Bearing A (0', 10') LUS26
Supporting Member: (2)2x6 SP M-31
(4) 0.148"x3" nails into supporting member,
(3) 0.148"x3" nails into supported member.
Bearing E (14'10"9, 10') LSU26
Supporting Member: (2)2x6 SP M-31
(6) SD9112, 0.131"x1.5" into supporting member,
(5) SD9112, 0.131"x1.5" into supported member.

Purlins
In lieu of structural panels use purlins to brace all flat TC @ 24" oc.

Wind
Wind loads based on MWFRS with additional C&C member design.
Right end vertical not exposed to wind pressure.

DOUGLAS FLEMING
LICENSE
No. 66648
STATE OF
FLORIDA
PROFESSIONAL ENGINEER
#0 278

04/14/2017

****WARNING**** READ AND FOLLOW ALL NOTES ON THIS DRAWING!
****IMPORTANT**** FURNISH THIS DRAWING TO ALL CONTRACTORS INCLUDING THE INSTALLERS

Trusses require extreme care in fabricating, handling, shipping, installing and bracing. Refer to and follow the latest edition of BCSI (Building Component Safety Information, by TPI and SBCA) for safety practices prior to performing these functions. Installers shall provide temporary bracing per BCSI. Unless noted otherwise,top chord shall have properly attached structural sheathing and bottom chord shall have a properly attached rigid ceiling. Locations shown for permanent lateral restraint of webs shall have bracing installed per BCSI sections B3, B7, or B10, as applicable. Apply plates to each face of truss and position as shown above and on the Joint Details, unless noted otherwise. Refer to drawings 160A-Z for standard plate positions.

Alpine, a division of ITW Building Components Group Inc. shall not be responsible for any deviation from this drawing,any failure to build the truss in conformance with ANSI/TPI 1, or for handling, shipping, installation and bracing of trusses**A seal on this drawing or cover page listing this drawing, indicates acceptance of professional engineering responsibility solely for the design shown. The suitability and use of this drawing for any structure is the responsibility of the Building Designer per ANSI/TPI 1 Sec.2.**

For more information see this job's general notes page and these web sites: ALPINE: www.alpineitw.com; TPI: www.tpinst.org; SBCA: www.sbcindustry.com; ICC: www.iccsafe.org

ALPINE
AN ITW COMPANY
2400 Lake Orange Dr.
Suite 150
Orlando FL, 32837

Job Number: 16-0982 HUBBART RESIDENCE **Truss Label:** L01	Ply: 1 Qty: 1	SEQN: 468355 / T21 GABL FROM: CDM	Cust: R215 JRef: 1VZZ2150001 DrwNo: 104.17.1307.14997 KM / DF 04/14/2017

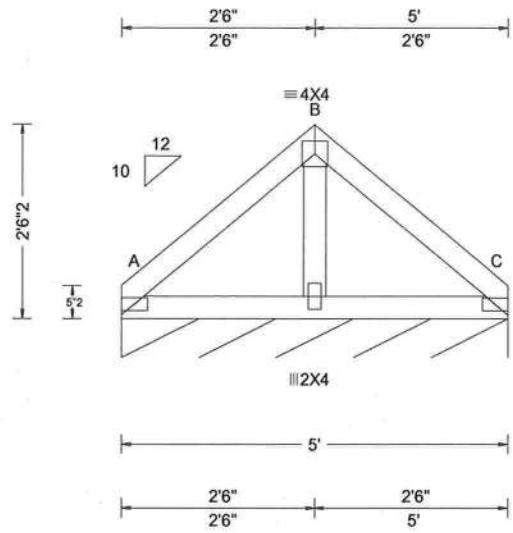

Loading Criteria (psf)	**Wind Criteria**	**Snow Criteria** (Pg,Pf in PSF)	**Defl/CSI Criteria**	**▲Maximum Reactions (lbs), or *=PLF**
TCLL: 20.00 TCDL: 10.00 BCLL: 0.00 BCDL: 10.00 Des Ld: 40.00 NCBCLL: 10.00 Soffit: 2.00 Load Duration: 1.25 Spacing: 24.0 "	Wind Std: ASCE 7-10 Speed: 130 mph Enclosure: Closed Risk Category: II EXP: C Mean Height: 15.00 ft TCDL: 5.0 psf BCDL: 5.0 psf MWFRS Parallel Dist: 0 to h/2 C&C Dist a: 3.00 ft Loc. from endwall: Any GCpi: 0.18 Wind Duration: 1.60	Pg: NA Ct: NA CAT: NA Pf: NA Ce: NA Lu: NA Cs: NA Snow Duration: NA **Code / Misc Criteria** Bldg Code: FBC 2014 RES TPI Std: 2007 Rep Factors Used: Yes FT/RT:20(0)/10(0) Plate Type(s): WAVE	PP Deflection in loc L/defl L/# VERT(LL): 0.000 D 999 240 VERT(TL): 0.000 D 999 180 HORZ(LL): 0.000 D - - HORZ(TL): 0.001 D - - Creep Factor: 1.5 Max TC CSI: 0.031 Max BC CSI: 0.026 Max Web CSI: 0.003 VIEW Ver: 16.02.01B.0131.17	Loc R / U / Rw / Rh / RL / W C* 86 / 11 / 49 / - / 12 / 60.0 Wind reactions based on MWFRS A Min Brg Width Req = - Bearing A is a rigid surface. Members not listed have forces less than 375#

Lumber

Top chord 2x4 SP M-31
Bot chord 2x4 SP M-31
Webs 2x4 SP M-31

Plating Notes

All plates are 2X4(B1) except as noted.

Wind

Wind loads based on MWFRS with additional C&C member design.

Additional Notes

See DWGS A14015ENC101014 & GBLLETIN1014 for gable wind bracing and other requirements.

#0 278

04/14/2017

****WARNING**** READ AND FOLLOW ALL NOTES ON THIS DRAWING!
****IMPORTANT**** FURNISH THIS DRAWING TO ALL CONTRACTORS INCLUDING THE INSTALLERS

Trusses require extreme care in fabricating, handling, shipping, installing and bracing. Refer to and follow the latest edition of BCSI (Building Component Safety Information, by TPI and SBCA) for safety practices prior to performing these functions. Installers shall provide temporary bracing per BCSI. Unless noted otherwise,top chord shall have properly attached structural sheathing and bottom chord shall have a properly attached rigid ceiling. Locations shown for permanent lateral restraint of webs shall have bracing installed per BCSI sections B3, B7, or B10, as applicable. Apply plates to each face of truss and position as shown above and on the Joint Details, unless noted otherwise. Refer to drawings 160A-Z for standard plate positions.

Alpine, a division of ITW Building Components Group Inc. shall not be responsible for any deviation from this drawing,any failure to build the truss in conformance with ANSI/TPI 1, or for handling, shipping, installation and bracing of trusses**A seal on this drawing or cover page listing this drawing, indicates acceptance of professional engineering responsibility solely for the design shown. The suitability and use of this drawing for any structure is the responsibility of the Building Designer per ANSI/TPI 1 Sec.2.**

For more information see this job's general notes page and these web sites: ALPINE: www.alpineitw.com; TPI: www.tpinst.org; SBCA: www.sbcindustry.com; ICC: www.iccsafe.org

ALPINE
AN ITW COMPANY
2400 Lake Orange Dr.
Suite 150
Orlando FL, 32837

Job Number: 16-0982 HUBBART RESIDENCE **Truss Label:** L02	Ply: 1 Qty: 1	SEQN: 468480 / T76 COMN FROM: CDM	Cust: R215 JRef: 1VZZ2150001 DrwNo: 104.17.1307.16237 KM / DF 04/14/2017

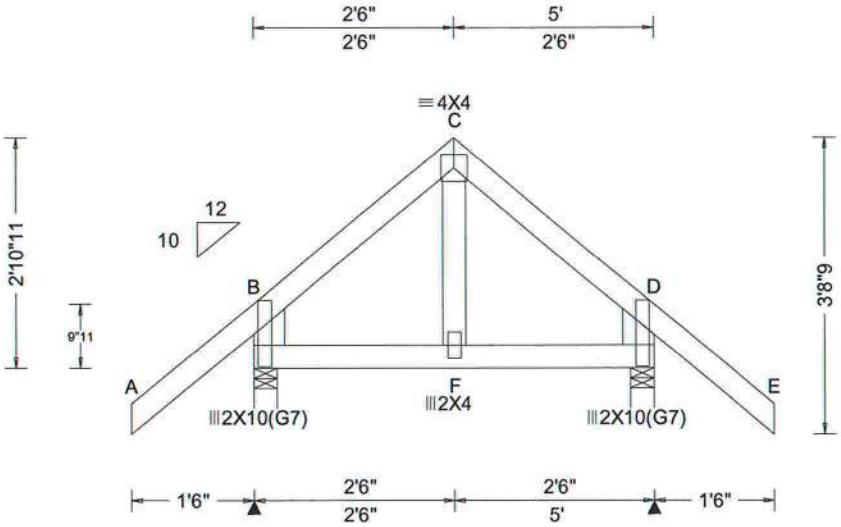

Loading Criteria (psf)

TCLL:	20.00
TCDL:	10.00
BCLL:	0.00
BCDL:	10.00
Des Ld:	40.00
NCBCLL:	10.00
Soffit:	2.00

Load Duration: 1.25
Spacing: 24.0 "

Wind Criteria
Wind Std: ASCE 7-10
Speed: 130 mph
Enclosure: Closed
Risk Category: II
EXP: C
Mean Height: 15.00 ft
TCDL: 5.0 psf
BCDL: 5.0 psf
MWFRS Parallel Dist: 0 to h/2
C&C Dist a: 3.00 ft
Loc. from endwall: Any
GCpi: 0.18
Wind Duration: 1.60

Snow Criteria (Pg,Pf in PSF)
Pg: NA Ct: NA CAT: NA
Pf: NA Ce: NA
Lu: NA Cs: NA
Snow Duration: NA

Code / Misc Criteria
Bldg Code: FBC 2014 RES
TPI Std: 2007
Rep Factors Used: Yes
FT/RT:20(0)/10(0)
Plate Type(s):
WAVE

Defl/CSI Criteria

PP Deflection in	loc	L/defl	L/#
VERT(LL): 0.002	F	999	240
VERT(TL): 0.004	F	999	180
HORZ(LL): 0.001	F	-	-
HORZ(TL): 0.003	F	-	-

Creep Factor: 1.5
Max TC CSI: 0.085
Max BC CSI: 0.037
Max Web CSI: 0.008

VIEW Ver: 16.02.01B.0131.17

▲Maximum Reactions (lbs)

Loc	R	/ U	/ Rw	/ Rh	/ RL	/ W
B	322	/ 52	/ 229	/ -	/ 131	/ 3.5
D	322	/ 52	/ 229	/ -	/ -	/ 3.5

Wind reactions based on MWFRS
B Min Brg Width Req = 1.5
D Min Brg Width Req = 1.5
Bearings B & D are a rigid surface.

Members not listed have forces less than 375#

Lumber

Top chord 2x4 SP M-31
Bot chord 2x4 SP M-31
Webs 2x4 SP M-31
:Lt Stub Wedge 2x6 SP M-31:
:Rt Stub Wedge 2x6 SP M-31:

Wind

Wind loads based on MWFRS with additional C&C member design.

#0 278

04/14/2017

****WARNING**** READ AND FOLLOW ALL NOTES ON THIS DRAWING!
****IMPORTANT**** FURNISH THIS DRAWING TO ALL CONTRACTORS INCLUDING THE INSTALLERS

Trusses require extreme care in fabricating, handling, shipping, installing and bracing. Refer to and follow the latest edition of BCSI (Building Component Safety Information, by TPI and SBCA) for safety practices prior to performing these functions. Installers shall provide temporary bracing per BCSI. Unless noted otherwise,top chord shall have properly attached structural sheathing and bottom chord shall have a properly attached rigid ceiling. Locations shown for permanent lateral restraint of webs shall have bracing installed per BCSI sections B3, B7, or B10, as applicable. Apply plates to each face of truss and position as shown above and on the Joint Details, unless noted otherwise. Refer to drawings 160A-Z for standard plate positions.

Alpine, a division of ITW Building Components Group Inc. shall not be responsible for any deviation from this drawing,any failure to build the truss in conformance with ANSI/TPI 1, or for handling, shipping, installation and bracing of trusses**A seal on this drawing or cover page listing this drawing, indicates acceptance of professional engineering responsibility solely for the design shown. The suitability and use of this drawing for any structure is the responsibility of the Building Designer per ANSI/TPI 1 Sec.2.**

For more information see this job's general notes page and these web sites: ALPINE: www.alpineitw.com; TPI: www.tpinst.org; SBCA: www.sbcindustry.com; ICC: www.iccsafe.org

ALPINE
AN ITW COMPANY
2400 Lake Orange Dr.
Suite 150
Orlando FL, 32837

Job Number: 16-0982 HUBBART RESIDENCE **Truss Label:** M01	Ply: 1 Qty: 1	SEQN: 468548 / T47 COMN FROM: CDM	Cust: R215 JRef: 1VZZ2150001 DrwNo: 104.17.1307.19727 KM / DF 04/14/2017

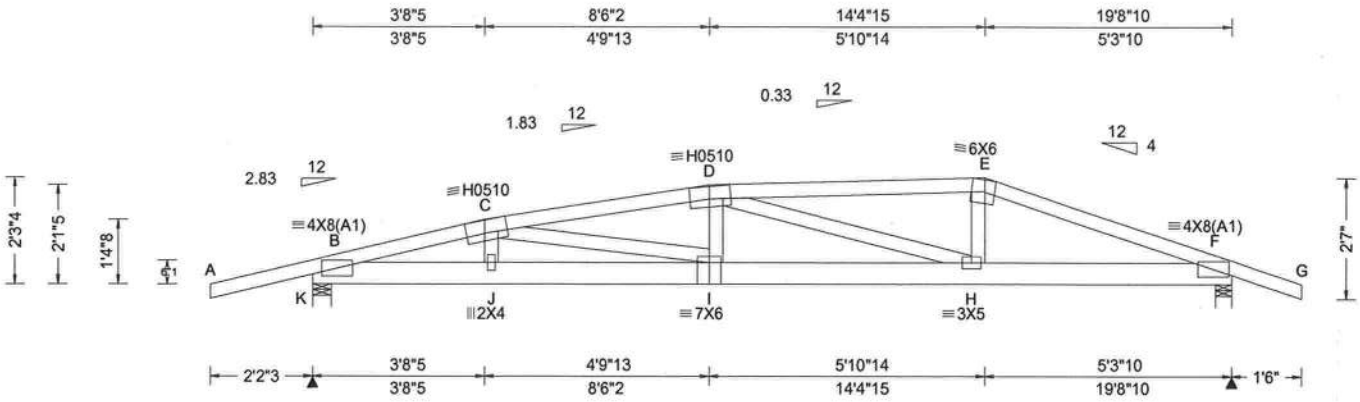

Loading Criteria (psf)

TCLL:	20.00
TCDL:	10.00
BCLL:	0.00
BCDL:	10.00
Des Ld:	40.00
NCBCLL:	10.00
Soffit:	2.00

Load Duration: 1.25
Spacing: 24.0 "

Wind Criteria
Wind Std: ASCE 7-10
Speed: 130 mph
Enclosure: Closed
Risk Category: II
EXP: C
Mean Height: 15.00 ft
TCDL: 5.0 psf
BCDL: 5.0 psf
MWFRS Parallel Dist: 0 to h/2
C&C Dist a: 3.00 ft
Loc. from endwall: not in 9.00 ft
GCpi: 0.18
Wind Duration: 1.60

Snow Criteria (Pg,Pf in PSF)
Pg: NA Ct: NA CAT: NA
Pf: NA Ce: NA
Lu: NA Cs: NA
Snow Duration: NA

Code / Misc Criteria
Bldg Code: FBC 2014 RES
TPI Std: 2007
Rep Factors Used: Yes
FT/RT:20(0)/10(0)
Plate Type(s):
WAVE, HS

Defl/CSI Criteria

PP Deflection in	loc	L/defl	L/#
VERT(LL): 0.217	I	999	240
VERT(TL): 0.521	I	447	180
HORZ(LL): 0.036	H	-	-
HORZ(TL): 0.086	H	-	-

Creep Factor: 1.5
Max TC CSI: 0.680
Max BC CSI: 0.527
Max Web CSI: 0.471

VIEW Ver: 16.02.01B.0131.17

▲ Maximum Reactions (lbs)

Loc	R	/ U	/ Rw	/ Rh	/ RL	/ W
K	1755	/ 511	/ -	/ -	/ -	/ 4.9
F	2007	/ 370	/ -	/ -	/ -	/ 4.0

Wind reactions based on MWFRS
K Min Brg Width Req = 1.5
F Min Brg Width Req = 1.7
Bearings K & F are a rigid surface.

Members not listed have forces less than 375#

Maximum Top Chord Forces Per Ply (lbs)

Chords	Tens.	Comp.	Chords	Tens.	Comp.
B - C	886	-5107	D - E	779	-4646
C - D	1007	-6057	E - F	817	-4783

Maximum Bot Chord Forces Per Ply (lbs)

Chords	Tens.	Comp.	Chords	Tens.	Comp.
B - J	4944	-857	I - H	5959	-985
J - I	4912	-842	H - F	4493	-759

Maximum Web Forces Per Ply (lbs)

Webs	Tens.	Comp.	Webs	Tens.	Comp.
C - I	1069	-146	H - E	905	-122
D - H	217	-1390			

Lumber

Top chord 2x4 SP M-31
Bot chord 2x6 SP M-31
Webs 2x4 SP M-31

Special Loads

------(Lumber Dur.Fac.=1.25 / Plate Dur.Fac.=1.25)

TC- From	61 plf at	-2.18 to	61 plf at	0.76
TC- From	30 plf at	0.76 to	30 plf at	3.69
TC- From	30 plf at	3.69 to	30 plf at	8.51
TC- From	30 plf at	8.51 to	30 plf at	14.41
TC- From	61 plf at	14.41 to	61 plf at	21.22
BC- From	4 plf at	-2.18 to	4 plf at	0.00
BC- From	10 plf at	0.00 to	10 plf at	14.41
BC- From	20 plf at	14.41 to	20 plf at	19.72
BC- From	4 plf at	19.72 to	4 plf at	21.22

TC- -78 lb Conc. Load at 0.76
TC- 216 lb Conc. Load at 3.69
TC- 120 lb Conc. Load at 6.14
TC- 596 lb Conc. Load at 8.51
TC- 217 lb Conc. Load at 11.78
TC- 210 lb Conc. Load at 13.79
TC- 207 lb Conc. Load at 14.41
BC- -6 lb Conc. Load at 0.76
BC- 136 lb Conc. Load at 3.69
BC- 81 lb Conc. Load at 6.14
BC- 126 lb Conc. Load at 8.51
BC- 147 lb Conc. Load at 11.78,13.79
BC- 370 lb Conc. Load at 14.41

Wind

Wind loads and reactions based on MWFRS.

#0 278

04/14/2017

****WARNING**** READ AND FOLLOW ALL NOTES ON THIS DRAWING!
****IMPORTANT**** FURNISH THIS DRAWING TO ALL CONTRACTORS INCLUDING THE INSTALLERS

Trusses require extreme care in fabricating, handling, shipping, installing and bracing. Refer to and follow the latest edition of BCSI (Building Component Safety Information, by TPI and SBCA) for safety practices prior to performing these functions. Installers shall provide temporary bracing per BCSI. Unless noted otherwise,top chord shall have properly attached structural sheathing and bottom chord shall have a properly attached rigid ceiling. Locations shown for permanent lateral restraint of webs shall have bracing installed per BCSI sections B3, B7, or B10, as applicable. Apply plates to each face of truss and position as shown above and on the Joint Details, unless noted otherwise. Refer to drawings 160A-Z for standard plate positions.

Alpine, a division of ITW Building Components Group Inc. shall not be responsible for any deviation from this drawing,any failure to build the truss in conformance with ANSI/TPI 1, or for handling, shipping, installation and bracing of trusses**A seal on this drawing or cover page listing this drawing, indicates acceptance of professional engineering responsibility solely for the design shown. The suitability and use of this drawing for any structure is the responsibility of the Building Designer per ANSI/TPI 1 Sec.2.**

For more information see this job's general notes page and these web sites: ALPINE: www.alpineitw.com; TPI: www.tpinst.org; SBCA: www.sbcindustry.com; ICC: www.iccsafe.org

ALPINE
AN ITW COMPANY
2400 Lake Orange Dr.
Suite 150
Orlando FL, 32837

Job Number: 16-0982 HUBBART RESIDENCE **Truss Label:** M02	Ply: 1 Qty: 1	SEQN: 468503 / T88 COMN FROM: CDM	Cust: R215 JRef: 1VZZ2150001 DrwNo: 104.17.1307.21643 KM / DF 04/14/2017

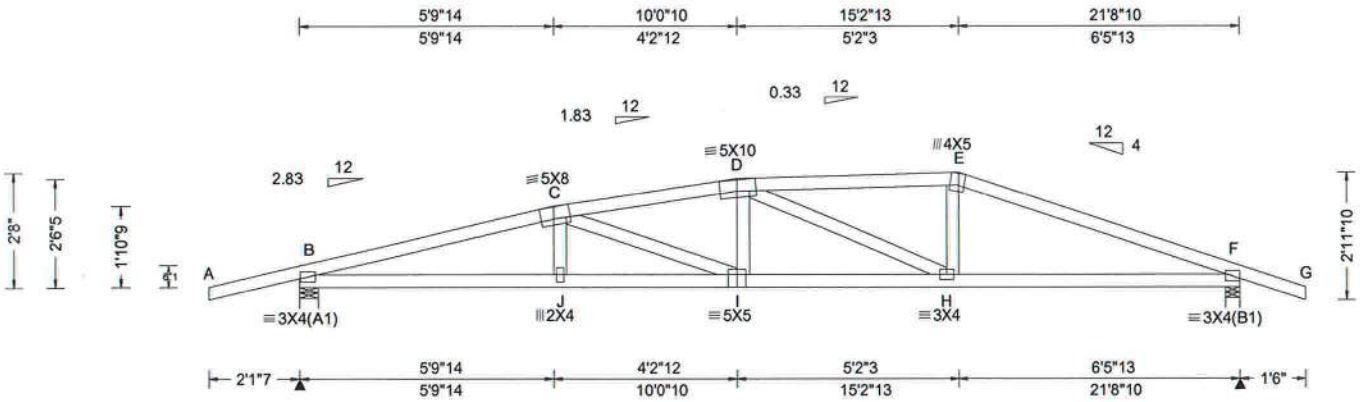

Loading Criteria (psf)

TCLL:	20.00
TCDL:	10.00
BCLL:	0.00
BCDL:	10.00
Des Ld:	40.00
NCBCLL:	10.00
Soffit:	2.00

Load Duration: 1.25
Spacing: 24.0 "

Wind Criteria
Wind Std: ASCE 7-10
Speed: 130 mph
Enclosure: Closed
Risk Category: II
EXP: C
Mean Height: 15.00 ft
TCDL: 5.0 psf
BCDL: 5.0 psf
MWFRS Parallel Dist: h/2 to h
C&C Dist a: 3.00 ft
Loc. from endwall: not in 9.00 ft
GCpi: 0.18
Wind Duration: 1.60

Snow Criteria (Pg,Pf in PSF)
Pg: NA Ct: NA CAT: NA
Pf: NA Ce: NA
Lu: NA Cs: NA
Snow Duration: NA

Code / Misc Criteria
Bldg Code: FBC 2014 RES
TPI Std: 2007
Rep Factors Used: Yes
FT/RT:20(0)/10(0)
Plate Type(s):
WAVE

Defl/CSI Criteria

PP Deflection in	loc	L/defl	L/#
VERT(LL): 0.117	I	999	240
VERT(TL): 0.286	I	900	180
HORZ(LL): 0.029	H	-	-
HORZ(TL): 0.071	H	-	-

Creep Factor: 1.5
Max TC CSI: 0.364
Max BC CSI: 0.432
Max Web CSI: 0.128

VIEW Ver: 16.02.01B.0131.17

▲ Maximum Reactions (lbs)

Loc	R	/ U	/ Rw	/ Rh	/ RL	/ W
B	1014	/ 220	/ 526	/ -	/ 53	/ 4.9
F	970	/ 188	/ 575	/ -	/ -	/ 4.0

Wind reactions based on MWFRS
B Min Brg Width Req = 1.5
F Min Brg Width Req = 1.5
Bearings B & F are a rigid surface.

Members not listed have forces less than 375#

Maximum Top Chord Forces Per Ply (lbs)

Chords	Tens.	Comp.	Chords	Tens.	Comp.
B - C	690	-2236	D - E	533	-1654
C - D	662	-2100	E - F	529	-1774

Maximum Bot Chord Forces Per Ply (lbs)

Chords	Tens.	Comp.	Chords	Tens.	Comp.
B - J	2124	-607	I - H	2061	-558
J - I	2125	-602	H - F	1616	-438

Maximum Web Forces Per Ply (lbs)

Webs	Tens.	Comp.
D - H	197	-453

Lumber
Top chord 2x4 SP M-31
Bot chord 2x4 SP M-31
Webs 2x4 SP M-31

Wind
Wind loads based on MWFRS with additional C&C member design.

#0 278
04/14/2017

****WARNING**** READ AND FOLLOW ALL NOTES ON THIS DRAWING!
****IMPORTANT**** FURNISH THIS DRAWING TO ALL CONTRACTORS INCLUDING THE INSTALLERS

Trusses require extreme care in fabricating, handling, shipping, installing and bracing. Refer to and follow the latest edition of BCSI (Building Component Safety Information, by TPI and SBCA) for safety practices prior to performing these functions. Installers shall provide temporary bracing per BCSI. Unless noted otherwise,top chord shall have properly attached structural sheathing and bottom chord shall have a properly attached rigid ceiling. Locations shown for permanent lateral restraint of webs shall have bracing installed per BCSI sections B3, B7, or B10, as applicable. Apply plates to each face of truss and position as shown above and on the Joint Details, unless noted otherwise. Refer to drawings 160A-Z for standard plate positions.

Alpine, a division of ITW Building Components Group Inc. shall not be responsible for any deviation from this drawing,any failure to build the truss in conformance with ANSI/TPI 1, or for handling, shipping, installation and bracing of trusses**A seal on this drawing or cover page listing this drawing, indicates acceptance of professional engineering responsibility solely for the design shown. The suitability and use of this drawing for any structure is the responsibility of the Building Designer per ANSI/TPI 1 Sec.2.**

For more information see this job's general notes page and these web sites: ALPINE: www.alpineitw.com; TPI: www.tpinst.org; SBCA: www.sbcindustry.com; ICC: www.iccsafe.org

ALPINE
AN ITW COMPANY
2400 Lake Orange Dr.
Suite 150
Orlando FL, 32837

Job Number: 16-0982 HUBBART RESIDENCE **Truss Label:** M03	Ply: 1 Qty: 1	SEQN: 468500 / T105 COMN FROM: CDM	Cust: R215 JRef: 1VZZ2150001 DrwNo: 104.17.1307.23490 KM / DF 04/14/2017

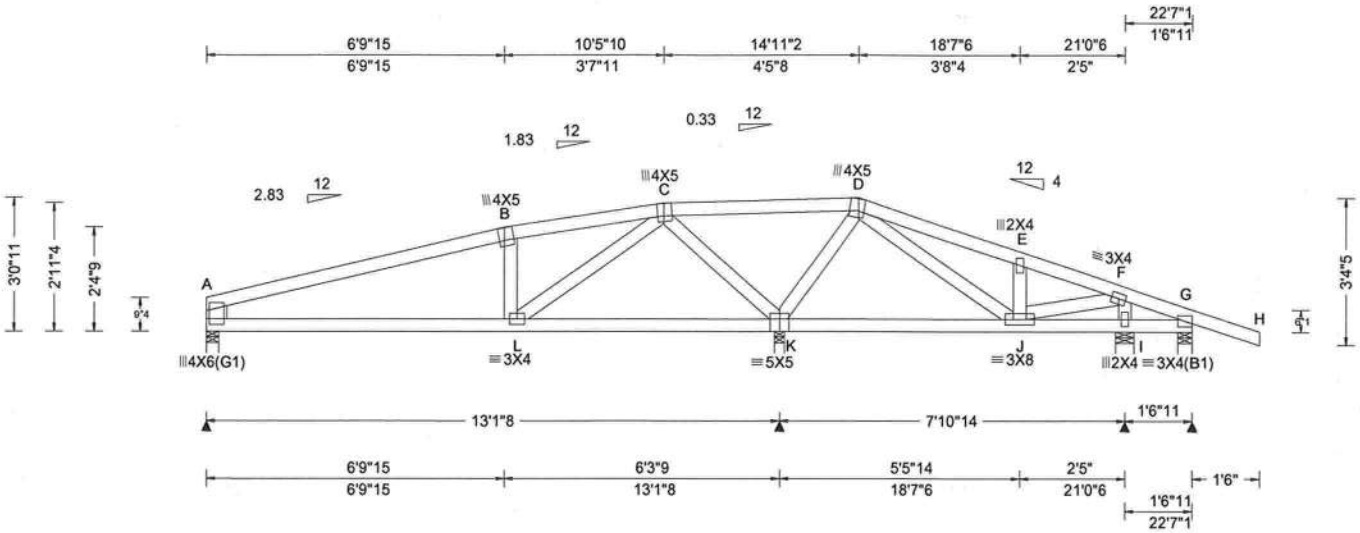

Loading Criteria (psf)
TCLL: 20.00
TCDL: 10.00
BCLL: 0.00
BCDL: 10.00
Des Ld: 40.00
NCBCLL: 10.00
Soffit: 2.00
Load Duration: 1.25
Spacing: 24.0 "

Wind Criteria
Wind Std: ASCE 7-10
Speed: 130 mph
Enclosure: Closed
Risk Category: II
EXP: C
Mean Height: 15.00 ft
TCDL: 5.0 psf
BCDL: 5.0 psf
MWFRS Parallel Dist: h/2 to h
C&C Dist a: 3.00 ft
Loc. from endwall: not in 9.00 ft
GCpi: 0.18
Wind Duration: 1.60

Snow Criteria (Pg,Pf in PSF)
Pg: NA Ct: NA CAT: NA
Pf: NA Ce: NA
Lu: NA Cs: NA
Snow Duration: NA

Code / Misc Criteria
Bldg Code: FBC 2014 RES
TPI Std: 2007
Rep Factors Used: Yes
FT/RT:20(0)/10(0)
Plate Type(s):
WAVE

Defl/CSI Criteria

PP Deflection in	loc	L/defl	L/#
VERT(LL): 0.010	B	999	240
VERT(TL): 0.029	B	999	180
HORZ(LL): 0.003	L	-	-
HORZ(TL): 0.008	L	-	-

Creep Factor: 1.5
Max TC CSI: 0.176
Max BC CSI: 0.188
Max Web CSI: 0.121

VIEW Ver: 16.02.01B.0131.17

▲ Maximum Reactions (lbs)

Loc	R	/ U	/ Rw	/ Rh	/ RL	/ W
A	432	/ 85	/ 218	/ -	/ 51	/ 3.4
K	1100	/ 191	/ 579	/ -	/ -	/ 2.7
I	326	/ 55	/ 164	/ -	/ -	/ 5.3
G	173	/ 59	/ 110	/ -	/ -	/ 4.0

Wind reactions based on MWFRS
A Min Brg Width Req = 1.5
K Min Brg Width Req = 1.5
I Min Brg Width Req = 1.5
G Min Brg Width Req = 1.5
Bearings A, K, I, & G are a rigid surface.

Members not listed have forces less than 375#

Maximum Top Chord Forces Per Ply (lbs)

Chords	Tens.	Comp.	Chords	Tens.	Comp.
A - B	224	-673	C - D	506	-117
B - C	239	-595			

Maximum Bot Chord Forces Per Ply (lbs)

Chords	Tens.	Comp.
A - L	607	-158

Maximum Web Forces Per Ply (lbs)

Webs	Tens.	Comp.	Webs	Tens.	Comp.
L - C	652	-199	K - D	179	-518
C - K	293	-773	D - J	403	-122

Lumber
Top chord 2x4 SP M-31
Bot chord 2x4 SP M-31
Webs 2x4 SP M-31
:Lt Stub Wedge 2x4 SP M-31:

Wind
Wind loads based on MWFRS with additional C&C member design.

#0 278
04/14/2017

****WARNING**** READ AND FOLLOW ALL NOTES ON THIS DRAWING!
****IMPORTANT**** FURNISH THIS DRAWING TO ALL CONTRACTORS INCLUDING THE INSTALLERS

Trusses require extreme care in fabricating, handling, shipping, installing and bracing. Refer to and follow the latest edition of BCSI (Building Component Safety Information, by TPI and SBCA) for safety practices prior to performing these functions. Installers shall provide temporary bracing per BCSI. Unless noted otherwise,top chord shall have properly attached structural sheathing and bottom chord shall have a properly attached rigid ceiling. Locations shown for permanent lateral restraint of webs shall have bracing installed per BCSI sections B3, B7, or B10, as applicable. Apply plates to each face of truss and position as shown above and on the Joint Details, unless noted otherwise. Refer to drawings 160A-Z for standard plate positions.

Alpine, a division of ITW Building Components Group Inc. shall not be responsible for any deviation from this drawing,any failure to build the truss in conformance with ANSI/TPI 1, or for handling, shipping, installation and bracing of trusses**A seal on this drawing or cover page listing this drawing, indicates acceptance of professional engineering responsibility solely for the design shown. The suitability and use of this drawing for any structure is the responsibility of the Building Designer per ANSI/TPI 1 Sec.2.**

For more information see this job's general notes page and these web sites: ALPINE: www.alpineitw.com; TPI: www.tpinst.org; SBCA: www.sbcindustry.com; ICC: www.iccsafe.org

ALPINE
AN ITW COMPANY
2400 Lake Orange Dr.
Suite 150
Orlando FL, 32837

Job Number: 16-0982 HUBBART RESIDENCE **Truss Label:** M04	Ply: 1 Qty: 1	SEQN: 468497 / T115 COMN FROM: CDM	Cust: R215 JRef: 1VZZ2150001 DrwNo: 104.17.1307.24587 KM / DF 04/14/2017

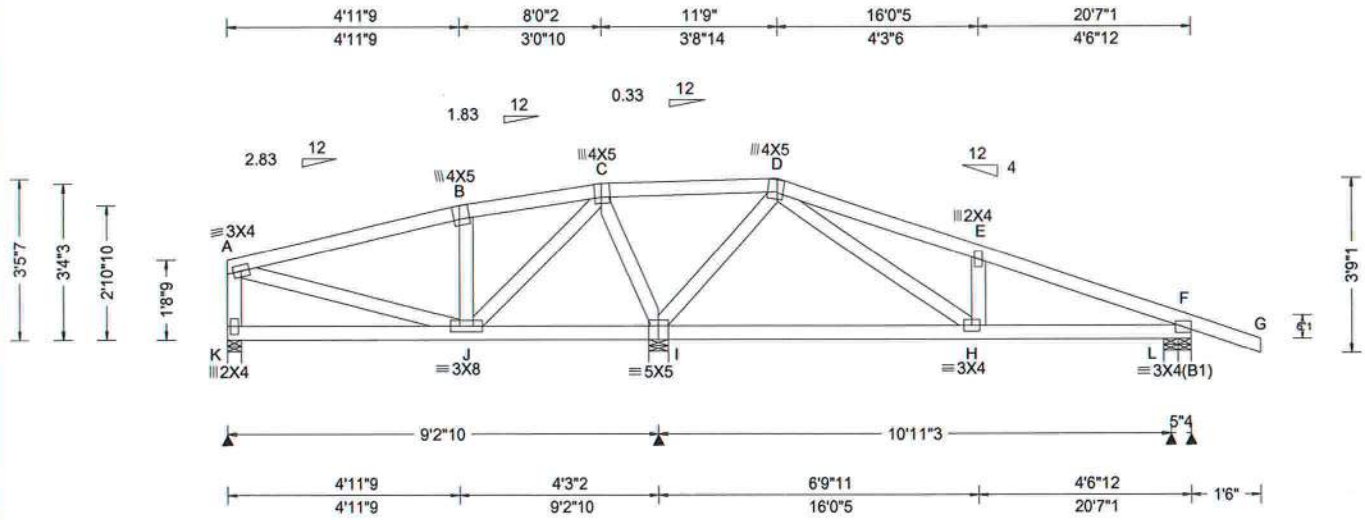

Loading Criteria (psf)	**Wind Criteria**	**Snow Criteria** (Pg,Pf in PSF)	**Defl/CSI Criteria**
TCLL: 20.00 TCDL: 10.00 BCLL: 0.00 BCDL: 10.00 Des Ld: 40.00 NCBCLL: 10.00 Soffit: 2.00 Load Duration: 1.25 Spacing: 24.0 "	Wind Std: ASCE 7-10 Speed: 130 mph Enclosure: Closed Risk Category: II EXP: C Mean Height: 15.00 ft TCDL: 5.0 psf BCDL: 5.0 psf MWFRS Parallel Dist: h/2 to h C&C Dist a: 3.00 ft Loc. from endwall: not in 4.50 ft GCpi: 0.18 Wind Duration: 1.60	Pg: NA Ct: NA CAT: NA Pf: NA Ce: NA Lu: NA Cs: NA Snow Duration: NA **Code / Misc Criteria** Bldg Code: FBC 2014 RES TPI Std: 2007 Rep Factors Used: Yes FT/RT:20(0)/10(0) Plate Type(s): WAVE	PP Deflection in loc L/defl L/# VERT(LL): 0.011 E 999 240 VERT(TL): 0.031 E 999 180 HORZ(LL): -0.002 E - - HORZ(TL): 0.006 D - - Creep Factor: 1.5 Max TC CSI: 0.119 Max BC CSI: 0.139 Max Web CSI: 0.107 VIEW Ver: 16.02.01B.0131.17

▲ Maximum Reactions (lbs)

Loc	R	/ U	/ Rw	/ Rh	/ RL	/ W
K	264	/ 44	/ 110	/ -	/ 52	/ 3.4
I	1126	/ 200	/ 625	/ -	/ -	/ 4.9
L	53	/ 44	/ 67	/ -	/ -	/ 3.7
F	490	/ 97	/ 292	/ -	/ -	/ 3.4

Wind reactions based on MWFRS
K Min Brg Width Req = 1.5
I Min Brg Width Req = 1.5
L Min Brg Width Req = 1.5
L Min Brg Width Req = 1.5
Bearings K, I, L, & L are a rigid surface.

Members not listed have forces less than 375#

Maximum Top Chord Forces Per Ply (lbs)

Chords	Tens.	Comp.	Chords	Tens.	Comp.
C - D	506	- 89	E - F	123	- 506
D - E	164	- 480			

Maximum Bot Chord Forces Per Ply (lbs)

Chords	Tens.	Comp.
H - F	878	- 146

Maximum Web Forces Per Ply (lbs)

Webs	Tens.	Comp.	Webs	Tens.	Comp.
J - C	475	- 156	I - D	206	- 607
C - I	217	- 572	D - H	621	- 169

Lumber

Top chord 2x4 SP M-31
Bot chord 2x4 SP M-31
Webs 2x4 SP M-31

Wind

Wind loads based on MWFRS with additional C&C member design.

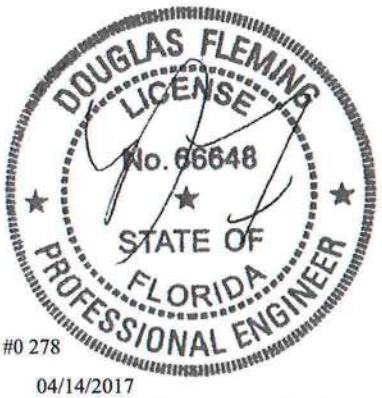

#0 278

04/14/2017

****WARNING**** READ AND FOLLOW ALL NOTES ON THIS DRAWING!
****IMPORTANT**** FURNISH THIS DRAWING TO ALL CONTRACTORS INCLUDING THE INSTALLERS

Trusses require extreme care in fabricating, handling, shipping, installing and bracing. Refer to and follow the latest edition of BCSI (Building Component Safety Information, by TPI and SBCA) for safety practices prior to performing these functions. Installers shall provide temporary bracing per BCSI. Unless noted otherwise,top chord shall have properly attached structural sheathing and bottom chord shall have a properly attached rigid ceiling. Locations shown for permanent lateral restraint of webs shall have bracing installed per BCSI sections B3, B7, or B10, as applicable. Apply plates to each face of truss and position as shown above and on the Joint Details, unless noted otherwise. Refer to drawings 160A-Z for standard plate positions.

Alpine, a division of ITW Building Components Group Inc. shall not be responsible for any deviation from this drawing,any failure to build the truss in conformance with ANSI/TPI 1, or for handling, shipping, installation and bracing of trusses**A seal on this drawing or cover page listing this drawing, indicates acceptance of professional engineering responsibility solely for the design shown. The suitability and use of this drawing for any structure is the responsibility of the Building Designer per ANSI/TPI 1 Sec.2.**

For more information see this job's general notes page and these web sites: ALPINE: www.alpineitw.com; TPI: www.tpinst.org; SBCA: www.sbcindustry.com; ICC: www.iccsafe.org

ALPINE
AN ITW COMPANY
2400 Lake Orange Dr.
Suite 150
Orlando FL, 32837

Job Number: 16-0982 HUBBART RESIDENCE **Truss Label:** M05	Ply: 1 Qty: 1	SEQN: 468494 / T5 COMN FROM: CDM	Cust: R215 JRef: 1VZZ2150001 DrwNo: 104.17.1307.25800 KM / DF 04/14/2017

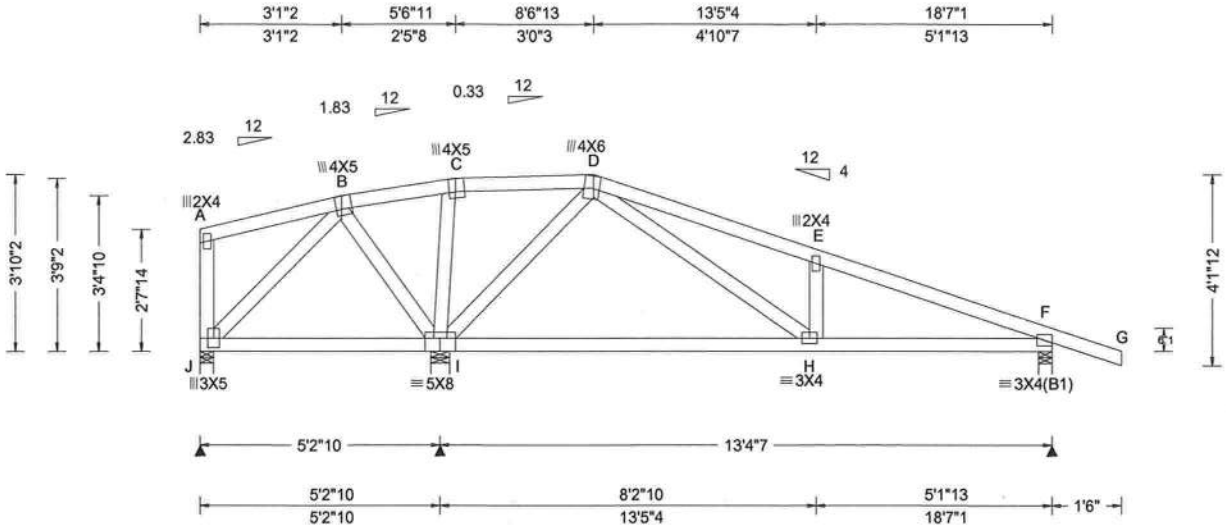

Loading Criteria (psf)

TCLL:	20.00
TCDL:	10.00
BCLL:	0.00
BCDL:	10.00
Des Ld:	40.00
NCBCLL:	10.00
Soffit:	2.00

Load Duration: 1.25
Spacing: 24.0 "

Wind Criteria
Wind Std: ASE 7-10
Speed: 130 mph
Enclosure: Closed
Risk Category: II
EXP: C
Mean Height: 15.00 ft
TCDL: 5.0 psf
BCDL: 5.0 psf
MWFRS Parallel Dist: 0 to h/2
C&C Dist a: 3.00 ft
Loc. from endwall: not in 4.50 ft
GCpi: 0.18
Wind Duration: 1.60

Snow Criteria (Pg,Pf in PSF)
Pg: NA Ct: NA CAT: NA
Pf: NA Ce: NA
Lu: NA Cs: NA
Snow Duration: NA

Code / Misc Criteria
Bldg Code: FBC 2014 RES
TPI Std: 2007
Rep Factors Used: Yes
FT/RT:20(0)/10(0)
Plate Type(s):
WAVE

Defl/CSI Criteria

PP Deflection in	loc	L/defl	L/#
VERT(LL): 0.017	E	999	240
VERT(TL): 0.044	E	999	180
HORZ(LL): 0.003	D	-	-
HORZ(TL): 0.008	D	-	-

Creep Factor: 1.5
Max TC CSI: 0.121
Max BC CSI: 0.168
Max Web CSI: 0.158

VIEW Ver: 16.02.01B.0131.17

▲ Maximum Reactions (lbs)

Loc	R	/ U	/ Rw	/ Rh	/ RL	/ W
J	11	/ 260	/ 10	/ -	/ 76	/ 3.4
I	1255	/ 203	/ 731	/ -	/ -	/ 4.9
F	507	/ 105	/ 330	/ -	/ -	/ 3.5

Wind reactions based on MWFRS
J Min Brg Width Req = 1.5
I Min Brg Width Req = 1.5
F Min Brg Width Req = 1.5
Bearings J, I, & F are a rigid surface.

Members not listed have forces less than 375#

Maximum Top Chord Forces Per Ply (lbs)

Chords	Tens.	Comp.	Chords	Tens.	Comp.
B - C	548	-94	D - E	213	-614
C - D	509	-71	E - F	166	-639

Maximum Bot Chord Forces Per Ply (lbs)

Chords	Tens.	Comp.
H - F	560	-110

Maximum Web Forces Per Ply (lbs)

Webs	Tens.	Comp.	Webs	Tens.	Comp.
J - B	454	-62	I - D	213	-655
B - I	155	-452	D - H	727	-185

Lumber
Top chord 2x4 SP M-31
Bot chord 2x4 SP M-31
Webs 2x4 SP M-31

Wind
Wind loads based on MWFRS with additional C&C member design.
Left end vertical not exposed to wind pressure.

Additional Notes
Negative reaction(s) of -260# MAX. from a non-wind load case requires uplift connection. See Maximum Reactions.

#0 278

04/14/2017

****WARNING**** READ AND FOLLOW ALL NOTES ON THIS DRAWING!
****IMPORTANT**** FURNISH THIS DRAWING TO ALL CONTRACTORS INCLUDING THE INSTALLERS

Trusses require extreme care in fabricating, handling, shipping, installing and bracing. Refer to and follow the latest edition of BCSI (Building Component Safety Information, by TPI and SBCA) for safety practices prior to performing these functions. Installers shall provide temporary bracing per BCSI. Unless noted otherwise,top chord shall have properly attached structural sheathing and bottom chord shall have a properly attached rigid ceiling. Locations shown for permanent lateral restraint of webs shall have bracing installed per BCSI sections B3, B7, or B10, as applicable. Apply plates to each face of truss and position as shown above and on the Joint Details, unless noted otherwise. Refer to drawings 160A-Z for standard plate positions.

Alpine, a division of ITW Building Components Group Inc. shall not be responsible for any deviation from this drawing,any failure to build the truss in conformance with ANSI/TPI 1, or for handling, shipping, installation and bracing of trusses**A seal on this drawing or cover page listing this drawing, indicates acceptance of professional engineering responsibility solely for the design shown. The suitability and use of this drawing for any structure is the responsibility of the Building Designer per ANSI/TPI 1 Sec.2.**

For more information see this job's general notes page and these web sites: ALPINE: www.alpineitw.com; TPI: www.tpinst.org; SBCA: www.sbcindustry.com; ICC: www.iccsafe.org

ALPINE
AN ITW COMPANY
2400 Lake Orange Dr.
Suite 150
Orlando FL, 32837

Job Number: 16-0982 HUBBART RESIDENCE **Truss Label:** M06	Ply: 1 Qty: 1	SEQN: 468491 / T106 COMN FROM: CDM	Cust: R215 JRef: 1VZZ2150001 DrwNo: 104.17.1307.26913 KM / DF 04/14/2017

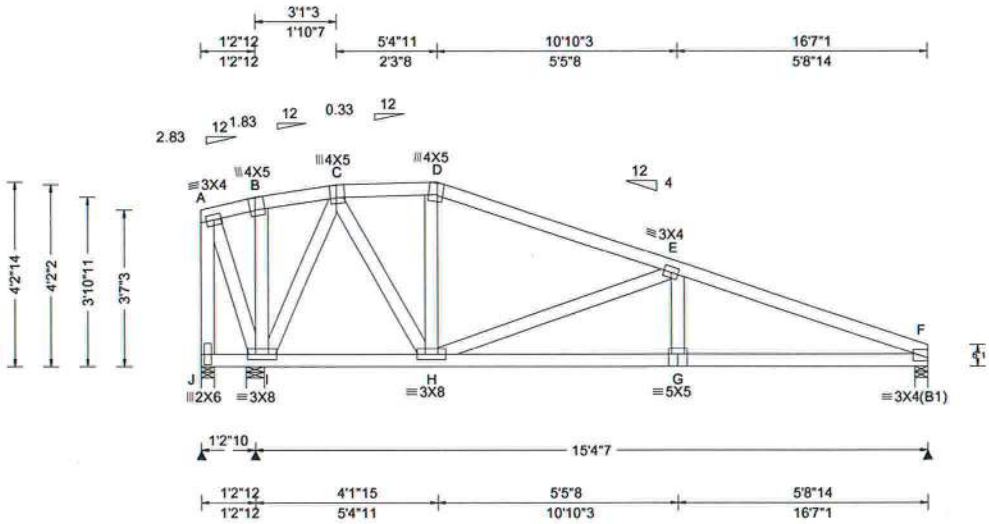

Loading Criteria (psf)

TCLL:	20.00
TCDL:	10.00
BCLL:	0.00
BCDL:	10.00
Des Ld:	40.00
NCBCLL:	10.00
Soffit:	2.00

Load Duration: 1.25
Spacing: 24.0 "

Wind Criteria
Wind Std: ASCE 7-10
Speed: 130 mph
Enclosure: Closed
Risk Category: II
EXP: C
Mean Height: 15.00 ft
TCDL: 5.0 psf
BCDL: 5.0 psf
MWFRS Parallel Dist: 0 to h/2
C&C Dist a: 3.00 ft
Loc. from endwall: Any
GCpi: 0.18
Wind Duration: 1.60

Snow Criteria (Pg,Pf in PSF)
Pg: NA Ct: NA CAT: NA
Pf: NA Ce: NA
Lu: NA Cs: NA
Snow Duration: NA

Code / Misc Criteria
Bldg Code: FBC 2014 RES
TPI Std: 2007
Rep Factors Used: Yes
FT/RT:20(0)/10(0)
Plate Type(s):
WAVE

Defl/CSI Criteria

PP Deflection in	loc	L/defl	L/#
VERT(LL): 0.023	G	999	240
VERT(TL): 0.060	G	999	180
HORZ(LL): 0.008	C	-	-
HORZ(TL): 0.020	C	-	-

Creep Factor: 1.5
Max TC CSI: 0.117
Max BC CSI: 0.153
Max Web CSI: 0.235

VIEW Ver: 16.02.01B.0131.17

▲ Maximum Reactions (lbs)

Loc	R	/ U	/ Rw	/ Rh	/ RL	/ W
J	-613	/ 613	/ 67	/ -	/ 89	/ 3.4
I	1373	/ 217	/ 808	/ -	/ -	/ 4.9
F	564	/ 95	/ 351	/ -	/ -	/ 3.5

Wind reactions based on MWFRS
J Min Brg Width Req = 1.5
I Min Brg Width Req = 1.5
F Min Brg Width Req = 1.5
Bearings J, I, & F are a rigid surface.

Members not listed have forces less than 375#

Maximum Top Chord Forces Per Ply (lbs)

Chords	Tens.	Comp.	Chords	Tens.	Comp.
D - E	211	-386	E - F	456	-1040

Maximum Bot Chord Forces Per Ply (lbs)

Chords	Tens.	Comp.	Chords	Tens.	Comp.
H - G	931	-383	G - F	936	-381

Maximum Web Forces Per Ply (lbs)

Webs	Tens.	Comp.	Webs	Tens.	Comp.
A - J	603	-225	C - H	555	-309
A - I	248	-596	H - E	374	-663
I - C	374	-670			

Lumber
Top chord 2x4 SP M-31
Bot chord 2x4 SP M-31
Webs 2x4 SP M-31

Wind
Wind loads based on MWFRS with additional C&C member design.
Left end vertical not exposed to wind pressure.

Additional Notes
Negative reaction(s) of -613# MAX. from a non-wind load case requires uplift connection. See Maximum Reactions.

#0 278

04/14/2017

****WARNING**** READ AND FOLLOW ALL NOTES ON THIS DRAWING!
****IMPORTANT**** FURNISH THIS DRAWING TO ALL CONTRACTORS INCLUDING THE INSTALLERS

Trusses require extreme care in fabricating, handling, shipping, installing and bracing. Refer to and follow the latest edition of BCSI (Building Component Safety Information, by TPI and SBCA) for safety practices prior to performing these functions. Installers shall provide temporary bracing per BCSI. Unless noted otherwise,top chord shall have properly attached structural sheathing and bottom chord shall have a properly attached rigid ceiling. Locations shown for permanent lateral restraint of webs shall have bracing installed per BCSI sections B3, B7, or B10, as applicable. Apply plates to each face of truss and position as shown above and on the Joint Details, unless noted otherwise. Refer to drawings 160A-Z for standard plate positions.

Alpine, a division of ITW Building Components Group Inc. shall not be responsible for any deviation from this drawing,any failure to build the truss in conformance with ANSI/TPI 1, or for handling, shipping, installation and bracing of trusses**A seal on this drawing or cover page listing this drawing, indicates acceptance of professional engineering responsibility solely for the design shown. The suitability and use of this drawing for any structure is the responsibility of the Building Designer per ANSI/TPI 1 Sec.2.**

For more information see this job's general notes page and these web sites: ALPINE: www.alpineitw.com; TPI: www.tpinst.org; SBCA: www.sbcindustry.com; ICC: www.iccsafe.org

ALPINE AN ITW COMPANY
2400 Lake Orange Dr.
Suite 150
Orlando FL, 32837

Job Number: 16-0982 HUBBART RESIDENCE **Truss Label:** M07	Ply: 2 Qty: 1	SEQN: 468488 / T121 COMN FROM: CDM	Cust: R215 JRef: 1VZZ2150001 DrwNo: 104.17.1307.28857 KM / DF 04/14/2017

2 Complete Trusses Required

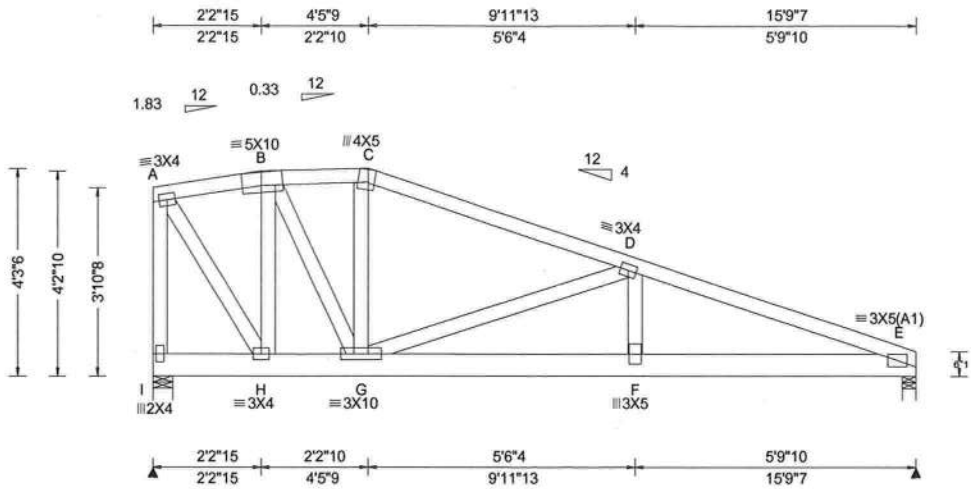

Loading Criteria (psf)
TCLL: 20.00
TCDL: 10.00
BCLL: 0.00
BCDL: 10.00
Des Ld: 40.00
NCBCLL: 0.00
Soffit: 2.00
Load Duration: 1.25
Spacing: 24.0 "

Wind Criteria
Wind Std: ASCE 7-10
Speed: 130 mph
Enclosure: Closed
Risk Category: II
EXP: C
Mean Height: 15.00 ft
TCDL: 5.0 psf
BCDL: 5.0 psf
MWFRS Parallel Dist: 0 to h/2
C&C Dist a: 3.00 ft
Loc. from endwall: NA
GCpi: 0.18
Wind Duration: 1.60

Snow Criteria (Pg,Pf in PSF)
Pg: NA Ct: NA CAT: NA
Pf: NA Ce: NA
Lu: NA Cs: NA
Snow Duration: NA

Code / Misc Criteria
Bldg Code: FBC 2014 RES
TPI Std: 2007
Rep Factors Used: No
FT/RT:20(0)/10(0)
Plate Type(s):
WAVE

Defl/CSI Criteria

PP Deflection in	loc	L/defl	L/#
VERT(LL): 0.039	F	999	240
VERT(TL): 0.094	F	999	180
HORZ(LL): 0.012	B	-	-
HORZ(TL): 0.028	B	-	-

Creep Factor: 1.5
Max TC CSI: 0.114
Max BC CSI: 0.290
Max Web CSI: 0.243

VIEW Ver: 16.02.01B.0131.17

▲ Maximum Reactions (lbs)

Loc	R	/ U	/ Rw	/ Rh	/ RL	/ W
I	1502	/ 28	/ -	/ -	/ -	/ 4.9
E	2431	/ -	/ 44	/ -	/ -	/ 3.5

Wind reactions based on MWFRS
I Min Brg Width Req = 1.5
E Min Brg Width Req = 1.5
Bearings I & E are a rigid surface.

Members not listed have forces less than 375#

Maximum Top Chord Forces Per Ply (lbs)

Chords	Tens.	Comp.	Chords	Tens.	Comp.
A - B	6	-422	C - D	12	-817
B - C	0	-754	D - E	0	-2113

Maximum Bot Chord Forces Per Ply (lbs)

Chords	Tens.	Comp.	Chords	Tens.	Comp.
H - G	412	-4	F - E	1986	0
G - F	1953	0			

Maximum Web Forces Per Ply (lbs)

Webs	Tens.	Comp.	Webs	Tens.	Comp.
A - I	19	-737	B - G	720	0
A - H	760	-6	G - D	0	-1286
B - H	13	-636	D - F	684	0

Lumber
Top chord 2x4 SP M-31
Bot chord 2x6 SP M-31
Webs 2x4 SP M-31

Nailnote
Nail Schedule:0.131"x3", min. nails
Top Chord: 1 Row @12.00" o.c.
Bot Chord: 1 Row @ 8.50" o.c.
Webs : 1 Row @ 4" o.c.
Use equal spacing between rows and stagger nails in each row to avoid splitting.

Special Loads
------(Lumber Dur.Fac.=1.25 / Plate Dur.Fac.=1.25)
TC- From 60 plf at 0.00 to 60 plf at 2.25
TC- From 60 plf at 2.25 to 60 plf at 4.46
TC- From 61 plf at 4.46 to 61 plf at 15.78
BC- From 20 plf at 0.00 to 20 plf at 2.72
BC- From 10 plf at 2.72 to 10 plf at 15.78
BC- 140 lb Conc. Load at 2.72
BC- 226 lb Conc. Load at 4.72
BC- 312 lb Conc. Load at 6.72
BC- 398 lb Conc. Load at 8.72
BC- 484 lb Conc. Load at 10.72
BC- 570 lb Conc. Load at 12.72
BC- 656 lb Conc. Load at 14.72

Wind
Wind loads and reactions based on MWFRS.
Left end vertical not exposed to wind pressure.

DOUGLAS FLEMING
LICENSE
No. 66648
STATE OF
FLORIDA
PROFESSIONAL ENGINEER
#0 278

04/14/2017

****WARNING**** READ AND FOLLOW ALL NOTES ON THIS DRAWING!
****IMPORTANT**** FURNISH THIS DRAWING TO ALL CONTRACTORS INCLUDING THE INSTALLERS

Trusses require extreme care in fabricating, handling, shipping, installing and bracing. Refer to and follow the latest edition of BCSI (Building Component Safety Information, by TPI and SBCA) for safety practices prior to performing these functions. Installers shall provide temporary bracing per BCSI. Unless noted otherwise,top chord shall have properly attached structural sheathing and bottom chord shall have a properly attached rigid ceiling. Locations shown for permanent lateral restraint of webs shall have bracing installed per BCSI sections B3, B7, or B10, as applicable. Apply plates to each face of truss and position as shown above and on the Joint Details, unless noted otherwise. Refer to drawings 160A-Z for standard plate positions.

Alpine, a division of ITW Building Components Group Inc. shall not be responsible for any deviation from this drawing,any failure to build the truss in conformance with ANSI/TPI 1, or for handling, shipping, installation and bracing of trusses**A seal on this drawing or cover page listing this drawing, indicates acceptance of professional engineering responsibility solely for the design shown. The suitability and use of this drawing for any structure is the responsibility of the Building Designer per ANSI/TPI 1 Sec.2.**

For more information see this job's general notes page and these web sites: ALPINE: www.alpineitw.com; TPI: www.tpinst.org; SBCA: www.sbcindustry.com; ICC: www.iccsafe.org

ALPINE
AN ITW COMPANY
2400 Lake Orange Dr.
Suite 150
Orlando FL, 32837

Job Number: 16-0982 HUBBART RESIDENCE **Truss Label:** N01	Ply: 1 Qty: 1	SEQN: 468476 / T29 SPEC FROM: CDM Page 1 of 2	Cust: R215 JRef: 1VZZ2150001 DrwNo: 104.17.1308.00097 KM / DF 04/14/2017

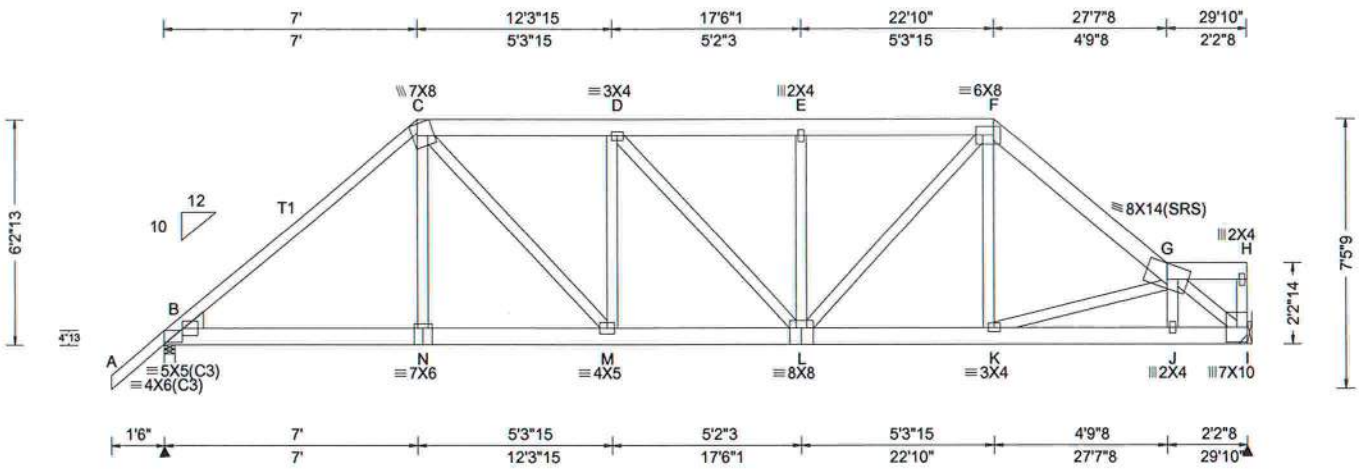

Loading Criteria (psf)

TCLL: 20.00
TCDL: 10.00
BCLL: 0.00
BCDL: 10.00
Des Ld: 40.00
NCBCLL: 10.00
Soffit: 2.00
Load Duration: 1.25
Spacing: 24.0 "

Wind Criteria

Wind Std: ASCE 7-10
Speed: 130 mph
Enclosure: Closed
Risk Category: II
EXP: C
Mean Height: 15.00 ft
TCDL: 5.0 psf
BCDL: 5.0 psf
MWFRS Parallel Dist: 0 to h/2
C&C Dist a: 3.00 ft
Loc. from endwall: not in 4.50 ft
GCpi: 0.18
Wind Duration: 1.60

Snow Criteria (Pg,Pf in PSF)

Pg: NA Ct: NA CAT: NA
Pf: NA Ce: NA
Lu: NA Cs: NA
Snow Duration: NA

Code / Misc Criteria

Bldg Code: FBC 2014 RES
TPI Std: 2007
Rep Factors Used: Yes
FT/RT:20(0)/10(0)
Plate Type(s):
WAVE

Defl/CSI Criteria

PP Deflection in	loc	L/defl	L/#
VERT(LL): 0.099	E	999	240
VERT(TL): 0.253	E	999	180
HORZ(LL): 0.039	I	-	-
HORZ(TL): 0.099	I	-	-

Creep Factor: 1.5
Max TC CSI: 0.403
Max BC CSI: 0.354
Max Web CSI: 0.408

VIEW Ver: 16.02.01B.0131.17

▲ Maximum Reactions (lbs)

Loc	R	/ U	/ Rw	/ Rh	/ RL	/ W
B	3099	/ 815	/ -	/ -	/ -	/ 3.5
I	3147	/ 778	/ -	/ -	/ -	/ -

Wind reactions based on MWFRS
B Min Brg Width Req = 2.6
I Min Brg Width Req = -
Bearing B is a rigid surface.

Members not listed have forces less than 375#

Maximum Top Chord Forces Per Ply (lbs)

Chords	Tens.	Comp.	Chords	Tens.	Comp.
B - C	1171	-4293	E - F	1151	-4265
C - D	1159	-4282	F - G	1117	-4235
D - E	1150	-4262			

Maximum Bot Chord Forces Per Ply (lbs)

Chords	Tens.	Comp.	Chords	Tens.	Comp.
B - N	3195	-860	L - K	3159	-837
N - M	3212	-862	K - J	3658	-923
M - L	4316	-1176	J - I	3672	-922

Maximum Web Forces Per Ply (lbs)

Webs	Tens.	Comp.	Webs	Tens.	Comp.
C - N	652	-100	L - F	1620	-459
C - M	1604	-445	F - K	734	-67
M - D	341	-692	K - G	91	-531
E - L	343	-666	G - I	1173	-4669

Lumber

Top chord 2x6 SP M-31 :T1 2x4 SP M-31:
Bot chord 2x6 SP M-31
Webs 2x4 SP M-31
:Lt Wedge 2x6 SP M-31:

Special Loads

------(Lumber Dur.Fac.=1.25 / Plate Dur.Fac.=1.25)

TC- From 66 plf at -1.50 to 66 plf at 7.00
TC- From 33 plf at 7.00 to 33 plf at 22.83
TC- From 33 plf at 22.83 to 33 plf at 27.63
TC- From 33 plf at 27.63 to 33 plf at 29.83
BC- From 5 plf at -1.50 to 5 plf at 0.00
BC- From 20 plf at 0.00 to 20 plf at 7.15
BC- From 10 plf at 7.15 to 10 plf at 17.51
BC- From 10 plf at 17.51 to 10 plf at 29.83
TC- 77 lb Conc. Load at 7.03
TC- 279 lb Conc. Load at 7.06
TC- 202 lb Conc. Load at 9.06,11.06,13.06,14.92 16.77,18.77,20.77,22.77
TC- 115 lb Conc. Load at 24.77
TC- 143 lb Conc. Load at 26.77
TC- 124 lb Conc. Load at 28.77
BC- 472 lb Conc. Load at 7.03
BC- 158 lb Conc. Load at 9.06,11.06,13.06,14.92 16.77,18.77,20.77,22.77
BC- 166 lb Conc. Load at 24.77
BC- 138 lb Conc. Load at 26.77
BC- 157 lb Conc. Load at 28.77

Purlins

In lieu of structural panels use purlins to brace all flat TC @ 24" oc.

Hangers / Ties

Recommended hanger connections are based on manufacturer tested capacities and calculations. Conditions may exist that require different connections than indicated. Refer to manufacturer publication for additional information.

Bearing at location x=29'7" uses the following support conditions:
Bearing I (29'7", 10') HUS28
Supporting Member: (1)2x8 SP M-31
(22) 0.162"x3.5" nails into supporting member,
(8) 0.162"x3.5" nails into supported member.

DOUGLAS FLEMING LICENSE No. 66648 STATE OF FLORIDA PROFESSIONAL ENGINEER

#0 278

04/14/2017

****WARNING**** READ AND FOLLOW ALL NOTES ON THIS DRAWING!
****IMPORTANT**** FURNISH THIS DRAWING TO ALL CONTRACTORS INCLUDING THE INSTALLERS

Trusses require extreme care in fabricating, handling, shipping, installing and bracing. Refer to and follow the latest edition of BCSI (Building Component Safety Information, by TPI and SBCA) for safety practices prior to performing these functions. Installers shall provide temporary bracing per BCSI. Unless noted otherwise,top chord shall have properly attached structural sheathing and bottom chord shall have a properly attached rigid ceiling. Locations shown for permanent lateral restraint of webs shall have bracing installed per BCSI sections B3, B7, or B10, as applicable. Apply plates to each face of truss and position as shown above and on the Joint Details, unless noted otherwise. Refer to drawings 160A-Z for standard plate positions.

Alpine, a division of ITW Building Components Group Inc. shall not be responsible for any deviation from this drawing,any failure to build the truss in conformance with ANSI/TPI 1, or for handling, shipping, installation and bracing of trusses**A seal on this drawing or cover page listing this drawing, indicates acceptance of professional engineering responsibility solely for the design shown. The suitability and use of this drawing for any structure is the responsibility of the Building Designer per ANSI/TPI 1 Sec.2.**

For more information see this job's general notes page and these web sites: ALPINE: www.alpineitw.com; TPI: www.tpinst.org; SBCA: www.sbcindustry.com; ICC: www.iccsafe.org

ALPINE AN ITW COMPANY
2400 Lake Orange Dr.
Suite 150
Orlando FL, 32837

Job Number: 16-0982 HUBBART RESIDENCE **Truss Label:** N01	Ply: 1 Qty: 1	SEQN: 468476 / T29 SPEC FROM: CDM Page 2 of 2	Cust: R215 JRef: 1VZZ2150001 DrwNo: 104.17.1308.00097 KM / DF 04/14/2017

Wind

Wind loads and reactions based on MWFRS.

Right end vertical not exposed to wind pressure.

DOUGLAS FLEMING
LICENSE
No. 66648
STATE OF
FLORIDA
PROFESSIONAL ENGINEER

#0 278

04/14/2017

****WARNING**** READ AND FOLLOW ALL NOTES ON THIS DRAWING!
****IMPORTANT**** FURNISH THIS DRAWING TO ALL CONTRACTORS INCLUDING THE INSTALLERS

Trusses require extreme care in fabricating, handling, shipping, installing and bracing. Refer to and follow the latest edition of BCSI (Building Component Safety Information, by TPI and SBCA) for safety practices prior to performing these functions. Installers shall provide temporary bracing per BCSI. Unless noted otherwise,top chord shall have properly attached structural sheathing and bottom chord shall have a properly attached rigid ceiling. Locations shown for permanent lateral restraint of webs shall have bracing installed per BCSI sections B3, B7, or B10, as applicable. Apply plates to each face of truss and position as shown above and on the Joint Details, unless noted otherwise. Refer to drawings 160A-Z for standard plate positions.

Alpine, a division of ITW Building Components Group Inc. shall not be responsible for any deviation from this drawing,any failure to build the truss in conformance with ANSI/TPI 1, or for handling, shipping, installation and bracing of trusses**A seal on this drawing or cover page listing this drawing, indicates acceptance of professional engineering responsibility solely for the design shown. The suitability and use of this drawing for any structure is the responsibility of the Building Designer per ANSI/TPI 1 Sec.2.**

For more information see this job's general notes page and these web sites: ALPINE: www.alpineitw.com; TPI: www.tpinst.org; SBCA: www.sbcindustry.com; ICC: www.iccsafe.org

ALPINE
AN ITW COMPANY
2400 Lake Orange Dr.
Suite 150
Orlando FL, 32837

Job Number: 16-0982 HUBBART RESIDENCE **Truss Label:** N02	Ply: 1 Qty: 1	SEQN: 468464 / T18 HIPS FROM: CDM	Cust: R215 JRef: 1VZZ2150001 DrwNo: 104.17.1308.02193 KM / DF 04/14/2017

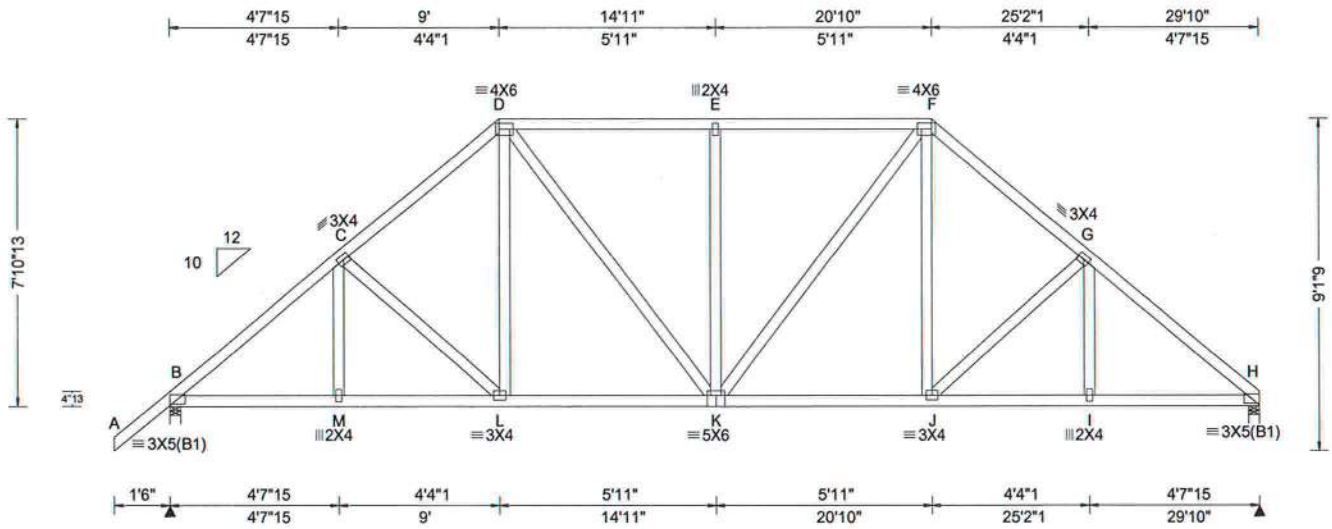

Loading Criteria (psf)

TCLL:	20.00
TCDL:	10.00
BCLL:	0.00
BCDL:	10.00
Des Ld:	40.00
NCBCLL:	10.00
Soffit:	2.00

Load Duration: 1.25
Spacing: 24.0 "

Wind Criteria
Wind Std: ASCE 7-10
Speed: 130 mph
Enclosure: Closed
Risk Category: II
EXP: C
Mean Height: 15.00 ft
TCDL: 5.0 psf
BCDL: 5.0 psf
MWFRS Parallel Dist: h/2 to h
C&C Dist a: 3.00 ft
Loc. from endwall: not in 9.00 ft
GCpi: 0.18
Wind Duration: 1.60

Snow Criteria (Pg,Pf in PSF)
Pg: NA Ct: NA CAT: NA
Pf: NA Ce: NA
Lu: NA Cs: NA
Snow Duration: NA

Code / Misc Criteria
Bldg Code: FBC 2014 RES
TPI Std: 2007
Rep Factors Used: Yes
FT/RT:20(0)/10(0)
Plate Type(s):
WAVE

Defl/CSI Criteria

PP Deflection in	loc	L/defl	L/#
VERT(LL): 0.041	E	999	240
VERT(TL): 0.110	E	999	180
HORZ(LL): 0.020	I	-	-
HORZ(TL): 0.054	I	-	-

Creep Factor: 1.5
Max TC CSI: 0.180
Max BC CSI: 0.214
Max Web CSI: 0.241

VIEW Ver: 16.02.01B.0131.17

▲ Maximum Reactions (lbs)

Loc	R	/ U	/ Rw	/ Rh	/ RL	/ W
B	1393	/ 225	/ 845	/ -	/ 271	/ 3.5
H	1280	/ 198	/ 747	/ -	/ -	/ 3.5

Wind reactions based on MWFRS
B Min Brg Width Req = 1.5
H Min Brg Width Req = 1.5
Bearings B & H are a rigid surface.

Members not listed have forces less than 375#

Maximum Top Chord Forces Per Ply (lbs)

Chords	Tens.	Comp.	Chords	Tens.	Comp.
B - C	377	- 1703	E - F	416	- 1263
C - D	411	- 1456	F - G	425	- 1465
D - E	416	- 1263	G - H	399	- 1723

Maximum Bot Chord Forces Per Ply (lbs)

Chords	Tens.	Comp.	Chords	Tens.	Comp.
B - M	1222	- 216	K - J	1058	- 123
M - L	1221	- 216	J - I	1244	- 223
L - K	1054	- 128	I - H	1245	- 222

Maximum Web Forces Per Ply (lbs)

Webs	Tens.	Comp.
E - K	152	- 411

Lumber
Top chord 2x4 SP M-31
Bot chord 2x4 SP M-31
Webs 2x4 SP M-31

Purlins
In lieu of structural panels use purlins to brace all flat TC @ 24" oc.

Wind
Wind loads based on MWFRS with additional C&C member design.

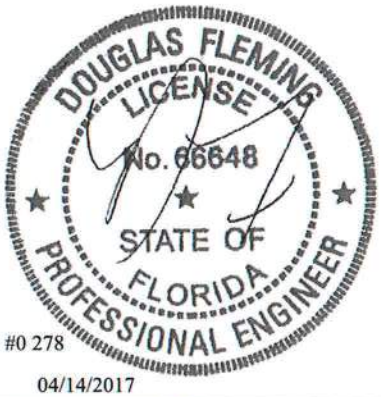

#0 278

04/14/2017

****WARNING**** READ AND FOLLOW ALL NOTES ON THIS DRAWING!
****IMPORTANT**** FURNISH THIS DRAWING TO ALL CONTRACTORS INCLUDING THE INSTALLERS

Trusses require extreme care in fabricating, handling, shipping, installing and bracing. Refer to and follow the latest edition of BCSI (Building Component Safety Information, by TPI and SBCA) for safety practices prior to performing these functions. Installers shall provide temporary bracing per BCSI. Unless noted otherwise,top chord shall have properly attached structural sheathing and bottom chord shall have a properly attached rigid ceiling. Locations shown for permanent lateral restraint of webs shall have bracing installed per BCSI sections B3, B7, or B10, as applicable. Apply plates to each face of truss and position as shown above and on the Joint Details, unless noted otherwise. Refer to drawings 160A-Z for standard plate positions.

Alpine, a division of ITW Building Components Group Inc. shall not be responsible for any deviation from this drawing,any failure to build the truss in conformance with ANSI/TPI 1, or for handling, shipping, installation and bracing of trusses**A seal on this drawing or cover page listing this drawing, indicates acceptance of professional engineering responsibility solely for the design shown. The suitability and use of this drawing for any structure is the responsibility of the Building Designer per ANSI/TPI 1 Sec.2.**

For more information see this job's general notes page and these web sites: ALPINE: www.alpineitw.com; TPI: www.tpinst.org; SBCA: www.sbcindustry.com; ICC: www.iccsafe.org

ALPINE AN ITW COMPANY
2400 Lake Orange Dr.
Suite 150
Orlando FL, 32837

Job Number: 16-0982 HUBBART RESIDENCE **Truss Label:** N03	Ply: 1 Qty: 1	SEQN: 468462 / T19 HIPS FROM: CDM	Cust: R215 JRef: 1VZZ2150001 DrwNo: 104.17.1308.03420 KM / DF 04/14/2017

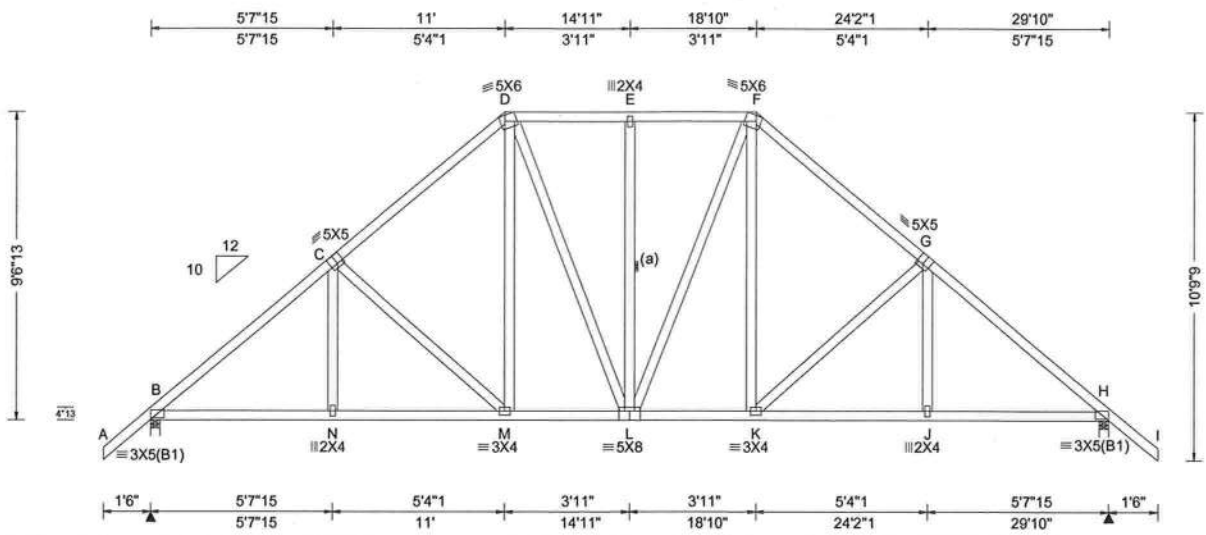

Loading Criteria (psf)

TCLL:	20.00
TCDL:	10.00
BCLL:	0.00
BCDL:	10.00
Des Ld:	40.00
NCBCLL:	10.00
Soffit:	2.00

Load Duration: 1.25
Spacing: 24.0 "

Wind Criteria
Wind Std: ASCE 7-10
Speed: 130 mph
Enclosure: Closed
Risk Category: II
EXP: C
Mean Height: 15.00 ft
TCDL: 5.0 psf
BCDL: 5.0 psf
MWFRS Parallel Dist: h/2 to h
C&C Dist a: 3.00 ft
Loc. from endwall: not in 9.00 ft
GCpi: 0.18
Wind Duration: 1.60

Snow Criteria (Pg,Pf in PSF)
Pg: NA Ct: NA CAT: NA
Pf: NA Ce: NA
Lu: NA Cs: NA
Snow Duration: NA

Code / Misc Criteria
Bldg Code: FBC 2014 RES
TPI Std: 2007
Rep Factors Used: Yes
FT/RT:20(0)/10(0)
Plate Type(s):
WAVE

Defl/CSI Criteria

PP Deflection in	loc	L/defl	L/#
VERT(LL): 0.037	E	999	240
VERT(TL): 0.098	E	999	180
HORZ(LL): 0.021	J	-	-
HORZ(TL): 0.055	J	-	-

Creep Factor: 1.5
Max TC CSI: 0.159
Max BC CSI: 0.196
Max Web CSI: 0.181

VIEW Ver: 16.02.01B.0131.17

▲ Maximum Reactions (lbs)

Loc	R	/ U	/ Rw	/ Rh	/ RL	/ W
B	1390	/ 217	/ 856	/ -	/ 345	/ 3.5
H	1390	/ 217	/ 856	/ -	/ -	/ 3.5

Wind reactions based on MWFRS
B Min Brg Width Req = 1.5
H Min Brg Width Req = 1.5
Bearings B & H are a rigid surface.

Members not listed have forces less than 375#

Maximum Top Chord Forces Per Ply (lbs)

Chords	Tens.	Comp.	Chords	Tens.	Comp.
B - C	353	-1691	E - F	365	-1011
C - D	392	-1354	F - G	392	-1354
D - E	365	-1011	G - H	352	-1691

Maximum Bot Chord Forces Per Ply (lbs)

Chords	Tens.	Comp.	Chords	Tens.	Comp.
B - N	1205	-158	L - K	950	-26
N - M	1204	-158	K - J	1204	-146
M - L	950	-99	J - H	1205	-146

Lumber
Top chord 2x4 SP M-31
Bot chord 2x4 SP M-31
Webs 2x4 SP M-31

Bracing
(a) Continuous lateral restraint equally spaced on member.

Purlins
In lieu of structural panels use purlins to brace all flat TC @ 24" oc.

Wind
Wind loads based on MWFRS with additional C&C member design.

DOUGLAS FLEMING
LICENSE
No. 66648
STATE OF
FLORIDA
PROFESSIONAL ENGINEER
#0 278

04/14/2017

****WARNING**** READ AND FOLLOW ALL NOTES ON THIS DRAWING!
****IMPORTANT**** FURNISH THIS DRAWING TO ALL CONTRACTORS INCLUDING THE INSTALLERS

Trusses require extreme care in fabricating, handling, shipping, installing and bracing. Refer to and follow the latest edition of BCSI (Building Component Safety Information, by TPI and SBCA) for safety practices prior to performing these functions. Installers shall provide temporary bracing per BCSI. Unless noted otherwise,top chord shall have properly attached structural sheathing and bottom chord shall have a properly attached rigid ceiling. Locations shown for permanent lateral restraint of webs shall have bracing installed per BCSI sections B3, B7, or B10, as applicable. Apply plates to each face of truss and position as shown above and on the Joint Details, unless noted otherwise. Refer to drawings 160A-Z for standard plate positions.

Alpine, a division of ITW Building Components Group Inc. shall not be responsible for any deviation from this drawing,any failure to build the truss in conformance with ANSI/TPI 1, or for handling, shipping, installation and bracing of trusses**A seal on this drawing or cover page listing this drawing, indicates acceptance of professional engineering responsibility solely for the design shown. The suitability and use of this drawing for any structure is the responsibility of the Building Designer per ANSI/TPI 1 Sec.2.**

For more information see this job's general notes page and these web sites: ALPINE: www.alpineitw.com; TPI: www.tpinst.org; SBCA: www.sbcindustry.com; ICC: www.iccsafe.org

ALPINE
AN ITW COMPANY
2400 Lake Orange Dr.
Suite 150
Orlando FL, 32837

Job Number: 16-0982 HUBBART RESIDENCE **Truss Label:** N04	Ply: 1 Qty: 1	SEQN: 468460 / T36 HIPS FROM: CDM	Cust: R215 JRef: 1VZZ2150001 DrwNo: 104.17.1308.05260 KM / DF 04/14/2017

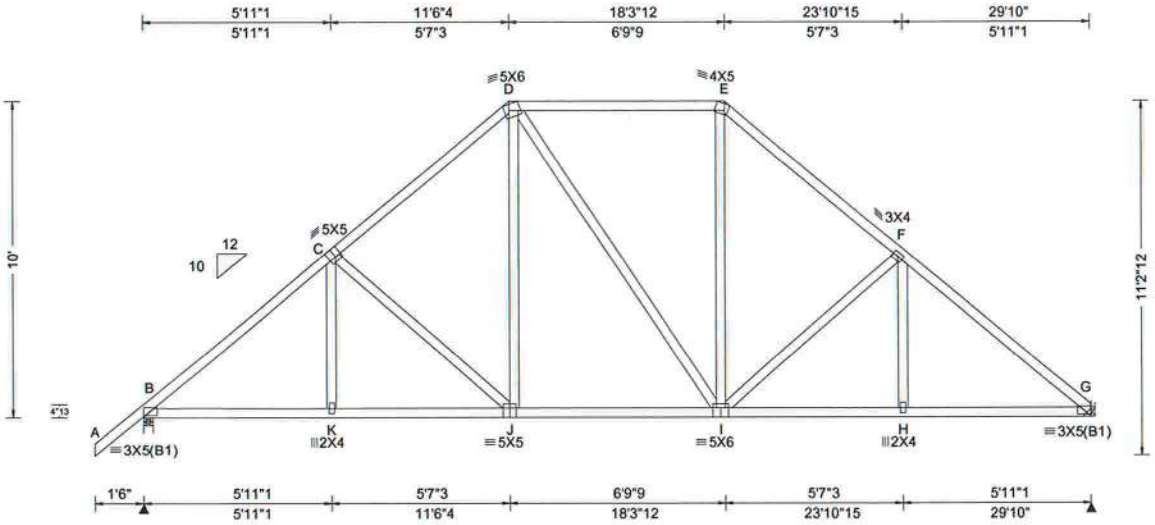

Loading Criteria (psf)

TCLL:	20.00
TCDL:	10.00
BCLL:	0.00
BCDL:	10.00
Des Ld:	40.00
NCBCLL:	10.00
Soffit:	2.00

Load Duration: 1.25
Spacing: 24.0 "

Wind Criteria
Wind Std: ASCE 7-10
Speed: 130 mph
Enclosure: Closed
Risk Category: II
EXP: C
Mean Height: 15.00 ft
TCDL: 5.0 psf
BCDL: 5.0 psf
MWFRS Parallel Dist: h/2 to h
C&C Dist a: 3.00 ft
Loc. from endwall: not in 9.00 ft
GCpi: 0.18
Wind Duration: 1.60

Snow Criteria (Pg,Pf in PSF)
Pg: NA Ct: NA CAT: NA
Pf: NA Ce: NA
Lu: NA Cs: NA
Snow Duration: NA

Code / Misc Criteria
Bldg Code: FBC 2014 RES
TPI Std: 2007
Rep Factors Used: Yes
FT/RT:20(0)/10(0)
Plate Type(s):
WAVE

Defl/CSI Criteria

PP Deflection in	loc	L/defl	L/#
VERT(LL): 0.035	J	999	240
VERT(TL): 0.095	J	999	180
HORZ(LL): 0.019	H	-	-
HORZ(TL): 0.052	H	-	-

Creep Factor: 1.5
Max TC CSI: 0.190
Max BC CSI: 0.213
Max Web CSI: 0.218

VIEW Ver: 16.02.01B.0131.17

▲ Maximum Reactions (lbs)

Loc	R	/ U	/ Rw	/ Rh	/ RL	/ W
B	1394	/ 217	/ 858	/ -	/ 334	/ 3.5
G	1279	/ 190	/ 759	/ -	/ -	/ -

Wind reactions based on MWFRS
B Min Brg Width Req = 1.5
G Min Brg Width Req = -
Bearing B is a rigid surface.

Members not listed have forces less than 375#

Maximum Top Chord Forces Per Ply (lbs)

Chords	Tens.	Comp.	Chords	Tens.	Comp.
B - C	354	-1689	E - F	401	-1338
C - D	390	-1337	F - G	377	-1709
D - E	358	-943			

Maximum Bot Chord Forces Per Ply (lbs)

Chords	Tens.	Comp.	Chords	Tens.	Comp.
B - K	1199	-181	I - H	1221	-187
K - J	1198	-181	H - G	1222	-187
J - I	940	-75			

Maximum Web Forces Per Ply (lbs)

Webs	Tens.	Comp.	Webs	Tens.	Comp.
D - J	435	-92	I - F	181	-378
I - E	440	-105			

Lumber
Top chord 2x4 SP M-31
Bot chord 2x4 SP M-31
Webs 2x4 SP M-31

Hangers / Ties
Recommended hanger connections are based on manufacturer tested capacities and calculations. Conditions may exist that require different connections than indicated. Refer to manufacturer publication for additional information.

Bearing at location x=29'7" uses the following support conditions:
Bearing G (29'7", 10') HUS26
Supporting Member: (1)2x6 SP M-31
(14) 0.148"x3" nails into supporting member,
(4) 0.148"x3" nails into supported member.

Purlins
In lieu of structural panels use purlins to brace all flat TC @ 24" oc.

Wind
Wind loads based on MWFRS with additional C&C member design.

DOUGLAS FLEMING
LICENSE
No. 66648
STATE OF
FLORIDA
PROFESSIONAL ENGINEER
#0 278

04/14/2017

****WARNING**** READ AND FOLLOW ALL NOTES ON THIS DRAWING!
****IMPORTANT**** FURNISH THIS DRAWING TO ALL CONTRACTORS INCLUDING THE INSTALLERS

Trusses require extreme care in fabricating, handling, shipping, installing and bracing. Refer to and follow the latest edition of BCSI (Building Component Safety Information, by TPI and SBCA) for safety practices prior to performing these functions. Installers shall provide temporary bracing per BCSI. Unless noted otherwise,top chord shall have properly attached structural sheathing and bottom chord shall have a properly attached rigid ceiling. Locations shown for permanent lateral restraint of webs shall have bracing installed per BCSI sections B3, B7, or B10, as applicable. Apply plates to each face of truss and position as shown above and on the Joint Details, unless noted otherwise. Refer to drawings 160A-Z for standard plate positions.

Alpine, a division of ITW Building Components Group Inc. shall not be responsible for any deviation from this drawing,any failure to build the truss in conformance with ANSI/TPI 1, or for handling, shipping, installation and bracing of trusses**A seal on this drawing or cover page listing this drawing, indicates acceptance of professional engineering responsibility solely for the design shown. The suitability and use of this drawing for any structure is the responsibility of the Building Designer per ANSI/TPI 1 Sec.2.**

For more information see this job's general notes page and these web sites: ALPINE: www.alpineitw.com; TPI: www.tpinst.org; SBCA: www.sbcindustry.com; ICC: www.iccsafe.org

ALPINE
AN ITW COMPANY
2400 Lake Orange Dr.
Suite 150
Orlando FL, 32837

Job Number: 16-0982 HUBBART RESIDENCE **Truss Label:** N05	Ply: 1 Qty: 1	SEQN: 468484 / T25 SPEC FROM: CDM	Cust: R215 JRef: 1VZZ2150001 DrwNo: 104.17.1308.06777 KM / DF 04/14/2017

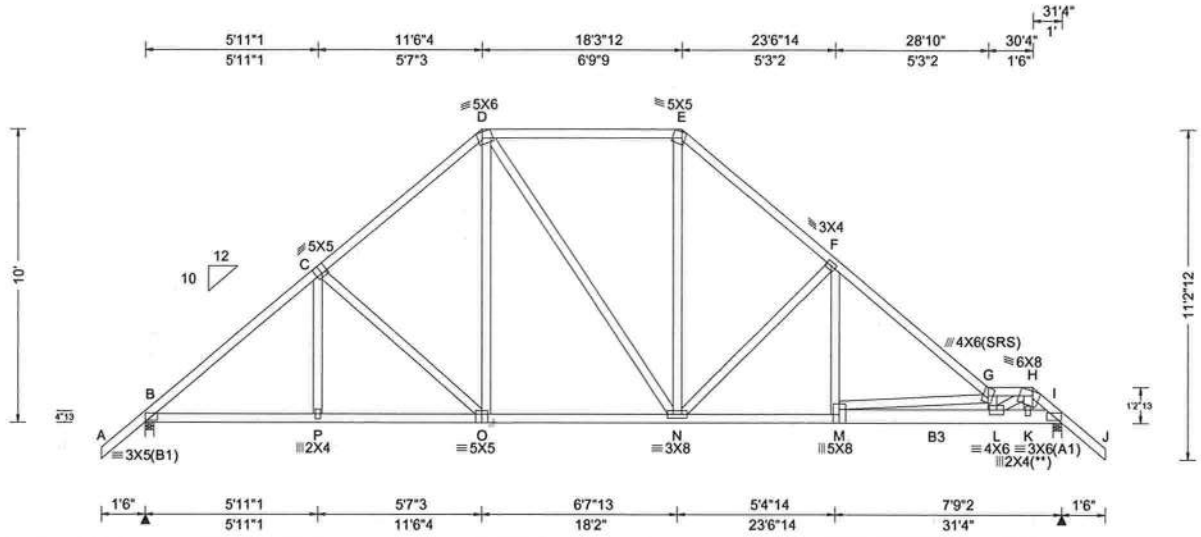

Loading Criteria (psf)

TCLL:	20.00
TCDL:	10.00
BCLL:	0.00
BCDL:	10.00
Des Ld:	40.00
NCBCLL:	10.00
Soffit:	2.00

Load Duration: 1.25
Spacing: 24.0 "

Wind Criteria
Wind Std: ASCE 7-10
Speed: 130 mph
Enclosure: Closed
Risk Category: II
EXP: C
Mean Height: 15.00 ft
TCDL: 5.0 psf
BCDL: 5.0 psf
MWFRS Parallel Dist: 0 to h/2
C&C Dist a: 3.13 ft
Loc. from endwall: not in 9.00 ft
GCpi: 0.18
Wind Duration: 1.60

Snow Criteria (Pg,Pf in PSF)
Pg: NA Ct: NA CAT: NA
Pf: NA Ce: NA
Lu: NA Cs: NA
Snow Duration: NA

Code / Misc Criteria
Bldg Code: FBC 2014 RES
TPI Std: 2007
Rep Factors Used: Yes
FT/RT:20(0)/10(0)
Plate Type(s):
WAVE

Defl/CSI Criteria

PP Deflection in	loc	L/defl	L/#
VERT(LL): 0.069	M	999	240
VERT(TL): 0.179	M	999	180
HORZ(LL): 0.027	D	-	-
HORZ(TL): 0.071	D	-	-

Creep Factor: 1.5
Max TC CSI: 0.229
Max BC CSI: 0.365
Max Web CSI: 0.587

VIEW Ver: 16.02.01B.0131.17

▲ Maximum Reactions (lbs)

Loc	R	/ U	/ Rw	/ Rh	/ RL	/ W
B	1471	/ 288	/ -	/ -	/ -	/ 3.5
I	1800	/ 538	/ -	/ -	/ -	/ 3.5

Wind reactions based on MWFRS
B Min Brg Width Req = 1.5
I Min Brg Width Req = 1.5
Bearings B & I are a rigid surface.

Members not listed have forces less than 375#

Maximum Top Chord Forces Per Ply (lbs)

Chords	Tens.	Comp.	Chords	Tens.	Comp.
B - C	350	- 1803	F - G	433	- 2132
C - D	290	- 1454	G - H	688	- 3104
D - E	201	- 1084	H - I	589	- 2083
E - F	303	- 1512			

Maximum Bot Chord Forces Per Ply (lbs)

Chords	Tens.	Comp.	Chords	Tens.	Comp.
B - P	1286	- 232	M - L	3516	- 782
P - O	1285	- 233	L - K	1556	- 430
O - N	1030	- 189	K - I	1491	- 418
N - M	1550	- 302			

Maximum Web Forces Per Ply (lbs)

Webs	Tens.	Comp.	Webs	Tens.	Comp.
D - O	433	0	M - G	485	- 1976
N - E	521	- 15	G - L	286	- 1255
N - F	143	- 669	L - H	1883	- 313
F - M	500	- 45	K - H	380	- 72

Lumber

Top chord 2x4 SP M-31
Bot chord 2x4 SP M-31 :B3 2x6 SP M-31:
Webs 2x4 SP M-31

Special Loads

-----(Lumber Dur.Fac.=1.25 / Plate Dur.Fac.=1.25)

TC- From	66 plf at	-1.50 to	66 plf at	5.88
TC- From	66 plf at	5.88 to	66 plf at	11.52
TC- From	66 plf at	11.52 to	66 plf at	18.31
TC- From	66 plf at	18.31 to	66 plf at	28.83
TC- From	66 plf at	28.83 to	66 plf at	30.33
TC- From	66 plf at	30.33 to	66 plf at	32.83
BC- From	5 plf at	-1.50 to	5 plf at	0.00
BC- From	20 plf at	0.00 to	20 plf at	11.52
BC- From	20 plf at	11.52 to	20 plf at	23.72
BC- From	20 plf at	23.72 to	20 plf at	29.90
BC- From	10 plf at	29.90 to	10 plf at	31.33
BC- From	5 plf at	31.33 to	5 plf at	32.83

TC- -52 lb Conc. Load at 30.29
BC- 410 lb Conc. Load at 29.90
BC- 17 lb Conc. Load at 30.29

Plating Notes

(**) 1 plate(s) require special positioning. Refer to scaled plate plot details for special positioning requirements.

Purlins

In lieu of structural panels use purlins to brace all flat TC @ 24" oc.

Wind

Wind loads and reactions based on MWFRS.

DOUGLAS FLEMING
LICENSE
No. 66648
STATE OF
FLORIDA
PROFESSIONAL ENGINEER
#0 278

04/14/2017

****WARNING**** READ AND FOLLOW ALL NOTES ON THIS DRAWING!
****IMPORTANT**** FURNISH THIS DRAWING TO ALL CONTRACTORS INCLUDING THE INSTALLERS

Trusses require extreme care in fabricating, handling, shipping, installing and bracing. Refer to and follow the latest edition of BCSI (Building Component Safety Information, by TPI and SBCA) for safety practices prior to performing these functions. Installers shall provide temporary bracing per BCSI. Unless noted otherwise,top chord shall have properly attached structural sheathing and bottom chord shall have a properly attached rigid ceiling. Locations shown for permanent lateral restraint of webs shall have bracing installed per BCSI sections B3, B7, or B10, as applicable. Apply plates to each face of truss and position as shown above and on the Joint Details, unless noted otherwise. Refer to drawings 160A-Z for standard plate positions.

Alpine, a division of ITW Building Components Group Inc. shall not be responsible for any deviation from this drawing,any failure to build the truss in conformance with ANSI/TPI 1, or for handling, shipping, installation and bracing of trusses**A seal on this drawing or cover page listing this drawing, indicates acceptance of professional engineering responsibility solely for the design shown. The suitability and use of this drawing for any structure is the responsibility of the Building Designer per ANSI/TPI 1 Sec.2.**

For more information see this job's general notes page and these web sites: ALPINE: www.alpineitw.com; TPI: www.tpinst.org; SBCA: www.sbcindustry.com; ICC: www.iccsafe.org

ALPINE
AN ITW COMPANY
2400 Lake Orange Dr.
Suite 150
Orlando FL, 32837

Job Number: 16-0982 HUBBART RESIDENCE **Truss Label:** N06	Ply: 1 Qty: 1	SEQN: 468456 / T23 SPEC FROM: CDM	Cust: R215 JRef: 1VZZ2150001 DrwNo: 104.17.1308.08197 KM / DF 04/14/2017

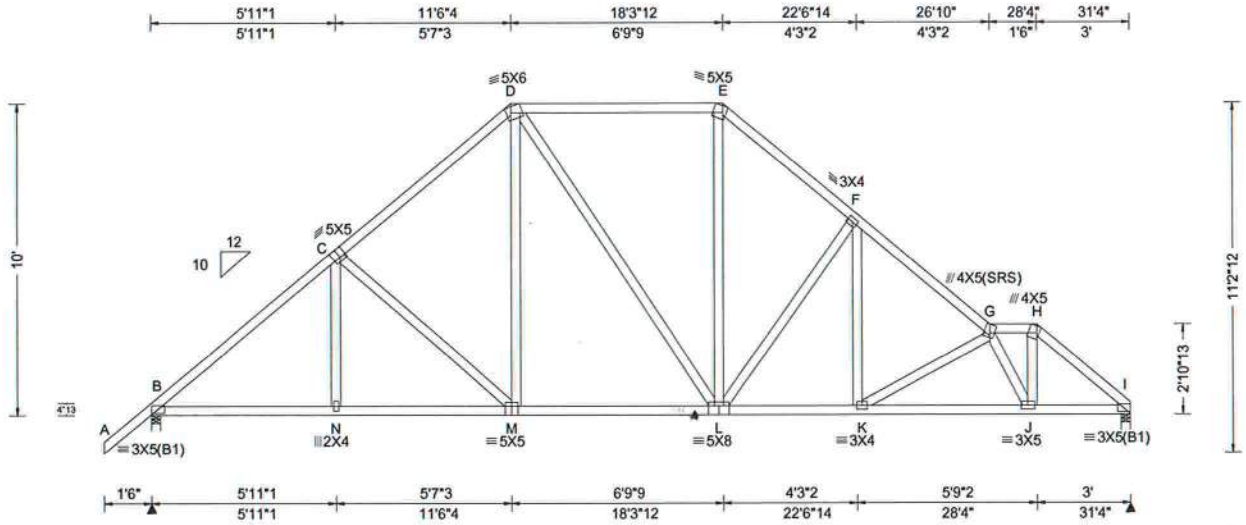

Loading Criteria (psf)

TCLL:	20.00
TCDL:	10.00
BCLL:	0.00
BCDL:	10.00
Des Ld:	40.00
NCBCLL:	10.00
Soffit:	2.00

Load Duration: 1.25
Spacing: 24.0 "

Wind Criteria
Wind Std: ASCE 7-10
Speed: 130 mph
Enclosure: Closed
Risk Category: II
EXP: C
Mean Height: 15.00 ft
TCDL: 5.0 psf
BCDL: 5.0 psf
MWFRS Parallel Dist: h to 2h
C&C Dist a: 3.13 ft
Loc. from endwall: not in 9.00 ft
GCpi: 0.18
Wind Duration: 1.60

Snow Criteria (Pg,Pf in PSF)
Pg: NA Ct: NA CAT: NA
Pf: NA Ce: NA
Lu: NA Cs: NA
Snow Duration: NA

Code / Misc Criteria
Bldg Code: FBC 2014 RES
TPI Std: 2007
Rep Factors Used: Yes
FT/RT:20(0)/10(0)
Plate Type(s):
WAVE

Defl/CSI Criteria

PP Deflection in	loc	L/defl	L/#
VERT(LL): 0.050	K	999	240
VERT(TL): 0.134	K	999	180
HORZ(LL): 0.024	J	-	-
HORZ(TL): 0.066	J	-	-

Creep Factor: 1.5
Max TC CSI: 0.205
Max BC CSI: 0.224
Max Web CSI: 0.313

VIEW Ver: 16.02.01B.0131.17

▲ Maximum Reactions (lbs)

Loc	R	/ U	/ Rw	/ Rh	/ RL	/ W
B	1458	/ 8	/ 893	/ -	/ 334	/ 3.5
I	1345	/ 4	/ 787	/ -	/ -	/ 3.5

Wind reactions based on MWFRS
B Min Brg Width Req = 1.5
I Min Brg Width Req = 1.5
Bearings B & I are a rigid surface.

Members not listed have forces less than 375#

Maximum Top Chord Forces Per Ply (lbs)

Chords	Tens.	Comp.	Chords	Tens.	Comp.
B - C	388	- 1784	F - G	487	- 1880
C - D	423	- 1435	G - H	386	- 1451
D - E	397	- 1058	H - I	429	- 1829
E - F	463	- 1448			

Maximum Bot Chord Forces Per Ply (lbs)

Chords	Tens.	Comp.	Chords	Tens.	Comp.
B - N	1271	- 190	L - K	1369	- 205
N - M	1270	- 191	K - J	1925	- 414
M - L	1015	- 68	J - I	1332	- 269

Maximum Web Forces Per Ply (lbs)

Webs	Tens.	Comp.	Webs	Tens.	Comp.
D - M	437	- 91	K - G	242	- 640
L - E	527	- 157	G - J	282	- 1120
L - F	228	- 552	J - H	1061	- 234
F - K	445	- 115			

Lumber
Top chord 2x4 SP M-31
Bot chord 2x4 SP M-31
Webs 2x4 SP M-31

Purlins
In lieu of structural panels use purlins to brace all flat TC @ 24" oc.

Wind
Wind loads based on MWFRS with additional C&C member design.

DOUGLAS FLEMING
LICENSE
No. 66648
STATE OF
FLORIDA
PROFESSIONAL ENGINEER

#0 278
04/14/2017

****WARNING**** READ AND FOLLOW ALL NOTES ON THIS DRAWING!
****IMPORTANT**** FURNISH THIS DRAWING TO ALL CONTRACTORS INCLUDING THE INSTALLERS

Trusses require extreme care in fabricating, handling, shipping, installing and bracing. Refer to and follow the latest edition of BCSI (Building Component Safety Information, by TPI and SBCA) for safety practices prior to performing these functions. Installers shall provide temporary bracing per BCSI. Unless noted otherwise,top chord shall have properly attached structural sheathing and bottom chord shall have a properly attached rigid ceiling. Locations shown for permanent lateral restraint of webs shall have bracing installed per BCSI sections B3, B7, or B10, as applicable. Apply plates to each face of truss and position as shown above and on the Joint Details, unless noted otherwise. Refer to drawings 160A-Z for standard plate positions.

Alpine, a division of ITW Building Components Group Inc. shall not be responsible for any deviation from this drawing,any failure to build the truss in conformance with ANSI/TPI 1, or for handling, shipping, installation and bracing of trusses**A seal on this drawing or cover page listing this drawing, indicates acceptance of professional engineering responsibility solely for the design shown. The suitability and use of this drawing for any structure is the responsibility of the Building Designer per ANSI/TPI 1 Sec.2.**

For more information see this job's general notes page and these web sites: ALPINE: www.alpineitw.com; TPI: www.tpinst.org; SBCA: www.sbcindustry.com; ICC: www.iccsafe.org

ALPINE
AN ITW COMPANY
2400 Lake Orange Dr.
Suite 150
Orlando FL, 32837

Job Number: 16-0982 HUBBART RESIDENCE **Truss Label:** N07	Ply: 1 Qty: 1	SEQN: 468454 / T41 SPEC FROM: CDM	Cust: R215 JRef: 1VZZ2150001 DrwNo: 104.17.1308.09393 KM / DF 04/14/2017

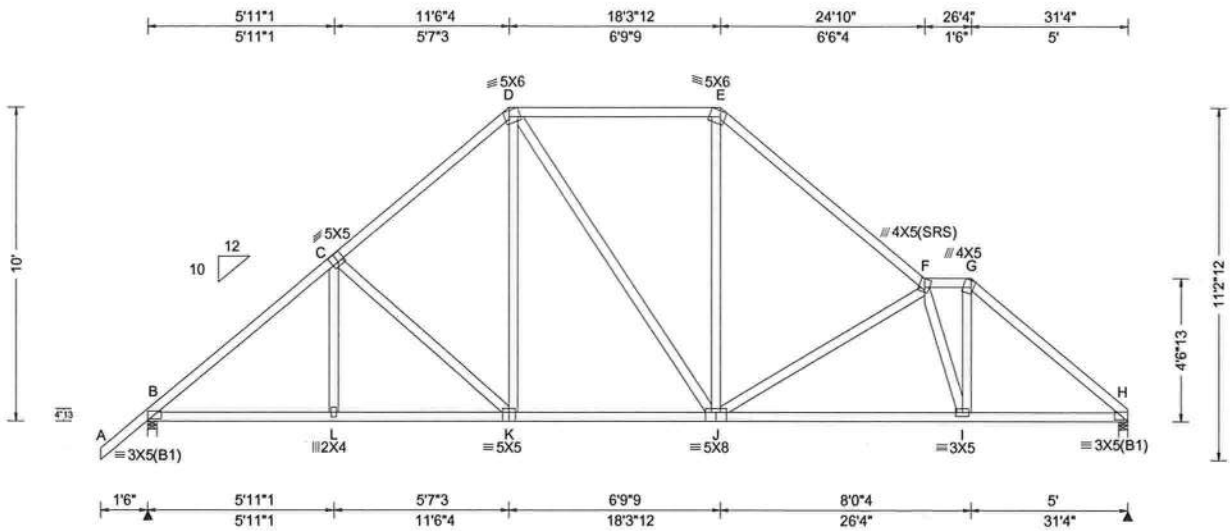

Loading Criteria (psf)

TCLL:	20.00
TCDL:	10.00
BCLL:	0.00
BCDL:	10.00
Des Ld:	40.00
NCBCLL:	10.00
Soffit:	2.00

Load Duration: 1.25
Spacing: 24.0 "

Wind Criteria
Wind Std: ASCE 7-10
Speed: 130 mph
Enclosure: Closed
Risk Category: II
EXP: C
Mean Height: 15.00 ft
TCDL: 5.0 psf
BCDL: 5.0 psf
MWFRS Parallel Dist: h to 2h
C&C Dist a: 3.13 ft
Loc. from endwall: not in 9.00 ft
GCpi: 0.18
Wind Duration: 1.60

Snow Criteria (Pg,Pf in PSF)
Pg: NA Ct: NA CAT: NA
Pf: NA Ce: NA
Lu: NA Cs: NA
Snow Duration: NA

Code / Misc Criteria
Bldg Code: FBC 2014 RES
TPI Std: 2007
Rep Factors Used: Yes
FT/RT:20(0)/10(0)
Plate Type(s):
WAVE

Defl/CSI Criteria

PP Deflection in	loc	L/defl	L/#
VERT(LL): 0.045	J	999	240
VERT(TL): 0.123	J	999	180
HORZ(LL): 0.023	I	-	-
HORZ(TL): 0.063	I	-	-

Creep Factor: 1.5
Max TC CSI: 0.204
Max BC CSI: 0.300
Max Web CSI: 0.408

VIEW Ver: 16.02.01B.0131.17

▲ Maximum Reactions (lbs)

Loc	R	/ U	/ Rw	/ Rh	/ RL	/ W
B	1458	/ 9	/ 894	/ -	/ 334	/ 3.5
H	1345	/ 4	/ 789	/ -	/ -	/ 3.5

Wind reactions based on MWFRS
B Min Brg Width Req = 1.5
H Min Brg Width Req = 1.5
Bearings B & H are a rigid surface.

Members not listed have forces less than 375#

Maximum Top Chord Forces Per Ply (lbs)

Chords	Tens.	Comp.	Chords	Tens.	Comp.
B - C	394	- 1785	E - F	444	- 1512
C - D	429	- 1433	F - G	394	- 1374
D - E	410	- 1070	G - H	427	- 1820

Maximum Bot Chord Forces Per Ply (lbs)

Chords	Tens.	Comp.	Chords	Tens.	Comp.
B - L	1273	- 194	J - I	1610	- 321
L - K	1272	- 194	I - H	1308	- 236
K - J	1012	- 70			

Maximum Web Forces Per Ply (lbs)

Webs	Tens.	Comp.	Webs	Tens.	Comp.
D - K	421	- 95	F - I	253	- 864
J - E	497	- 100	I - G	955	- 224
J - F	279	- 647			

Lumber
Top chord 2x4 SP M-31
Bot chord 2x4 SP M-31
Webs 2x4 SP M-31

Purlins
In lieu of structural panels use purlins to brace all flat TC @ 24" oc.

Wind
Wind loads based on MWFRS with additional C&C member design.

DOUGLAS FLEMING
LICENSE
No. 66648
STATE OF
FLORIDA
PROFESSIONAL ENGINEER

#0 278
04/14/2017

****WARNING**** READ AND FOLLOW ALL NOTES ON THIS DRAWING!
****IMPORTANT**** FURNISH THIS DRAWING TO ALL CONTRACTORS INCLUDING THE INSTALLERS

Trusses require extreme care in fabricating, handling, shipping, installing and bracing. Refer to and follow the latest edition of BCSI (Building Component Safety Information, by TPI and SBCA) for safety practices prior to performing these functions. Installers shall provide temporary bracing per BCSI. Unless noted otherwise,top chord shall have properly attached structural sheathing and bottom chord shall have a properly attached rigid ceiling. Locations shown for permanent lateral restraint of webs shall have bracing installed per BCSI sections B3, B7, or B10, as applicable. Apply plates to each face of truss and position as shown above and on the Joint Details, unless noted otherwise. Refer to drawings 160A-Z for standard plate positions.

Alpine, a division of ITW Building Components Group Inc. shall not be responsible for any deviation from this drawing,any failure to build the truss in conformance with ANSI/TPI 1, or for handling, shipping, installation and bracing of trusses**A seal on this drawing or cover page listing this drawing, indicates acceptance of professional engineering responsibility solely for the design shown. The suitability and use of this drawing for any structure is the responsibility of the Building Designer per ANSI/TPI 1 Sec.2.**

For more information see this job's general notes page and these web sites: ALPINE: www.alpineitw.com; TPI: www.tpinst.org; SBCA: www.sbcindustry.com; ICC: www.iccsafe.org

ALPINE
AN ITW COMPANY
2400 Lake Orange Dr.
Suite 150
Orlando FL, 32837

Job Number: 16-0982 HUBBART RESIDENCE **Truss Label:** N08	Ply: 1 Qty: 1	SEQN: 468452 / T28 SPEC FROM: CDM	Cust: R215 JRef: 1VZZ2150001 DrwNo: 104.17.1308.10607 KM / DF 04/14/2017

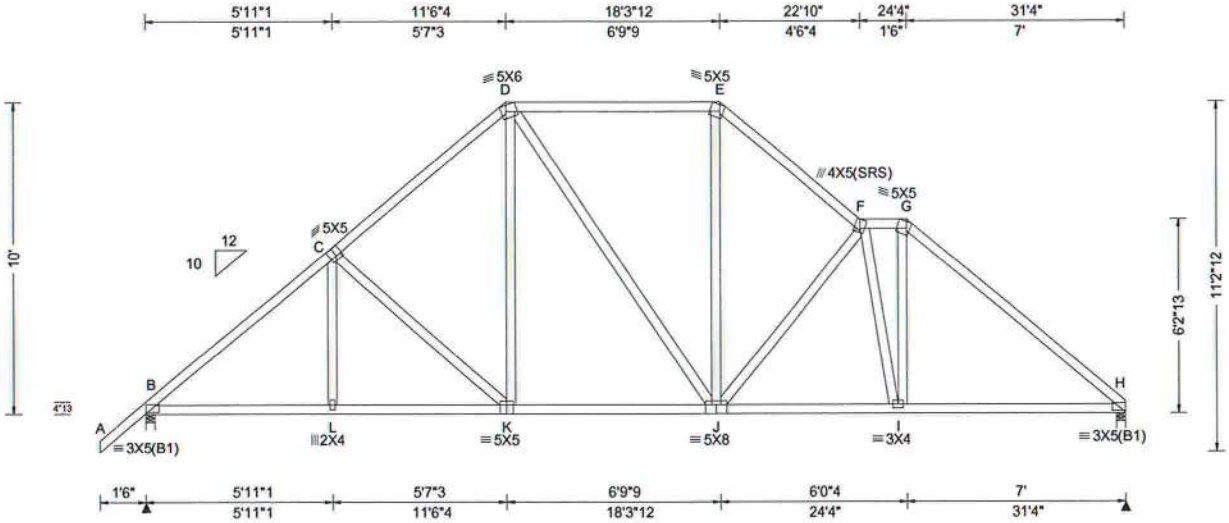

Loading Criteria (psf)

TCLL:	20.00
TCDL:	10.00
BCLL:	0.00
BCDL:	10.00
Des Ld:	40.00
NCBCLL:	10.00
Soffit:	2.00

Load Duration: 1.25
Spacing: 24.0 "

Wind Criteria
Wind Std: ASCE 7-10
Speed: 130 mph
Enclosure: Closed
Risk Category: II
EXP: C
Mean Height: 15.00 ft
TCDL: 5.0 psf
BCDL: 5.0 psf
MWFRS Parallel Dist: h to 2h
C&C Dist a: 3.13 ft
Loc. from endwall: not in 9.00 ft
GCpi: 0.18
Wind Duration: 1.60

Snow Criteria (Pg,Pf in PSF)
Pg: NA Ct: NA CAT: NA
Pf: NA Ce: NA
Lu: NA Cs: NA
Snow Duration: NA

Code / Misc Criteria
Bldg Code: FBC 2014 RES
TPI Std: 2007
Rep Factors Used: Yes
FT/RT:20(0)/10(0)
Plate Type(s):
WAVE

Defl/CSI Criteria

PP Deflection in	loc	L/defl	L/#
VERT(LL): 0.041	J	999	240
VERT(TL): 0.110	J	999	180
HORZ(LL): 0.022	I	-	-
HORZ(TL): 0.058	I	-	-

Creep Factor: 1.5
Max TC CSI: 0.225
Max BC CSI: 0.243
Max Web CSI: 0.296

VIEW Ver: 16.02.01B.0131.17

▲ Maximum Reactions (lbs)

Loc	R	/ U	/ Rw	/ Rh	/ RL	/ W
B	1458	/ 9	/ 895	/ -	/ 334	/ 3.5
H	1345	/ 4	/ 791	/ -	/ -	/ 3.5

Wind reactions based on MWFRS
B Min Brg Width Req = 1.5
H Min Brg Width Req = 1.5
Bearings B & H are a rigid surface.

Members not listed have forces less than 375#

Maximum Top Chord Forces Per Ply (lbs)

Chords	Tens.	Comp.	Chords	Tens.	Comp.
B - C	399	-1784	E - F	463	-1442
C - D	435	-1435	F - G	400	-1276
D - E	413	-1060	G - H	424	-1764

Maximum Bot Chord Forces Per Ply (lbs)

Chords	Tens.	Comp.	Chords	Tens.	Comp.
B - L	1272	-198	J - I	1378	-230
L - K	1271	-198	I - H	1245	-203
K - J	1015	-75			

Maximum Web Forces Per Ply (lbs)

Webs	Tens.	Comp.	Webs	Tens.	Comp.
D - K	436	-93	F - I	107	-510
J - E	509	-133	I - G	641	-97
J - F	231	-525			

Lumber
Top chord 2x4 SP M-31
Bot chord 2x4 SP M-31
Webs 2x4 SP M-31

Purlins
In lieu of structural panels use purlins to brace all flat TC @ 24" oc.

Wind
Wind loads based on MWFRS with additional C&C member design.

#0 278
04/14/2017

****WARNING**** READ AND FOLLOW ALL NOTES ON THIS DRAWING!
****IMPORTANT**** FURNISH THIS DRAWING TO ALL CONTRACTORS INCLUDING THE INSTALLERS

Trusses require extreme care in fabricating, handling, shipping, installing and bracing. Refer to and follow the latest edition of BCSI (Building Component Safety Information, by TPI and SBCA) for safety practices prior to performing these functions. Installers shall provide temporary bracing per BCSI. Unless noted otherwise,top chord shall have properly attached structural sheathing and bottom chord shall have a properly attached rigid ceiling. Locations shown for permanent lateral restraint of webs shall have bracing installed per BCSI sections B3, B7, or B10, as applicable. Apply plates to each face of truss and position as shown above and on the Joint Details, unless noted otherwise. Refer to drawings 160A-Z for standard plate positions.

Alpine, a division of ITW Building Components Group Inc. shall not be responsible for any deviation from this drawing,any failure to build the truss in conformance with ANSI/TPI 1, or for handling, shipping, installation and bracing of trusses**A seal on this drawing or cover page listing this drawing, indicates acceptance of professional engineering responsibility solely for the design shown. The suitability and use of this drawing for any structure is the responsibility of the Building Designer per ANSI/TPI 1 Sec.2.**

For more information see this job's general notes page and these web sites: ALPINE: www.alpineitw.com; TPI: www.tpinst.org; SBCA: www.sbcindustry.com; ICC: www.iccsafe.org

ALPINE
AN ITW COMPANY
2400 Lake Orange Dr.
Suite 150
Orlando FL, 32837

Job Number: 16-0982 HUBBART RESIDENCE **Truss Label:** N09	Ply: 1 Qty: 1	SEQN: 468450 / T22 SPEC FROM: CDM	Cust: R215 JRef: 1VZZ2150001 DrwNo: 104.17.1308.12450 KM / DF 04/14/2017

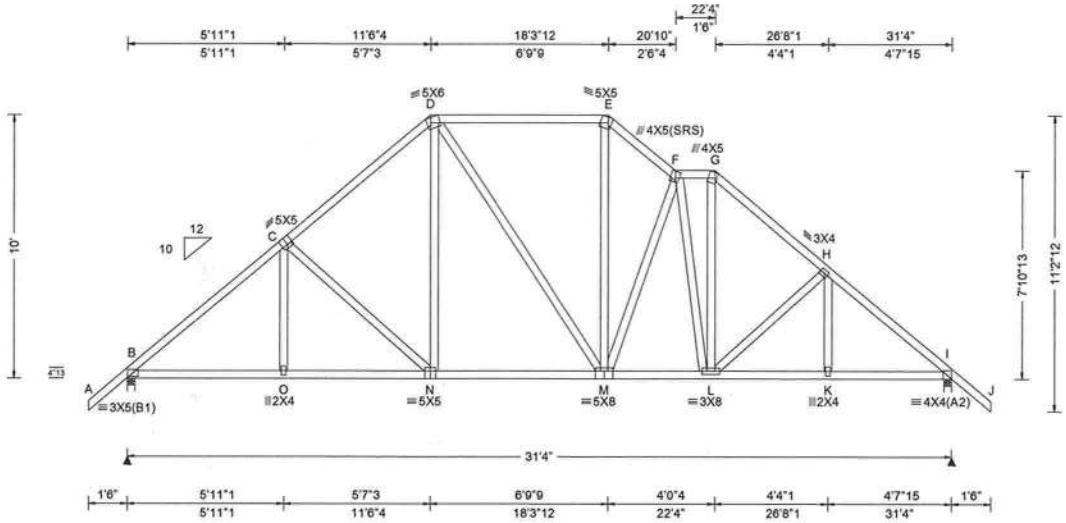

Loading Criteria (psf)

TCLL:	20.00
TCDL:	10.00
BCLL:	0.00
BCDL:	10.00
Des Ld:	40.00
NCBCLL:	10.00
Soffit:	2.00

Load Duration: 1.25
Spacing: 24.0 "

Wind Criteria
Wind Std: ASCE 7-10
Speed: 130 mph
Enclosure: Closed
Risk Category: II
EXP: C
Mean Height: 15.00 ft
TCDL: 5.0 psf
BCDL: 5.0 psf
MWFRS Parallel Dist: h to 2h
C&C Dist a: 3.13 ft
Loc. from endwall: not in 9.00 ft
GCpi: 0.18
Wind Duration: 1.60

Snow Criteria (Pg,Pf in PSF)
Pg: NA Ct: NA CAT: NA
Pf: NA Ce: NA
Lu: NA Cs: NA
Snow Duration: NA

Code / Misc Criteria
Bldg Code: FBC 2014 RES
TPI Std: 2007
Rep Factors Used: Yes
FT/RT:20(0)/10(0)
Plate Type(s):
WAVE

Defl/CSI Criteria

PP Deflection in	loc	L/defl	L/#
VERT(LL): 0.044	F	999	240
VERT(TL): 0.117	F	999	180
HORZ(LL): 0.024	K	-	-
HORZ(TL): 0.064	K	-	-

Creep Factor: 1.5
Max TC CSI: 0.199
Max BC CSI: 0.227
Max Web CSI: 0.291

VIEW Ver: 16.02.01B.0131.17

▲ Maximum Reactions (lbs)

Loc	R	/ U	/ Rw	/ Rh	/ RL	/ W
B	1455	/ 10	/ 895	/ -	/ 359	/ 3.5
I	1455	/ 13	/ 892	/ -	/ -	/ 3.5

Wind reactions based on MWFRS
B Min Brg Width Req = 1.5
I Min Brg Width Req = 1.5
Bearings B & I are a rigid surface.

Members not listed have forces less than 375#

Maximum Top Chord Forces Per Ply (lbs)

Chords	Tens.	Comp.	Chords	Tens.	Comp.
B - C	393	- 1780	F - G	380	- 1125
C - D	427	- 1430	G - H	426	- 1540
D - E	402	- 1053	H - I	394	- 1798
E - F	460	- 1357			

Maximum Bot Chord Forces Per Ply (lbs)

Chords	Tens.	Comp.	Chords	Tens.	Comp.
B - O	1268	- 162	M - L	1196	- 113
O - N	1267	- 162	L - K	1294	- 192
N - M	1012	- 98	K - I	1295	- 192

Maximum Web Forces Per Ply (lbs)

Webs	Tens.	Comp.	Webs	Tens.	Comp.
D - N	438	- 92	F - L	112	- 404
M - E	507	- 154	L - G	650	- 171
M - F	216	- 454			

Lumber
Top chord 2x4 SP M-31
Bot chord 2x4 SP M-31
Webs 2x4 SP M-31

Purlins
In lieu of structural panels use purlins to brace all flat TC @ 24" oc.

Wind
Wind loads based on MWFRS with additional C&C member design.

DOUGLAS FLEMING
LICENSE
No. 66648
STATE OF
FLORIDA
PROFESSIONAL ENGINEER

#0 278
04/14/2017

****WARNING**** READ AND FOLLOW ALL NOTES ON THIS DRAWING!
****IMPORTANT**** FURNISH THIS DRAWING TO ALL CONTRACTORS INCLUDING THE INSTALLERS

Trusses require extreme care in fabricating, handling, shipping, installing and bracing. Refer to and follow the latest edition of BCSI (Building Component Safety Information, by TPI and SBCA) for safety practices prior to performing these functions. Installers shall provide temporary bracing per BCSI. Unless noted otherwise,top chord shall have properly attached structural sheathing and bottom chord shall have a properly attached rigid ceiling. Locations shown for permanent lateral restraint of webs shall have bracing installed per BCSI sections B3, B7, or B10, as applicable. Apply plates to each face of truss and position as shown above and on the Joint Details, unless noted otherwise. Refer to drawings 160A-Z for standard plate positions.

Alpine, a division of ITW Building Components Group Inc. shall not be responsible for any deviation from this drawing,any failure to build the truss in conformance with ANSI/TPI 1, or for handling, shipping, installation and bracing of trusses**A seal on this drawing or cover page listing this drawing, indicates acceptance of professional engineering responsibility solely for the design shown. The suitability and use of this drawing for any structure is the responsibility of the Building Designer per ANSI/TPI 1 Sec.2.**

For more information see this job's general notes page and these web sites: ALPINE: www.alpineitw.com; TPI: www.tpinst.org; SBCA: www.sbcindustry.com; ICC: www.iccsafe.org

ALPINE
AN ITW COMPANY
2400 Lake Orange Dr.
Suite 150
Orlando FL, 32837

Job Number: 16-0982 HUBBART RESIDENCE **Truss Label:** P01	Ply: 1 Qty: 1	SEQN: 468357 / T55 HIPS FROM: CDM	Cust: R215 JRef: 1VZZ2150001 DrwNo: 104.17.1308.13540 KM / DF 04/14/2017

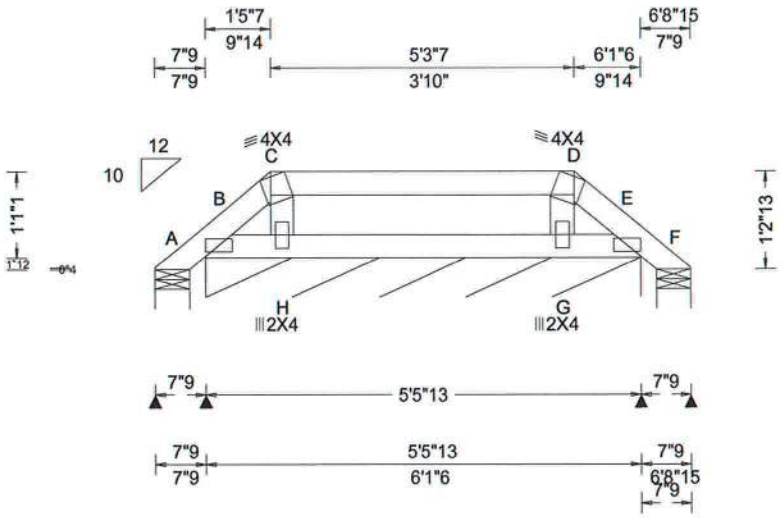

Loading Criteria (psf)
TCLL: 20.00
TCDL: 10.00
BCLL: 0.00
BCDL: 10.00
Des Ld: 40.00
NCBCLL: 10.00
Soffit: 2.00
Load Duration: 1.25
Spacing: 24.0 "

Wind Criteria
Wind Std: ASCE 7-10
Speed: 130 mph
Enclosure: Closed
Risk Category: II
EXP: C
Mean Height: 20.63 ft
TCDL: 5.0 psf
BCDL: 5.0 psf
MWFRS Parallel Dist: h/2 to h
C&C Dist a: 3.00 ft
Loc. from endwall: not in 9.00 ft
GCpi: 0.18
Wind Duration: 1.60

Snow Criteria (Pg,Pf in PSF)
Pg: NA Ct: NA CAT: NA
Pf: NA Ce: NA
Lu: NA Cs: NA
Snow Duration: NA

Code / Misc Criteria
Bldg Code: FBC 2014 RES
TPI Std: 2007
Rep Factors Used: Yes
FT/RT:20(0)/10(0)
Plate Type(s):
WAVE

Defl/CSI Criteria

PP Deflection in	loc	L/defl	L/#
VERT(LL): 0.000	C	999	240
VERT(TL): 0.000	C	999	180
HORZ(LL): 0.000	G	-	-
HORZ(TL): 0.000	G	-	-

Creep Factor: 1.5
Max TC CSI: 0.116
Max BC CSI: 0.033
Max Web CSI: 0.009

VIEW Ver: 16.02.01B.0131.17

▲ Maximum Reactions (lbs), or *=PLF

Loc	R	/ U	/ Rw	/ Rh	/ RL	/ W
A	23	/ 15	/ 32	/ -	/ 33	/ 5.2
B*	91	/ 16	/ 50	/ -	/ -	/ 65.8
F	23	/ 6	/ 20	/ -	/ -	/ 5.2

Wind reactions based on MWFRS
A Min Brg Width Req = 1.5
B Min Brg Width Req = -
F Min Brg Width Req = 1.5
Bearings A, B, & F are a rigid surface.

Members not listed have forces less than 375#

Lumber
Top chord 2x4 SP M-31
Bot chord 2x4 SP M-31
Webs 2x4 SP M-31

Plating Notes
All plates are 2X4(B1) except as noted.

Purlins
In lieu of structural panels use purlins to brace all flat TC @ 24" oc.

Wind
Wind loads based on MWFRS with additional C&C member design.

Additional Notes
Refer to DWG PB160101014 for piggyback details.

#0 278
04/14/2017

****WARNING**** READ AND FOLLOW ALL NOTES ON THIS DRAWING!
****IMPORTANT**** FURNISH THIS DRAWING TO ALL CONTRACTORS INCLUDING THE INSTALLERS

Trusses require extreme care in fabricating, handling, shipping, installing and bracing. Refer to and follow the latest edition of BCSI (Building Component Safety Information, by TPI and SBCA) for safety practices prior to performing these functions. Installers shall provide temporary bracing per BCSI. Unless noted otherwise,top chord shall have properly attached structural sheathing and bottom chord shall have a properly attached rigid ceiling. Locations shown for permanent lateral restraint of webs shall have bracing installed per BCSI sections B3, B7, or B10, as applicable. Apply plates to each face of truss and position as shown above and on the Joint Details, unless noted otherwise. Refer to drawings 160A-Z for standard plate positions.

Alpine, a division of ITW Building Components Group Inc. shall not be responsible for any deviation from this drawing,any failure to build the truss in conformance with ANSI/TPI 1, or for handling, shipping, installation and bracing of trusses**A seal on this drawing or cover page listing this drawing, indicates acceptance of professional engineering responsibility solely for the design shown. The suitability and use of this drawing for any structure is the responsibility of the Building Designer per ANSI/TPI 1 Sec.2.**

For more information see this job's general notes page and these web sites: ALPINE: www.alpineitw.com; TPI: www.tpinst.org; SBCA: www.sbcindustry.com; ICC: www.iccsafe.org

ALPINE™ AN ITW COMPANY
2400 Lake Orange Dr.
Suite 150
Orlando FL, 32837

Job Number: 16-0982 HUBBART RESIDENCE **Truss Label:** P02	Ply: 1 Qty: 1	SEQN: 468359 / T74 SPEC FROM: CDM	Cust: R215 JRef: 1VZZ2150001 DrwNo: 104.17.1308.15443 KM / DF 04/14/2017

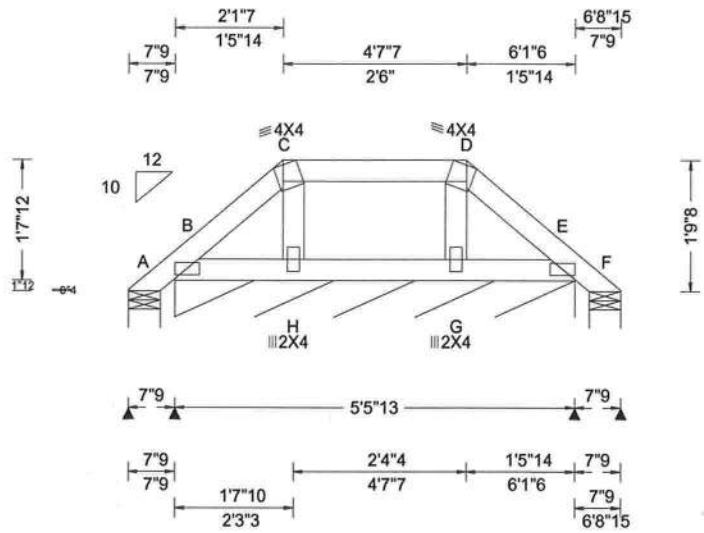

Loading Criteria (psf)

TCLL:	20.00
TCDL:	10.00
BCLL:	0.00
BCDL:	10.00
Des Ld:	40.00
NCBCLL:	10.00
Soffit:	2.00

Load Duration: 1.25
Spacing: 24.0 "

Wind Criteria
Wind Std: ASCE 7-10
Speed: 130 mph
Enclosure: Closed
Risk Category: II
EXP: C
Mean Height: 20.91 ft
TCDL: 5.0 psf
BCDL: 5.0 psf
MWFRS Parallel Dist: h/2 to h
C&C Dist a: 3.00 ft
Loc. from endwall: not in 9.00 ft
GCpi: 0.18
Wind Duration: 1.60

Snow Criteria (Pg,Pf in PSF)
Pg: NA Ct: NA CAT: NA
Pf: NA Ce: NA
Lu: NA Cs: NA
Snow Duration: NA

Code / Misc Criteria
Bldg Code: FBC 2014 RES
TPI Std: 2007
Rep Factors Used: Yes
FT/RT:20(0)/10(0)
Plate Type(s):
WAVE

Defl/CSI Criteria

PP Deflection in	loc	L/defl	L/#
VERT(LL): 0.000	D	999	240
VERT(TL): 0.000	D	999	180
HORZ(LL): 0.000	G	-	-
HORZ(TL): 0.000	G	-	-

Creep Factor: 1.5
Max TC CSI: 0.035
Max BC CSI: 0.013
Max Web CSI: 0.009

VIEW Ver: 16.02.01B.0131.17

▲ Maximum Reactions (lbs), or *=PLF

Loc	R	/ U	/ Rw	/ Rh	/ RL	/ W
A	15	/ 31	/ 46	/ -	/ 50	/ 5.2
B*	93	/ 14	/ 55	/ -	/ -	/ 65.8
F	21	/ 3	/ 15	/ -	/ -	/ 5.2

Wind reactions based on MWFRS
A Min Brg Width Req = 1.5
B Min Brg Width Req = -
F Min Brg Width Req = 1.5
Bearings A, B, & F are a rigid surface.

Members not listed have forces less than 375#

Lumber

Top chord 2x4 SP M-31
Bot chord 2x4 SP M-31
Webs 2x4 SP M-31

Plating Notes

All plates are 2X4(B1) except as noted.

Purlins

In lieu of structural panels use purlins to brace all flat TC @ 24" oc.

Wind

Wind loads based on MWFRS with additional C&C member design.

Additional Notes

Refer to DWG PB160101014 for piggyback details.

DOUGLAS FLEMING
LICENSE
No. 66648
STATE OF
FLORIDA
PROFESSIONAL ENGINEER

#0 278
04/14/2017

****WARNING**** READ AND FOLLOW ALL NOTES ON THIS DRAWING!
****IMPORTANT**** FURNISH THIS DRAWING TO ALL CONTRACTORS INCLUDING THE INSTALLERS

Trusses require extreme care in fabricating, handling, shipping, installing and bracing. Refer to and follow the latest edition of BCSI (Building Component Safety Information, by TPI and SBCA) for safety practices prior to performing these functions. Installers shall provide temporary bracing per BCSI. Unless noted otherwise,top chord shall have properly attached structural sheathing and bottom chord shall have a properly attached rigid ceiling. Locations shown for permanent lateral restraint of webs shall have bracing installed per BCSI sections B3, B7, or B10, as applicable. Apply plates to each face of truss and position as shown above and on the Joint Details, unless noted otherwise. Refer to drawings 160A-Z for standard plate positions.

Alpine, a division of ITW Building Components Group Inc. shall not be responsible for any deviation from this drawing,any failure to build the truss in conformance with ANSI/TPI 1, or for handling, shipping, installation and bracing of trusses**A seal on this drawing or cover page listing this drawing, indicates acceptance of professional engineering responsibility solely for the design shown. The suitability and use of this drawing for any structure is the responsibility of the Building Designer per ANSI/TPI 1 Sec.2.**

For more information see this job's general notes page and these web sites: ALPINE: www.alpineitw.com; TPI: www.tpinst.org; SBCA: www.sbcindustry.com; ICC: www.iccsafe.org

ALPINE
AN ITW COMPANY
2400 Lake Orange Dr.
Suite 150
Orlando FL, 32837

Job Number: 16-0982 HUBBART RESIDENCE **Truss Label:** P02A	Ply: 1 Qty: 4	SEQN: 468361 / T75 SPEC FROM: CDM	Cust: R215 JRef: 1VZZ2150001 DrwNo: 104.17.1308.16810 KM / DF 04/14/2017

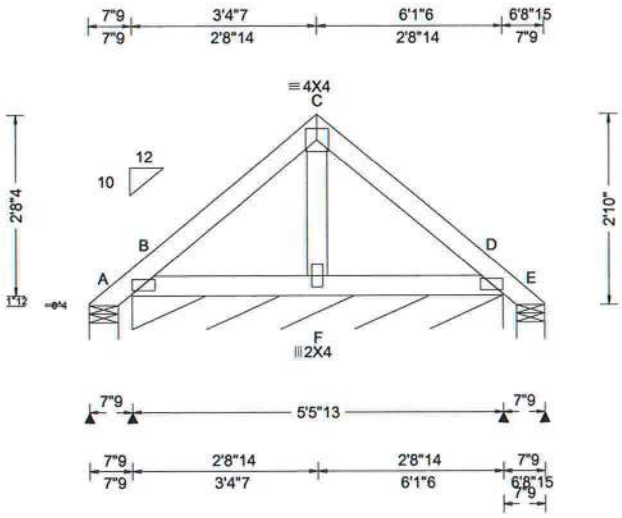

Loading Criteria (psf)
TCLL: 20.00
TCDL: 10.00
BCLL: 0.00
BCDL: 10.00
Des Ld: 40.00
NCBCLL: 10.00
Soffit: 2.00
Load Duration: 1.25
Spacing: 24.0 "

Wind Criteria
Wind Std: ASCE 7-10
Speed: 130 mph
Enclosure: Closed
Risk Category: II
EXP: C
Mean Height: 21.43 ft
TCDL: 5.0 psf
BCDL: 5.0 psf
MWFRS Parallel Dist: h/2 to h
C&C Dist a: 3.00 ft
Loc. from endwall: not in 9.00 ft
GCpi: 0.18
Wind Duration: 1.60

Snow Criteria (Pg,Pf in PSF)
Pg: NA Ct: NA CAT: NA
Pf: NA Ce: NA
Lu: NA Cs: NA
Snow Duration: NA

Code / Misc Criteria
Bldg Code: FBC 2014 RES
TPI Std: 2007
Rep Factors Used: Yes
FT/RT:20(0)/10(0)
Plate Type(s):
WAVE

Defl/CSI Criteria

PP Deflection in	loc	L/defl	L/#
VERT(LL): 0.000	F	999	240
VERT(TL): 0.001	F	999	180
HORZ(LL): -0.000	F	-	-
HORZ(TL): -0.001	F	-	-

Creep Factor: 1.5
Max TC CSI: 0.032
Max BC CSI: 0.029
Max Web CSI: 0.006

VIEW Ver: 16.02.01B.0131.17

▲ Maximum Reactions (lbs), or *=PLF

Loc	R	/ U	/ Rw	/ Rh	/ RL	/ W
A	-30	/ 79	/ 77	/ -	/ 82	/ 5.2
B*	110	/ 21	/ 67	/ -	/ -	/ 65.8
E	-30	/ 30	/ 25	/ -	/ -	/ 5.2

Wind reactions based on MWFRS
A Min Brg Width Req = 1.5
B Min Brg Width Req = -
E Min Brg Width Req = 1.5
Bearings A, B, & E are a rigid surface.

Members not listed have forces less than 375#

Lumber
Top chord 2x4 SP M-31
Bot chord 2x4 SP M-31
Webs 2x4 SP M-31

Plating Notes
All plates are 2X4(B1) except as noted.

Wind
Wind loads based on MWFRS with additional C&C member design.

Additional Notes
Refer to DWG PB160101014 for piggyback details.

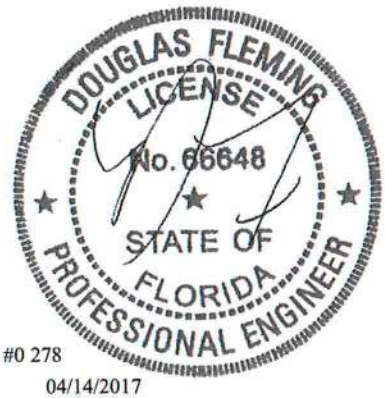

#0 278
04/14/2017

****WARNING**** READ AND FOLLOW ALL NOTES ON THIS DRAWING!
****IMPORTANT**** FURNISH THIS DRAWING TO ALL CONTRACTORS INCLUDING THE INSTALLERS

Trusses require extreme care in fabricating, handling, shipping, installing and bracing. Refer to and follow the latest edition of BCSI (Building Component Safety Information, by TPI and SBCA) for safety practices prior to performing these functions. Installers shall provide temporary bracing per BCSI. Unless noted otherwise,top chord shall have properly attached structural sheathing and bottom chord shall have a properly attached rigid ceiling. Locations shown for permanent lateral restraint of webs shall have bracing installed per BCSI sections B3, B7, or B10, as applicable. Apply plates to each face of truss and position as shown above and on the Joint Details, unless noted otherwise. Refer to drawings 160A-Z for standard plate positions.

Alpine, a division of ITW Building Components Group Inc. shall not be responsible for any deviation from this drawing,any failure to build the truss in conformance with ANSI/TPI 1, or for handling, shipping, installation and bracing of trusses**A seal on this drawing or cover page listing this drawing, indicates acceptance of professional engineering responsibility solely for the design shown. The suitability and use of this drawing for any structure is the responsibility of the Building Designer per ANSI/TPI 1 Sec.2.**

For more information see this job's general notes page and these web sites: ALPINE: www.alpineitw.com; TPI: www.tpinst.org; SBCA: www.sbcindustry.com; ICC: www.iccsafe.org

ALPINE
AN ITW COMPANY
2400 Lake Orange Dr.
Suite 150
Orlando FL, 32837

Job Number: 16-0982 HUBBART RESIDENCE **Truss Label:** P03	Ply: 1 Qty: 1	SEQN: 468299 / T107 COMN FROM: CDM	Cust: R215 JRef: 1VZZ2150001 DrwNo: 104.17.1308.18790 KM / DF 04/14/2017

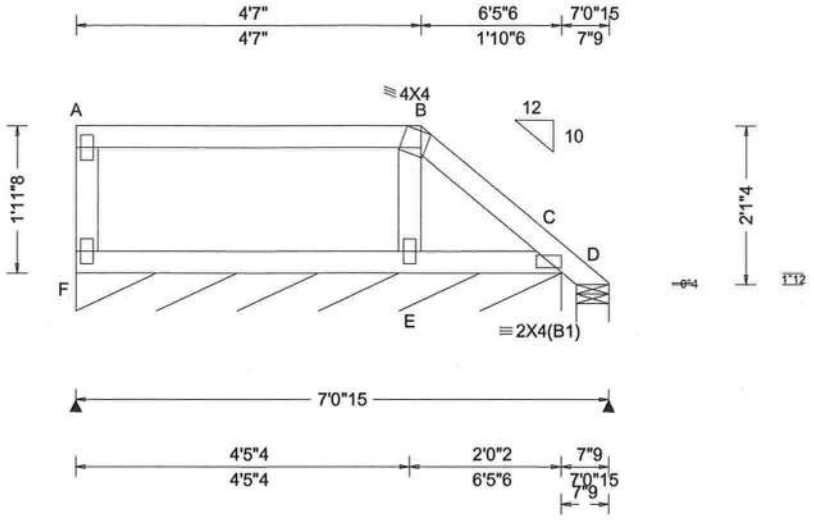

Loading Criteria (psf)

TCLL:	20.00
TCDL:	10.00
BCLL:	0.00
BCDL:	10.00
Des Ld:	40.00
NCBCLL:	10.00
Soffit:	2.00

Load Duration: 1.25
Spacing: 24.0 "

Wind Criteria
Wind Std: ASCE 7-10
Speed: 130 mph
Enclosure: Closed
Risk Category: II
EXP: C
Mean Height: 21.06 ft
TCDL: 5.0 psf
BCDL: 5.0 psf
MWFRS Parallel Dist: h/2 to h
C&C Dist a: 3.00 ft
Loc. from endwall: not in 9.00 ft
GCpi: 0.18
Wind Duration: 1.60

Snow Criteria (Pg,Pf in PSF)
Pg: NA Ct: NA CAT: NA
Pf: NA Ce: NA
Lu: NA Cs: NA
Snow Duration: NA

Code / Misc Criteria
Bldg Code: FBC 2014 RES
TPI Std: 2007
Rep Factors Used: Yes
FT/RT:20(0)/10(0)
Plate Type(s):
WAVE

Defl/CSI Criteria

PP Deflection in	loc	L/defl	L/#
VERT(LL): 0.000	B	999	240
VERT(TL): 0.001	B	999	180
HORZ(LL): 0.000	B	-	-
HORZ(TL): 0.000	E	-	-

Creep Factor: 1.5
Max TC CSI: 0.113
Max BC CSI: 0.063
Max Web CSI: 0.021

VIEW Ver: 16.02.01B.0131.17

▲ Maximum Reactions (lbs), or *=PLF

Loc	R	/ U	/ Rw	/ Rh	/ RL	/ W
F*	86	/ 17	/ 50	/ -	/ 9	/ 77.4
D	39	/ 11	/ 24	/ -	/ -	/ 5.2

Wind reactions based on MWFRS
F Min Brg Width Req = -
D Min Brg Width Req = 1.5
Bearings F & D are a rigid surface.

Members not listed have forces less than 375#

Lumber
Top chord 2x4 SP M-31
Bot chord 2x4 SP M-31
Webs 2x4 SP M-31

Plating Notes
All plates are 2X4 except as noted.

Purlins
In lieu of structural panels use purlins to brace all flat TC @ 24" oc.

Wind
Wind loads based on MWFRS with additional C&C member design.

Additional Notes
Refer to DWG PB160101014 for piggyback details.

#0 278
04/14/2017

****WARNING**** READ AND FOLLOW ALL NOTES ON THIS DRAWING!
****IMPORTANT**** FURNISH THIS DRAWING TO ALL CONTRACTORS INCLUDING THE INSTALLERS

Trusses require extreme care in fabricating, handling, shipping, installing and bracing. Refer to and follow the latest edition of BCSI (Building Component Safety Information, by TPI and SBCA) for safety practices prior to performing these functions. Installers shall provide temporary bracing per BCSI. Unless noted otherwise,top chord shall have properly attached structural sheathing and bottom chord shall have a properly attached rigid ceiling. Locations shown for permanent lateral restraint of webs shall have bracing installed per BCSI sections B3, B7, or B10, as applicable. Apply plates to each face of truss and position as shown above and on the Joint Details, unless noted otherwise. Refer to drawings 160A-Z for standard plate positions.

Alpine, a division of ITW Building Components Group Inc. shall not be responsible for any deviation from this drawing,any failure to build the truss in conformance with ANSI/TPI 1, or for handling, shipping, installation and bracing of trusses**A seal on this drawing or cover page listing this drawing, indicates acceptance of professional engineering responsibility solely for the design shown. The suitability and use of this drawing for any structure is the responsibility of the Building Designer per ANSI/TPI 1 Sec.2.**

For more information see this job's general notes page and these web sites: ALPINE: www.alpineitw.com; TPI: www.tpinst.org; SBCA: www.sbcindustry.com; ICC: www.iccsafe.org

ALPINE
AN ITW COMPANY
2400 Lake Orange Dr.
Suite 150
Orlando FL, 32837

Job Number: 16-0982 HUBBART RESIDENCE **Truss Label:** P04	Ply: 1 Qty: 1	SEQN: 468301 / T123 COMN FROM: CDM	Cust: R215 JRef: 1VZZ2150001 DrwNo: 104.17.1308.20223 KM / DF 04/14/2017

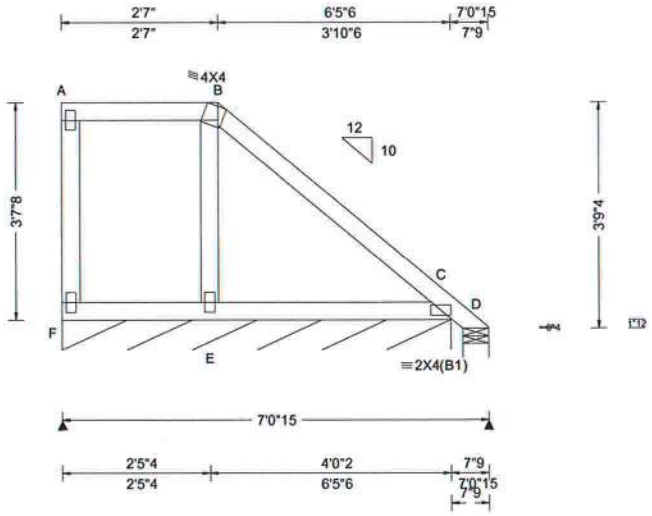

Loading Criteria (psf)
TCLL: 20.00
TCDL: 10.00
BCLL: 0.00
BCDL: 10.00
Des Ld: 40.00
NCBCLL: 10.00
Soffit: 2.00
Load Duration: 1.25
Spacing: 24.0 "

Wind Criteria
Wind Std: ASCE 7-10
Speed: 130 mph
Enclosure: Closed
Risk Category: II
EXP: C
Mean Height: 21.89 ft
TCDL: 5.0 psf
BCDL: 5.0 psf
MWFRS Parallel Dist: h/2 to h
C&C Dist a: 3.00 ft
Loc. from endwall: not in 9.00 ft
GCpi: 0.18
Wind Duration: 1.60

Snow Criteria (Pg,Pf in PSF)
Pg: NA Ct: NA CAT: NA
Pf: NA Ce: NA
Lu: NA Cs: NA
Snow Duration: NA

Code / Misc Criteria
Bldg Code: FBC 2014 RES
TPI Std: 2007
Rep Factors Used: Yes
FT/RT:20(0)/10(0)
Plate Type(s):
WAVE

Defl/CSI Criteria

PP Deflection in	loc	L/defl	L/#
VERT(LL): 0.001	E	999	240
VERT(TL): 0.002	E	999	180
HORZ(LL): 0.001	B	-	-
HORZ(TL):-0.002	E	-	-

Creep Factor: 1.5
Max TC CSI: 0.050
Max BC CSI: 0.043
Max Web CSI: 0.027

VIEW Ver: 16.02.01B.0131.17

▲ Maximum Reactions (lbs), or *=PLF

Loc	R	/ U	/ Rw	/ Rh	/ RL	/ W
F*	105	/ 23	/ 70	/ -	/ 16	/ 77.4
D	-87	/ 87	/ 57	/ -	/ -	/ 5.2

Wind reactions based on MWFRS
F Min Brg Width Req = -
D Min Brg Width Req = 1.5
Bearings F & D are a rigid surface.

Members not listed have forces less than 375#

Lumber
Top chord 2x4 SP M-31
Bot chord 2x4 SP M-31
Webs 2x4 SP M-31

Plating Notes
All plates are 2X4 except as noted.

Purlins
In lieu of structural panels use purlins to brace all flat TC @ 24" oc.

Wind
Wind loads based on MWFRS with additional C&C member design.
Left end vertical not exposed to wind pressure.

Additional Notes
Refer to DWG PB160101014 for piggyback details.

#0 278

04/14/2017

****WARNING**** READ AND FOLLOW ALL NOTES ON THIS DRAWING!
****IMPORTANT**** FURNISH THIS DRAWING TO ALL CONTRACTORS INCLUDING THE INSTALLERS

Trusses require extreme care in fabricating, handling, shipping, installing and bracing. Refer to and follow the latest edition of BCSI (Building Component Safety Information, by TPI and SBCA) for safety practices prior to performing these functions. Installers shall provide temporary bracing per BCSI. Unless noted otherwise,top chord shall have properly attached structural sheathing and bottom chord shall have a properly attached rigid ceiling. Locations shown for permanent lateral restraint of webs shall have bracing installed per BCSI sections B3, B7, or B10, as applicable. Apply plates to each face of truss and position as shown above and on the Joint Details, unless noted otherwise. Refer to drawings 160A-Z for standard plate positions.

Alpine, a division of ITW Building Components Group Inc. shall not be responsible for any deviation from this drawing,any failure to build the truss in conformance with ANSI/TPI 1, or for handling, shipping, installation and bracing of trusses**A seal on this drawing or cover page listing this drawing, indicates acceptance of professional engineering responsibility solely for the design shown. The suitability and use of this drawing for any structure is the responsibility of the Building Designer per ANSI/TPI 1 Sec.2.**

For more information see this job's general notes page and these web sites: ALPINE: www.alpineitw.com; TPI: www.tpinst.org; SBCA: www.sbcindustry.com; ICC: www.iccsafe.org

ALPINE AN ITW COMPANY
2400 Lake Orange Dr.
Suite 150
Orlando FL, 32837

Job Number: 16-0982 HUBBART RESIDENCE **Truss Label:** P05	Ply: 1 Qty: 1	SEQN: 468305 / T131 COMN FROM: CDM	Cust: R215 JRef: 1VZZ2150001 DrwNo: 104.17.1308.22333 KM / DF 04/14/2017

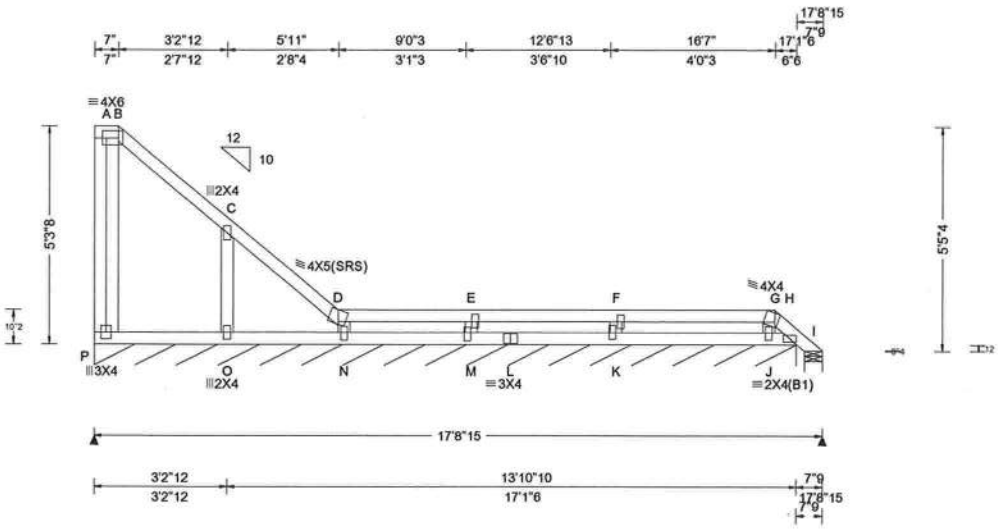

Loading Criteria (psf)	**Wind Criteria**	**Snow Criteria** (Pg,Pf in PSF)	**Defl/CSI Criteria**	**▲Maximum Reactions (lbs), or *=PLF**
TCLL: 20.00 TCDL: 10.00 BCLL: 0.00 BCDL: 10.00 Des Ld: 40.00 NCBCLL: 10.00 Soffit: 2.00 Load Duration: 1.25 Spacing: 24.0 "	Wind Std: ASCE 7-10 Speed: 130 mph Enclosure: Closed Risk Category: II EXP: C Mean Height: 22.73 ft TCDL: 5.0 psf BCDL: 5.0 psf MWFRS Parallel Dist: h/2 to h C&C Dist a: 3.00 ft Loc. from endwall: not in 9.00 ft GCpi: 0.18 Wind Duration: 1.60	Pg: NA Ct: NA CAT: NA Pf: NA Ce: NA Lu: NA Cs: NA Snow Duration: NA **Code / Misc Criteria** Bldg Code: FBC 2014 RES TPI Std: 2007 Rep Factors Used: Yes FT/RT:20(0)/10(0) Plate Type(s): WAVE	PP Deflection in loc L/defl L/# VERT(LL): -0.001 A 999 240 VERT(TL): -0.003 A 999 180 HORZ(LL): 0.002 C - - HORZ(TL): 0.003 C - - Creep Factor: 1.5 Max TC CSI: 0.098 Max BC CSI: 0.038 Max Web CSI: 0.020 VIEW Ver: 16.02.01B.0131.17	Loc R / U / Rw / Rh / RL / W P* 87 / 18 / 50 / - / 9 / 205 I 23 / - / 17 / - / - / 5.2 Wind reactions based on MWFRS P Min Brg Width Req = - I Min Brg Width Req = 1.5 Bearings P & I are a rigid surface. Members not listed have forces less than 375#

Lumber

Top chord 2x4 SP M-31
Bot chord 2x4 SP M-31
Webs 2x4 SP M-31

Plating Notes

All plates are 2X4(**) except as noted.

(**) 6 plate(s) require special positioning. Refer to scaled plate plot details for special positioning requirements.

Purlins

In lieu of structural panels use purlins to brace all flat TC @ 24" oc.

Wind

Wind loads based on MWFRS with additional C&C member design.

Left end vertical not exposed to wind pressure.

Additional Notes

Refer to DWG PB160101014 for piggyback details.

04/14/2017

****WARNING**** READ AND FOLLOW ALL NOTES ON THIS DRAWING!
****IMPORTANT**** FURNISH THIS DRAWING TO ALL CONTRACTORS INCLUDING THE INSTALLERS

Trusses require extreme care in fabricating, handling, shipping, installing and bracing. Refer to and follow the latest edition of BCSI (Building Component Safety Information, by TPI and SBCA) for safety practices prior to performing these functions. Installers shall provide temporary bracing per BCSI. Unless noted otherwise,top chord shall have properly attached structural sheathing and bottom chord shall have a properly attached rigid ceiling. Locations shown for permanent lateral restraint of webs shall have bracing installed per BCSI sections B3, B7, or B10, as applicable. Apply plates to each face of truss and position as shown above and on the Joint Details, unless noted otherwise. Refer to drawings 160A-Z for standard plate positions.

Alpine, a division of ITW Building Components Group Inc. shall not be responsible for any deviation from this drawing,any failure to build the truss in conformance with ANSI/TPI 1, or for handling, shipping, installation and bracing of trusses**A seal on this drawing or cover page listing this drawing, indicates acceptance of professional engineering responsibility solely for the design shown. The suitability and use of this drawing for any structure is the responsibility of the Building Designer per ANSI/TPI 1 Sec.2.**

For more information see this job's general notes page and these web sites: ALPINE: www.alpineitw.com; TPI: www.tpinst.org; SBCA: www.sbcindustry.com; ICC: www.iccsafe.org

ALPINE
AN ITW COMPANY
2400 Lake Orange Dr.
Suite 150
Orlando FL, 32837

Job Number: 16-0982 HUBBART RESIDENCE **Truss Label:** P06	Ply: 1 Qty: 1	SEQN: 468308 / T130 COMN FROM: CDM	Cust: R215 JRef: 1VZZ2150001 DrwNo: 104.17.1308.23797 KM / DF 04/14/2017

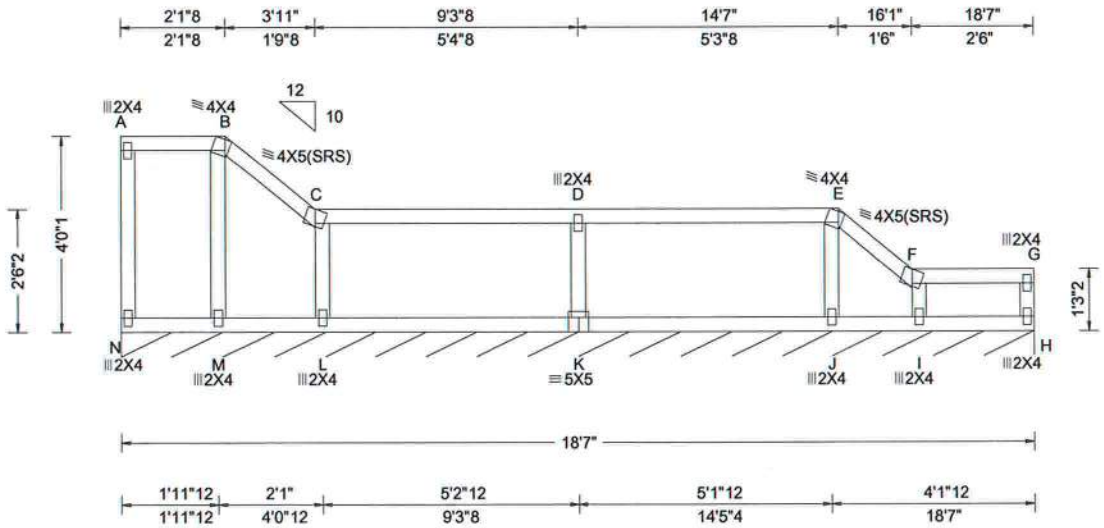

Loading Criteria (psf)
TCLL: 20.00
TCDL: 10.00
BCLL: 0.00
BCDL: 10.00
Des Ld: 40.00
NCBCLL: 10.00
Soffit: 2.00
Load Duration: 1.25
Spacing: 24.0 "

Wind Criteria
Wind Std: ASCE 7-10
Speed: 130 mph
Enclosure: Closed
Risk Category: II
EXP: C
Mean Height: 22.78 ft
TCDL: 5.0 psf
BCDL: 5.0 psf
MWFRS Parallel Dist: h/2 to h
C&C Dist a: 3.00 ft
Loc. from endwall: not in 9.00 ft
GCpi: 0.18
Wind Duration: 1.60

Snow Criteria (Pg,Pf in PSF)
Pg: NA Ct: NA CAT: NA
Pf: NA Ce: NA
Lu: NA Cs: NA
Snow Duration: NA

Code / Misc Criteria
Bldg Code: FBC 2014 RES
TPI Std: 2007
Rep Factors Used: Yes
FT/RT:20(0)/10(0)
Plate Type(s):
WAVE

Defl/CSI Criteria

PP Deflection in	loc	L/defl	L/#
VERT(LL): -0.005	F	999	240
VERT(TL): -0.008	F	999	180
HORZ(LL): 0.033	F	-	-
HORZ(TL): 0.051	F	-	-

Creep Factor: 1.5
Max TC CSI: 0.205
Max BC CSI: 0.072
Max Web CSI: 0.043

VIEW Ver: 16.02.01B.0131.17

▲ Maximum Reactions (lbs), or *=PLF

Loc	R	/ U	/ Rw	/ Rh	/ RL	/ W
N*	86	/ 21	/ 45	/ -	/ 4	/ 222

Wind reactions based on MWFRS
N Min Brg Width Req = -
Bearing N is a rigid surface.

Members not listed have forces less than 375#

Maximum Web Forces Per Ply (lbs)

Webs	Tens.	Comp.
D - K	182	-419

Lumber
Top chord 2x4 SP M-31
Bot chord 2x4 SP M-31
Webs 2x4 SP M-31

Purlins
In lieu of structural panels use purlins to brace all flat TC @ 24" oc.

Wind
Wind loads based on MWFRS with additional C&C member design.
Left end vertical not exposed to wind pressure.

Additional Notes
Refer to DWG PB160101014 for piggyback details.

DOUGLAS FLEMING
LICENSE
No. 66648
STATE OF
FLORIDA
PROFESSIONAL ENGINEER
#0 278

04/14/2017

****WARNING**** READ AND FOLLOW ALL NOTES ON THIS DRAWING!
****IMPORTANT**** FURNISH THIS DRAWING TO ALL CONTRACTORS INCLUDING THE INSTALLERS

Trusses require extreme care in fabricating, handling, shipping, installing and bracing. Refer to and follow the latest edition of BCSI (Building Component Safety Information, by TPI and SBCA) for safety practices prior to performing these functions. Installers shall provide temporary bracing per BCSI. Unless noted otherwise,top chord shall have properly attached structural sheathing and bottom chord shall have a properly attached rigid ceiling. Locations shown for permanent lateral restraint of webs shall have bracing installed per BCSI sections B3, B7, or B10, as applicable. Apply plates to each face of truss and position as shown above and on the Joint Details, unless noted otherwise. Refer to drawings 160A-Z for standard plate positions.

Alpine, a division of ITW Building Components Group Inc. shall not be responsible for any deviation from this drawing,any failure to build the truss in conformance with ANSI/TPI 1, or for handling, shipping, installation and bracing of trusses**A seal on this drawing or cover page listing this drawing, indicates acceptance of professional engineering responsibility solely for the design shown. The suitability and use of this drawing for any structure is the responsibility of the Building Designer per ANSI/TPI 1 Sec.2.**

For more information see this job's general notes page and these web sites: ALPINE: www.alpineitw.com; TPI: www.tpinst.org; SBCA: www.sbcindustry.com; ICC: www.iccsafe.org

ALPINE
AN ITW COMPANY
2400 Lake Orange Dr.
Suite 150
Orlando FL, 32837

Job Number: 16-0982 HUBBART RESIDENCE **Truss Label:** P07	Ply: 1 Qty: 1	SEQN: 468311 / T132 FLAT FROM: CDM	Cust: R215 JRef: 1VZZ2150001 DrwNo: 104.17.1308.25433 KM / DF 04/14/2017

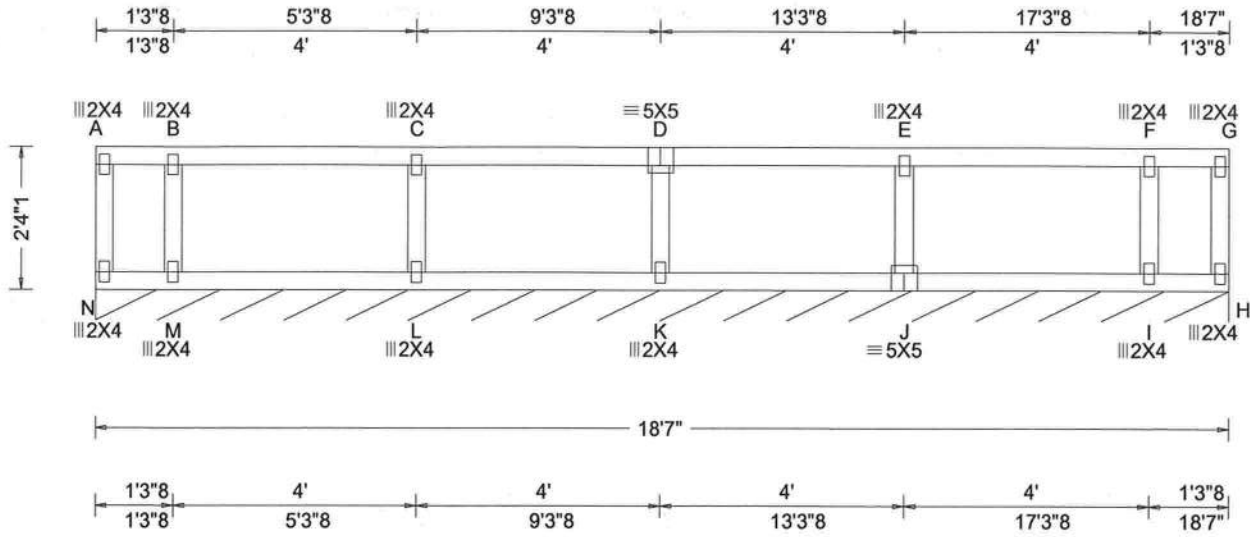

Loading Criteria (psf)

TCLL:	20.00
TCDL:	10.00
BCLL:	0.00
BCDL:	10.00
Des Ld:	40.00
NCBCLL:	10.00
Soffit:	2.00

Load Duration: 1.25
Spacing: 24.0 "

Wind Criteria
Wind Std: ASCE 7-10
Speed: 130 mph
Enclosure: Closed
Risk Category: II
EXP: C
Mean Height: 22.48 ft
TCDL: 5.0 psf
BCDL: 5.0 psf
MWFRS Parallel Dist: h/2 to h
C&C Dist a: 3.00 ft
Loc. from endwall: not in 9.00 ft
GCpi: 0.18
Wind Duration: 1.60

Snow Criteria (Pg,Pf in PSF)
Pg: NA Ct: NA CAT: NA
Pf: NA Ce: NA
Lu: NA Cs: NA
Snow Duration: NA

Code / Misc Criteria
Bldg Code: FBC 2014 RES
TPI Std: 2007
Rep Factors Used: Yes
FT/RT:20(0)/10(0)
Plate Type(s):
WAVE

Defl/CSI Criteria

PP Deflection in	loc	L/defl	L/#
VERT(LL): 0.000	C	999	240
VERT(TL): 0.001	C	999	180
HORZ(LL): 0.000	G	-	-
HORZ(TL): 0.000	A	-	-

Creep Factor: 1.5
Max TC CSI: 0.069
Max BC CSI: 0.043
Max Web CSI: 0.021

VIEW Ver: 16.02.01B.0131.17

▲ Maximum Reactions (lbs), or *=PLF

Loc	R	/ U	/ Rw	/ Rh	/ RL	/ W
N*	80	/ 25	/ 41	/ -	/ -	/ 222

Wind reactions based on MWFRS
N Min Brg Width Req = -
Bearing N is a rigid surface.

Members not listed have forces less than 375#

Lumber

Top chord 2x4 SP M-31
Bot chord 2x4 SP M-31
Webs 2x4 SP M-31

Wind

Wind loads based on MWFRS with additional C&C member design.

End verticals not exposed to wind pressure.

Additional Notes

Truss must be installed as shown with top chord up.

Refer to DWG PB160101014 for piggyback details.

DOUGLAS FLEMING
LICENSE
No. 66648
STATE OF
FLORIDA
PROFESSIONAL ENGINEER
#0 278

04/14/2017

****WARNING**** READ AND FOLLOW ALL NOTES ON THIS DRAWING!
****IMPORTANT**** FURNISH THIS DRAWING TO ALL CONTRACTORS INCLUDING THE INSTALLERS

Trusses require extreme care in fabricating, handling, shipping, installing and bracing. Refer to and follow the latest edition of BCSI (Building Component Safety Information, by TPI and SBCA) for safety practices prior to performing these functions. Installers shall provide temporary bracing per BCSI. Unless noted otherwise,top chord shall have properly attached structural sheathing and bottom chord shall have a properly attached rigid ceiling. Locations shown for permanent lateral restraint of webs shall have bracing installed per BCSI sections B3, B7, or B10, as applicable. Apply plates to each face of truss and position as shown above and on the Joint Details, unless noted otherwise. Refer to drawings 160A-Z for standard plate positions.

Alpine, a division of ITW Building Components Group Inc. shall not be responsible for any deviation from this drawing,any failure to build the truss in conformance with ANSI/TPI 1, or for handling, shipping, installation and bracing of trusses**A seal on this drawing or cover page listing this drawing, indicates acceptance of professional engineering responsibility solely for the design shown. The suitability and use of this drawing for any structure is the responsibility of the Building Designer per ANSI/TPI 1 Sec.2.**

For more information see this job's general notes page and these web sites: ALPINE: www.alpineitw.com; TPI: www.tpinst.org; SBCA: www.sbcindustry.com; ICC: www.iccsafe.org

ALPINE
AN ITW COMPANY
2400 Lake Orange Dr.
Suite 150
Orlando FL, 32837

Job Number: 16-0982 HUBBART RESIDENCE **Truss Label:** P08	Ply: 1 Qty: 1	SEQN: 468314 / T133 FLAT FROM: CDM	Cust: R215 JRef: 1VZZ2150001 DrwNo: 104.17.1308.33987 KM / DF 04/14/2017

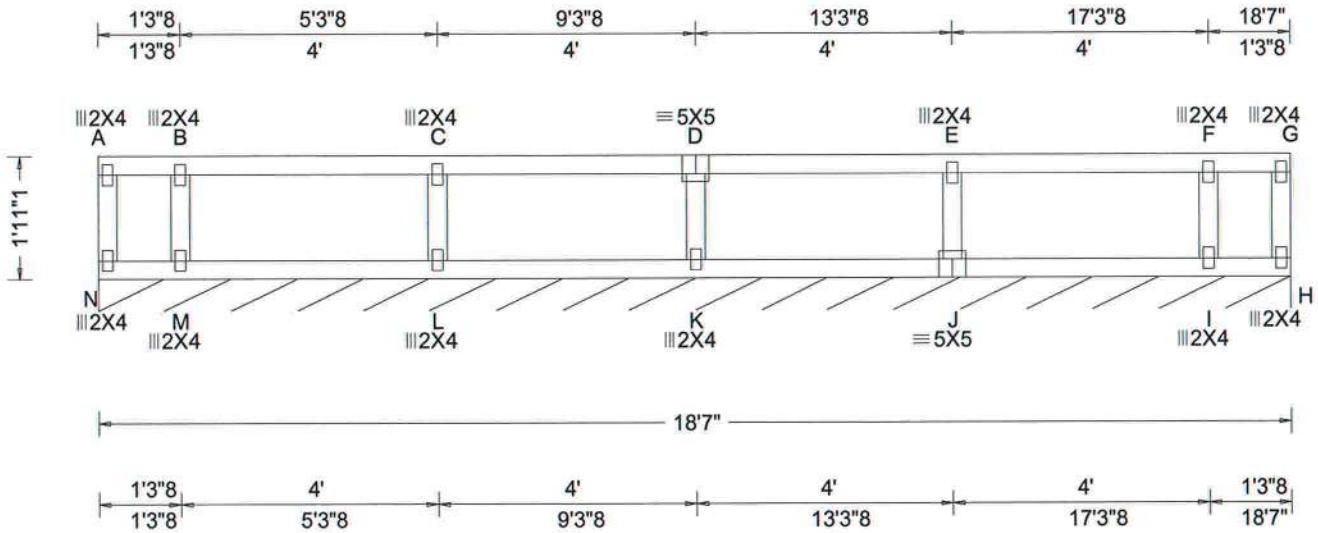

Loading Criteria (psf)

TCLL:	20.00
TCDL:	10.00
BCLL:	0.00
BCDL:	10.00
Des Ld:	40.00
NCBCLL:	10.00
Soffit:	2.00

Load Duration: 1.25
Spacing: 24.0 "

Wind Criteria
Wind Std: ASCE 7-10
Speed: 130 mph
Enclosure: Closed
Risk Category: II
EXP: C
Mean Height: 22.07 ft
TCDL: 5.0 psf
BCDL: 5.0 psf
MWFRS Parallel Dist: h/2 to h
C&C Dist a: 3.00 ft
Loc. from endwall: not in 9.00 ft
GCpi: 0.18
Wind Duration: 1.60

Snow Criteria (Pg,Pf in PSF)
Pg: NA Ct: NA CAT: NA
Pf: NA Ce: NA
Lu: NA Cs: NA
Snow Duration: NA

Code / Misc Criteria
Bldg Code: FBC 2014 RES
TPI Std: 2007
Rep Factors Used: Yes
FT/RT:20(0)/10(0)
Plate Type(s):
WAVE

Defl/CSI Criteria

PP Deflection in	loc	L/defl	L/#
VERT(LL): 0.000	C	999	240
VERT(TL): 0.001	C	999	180
HORZ(LL): 0.000	G	-	-
HORZ(TL): 0.000	A	-	-

Creep Factor: 1.5
Max TC CSI: 0.069
Max BC CSI: 0.043
Max Web CSI: 0.020

VIEW Ver: 16.02.01B.0131.17

▲ Maximum Reactions (lbs), or *=PLF

Loc	R	/ U	/ Rw	/ Rh	/ RL	/ W
N*	80	/ 25	/ 41	/ -	/ -	/ 222

Wind reactions based on MWFRS
N Min Brg Width Req = -
Bearing N is a rigid surface.

Members not listed have forces less than 375#

Lumber

Top chord 2x4 SP M-31
Bot chord 2x4 SP M-31
Webs 2x4 SP M-31

Wind

Wind loads based on MWFRS with additional C&C member design.

Additional Notes

Truss must be installed as shown with top chord up.

Refer to DWG PB160101014 for piggyback details.

#0 278

04/14/2017

****WARNING**** READ AND FOLLOW ALL NOTES ON THIS DRAWING!
****IMPORTANT**** FURNISH THIS DRAWING TO ALL CONTRACTORS INCLUDING THE INSTALLERS

Trusses require extreme care in fabricating, handling, shipping, installing and bracing. Refer to and follow the latest edition of BCSI (Building Component Safety Information, by TPI and SBCA) for safety practices prior to performing these functions. Installers shall provide temporary bracing per BCSI. Unless noted otherwise,top chord shall have properly attached structural sheathing and bottom chord shall have a properly attached rigid ceiling. Locations shown for permanent lateral restraint of webs shall have bracing installed per BCSI sections B3, B7, or B10, as applicable. Apply plates to each face of truss and position as shown above and on the Joint Details, unless noted otherwise. Refer to drawings 160A-Z for standard plate positions.

Alpine, a division of ITW Building Components Group Inc. shall not be responsible for any deviation from this drawing,any failure to build the truss in conformance with ANSI/TPI 1, or for handling, shipping, installation and bracing of trusses**A seal on this drawing or cover page listing this drawing, indicates acceptance of professional engineering responsibility solely for the design shown. The suitability and use of this drawing for any structure is the responsibility of the Building Designer per ANSI/TPI 1 Sec.2.**

For more information see this job's general notes page and these web sites: ALPINE: www.alpineitw.com; TPI: www.tpinst.org; SBCA: www.sbcindustry.com; ICC: www.iccsafe.org

ALPINE
AN ITW COMPANY
2400 Lake Orange Dr.
Suite 150
Orlando FL, 32837

Job Number: 16-0982 HUBBART RESIDENCE **Truss Label:** P09	Ply: 2 Qty: 1	SEQN: 462447 / T90 MONO FROM: CDM	Cust: R215 JRef: 1VZZ2150001 DrwNo: 104.17.1308.43793 KM / DF 04/14/2017

2 Complete Trusses Required

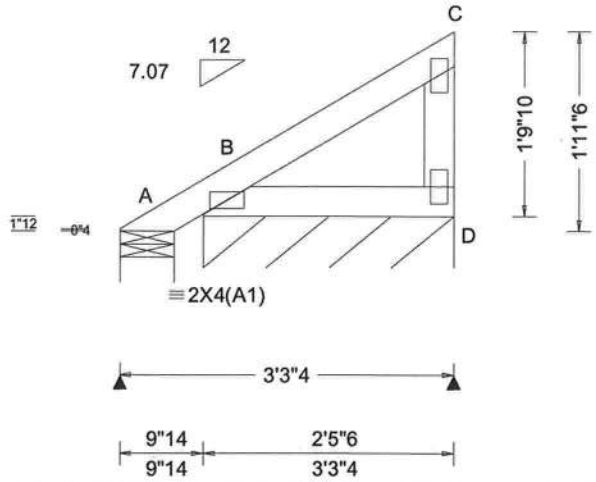

Loading Criteria (psf)	**Wind Criteria**	**Snow Criteria** (Pg,Pf in PSF)	**Defl/CSI Criteria**	**▲Maximum Reactions (lbs), or *=PLF**
TCLL: 20.00 TCDL: 10.00 BCLL: 0.00 BCDL: 10.00 Des Ld: 40.00 NCBCLL: 10.00 Soffit: 2.00 Load Duration: 1.25 Spacing: 24.0 "	Wind Std: ASCE 7-10 Speed: 130 mph Enclosure: Closed Risk Category: II EXP: C Mean Height: 22.98 ft TCDL: 5.0 psf BCDL: 5.0 psf MWFRS Parallel Dist: h to 2h C&C Dist a: 3.00 ft Loc. from endwall: not in 9.00 ft GCpi: 0.18 Wind Duration: 1.60	Pg: NA Ct: NA CAT: NA Pf: NA Ce: NA Lu: NA Cs: NA Snow Duration: NA **Code / Misc Criteria** Bldg Code: FBC 2014 RES TPI Std: 2007 Rep Factors Used: Yes FT/RT:20(0)/10(0) Plate Type(s): WAVE	PP Deflection in loc L/defl L/# VERT(LL): NA VERT(TL): NA HORZ(LL): 0.000 D - - HORZ(TL): 0.000 D - - Creep Factor: 1.5 Max TC CSI: 0.011 Max BC CSI: 0.009 Max Web CSI: 0.003 VIEW Ver: 16.01.00D.0413.16	Loc R / U / Rw / Rh / RL / W A 5 / 8 / 24 / - / 40 / 6.5 B* 104 / 18 / 74 / - / - / 29.4 Wind reactions based on MWFRS A Min Brg Width Req = 1.5 B Min Brg Width Req = - Bearings A & B are a rigid surface. Members not listed have forces less than 375#

Lumber

Top chord 2x4 SP M-31
Bot chord 2x4 SP M-31
Webs 2x4 SP M-31

Nailnote

Nail Schedule:0.131"x3", min. nails
Top Chord: 1 Row @12.00" o.c.
Bot Chord: 1 Row @12.00" o.c.
Webs : 1 Row @ 4" o.c.
Use equal spacing between rows and stagger nails in each row to avoid splitting.

Plating Notes

All plates are 2X4 except as noted.

Wind

Wind loads based on MWFRS with additional C&C member design.

Additional Notes

Refer to DWG PB160101014 for piggyback details.

DOUGLAS FLEMING
LICENSE
No. 66648
STATE OF
FLORIDA
PROFESSIONAL ENGINEER

#0 278

04/14/2017

****WARNING**** READ AND FOLLOW ALL NOTES ON THIS DRAWING!
****IMPORTANT**** FURNISH THIS DRAWING TO ALL CONTRACTORS INCLUDING THE INSTALLERS

Trusses require extreme care in fabricating, handling, shipping, installing and bracing. Refer to and follow the latest edition of BCSI (Building Component Safety Information, by TPI and SBCA) for safety practices prior to performing these functions. Installers shall provide temporary bracing per BCSI. Unless noted otherwise,top chord shall have properly attached structural sheathing and bottom chord shall have a properly attached rigid ceiling. Locations shown for permanent lateral restraint of webs shall have bracing installed per BCSI sections B3, B7, or B10, as applicable. Apply plates to each face of truss and position as shown above and on the Joint Details, unless noted otherwise. Refer to drawings 160A-Z for standard plate positions.

Alpine, a division of ITW Building Components Group Inc. shall not be responsible for any deviation from this drawing,any failure to build the truss in conformance with ANSI/TPI 1, or for handling, shipping, installation and bracing of trusses**A seal on this drawing or cover page listing this drawing, indicates acceptance of professional engineering responsibility solely for the design shown. The suitability and use of this drawing for any structure is the responsibility of the Building Designer per ANSI/TPI 1 Sec.2.**

For more information see this job's general notes page and these web sites: ALPINE: www.alpineitw.com; TPI: www.tpinst.org; SBCA: www.sbcindustry.com; ICC: www.iccsafe.org

ALPINE
AN ITW COMPANY
2400 Lake Orange Dr.
Suite 150
Orlando FL, 32837

Job Number: 16-0982 HUBBART RESIDENCE **Truss Label:** P10	Ply: 1 Qty: 1	SEQN: 455370 / T59 COMN FROM: CDM	Cust: R215 JRef: 1VZZ2150001 DrwNo: 104.17.1308.45250 KM / DF 04/14/2017

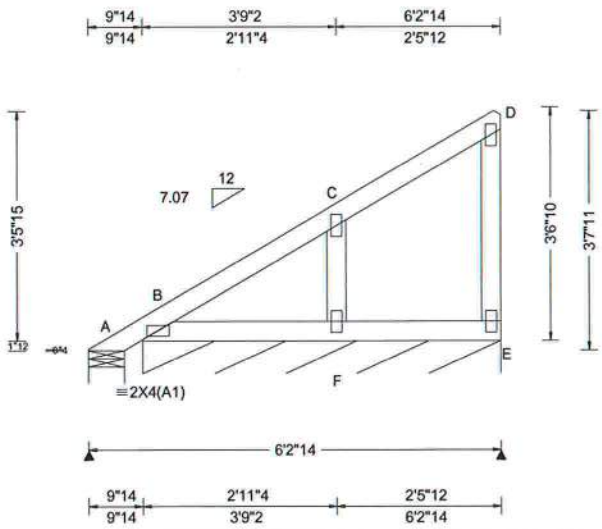

Loading Criteria (psf)

TCLL:	20.00
TCDL:	10.00
BCLL:	0.00
BCDL:	10.00
Des Ld:	40.00
NCBCLL:	10.00
Soffit:	2.00

Load Duration: 1.25
Spacing: 24.0 "

Wind Criteria
Wind Std: ASCE 7-10
Speed: 130 mph
Enclosure: Closed
Risk Category: II
EXP: C
Mean Height: 23.83 ft
TCDL: 5.0 psf
BCDL: 5.0 psf
MWFRS Parallel Dist: h to 2h
C&C Dist a: 3.00 ft
Loc. from endwall: not in 9.00 ft
GCpi: 0.18
Wind Duration: 1.60

Snow Criteria (Pg,Pf in PSF)
Pg: NA Ct: NA CAT: NA
Pf: NA Ce: NA
Lu: NA Cs: NA
Snow Duration: NA

Code / Misc Criteria
Bldg Code: FBC 2014 RES
TPI Std: 2007
Rep Factors Used: Yes
FT/RT:20(0)/10(0)
Plate Type(s):
WAVE

Defl/CSI Criteria

PP Deflection in	loc	L/defl	L/#
VERT(LL): 0.000	F	999	240
VERT(TL): 0.001	F	999	180
HORZ(LL): -0.000	D	-	-
HORZ(TL): 0.001	F	-	-

Creep Factor: 1.5
Max TC CSI: 0.033
Max BC CSI: 0.028
Max Web CSI: 0.014

VIEW Ver: 16.01.00D.0413.17

▲ Maximum Reactions (lbs), or *=PLF

Loc	R	/ U	/ Rw	/ Rh	/ RL	/ W
A	5	/ 15	/ 45	/ -	/ 79	/ 6.5
B*	91	/ 16	/ 66	/ -	/ -	/ 65.0

Wind reactions based on MWFRS
A Min Brg Width Req = 1.5
B Min Brg Width Req = -
Bearings A & B are a rigid surface.

Members not listed have forces less than 375#

Lumber
Top chord 2x4 SP M-31
Bot chord 2x4 SP M-31
Webs 2x4 SP M-31

Plating Notes
All plates are 2X4 except as noted.

Wind
Wind loads based on MWFRS with additional C&C member design.
Right end vertical not exposed to wind pressure.

Additional Notes
Refer to DWG PB160101014 for piggyback details.

#0 278
04/14/2017

****WARNING**** READ AND FOLLOW ALL NOTES ON THIS DRAWING!
****IMPORTANT**** FURNISH THIS DRAWING TO ALL CONTRACTORS INCLUDING THE INSTALLERS

Trusses require extreme care in fabricating, handling, shipping, installing and bracing. Refer to and follow the latest edition of BCSI (Building Component Safety Information, by TPI and SBCA) for safety practices prior to performing these functions. Installers shall provide temporary bracing per BCSI. Unless noted otherwise,top chord shall have properly attached structural sheathing and bottom chord shall have a properly attached rigid ceiling. Locations shown for permanent lateral restraint of webs shall have bracing installed per BCSI sections B3, B7, or B10, as applicable. Apply plates to each face of truss and position as shown above and on the Joint Details, unless noted otherwise. Refer to drawings 160A-Z for standard plate positions.

Alpine, a division of ITW Building Components Group Inc. shall not be responsible for any deviation from this drawing,any failure to build the truss in conformance with ANSI/TPI 1, or for handling, shipping, installation and bracing of trusses**A seal on this drawing or cover page listing this drawing, indicates acceptance of professional engineering responsibility solely for the design shown. The suitability and use of this drawing for any structure is the responsibility of the Building Designer per ANSI/TPI 1 Sec.2.**

For more information see this job's general notes page and these web sites: ALPINE: www.alpineitw.com; TPI: www.tpinst.org; SBCA: www.sbcindustry.com; ICC: www.iccsafe.org

ALPINE AN ITW COMPANY
2400 Lake Orange Dr.
Suite 150
Orlando FL, 32837

Job Number: 16-0982 HUBBART RESIDENCE **Truss Label:** P11	Ply: 1 Qty: 1	SEQN: 455368 / T63 COMN FROM: CDM	Cust: R215 JRef: 1VZZ2150001 DrwNo: 104.17.1308.46400 KM / DF 04/14/2017

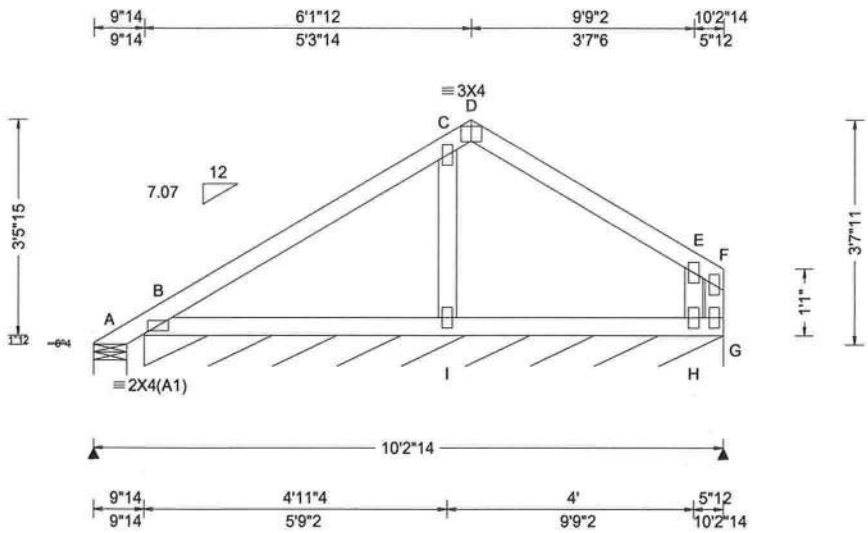

Loading Criteria (psf)	**Wind Criteria**	**Snow Criteria** (Pg,Pf in PSF)	**Defl/CSI Criteria**	**▲ Maximum Reactions (lbs), or *=PLF**
TCLL: 20.00 TCDL: 10.00 BCLL: 0.00 BCDL: 10.00 Des Ld: 40.00 NCBCLL: 10.00 Soffit: 2.00 Load Duration: 1.25 Spacing: 24.0 "	Wind Std: ASCE 7-10 Speed: 130 mph Enclosure: Closed Risk Category: II EXP: C Mean Height: 23.83 ft TCDL: 5.0 psf BCDL: 5.0 psf MWFRS Parallel Dist: h to 2h C&C Dist a: 3.00 ft Loc. from endwall: not in 9.00 ft GCpi: 0.18 Wind Duration: 1.60	Pg: NA Ct: NA CAT: NA Pf: NA Ce: NA Lu: NA Cs: NA Snow Duration: NA **Code / Misc Criteria** Bldg Code: FBC 2014 RES TPI Std: 2007 Rep Factors Used: Yes FT/RT:20(0)/10(0) Plate Type(s): WAVE	PP Deflection in loc L/defl L/# VERT(LL): 0.002 D 999 240 VERT(TL): 0.007 D 999 180 HORZ(LL): 0.002 F - - HORZ(TL): 0.009 F - - Creep Factor: 1.5 Max TC CSI: 0.080 Max BC CSI: 0.064 Max Web CSI: 0.032 VIEW Ver: 16.01.00D.0413.17	Loc R / U / Rw / Rh / RL / W A -118 / 118 / 84 / - / 93 / 6.5 B* 99 / 12 / 62 / - / - / 113 A / 118 G / 146 Wind reactions based on MWFRS A Min Brg Width Req = 1.5 B Min Brg Width Req = - Bearings A & B are a rigid surface. Members not listed have forces less than 375#

Lumber

Top chord 2x4 SP M-31
Bot chord 2x4 SP M-31
Webs 2x4 SP M-31

Plating Notes

All plates are 2X4 except as noted.

Wind

Wind loads based on MWFRS with additional C&C member design.

Additional Notes

Refer to DWG PB160101014 for piggyback details.

#0 278

04/14/2017

****WARNING**** READ AND FOLLOW ALL NOTES ON THIS DRAWING!
****IMPORTANT**** FURNISH THIS DRAWING TO ALL CONTRACTORS INCLUDING THE INSTALLERS

Trusses require extreme care in fabricating, handling, shipping, installing and bracing. Refer to and follow the latest edition of BCSI (Building Component Safety Information, by TPI and SBCA) for safety practices prior to performing these functions. Installers shall provide temporary bracing per BCSI. Unless noted otherwise,top chord shall have properly attached structural sheathing and bottom chord shall have a properly attached rigid ceiling. Locations shown for permanent lateral restraint of webs shall have bracing installed per BCSI sections B3, B7, or B10, as applicable. Apply plates to each face of truss and position as shown above and on the Joint Details, unless noted otherwise. Refer to drawings 160A-Z for standard plate positions.

Alpine, a division of ITW Building Components Group Inc. shall not be responsible for any deviation from this drawing,any failure to build the truss in conformance with ANSI/TPI 1, or for handling, shipping, installation and bracing of trusses**A seal on this drawing or cover page listing this drawing, indicates acceptance of professional engineering responsibility solely for the design shown. The suitability and use of this drawing for any structure is the responsibility of the Building Designer per ANSI/TPI 1 Sec.2.**

For more information see this job's general notes page and these web sites: ALPINE: www.alpineitw.com; TPI: www.tpinst.org; SBCA: www.sbcindustry.com; ICC: www.iccsafe.org

ALPINE™ AN ITW COMPANY
2400 Lake Orange Dr.
Suite 150
Orlando FL, 32837

Job Number: 16-0982 HUBBART RESIDENCE **Truss Label:** P12	Ply: 1 Qty: 1	SEQN: 455366 / T65 COMN FROM: CDM	Cust: R215 JRef: 1VZZ2150001 DrwNo: 104.17.1308.48360 KM / DF 04/14/2017

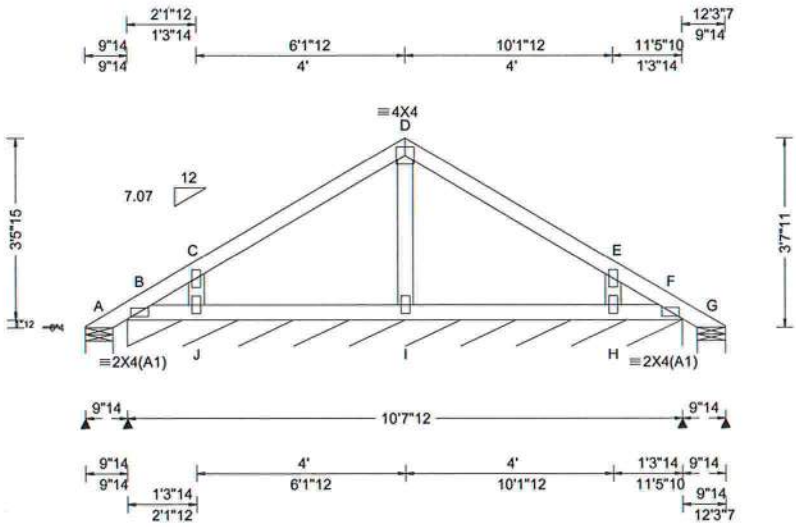

Loading Criteria (psf)	**Wind Criteria**	**Snow Criteria** (Pg,Pf in PSF)	**Defl/CSI Criteria**	**▲Maximum Reactions (lbs), or *=PLF**
TCLL: 20.00 TCDL: 10.00 BCLL: 0.00 BCDL: 10.00 Des Ld: 40.00 NCBCLL: 10.00 Soffit: 2.00 Load Duration: 1.25 Spacing: 24.0 "	Wind Std: ASCE 7-10 Speed: 130 mph Enclosure: Closed Risk Category: II EXP: C Mean Height: 23.83 ft TCDL: 5.0 psf BCDL: 5.0 psf MWFRS Parallel Dist: h to 2h C&C Dist a: 3.00 ft Loc. from endwall: not in 9.00 ft GCpi: 0.18 Wind Duration: 1.60	Pg: NA Ct: NA CAT: NA Pf: NA Ce: NA Lu: NA Cs: NA Snow Duration: NA **Code / Misc Criteria** Bldg Code: FBC 2014 RES TPI Std: 2007 Rep Factors Used: Yes FT/RT:20(0)/10(0) Plate Type(s): WAVE	PP Deflection in loc L/defl L/# VERT(LL): 0.000 D 999 240 VERT(TL): 0.001 D 999 180 HORZ(LL): 0.000 E - - HORZ(TL): 0.001 H - - Creep Factor: 1.5 Max TC CSI: 0.079 Max BC CSI: 0.045 Max Web CSI: 0.022 VIEW Ver: 16.01.00D.0413.17	Loc R / U / Rw / Rh / RL / W A 34 / 42 / 62 / - / 98 / 6.5 B* 86 / 7 / 50 / - / - / 127 G 34 / 5 / 24 / - / - / 6.5 J / 170 H / 170 Wind reactions based on MWFRS A Min Brg Width Req = 1.5 B Min Brg Width Req = - G Min Brg Width Req = 1.5 Bearings A, B, & G are a rigid surface. Members not listed have forces less than 375#

Lumber

Top chord 2x4 SP M-31
Bot chord 2x4 SP M-31
Webs 2x4 SP M-31

Plating Notes

All plates are 2X4 except as noted.

Wind

Wind loads based on MWFRS with additional C&C member design.

Additional Notes

Refer to DWG PB160101014 for piggyback details.

#0 278

04/14/2017

****WARNING**** READ AND FOLLOW ALL NOTES ON THIS DRAWING!
****IMPORTANT**** FURNISH THIS DRAWING TO ALL CONTRACTORS INCLUDING THE INSTALLERS

Trusses require extreme care in fabricating, handling, shipping, installing and bracing. Refer to and follow the latest edition of BCSI (Building Component Safety Information, by TPI and SBCA) for safety practices prior to performing these functions. Installers shall provide temporary bracing per BCSI. Unless noted otherwise,top chord shall have properly attached structural sheathing and bottom chord shall have a properly attached rigid ceiling. Locations shown for permanent lateral restraint of webs shall have bracing installed per BCSI sections B3, B7, or B10, as applicable. Apply plates to each face of truss and position as shown above and on the Joint Details, unless noted otherwise. Refer to drawings 160A-Z for standard plate positions.

Alpine, a division of ITW Building Components Group Inc. shall not be responsible for any deviation from this drawing,any failure to build the truss in conformance with ANSI/TPI 1, or for handling, shipping, installation and bracing of trusses**A seal on this drawing or cover page listing this drawing, indicates acceptance of professional engineering responsibility solely for the design shown. The suitability and use of this drawing for any structure is the responsibility of the Building Designer per ANSI/TPI 1 Sec.2.**

For more information see this job's general notes page and these web sites: ALPINE: www.alpineitw.com; TPI: www.tpinst.org; SBCA: www.sbcindustry.com; ICC: www.iccsafe.org

ALPINE
AN ITW COMPANY
2400 Lake Orange Dr.
Suite 150
Orlando FL, 32837

Job Number: 16-0982 HUBBART RESIDENCE **Truss Label:** P13	Ply: 1 Qty: 1	SEQN: 455364 / T66 COMN FROM: CDM	Cust: R215 JRef: 1VZZ2150001 DrwNo: 104.17.1308.49877 KM / DF 04/14/2017

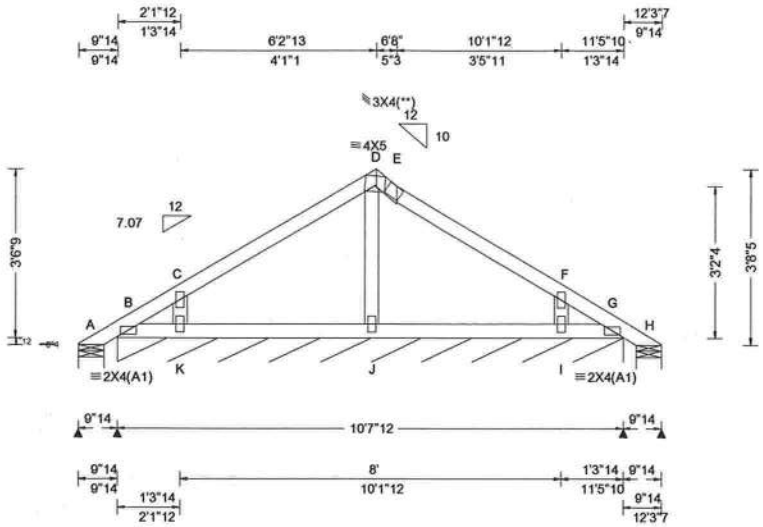

Loading Criteria (psf)	**Wind Criteria**	**Snow Criteria** (Pg,Pf in PSF)	**Defl/CSI Criteria**	**▲Maximum Reactions (lbs), or *=PLF**
TCLL: 20.00 TCDL: 10.00 BCLL: 0.00 BCDL: 10.00 Des Ld: 40.00 NCBCLL: 10.00 Soffit: 2.00 Load Duration: 1.25 Spacing: 24.0 "	Wind Std: ASCE 7-10 Speed: 130 mph Enclosure: Closed Risk Category: II EXP: C Mean Height: 23.86 ft TCDL: 5.0 psf BCDL: 5.0 psf MWFRS Parallel Dist: h to 2h C&C Dist a: 3.00 ft Loc. from endwall: not in 9.00 ft GCpi: 0.18 Wind Duration: 1.60	Pg: NA Ct: NA CAT: NA Pf: NA Ce: NA Lu: NA Cs: NA Snow Duration: NA **Code / Misc Criteria** Bldg Code: FBC 2014 RES TPI Std: 2007 Rep Factors Used: Yes FT/RT:20(0)/10(0) Plate Type(s): WAVE	PP Deflection in loc L/defl L/# VERT(LL): 0.006 E 999 240 VERT(TL): 0.015 E 999 180 HORZ(LL): -0.004 E - - HORZ(TL): -0.010 E - - Creep Factor: 1.5 Max TC CSI: 0.091 Max BC CSI: 0.045 Max Web CSI: 0.031 VIEW Ver: 16.01.00D.0413.17	Loc R / U / Rw / Rh / RL / W A 33 / 41 / 62 / - / 100 / 6.5 B* 86 / 7 / 50 / - / - / 127 H 31 / 4 / 22 / - / - / 6.5 K / 178 I / 180 Wind reactions based on MWFRS A Min Brg Width Req = 1.5 B Min Brg Width Req = - H Min Brg Width Req = 1.5 Bearings A, B, & H are a rigid surface. Members not listed have forces less than 375#

Lumber

Top chord 2x4 SP M-31
Bot chord 2x4 SP M-31
Webs 2x4 SP M-31

Plating Notes

All plates are 2X4 except as noted.

(**) 1 plate(s) require special positioning. Refer to scaled plate plot details for special positioning requirements.

Wind

Wind loads based on MWFRS with additional C&C member design.

Additional Notes

Refer to DWG PB160101014 for piggyback details.

DOUGLAS FLEMING
LICENSE
No. 66648
STATE OF
FLORIDA
PROFESSIONAL ENGINEER

#0 278
04/14/2017

****WARNING**** READ AND FOLLOW ALL NOTES ON THIS DRAWING!
****IMPORTANT**** FURNISH THIS DRAWING TO ALL CONTRACTORS INCLUDING THE INSTALLERS

Trusses require extreme care in fabricating, handling, shipping, installing and bracing. Refer to and follow the latest edition of BCSI (Building Component Safety Information, by TPI and SBCA) for safety practices prior to performing these functions. Installers shall provide temporary bracing per BCSI. Unless noted otherwise,top chord shall have properly attached structural sheathing and bottom chord shall have a properly attached rigid ceiling. Locations shown for permanent lateral restraint of webs shall have bracing installed per BCSI sections B3, B7, or B10, as applicable. Apply plates to each face of truss and position as shown above and on the Joint Details, unless noted otherwise. Refer to drawings 160A-Z for standard plate positions.

Alpine, a division of ITW Building Components Group Inc. shall not be responsible for any deviation from this drawing,any failure to build the truss in conformance with ANSI/TPI 1, or for handling, shipping, installation and bracing of trusses**A seal on this drawing or cover page listing this drawing, indicates acceptance of professional engineering responsibility solely for the design shown. The suitability and use of this drawing for any structure is the responsibility of the Building Designer per ANSI/TPI 1 Sec.2.**

For more information see this job's general notes page and these web sites: ALPINE: www.alpineitw.com; TPI: www.tpinst.org; SBCA: www.sbcindustry.com; ICC: www.iccsafe.org

ALPINE
AN ITW COMPANY
2400 Lake Orange Dr.
Suite 150
Orlando FL, 32837

Job Number: 16-0982 HUBBART RESIDENCE **Truss Label:** P14	Ply: 1 Qty: 1	SEQN: 455362 / T16 COMN FROM: CDM	Cust: R215 JRef: 1VZZ2150001 DrwNo: 104.17.1308.50877 KM / DF 04/14/2017

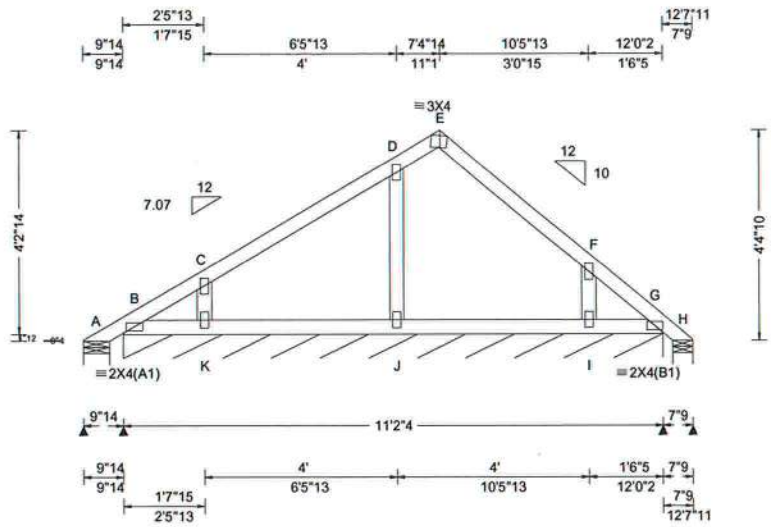

Loading Criteria (psf)	**Wind Criteria**	**Snow Criteria** (Pg,Pf in PSF)	**Defl/CSI Criteria**	**▲Maximum Reactions (lbs), or *=PLF**
TCLL: 20.00 TCDL: 10.00 BCLL: 0.00 BCDL: 10.00 Des Ld: 40.00 NCBCLL: 10.00 Soffit: 2.00 Load Duration: 1.25 Spacing: 24.0 "	Wind Std: ASE 7-10 Speed: 130 mph Enclosure: Closed Risk Category: II EXP: C Mean Height: 24.20 ft TCDL: 5.0 psf BCDL: 5.0 psf MWFRS Parallel Dist: h to 2h C&C Dist a: 3.00 ft Loc. from endwall: not in 9.00 ft GCpi: 0.18 Wind Duration: 1.60	Pg: NA Ct: NA CAT: NA Pf: NA Ce: NA Lu: NA Cs: NA Snow Duration: NA **Code / Misc Criteria** Bldg Code: FBC 2014 RES TPI Std: 2007 Rep Factors Used: Yes FT/RT:20(0)/10(0) Plate Type(s): WAVE	PP Deflection in loc L/defl L/# VERT(LL): 0.001 E 999 240 VERT(TL): 0.003 E 999 180 HORZ(LL): 0.001 F - - HORZ(TL): 0.002 I - - Creep Factor: 1.5 Max TC CSI: 0.055 Max BC CSI: 0.047 Max Web CSI: 0.027 VIEW Ver: 16.01.00D.0413.17	Loc R / U / Rw / Rh / RL / W A 36 / 54 / 82 / - / 132 / 6.5 B* 86 / 7 / 54 / - / - / 134 H 38 / 0 / 26 / - / - / 5.2 K / 136 J / 108 I / 150 Wind reactions based on MWFRS A Min Brg Width Req = 1.5 B Min Brg Width Req = - H Min Brg Width Req = 1.5 Bearings A, B, & H are a rigid surface. Members not listed have forces less than 375#

Lumber

Top chord 2x4 SP M-31
Bot chord 2x4 SP M-31
Webs 2x4 SP M-31

Plating Notes

All plates are 2X4 except as noted.

Wind

Wind loads based on MWFRS with additional C&C member design.

Additional Notes

Refer to DWG PB160101014 for piggyback details.

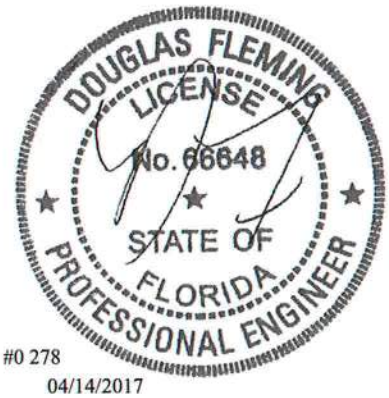

#0 278
04/14/2017

****WARNING**** READ AND FOLLOW ALL NOTES ON THIS DRAWING!
****IMPORTANT**** FURNISH THIS DRAWING TO ALL CONTRACTORS INCLUDING THE INSTALLERS

Trusses require extreme care in fabricating, handling, shipping, installing and bracing. Refer to and follow the latest edition of BCSI (Building Component Safety Information, by TPI and SBCA) for safety practices prior to performing these functions. Installers shall provide temporary bracing per BCSI. Unless noted otherwise,top chord shall have properly attached structural sheathing and bottom chord shall have a properly attached rigid ceiling. Locations shown for permanent lateral restraint of webs shall have bracing installed per BCSI sections B3, B7, or B10, as applicable. Apply plates to each face of truss and position as shown above and on the Joint Details, unless noted otherwise. Refer to drawings 160A-Z for standard plate positions.

Alpine, a division of ITW Building Components Group Inc. shall not be responsible for any deviation from this drawing,any failure to build the truss in conformance with ANSI/TPI 1, or for handling, shipping, installation and bracing of trusses**A seal on this drawing or cover page listing this drawing, indicates acceptance of professional engineering responsibility solely for the design shown. The suitability and use of this drawing for any structure is the responsibility of the Building Designer per ANSI/TPI 1 Sec.2.**

For more information see this job's general notes page and these web sites: ALPINE: www.alpineitw.com; TPI: www.tpinst.org; SBCA: www.sbcindustry.com; ICC: www.iccsafe.org

ALPINE AN ITW COMPANY
2400 Lake Orange Dr.
Suite 150
Orlando FL, 32837

Job Number: 16-0982 HUBBART RESIDENCE **Truss Label:** P15	Ply: 1 Qty: 1	SEQN: 455361 / T57 COMN FROM: CDM	Cust: R215 JRef: 1VZZ2150001 DrwNo: 104.17.1308.52060 KM / DF 04/14/2017

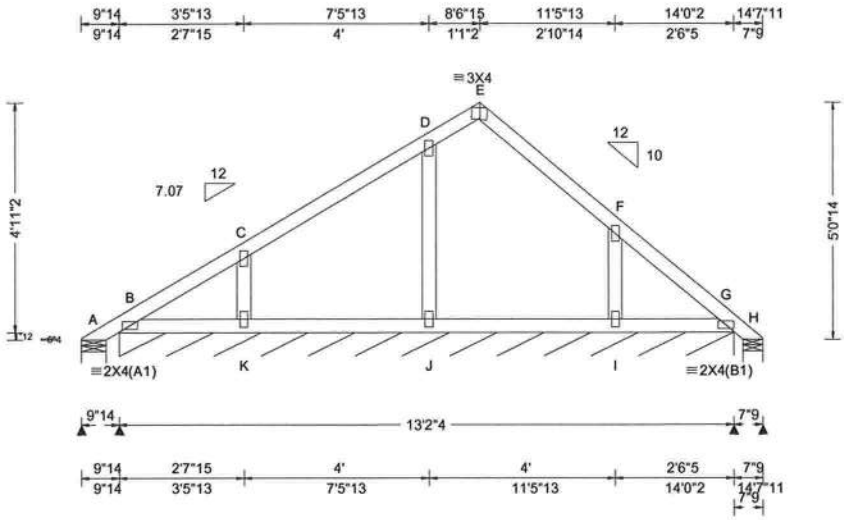

Loading Criteria (psf)

TCLL:	20.00
TCDL:	10.00
BCLL:	0.00
BCDL:	10.00
Des Ld:	40.00
NCBCLL:	10.00
Soffit:	2.00

Load Duration: 1.25
Spacing: 24.0 "

Wind Criteria
Wind Std: ASCE 7-10
Speed: 130 mph
Enclosure: Closed
Risk Category: II
EXP: C
Mean Height: 24.55 ft
TCDL: 5.0 psf
BCDL: 5.0 psf
MWFRS Parallel Dist: h to 2h
C&C Dist a: 3.00 ft
Loc. from endwall: not in 9.00 ft
GCpi: 0.18
Wind Duration: 1.60

Snow Criteria (Pg,Pf in PSF)
Pg: NA Ct: NA CAT: NA
Pf: NA Ce: NA
Lu: NA Cs: NA
Snow Duration: NA

Code / Misc Criteria
Bldg Code: FBC 2014 RES
TPI Std: 2007
Rep Factors Used: Yes
FT/RT:20(0)/10(0)
Plate Type(s):
WAVE

Defl/CSI Criteria

PP Deflection in	loc	L/defl	L/#
VERT(LL): 0.001	E	999	240
VERT(TL): 0.004	E	999	180
HORZ(LL): 0.001	F	-	-
HORZ(TL): 0.002	F	-	-

Creep Factor: 1.5
Max TC CSI: 0.055
Max BC CSI: 0.046
Max Web CSI: 0.035

VIEW Ver: 16.01.00D.0413.17

▲ Maximum Reactions (lbs), or *=PLF

Loc	R	/ U	/ Rw	/ Rh	/ RL	/ W
A	24	/ 68	/ 91	/ -	/ 153	/ 6.5
B*	88	/ 9	/ 54	/ -	/ -	/ 158
H	22	/ 1	/ 22	/ -	/ -	/ 5.2
K		/ 133				
J		/ 104				
I		/ 147				

Wind reactions based on MWFRS
A Min Brg Width Req = 1.5
B Min Brg Width Req = -
H Min Brg Width Req = 1.5
Bearings A, B, & H are a rigid surface.

Members not listed have forces less than 375#

Lumber
Top chord 2x4 SP M-31
Bot chord 2x4 SP M-31
Webs 2x4 SP M-31

Plating Notes
All plates are 2X4 except as noted.

Wind
Wind loads based on MWFRS with additional C&C member design.

Additional Notes
Refer to DWG PB160101014 for piggyback details.

#0 278
04/14/2017

****WARNING**** READ AND FOLLOW ALL NOTES ON THIS DRAWING!
****IMPORTANT**** FURNISH THIS DRAWING TO ALL CONTRACTORS INCLUDING THE INSTALLERS

Trusses require extreme care in fabricating, handling, shipping, installing and bracing. Refer to and follow the latest edition of BCSI (Building Component Safety Information, by TPI and SBCA) for safety practices prior to performing these functions. Installers shall provide temporary bracing per BCSI. Unless noted otherwise,top chord shall have properly attached structural sheathing and bottom chord shall have a properly attached rigid ceiling. Locations shown for permanent lateral restraint of webs shall have bracing installed per BCSI sections B3, B7, or B10, as applicable. Apply plates to each face of truss and position as shown above and on the Joint Details, unless noted otherwise. Refer to drawings 160A-Z for standard plate positions.

Alpine, a division of ITW Building Components Group Inc. shall not be responsible for any deviation from this drawing,any failure to build the truss in conformance with ANSI/TPI 1, or for handling, shipping, installation and bracing of trusses**A seal on this drawing or cover page listing this drawing, indicates acceptance of professional engineering responsibility solely for the design shown. The suitability and use of this drawing for any structure is the responsibility of the Building Designer per ANSI/TPI 1 Sec.2.**

For more information see this job's general notes page and these web sites: ALPINE: www.alpineitw.com; TPI: www.tpinst.org; SBCA: www.sbcindustry.com; ICC: www.iccsafe.org

ALPINE
AN ITW COMPANY
2400 Lake Orange Dr.
Suite 150
Orlando FL, 32837

Job Number: 16-0982 HUBBART RESIDENCE **Truss Label:** P16	Ply: 1 Qty: 1	SEQN: 467831 / T51 COMN FROM: CDM	Cust: R215 JRef: 1VZZ2150001 DrwNo: 104.17.1308.54107 KM / DF 04/14/2017

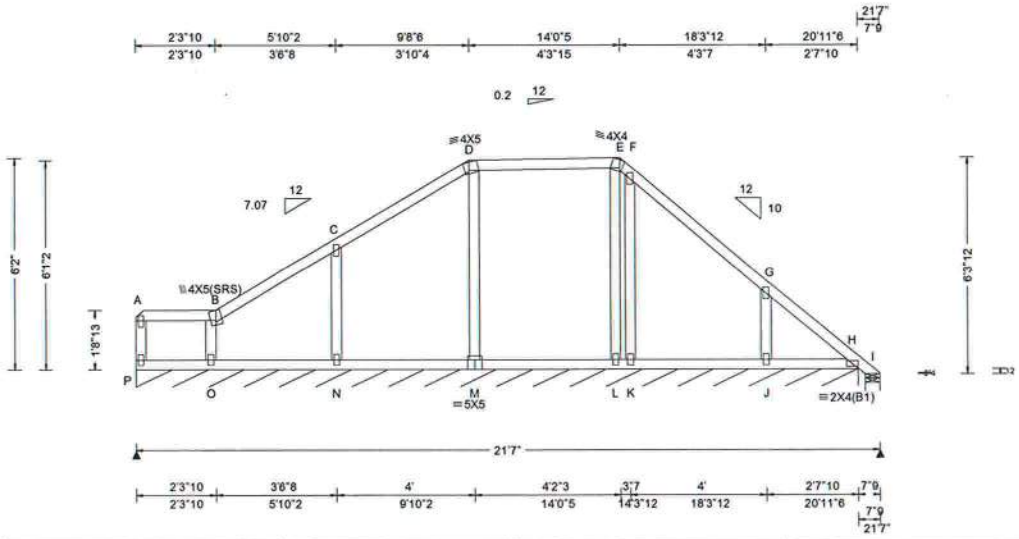

Loading Criteria (psf)	**Wind Criteria**	**Snow Criteria** (Pg,Pf in PSF)	**Defl/CSI Criteria**	**▲ Maximum Reactions (lbs), or *=PLF**
TCLL: 20.00 TCDL: 10.00 BCLL: 0.00 BCDL: 10.00 Des Ld: 40.00 NCBCLL: 10.00 Soffit: 2.00 Load Duration: 1.25 Spacing: 24.0 "	Wind Std: ASE 7-10 Speed: 130 mph Enclosure: Closed Risk Category: II EXP: C Mean Height: 23.17 ft TCDL: 5.0 psf BCDL: 5.0 psf MWFRS Parallel Dist: h to 2h C&C Dist a: 3.00 ft Loc. from endwall: not in 9.00 ft GCpi: 0.18 Wind Duration: 1.60	Pg: NA Ct: NA CAT: NA Pf: NA Ce: NA Lu: NA Cs: NA Snow Duration: NA **Code / Misc Criteria** Bldg Code: FBC 2014 RES TPI Std: 2007 Rep Factors Used: Yes FT/RT:20(0)/10(0) Plate Type(s): WAVE	PP Deflection in loc L/defl L/# VERT(LL): 0.001 F 999 240 VERT(TL): 0.003 D 999 180 HORZ(LL): -0.003 B - - HORZ(TL): -0.006 B - - Creep Factor: 1.5 Max TC CSI: 0.097 Max BC CSI: 0.041 Max Web CSI: 0.096 VIEW Ver: 16.02.01B.0131.17	Loc R / U / Rw / Rh / RL / W P* 84 / 8 / 47 / - / 8 / 251 I 26 / 18 / 30 / - / - / 5.2 Wind reactions based on MWFRS P Min Brg Width Req = - I Min Brg Width Req = 1.5 Bearings P & I are a rigid surface. Members not listed have forces less than 375#

Lumber

Top chord 2x4 SP M-31
Bot chord 2x4 SP M-31
Webs 2x4 SP M-31

Plating Notes

All plates are 2X4 except as noted.

Purlins

In lieu of structural panels use purlins to brace all flat TC @ 24" oc.

Wind

Wind loads based on MWFRS with additional C&C member design.

Additional Notes

Refer to DWG PB160101014 for piggyback details.

DOUGLAS FLEMING
LICENSE
No. 66648
STATE OF
FLORIDA
PROFESSIONAL ENGINEER

#0 278
04/14/2017

****WARNING**** READ AND FOLLOW ALL NOTES ON THIS DRAWING!
****IMPORTANT**** FURNISH THIS DRAWING TO ALL CONTRACTORS INCLUDING THE INSTALLERS

Trusses require extreme care in fabricating, handling, shipping, installing and bracing. Refer to and follow the latest edition of BCSI (Building Component Safety Information, by TPI and SBCA) for safety practices prior to performing these functions. Installers shall provide temporary bracing per BCSI. Unless noted otherwise,top chord shall have properly attached structural sheathing and bottom chord shall have a properly attached rigid ceiling. Locations shown for permanent lateral restraint of webs shall have bracing installed per BCSI sections B3, B7, or B10, as applicable. Apply plates to each face of truss and position as shown above and on the Joint Details, unless noted otherwise. Refer to drawings 160A-Z for standard plate positions.

Alpine, a division of ITW Building Components Group Inc. shall not be responsible for any deviation from this drawing,any failure to build the truss in conformance with ANSI/TPI 1, or for handling, shipping, installation and bracing of trusses**A seal on this drawing or cover page listing this drawing, indicates acceptance of professional engineering responsibility solely for the design shown. The suitability and use of this drawing for any structure is the responsibility of the Building Designer per ANSI/TPI 1 Sec.2.**

For more information see this job's general notes page and these web sites: ALPINE: www.alpineitw.com; TPI: www.tpinst.org; SBCA: www.sbcindustry.com; ICC: www.iccsafe.org

ALPINE
AN ITW COMPANY
2400 Lake Orange Dr.
Suite 150
Orlando FL, 32837

Job Number: 16-0982 HUBBART RESIDENCE **Truss Label:** P17	Ply: 1 Qty: 1	SEQN: 467678 / T125 COMN FROM: CDM	Cust: R215 JRef: 1VZZ2150001 DrwNo: 104.17.1308.56243 KM / DF 04/14/2017

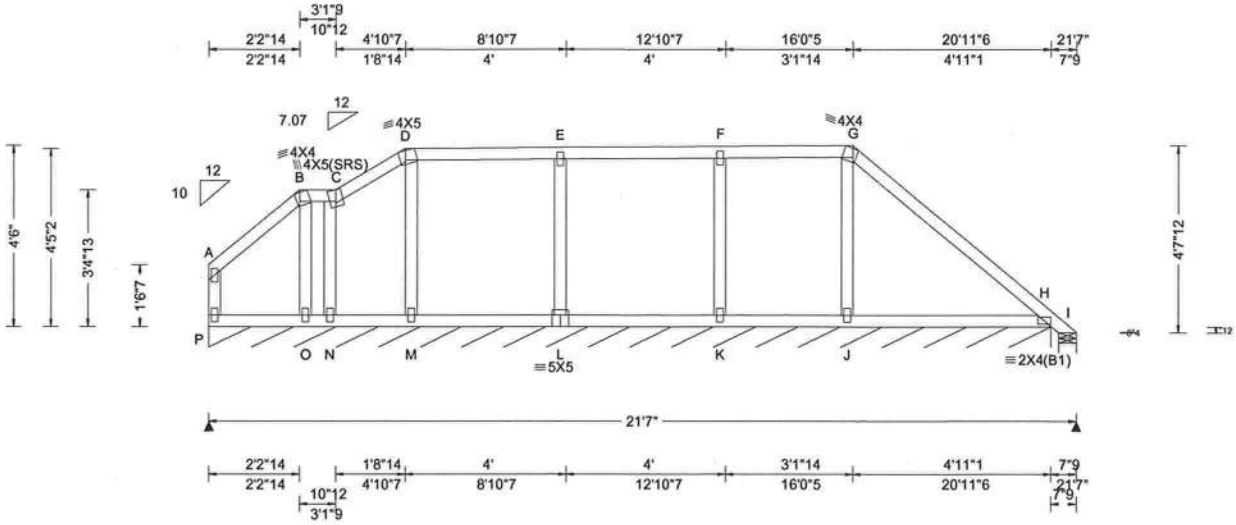

Loading Criteria (psf)	**Wind Criteria**	**Snow Criteria** (Pg,Pf in PSF)	**Defl/CSI Criteria**	**▲ Maximum Reactions (lbs), or *=PLF**
TCLL: 20.00 TCDL: 10.00 BCLL: 0.00 BCDL: 10.00 Des Ld: 40.00 NCBCLL: 10.00 Soffit: 2.00 Load Duration: 1.25 Spacing: 24.0 "	Wind Std: ASCE 7-10 Speed: 130 mph Enclosure: Closed Risk Category: II EXP: C Mean Height: 22.33 ft TCDL: 5.0 psf BCDL: 5.0 psf MWFRS Parallel Dist: h to 2h C&C Dist a: 3.00 ft Loc. from endwall: not in 9.00 ft GCpi: 0.18 Wind Duration: 1.60	Pg: NA Ct: NA CAT: NA Pf: NA Ce: NA Lu: NA Cs: NA Snow Duration: NA **Code / Misc Criteria** Bldg Code: FBC 2014 RES TPI Std: 2007 Rep Factors Used: Yes FT/RT:20(0)/10(0) Plate Type(s): WAVE	PP Deflection in loc L/defl L/# VERT(LL): 0.001 J 999 240 VERT(TL): 0.004 J 999 180 HORZ(LL): -0.003 A - - HORZ(TL): -0.006 A - - Creep Factor: 1.5 Max TC CSI: 0.136 Max BC CSI: 0.084 Max Web CSI: 0.046 VIEW Ver: 16.02.01B.0131.17	Loc R / U / Rw / Rh / RL / W P* 97 / 18 / 55 / - / 6 / 251 I -229 / 229 / 89 / - / - / 5.2 I / 229 Wind reactions based on MWFRS P Min Brg Width Req = - I Min Brg Width Req = 1.5 Bearings P & I are a rigid surface. Members not listed have forces less than 375#

Lumber

Top chord 2x4 SP 2400f-2.0E
Bot chord 2x4 SP 2400f-2.0E
Webs 2x4 SP 2400f-2.0E

Plating Notes

All plates are 2X4 except as noted.

Purlins

In lieu of structural panels use purlins to brace all flat TC @ 24" oc.

Wind

Wind loads based on MWFRS with additional C&C member design.

Additional Notes

Negative reaction(s) of -229# MAX. from a non-wind load case requires uplift connection. See Maximum Reactions.

Refer to DWG PB160101014 for piggyback details.

DOUGLAS FLEMING
LICENSE
No. 66648
STATE OF
FLORIDA
PROFESSIONAL ENGINEER

#0 278

04/14/2017

****WARNING**** READ AND FOLLOW ALL NOTES ON THIS DRAWING!
****IMPORTANT**** FURNISH THIS DRAWING TO ALL CONTRACTORS INCLUDING THE INSTALLERS

Trusses require extreme care in fabricating, handling, shipping, installing and bracing. Refer to and follow the latest edition of BCSI (Building Component Safety Information, by TPI and SBCA) for safety practices prior to performing these functions. Installers shall provide temporary bracing per BCSI. Unless noted otherwise,top chord shall have properly attached structural sheathing and bottom chord shall have a properly attached rigid ceiling. Locations shown for permanent lateral restraint of webs shall have bracing installed per BCSI sections B3, B7, or B10, as applicable. Apply plates to each face of truss and position as shown above and on the Joint Details, unless noted otherwise. Refer to drawings 160A-Z for standard plate positions.

Alpine, a division of ITW Building Components Group Inc. shall not be responsible for any deviation from this drawing,any failure to build the truss in conformance with ANSI/TPI 1, or for handling, shipping, installation and bracing of trusses**A seal on this drawing or cover page listing this drawing, indicates acceptance of professional engineering responsibility solely for the design shown. The suitability and use of this drawing for any structure is the responsibility of the Building Designer per ANSI/TPI 1 Sec.2.**

For more information see this job's general notes page and these web sites: ALPINE: www.alpineitw.com; TPI: www.tpinst.org; SBCA: www.sbcindustry.com; ICC: www.iccsafe.org

ALPINE
AN ITW COMPANY
2400 Lake Orange Dr.
Suite 150
Orlando FL, 32837

Job Number: 16-0982 HUBBART RESIDENCE **Truss Label:** P18	Ply: 1 Qty: 1	SEQN: 467675 / T96 COMN FROM: CDM	Cust: R215 JRef: 1VZZ2150001 DrwNo: 104.17.1309.02233 KM / DF 04/14/2017

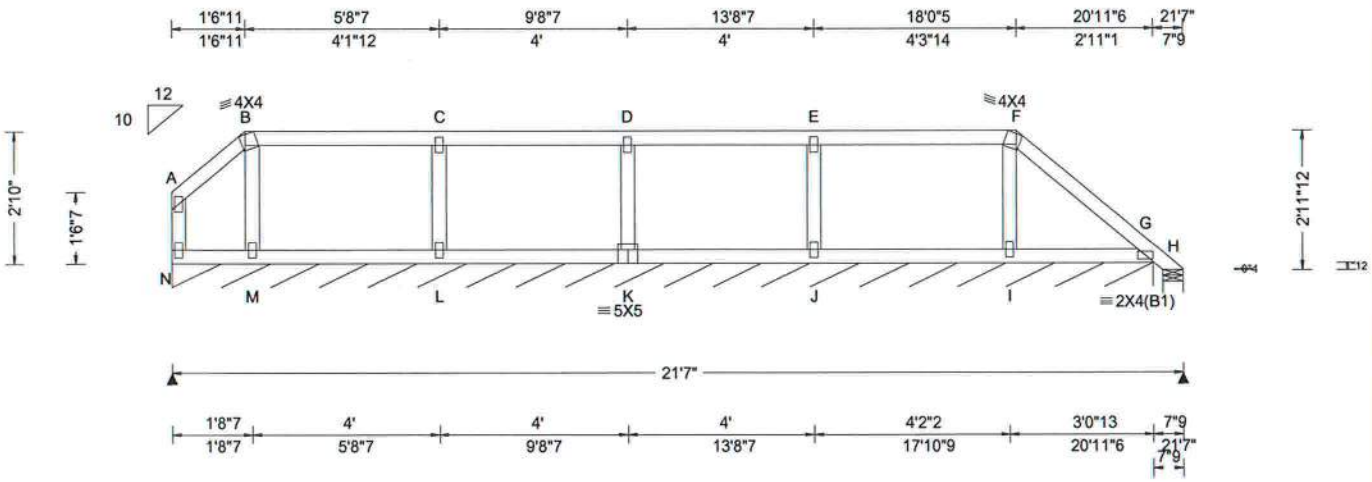

Loading Criteria (psf)

TCLL:	20.00
TCDL:	10.00
BCLL:	0.00
BCDL:	10.00
Des Ld:	40.00
NCBCLL:	10.00
Soffit:	2.00

Load Duration: 1.25
Spacing: 24.0 "

Wind Criteria
Wind Std: ASCE 7-10
Speed: 130 mph
Enclosure: Closed
Risk Category: II
EXP: C
Mean Height: 21.50 ft
TCDL: 5.0 psf
BCDL: 5.0 psf
MWFRS Parallel Dist: h to 2h
C&C Dist a: 3.00 ft
Loc. from endwall: not in 9.00 ft
GCpi: 0.18
Wind Duration: 1.60

Snow Criteria (Pg,Pf in PSF)
Pg: NA Ct: NA CAT: NA
Pf: NA Ce: NA
Lu: NA Cs: NA
Snow Duration: NA

Code / Misc Criteria
Bldg Code: FBC 2014 RES
TPI Std: 2007
Rep Factors Used: Yes
FT/RT:20(0)/10(0)
Plate Type(s):
WAVE

Defl/CSI Criteria

PP Deflection in	loc	L/defl	L/#
VERT(LL): 0.000	C	999	240
VERT(TL): 0.001	C	999	180
HORZ(LL): -0.001	A	-	-
HORZ(TL): -0.002	A	-	-

Creep Factor: 1.5
Max TC CSI: 0.132
Max BC CSI: 0.055
Max Web CSI: 0.029

VIEW Ver: 16.02.01B.0131.17

▲ Maximum Reactions (lbs), or *=PLF

Loc	R	/ U	/ Rw	/ Rh	/ RL	/ W
N*	89	/ 16	/ 46	/ -	/ 4	/ 251
H	7	/ 28	/ 28	/ -	/ -	/ 5.2

Wind reactions based on MWFRS
N Min Brg Width Req = -
H Min Brg Width Req = 1.5
Bearings N & H are a rigid surface.

Members not listed have forces less than 375#

Lumber
Top chord 2x4 SP 2400f-2.0E
Bot chord 2x4 SP 2400f-2.0E
Webs 2x4 SP 2400f-2.0E

Plating Notes
All plates are 2X4 except as noted.

Purlins
In lieu of structural panels use purlins to brace all flat TC @ 24" oc.

Wind
Wind loads based on MWFRS with additional C&C member design.

Additional Notes
Refer to DWG PB160101014 for piggyback details.

#0 278
04/14/2017

****WARNING**** READ AND FOLLOW ALL NOTES ON THIS DRAWING!
****IMPORTANT**** FURNISH THIS DRAWING TO ALL CONTRACTORS INCLUDING THE INSTALLERS

Trusses require extreme care in fabricating, handling, shipping, installing and bracing. Refer to and follow the latest edition of BCSI (Building Component Safety Information, by TPI and SBCA) for safety practices prior to performing these functions. Installers shall provide temporary bracing per BCSI. Unless noted otherwise,top chord shall have properly attached structural sheathing and bottom chord shall have a properly attached rigid ceiling. Locations shown for permanent lateral restraint of webs shall have bracing installed per BCSI sections B3, B7, or B10, as applicable. Apply plates to each face of truss and position as shown above and on the Joint Details, unless noted otherwise. Refer to drawings 160A-Z for standard plate positions.

Alpine, a division of ITW Building Components Group Inc. shall not be responsible for any deviation from this drawing,any failure to build the truss in conformance with ANSI/TPI 1, or for handling, shipping, installation and bracing of trusses**A seal on this drawing or cover page listing this drawing, indicates acceptance of professional engineering responsibility solely for the design shown. The suitability and use of this drawing for any structure is the responsibility of the Building Designer per ANSI/TPI 1 Sec.2.**

For more information see this job's general notes page and these web sites: ALPINE: www.alpineitw.com; TPI: www.tpinst.org; SBCA: www.sbcindustry.com; ICC: www.iccsafe.org

ALPINE
AN ITW COMPANY
2400 Lake Orange Dr.
Suite 150
Orlando FL, 32837

Job Number: 16-0982 HUBBART RESIDENCE **Truss Label:** P19	Ply: 2 Qty: 1	SEQN: 467672 / T84 COMN FROM: CDM	Cust: R215 JRef: 1VZZ2150001 DrwNo: 104.17.1309.03463 KM / DF 04/14/2017

2 Complete Trusses Required

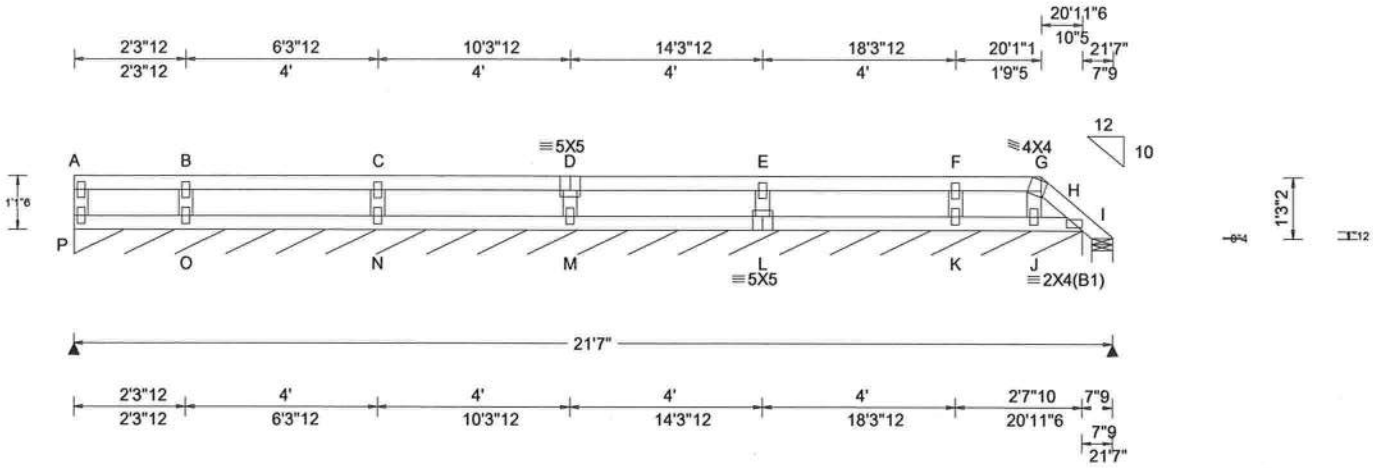

Loading Criteria (psf)	**Wind Criteria**	**Snow Criteria** (Pg,Pf in PSF)	**Defl/CSI Criteria**	**▲ Maximum Reactions (lbs), or *=PLF**
TCLL: 20.00 TCDL: 10.00 BCLL: 0.00 BCDL: 10.00 Des Ld: 40.00 NCBCLL: 10.00 Soffit: 2.00 Load Duration: 1.25 Spacing: 24.0 "	Wind Std: ASCE 7-10 Speed: 130 mph Enclosure: Closed Risk Category: II EXP: C Mean Height: 20.64 ft TCDL: 5.0 psf BCDL: 5.0 psf MWFRS Parallel Dist: h to 2h C&C Dist a: 3.00 ft Loc. from endwall: not in 9.00 ft GCpi: 0.18 Wind Duration: 1.60	Pg: NA Ct: NA CAT: NA Pf: NA Ce: NA Lu: NA Cs: NA Snow Duration: NA **Code / Misc Criteria** Bldg Code: FBC 2014 RES TPI Std: 2007 Rep Factors Used: Yes FT/RT:20(0)/10(0) Plate Type(s): WAVE	PP Deflection in loc L/defl L/# VERT(LL): 0.000 E 999 240 VERT(TL): 0.000 C 999 180 HORZ(LL): 0.000 J - - HORZ(TL): 0.000 J - - Creep Factor: 1.5 Max TC CSI: 0.055 Max BC CSI: 0.025 Max Web CSI: 0.011 VIEW Ver: 16.02.01B.0131.17	Loc R / U / Rw / Rh / RL / W P* 87 / 19 / 42 / - / 1 / 251 I 23 / 2 / 20 / - / - / 5.2 Wind reactions based on MWFRS P Min Brg Width Req = - I Min Brg Width Req = 1.5 Bearings P & I are a rigid surface. Members not listed have forces less than 375#

Lumber

Top chord 2x4 SP 2400f-2.0E
Bot chord 2x4 SP 2400f-2.0E
Webs 2x4 SP 2400f-2.0E

Nailnote

Nail Schedule:0.131"x3", min. nails
Top Chord: 1 Row @12.00" o.c.
Bot Chord: 1 Row @12.00" o.c.
Webs : 1 Row @ 4" o.c.
Use equal spacing between rows and stagger nails in each row to avoid splitting.

Plating Notes

All plates are 2X4 except as noted.

Purlins

In lieu of structural panels use purlins to brace all flat TC @ 24" oc.

Wind

Wind loads based on MWFRS with additional C&C member design.

Additional Notes

Refer to DWG PB160101014 for piggyback details.

DOUGLAS FLEMING
LICENSE
No. 66648
STATE OF
FLORIDA
PROFESSIONAL ENGINEER

#0 278

04/14/2017

****WARNING**** READ AND FOLLOW ALL NOTES ON THIS DRAWING!
****IMPORTANT**** FURNISH THIS DRAWING TO ALL CONTRACTORS INCLUDING THE INSTALLERS

Trusses require extreme care in fabricating, handling, shipping, installing and bracing. Refer to and follow the latest edition of BCSI (Building Component Safety Information, by TPI and SBCA) for safety practices prior to performing these functions. Installers shall provide temporary bracing per BCSI. Unless noted otherwise,top chord shall have properly attached structural sheathing and bottom chord shall have a properly attached rigid ceiling. Locations shown for permanent lateral restraint of webs shall have bracing installed per BCSI sections B3, B7, or B10, as applicable. Apply plates to each face of truss and position as shown above and on the Joint Details, unless noted otherwise. Refer to drawings 160A-Z for standard plate positions.

Alpine, a division of ITW Building Components Group Inc. shall not be responsible for any deviation from this drawing,any failure to build the truss in conformance with ANSI/TPI 1, or for handling, shipping, installation and bracing of trusses**A seal on this drawing or cover page listing this drawing, indicates acceptance of professional engineering responsibility solely for the design shown. The suitability and use of this drawing for any structure is the responsibility of the Building Designer per ANSI/TPI 1 Sec.2.**

For more information see this job's general notes page and these web sites: ALPINE: www.alpineitw.com; TPI: www.tpinst.org; SBCA: www.sbcindustry.com; ICC: www.iccsafe.org

ALPINE
AN ITW COMPANY
2400 Lake Orange Dr.
Suite 150
Orlando FL, 32837

Job Number: 16-0982 HUBBART RESIDENCE **Truss Label:** P20	Ply: 1 Qty: 1	SEQN: 467761 / T83 MONO FROM: CDM	Cust: R215 JRef: 1VZZ2150001 DrwNo: 104.17.1309.07483 KM / DF 04/14/2017

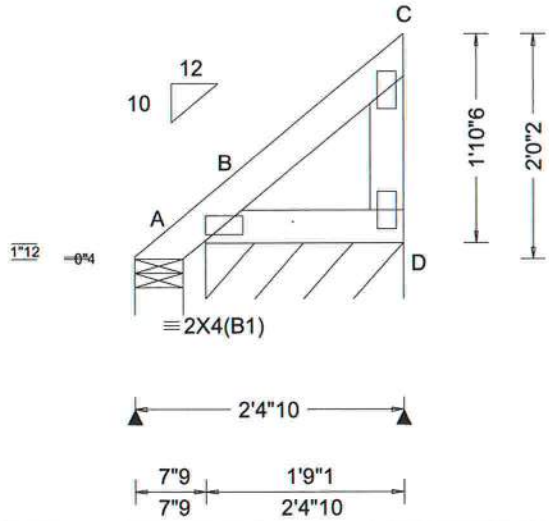

Loading Criteria (psf)
TCLL: 20.00
TCDL: 10.00
BCLL: 0.00
BCDL: 10.00
Des Ld: 40.00
NCBCLL: 10.00
Soffit: 2.00
Load Duration: 1.25
Spacing: 24.0 "

Wind Criteria
Wind Std: ASCE 7-10
Speed: 130 mph
Enclosure: Closed
Risk Category: II
EXP: C
Mean Height: 22.02 ft
TCDL: 5.0 psf
BCDL: 5.0 psf
MWFRS Parallel Dist: > 2h
C&C Dist a: 3.00 ft
Loc. from endwall: not in 9.00 ft
GCpi: 0.18
Wind Duration: 1.60

Snow Criteria (Pg,Pf in PSF)
Pg: NA Ct: NA CAT: NA
Pf: NA Ce: NA
Lu: NA Cs: NA
Snow Duration: NA

Code / Misc Criteria
Bldg Code: FBC 2014 RES
TPI Std: 2007
Rep Factors Used: Yes
FT/RT:20(0)/10(0)
Plate Type(s):
WAVE

Defl/CSI Criteria
PP Deflection in loc L/defl L/#
VERT(LL): NA
VERT(TL): NA
HORZ(LL): 0.000 D - -
HORZ(TL): 0.000 D - -
Creep Factor: 1.5
Max TC CSI: 0.012
Max BC CSI: 0.010
Max Web CSI: 0.004

VIEW Ver: 16.02.01B.0131.17

▲ Maximum Reactions (lbs), or *=PLF

Loc	R	/ U	/ Rw	/ Rh	/ RL	/ W
A	11	/ 11	/ 35	/ -	/ 41	/ 5.2
B*	104	/ 23	/ 85	/ -	/ -	/ 21.1

Wind reactions based on MWFRS
A Min Brg Width Req = 1.5
B Min Brg Width Req = -
Bearings A & B are a rigid surface.

Members not listed have forces less than 375#

Lumber
Top chord 2x4 SP M-31
Bot chord 2x4 SP M-31
Webs 2x4 SP M-31

Plating Notes
All plates are 2X4 except as noted.

Wind
Wind loads based on MWFRS with additional C&C member design.

Additional Notes
Refer to DWG PB160101014 for piggyback details.

#0 278
04/14/2017

****WARNING**** READ AND FOLLOW ALL NOTES ON THIS DRAWING!
****IMPORTANT**** FURNISH THIS DRAWING TO ALL CONTRACTORS INCLUDING THE INSTALLERS

Trusses require extreme care in fabricating, handling, shipping, installing and bracing. Refer to and follow the latest edition of BCSI (Building Component Safety Information, by TPI and SBCA) for safety practices prior to performing these functions. Installers shall provide temporary bracing per BCSI. Unless noted otherwise,top chord shall have properly attached structural sheathing and bottom chord shall have a properly attached rigid ceiling. Locations shown for permanent lateral restraint of webs shall have bracing installed per BCSI sections B3, B7, or B10, as applicable. Apply plates to each face of truss and position as shown above and on the Joint Details, unless noted otherwise. Refer to drawings 160A-Z for standard plate positions.

Alpine, a division of ITW Building Components Group Inc. shall not be responsible for any deviation from this drawing,any failure to build the truss in conformance with ANSI/TPI 1, or for handling, shipping, installation and bracing of trusses**A seal on this drawing or cover page listing this drawing, indicates acceptance of professional engineering responsibility solely for the design shown. The suitability and use of this drawing for any structure is the responsibility of the Building Designer per ANSI/TPI 1 Sec.2.**

For more information see this job's general notes page and these web sites: ALPINE: www.alpineitw.com; TPI: www.tpinst.org; SBCA: www.sbcindustry.com; ICC: www.iccsafe.org

ALPINE AN ITW COMPANY
2400 Lake Orange Dr.
Suite 150
Orlando FL, 32837

Job Number: 16-0982 HUBBART RESIDENCE **Truss Label:** P21	Ply: 1 Qty: 1	SEQN: 468264 / T94 SPEC FROM: CDM	Cust: R215 JRef: 1VZZ2150001 DrwNo: 104.17.1309.08540 KM / DF 04/14/2017

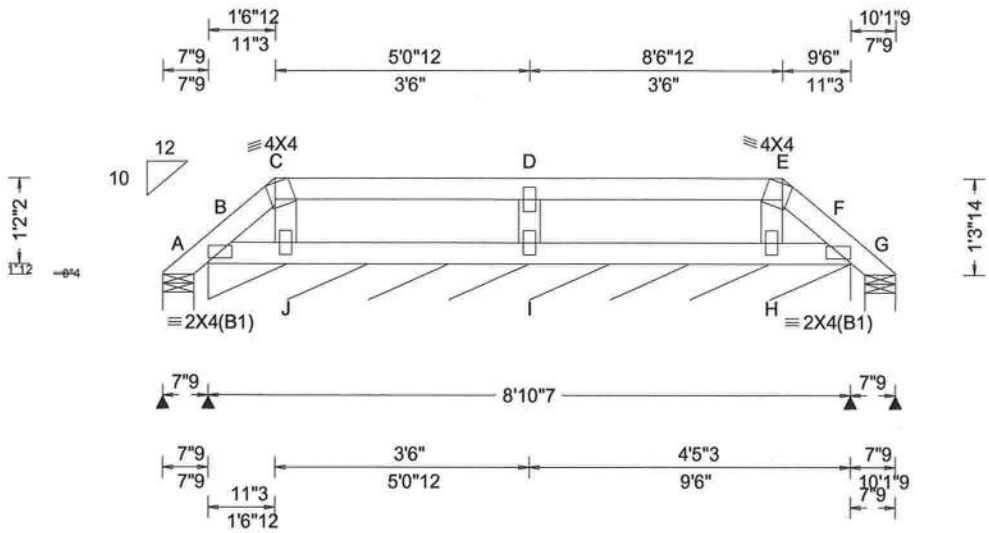

Loading Criteria (psf)

TCLL:	20.00
TCDL:	10.00
BCLL:	0.00
BCDL:	10.00
Des Ld:	40.00
NCBCLL:	10.00
Soffit:	2.00

Load Duration: 1.25
Spacing: 24.0 "

Wind Criteria
Wind Std: ASCE 7-10
Speed: 130 mph
Enclosure: Closed
Risk Category: II
EXP: C
Mean Height: 20.58 ft
TCDL: 5.0 psf
BCDL: 5.0 psf
MWFRS Parallel Dist: h/2 to h
C&C Dist a: 3.00 ft
Loc. from endwall: not in 9.00 ft
GCpi: 0.18
Wind Duration: 1.60

Snow Criteria (Pg,Pf in PSF)
Pg: NA Ct: NA CAT: NA
Pf: NA Ce: NA
Lu: NA Cs: NA
Snow Duration: NA

Code / Misc Criteria
Bldg Code: FBC 2014 RES
TPI Std: 2007
Rep Factors Used: Yes
FT/RT:20(0)/10(0)
Plate Type(s):
WAVE

Defl/CSI Criteria

PP Deflection in	loc	L/defl	L/#
VERT(LL): 0.000	D	999	240
VERT(TL): 0.000	D	999	180
HORZ(LL): 0.000	H	-	-
HORZ(TL): 0.000	H	-	-

Creep Factor: 1.5
Max TC CSI: 0.069
Max BC CSI: 0.031
Max Web CSI: 0.020

VIEW Ver: 16.02.01B.0131.17

▲ Maximum Reactions (lbs), or *=PLF

Loc	R	/ U	/ Rw	/ Rh	/ RL	/ W
A	22	/ 17	/ 34	/ -	/ 35	/ 5.2
B*	89	/ 18	/ 47	/ -	/ -	/ 106
G	24	/ 6	/ 20	/ -	/ -	/ 5.2
I		/ 139				

Wind reactions based on MWFRS
A Min Brg Width Req = 1.5
B Min Brg Width Req = -
G Min Brg Width Req = 1.5
Bearings A, B, & G are a rigid surface.

Members not listed have forces less than 375#

Lumber

Top chord 2x4 SP M-31
Bot chord 2x4 SP M-31
Webs 2x4 SP M-31

Plating Notes

All plates are 2X4 except as noted.

Purlins

In lieu of structural panels use purlins to brace all flat TC @ 24" oc.

Wind

Wind loads based on MWFRS with additional C&C member design.

Additional Notes

Refer to DWG PB160101014 for piggyback details.

#0 278

04/14/2017

****WARNING**** READ AND FOLLOW ALL NOTES ON THIS DRAWING!
****IMPORTANT**** FURNISH THIS DRAWING TO ALL CONTRACTORS INCLUDING THE INSTALLERS

Trusses require extreme care in fabricating, handling, shipping, installing and bracing. Refer to and follow the latest edition of BCSI (Building Component Safety Information, by TPI and SBCA) for safety practices prior to performing these functions. Installers shall provide temporary bracing per BCSI. Unless noted otherwise,top chord shall have properly attached structural sheathing and bottom chord shall have a properly attached rigid ceiling. Locations shown for permanent lateral restraint of webs shall have bracing installed per BCSI sections B3, B7, or B10, as applicable. Apply plates to each face of truss and position as shown above and on the Joint Details, unless noted otherwise. Refer to drawings 160A-Z for standard plate positions.

Alpine, a division of ITW Building Components Group Inc. shall not be responsible for any deviation from this drawing,any failure to build the truss in conformance with ANSI/TPI 1, or for handling, shipping, installation and bracing of trusses**A seal on this drawing or cover page listing this drawing, indicates acceptance of professional engineering responsibility solely for the design shown. The suitability and use of this drawing for any structure is the responsibility of the Building Designer per ANSI/TPI 1 Sec.2.**

For more information see this job's general notes page and these web sites: ALPINE: www.alpineitw.com; TPI: www.tpinst.org; SBCA: www.sbcindustry.com; ICC: www.iccsafe.org

ALPINE
AN ITW COMPANY
2400 Lake Orange Dr.
Suite 150
Orlando FL, 32837

Job Number: 16-0982 HUBBART RESIDENCE **Truss Label:** R01	Ply: 1 Qty: 1	SEQN: 455419 / T2 GABL FROM: CDM	Cust: R215 JRef: 1VZZ2150001 DrwNo: 104.17.1309.09737 KM / DF 04/14/2017

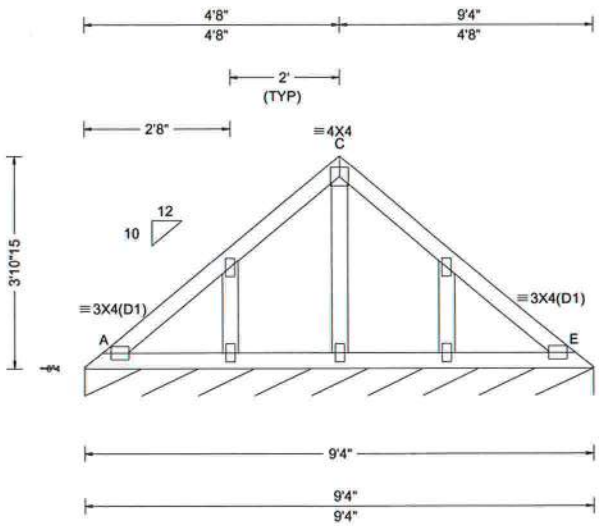

Loading Criteria (psf)	**Wind Criteria**	**Snow Criteria** (Pg,Pf in PSF)	**Defl/CSI Criteria**	**▲ Maximum Reactions (lbs), or *=PLF**
TCLL: 20.00 TCDL: 10.00 BCLL: 0.00 BCDL: 10.00 Des Ld: 40.00 NCBCLL: 10.00 Soffit: 2.00 Load Duration: 1.25 Spacing: 24.0 "	Wind Std: ASCE 7-10 Speed: 130 mph Enclosure: Closed Risk Category: II EXP: C Mean Height: 15.00 ft TCDL: 5.0 psf BCDL: 5.0 psf MWFRS Parallel Dist: 0 to h/2 C&C Dist a: 3.00 ft Loc. from endwall: Any GCpi: 0.18 Wind Duration: 1.60	Pg: NA Ct: NA CAT: NA Pf: NA Ce: NA Lu: NA Cs: NA Snow Duration: NA **Code / Misc Criteria** Bldg Code: FBC 2014 RES TPI Std: 2007 Rep Factors Used: Yes FT/RT:20(0)/10(0) Plate Type(s): WAVE	PP Deflection in loc L/defl L/# VERT(LL): 0.001 H 999 240 VERT(TL): 0.003 H 999 180 HORZ(LL): -0.001 F - - HORZ(TL): -0.002 F - - Creep Factor: 1.5 Max TC CSI: 0.031 Max BC CSI: 0.019 Max Web CSI: 0.018 VIEW Ver: 16.01.00D.0413.17	Loc R / U / Rw / Rh / RL / W E* 86 / 10 / 47 / - / 11 / 111 Wind reactions based on MWFRS A Min Brg Width Req = - Bearing A is a rigid surface. Members not listed have forces less than 375#

Lumber

Top chord 2x4 SP M-31
Bot chord 2x4 SP M-31
Webs 2x4 SP M-31

Plating Notes

All plates are 2X4 except as noted.

Wind

Wind loads based on MWFRS with additional C&C member design.

Additional Notes

See DWGS S14015ENC100815 & GBLLETIN1014 for gable wind bracing and other requirements.

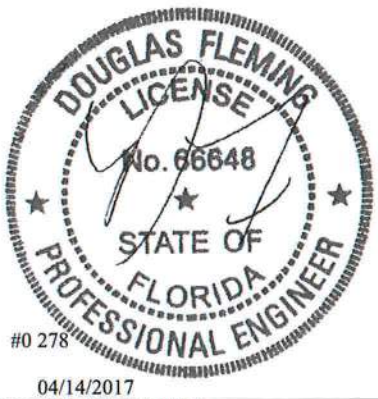

#0 278

04/14/2017

****WARNING**** READ AND FOLLOW ALL NOTES ON THIS DRAWING!
****IMPORTANT**** FURNISH THIS DRAWING TO ALL CONTRACTORS INCLUDING THE INSTALLERS

Trusses require extreme care in fabricating, handling, shipping, installing and bracing. Refer to and follow the latest edition of BCSI (Building Component Safety Information, by TPI and SBCA) for safety practices prior to performing these functions. Installers shall provide temporary bracing per BCSI. Unless noted otherwise,top chord shall have properly attached structural sheathing and bottom chord shall have a properly attached rigid ceiling. Locations shown for permanent lateral restraint of webs shall have bracing installed per BCSI sections B3, B7, or B10, as applicable. Apply plates to each face of truss and position as shown above and on the Joint Details, unless noted otherwise. Refer to drawings 160A-Z for standard plate positions.

Alpine, a division of ITW Building Components Group Inc. shall not be responsible for any deviation from this drawing,any failure to build the truss in conformance with ANSI/TPI 1, or for handling, shipping, installation and bracing of trusses**A seal on this drawing or cover page listing this drawing, indicates acceptance of professional engineering responsibility solely for the design shown. The suitability and use of this drawing for any structure is the responsibility of the Building Designer per ANSI/TPI 1 Sec.2.**

For more information see this job's general notes page and these web sites: ALPINE: www.alpineitw.com; TPI: www.tpinst.org; SBCA: www.sbcindustry.com; ICC: www.iccsafe.org

ALPINE
AN ITW COMPANY
2400 Lake Orange Dr.
Suite 150
Orlando FL, 32837

Job Number: 16-0982 HUBBART RESIDENCE **Truss Label:** R02	Ply: 1 Qty: 1	SEQN: 468478 / T37 COMN FROM: CDM	Cust: R215 JRef: 1VZZ2150001 DrwNo: 104.17.1309.12480 KM / DF 04/14/2017

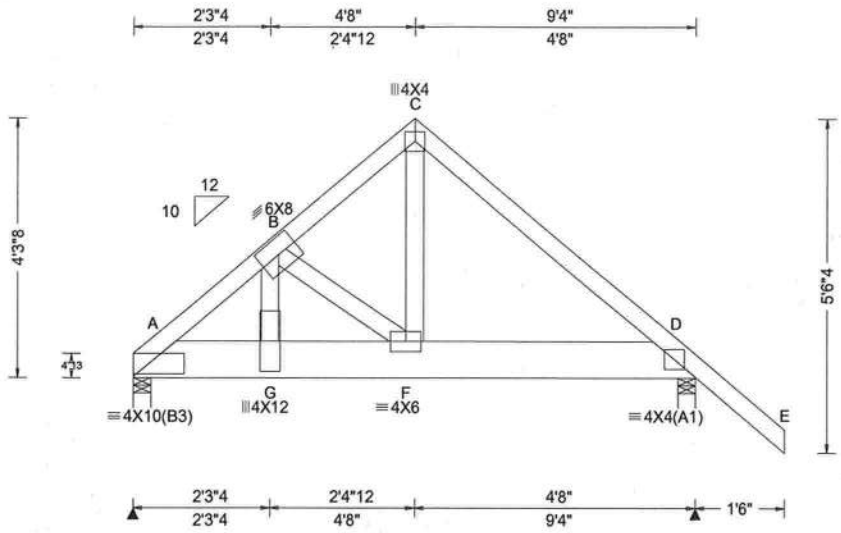

Loading Criteria (psf)
TCLL: 20.00
TCDL: 10.00
BCLL: 0.00
BCDL: 10.00
Des Ld: 40.00
NCBCLL: 10.00
Soffit: 2.00
Load Duration: 1.25
Spacing: 24.0 "

Wind Criteria
Wind Std: ASCE 7-10
Speed: 130 mph
Enclosure: Closed
Risk Category: II
EXP: C
Mean Height: 15.00 ft
TCDL: 5.0 psf
BCDL: 5.0 psf
MWFRS Parallel Dist: 0 to h/2
C&C Dist a: 3.00 ft
Loc. from endwall: not in 4.50 ft
GCpi: 0.18
Wind Duration: 1.60

Snow Criteria (Pg,Pf in PSF)
Pg: NA Ct: NA CAT: NA
Pf: NA Ce: NA
Lu: NA Cs: NA
Snow Duration: NA

Code / Misc Criteria
Bldg Code: FBC 2014 RES
TPI Std: 2007
Rep Factors Used: Yes
FT/RT:20(0)/10(0)
Plate Type(s):
WAVE

Defl/CSI Criteria

PP Deflection in	loc	L/defl	L/#
VERT(LL): 0.022	G	999	240
VERT(TL): 0.056	G	999	180
HORZ(LL): 0.007	B	-	-
HORZ(TL): 0.019	B	-	-

Creep Factor: 1.5
Max TC CSI: 0.122
Max BC CSI: 0.282
Max Web CSI: 0.248

VIEW Ver: 16.02.01B.0131.17

▲Maximum Reactions (lbs)

Loc	R	/ U	/ Rw	/ Rh	/ RL	/ W
A	2798	/ 663	/ -	/ -	/ -	/ 3.5
D	1259	/ 297	/ -	/ -	/ -	/ 3.5

Wind reactions based on MWFRS
A Min Brg Width Req = 2.3
D Min Brg Width Req = 1.5
Bearings A & D are a rigid surface.

Members not listed have forces less than 375#

Maximum Top Chord Forces Per Ply (lbs)

Chords	Tens.Comp.	Chords	Tens. Comp.
A - B	889 - 3706	C - D	367 - 1530
B - C	361 - 1547		

Maximum Bot Chord Forces Per Ply (lbs)

Chords	Tens.Comp.	Chords	Tens. Comp.
A - G	2811 - 671	F - D	1109 - 255
G - F	2737 - 654		

Maximum Web Forces Per Ply (lbs)

Webs	Tens.Comp.	Webs	Tens. Comp.
G - B	2607 - 623	F - C	1646 - 345
B - F	503 - 2043		

Lumber
Top chord 2x4 SP M-31
Bot chord 2x8 SP M-31
Webs 2x4 SP M-31

Special Loads
-----(Lumber Dur.Fac.=1.25 / Plate Dur.Fac.=1.25)
TC- From 66 plf at 0.00 to 66 plf at 4.67
TC- From 66 plf at 4.67 to 66 plf at 10.83
BC- From 20 plf at 0.00 to 20 plf at 9.33
BC- From 5 plf at 9.33 to 5 plf at 10.83
BC- 3147 lb Conc. Load at 2.27

Wind
Wind loads and reactions based on MWFRS.

04/14/2017

****WARNING**** READ AND FOLLOW ALL NOTES ON THIS DRAWING!
****IMPORTANT**** FURNISH THIS DRAWING TO ALL CONTRACTORS INCLUDING THE INSTALLERS

Trusses require extreme care in fabricating, handling, shipping, installing and bracing. Refer to and follow the latest edition of BCSI (Building Component Safety Information, by TPI and SBCA) for safety practices prior to performing these functions. Installers shall provide temporary bracing per BCSI. Unless noted otherwise,top chord shall have properly attached structural sheathing and bottom chord shall have a properly attached rigid ceiling. Locations shown for permanent lateral restraint of webs shall have bracing installed per BCSI sections B3, B7, or B10, as applicable. Apply plates to each face of truss and position as shown above and on the Joint Details, unless noted otherwise. Refer to drawings 160A-Z for standard plate positions.

Alpine, a division of ITW Building Components Group Inc. shall not be responsible for any deviation from this drawing,any failure to build the truss in conformance with ANSI/TPI 1, or for handling, shipping, installation and bracing of trusses**A seal on this drawing or cover page listing this drawing, indicates acceptance of professional engineering responsibility solely for the design shown. The suitability and use of this drawing for any structure is the responsibility of the Building Designer per ANSI/TPI 1 Sec.2.**

For more information see this job's general notes page and these web sites: ALPINE: www.alpineitw.com; TPI: www.tpinst.org; SBCA: www.sbcindustry.com; ICC: www.iccsafe.org

ALPINE
AN ITW COMPANY
2400 Lake Orange Dr.
Suite 150
Orlando FL, 32837

CLR Reinforcing Member Substitution

This detail is to be used when a Continuous Lateral Restraint (CLR) is specified on a truss design but an alternative web reinforcement method is desired.

Notes:

This detail is only applicable for changing the specified CLR shown on single ply sealed designs to T-reinforcement or L-reinforecement or scab reinforcement.

Alternative reinforcement specified in chart below may be conservative. For minimum alternative reinforcement, re-run design with appropriate reinforcement type.

Web Member Size	Specified CLR Restraint	Alternative Reinforecement T- or L- Reinf.	Alternative Reinforecement Scab Reinf.
2x3 or 2x4	1 row	2x4	1-2x4
2x3 or 2x4	2 rows	2x6	2-2x4
2x6	1 row	2x4	1-2x6
2x6	2 rows	2x6	2-2x4(*)
2x8	1 row	2x6	1-2x8
2x8	2 rows	2x6	2-2x6(*)

T-reinforcement, L-reinforcement, or scab reinforcement to be same species and grade or better than web member unless specified otherwise on Engineer's sealed design.

(*) Center scab on wide face of web. Apply (1) scab to each face of web.

T-Reinforcement or L-Reinforcement:

Apply to either side of web narrow face. Attach with 10d (0.128"x3.0",min) nails at 6" o.c. Reinforcing member is a minimum 80% of web member length.

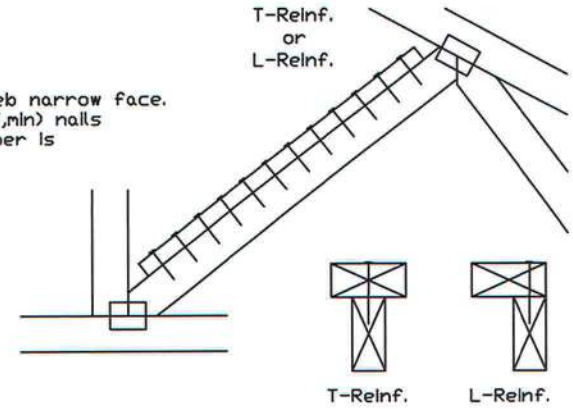

Scab Reinforcement:

Apply scab(s) to wide face of web. No more than (1) scab per face. Attach with 10d (0.128"x3.0",min) nails at 6" o.c. Reinforcing member is a minimum 80% of web member length.

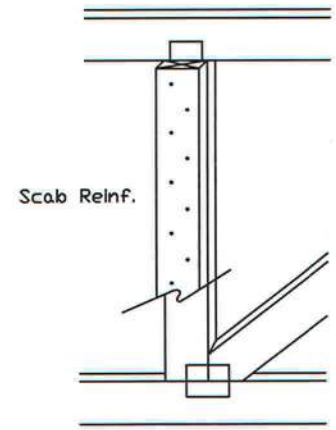

DOUGLAS FLEMING LICENSE No. 66648 STATE OF FLORIDA PROFESSIONAL ENGINEER

ALPINE AN ITW COMPANY

13723 Riverport Drive
Suite 200
Maryland Heights, MO 63043

#0278 04/14/2017

TC LL	PSF	REF CLR Subst.
TC DL	PSF	DATE 10/01/14
BC DL	PSF	DRWG BRCLBSUB1014
BC LL	PSF	
TOT. LD.	PSF	
DUR. FAC.		
SPACING		

Commentary: Deflection and Camber

Camber may be built into trusses to compensate for the vertical deflection that results from the application of loads. Providing camber has the following advantages:

- Helps to ensure level ceilings and floors after dead loads are applied.
- Facilitates drainage to avoid ponding on flat or low slope roofs.
- Compensates for different deflection characteristics between adjacent trusses.
- Improves appearance of garage door headers and other long spans that can appear to 'sag.'
- Avoids 'dips' in roof ridgelines at the transition from the gable to adjacent clear span trusses.

In accordance with ANSI/TPI 1 the Building Designer, through the Construction Documents, shall provide the location, direction, and magnitude of all loads attributable to ponding that may occur due to the design of the roof drainage system. The Building Designer shall also specify any dead load, live load, and in-service creep deflection criteria for flat or low-slope roofs subject to ponding loads.

The amount of camber is dependent on the truss type, span, loading, application, etceteras.

More restrictive limits for allowable deflection and slenderness ratio (L/D) may be required to help control vibration.

The following tables are provided as guidelines for limiting deflection and estimating camber. Conditions or codes may exist that require exceeding these recommendations, or past experience may warrant using more stringent limitations.

L = Span of Truss (inches)
D = Depth of Truss at Deflection Point (inches)

Recommended Truss Deflection Limits

Truss Type	L/D	Deflection Limits: Live Load	Deflection Limits: Total Load
Pitched Roof Trusses	24	L/240 (vertical)	L/180 (vertical)
Floor of Room-In-Attic Trusses	24	L/360 (vertical)	L/240 (vertical)
Flat or Shallow Pitched Roof Trusses	24	L/360 (vertical)	L/240 (vertical)
Residential Floor Trusses	24	L/360 (vertical)	L/240 (vertical)
Commercial Floor Trusses	20	L/480 (vertical)	L/240 (vertical)
Scissors Trusses	24	0.75" (horizontal)	1.25" (horizontal)

Truss Type	Recommended Camber
Pitched Trusses	1.00 x Deflection from Actual Dead Load
Sloping Parallel Chord Trusses	1.5 x Vertical Deflection from Actual Dead Load
Floor Trusses	(0.25 x Deflection from Live Load) + Actual Dead Load
Flat Roof Trusses	(0.25 x Deflection from Live Load) + (1.0 x Design Dead Load Deflection)

Note: The actual dead load may be considerably less than the design dead load.

DOUGLAS FLEMING LICENSE No. 66648 STATE OF FLORIDA PROFESSIONAL ENGINEER #0278 04/14/2017

ALPINE AN ITW COMPANY
13723 Riverport Drive
Suite 200
Maryland Heights, MO 63043

REF	DEFLEC/CAMB
DATE	10/01/14
DRWG	DEFLCAMB1014

Gable Detail

For Let-in Verticals

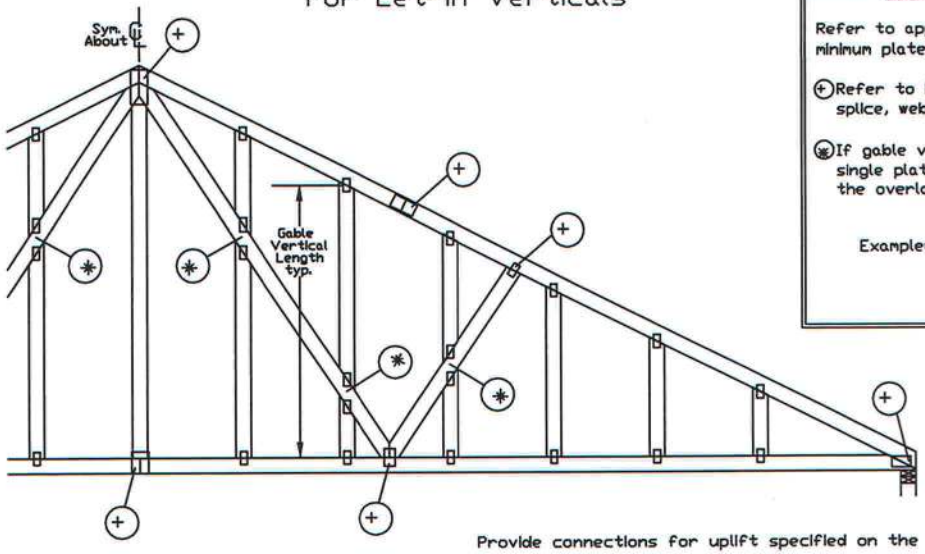

Gable Truss Plate Sizes

Refer to appropriate Alpine gable detail for minimum plate sizes for vertical studs.

(+) Refer to Engineered truss design for peak, splice, web, and heel plates.

(*) If gable vertical plates overlap, use a single plate that covers the total area of the overlapped plates to span the web.

Example:

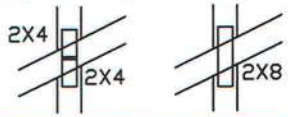

'T' Reinforcement Attachment Detail

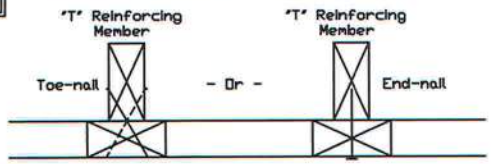

Provide connections for uplift specified on the engineered truss design.

Attach each 'T' reinforcing member with

End Driven Nails:
10d Common (0.148"x 3.",min) Nails at 4' o.c. plus
(4) nails in the top and bottom chords.

Toenailed Nails:
10d Common (0.148"x3",min) Toenails at 4' o.c. plus
(4) toenails in the top and bottom chords.

This detail to be used with the appropriate Alpine gable detail for ASCE wind load.

ASCE 7-05 Gable Detail Drawings
A13015051014, A12015051014, A11015051014, A10015051014, A14015051014,
A13030051014, A12030051014, A11030051014, A10030051014, A14030051014

ASCE 7-10 Gable Detail Drawings
A11515ENC101014, A12015ENC101014, A14015ENC101014, A16015ENC101014,
A18015ENC101014, A20015ENC101014, A20015END101014, A20015PED101014,
A11530ENC101014, A12030ENC101014, A14030ENC101014, A16030ENC101014,
A18030ENC101014, A20030ENC101014, A20030END101014, A20030PED101014,
S11515ENC100815, S12015ENC100815, S14015ENC100815, S16015ENC100815,
S18015ENC100815, S20015ENC100815, S20015END100815, S20015PED100815,
S11530ENC100815, S12030ENC100815, S14030ENC100815, S16030ENC100815,
S18030ENC100815, S20030ENC100815, S20030END100815, S20030PED100815

See appropriate Alpine gable detail for maximum unreinforced gable vertical length.

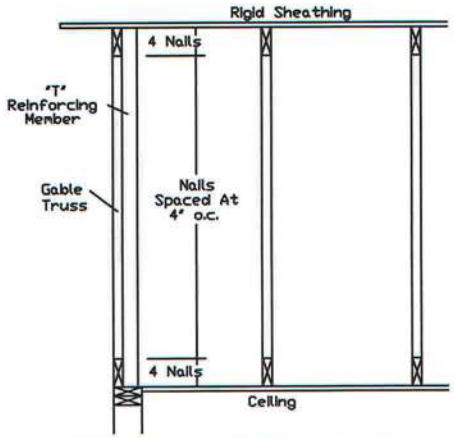

To convert from 'L' to 'T' reinforcing members, multiply 'T' increase by length (based on appropriate Alpine gable detail).

Maximum allowable 'T' reinforced gable vertical length is 14' from top to bottom chord.

'T' reinforcing member material must match size, specie, and grade of the 'L' reinforcing member.

Web Length Increase w/ 'T' Brace

'T' Reinf. Mbr. Size	'T' Increase
2x4	30 %
2x6	20 %

Example:
ASCE 7-10 Wind Speed = 120 mph
Mean Roof Height = 30 ft, Kzt = 1.00
Gable Vertical = 24'o.c. SP #3
'T' Reinforcing Member Size = 2x4
'T' Brace Increase (From Above) = 30% = 1.30
(1) 2x4 'L' Brace Length = 8' 7"
Maximum 'T' Reinforced Gable Vertical Length
1.30 x 8' 7" = 11' 2"

ALPINE™
AN ITW COMPANY

13723 Riverport Drive
Suite 200
Maryland Heights, MO 63043

WARNING! READ AND FOLLOW ALL NOTES ON THIS DRAWING!
IMPORTANT! FURNISH THIS DRAWING TO ALL CONTRACTORS INCLUDING THE INSTALLERS.

Trusses require extreme care in fabricating, handling, shipping, installing and bracing. Refer to and follow the latest edition of BCSI (Building Component Safety Information, by TPI and SBCA) for safety practices prior to performing these functions. Installers shall provide temporary bracing per BCSI. Unless noted otherwise, top chord shall have properly attached structural sheathing and bottom chord shall have a properly attached rigid ceiling. Locations shown for permanent lateral restraint of webs shall have bracing installed per BCSI sections B3, B7 or B10, as applicable. Apply plates to each face of truss and position as shown above and on the Joint Details, unless noted otherwise. Refer to drawings 160A-Z for standard plate positions.

Alpine, a division of ITW Building Components Group Inc. shall not be responsible for any deviation from this drawing, any failure to build the truss in conformance with ANSI/TPI 1, or for handling, shipping, installation & bracing of trusses.

A seal on this drawing or cover page listing this drawing, indicates acceptance of professional engineering responsibility solely for the design shown. The suitability and use of this drawing for any structure is the responsibility of the Building Designer per ANSI/TPI 1 Sec.2.

For more information see this job's general notes page and these web sites:
ALPINE: www.alpineitw.com; TPI: www.tpinst.org; SBCA: www.sbcindustry.org; ICC: www.iccsafe.org

STATE OF FLORIDA
PROFESSIONAL ENGINEER
No. 66648
STEVEN J. FLEMING
#0 278 04/14/2017

MAX. TOT. LD.	60 PSF
DUR. FAC.	ANY
MAX. SPACING	24.0"

REF	LET-IN VERT
DATE	10/01/14
DRWG	GBLLETIN1014

Gable Stud Reinforcement Detail for Stucco Cladding

ASCE 7-10: 140 mph Wind Speed, 15' Mean Height, Enclosed, Exposure C, Kzt = 1.00

Or: 120 mph Wind Speed, 15' Mean Height, Partially Enclosed, Exposure C, Kzt = 1.00
Or: 120 mph Wind Speed, 15' Mean Height, Enclosed, Exposure D, Kzt = 1.00
Or: 100 mph Wind Speed, 15' Mean Height, Partially Enclosed, Exposure D, Kzt = 1.00

Max Gable Vertical Length

2x4 Gable Vertical Spacing	Species	Brace Grade	No Braces	(1) 1x4 'L' Brace * Group A	(1) 1x4 'L' Brace * Group B	(1) 2x4 'L' Brace * Group A	(1) 2x4 'L' Brace * Group B	(2) 2x4 'L' Brace ** Group A	(2) 2x4 'L' Brace ** Group B	(1) 2x6 'L' Brace * Group A	(1) 2x6 'L' Brace * Group B	(2) 2x6 'L' Brace ** Group A	(2) 2x6 'L' Brace ** Group B
24" o.c.	SPF HF	#1 / #2	3' 9"	6' 4"	6' 7"	7' 6"	7' 10"	8' 11"	9' 4"	11' 9"	12' 3"	14' 0"	14' 0"
		#3	3' 7"	6' 3"	6' 6"	7' 5"	7' 8"	8' 10"	9' 2"	11' 7"	12' 1"	13' 10"	14' 0"
		Stud	3' 7"	6' 3"	6' 6"	7' 5"	7' 8"	8' 10"	9' 2"	11' 7"	12' 1"	13' 10"	14' 0"
		Standard	3' 7"	5' 8"	6' 0"	7' 5"	7' 8"	8' 10"	9' 2"	11' 7"	12' 1"	13' 10"	14' 0"
	SP DFL	#1	3' 11"	6' 5"	6' 8"	7' 7"	7' 11"	9' 0"	9' 5"	11' 11"	12' 4"	14' 0"	14' 0"
		#2	3' 9"	6' 4"	6' 7"	7' 6"	7' 10"	8' 11"	9' 4"	11' 9"	12' 3"	14' 0"	14' 0"
		#3	3' 8"	6' 0"	6' 4"	7' 5"	7' 9"	8' 11"	9' 3"	11' 8"	12' 2"	13' 11"	14' 0"
		Stud	3' 8"	6' 0"	6' 4"	7' 5"	7' 9"	8' 11"	9' 3"	11' 8"	12' 2"	13' 11"	14' 0"
		Standard	3' 7"	5' 3"	5' 7"	7' 0"	7' 6"	8' 10"	9' 2"	11' 0"	11' 10"	13' 10"	14' 0"
16" o.c.	SPF HF	#1 / #2	4' 3"	7' 3"	7' 7"	8' 7"	8' 11"	10' 3"	10' 8"	13' 6"	14' 0"	14' 0"	14' 0"
		#3	4' 1"	7' 2"	7' 7"	8' 6"	8' 10"	10' 1"	10' 6"	13' 4"	13' 10"	14' 0"	14' 0"
		Stud	4' 1"	7' 2"	7' 5"	8' 6"	8' 10"	10' 1"	10' 6"	13' 4"	13' 10"	14' 0"	14' 0"
		Standard	4' 1"	6' 11"	7' 5"	8' 6"	8' 10"	10' 1"	10' 6"	13' 4"	13' 10"	14' 0"	14' 0"
	SP DFL	#1	4' 6"	7' 4"	7' 8"	8' 8"	9' 0"	10' 4"	10' 9"	13' 8"	14' 0"	14' 0"	14' 0"
		#2	4' 3"	7' 3"	7' 7"	8' 7"	8' 11"	10' 3"	10' 8"	13' 6"	14' 0"	14' 0"	14' 0"
		#3	4' 2"	7' 3"	7' 6"	8' 6"	8' 10"	10' 2"	10' 7"	13' 5"	13' 11"	14' 0"	14' 0"
		Stud	4' 2"	7' 3"	7' 6"	8' 6"	8' 10"	10' 2"	10' 7"	13' 5"	13' 11"	14' 0"	14' 0"
		Standard	4' 1"	6' 5"	6' 10"	8' 6"	8' 10"	10' 1"	10' 6"	13' 4"	13' 10"	14' 0"	14' 0"
12" o.c.	SPF HF	#1 / #2	4' 8"	8' 0"	8' 4"	9' 5"	9' 10"	10' 3"	11' 9"	14' 0"	14' 0"	14' 0"	14' 0"
		#3	4' 6"	7' 11"	8' 2"	9' 4"	9' 8"	11' 1"	11' 7"	14' 0"	14' 0"	14' 0"	14' 0"
		Stud	4' 6"	7' 11"	8' 2"	9' 4"	9' 8"	11' 1"	11' 7"	14' 0"	14' 0"	14' 0"	14' 0"
		Standard	4' 6"	7' 11"	8' 2"	9' 4"	9' 8"	11' 1"	11' 7"	14' 0"	14' 0"	14' 0"	14' 0"
	SP DFL	#1	4' 11"	8' 1"	8' 5"	9' 7"	9' 11"	11' 4"	11' 10"	14' 0"	14' 0"	14' 0"	14' 0"
		#2	4' 8"	8' 0"	8' 4"	9' 5"	9' 10"	11' 3"	11' 9"	14' 0"	14' 0"	14' 0"	14' 0"
		#3	4' 7"	7' 11"	8' 3"	9' 5"	9' 9"	11' 2"	11' 8"	14' 0"	14' 0"	14' 0"	14' 0"
		Stud	4' 7"	7' 11"	8' 3"	9' 5"	9' 9"	11' 2"	11' 8"	14' 0"	14' 0"	14' 0"	14' 0"
		Standard	4' 6"	7' 5"	7' 11"	9' 4"	9' 8"	11' 1"	11' 7"	14' 0"	14' 0"	14' 0"	14' 0"

Bracing Group Species and Grades:

Group A:

Spruce-Pine-Fir	
#1 / #2	Standard
#3	Stud

Hem-Fir	
#2	Stud
#3	Standard

Douglas Fir-Larch
#3
Stud
Standard

Southern Pine***
#3
Stud
Standard

Group B:

Hem-Fir
#1 & Btr
#1

Douglas Fir-Larch
#1
#2

Southern Pine***
#1
#2

1x4 Braces shall be SRB (Stress-Rated Board).

***For 1x4 So. Pine use only Industrial 55 or Industrial 45 Stress-Rated Boards. Group B values may be used with these grades.

Gable Truss Detail Notes:

Wind Load deflection criterion is L/360.

Provide uplift connections for 55 plf over continuous bearing (5 psf TC Dead Load).

Gable end supports load from 4' 0" outlookers with 2' 0" overhang, or 12" plywood overhang.

Attach 'L' braces with 10d (0.128"x3.0" min) nails.

* For (1) 'L' brace: space nails at 2" o.c. in 18" end zones and 4" o.c. between zones.

** For (2) 'L' braces: space nails at 3" o.c. in 18" end zones and 6" o.c. between zones.

'L' bracing must be a minimum of 80% of web member length.

Gable Vertical Plate Sizes

Vertical Length	No Splice
Less than 4' 0"	1X4 or 2X3
Greater than 4' 0"	3X4

+ Refer to common truss design for peak, splice, and heel plates.

Refer to the Building Designer for conditions not addressed by this detail.

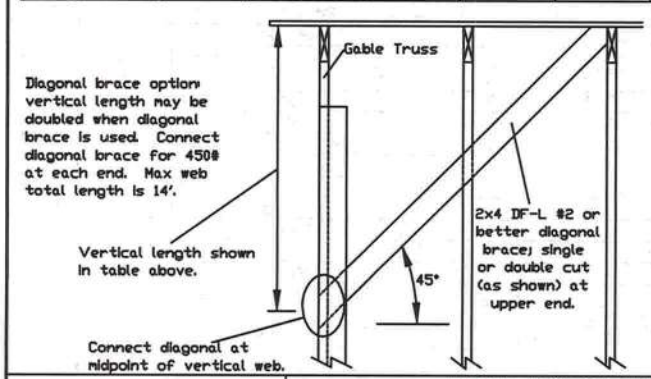

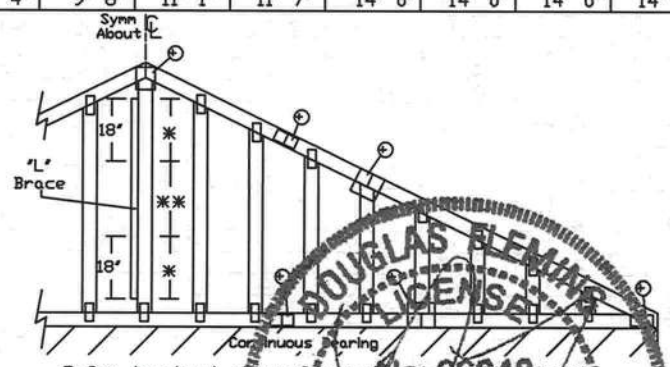

Refer to chart above for max web member length.

ALPINE™ AN ITW COMPANY
13723 Riverport Drive
Suite 200
Maryland Heights, MO 63043

WARNING READ AND FOLLOW ALL NOTES ON THIS DRAWING!
IMPORTANT FURNISH THIS DRAWING TO ALL CONTRACTORS INCLUDING THE INSTALLERS.

Trusses require extreme care in fabricating, handling, shipping, installing and bracing. Refer to and follow the latest edition of BCSI (Building Component Safety Information, by TPI and SBCA) for safety practices prior to performing these functions. Installers shall provide temporary bracing per BCSI. Unless noted otherwise, top chord shall have properly attached structural sheathing and bottom chord shall have a properly attached rigid ceiling. Locations shown for permanent lateral restraint of webs shall have bracing installed per BCSI sections B3, B7 or B10, as applicable. Apply plates to each face of truss and position as shown above and on the Joint Details, unless noted otherwise. Refer to drawings 160A-Z for standard plate positions.

Alpine, a division of ITW Building Components Group Inc. shall not be responsible for any deviation from this drawing, any failure to build the truss in conformance with ANSI/TPI 1, or for handling, shipping, installation & bracing of trusses.

A seal on this drawing or cover page listing this drawing, indicates acceptance of professional engineering responsibility solely for the design shown. The suitability and use of this drawing for any structure is the responsibility of the Building Designer per ANSI/TPI 1 Sec.2.

For more information see this job's general notes page and these web sites:
ALPINE: www.alpineitw.com; TPI: www.tpinst.org; SBCA: www.sbcindustry.org; ICC: www.iccsafe.org

MAX. TOT. LD. 60 PSF	REF ASCE7-10-GAB14015
	DATE 8/3/15
MAX. SPACING 24.0"	DRWG S14015ENC100815

Gable Stud Reinforcement Detail

ASCE 7-10: 140 mph Wind Speed, 15' Mean Height, Enclosed, Exposure C, Kzt = 1.00

Or: 120 mph Wind Speed, 15' Mean Height, Partially Enclosed, Exposure C, Kzt = 1.00
Or: 120 mph Wind Speed, 15' Mean Height, Enclosed, Exposure D, Kzt = 1.00
Or: 100 mph Wind Speed, 15' Mean Height, Partially Enclosed, Exposure D, Kzt = 1.00

Max Gable Vertical Length

2x4 Gable Vertical Spacing	Species	Brace Grade	No Braces	(1) 1x4 "L" Brace * Group A	(1) 1x4 "L" Brace * Group B	(1) 2x4 "L" Brace * Group A	(1) 2x4 "L" Brace * Group B	(2) 2x4 "L" Brace ** Group A	(2) 2x4 "L" Brace ** Group B	(1) 2x6 "L" Brace * Group A	(1) 2x6 "L" Brace * Group B	(2) 2x6 "L" Brace ** Group A	(2) 2x6 "L" Brace ** Group B
24" o.c.	SPF HF	#1 / #2	4' 3"	7' 3"	7' 7"	8' 7"	8' 11"	10' 3"	10' 8"	13' 6"	14' 0"	14' 0"	14' 0"
		#3	4' 1"	6' 7"	7' 1"	8' 6"	8' 10"	10' 1"	10' 6"	13' 4"	13' 10"	14' 0"	14' 0"
		Stud	4' 1"	6' 7"	7' 0"	8' 6"	8' 10"	10' 1"	10' 6"	13' 4"	13' 10"	14' 0"	14' 0"
		Standard	4' 1"	5' 8"	6' 0"	7' 7"	8' 1"	10' 1"	10' 6"	11' 10"	12' 8"	14' 0"	14' 0"
	SP DFL	#1	4' 6"	7' 4"	7' 8"	8' 8"	9' 0"	10' 4"	10' 9"	13' 8"	14' 0"	14' 0"	14' 0"
		#2	4' 3"	7' 3"	7' 7"	8' 7"	8' 11"	10' 3"	10' 8"	13' 6"	14' 0"	14' 0"	14' 0"
		#3	4' 2"	6' 0"	6' 4"	7' 11"	8' 6"	10' 2"	10' 7"	12' 5"	13' 4"	14' 0"	14' 0"
		Stud	4' 2"	6' 0"	6' 4"	7' 11"	8' 6"	10' 2"	10' 7"	12' 5"	13' 4"	14' 0"	14' 0"
		Standard	4' 0"	5' 3"	5' 7"	7' 0"	7' 6"	9' 6"	10' 2"	11' 0"	11' 10"	14' 0"	14' 0"
16" o.c.	SPF HF	#1 / #2	4' 11"	8' 4"	8' 8"	9' 10"	10' 3"	11' 8"	12' 2"	14' 0"	14' 0"	14' 0"	14' 0"
		#3	4' 8"	8' 1"	8' 8"	9' 8"	10' 1"	11' 7"	12' 1"	14' 0"	14' 0"	14' 0"	14' 0"
		Stud	4' 8"	8' 1"	8' 6"	9' 8"	10' 1"	11' 7"	12' 1"	14' 0"	14' 0"	14' 0"	14' 0"
		Standard	4' 8"	6' 11"	7' 5"	9' 3"	9' 11"	11' 7"	12' 1"	14' 0"	14' 0"	14' 0"	14' 0"
	SP DFL	#1	5' 1"	8' 5"	8' 9"	9' 11"	10' 4"	11' 10"	12' 4"	14' 0"	14' 0"	14' 0"	14' 0"
		#2	4' 11"	8' 4"	8' 8"	9' 10"	10' 3"	11' 8"	12' 2"	14' 0"	14' 0"	14' 0"	14' 0"
		#3	4' 9"	7' 4"	7' 9"	9' 9"	10' 2"	11' 8"	12' 1"	14' 0"	14' 0"	14' 0"	14' 0"
		Stud	4' 9"	7' 4"	7' 9"	9' 9"	10' 2"	11' 8"	12' 1"	14' 0"	14' 0"	14' 0"	14' 0"
		Standard	4' 8"	6' 5"	6' 10"	8' 7"	9' 2"	11' 7"	12' 1"	13' 6"	14' 0"	14' 0"	14' 0"
12" o.c.	SPF HF	#1 / #2	5' 5"	9' 2"	9' 6"	10' 10"	11' 3"	11' 8"	13' 5"	14' 0"	14' 0"	14' 0"	14' 0"
		#3	5' 1"	9' 0"	9' 4"	10' 8"	11' 1"	12' 9"	13' 3"	14' 0"	14' 0"	14' 0"	14' 0"
		Stud	5' 1"	9' 0"	9' 4"	10' 8"	11' 1"	12' 9"	13' 3"	14' 0"	14' 0"	14' 0"	14' 0"
		Standard	5' 1"	8' 0"	8' 6"	10' 8"	11' 1"	12' 9"	13' 3"	14' 0"	14' 0"	14' 0"	14' 0"
	SP DFL	#1	5' 8"	9' 3"	9' 8"	10' 11"	11' 4"	13' 0"	13' 6"	14' 0"	14' 0"	14' 0"	14' 0"
		#2	5' 5"	9' 2"	9' 6"	10' 10"	11' 3"	12' 11"	13' 5"	14' 0"	14' 0"	14' 0"	14' 0"
		#3	5' 3"	8' 5"	9' 0"	10' 9"	11' 2"	12' 10"	13' 4"	14' 0"	14' 0"	14' 0"	14' 0"
		Stud	5' 3"	8' 5"	9' 0"	10' 9"	11' 2"	12' 10"	13' 4"	14' 0"	14' 0"	14' 0"	14' 0"
		Standard	5' 1"	7' 5"	7' 11"	9' 11"	10' 7"	12' 9"	13' 3"	14' 0"	14' 0"	14' 0"	14' 0"

Bracing Group Species and Grades:

Group A:

Spruce-Pine-Fir	
#1 / #2	Standard
#3	Stud

Hem-Fir	
#2	Stud
#3	Standard

Douglas Fir-Larch
#3
Stud
Standard

Southern Pine***
#3
Stud
Standard

Group B:

Hem-Fir
#1 & Btr
#1

Douglas Fir-Larch
#1
#2

Southern Pine***
#1
#2

1x4 Braces shall be SRB (Stress-Rated Board).

***For 1x4 So. Pine use only Industrial 55 or Industrial 45 Stress-Rated Boards. Group B values may be used with these grades.

Gable Truss Detail Notes:

Wind Load deflection criterion is L/240.

Provide uplift connections for 55 plf over continuous bearing (5 psf TC Dead Load).

Gable end supports load from 4' 0" outlookers with 2' 0" overhang, or 12" plywood overhang.

Attach "L" braces with 10d (0.128"x3.0" min) nails.

* For (1) "L" brace: space nails at 2" o.c. in 18" end zones and 4" o.c. between zones.

** For (2) "L" braces: space nails at 3" o.c. in 18" end zones and 6" o.c. between zones.

"L" bracing must be a minimum of 80% of web member length.

Gable Vertical Plate Sizes	
Vertical Length	No Splice
Less than 4' 0"	1X4 or 2X3
Greater than 4' 0"	3X4

+ Refer to common truss design for peak, splice, and heel plates.

Refer to the Building Designer for conditions not addressed by this detail.

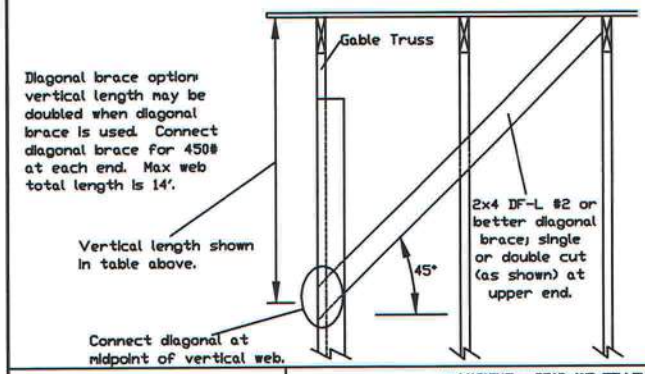

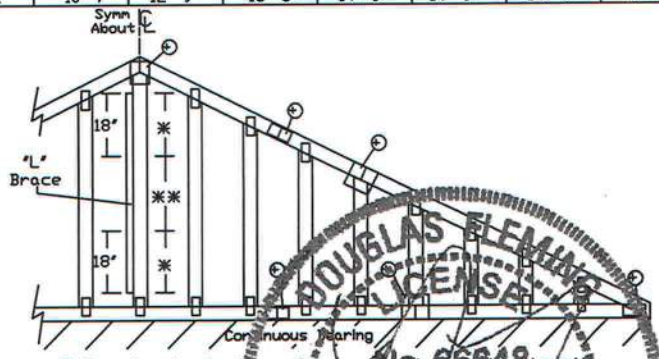

Refer to chart above for max gable vertical length.

ALPINE™ AN ITW COMPANY
13723 Riverport Drive
Suite 200
Maryland Heights, MO 63043

WARNING READ AND FOLLOW ALL NOTES ON THIS DRAWING
IMPORTANT FURNISH THIS DRAWING TO ALL CONTRACTORS INCLUDING THE INSTALLERS.

Trusses require extreme care in fabricating, handling, shipping, installing and bracing. Refer to and follow the latest edition of BCSI (Building Component Safety Information, by TPI and SBCA) for safety practices prior to performing these functions. Installers shall provide temporary bracing per BCSI. Unless noted otherwise, top chord shall have properly attached structural sheathing and bottom chord shall have a properly attached rigid ceiling. Locations shown for permanent lateral restraint of webs shall have bracing installed per BCSI sections B3, B7 or B10, as applicable. Apply plates to each face of truss and position as shown above and on the Joint Details, unless noted otherwise. Refer to drawings 160A-Z for standard plate positions.

Alpine, a division of ITW Building Components Group Inc. shall not be responsible for any deviation from this drawing, any failure to build the truss in conformance with ANSI/TPI 1, or for handling, shipping, installation & bracing of trusses.

A seal on this drawing or cover page listing this drawing, indicates acceptance of professional engineering responsibility solely for the design shown. The suitability and use of this drawing for any structure is the responsibility of the Building Designer per ANSI/TPI 1 Sec.2.

For more information see this job's general notes page and these web sites:
ALPINE: www.alpineitw.com; TPI: www.tpinst.org; SBCA: www.sbcindustry.org; ICC: www.iccsafe.org

DOUGLAS FLEMING LICENSE No. 66648 STATE OF FLORIDA PROFESSIONAL ENGINEER
#0278 04/14/2017

MAX. TOT. LD. 60 PSF

MAX. SPACING 24.0"

REF	ASCE7-10-GAB14015
DATE	10/01/14
DRWG	A14015ENC101014

Piggyback Detail - ASCE 7-10: 160 mph, 30' Mean Height, Enclosed, Exposure C, Kzt=1.00

160 mph Wind, 30.00 ft Mean Hgt, ASCE 7-10, Enclosed Bldg. located anywhere in roof, Exp C, Wind DL= 5.0 psf (min), Kzt=1.0.
Or 140 mph wind, 30.00 ft Mean Hgt, ASCE 7-10, Enclosed Bldg. located anywhere in roof, Exp D, wind DL= 5.0 psf (min), Kzt=1.0.

Note: Top chords of trusses supporting piggyback cap trusses must be adequately braced by sheathing or purlins. The building Engineer of Record shall provide diagonal bracing or any other suitable anchorage to permanently restrain purlins, and lateral bracing for out of plane loads over gable ends.

Maximum truss spacing is 24" o.c. detail is not applicable if cap supports additional loads such as cupola, steeple, chimney or drag strut loads.

** Refer to Engineer's sealed truss design drawing for piggyback and base truss specifications.

Detail A : Purlin Spacing = 24" o.c. or less

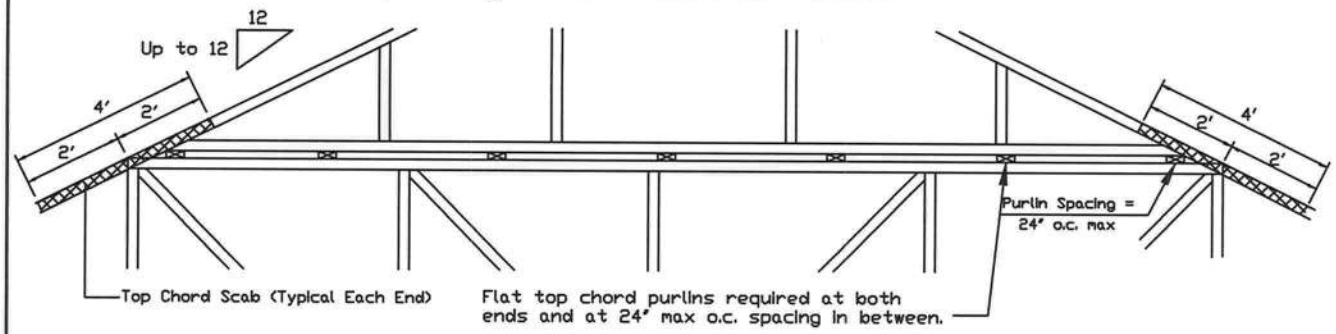

Piggyback cap truss slant nailed to all top chord purlin bracing with (2) 16d box nails (0.135"x3.5") and secure top chord with 2x4 #3 grade scab (1 side only at each end) attached with 2 rows of 10d box nails (0.128"x3") at 4" o.c.

Attach purlin bracing to the flat top chord using (2) 16d box nails (0.135"x3.5").

The top chord #3 grade 2x4 scab may be replaced with either of the following: (1) 3X8 Trulox plate attached with (8) 0.120"x1.375" nails, (4) into cap TC & (4) into base truss TC or (1) 28PB wave piggyback plate plated to the piggyback truss TC and attached to the base truss TC with (4) 0.120"x1.375" nails. Note: Nailing thru holes of wave plate is acceptable.

Detail B : Purlin Spacing > 24" o.c.

Piggyback cap truss slant nailed to all top chord purlin bracing with (2) 16d box nails (0.135"x3.5") and secure top chord with 2x4 #3 grade scab (1 side only at each end) attached with 2 rows of 10d box nails (0.128"x3") at 4" o.c.

Attach purlin bracing to the flat top chord using a minimum of (2) 16d box nails (0.135"x3.5").

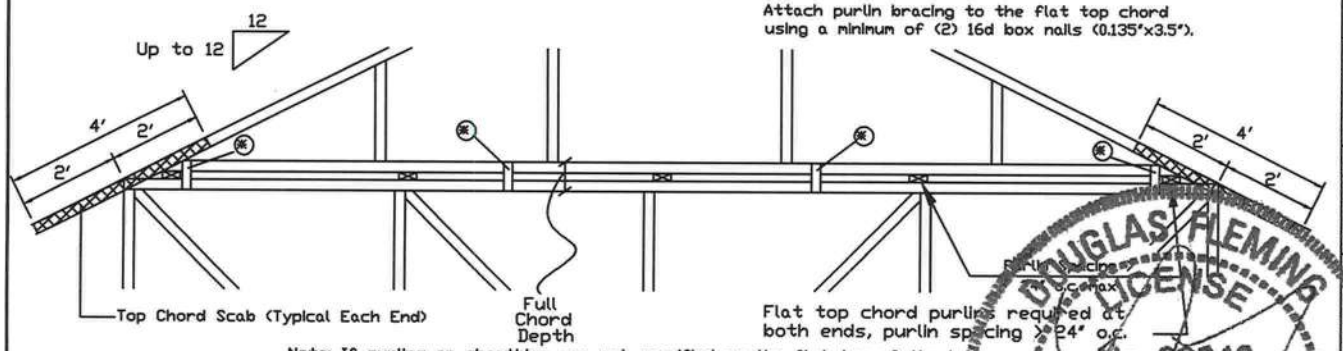

Note: If purlins or sheathing are not specified on the flat top of the base truss, purlins must be installed at 24" o.c. max. and use Detail A.

** In addition, provide connection with one of the following methods:

Trulox
Use 3X8 Trulox plates for 2x4 chord member, and 3X10 Trulox plates for 2x6 and larger chord members. Attach to each face @ 8' o.c. with (4) 0.120"x1.375" nails into cap bottom chord and (4) in base truss top chord. Trulox plates may be staggered 4' o.c. front to back faces.

APA Rated Gusset
8"x8"x7/16" (min) APA rated sheathing gussets (each face). Attach @ 8' o.c. with (8) 6d common (0.113"x2") nails per gusset, (4) in cap bottom chord and (4) in base truss top chord. Gussets may be staggered 4' o.c. front to back faces.

2x4 Vertical Scabs
2x4 SPF #2, full chord depth scabs (each face). Attach @ 8' o.c. with (6) 10d box nails (0.128"x3") per scab, (3) in cap bottom chord and (3) in base truss top chord. Scabs may be staggered 4' o.c. front to back faces.

28PB Wave Piggyback Plate
Use 28PB wave piggyback plate to each face @ 8' o.c. Attach teeth to piggyback at time of fabrication. Attach to supporting truss with (4) 0.120"x1.375" nails per face per ply. Piggyback plates may be staggered 4' o.c. front to back faces.

DOUGLAS FLEMING LICENSE No. 66648 STATE OF FLORIDA PROFESSIONAL ENGINEER

#0278 04/14/2017

ALPINE™ AN ITW COMPANY
13723 Riverport Drive
Suite 200
Maryland Heights, MO 63043

REF	PIGGYBACK
DATE	10/01/14
DRWG	PB160101014
SPACING	24.0"