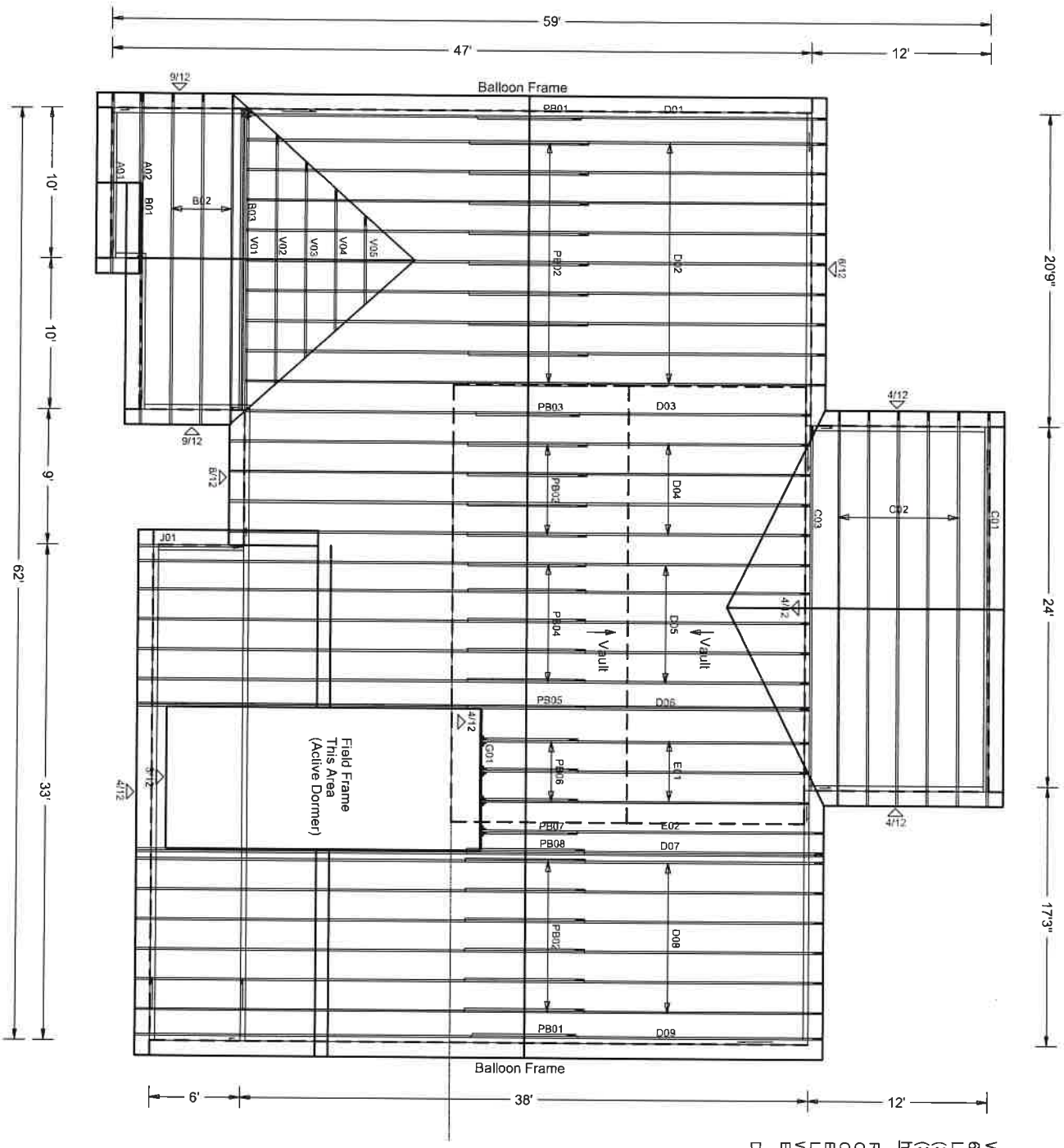

W.B. Howland Truss Co.
610 11th St. SW
Live Oak, FL 32064
(386) 362-1235
(386) 362-7124 (Fax)
howlandtruss@gmail.com

ROOF PITCH: 3,4,8, 9/12
OVERHANG: 1'
CEILING: 8'
EXT. WALLS: 4"
LOADING: 40psf
WIND LOAD: 130mph
EXPOSURE: B
DATE: 6/28/21

PAGE NO: 1 OF 1	JOB NO: 21-5642	Job Name: Slone- Pamlico Cabin Customer: Red Door Homes Designer: Kelly Caudill ADDRESS: SALESMAN: DB : <Not Found>	JOB #: 21-5642

YOONHWAK KIM
LICENSE
No. 86367
STATE OF FLORIDA
PROFESSIONAL ENGINEER
06/30/2021

This document has been electronically signed and sealed using a Digital Signature. Printed copies without an original signature must be verified using the original electronic version.

ALPINE
AN ITW COMPANY
FL REG# 278, Yoonhwak Kim, FL PE #86367

Alpine, an ITW Company
6750 Forum Drive, Suite 305
Orlando, FL 32821
Phone: (800)755-6001
www.alpineitw.com

Site Information:	Page 1:
Customer: W. B. Howland Company, Inc.	*Job Number:* 21-5642
Job Description: Slone- Pamlico Cabin	
Address: FL	

Job Engineering Criteria:	
Design Code: FBC 7th Ed. 2020 Res	*IntelliVIEW Version:* 21.01.01A *JRef #:* 1X6O2150013
Wind Standard: ASCE 7-16 *Wind Speed (mph):* 130 *Building Type:* Closed	*Design Loading (psf):* 40.00

This package contains general notes pages, 34 truss drawing(s) and 7 detail(s).

Item	Drawing Number	Truss
1	181.21.1020.18657	A01
3	181.21.1020.21627	B01
5	181.21.1020.32797	B03
7	181.21.1020.37317	C02
9	181.21.1020.40797	D01
11	181.21.1020.47953	D03
13	181.21.1020.50907	D05
15	181.21.1021.01303	D07
17	181.21.1021.05840	D09
19	181.21.1021.09827	E02
21	181.21.1021.15403	J01
23	181.21.1021.18327	PB02
25	181.21.1021.20330	PB04
27	181.21.1021.22523	PB06
29	181.21.1021.24447	PB08
31	181.21.1021.27293	V02
33	181.21.1021.30983	V04
35	A14015ENC160118	
37	PB160160118	
39	A14030ENC160118	
41	VALTN160118	

Item	Drawing Number	Truss
2	181.21.1020.19953	A02
4	181.21.1020.30113	B02
6	181.21.1020.35350	C01
8	181.21.1020.38813	C03
10	181.21.1020.42840	D02
12	181.21.1020.49423	D04
14	181.21.1020.56310	D06
16	181.21.1021.03693	D08
18	181.21.1021.08127	E01
20	181.21.1021.42837	G01
22	181.21.1021.17177	PB01
24	181.21.1021.19313	PB03
26	181.21.1021.21337	PB05
28	181.21.1021.23450	PB07
30	181.21.1021.25893	V01
32	181.21.1021.29750	V03
34	181.21.1021.32297	V05
36	GBLLETIN0118	
38	BRCLBSUB0119	
40	VAL180160118	

General Notes

Truss Design Engineer Scope of Work, Design Assumptions and Design Responsibilities:
The design responsibilities assumed in the preparation of these design drawings are those specified in ANSI/TPI 1, Chapter 2; and the National Design Standard for Metal Plate Connected Wood Truss Construction, by the Truss Plate Institute. The truss component designs conform to the applicable provisions of ANSI/TPI 1 and NDS, the National Design Specification for Wood Construction by AWC. The truss component designs are based on the specified loading and dimension information furnished by others to the Truss Design Engineer. The Truss Design Engineer has no duty to independently verify the accuracy or completeness of the information provided by others and may rely on that information without liability. The responsibility for verification of that information remains with others neither employed nor controlled by the Truss Design Engineer. The Truss Design Engineer's seal and signature on the attached drawings, or cover page listing these drawings, indicates acceptance of professional engineering responsibility solely for the truss component designs and not for the technical information furnished by others which technical information and consequences thereof remain their sole responsibility.

The suitability and use of these drawings for any particular structure is the responsibility of the Building Designer in accordance with ANSI/TPI 1 Chapter 2. The Building Designer is responsible for determining that the dimensions and loads for each truss component match those required by the plans and by the actual use of the individual component, and for ascertaining that the loads shown on the drawings meet or exceed applicable building code requirements and any additional factors required in the particular application. Truss components using metal connector plates with integral teeth shall not be placed in environments that will cause the moisture content of the wood in which plates are embedded to exceed 19% and/or cause corrosion of connector plates and other metal fasteners.

The Truss Design Engineer shall not be responsible for items beyond the specific scope of the agreed contracted work set forth herein, including but not limited to: verifying the dimensions of the truss component, calculation of any of the truss component design loads, inspection of the truss components before or after installation, the design of temporary or permanent bracing and their attachment required in the roof and/or floor systems, the design of diaphragms or shear walls, the design of load transfer connections to and from diaphragms and shear walls, the design of load transfer to the foundation, the design of connections for truss components to their bearing supports, the design of the bearing supports, installation of the truss components, observation of the truss component installation process, review of truss assembly procedures, sequencing of the truss component installation, construction means and methods, site and/or worker safety in the installation of the truss components and/or its connections.

This document may be a high quality facsimile of the original engineering document which is a digitally signed electronic file with third party authentication. A wet or embossed seal copy of this engineering document is available upon request.

Temporary Lateral Restraint and Bracing:
Temporary lateral restraint and diagonal bracing shall be installed according to the provisions of BCSI chapters B1, B2, B7 and/or B10 (Building Component Safety Information, by TPI and SBCA), or as specified by the Building Designer or other Registered Design Professional. The required locations for lateral restraint and/or bracing depicted on these drawings are only for the permanent lateral support of the truss members to reduce buckling lengths, and do not apply to and may not be relied upon for the temporary stability of the truss components during their installation.

Permanent Lateral Restraint and Bracing:
The required locations for lateral restraint or bracing depicted on these drawings are for the permanent lateral support of the truss members to reduce buckling lengths. Permanent lateral support shall be installed according to the provisions of BCSI chapters B3, B7 and/or B10, or as specified by the Building Designer or other Registered Design Professional. These drawings do not depict or specify installation/erection bracing, wind bracing, portal bracing or similar building stability bracing which are parts of the overall building design to be specified, designed and detailed by the Building Designer.

Connector Plate Information:
Alpine connector plates are made of ASTM A653 or ASTM A1063 galvanized steel with the following designations, gauges and grades: W=Wave, 20ga, grade 40; H=High Strength, 20ga, grade 60; S=Super Strength, 18ga, grade 60. Information on model code compliance is contained in the ICC Evaluation Service report ESR-1118, available on-line at www.icc-es.org.

Fire Retardant Treated Lumber:
Fire retardant treated lumber must be properly re-dried and maintained below 19% or less moisture level through all stages of construction and usage. Fire retardant treated lumber may be more brittle than untreated lumber. Special handling care must be taken to prevent breakage during all handling activities.

General Notes (continued)

Key to Terms:
Information provided on drawings reflects a summary of the pertinent information required for the truss design. Detailed information on load cases, reactions, member lengths, forces and members requiring permanent lateral support may be found in calculation sheets available upon written request.

BCDL = Bottom Chord standard design Dead Load in pounds per square foot.
BCLL = Bottom Chord standard design Live Load in pounds per square foot.
CL = Certified lumber.
Des Ld = total of TCLL, TCDL, BCLL and BCDL Design Load in pounds per square foot.
FRT = Fire Retardant Treated lumber.
FRT-DB = D-Blaze Fire Retardant Treated lumber.
FRT-DC = Dricon Fire Retardant Treated lumber.
FRT-FP = FirePRO Fire Retardant Treated lumber.
FRT-FL = FlamePRO Fire Retardant Treated lumber.
FRT-FT = FlameTech Fire Retardant Treated lumber.
FRT-PG = PYRO-GUARD Fire Retardant Treated lumber.
g = green lumber.
HORZ(LL) = maximum Horizontal panel point deflection due to Live Load, in inches.
HORZ(TL) = maximum Horizontal panel point long term deflection in inches, due to Total Load, including creep adjustment.
HPL = additional Horizontal Load added to a truss Piece in pounds per linear foot or pounds.
Ic = Incised lumber.
FJ = Finger Jointed lumber.
L/# = user specified divisor for limiting span/deflection ratio for evaluation of actual L/defl value.
L/defl = ratio of Length between bearings, in inches, divided by the vertical Deflection due to creep, in inches, at the referenced panel point. Reported as 999 if greater than or equal to 999.
Loc = Location, starting location of left end of bearing or panel point (joint) location of deflection.
Max BC CSI = Maximum bending and axial Combined Stress Index for Bottom Chords for of all load cases.
Max TC CSI = Maximum bending and axial Combined Stress Index for Top Chords for of all load cases.
Max Web CSI= Maximum bending and axial Combined Stress Index for Webs for of all load cases.
NCBCLL = Non-Concurrent Bottom Chord design Live Load in pounds per square foot.
PL = additional Load applied at a user specified angle on a truss Piece in pounds per linear foot or pounds.
PLB = additional vertical load added to a Bottom chord Piece of a truss in pounds per linear foot or pounds
PLT = additional vertical load added to a Top chord Piece of a truss in pounds per linear foot or pounds.
PP = Panel Point.
R = maximum downward design Reaction, in pounds, from all specified gravity load cases, at the indicated location (Loc).
-R = maximum upward design Reaction, in pounds, from all specified gravity load cases, at the identified location (Loc).
Rh = maximum horizontal design Reaction in either direction, in pounds, from all specified gravity load cases, at the indicated location (Loc).
RL = maximum horizontal design Reaction in either direction, in pounds, from all specified non-gravity (wind or seismic) load cases, at the indicated location (Loc).
Rw = maximum downward design Reaction, in pounds, from all specified non-gravity (wind or seismic) load cases, at the identified location (Loc).
TCDL = Top Chord standard design Dead Load in pounds per square foot.
TCLL = Top Chord standard design Live Load in pounds per square foot.
U = maximum Upward design reaction, in pounds, from all specified non-gravity (wind or seismic) load cases, at the indicated location (Loc).
VERT(CL) = maximum Vertical panel point deflection in inches due to Live Load and Creep Component of Dead Load in inches.
VERT(CTL) = maximum Vertical panel point deflection ratios due to Live Load and Creep Component of Dead Load, and maximum long term Vertical panel point deflection in inches due to Total load, including creep adjustment.
VERT(LL) = maximum Vertical panel point deflection in inches due to Live Load.
VERT(TL) = maximum Vertical panel point long term deflection in inches due to Total load, including creep adjustment.
W = Width of non-hanger bearing, in inches.

Refer to ASCE-7 for Wind and Seismic abbreviations.
Uppercase Acronyms not explained above are as defined in TPI 1.

References:

1. AWC: American Wood Council; 222 Catoctin Circle SE, Suite 201; Leesburg, VA 20175; www.awc.org.
2. ICC: International Code Council; www.iccsafe.org.
3. Alpine, a division of ITW Building Components Group Inc.: 514 Earth City Expressway, Suite 242, Earth City, MO 63045; www.alpineitw.com.
4. TPI: Truss Plate Institute, 2670 Crain Highway, Suite 203, Waldorf, MD 20601; www.tpinst.org.
5. SBCA: Wood Truss Council of America, 6300 Enterprise Lane, Madison, WI 53719; www.sbcindustry.com.

SEQN: 626776 GABL FROM: CDM	Ply: 1 Qty: 1	**Job Number:** 21-5642 Slone- Pamlico Cabin **Truss Label:** A01	Cust: R 215 JRef: 1X6O2150013 T1 DrwNo: 181.21.1020.18657 SSB / YK 06/30/2021

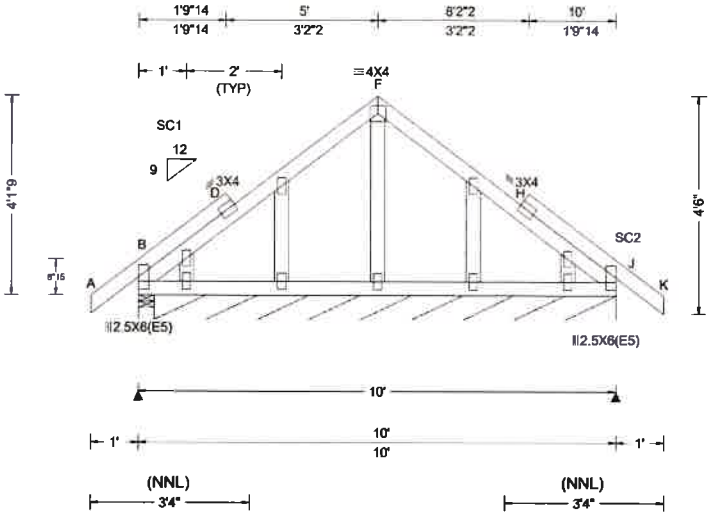

Loading Criteria (psf)	Wind Criteria	Snow Criteria (Pg,Pf in PSF)	Defl/CSI Criteria	▲ Maximum Reactions (lbs), or *=PLF
TCLL: 20.00 TCDL: 10.00 BCLL: 0.00 BCDL: 10.00 Des Ld: 40.00 NCBCLL: 10.00 Soffit: 2.00 Load Duration: 1.25 Spacing: 24.0 "	Wind Std: ASCE 7-16 Speed: 130 mph Enclosure: Closed Risk Category: II EXP: B Kzt: NA Mean Height: 15.00 ft TCDL: 5.0 psf BCDL: 5.0 psf MWFRS Parallel Dist: 0 to h/2 C&C Dist a: 3.00 ft Loc. from endwall: Any GCpi: 0.18 Wind Duration: 1.60	Pg: NA Ct: NA CAT: NA Pf: NA Ce: NA Lu: NA Cs: NA Snow Duration: NA Building Code: FBC 7th Ed. 2020 Res. TPI Std: 2014 Rep Fac: Yes FT/RT:20(0)/10(0) Plate Type(s): WAVE	PP Deflection in loc L/defl L/# VERT(LL): 0.001 H 999 240 VERT(CL): 0.002 H 999 180 HORZ(LL): 0.001 D - - HORZ(TL): 0.001 D - - Creep Factor: 2.0 Max TC CSI: 0.083 Max BC CSI: 0.028 Max Web CSI: 0.033 VIEW Ver: 21.01.01A.0521.20	

	Gravity			Non-Gravity		
Loc	R+	/ R-	/ Rh	/ Rw	/ U	/ RL
B	161	/-	/-	/91	/-	/54
J*	86	/-	/-	/48	/-	/-

Wind reactions based on MWFRS
B Brg Width = 4.0 Min Req = 1.5
J Brg Width = 116 Min Req = -
Bearings B & B are a rigid surface.
Members not listed have forces less than 375#

Lumber

Top chord: 2x4 SP #2;
Bot chord: 2x4 SP #2;
Webs: 2x4 SP #3;
Stack Chord: SC1 2x4 SP #2;
Stack Chord: SC2 2x4 SP #2;

Plating Notes

All plates are 2X4 except as noted.

Wind

Wind loads based on MWFRS with additional C&C member design.

Right end vertical not exposed to wind pressure.

Wind loading based on both gable and hip roof types.

Additional Notes

See DWGS A14015ENC160118 & GBLLETIN0118 for gable wind bracing and other requirements.

Stacked top chord must NOT be notched or cut in area (NNL). Dropped top chord braced at 24" oc intervals. Attach stacked top chord (SC) to dropped top chord in notchable area using 3x4 tie-plates 24" oc. Center plate on stacked/dropped chord interface, plate length perpendicular to chord length. Splice top chord in notchable area using 3x6.

YOONHWAK KIM
LICENSE
No. 86367
STATE OF
FLORIDA
PROFESSIONAL ENGINEER

FL REG# 278, Yoonhwak Kim, FL PE #86367
06/30/2021

****WARNING**** READ AND FOLLOW ALL NOTES ON THIS DRAWING!
****IMPORTANT**** FURNISH THIS DRAWING TO ALL CONTRACTORS INCLUDING THE INSTALLERS

Trusses require extreme care in fabricating, handling, shipping, installing and bracing. Refer to and follow the latest edition of BCSI (Building Component Safety Information, by TPI and SBCA) for safety practices prior to performing these functions. Installers shall provide temporary bracing per BCSI. Unless noted otherwise, top chord shall have properly attached structural sheathing and bottom chord shall have a properly attached rigid ceiling. Locations shown for permanent lateral restraint of webs shall have bracing installed per BCSI sections B3, B7, or B10, as applicable. Apply plates to each face of truss and position as shown above and on the Joint Details, unless noted otherwise. Refer to drawings 160A-Z for standard plate positions. Refer to job's General Notes page for additional information.

Alpine, a division of ITW Building Components Group Inc. shall not be responsible for any deviation from this drawing, any failure to build the truss in conformance with ANSI/TPI 1, or for handling, shipping, installation and bracing of trusses. A seal on this drawing or cover page listing this drawing, indicates acceptance of professional engineering responsibility solely for the design shown. The suitability and use of this drawing for any structure is the responsibility of the Building Designer per ANSI/TPI 1 Sec.2.

For more information see these web sites: Alpine: alpineitw.com; TPI: tpinst.org; SBCA: sbcindustry.com; ICC: iccsafe.org; AWC: awc.org

ALPINE
AN ITW COMPANY
6750 Forum Drive
Suite 305
Orlando FL, 32821

SEQN: 626778 COMN FROM: CDM	Ply: 1 Qty: 1	**Job Number:** 21-5642 Slone- Pamlico Cabin **Truss Label:** A02	Cust: R 215 JRef:1X6O2150013 T21 DrwNo: 181.21.1020.19953 SSB / YK 06/30/2021

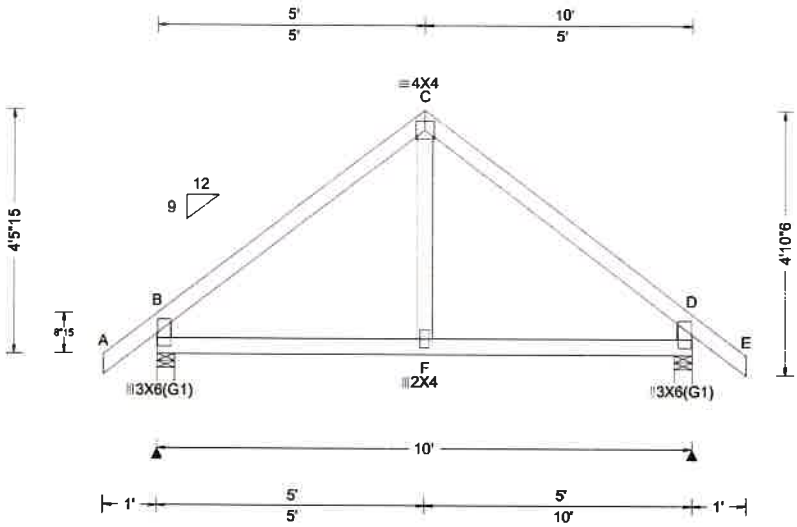

Loading Criteria (psf)	**Wind Criteria**	**Snow Criteria** (Pg,Pf in PSF)	**Defl/CSI Criteria**
TCLL: 20.00 TCDL: 10.00 BCLL: 0.00 BCDL: 10.00 Des Ld: 40.00 NCBCLL: 10.00 Soffit: 2.00 Load Duration: 1.25 Spacing: 24.0 "	Wind Std: ASCE 7-16 Speed: 130 mph Enclosure: Closed Risk Category: II EXP: B Kzt: NA Mean Height: 15.00 ft TCDL: 5.0 psf BCDL: 5.0 psf MWFRS Parallel Dist: 0 to h/2 C&C Dist a: 3.00 ft Loc. from endwall: Any GCpi: 0.18 Wind Duration: 1.60	Pg: NA Ct: NA CAT: NA Pf: NA Ce: NA Lu: NA Cs: NA Snow Duration: NA Building Code: FBC 7th Ed. 2020 Res. TPI Std: 2014 Rep Fac: Yes FT/RT:20(0)/10(0) Plate Type(s): WAVE	PP Deflection in loc L/defl L/# VERT(LL): 0.003 F 999 240 VERT(CL): 0.005 F 999 180 HORZ(LL): 0.002 F - - HORZ(TL): 0.005 F - - Creep Factor: 2.0 Max TC CSI: 0.249 Max BC CSI: 0.240 Max Web CSI: 0.082 VIEW Ver: 21.01.01A.0521.20

▲ Maximum Reactions (lbs)

	Gravity			Non-Gravity		
Loc	R+	/ R-	/ Rh	/ Rw	/ U	/ RL
B	495	/-	/-	/291	/12	/101
D	495	/-	/-	/291	/12	/-

Wind reactions based on MWFRS
B Brg Width = 4.0 Min Req = 1.5
D Brg Width = 4.0 Min Req = 1.5
Bearings B & D are a rigid surface.
Members not listed have forces less than 375#

Maximum Top Chord Forces Per Ply (lbs)

Chords	Tens.	Comp.	Chords	Tens.	Comp.
B - C	167	-462	C - D	167	-462

Lumber

Top chord: 2x4 SP #2;
Bot chord: 2x4 SP #2;
Webs: 2x4 SP #3;
Lt Stub Wedge: 2x4 SP #3;Rt Stub Wedge: 2x4 SP #3;

Wind

Wind loads based on MWFRS with additional C&C member design.

Wind loading based on both gable and hip roof types.

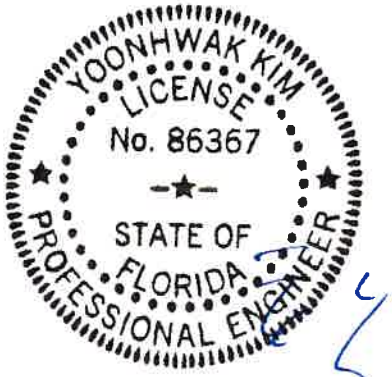

FL REG# 278, Yoonhwak Kim, FL PE #86367
06/30/2021

****WARNING**** READ AND FOLLOW ALL NOTES ON THIS DRAWING!
****IMPORTANT**** FURNISH THIS DRAWING TO ALL CONTRACTORS INCLUDING THE INSTALLERS

Trusses require extreme care in fabricating, handling, shipping, installing and bracing. Refer to and follow the latest edition of BCSI (Building Component Safety Information, by TPI and SBCA) for safety practices prior to performing these functions. Installers shall provide temporary bracing per BCSI. Unless noted otherwise, top chord shall have properly attached structural sheathing and bottom chord shall have a properly attached rigid ceiling. Locations shown for permanent lateral restraint of webs shall have bracing installed per BCSI sections B3, B7, or B10, as applicable. Apply plates to each face of truss and position as shown above and on the Joint Details, unless noted otherwise. Refer to drawings 160A-Z for standard plate positions. Refer to job's General Notes page for additional information.

Alpine, a division of ITW Building Components Group Inc. shall not be responsible for any deviation from this drawing, any failure to build the truss in conformance with ANSI/TPI 1, or for handling, shipping, installation and bracing of trusses. A seal on this drawing or cover page listing this drawing, indicates acceptance of professional engineering responsibility solely for the design shown. The suitability and use of this drawing for any structure is the responsibility of the Building Designer per ANSI/TPI 1 Sec.2.

For more information see these web sites: Alpine: alpineitw.com; TPI: tpinst.org; SBCA: sbcindustry.com; ICC: iccsafe.org; AWC: awc.org

ALPINE
AN ITW COMPANY
6750 Forum Drive
Suite 305
Orlando FL, 32821

SEQN: 626787 GABL FROM: CDM	Ply: 1 Qty: 1	**Job Number:** 21-5642 Slone- Pamlico Cabin **Truss Label:** B01	Cust: R 215 JRef: 1X6O2150013 T4 DrwNo: 181.21.1020.21627 SSB / YK 06/30/2021

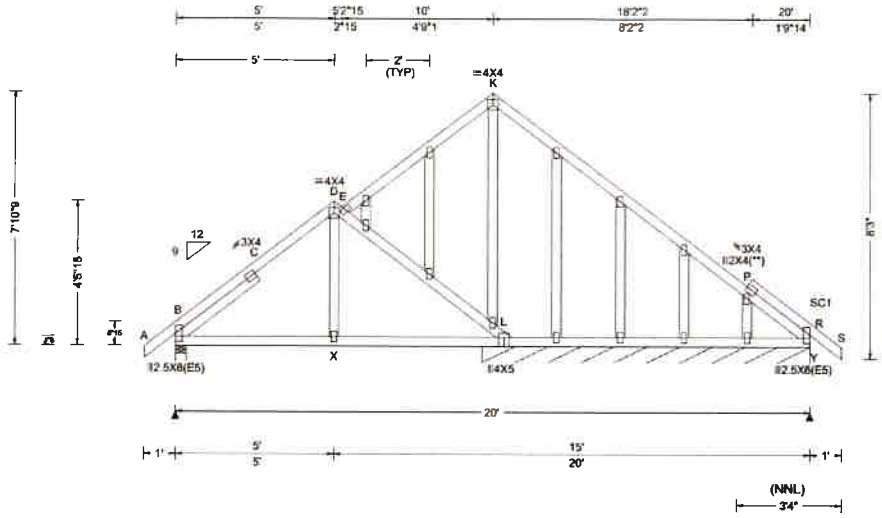

Loading Criteria (psf)	**Wind Criteria**	**Snow Criteria** (Pg,Pf in PSF)	**Defl/CSI Criteria**	**▲Maximum Reactions (lbs), or *=PLF**
TCLL: 20.00 TCDL: 10.00 BCLL: 0.00 BCDL: 10.00 Des Ld: 40.00 NCBCLL: 10.00 Soffit: 2.00 Load Duration: 1.25 Spacing: 24.0 "	Wind Std: ASCE 7-16 Speed: 130 mph Enclosure: Closed Risk Category: II EXP: B Kzt: NA Mean Height: 15.00 ft TCDL: 5.0 psf BCDL: 5.0 psf MWFRS Parallel Dist: 0 to h/2 C&C Dist a: 3.00 ft Loc. from endwall: Any GCpi: 0.18 Wind Duration: 1.60	Pg: NA Ct: NA CAT: NA Pf: NA Ce: NA Lu: NA Cs: NA Snow Duration: NA Building Code: FBC 7th Ed. 2020 Res. TPI Std: 2014 Rep Fac: Yes FT/RT:20(0)/10(0) Plate Type(s): WAVE	PP Deflection in loc L/defl L/# VERT(LL): 0.033 C 999 240 VERT(CL): 0.068 C 999 180 HORZ(LL): 0.026 C - - HORZ(TL): 0.053 C - - Creep Factor: 2.0 Max TC CSI: 0.295 Max BC CSI: 0.259 Max Web CSI: 0.098 VIEW Ver: 21.01.01A.0521.20	

	Gravity			Non-Gravity		
Loc	R+	/ R-	/ Rh	/ Rw	/ U	/ RL
B	559	/-	/-	/334	/-	/154
Y*	124	/-	/-	/70	/-	/-

Wind reactions based on MWFRS
B Brg Width = 4.0 Min Req = 1.5
Y Brg Width = 124 Min Req = -
Bearings B & J are a rigid surface.
Members not listed have forces less than 375#

Maximum Top Chord Forces Per Ply (lbs)

Chords	Tens.	Comp.	Chords	Tens.	Comp.
B - C	142	-574	E - L	166	-453
C - D	72	-465			

Lumber

Top chord: 2x4 SP #2;
Bot chord: 2x4 SP #2;
Webs: 2x4 SP #3;
Stack Chord: SC1 2x4 SP #2;
Lt Slider: 2x4 SP #3; block length = 3.178'

Laterally brace top chord below filler and bottom chord above filler at 24" o.c., including a lateral brace at chord ends (If no rigid diaphragm exists at that point).

Plating Notes

All plates are 2X4 except as noted.

(**) 1 plate(s) require special positioning. Refer to scaled plate plot details for special positioning requirements.

Loading

Gable end supports 8" max rake overhang. Top chord must not be cut or notched.

Wind

Wind loads based on MWFRS with additional C&C member design.

Right end vertical not exposed to wind pressure.

Wind loading based on both gable and hip roof types.

Additional Notes

See DWGS A14015ENC160118 & GBLLETIN0118 for gable wind bracing and other requirements.

Stacked top chord must NOT be notched or cut in area (NNL). Dropped top chord braced at 24" oc intervals. Attach stacked top chord (SC) to dropped top chord in notchable area using 3x4 tie-plates 24" oc. Center plate on stacked/dropped chord interface, plate length perpendicular to chord length. Splice top chord in notchable area using 3x6.

YOONHWAK KIM
LICENSE
No. 86367
STATE OF
FLORIDA
PROFESSIONAL ENGINEER

FL REG# 278, Yoonhwak Kim, FL PE #86367
06/30/2021

WARNING READ AND FOLLOW ALL NOTES ON THIS DRAWING!
IMPORTANT FURNISH THIS DRAWING TO ALL CONTRACTORS INCLUDING THE INSTALLERS

Trusses require extreme care in fabricating, handling, shipping, installing and bracing. Refer to and follow the latest edition of BCSI (Building Component Safety Information, by TPI and SBCA) for safety practices prior to performing these functions. Installers shall provide temporary bracing per BCSI. Unless noted otherwise, top chord shall have properly attached structural sheathing and bottom chord shall have a properly attached rigid ceiling. Locations shown for permanent lateral restraint of webs shall have bracing installed per BCSI sections B3, B7, or B10, as applicable. Apply plates to each face of truss and position as shown above and on the Joint Details, unless noted otherwise. Refer to drawings 160A-Z for standard plate positions. Refer to job's General Notes page for additional information.

Alpine, a division of ITW Building Components Group Inc. shall not be responsible for any deviation from this drawing, any failure to build the truss in conformance with ANSI/TPI 1, or for handling, shipping, installation and bracing of trusses. A seal on this drawing or cover page listing this drawing, indicates acceptance of professional engineering responsibility solely for the design shown. The suitability and use of this drawing for any structure is the responsibility of the Building Designer per ANSI/TPI 1 Sec.2.

For more information see these web sites: Alpine: alpineitw.com; TPI: tpinst.org; SBCA: sbcindustry.com; ICC: iccsafe.org; AWC: awc.org

ALPINE
AN ITW COMPANY
6750 Forum Drive
Suite 305
Orlando FL, 32821

SEQN: 626791 COMN FROM: CDM	Ply: 1 Qty: 3	**Job Number:** 21-5642 Slone- Pamlico Cabin **Truss Label:** B02	Cust: R 215 JRef: 1X6O2150013 T3 DrwNo: 181.21.1020.30113 SSB / YK 06/30/2021

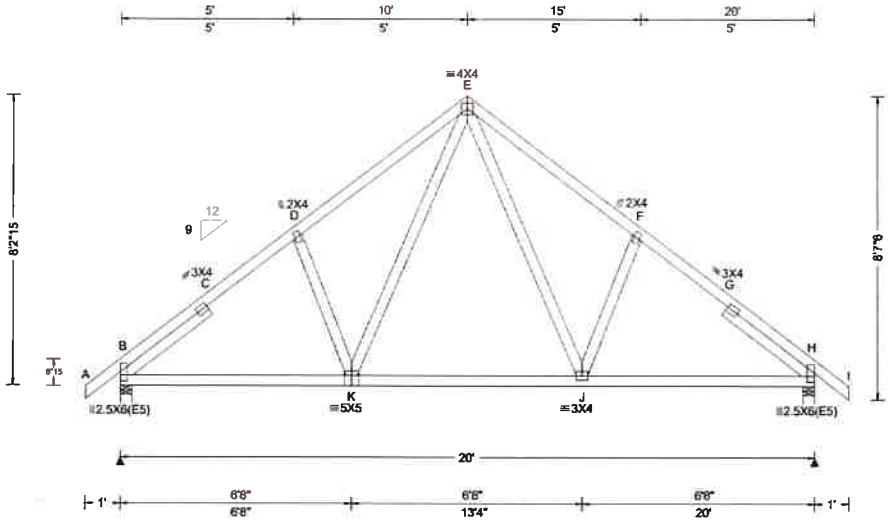

Loading Criteria (psf)

TCLL:	20.00
TCDL:	10.00
BCLL:	0.00
BCDL:	10.00
Des Ld:	40.00
NCBCLL:	10.00
Soffit:	2.00

Load Duration: 1.25
Spacing: 24.0 "

Wind Criteria
Wind Std: ASCE 7-16
Speed: 130 mph
Enclosure: Closed
Risk Category: II
EXP: B Kzt: NA
Mean Height: 15.00 ft
TCDL: 5.0 psf
BCDL: 5.0 psf
MWFRS Parallel Dist: 0 to h/2
C&C Dist a: 3.00 ft
Loc. from endwall: Any
GCpi: 0.18
Wind Duration: 1.60

Snow Criteria (Pg,Pf in PSF)
Pg: NA Ct: NA CAT: NA
Pf: NA Ce: NA
Lu: NA Cs: NA
Snow Duration: NA

Building Code:
FBC 7th Ed. 2020 Res.
TPI Std: 2014
Rep Fac: Yes
FT/RT:20(0)/10(0)
Plate Type(s):
WAVE

Defl/CSI Criteria

PP Deflection in	loc	L/defl	L/#
VERT(LL): 0.041	C	999	240
VERT(CL): 0.079	C	999	180
HORZ(LL): 0.030	C	-	-
HORZ(TL): 0.059	C	-	-

Creep Factor: 2.0
Max TC CSI: 0.295
Max BC CSI: 0.551
Max Web CSI: 0.181

VIEW Ver: 21.01.01A.0521.20

▲ Maximum Reactions (lbs)

Loc	Gravity R+	Gravity / R-	Gravity / Rh	Non-Gravity / Rw	Non-Gravity / U	Non-Gravity / RL
B	985	/-	/-	/534	/19	/175
H	985	/-	/-	/534	/19	/-

Wind reactions based on MWFRS
B Brg Width = 4.0 Min Req = 1.5
H Brg Width = 4.0 Min Req = 1.5
Bearings B & H are a rigid surface.
Members not listed have forces less than 375#

Maximum Top Chord Forces Per Ply (lbs)

Chords	Tens.	Comp.	Chords	Tens.	Comp.
B - C	199	-1249	E - F	272	-1087
C - D	188	-1118	F - G	187	-1120
D - E	273	-1086	G - H	197	-1250

Maximum Bot Chord Forces Per Ply (lbs)

Chords	Tens.	Comp.	Chords	Tens.	Comp.
B - K	882	-46	J - H	882	-49
K - J	606	0			

Maximum Web Forces Per Ply (lbs)

Webs	Tens.	Comp.	Webs	Tens.	Comp.
K - E	471	-111	E - J	474	-110

Lumber

Top chord: 2x4 SP #2;
Bot chord: 2x4 SP #2;
Webs: 2x4 SP #3;
Lt Slider: 2x4 SP #3; block length = 3.178'
Rt Slider: 2x4 SP #3; block length = 3.178'

Loading

Truss passed check for 20 psf additional bottom chord live load in areas with 42"-high x 24"-wide clearance.

Wind

Wind loads based on MWFRS with additional C&C member design.

Wind loading based on both gable and hip roof types.

YOONHWAK KIM
LICENSE
No. 86367
STATE OF
FLORIDA
PROFESSIONAL ENGINEER

FL REG# 278, Yoonhwak Kim, FL PE #86367
06/30/2021

****WARNING**** READ AND FOLLOW ALL NOTES ON THIS DRAWING!
****IMPORTANT**** FURNISH THIS DRAWING TO ALL CONTRACTORS INCLUDING THE INSTALLERS

Trusses require extreme care in fabricating, handling, shipping, installing and bracing. Refer to and follow the latest edition of BCSI (Building Component Safety Information, by TPI and SBCA) for safety practices prior to performing these functions. Installers shall provide temporary bracing per BCSI. Unless noted otherwise, top chord shall have properly attached structural sheathing and bottom chord shall have a properly attached rigid ceiling. Locations shown for permanent lateral restraint of webs shall have bracing installed per BCSI sections B3, B7, or B10, as applicable. Apply plates to each face of truss and position as shown above and on the Joint Details, unless noted otherwise. Refer to drawings 160A-Z for standard plate positions. Refer to job's General Notes page for additional information.

Alpine, a division of ITW Building Components Group Inc. shall not be responsible for any deviation from this drawing, any failure to build the truss in conformance with ANSI/TPI 1, or for handling, shipping, installation and bracing of trusses. A seal on this drawing or cover page listing this drawing, indicates acceptance of professional engineering responsibility solely for the design shown. The suitability and use of this drawing for any structure is the responsibility of the Building Designer per ANSI/TPI 1 Sec.2.

For more information see these web sites: Alpine: alpineitw.com; TPI: tpinst.org; SBCA: sbcindustry.com; ICC: iccsafe.org; AWC: awc.org

ALPINE
AN ITW COMPANY
6750 Forum Drive
Suite 305
Orlando FL, 32821

SEQN: 626936 COMN FROM: CDM	Ply: 3 Qty: 1	**Job Number:** 21-5642 Slone- Pamlico Cabin **Truss Label:** B03	Cust: R 215 JRef: 1X6O2150013 T10 DrwNo: 181.21.1020.32797 SSB / YK 06/30/2021

3 Complete Trusses Required

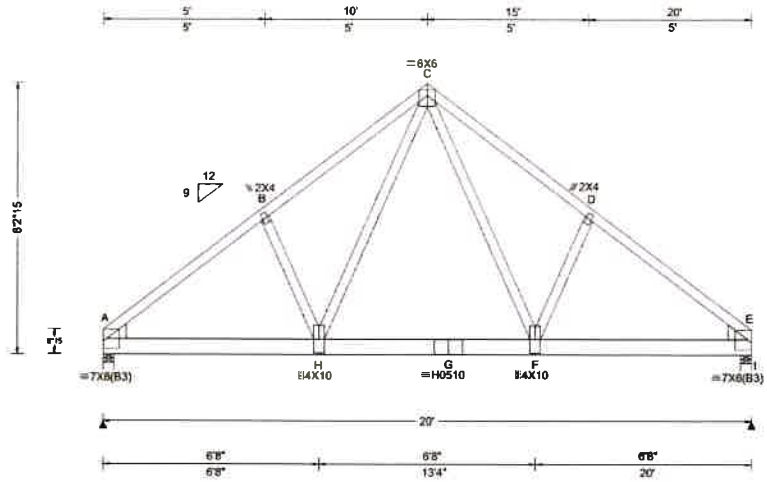

Loading Criteria (psf)	Wind Criteria	Snow Criteria (Pg,Pf in PSF)	Defl/CSI Criteria
TCLL: 20.00	Wind Std: ASCE 7-16	Pg: NA Ct: NA CAT: NA	PP Deflection in loc L/defl L/#
TCDL: 10.00	Speed: 130 mph	Pf: NA Ce: NA	VERT(LL): 0.105 F 999 240
BCLL: 0.00	Enclosure: Closed	Lu: NA Cs: NA	VERT(CL): 0.207 F 999 180
BCDL: 10.00	Risk Category: II	Snow Duration: NA	HORZ(LL): 0.034 B - -
Des Ld: 40.00	EXP: B Kzt: NA		HORZ(TL): 0.067 B - -
NCBCLL: 0.00	Mean Height: 15.00 ft	Building Code:	Creep Factor: 2.0
Soffit: 2.00	TCDL: 5.0 psf	FBC 7th Ed. 2020 Res.	Max TC CSI: 0.664
Load Duration: 1.25	BCDL: 5.0 psf	TPI Std: 2014	Max BC CSI: 0.540
Spacing: 24.0 "	MWFRS Parallel Dist: 0 to h/2	Rep Fac: Yes	Max Web CSI: 0.872
	C&C Dist a: 3.00 ft	FT/RT:20(0)/10(0)	
	Loc. from endwall: not in 4.50 ft	Plate Type(s):	
	GCpi: 0.18	WAVE, HS	VIEW Ver: 21.01.01A.0521.20
	Wind Duration: 1.60		

▲ Maximum Reactions (lbs)

	Gravity			Non-Gravity		
Loc	R+	/ R-	/ Rh	/ Rw	/ U	/ RL
A	10551	/-	/-	/-	/35	/-
I	9017	/-	/-	/-	/257	/-

Wind reactions based on MWFRS
A Brg Width = 4.0 Min Req = 2.9
I Brg Width = 4.0 Min Req = 2.5
Bearings A & I are a rigid surface.
Members not listed have forces less than 375#

Maximum Top Chord Forces Per Ply (lbs)

Chords	Tens.	Comp.	Chords	Tens.	Comp.
A - B	107	-3706	C - D	103	-3621
B - C	99	-3644	D - E	111	-3684

Maximum Bot Chord Forces Per Ply (lbs)

Chords	Tens.	Comp.	Chords	Tens.	Comp.
A - H	2906	-80	G - F	2008	-56
H - G	2008	-56	F - E	2887	-83

Maximum Web Forces Per Ply (lbs)

Webs	Tens.	Comp.	Webs	Tens.	Comp.
H - C	2288	-47	C - F	2242	-55

Lumber

Top chord: 2x4 SP #2;
Bot chord: 2x6 SP 2400f-2.0E;
Webs: 2x4 SP #3;
Lt Wedge: 2x6 SP 2400f-2.0E;
Rt Wedge: 2x6 SP 2400f-2.0E;

Nailnote

Nail Schedule:0.128"x3", min. nails
Top Chord: 1 Row @12.00" o.c.
Bot Chord: 2 Rows @ 3.50" o.c. (Each Row)
Webs : 1 Row @ 4" o.c.
Repeat nailing as each layer is applied. Use equal spacing between rows and stagger nails in each row to avoid splitting.

Special Loads

——(Lumber Dur.Fac.=1.25 / Plate Dur.Fac.=1.25)

TC: From	65 plf at	0.00 to	65 plf at	20.00	
BC: From	10 plf at	0.00 to	10 plf at	20.00	
PLB: From	20 plf at	8.40 to	20 plf at	11.60	

BC: 1695 lb Conc. Load at 0.40
BC: 1812 lb Conc. Load at 2.06, 4.06, 6.06, 8.06 10.06,12.06,14.06,16.06,18.06

Loading

Truss passed check for 20 psf additional bottom chord live load in areas with 42"-high x 24"-wide clearance.

Wind

Wind loads and reactions based on MWFRS.

Wind loading based on both gable and hip roof types.

YOONHWAK KIM
LICENSE
No. 86367
STATE OF
FLORIDA
PROFESSIONAL ENGINEER

FL REG# 278, Yoonhwak Kim, FL PE #86367
06/30/2021

****WARNING**** READ AND FOLLOW ALL NOTES ON THIS DRAWING!
****IMPORTANT**** FURNISH THIS DRAWING TO ALL CONTRACTORS INCLUDING THE INSTALLERS

Trusses require extreme care in fabricating, handling, shipping, installing and bracing. Refer to and follow the latest edition of BCSI (Building Component Safety Information, by TPI and SBCA) for safety practices prior to performing these functions. Installers shall provide temporary bracing per BCSI. Unless noted otherwise, top chord shall have properly attached structural sheathing and bottom chord shall have a properly attached rigid ceiling. Locations shown for permanent lateral restraint of webs shall have bracing installed per BCSI sections B3, B7, or B10, as applicable. Apply plates to each face of truss and position as shown above and on the Joint Details, unless noted otherwise. Refer to drawings 160A-Z for standard plate positions. Refer to job's General Notes page for additional information.

Alpine, a division of ITW Building Components Group Inc. shall not be responsible for any deviation from this drawing, any failure to build the truss in conformance with ANSI/TPI 1, or for handling, shipping, installation and bracing of trusses. A seal on this drawing or cover page listing this drawing, indicates acceptance of professional engineering responsibility solely for the design shown. The suitability and use of this drawing for any structure is the responsibility of the Building Designer per ANSI/TPI 1 Sec.2.

For more information see these web sites: Alpine: alpineitw.com; TPI: tpinst.org; SBCA: sbcindustry.com; ICC: iccsafe.org; AWC: awc.org

ALPINE
AN ITW COMPANY
6750 Forum Drive
Suite 305
Orlando FL, 32821

SEQN: 626771 GABL FROM: CDM	Ply: 1 Qty: 1	**Job Number:** 21-5642 Slone- Pamlico Cabin **Truss Label:** C01	Cust: R 215 JRef: 1X6O2150013 T7 DrwNo: 181.21.1020.35350 SSB / YK 06/30/2021

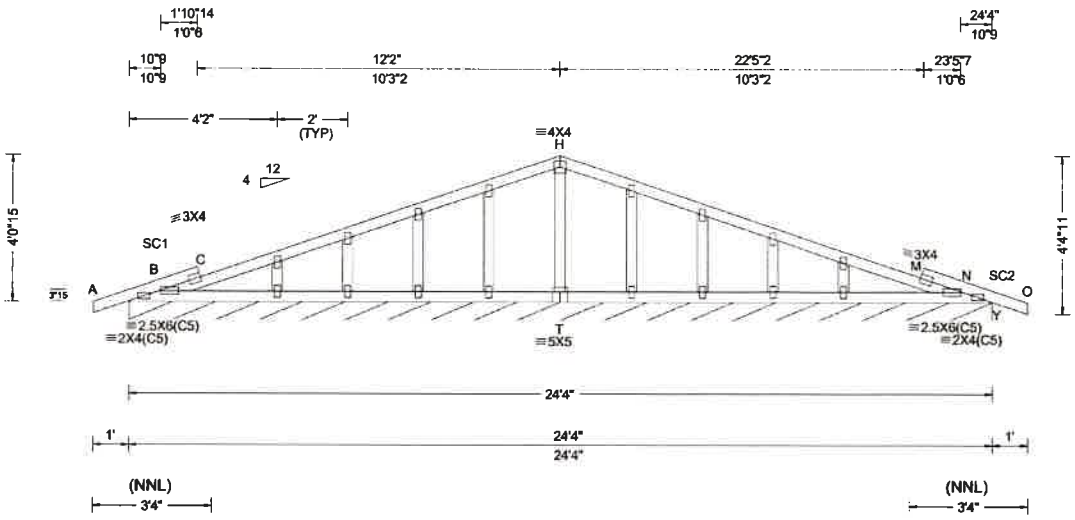

Loading Criteria (psf)	Wind Criteria	Snow Criteria (Pg,Pf in PSF)	Defl/CSI Criteria
TCLL: 20.00 TCDL: 10.00 BCLL: 0.00 BCDL: 10.00 Des Ld: 40.00 NCBCLL: 10.00 Soffit: 2.00 Load Duration: 1.25 Spacing: 24.0 "	Wind Std: ASCE 7-16 Speed: 130 mph Enclosure: Closed Risk Category: II EXP: B Kzt: NA Mean Height: 15.00 ft TCDL: 5.0 psf BCDL: 5.0 psf MWFRS Parallel Dist: 0 to h/2 C&C Dist a: 3.00 ft Loc. from endwall: Any GCpi: 0.18 Wind Duration: 1.60	Pg: NA Ct: NA CAT: NA Pf: NA Ce: NA Lu: NA Cs: NA Snow Duration: NA Building Code: FBC 7th Ed. 2020 Res. TPI Std: 2014 Rep Fac: Yes FT/RT:20(0)/10(0) Plate Type(s): WAVE	PP Deflection in loc L/defl L/# VERT(LL): 0.007 C 999 240 VERT(CL): 0.014 C 999 180 HORZ(LL): 0.002 C - - HORZ(TL): 0.003 C - - Creep Factor: 2.0 Max TC CSI: 0.138 Max BC CSI: 0.098 Max Web CSI: 0.043 VIEW Ver: 21.01.01A.0521.20

▲ Maximum Reactions (lbs), or *=PLF

	Gravity			Non-Gravity		
Loc	R+	/ R-	/ Rh	/ Rw	/ U	/ RL
Y*	86	/-	/-	/43	/-	/1

Wind reactions based on MWFRS
Y Brg Width = 292 Min Req = -
Bearing B is a rigid surface.
Members not listed have forces less than 375#

Lumber

Top chord: 2x4 SP #2;
Bot chord: 2x4 SP #2;
Webs: 2x4 SP #3;
Stack Chord: SC1 2x4 SP #2;
Stack Chord: SC2 2x4 SP #2;

Plating Notes

All plates are 2X4 except as noted.

Wind

Wind loads based on MWFRS with additional C&C member design.

Wind loading based on both gable and hip roof types.

Additional Notes

See DWGS A14015ENC160118 & GBLLETIN0118 for gable wind bracing and other requirements.

Stacked top chord must NOT be notched or cut in area (NNL). Dropped top chord braced at 24" oc intervals. Attach stacked top chord (SC) to dropped top chord in notchable area using 3x4 tie-plates 24" oc. Center plate on stacked/dropped chord interface, plate length perpendicular to chord length. Splice top chord in notchable area using 3x6.

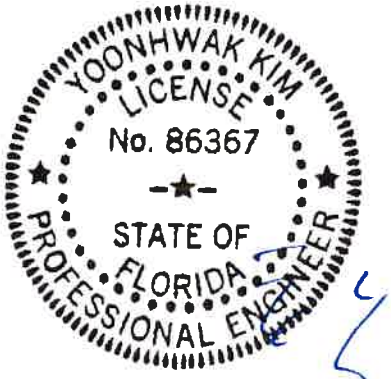

FL REG# 278, Yoonhwak Kim, FL PE #86367
06/30/2021

****WARNING**** READ AND FOLLOW ALL NOTES ON THIS DRAWING!
****IMPORTANT**** FURNISH THIS DRAWING TO ALL CONTRACTORS INCLUDING THE INSTALLERS

Trusses require extreme care in fabricating, handling, shipping, installing and bracing. Refer to and follow the latest edition of BCSI (Building Component Safety Information, by TPI and SBCA) for safety practices prior to performing these functions. Installers shall provide temporary bracing per BCSI. Unless noted otherwise, top chord shall have properly attached structural sheathing and bottom chord shall have a properly attached rigid ceiling. Locations shown for permanent lateral restraint of webs shall have bracing installed per BCSI sections B3, B7, or B10, as applicable. Apply plates to each face of truss and position as shown above and on the Joint Details, unless noted otherwise. Refer to drawings 160A-Z for standard plate positions. Refer to job's General Notes page for additional information.

Alpine, a division of ITW Building Components Group Inc. shall not be responsible for any deviation from this drawing, any failure to build the truss in conformance with ANSI/TPI 1, or for handling, shipping, installation and bracing of trusses. A seal on this drawing or cover page listing this drawing, indicates acceptance of professional engineering responsibility solely for the design shown. The suitability and use of this drawing for any structure is the responsibility of the Building Designer per ANSI/TPI 1 Sec.2.

For more information see these web sites: Alpine: alpineitw.com; TPI: tpinst.org; SBCA: sbcindustry.com; ICC: iccsafe.org; AWC: awc.org

ALPINE
AN ITW COMPANY
6750 Forum Drive
Suite 305
Orlando FL, 32821

SEQN: 626774 COMN FROM: CDM	Ply: 1 Qty: 5	**Job Number:** 21-5642 Slone- Pamlico Cabin **Truss Label:** C02	Cust: R 215 JRef:1X6O2150013 T6 DrwNo: 181.21.1020.37317 SSB / YK 06/30/2021

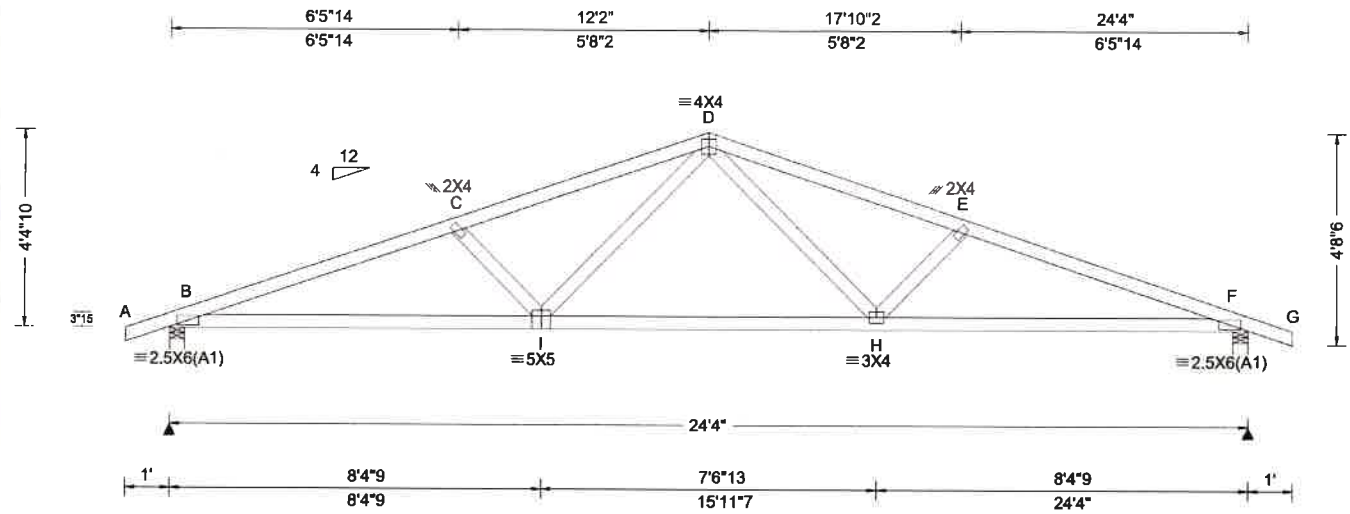

Loading Criteria (psf)

TCLL:	20.00
TCDL:	10.00
BCLL:	0.00
BCDL:	10.00
Des Ld:	40.00
NCBCLL:	10.00
Soffit:	2.00

Load Duration: 1.25
Spacing: 24.0 "

Wind Criteria
Wind Std: ASCE 7-16
Speed: 130 mph
Enclosure: Closed
Risk Category: II
EXP: B Kzt: NA
Mean Height: 15.00 ft
TCDL: 5.0 psf
BCDL: 5.0 psf
MWFRS Parallel Dist: 0 to h/2
C&C Dist a: 3.00 ft
Loc. from endwall: Any
GCpi: 0.18
Wind Duration: 1.60

Snow Criteria (Pg,Pf in PSF)
Pg: NA Ct: NA CAT: NA
Pf: NA Ce: NA
Lu: NA Cs: NA
Snow Duration: NA

Building Code:
FBC 7th Ed. 2020 Res.
TPI Std: 2014
Rep Fac: Yes
FT/RT:20(0)/10(0)
Plate Type(s):
WAVE

Defl/CSI Criteria

PP Deflection in	loc	L/defl	L/#
VERT(LL): 0.118	D	999	240
VERT(CL): 0.235	D	999	180
HORZ(LL): 0.036	H	-	-
HORZ(TL): 0.073	H	-	-

Creep Factor: 2.0
Max TC CSI: 0.421
Max BC CSI: 0.764
Max Web CSI: 0.236

VIEW Ver: 21.01.01A.0521.20

▲ Maximum Reactions (lbs)

	Gravity			Non-Gravity		
Loc	R+	/ R-	/ Rh	/ Rw	/ U	/ RL
B	1052	/-	/-	/579	/49	/71
F	1052	/-	/-	/579	/49	/-

Wind reactions based on MWFRS
B Brg Width = 4.0 Min Req = 1.5
F Brg Width = 4.0 Min Req = 1.5
Bearings B & F are a rigid surface.
Members not listed have forces less than 375#

Maximum Top Chord Forces Per Ply (lbs)

Chords	Tens.	Comp.	Chords	Tens.	Comp.
B - C	480	-2286	D - E	428	-2024
C - D	429	-2023	E - F	479	-2287

Maximum Bot Chord Forces Per Ply (lbs)

Chords	Tens.	Comp.	Chords	Tens.	Comp.
B - I	2123	-410	H - F	2124	-396
I - H	1445	-240			

Maximum Web Forces Per Ply (lbs)

Webs	Tens.	Comp.	Webs	Tens.	Comp.
C - I	178	-389	D - H	619	-74
I - D	617	-75	H - E	178	-388

Lumber
Top chord: 2x4 SP #2;
Bot chord: 2x4 SP #2;
Webs: 2x4 SP #3;

Wind
Wind loads based on MWFRS with additional C&C member design.
Wind loading based on both gable and hip roof types.

YOONHWAK KIM
LICENSE
No. 86367
STATE OF
FLORIDA
PROFESSIONAL ENGINEER

FL REG# 278, Yoonhwak Kim, FL PE #86367
06/30/2021

****WARNING**** READ AND FOLLOW ALL NOTES ON THIS DRAWING!
****IMPORTANT**** FURNISH THIS DRAWING TO ALL CONTRACTORS INCLUDING THE INSTALLERS

Trusses require extreme care in fabricating, handling, shipping, installing and bracing. Refer to and follow the latest edition of BCSI (Building Component Safety Information, by TPI and SBCA) for safety practices prior to performing these functions. Installers shall provide temporary bracing per BCSI. Unless noted otherwise, top chord shall have properly attached structural sheathing and bottom chord shall have a properly attached rigid ceiling. Locations shown for permanent lateral restraint of webs shall have bracing installed per BCSI sections B3, B7, or B10, as applicable. Apply plates to each face of truss and position as shown above and on the Joint Details, unless noted otherwise. Refer to drawings 160A-Z for standard plate positions. Refer to job's General Notes page for additional information.

Alpine, a division of ITW Building Components Group Inc. shall not be responsible for any deviation from this drawing, any failure to build the truss in conformance with ANSI/TPI 1, or for handling, shipping, installation and bracing of trusses. A seal on this drawing or cover page listing this drawing, indicates acceptance of professional engineering responsibility solely for the design shown. The suitability and use of this drawing for any structure is the responsibility of the Building Designer per ANSI/TPI 1 Sec.2.

For more information see these web sites: Alpine: alpineitw.com; TPI: tpinst.org; SBCA: sbcindustry.com; ICC: iccsafe.org; AWC: awc.org

ALPINE
AN ITW COMPANY
6750 Forum Drive
Suite 305
Orlando FL, 32821

SEQN: 626939 COMN FROM: CDM	Ply: 1 Qty: 1	**Job Number:** 21-5642 Slone- Pamlico Cabin **Truss Label:** C03	Cust: R 215 JRef: 1X6O2150013 T23 DrwNo: 181.21.1020.38813 SSB / YK 06/30/2021

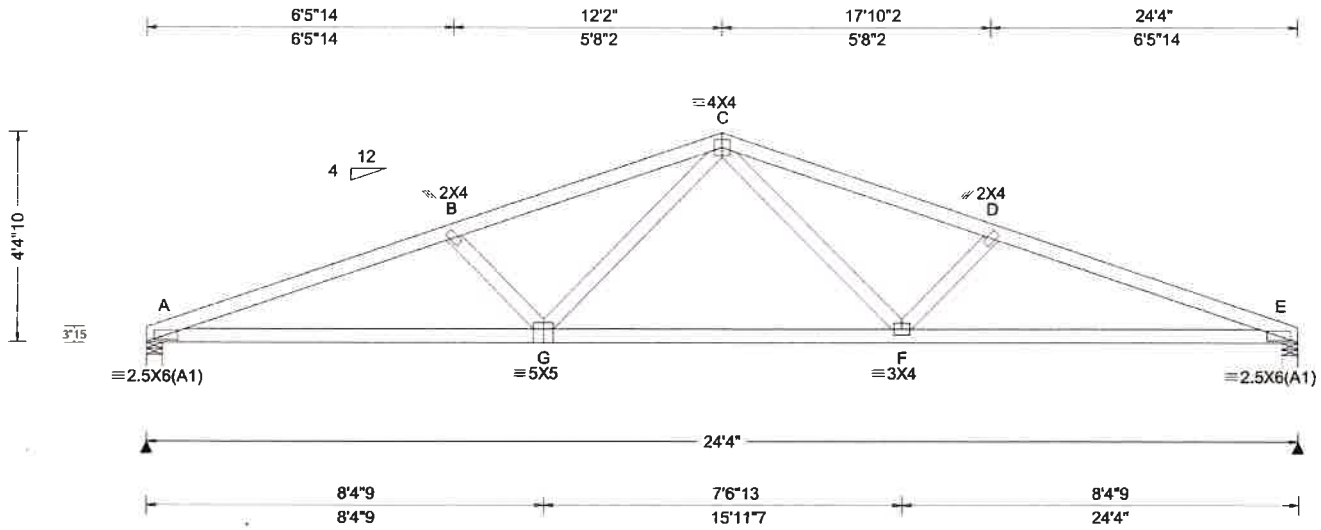

Loading Criteria (psf)

TCLL:	20.00
TCDL:	10.00
BCLL:	0.00
BCDL:	10.00
Des Ld:	40.00
NCBCLL:	10.00
Soffit:	2.00

Load Duration: 1.25
Spacing: 24.0 "

Wind Criteria
Wind Std: ASCE 7-16
Speed: 130 mph
Enclosure: Closed
Risk Category: II
EXP: B Kzt: NA
Mean Height: 15.00 ft
TCDL: 5.0 psf
BCDL: 5.0 psf
MWFRS Parallel Dist: h/2 to h
C&C Dist a: 3.00 ft
Loc. from endwall: not in 9.00 ft
GCpi: 0.18
Wind Duration: 1.60

Snow Criteria (Pg,Pf in PSF)
Pg: NA Ct: NA CAT: NA
Pf: NA Ce: NA
Lu: NA Cs: NA
Snow Duration: NA

Building Code:
FBC 7th Ed. 2020 Res.
TPI Std: 2014
Rep Fac: Yes
FT/RT:20(0)/10(0)
Plate Type(s):
WAVE

Defl/CSI Criteria

PP Deflection in	loc	L/defl	L/#
VERT(LL):	0.116 F	999	240
VERT(CL):	0.235 F	999	180
HORZ(LL):	0.036 F	-	-
HORZ(TL):	0.073 F	-	-

Creep Factor: 2.0
Max TC CSI: 0.453
Max BC CSI: 0.770
Max Web CSI: 0.240

VIEW Ver: 21.01.01A.0521.20

▲ Maximum Reactions (lbs)

	Gravity			Non-Gravity		
Loc	R+	/ R-	/ Rh	/ Rw	/ U	/ RL
A	986	/-	/-	/537	/41	/60
E	986	/-	/-	/537	/41	/-

Wind reactions based on MWFRS
A Brg Width = 4.0 Min Req = 1.5
E Brg Width = 4.0 Min Req = 1.5
Bearings A & E are a rigid surface.
Members not listed have forces less than 375#

Maximum Top Chord Forces Per Ply (lbs)

Chords	Tens.	Comp.	Chords	Tens.	Comp.
A - B	340	-2308	C - D	302	-2043
B - C	303	-2042	D - E	340	-2309

Maximum Bot Chord Forces Per Ply (lbs)

Chords	Tens.	Comp.	Chords	Tens.	Comp.
A - G	2145	-285	F - E	2146	-279
G - F	1456	-158			

Maximum Web Forces Per Ply (lbs)

Webs	Tens.	Comp.	Webs	Tens.	Comp.
B - G	146	-395	C - F	629	-43
G - C	627	-44	F - D	146	-395

Lumber

Top chord: 2x4 SP #2;
Bot chord: 2x4 SP #2;
Webs: 2x4 SP #3;

Wind

Wind loads based on MWFRS with additional C&C member design.

Wind loading based on both gable and hip roof types.

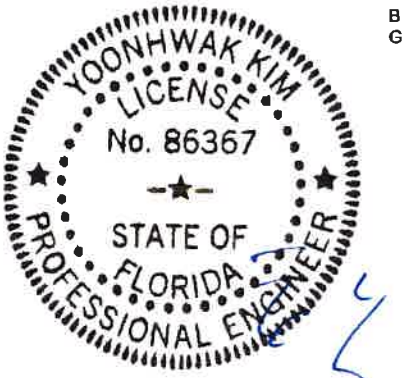

FL REG# 278, Yoonhwak Kim, FL PE #86367
06/30/2021

****WARNING**** READ AND FOLLOW ALL NOTES ON THIS DRAWING!
****IMPORTANT**** FURNISH THIS DRAWING TO ALL CONTRACTORS INCLUDING THE INSTALLERS

Trusses require extreme care in fabricating, handling, shipping, installing and bracing. Refer to and follow the latest edition of BCSI (Building Component Safety Information, by TPI and SBCA) for safety practices prior to performing these functions. Installers shall provide temporary bracing per BCSI. Unless noted otherwise, top chord shall have properly attached structural sheathing and bottom chord shall have a properly attached rigid ceiling. Locations shown for permanent lateral restraint of webs shall have bracing installed per BCSI sections B3, B7, or B10, as applicable. Apply plates to each face of truss and position as shown above and on the Joint Details, unless noted otherwise. Refer to drawings 160A-Z for standard plate positions. Refer to job's General Notes page for additional information.

Alpine, a division of ITW Building Components Group Inc. shall not be responsible for any deviation from this drawing, any failure to build the truss in conformance with ANSI/TPI 1, or for handling, shipping, installation and bracing of trusses. A seal on this drawing or cover page listing this drawing, indicates acceptance of professional engineering responsibility solely for the design shown. The suitability and use of this drawing for any structure is the responsibility of the Building Designer per ANSI/TPI 1 Sec.2.

For more information see these web sites: Alpine: alpineitw.com; TPI: tpinst.org; SBCA: sbcindustry.com; ICC: iccsafe.org; AWC: awc.org

ALPINE
AN ITW COMPANY
6750 Forum Drive
Suite 305
Orlando FL, 32821

SEQN: 626876 GABL FROM: CDM	Ply: 1 Qty: 1	**Job Number:** 21-5642 Slone- Pamlico Cabin **Truss Label:** D01	Cust: R 215 JRef:1X6O2150013 T19 DrwNo: 181.21.1020.40797 SSB / YK 06/30/2021

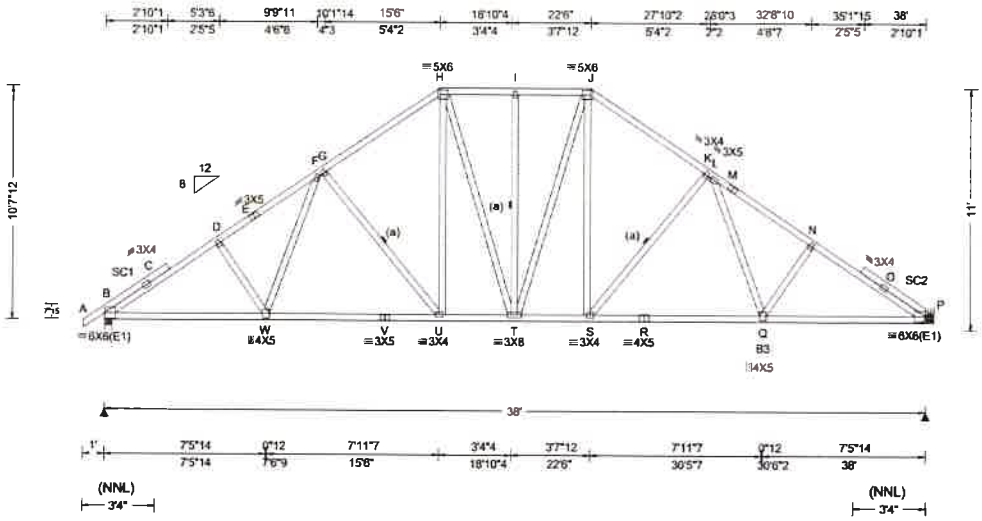

Loading Criteria (psf)		**Wind Criteria**	**Snow Criteria** (Pg,Pf in PSF)	**Defl/CSI Criteria**	
TCLL:	20.00	Wind Std: ASCE 7-16	Pg: NA Ct: NA CAT: NA	PP Deflection in loc L/defl L/#	
TCDL:	10.00	Speed: 130 mph	Pf: NA Ce: NA	VERT(LL): 0.123 S 999 240	
BCLL:	0.00	Enclosure: Closed	Lu: NA Cs: NA	VERT(CL): 0.246 S 999 180	
BCDL:	10.00	Risk Category: II	Snow Duration: NA	HORZ(LL): 0.064 C - -	
Des Ld:	40.00	EXP: B Kzt: NA		HORZ(TL): 0.127 C - -	
NCBCLL:	10.00	Mean Height: 15.00 ft	Building Code:	Creep Factor: 2.0	
Soffit:	2.00	TCDL: 5.0 psf	FBC 7th Ed. 2020 Res.	Max TC CSI: 0.920	
Load Duration:	1.25	BCDL: 5.0 psf	TPI Std: 2014	Max BC CSI: 0.825	
Spacing:	24.0 "	MWFRS Parallel Dist: 0 to h/2	Rep Fac: Yes	Max Web CSI: 0.396	
		C&C Dist a: 3.80 ft	FT/RT:20(0)/10(0)		
		Loc. from endwall: Any	Plate Type(s):		
		GCpi: 0.18	WAVE	VIEW Ver: 21.01.01A.0521.20	
		Wind Duration: 1.60			

▲ Maximum Reactions (lbs)

Loc	Gravity R+	Gravity / R-	Gravity / Rh	Non-Gravity / Rw	Non-Gravity / U	Non-Gravity / RL
B	1705	/-	/-	/905	/-	/129
P	1695	/-	/-	/1103	/-	/-

Wind reactions based on MWFRS
B Brg Width = 4.0 Min Req = 2.0
P Brg Width = - Min Req = -
Bearing B is a rigid surface.
Members not listed have forces less than 375#

Maximum Top Chord Forces Per Ply (lbs)

Chords	Tens.	Comp.	Chords	Tens.	Comp.
B - C	3	-2678	I - J	80	-1538
C - D	0	-2613	J - K	79	-1941
D - E	0	-2501	K - L	51	-2010
E - F	0	-2440	L - M	0	-2505
F - G	0	-1962	M - N	0	-2637
G - H	42	-1899	N - O	0	-2750
H - I	80	-1538	O - P	20	-2815

Maximum Bot Chord Forces Per Ply (lbs)

Chords	Tens.	Comp.	Chords	Tens.	Comp.
B - W	2199	0	T - S	1525	0
W - V	1839	0	S - R	1915	0
V - U	1839	0	R - Q	1915	0
U - T	1491	0	Q - P	2314	0

Maximum Web Forces Per Ply (lbs)

Webs	Tens.	Comp.	Webs	Tens.	Comp.
W - F	502	0	J - S	692	0
G - U	0	-553	S - K	81	-620
H - U	570	0	L - Q	586	0

Lumber

Top chord: 2x4 SP #2;
Bot chord: 2x4 SP #2; B3 2x4 SP M-31;
Webs: 2x4 SP #3;
Stack Chord: SC1 2x4 SP #2;
Stack Chord: SC2 2x4 SP #2;

Bracing

(a) Continuous lateral restraint equally spaced on member.

Plating Notes

All plates are 2X4 except as noted.

Hangers / Ties

(J) Hanger Support Required, by others

Loading

Truss passed check for 20 psf additional bottom chord live load in areas with 42"-high x 24"-wide clearance.

Wind

Wind loads based on MWFRS with additional C&C member design.

Wind loading based on both gable and hip roof types.

Additional Notes

Stacked top chord must NOT be notched or cut in area (NNL). Dropped top chord braced at 24" oc intervals. Attach stacked top chord (SC) to dropped top chord in notchable area using 3x4 tie-plates 24" oc. Center plate on stacked/dropped chord interface, plate length perpendicular to chord length. Splice top chord in notchable area using 3x6.

YOONHWAK KIM
LICENSE
No. 86367
STATE OF FLORIDA
PROFESSIONAL ENGINEER

FL REG# 278, Yoonhwak Kim, FL PE #86367
06/30/2021

****WARNING**** READ AND FOLLOW ALL NOTES ON THIS DRAWING!
****IMPORTANT**** FURNISH THIS DRAWING TO ALL CONTRACTORS INCLUDING THE INSTALLERS

Trusses require extreme care in fabricating, handling, shipping, installing and bracing. Refer to and follow the latest edition of BCSI (Building Component Safety Information, by TPI and SBCA) for safety practices prior to performing these functions. Installers shall provide temporary bracing per BCSI. Unless noted otherwise, top chord shall have properly attached structural sheathing and bottom chord shall have a properly attached rigid ceiling. Locations shown for permanent lateral restraint of webs shall have bracing installed per BCSI sections B3, B7, or B10, as applicable. Apply plates to each face of truss and position as shown above and on the Joint Details, unless noted otherwise. Refer to drawings 160A-Z for standard plate positions. Refer to job's General Notes page for additional information.

Alpine, a division of ITW Building Components Group Inc. shall not be responsible for any deviation from this drawing, any failure to build the truss in conformance with ANSI/TPI 1, or for handling, shipping, installation and bracing of trusses. A seal on this drawing or cover page listing this drawing, indicates acceptance of professional engineering responsibility solely for the design shown. The suitability and use of this drawing for any structure is the responsibility of the Building Designer per ANSI/TPI 1 Sec.2.

For more information see these web sites: Alpine: alpineitw.com; TPI: tpinst.org; SBCA: sbcindustry.com; ICC: iccsafe.org; AWC: awc.org

ALPINE
AN ITW COMPANY
6750 Forum Drive
Suite 305
Orlando FL, 32821

SEQN: 626824 COMN FROM: CDM	Ply: 1 Qty: 9	**Job Number:** 21-5642 Slone- Pamlico Cabin **Truss Label:** D02	Cust: R 215 JRef:1X6O2150013 T5 DrwNo: 181.21.1020.42840 SSB / YK 06/30/2021

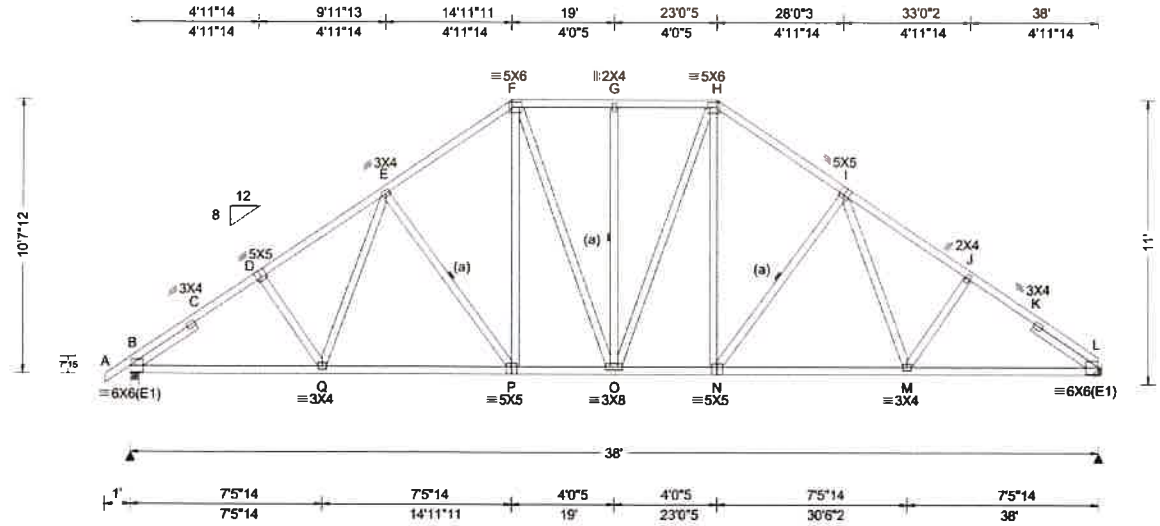

Loading Criteria (psf)

TCLL:	20.00
TCDL:	10.00
BCLL:	0.00
BCDL:	10.00
Des Ld:	40.00
NCBCLL:	10.00
Soffit:	2.00

Load Duration: 1.25
Spacing: 24.0 "

Wind Criteria
Wind Std: ASCE 7-16
Speed: 130 mph
Enclosure: Closed
Risk Category: II
EXP: B Kzt: NA
Mean Height: 15.00 ft
TCDL: 5.0 psf
BCDL: 5.0 psf
MWFRS Parallel Dist: 0 to h/2
C&C Dist a: 3.80 ft
Loc. from endwall: Any
GCpi: 0.18
Wind Duration: 1.60

Snow Criteria (Pg,Pf in PSF)
Pg: NA Ct: NA CAT: NA
Pf: NA Ce: NA
Lu: NA Cs: NA
Snow Duration: NA

Building Code:
FBC 7th Ed. 2020 Res.
TPI Std: 2014
Rep Fac: Yes
FT/RT:20(0)/10(0)
Plate Type(s):
WAVE

Defl/CSI Criteria

PP Deflection in	loc	L/defl	L/#
VERT(LL): 0.124	N	999	240
VERT(CL): 0.229	N	999	180
HORZ(LL): 0.064	M	-	-
HORZ(TL): 0.118	M	-	-

Creep Factor: 2.0
Max TC CSI: 0.412
Max BC CSI: 0.906
Max Web CSI: 0.257

VIEW Ver: 21.01.01A.0521.20

▲ Maximum Reactions (lbs)

	Gravity			Non-Gravity		
Loc	R+	/ R-	/ Rh	/ Rw	/ U	/ RL
B	1883	/-	/-	/956	/51	/212
L	1812	/-	/-	/907	/43	/-

Wind reactions based on MWFRS
B Brg Width = 4.0 Min Req = 2.2
L Brg Width = - Min Req = -
Bearing B is a rigid surface.
Members not listed have forces less than 375#

Maximum Top Chord Forces Per Ply (lbs)

Chords	Tens.	Comp.	Chords	Tens.	Comp.
B - C	335	-2814	G - H	378	-1742
C - D	347	-2724	H - I	392	-2118
D - E	381	-2632	I - J	383	-2640
E - F	392	-2118	J - K	349	-2732
F - G	378	-1742	K - L	334	-2822

Maximum Bot Chord Forces Per Ply (lbs)

Chords	Tens.	Comp.	Chords	Tens.	Comp.
B - Q	2232	-226	O - N	1684	-64
Q - P	1988	-149	N - M	1989	-149
P - O	1683	-64	M - L	2243	-229

Maximum Web Forces Per Ply (lbs)

Webs	Tens.	Comp.	Webs	Tens.	Comp.
Q - E	399	-21	H - N	674	-55
E - P	145	-517	N - I	145	-518
F - P	674	-56	I - M	409	-24

Lumber

Top chord: 2x4 SP #2;
Bot chord: 2x4 SP #2;
Webs: 2x4 SP #3;
Lt Slider: 2x4 SP #3; block length = 3.010'
Rt Slider: 2x4 SP #3; block length = 3.010'

Bracing

(a) Continuous lateral restraint equally spaced on member.

Loading

Truss passed check for 20 psf additional bottom chord live load in areas with 42"-high x 24"-wide clearance.

Wind

Wind loads based on MWFRS with additional C&C member design.

Wind loading based on both gable and hip roof types.

YOONHWAK KIM LICENSE No. 86367 STATE OF FLORIDA PROFESSIONAL ENGINEER

FL REG# 278, Yoonhwak Kim, FL PE #86367
06/30/2021

****WARNING**** READ AND FOLLOW ALL NOTES ON THIS DRAWING!
****IMPORTANT**** FURNISH THIS DRAWING TO ALL CONTRACTORS INCLUDING THE INSTALLERS

Trusses require extreme care in fabricating, handling, shipping, installing and bracing. Refer to and follow the latest edition of BCSI (Building Component Safety Information, by TPI and SBCA) for safety practices prior to performing these functions. Installers shall provide temporary bracing per BCSI. Unless noted otherwise, top chord shall have properly attached structural sheathing and bottom chord shall have a properly attached rigid ceiling. Locations shown for permanent lateral restraint of webs shall have bracing installed per BCSI sections B3, B7, or B10, as applicable. Apply plates to each face of truss and position as shown above and on the Joint Details, unless noted otherwise. Refer to drawings 160A-Z for standard plate positions. Refer to job's General Notes page for additional information.

Alpine, a division of ITW Building Components Group Inc. shall not be responsible for any deviation from this drawing, any failure to build the truss in conformance with ANSI/TPI 1, or for handling, shipping, installation and bracing of trusses. A seal on this drawing or cover page listing this drawing, indicates acceptance of professional engineering responsibility solely for the design shown. The suitability and use of this drawing for any structure is the responsibility of the Building Designer per ANSI/TPI 1 Sec.2.

For more information see these web sites: Alpine: alpineitw.com; TPI: tpinst.org; SBCA: sbcindustry.com; ICC: iccsafe.org; AWC: awc.org

ALPINE AN ITW COMPANY
6750 Forum Drive
Suite 305
Orlando FL, 32821

SEQN: 626818 COMN FROM: CDM	Ply: 1 Qty: 1	**Job Number:** 21-5642 Slone- Pamlico Cabin **Truss Label:** D03	Cust: R 215 JRef: 1X6O2150013 T11 DrwNo: 181.21.1020.47953 SSB / YK 06/30/2021

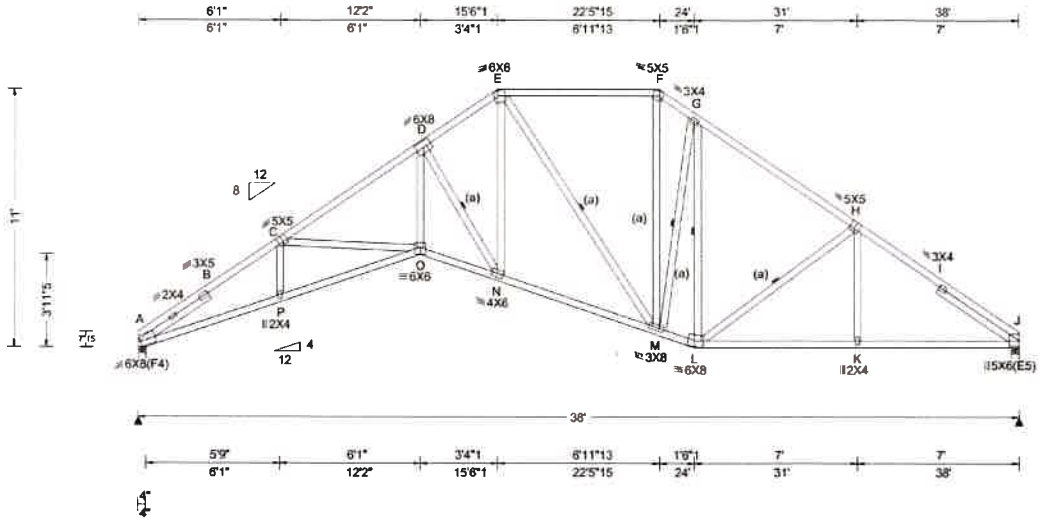

Loading Criteria (psf)	Wind Criteria	Snow Criteria (Pg,Pf in PSF)	Defl/CSI Criteria
TCLL: 20.00 TCDL: 10.00 BCLL: 0.00 BCDL: 10.00 Des Ld: 40.00 NCBCLL: 10.00 Soffit: 2.00 Load Duration: 1.25 Spacing: 24.0 "	Wind Std: ASCE 7-16 Speed: 130 mph Enclosure: Closed Risk Category: II EXP: B Kzt: NA Mean Height: 15.09 ft TCDL: 5.0 psf BCDL: 5.0 psf MWFRS Parallel Dist: h to 2h C&C Dist a: 3.80 ft Loc. from endwall: not in 9.00 ft GCpi: 0.18 Wind Duration: 1.60	Pg: NA Ct: NA CAT: NA Pf: NA Ce: NA Lu: NA Cs: NA Snow Duration: NA Building Code: FBC 7th Ed. 2020 Res. TPI Std: 2014 Rep Fac: Yes FT/RT:20(0)/10(0) Plate Type(s): WAVE	PP Deflection in loc L/defl L/# VERT(LL): 0.273 O 999 240 VERT(CL): 0.578 O 789 180 HORZ(LL): 0.196 K - - HORZ(TL): 0.415 K - - Creep Factor: 2.0 Max TC CSI: 0.916 Max BC CSI: 0.957 Max Web CSI: 0.850 VIEW Ver: 21.01.01A.0521.20

▲ Maximum Reactions (lbs)

	Gravity			Non-Gravity		
Loc	R+	/ R-	/ Rh	/ Rw	/ U	/ RL
A	1614	/-	/-	/930	/-	/203
J	1604	/-	/-	/928	/-	/-

Wind reactions based on MWFRS
A Brg Width = 4.0 Min Req = 1.8
J Brg Width = 4.0 Min Req = 1.9
Bearings A & J are a rigid surface.
Members not listed have forces less than 375#

Maximum Top Chord Forces Per Ply (lbs)

Chords	Tens.	Comp.	Chords	Tens.	Comp.
A - B	0	-4269	F - G	58	-1791
B - C	0	-4161	G - H	10	-1928
C - D	0	-3701	H - I	0	-2311
D - E	0	-2362	I - J	123	-2434
E - F	29	-1487			

Maximum Bot Chord Forces Per Ply (lbs)

Chords	Tens.	Comp.	Chords	Tens.	Comp.
A - P	3573	0	M - L	1584	0
P - O	3602	0	L - K	1910	0
O - N	3120	0	K - J	1913	0
N - M	2037	0			

Maximum Web Forces Per Ply (lbs)

Webs	Tens.	Comp.	Webs	Tens.	Comp.
C - O	146	-413	E - M	9	-761
O - D	2231	0	M - F	689	-106
D - N	0	-2080	L - H	106	-518
N - E	1580	0			

Lumber

Top chord: 2x4 SP #2;
Bot chord: 2x4 SP #2;
Webs: 2x4 SP #3;
Lt Slider: 2x4 SP #3; block length = 3.632'
Rt Slider: 2x4 SP #3; block length = 4.130'

Bracing

(a) Continuous lateral restraint equally spaced on member.

Wind

Wind loads based on MWFRS with additional C&C member design.

Wind loading based on both gable and hip roof types.

Additional Notes

Refer to DWG PB160160118 for piggyback details.

YOONHWAK KIM
LICENSE
No. 86367
STATE OF
FLORIDA
PROFESSIONAL ENGINEER

FL REG# 278, Yoonhwak Kim, FL PE #86367
06/30/2021

****WARNING**** READ AND FOLLOW ALL NOTES ON THIS DRAWING!
****IMPORTANT**** FURNISH THIS DRAWING TO ALL CONTRACTORS INCLUDING THE INSTALLERS

Trusses require extreme care in fabricating, handling, shipping, installing and bracing. Refer to and follow the latest edition of BCSI (Building Component Safety Information, by TPI and SBCA) for safety practices prior to performing these functions. Installers shall provide temporary bracing per BCSI. Unless noted otherwise, top chord shall have properly attached structural sheathing and bottom chord shall have a properly attached rigid ceiling. Locations shown for permanent lateral restraint of webs shall have bracing installed per BCSI sections B3, B7, or B10, as applicable. Apply plates to each face of truss and position as shown above and on the Joint Details, unless noted otherwise. Refer to drawings 160A-Z for standard plate positions. Refer to job's General Notes page for additional information.

Alpine, a division of ITW Building Components Group Inc. shall not be responsible for any deviation from this drawing, any failure to build the truss in conformance with ANSI/TPI 1, or for handling, shipping, installation and bracing of trusses. A seal on this drawing or cover page listing this drawing, indicates acceptance of professional engineering responsibility solely for the design shown. The suitability and use of this drawing for any structure is the responsibility of the Building Designer per ANSI/TPI 1 Sec.2.

For more information see these web sites: Alpine: alpineitw.com; TPI: tpinst.org; SBCA: sbcindustry.com; ICC: iccsafe.org; AWC: awc.org

ALPINE
AN ITW COMPANY
6750 Forum Drive
Suite 305
Orlando FL, 32821

SEQN: 626798 COMN FROM: CDM	Ply: 1 Qty: 4	**Job Number:** 21-5642 Slone- Pamlico Cabin **Truss Label:** D04	Cust: R 215 JRef: 1X6O2150013 T28 DrwNo: 181.21.1020.49423 SSB / YK 06/30/2021

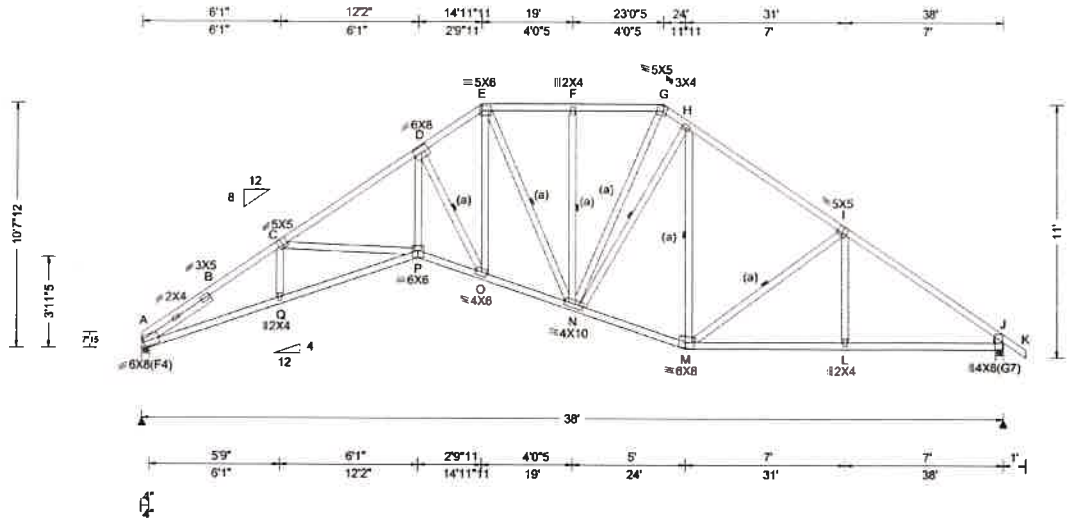

Loading Criteria (psf)	**Wind Criteria**	**Snow Criteria** (Pg,Pf in PSF)	**Defl/CSI Criteria**
TCLL: 20.00	Wind Std: ASCE 7-16	Pg: NA Ct: NA CAT: NA	PP Deflection in loc L/defl L/#
TCDL: 10.00	Speed: 130 mph	Pf: NA Ce: NA	VERT(LL): 0.273 P 999 240
BCLL: 0.00	Enclosure: Closed	Lu: NA Cs: NA	VERT(CL): 0.575 P 792 180
BCDL: 10.00	Risk Category: II	Snow Duration: NA	HORZ(LL): 0.193 L - -
Des Ld: 40.00	EXP: B Kzt: NA		HORZ(TL): 0.408 L - -
NCBCLL: 10.00	Mean Height: 15.00 ft	Building Code:	Creep Factor: 2.0
Soffit: 2.00	TCDL: 5.0 psf	FBC 7th Ed. 2020 Res.	Max TC CSI: 0.869
Load Duration: 1.25	BCDL: 5.0 psf	TPI Std: 2014	Max BC CSI: 0.954
Spacing: 24.0 "	MWFRS Parallel Dist: h to 2h	Rep Fac: Yes	Max Web CSI: 0.853
	C&C Dist a: 3.80 ft	FT/RT:20(0)/10(0)	
	Loc. from endwall: not in 9.00 ft	Plate Type(s):	
	GCpi: 0.18	WAVE	VIEW Ver: 21.01.01A.0521.20
	Wind Duration: 1.60		

▲ Maximum Reactions (lbs)

	Gravity			Non-Gravity		
Loc	R+	/ R-	/ Rh	/ Rw	/ U	/ RL
A	1614	/-	/-	/918	/-	/212
J	1675	/-	/-	/964	/-	/-

Wind reactions based on MWFRS
A Brg Width = 4.0 Min Req = 1.8
J Brg Width = 4.0 Min Req = 2.0
Bearings A & J are a rigid surface.
Members not listed have forces less than 375#

Maximum Top Chord Forces Per Ply (lbs)

Chords	Tens.	Comp.	Chords	Tens.	Comp.
A - B	291	-4267	F - G	295	-1776
B - C	311	-4159	G - H	300	-1737
C - D	311	-3703	H - I	282	-1926
D - E	321	-2493	I - J	227	-2418
E - F	296	-1777			

Maximum Bot Chord Forces Per Ply (lbs)

Chords	Tens.	Comp.	Chords	Tens.	Comp.
A - Q	3571	-193	N - M	1592	-34
Q - P	3600	-198	M - L	1894	-99
P - O	3126	-78	L - J	1897	-98
O - N	2126	-21			

Maximum Web Forces Per Ply (lbs)

Webs	Tens.	Comp.	Webs	Tens.	Comp.
C - P	107	-408	E - N	58	-542
P - D	2240	-44	N - G	957	-144
D - O	130	-2128	M - I	92	-493
O - E	1660	-68			

Lumber

Top chord: 2x4 SP #2;
Bot chord: 2x4 SP #2;
Webs: 2x4 SP #3;
Lt Slider: 2x4 SP #3; block length = 3.632'
Rt Stub Wedge: 2x4 SP #3;

Bracing

(a) Continuous lateral restraint equally spaced on member.

Wind

Wind loads based on MWFRS with additional C&C member design.

Wind loading based on both gable and hip roof types.

Additional Notes

Refer to DWG PB160160118 for piggyback details.

YOONHWAK KIM
LICENSE
No. 86367
STATE OF
FLORIDA
PROFESSIONAL ENGINEER

FL REG# 278, Yoonhwak Kim, FL PE #86367
06/30/2021

****WARNING**** READ AND FOLLOW ALL NOTES ON THIS DRAWING!
****IMPORTANT**** FURNISH THIS DRAWING TO ALL CONTRACTORS INCLUDING THE INSTALLERS

Trusses require extreme care in fabricating, handling, shipping, installing and bracing. Refer to and follow the latest edition of BCSI (Building Component Safety Information, by TPI and SBCA) for safety practices prior to performing these functions. Installers shall provide temporary bracing per BCSI. Unless noted otherwise, top chord shall have properly attached structural sheathing and bottom chord shall have a properly attached rigid ceiling. Locations shown for permanent lateral restraint of webs shall have bracing installed per BCSI sections B3, B7, or B10, as applicable. Apply plates to each face of truss and position as shown above and on the Joint Details, unless noted otherwise. Refer to drawings 160A-Z for standard plate positions. Refer to job's General Notes page for additional information.

Alpine, a division of ITW Building Components Group Inc. shall not be responsible for any deviation from this drawing, any failure to build the truss in conformance with ANSI/TPI 1, or for handling, shipping, installation and bracing of trusses. A seal on this drawing or cover page listing this drawing, indicates acceptance of professional engineering responsibility solely for the design shown. The suitability and use of this drawing for any structure is the responsibility of the Building Designer per ANSI/TPI 1 Sec.2.

For more information see these web sites: Alpine: alpineitw.com; TPI: tpinst.org; SBCA: sbcindustry.com; ICC: iccsafe.org; AWC: awc.org

ALPINE
AN ITW COMPANY
6750 Forum Drive
Suite 305
Orlando FL, 32821

SEQN: 626801 COMN FROM: CDM	Ply: 1 Qty: 5	**Job Number:** 21-5642 Stone- Pamlico Cabin **Truss Label:** D05	Cust: R 215 JRef: 1X6O2150013 T27 DrwNo: 181.21.1020.50907 SSB / YK 06/30/2021

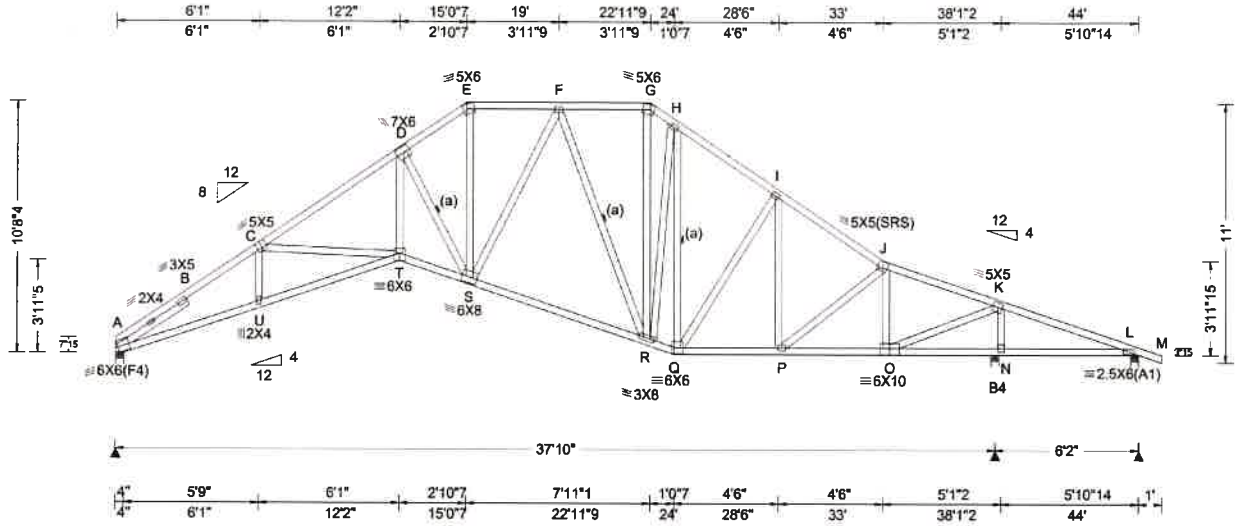

Loading Criteria (psf)

TCLL:	20.00
TCDL:	10.00
BCLL:	0.00
BCDL:	10.00
Des Ld:	40.00
NCBCLL:	10.00
Soffit:	2.00

Load Duration: 1.25
Spacing: 24.0 "

Wind Criteria
Wind Std: ASCE 7-16
Speed: 130 mph
Enclosure: Closed
Risk Category: II
EXP: B Kzt: NA
Mean Height: 15.00 ft
TCDL: 5.0 psf
BCDL: 5.0 psf
MWFRS Parallel Dist: h to 2h
C&C Dist a: 4.40 ft
Loc. from endwall: not in 13.00 ft
GCpi: 0.18
Wind Duration: 1.60

Snow Criteria (Pg,Pf in PSF)
Pg: NA Ct: NA CAT: NA
Pf: NA Ce: NA
Lu: NA Cs: NA
Snow Duration: NA

Building Code:
FBC 7th Ed. 2020 Res.
TPI Std: 2014
Rep Fac: Yes
FT/RT:20(0)/10(0)
Plate Type(s):
WAVE

Defl/CSI Criteria

PP Deflection in	loc	L/defl	L/#
VERT(LL): 0.257	T	999	240
VERT(CL): 0.535	T	848	180
HORZ(LL): 0.174	O	-	-
HORZ(TL): 0.363	O	-	-

Creep Factor: 2.0
Max TC CSI: 0.804
Max BC CSI: 0.918
Max Web CSI: 0.908

VIEW Ver: 21.01.01A.0521.20

▲ Maximum Reactions (lbs)

	Gravity			Non-Gravity		
Loc	R+	/ R-	/ Rh	/ Rw	/ U	/ RL
A	1544	/-	/-	/894	/-	/209
N	2272	/-	/-	/1277	/-	/-
L	132	/-245	/-	/48	/122	/-

Wind reactions based on MWFRS
A Brg Width = 4.0 Min Req = 1.7
N Brg Width = 4.0 Min Req = 1.5
L Brg Width = 4.0 Min Req = 1.5
Bearings A, N, & L are a rigid surface.
Members not listed have forces less than 375#

Maximum Top Chord Forces Per Ply (lbs)

Chords	Tens.	Comp.	Chords	Tens.	Comp.
A - B	0	-4061	G - H	34	-1593
B - C	0	-3952	H - I	15	-1655
C - D	0	-3475	I - J	0	-1802
D - E	0	-2280	J - K	34	-1303
E - F	0	-1853	K - L	1211	0
F - G	25	-1327			

Maximum Bot Chord Forces Per Ply (lbs)

Chords	Tens.	Comp.	Chords	Tens.	Comp.
A - U	3396	0	Q - P	1441	0
U - T	3422	0	P - O	1258	0
T - S	2921	0	O - N	0	-2042
S - R	1714	0	N - L	0	-1118
R - Q	1395	0			

Maximum Web Forces Per Ply (lbs)

Webs	Tens.	Comp.	Webs	Tens.	Comp.
C - T	150	-430	F - R	0	-780
T - D	2097	0	R - G	702	-44
D - S	0	-2004	J - O	0	-993
E - S	1045	0	O - K	2385	0
S - F	543	-16	K - N	14	-2053

Lumber

Top chord: 2x4 SP #2;
Bot chord: 2x4 SP #2; B4 2x4 SP M-31;
Webs: 2x4 SP #3;
Lt Slider: 2x4 SP #3; block length = 3.632'

Bracing

(a) Continuous lateral restraint equally spaced on member.

Plating Notes

All plates are 3X4 except as noted.

Wind

Wind loads based on MWFRS with additional C&C member design.

Wind loading based on both gable and hip roof types.

Additional Notes

Negative reaction(s) of -245# MAX. from a non-wind load case requires uplift connection. See Maximum Reactions.

Refer to DWG PB160160118 for piggyback details.

Shim all supports to solid bearing.

YOONHWAK KIM
LICENSE
No. 86367
STATE OF
FLORIDA
PROFESSIONAL ENGINEER

FL REG# 278, Yoonhwak Kim, FL PE #86367
06/30/2021

****WARNING**** READ AND FOLLOW ALL NOTES ON THIS DRAWING!
****IMPORTANT**** FURNISH THIS DRAWING TO ALL CONTRACTORS INCLUDING THE INSTALLERS

Trusses require extreme care in fabricating, handling, shipping, installing and bracing. Refer to and follow the latest edition of BCSI (Building Component Safety Information, by TPI and SBCA) for safety practices prior to performing these functions. Installers shall provide temporary bracing per BCSI. Unless noted otherwise, top chord shall have properly attached structural sheathing and bottom chord shall have a properly attached rigid ceiling. Locations shown for permanent lateral restraint of webs shall have bracing installed per BCSI sections B3, B7, or B10, as applicable. Apply plates to each face of truss and position as shown above and on the Joint Details, unless noted otherwise. Refer to drawings 160A-Z for standard plate positions. Refer to job's General Notes page for additional information.

Alpine, a division of ITW Building Components Group Inc. shall not be responsible for any deviation from this drawing, any failure to build the truss in conformance with ANSI/TPI 1, or for handling, shipping, installation and bracing of trusses. A seal on this drawing or cover page listing this drawing, indicates acceptance of professional engineering responsibility solely for the design shown. The suitability and use of this drawing for any structure is the responsibility of the Building Designer per ANSI/TPI 1 Sec.2.

For more information see these web sites: Alpine: alpineitw.com; TPI: tpinst.org; SBCA: sbcindustry.com; ICC: iccsafe.org; AWC: awc.org

ALPINE
AN ITW COMPANY
6750 Forum Drive
Suite 305
Orlando FL, 32821

SEQN: 626934 COMN FROM: CDM	Ply: 2 Qty: 1	**Job Number:** 21-5642 Slone- Pamlico Cabin **Truss Label:** D06	Cust: R 215 JRef:1X6O2150013 T17 DrwNo: 181.21.1020.56310 SSB / YK 06/30/2021

2 Complete Trusses Required

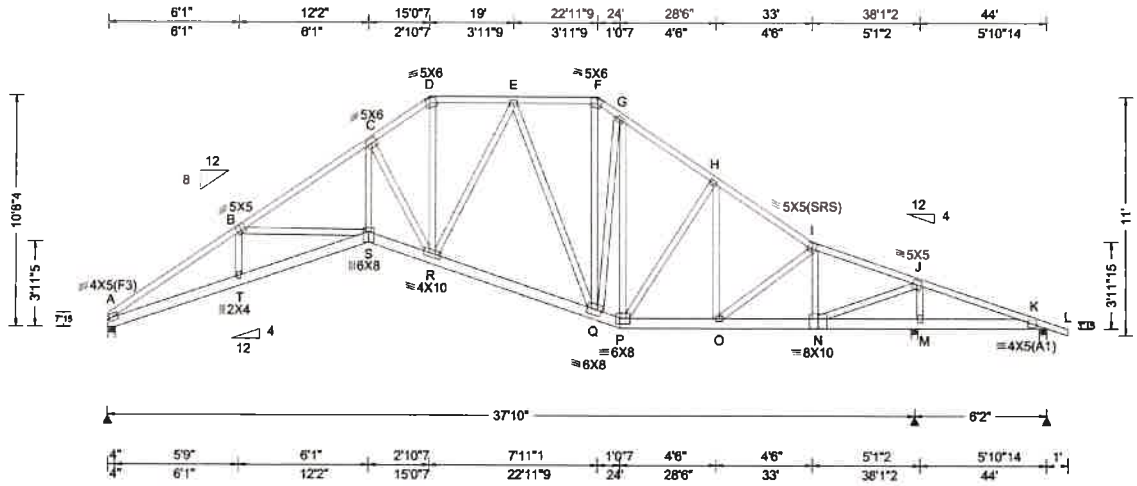

Loading Criteria (psf)
TCLL: 20.00
TCDL: 10.00
BCLL: 0.00
BCDL: 10.00
Des Ld: 40.00
NCBCLL: 0.00
Soffit: 2.00
Load Duration: 1.25
Spacing: 24.0 "

Wind Criteria
Wind Std: ASCE 7-16
Speed: 130 mph
Enclosure: Closed
Risk Category: II
EXP: B Kzt: NA
Mean Height: 15.00 ft
TCDL: 5.0 psf
BCDL: 5.0 psf
MWFRS Parallel Dist: 0 to h/2
C&C Dist a: 4.40 ft
Loc. from endwall: not in 13.00 ft
GCpi: 0.18
Wind Duration: 1.60

Snow Criteria (Pg,Pf in PSF)
Pg: NA Ct: NA CAT: NA
Pf: NA Ce: NA
Lu: NA Cs: NA
Snow Duration: NA

Building Code:
FBC 7th Ed. 2020 Res.
TPI Std: 2014
Rep Fac: No
FT/RT:20(0)/10(0)
Plate Type(s):
WAVE

Defl/CSI Criteria

PP Deflection in	loc	L/defl	L/#
VERT(LL): 0.214	S	999	240
VERT(CL): 0.441	S	999	180
HORZ(LL): 0.122	N	-	-
HORZ(TL): 0.252	N	-	-

Creep Factor: 2.0
Max TC CSI: 0.718
Max BC CSI: 0.391
Max Web CSI: 0.884

VIEW Ver: 21.01.01A.0521.20

▲ Maximum Reactions (lbs)

	Gravity			Non-Gravity		
Loc	R+	/ R-	/ Rh	/ Rw	/ U	/ RL
A	2347	/-	/-	/35	/-	/-
M	4040	/-	/0	/68	/-	/-
K	-	/-705	/-	/-	/46	/-

Wind reactions based on MWFRS
A Brg Width = 4.0 Min Req = 1.5
M Brg Width = 4.0 Min Req = 1.5
K Brg Width = 4.0 Min Req = 1.5
Bearings A, M, & K are a rigid surface.
Members not listed have forces less than 375#

Maximum Top Chord Forces Per Ply (lbs)

Chords	Tens.	Comp.	Chords	Tens.	Comp.
A - B	0	-3063	F - G	0	-1834
B - C	0	-3049	G - H	0	-1786
C - D	0	-2159	H - I	0	-1735
D - E	0	-1776	I - J	0	-1079
E - F	0	-1543	J - K	1319	0

Maximum Bot Chord Forces Per Ply (lbs)

Chords	Tens.	Comp.	Chords	Tens.	Comp.
A - T	2575	0	P - O	1422	0
T - S	2642	0	O - N	1082	0
S - R	2580	0	N - M	0	-2290
R - Q	1791	0	M - K	0	-1235
Q - P	1586	0			

Maximum Web Forces Per Ply (lbs)

Webs	Tens.	Comp.	Webs	Tens.	Comp.
S - C	1648	0	P - G	0	-660
C - R	0	-1510	O - I	440	0
D - R	1083	0	I - N	0	-1019
Q - F	914	0	N - J	2322	0
Q - G	552	0	J - M	0	-1802

Lumber
Top chord: 2x4 SP #2;
Bot chord: 2x6 SP 2400f-2.0E;
Webs: 2x4 SP #3;

Nailnote
Nail Schedule:0.128"x3", min. nails
Top Chord: 1 Row @12.00" o.c.
Bot Chord: 1 Row @12.00" o.c.
Webs : 1 Row @ 4" o.c.
Use equal spacing between rows and stagger nails in each row to avoid splitting.

Special Loads
——(Lumber Dur.Fac.=1.25 / Plate Dur.Fac.=1.25)

TC: From	64 plf at	0.00 to	64 plf at	33.00
TC: From	61 plf at	33.00 to	61 plf at	45.00
BC: From	21 plf at	0.00 to	21 plf at	24.00
BC: From	20 plf at	24.00 to	20 plf at	44.00
BC: From	4 plf at	44.00 to	4 plf at	45.00

BC: 2088 lb Conc. Load at 22.02

Plating Notes
All plates are 3X4 except as noted.

Wind
Wind loads and reactions based on MWFRS.
Wind loading based on both gable and hip roof types.
It is the responsibility of the Building Designer and Truss Fabricator to review this drawing prior to cutting lumber to verify that all data,including dimensions and loads, conform to the architectural plans/specifications and fabricators truss layout.

Additional Notes
Negative reaction(s) of -705# MAX. from a non-wind load case requires uplift connection. See Maximum Reactions.
Refer to DWG PB160160118 for piggyback details.
Shim all supports to solid bearing.

YOONHWAK KIM
LICENSE
No. 86367
STATE OF
FLORIDA
PROFESSIONAL ENGINEER

FL REG# 278, Yoonhwak Kim, FL PE #86367
06/30/2021

****WARNING**** READ AND FOLLOW ALL NOTES ON THIS DRAWING!
****IMPORTANT**** FURNISH THIS DRAWING TO ALL CONTRACTORS INCLUDING THE INSTALLERS

Trusses require extreme care in fabricating, handling, shipping, installing and bracing. Refer to and follow the latest edition of BCSI (Building Component Safety Information, by TPI and SBCA) for safety practices prior to performing these functions. Installers shall provide temporary bracing per BCSI. Unless noted otherwise, top chord shall have properly attached structural sheathing and bottom chord shall have a properly attached rigid ceiling. Locations shown for permanent lateral restraint of webs shall have bracing installed per BCSI sections B3, B7, or B10, as applicable. Apply plates to each face of truss and position as shown above and on the Joint Details, unless noted otherwise. Refer to drawings 160A-Z for standard plate positions. Refer to job's General Notes page for additional information.

Alpine, a division of ITW Building Components Group Inc. shall not be responsible for any deviation from this drawing, any failure to build the truss in conformance with ANSI/TPI 1, or for handling, shipping, installation and bracing of trusses. A seal on this drawing or cover page listing this drawing, indicates acceptance of professional engineering responsibility solely for the design shown. The suitability and use of this drawing for any structure is the responsibility of the Building Designer per ANSI/TPI 1 Sec.2.
For more information see these web sites: Alpine: alpineitw.com; TPI: tpinst.org; SBCA: sbcindustry.com; ICC: iccsafe.org; AWC: awc.org

ALPINE
AN ITW COMPANY
6750 Forum Drive
Suite 305
Orlando FL, 32821

SEQN: 626930 COMN FROM: CDM	Ply: 2 Qty: 1	**Job Number:** 21-5642 Slone- Pamlico Cabin **Truss Label:** D07	Cust: R 215 JRef: 1X6O2150013 T16 DrwNo: 181.21.1021.01303 SSB / YK 06/30/2021

2 Complete Trusses Required

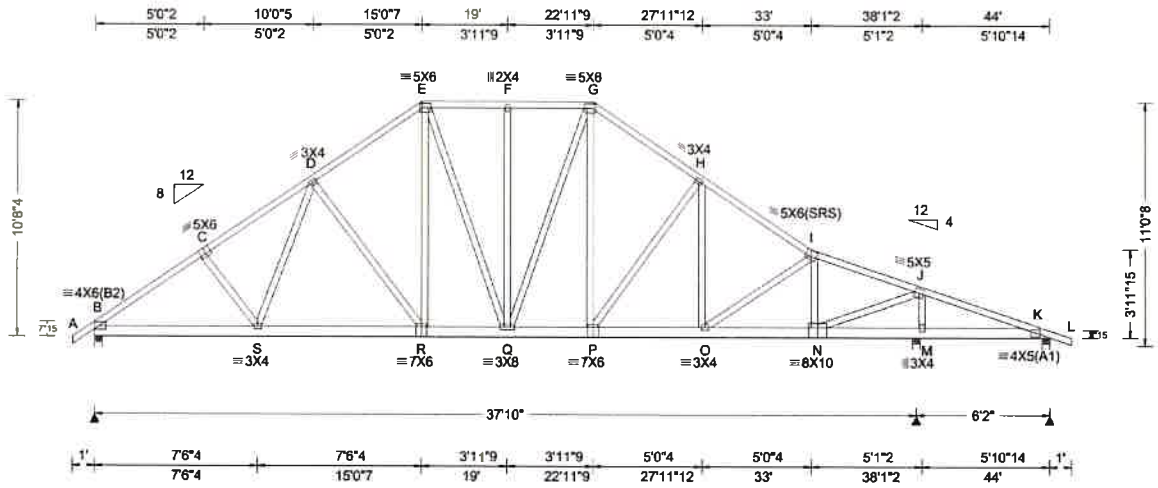

Loading Criteria (psf)

TCLL:	20.00
TCDL:	10.00
BCLL:	0.00
BCDL:	10.00
Des Ld:	40.00
NCBCLL:	0.00
Soffit:	2.00

Load Duration: 1.25
Spacing: 24.0 "

Wind Criteria
Wind Std: ASCE 7-16
Speed: 130 mph
Enclosure: Closed
Risk Category: II
EXP: B Kzt: NA
Mean Height: 15.00 ft
TCDL: 5.0 psf
BCDL: 5.0 psf
MWFRS Parallel Dist: 0 to h/2
C&C Dist a: 4.40 ft
Loc. from endwall: not in 13.00 ft
GCpi: 0.18
Wind Duration: 1.60

Snow Criteria (Pg,Pf in PSF)
Pg: NA Ct: NA CAT: NA
Pf: NA Ce: NA
Lu: NA Cs: NA
Snow Duration: NA

Building Code:
FBC 7th Ed. 2020 Res.
TPI Std: 2014
Rep Fac: No
FT/RT:20(0)/10(0)
Plate Type(s):
WAVE

Defl/CSI Criteria

PP Deflection in	loc	L/defl	L/#
VERT(LL): 0.109	P	999	240
VERT(CL): 0.210	P	999	180
HORZ(LL): 0.026	D	-	-
HORZ(TL): 0.050	D	-	-

Creep Factor: 2.0
Max TC CSI: 0.511
Max BC CSI: 0.405
Max Web CSI: 0.906

VIEW Ver: 21.01.01A.0521.20

▲ Maximum Reactions (lbs)

	Gravity			Non-Gravity		
Loc	R+	/ R-	/ Rh	/ Rw	/ U	/ RL
B	2825	/-	/-	/21	/-	/-
M	4093	/-	/0	/70	/-	/-
K	-	/-390	/-	/-	/42	/-

Wind reactions based on MWFRS
B Brg Width = 4.0 Min Req = 1.5
M Brg Width = 4.0 Min Req = 1.5
K Brg Width = 4.0 Min Req = 1.5
Bearings B, M, & K are a rigid surface.
Members not listed have forces less than 375#

Maximum Top Chord Forces Per Ply (lbs)

Chords	Tens.	Comp.	Chords	Tens.	Comp.
B - C	0	-2146	G - H	0	-2203
C - D	0	-2057	H - I	0	-2230
D - E	0	-1881	I - J	0	-1617
E - F	0	-1754	J - K	839	0
F - G	0	-1754			

Maximum Bot Chord Forces Per Ply (lbs)

Chords	Tens.	Comp.	Chords	Tens.	Comp.
B - S	1730	0	P - O	1825	0
S - R	1650	0	O - N	1594	0
R - Q	1522	0	N - M	0	-1375
Q - P	1793	0	M - K	0	-780

Maximum Web Forces Per Ply (lbs)

Webs	Tens.	Comp.	Webs	Tens.	Comp.
E - Q	646	0	N - J	2380	0
G - P	1151	0	J - M	0	-1838
I - N	0	-1028			

Lumber

Top chord: 2x4 SP #2;
Bot chord: 2x6 SP 2400f-2.0E;
Webs: 2x4 SP #3;

Nailnote

Nail Schedule:0.128"x3", min. nails
Top Chord: 1 Row @12.00" o.c.
Bot Chord: 1 Row @12.00" o.c.
Webs : 1 Row @ 4" o.c.
Use equal spacing between rows and stagger nails in each row to avoid splitting.

Special Loads

——(Lumber Dur.Fac.=1.25 / Plate Dur.Fac.=1.25)

TC: From	64 plf at	-1.00 to	64 plf at	15.04
TC: From	61 plf at	15.04 to	61 plf at	22.96
TC: From	64 plf at	22.96 to	64 plf at	33.00
TC: From	61 plf at	33.00 to	61 plf at	45.00
BC: From	5 plf at	-1.00 to	5 plf at	0.00
BC: From	20 plf at	0.00 to	20 plf at	44.00
BC: From	4 plf at	44.00 to	4 plf at	45.00
PLB: From	40 plf at	9.02 to	40 plf at	12.17
PLB: From	40 plf at	15.33 to	40 plf at	17.46
PLB: From	40 plf at	20.54 to	40 plf at	22.67
PLB: From	40 plf at	25.72 to	40 plf at	27.83

BC: 2534 lb Conc. Load at 22.02

Loading

Truss passed check for 20 psf additional bottom chord live load in areas with 42"-high x 24"-wide clearance.

Wind

Wind loads and reactions based on MWFRS.

Wind loading based on both gable and hip roof types.

Additional Notes

Negative reaction(s) of -390# MAX. from a non-wind load case requires uplift connection. See Maximum Reactions.

It is the responsibility of the Building Designer and Truss Fabricator to review this drawing prior to cutting lumber to verify that all data, including dimensions and loads, conform to the architectural plans/specifications and fabricate a truss layout.

YOONHWAK KIM LICENSE No. 86367 STATE OF FLORIDA PROFESSIONAL ENGINEER

FL REG# 278, Yoonhwak Kim, FL PE #86367
06/30/2021

****WARNING**** READ AND FOLLOW ALL NOTES ON THIS DRAWING!
****IMPORTANT**** FURNISH THIS DRAWING TO ALL CONTRACTORS INCLUDING THE INSTALLERS

Trusses require extreme care in fabricating, handling, shipping, installing and bracing. Refer to and follow the latest edition of BCSI (Building Component Safety Information, by TPI and SBCA) for safety practices prior to performing these functions. Installers shall provide temporary bracing per BCSI. Unless noted otherwise, top chord shall have properly attached structural sheathing and bottom chord shall have a properly attached rigid ceiling. Locations shown for permanent lateral restraint of webs shall have bracing installed per BCSI sections B3, B7, or B10, as applicable. Apply plates to each face of truss and position as shown above and on the Joint Details, unless noted otherwise. Refer to drawings 160A-Z for standard plate positions. Refer to job's General Notes page for additional information.

Alpine, a division of ITW Building Components Group Inc. shall not be responsible for any deviation from this drawing, any failure to build the truss in conformance with ANSI/TPI 1, or for handling, shipping, installation and bracing of trusses. A seal on this drawing or cover page listing this drawing, indicates acceptance of professional engineering responsibility solely for the design shown. The suitability and use of this drawing for any structure is the responsibility of the Building Designer per ANSI/TPI 1 Sec.2.

For more information see these web sites: Alpine: alpineitw.com; TPI: tpinst.org; SBCA: sbcindustry.com; ICC: iccsafe.org; AWC: awc.org

ALPINE AN ITW COMPANY
6750 Forum Drive
Suite 305
Orlando FL, 32821

SEQN: 626811 COMN FROM: CDM	Ply: 1 Qty: 6	**Job Number:** 21-5642 Slone- Pamlico Cabin **Truss Label:** D08	Cust: R 215 JRef:1X6O2150013 T22 DrwNo: 181.21.1021.03693 SSB / YK 06/30/2021

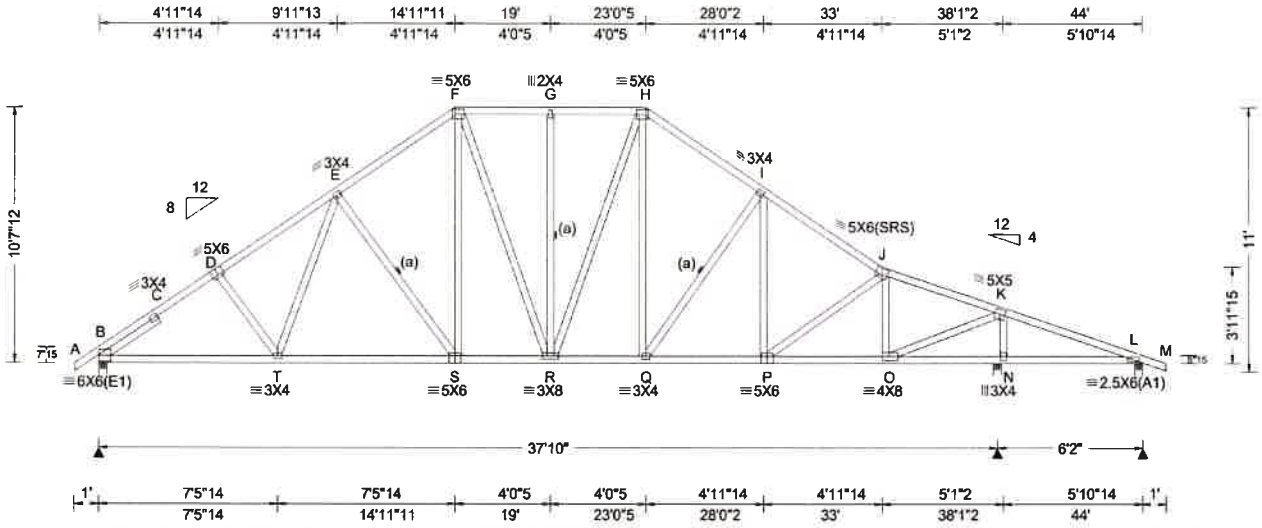

Loading Criteria (psf)

TCLL:	20.00
TCDL:	10.00
BCLL:	0.00
BCDL:	10.00
Des Ld:	40.00
NCBCLL:	10.00
Soffit:	2.00

Load Duration: 1.25
Spacing: 24.0 "

Wind Criteria
Wind Std: ASCE 7-16
Speed: 130 mph
Enclosure: Closed
Risk Category: II
EXP: B Kzt: NA
Mean Height: 15.00 ft
TCDL: 5.0 psf
BCDL: 5.0 psf
MWFRS Parallel Dist: 0 to h/2
C&C Dist a: 4.40 ft
Loc. from endwall: Any
GCpi: 0.18
Wind Duration: 1.60

Snow Criteria (Pg,Pf in PSF)
Pg: NA Ct: NA CAT: NA
Pf: NA Ce: NA
Lu: NA Cs: NA
Snow Duration: NA

Building Code:
FBC 7th Ed. 2020 Res.
TPI Std: 2014
Rep Fac: Yes
FT/RT:20(0)/10(0)
Plate Type(s):
WAVE

Defl/CSI Criteria

PP Deflection in	loc	L/defl	L/#
VERT(LL):	0.128 Q	999	240
VERT(CL):	0.237 G	999	180
HORZ(LL):	0.052 O	-	-
HORZ(TL):	0.099 O	-	-

Creep Factor: 2.0
Max TC CSI: 0.631
Max BC CSI: 0.892
Max Web CSI: 0.865

VIEW Ver: 21.01.01A.0521.20

▲ Maximum Reactions (lbs)

	Gravity			Non-Gravity		
Loc	R+	/ R-	/ Rh	/ Rw	/ U	/ RL
B	1841	/-	/-	/960	/-	/224
N	2158	/-	/-	/1120	/-	/-
L	256	/-	/-	/149	/28	/-

Wind reactions based on MWFRS
B Brg Width = 4.0 Min Req = 2.2
N Brg Width = 4.0 Min Req = 2.2
L Brg Width = 4.0 Min Req = 1.5
Bearings B, N, & L are a rigid surface.
Members not listed have forces less than 375#

Maximum Top Chord Forces Per Ply (lbs)

Chords	Tens.	Comp.	Chords	Tens.	Comp.
B - C	157	-2745	G - H	106	-1667
C - D	73	-2657	H - I	120	-1996
D - E	104	-2561	I - J	115	-2302
E - F	109	-2045	J - K	124	-1928
F - G	106	-1667	K - L	472	0

Maximum Bot Chord Forces Per Ply (lbs)

Chords	Tens.	Comp.	Chords	Tens.	Comp.
B - T	2178	0	Q - P	1843	0
T - S	1929	0	P - O	1848	-6
S - R	1621	0	O - N	23	-650
R - Q	1581	0	N - L	19	-417

Maximum Web Forces Per Ply (lbs)

Webs	Tens.	Comp.	Webs	Tens.	Comp.
T - E	397	-29	Q - I	173	-458
E - S	157	-521	J - O	62	-937
F - S	671	-65	O - K	2271	-12
H - Q	552	-93	K - N	187	-1963

Lumber
Top chord: 2x4 SP #2;
Bot chord: 2x4 SP #2;
Webs: 2x4 SP #3;
Lt Slider: 2x4 SP #3; block length = 2.937'

Bracing
(a) Continuous lateral restraint equally spaced on member.

Loading
Truss passed check for 20 psf additional bottom chord live load in areas with 42"-high x 24"-wide clearance.

Wind
Wind loads based on MWFRS with additional C&C member design.
Wind loading based on both gable and hip roof types.

Additional Notes
Refer to DWG PB160160118 for piggyback details.

YOONHWAK KIM
LICENSE
No. 86367
STATE OF
FLORIDA
PROFESSIONAL ENGINEER

FL REG# 278, Yoonhwak Kim, FL PE #86367
06/30/2021

****WARNING**** READ AND FOLLOW ALL NOTES ON THIS DRAWING!
****IMPORTANT**** FURNISH THIS DRAWING TO ALL CONTRACTORS INCLUDING THE INSTALLERS

Trusses require extreme care in fabricating, handling, shipping, installing and bracing. Refer to and follow the latest edition of BCSI (Building Component Safety Information, by TPI and SBCA) for safety practices prior to performing these functions. Installers shall provide temporary bracing per BCSI. Unless noted otherwise, top chord shall have properly attached structural sheathing and bottom chord shall have a properly attached rigid ceiling. Locations shown for permanent lateral restraint of webs shall have bracing installed per BCSI sections B3, B7, or B10, as applicable. Apply plates to each face of truss and position as shown above and on the Joint Details, unless noted otherwise. Refer to drawings 160A-Z for standard plate positions. Refer to job's General Notes page for additional information.

Alpine, a division of ITW Building Components Group Inc. shall not be responsible for any deviation from this drawing, any failure to build the truss in conformance with ANSI/TPI 1, or for handling, shipping, installation and bracing of trusses. A seal on this drawing or cover page listing this drawing, indicates acceptance of professional engineering responsibility solely for the design shown. The suitability and use of this drawing for any structure is the responsibility of the Building Designer per ANSI/TPI 1 Sec.2.

For more information see these web sites: Alpine: alpineitw.com; TPI: tpinst.org; SBCA: sbcindustry.com; ICC: iccsafe.org; AWC: awc.org

ALPINE
AN ITW COMPANY
6750 Forum Drive
Suite 305
Orlando FL, 32821

SEQN: 626880 GABL FROM: CDM	Ply: 1 Qty: 1	**Job Number:** 21-5642 Sione- Pamlico Cabin **Truss Label:** D09	Cust: R 215 JRef:1X6O2150013 T9 DrwNo: 181.21.1021.05840 SSB / YK 06/30/2021

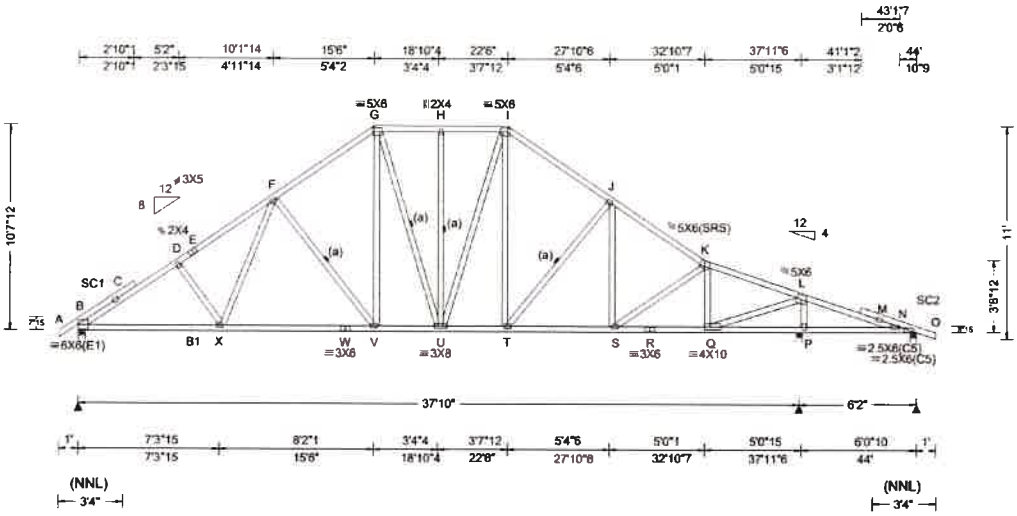

Loading Criteria (psf)		**Wind Criteria**	**Snow Criteria** (Pg,Pf in PSF)	**Defl/CSI Criteria**	
TCLL:	20.00	Wind Std: ASE 7-16	Pg: NA Ct: NA CAT: NA	PP Deflection in loc L/defl L/#	
TCDL:	10.00	Speed: 130 mph	Pf: NA Ce: NA	VERT(LL): 0.126 V 999 240	
BCLL:	0.00	Enclosure: Closed	Lu: NA Cs: NA	VERT(CL): 0.246 V 999 180	
BCDL:	10.00	Risk Category: II	Snow Duration: NA	HORZ(LL): 0.060 C - -	
Des Ld:	40.00	EXP: B Kzt: NA		HORZ(TL): 0.116 C - -	
NCBCLL:	10.00	Mean Height: 15.00 ft	Building Code:	Creep Factor: 2.0	
Soffit:	2.00	TCDL: 5.0 psf	FBC 7th Ed. 2020 Res.	Max TC CSI: 0.863	
Load Duration: 1.25		BCDL: 5.0 psf	TPI Std: 2014	Max BC CSI: 0.767	
Spacing: 24.0 "		MWFRS Parallel Dist: 0 to h/2	Rep Fac: Yes	Max Web CSI: 0.937	
		C&C Dist a: 4.40 ft	FT/RT:20(0)/10(0)		
		Loc. from endwall: Any	Plate Type(s):		
		GCpi: 0.18	WAVE	VIEW Ver: 21.01.01A.0521.20	
		Wind Duration: 1.60			

▲ Maximum Reactions (lbs)

Loc	Gravity R+	Gravity / R-	Gravity / Rh	Non-Gravity / Rw	Non-Gravity / U	Non-Gravity / RL
B	1753	/-	/-	/862	/-	/159
P	2169	/-	/-	/1132	/-	/-
N	168	/-26	/-	/80	/25	/-

Wind reactions based on MWFRS
B Brg Width = 4.0 Min Req = 1.5
P Brg Width = 4.0 Min Req = 2.2
N Brg Width = 4.0 Min Req = 1.5
Bearings B, P, & N are a rigid surface.
Members not listed have forces less than 375#

Maximum Top Chord Forces Per Ply (lbs)

Chords	Tens.	Comp.	Chords	Tens.	Comp.
B - C	0	-2787	H - I	0	-1516
C - D	0	-2723	I - J	6	-1866
D - E	0	-2614	J - K	18	-2241
E - F	0	-2585	K - L	71	-1937
F - G	0	-1914	L - M	807	0
G - H	0	-1516	M - N	790	-21

Maximum Bot Chord Forces Per Ply (lbs)

Chords	Tens.	Comp.	Chords	Tens.	Comp.
B - X	2288	0	T - S	1792	0
X - W	1883	0	S - R	1863	0
W - V	1883	0	R - Q	1863	0
V - U	1508	0	Q - P	0	-1187
U - T	1466	0	P - N	0	-709

Maximum Web Forces Per Ply (lbs)

Webs	Tens.	Comp.	Webs	Tens.	Comp.
X - F	566	0	T - J	186	-517
F - V	0	-595	K - Q	18	-868
G - V	677	0	Q - L	2459	0
I - T	529	-93	L - P	8	-2005

Lumber

Top chord: 2x4 SP #2;
Bot chord: 2x4 SP #2; B1 2x4 SP M-31;
Webs: 2x4 SP #3;
Stack Chord: SC1 2x4 SP #2;
Stack Chord: SC2 2x4 SP #2;

Bracing

(a) Continuous lateral restraint equally spaced on member.

Plating Notes

All plates are 3X4 except as noted.

Loading

Truss passed check for 20 psf additional bottom chord live load in areas with 42"-high x 24"-wide clearance.

Wind

Wind loads based on MWFRS with additional C&C member design.

Wind loading based on both gable and hip roof types.

Additional Notes

Stacked top chord must NOT be notched or cut in area (NNL). Dropped top chord braced at 24" oc intervals. Attach stacked top chord (SC) to dropped top chord in notchable area using 3x4 tie-plates 24" oc. Center plate on stacked/dropped chord interface, plate length perpendicular to chord length. Splice top chord in notchable area using 3x6.

Refer to DWG PB160160118 for piggyback details.

YOONHWAK KIM
LICENSE
No. 86367
STATE OF
FLORIDA
PROFESSIONAL ENGINEER

FL REG# 278, Yoonhwak Kim, FL PE #86367
06/30/2021

****WARNING**** READ AND FOLLOW ALL NOTES ON THIS DRAWING!
****IMPORTANT**** FURNISH THIS DRAWING TO ALL CONTRACTORS INCLUDING THE INSTALLERS

Trusses require extreme care in fabricating, handling, shipping, installing and bracing. Refer to and follow the latest edition of BCSI (Building Component Safety Information, by TPI and SBCA) for safety practices prior to performing these functions. Installers shall provide temporary bracing per BCSI. Unless noted otherwise, top chord shall have properly attached structural sheathing and bottom chord shall have a properly attached rigid ceiling. Locations shown for permanent lateral restraint of webs shall have bracing installed per BCSI sections B3, B7, or B10, as applicable. Apply plates to each face of truss and position as shown above and on the Joint Details, unless noted otherwise. Refer to drawings 160A-Z for standard plate positions. Refer to job's General Notes page for additional information.

Alpine, a division of ITW Building Components Group Inc. shall not be responsible for any deviation from this drawing, any failure to build the truss in conformance with ANSI/TPI 1, or for handling, shipping, installation and bracing of trusses. A seal on this drawing or cover page listing this drawing, indicates acceptance of professional engineering responsibility solely for the design shown. The suitability and use of this drawing for any structure is the responsibility of the Building Designer per ANSI/TPI 1 Sec.2.

For more information see these web sites: Alpine: alpineitw.com; TPI: tpinst.org; SBCA: sbcindustry.com; ICC: iccsafe.org; AWC: awc.org

ALPINE
AN ITW COMPANY
6750 Forum Drive
Suite 305
Orlando FL, 32821

SEQN: 626898 COMN FROM: CDM	Ply: 1 Qty: 3	**Job Number:** 21-5642 Slone- Pamlico Cabin **Truss Label:** E01	Cust: R 215 JRef: 1X6O2150013 T24 DrwNo: 181.21.1021.08127 SSB / YK 06/30/2021

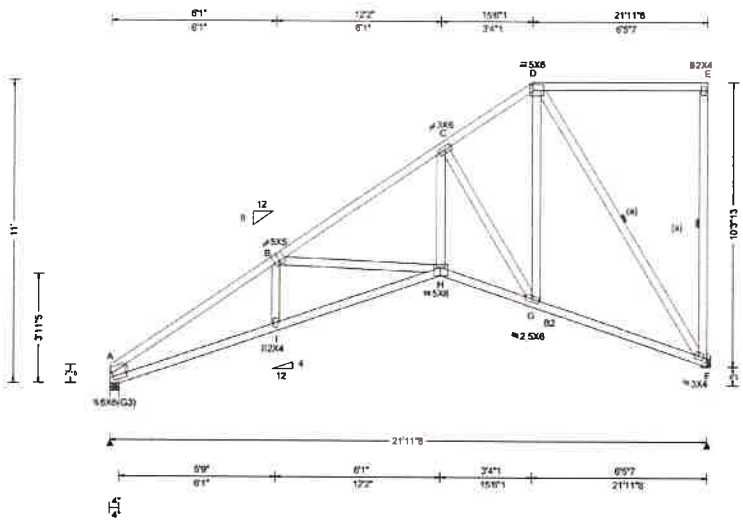

Loading Criteria (psf)	**Wind Criteria**	**Snow Criteria** (Pg,Pf in PSF)	**Defl/CSI Criteria**
TCLL: 20.00	Wind Std: ASCE 7-16	Pg: NA Ct: NA CAT: NA	PP Deflection in loc L/defl L/#
TCDL: 10.00	Speed: 130 mph	Pf: NA Ce: NA	VERT(LL): 0.099 I 999 240
BCLL: 0.00	Enclosure: Closed	Lu: NA Cs: NA	VERT(CL): 0.211 I 999 180
BCDL: 10.00	Risk Category: II	Snow Duration: NA	HORZ(LL): 0.082 F - -
Des Ld: 40.00	EXP: B Kzt: NA		HORZ(TL): 0.174 F - -
NCBCLL: 10.00	Mean Height: 15.09 ft	Building Code:	Creep Factor: 2.0
Soffit: 2.00	TCDL: 5.0 psf	FBC 7th Ed. 2020 Res.	Max TC CSI: 0.826
Load Duration: 1.25	BCDL: 5.0 psf	TPI Std: 2014	Max BC CSI: 0.523
Spacing: 24.0 "	MWFRS Parallel Dist: h to 2h	Rep Fac: Yes	Max Web CSI: 0.996
	C&C Dist a: 3.00 ft	FT/RT:20(0)/10(0)	
	Loc. from endwall: not in 9.00 ft	Plate Type(s):	
	GCpi: 0.18	WAVE	VIEW Ver: 21.01.01A.0521.20
	Wind Duration: 1.60		

▲ Maximum Reactions (lbs)

Loc	Gravity R+	Gravity / R-	Gravity / Rh	Non-Gravity / Rw	Non-Gravity / U	Non-Gravity / RL
A	935	/-	/-	/565	/-	/180
F	935	/-	/-	/580	/-	/-

Wind reactions based on MWFRS
A Brg Width = 4.0 Min Req = 1.5
F Brg Width = - Min Req = -
Bearing A is a rigid surface.
Members not listed have forces less than 375#

Maximum Top Chord Forces Per Ply (lbs)

Chords	Tens.	Comp.	Chords	Tens.	Comp.
A - B	42	-2182	C - D	9	-755
B - C	22	-1507			

Maximum Bot Chord Forces Per Ply (lbs)

Chords	Tens.	Comp.	Chords	Tens.	Comp.
A - I	1797	-250	H - G	1219	-116
I - H	1820	-252	G - F	606	-28

Maximum Web Forces Per Ply (lbs)

Webs	Tens.	Comp.	Webs	Tens.	Comp.
B - H	126	-541	G - D	964	-55
H - C	1089	-81	D - F	32	-1017
C - G	170	-1193			

Lumber

Top chord: 2x4 SP #2;
Bot chord: 2x4 SP M-31; B2 2x4 SP #2;
Webs: 2x4 SP #3;
Lt Stub Wedge: 2x4 SP #3;

Bracing

(a) Continuous lateral restraint equally spaced on member.

Hangers / Ties

(J) Hanger Support Required, by others

Wind

Wind loads based on MWFRS with additional C&C member design.

Right end vertical not exposed to wind pressure.

Wind loading based on both gable and hip roof types.

Additional Notes

Refer to DWG PB160160118 for piggyback details.

YOONHWAK KIM
LICENSE
No. 86367
STATE OF
FLORIDA
PROFESSIONAL ENGINEER

FL REG# 278, Yoonhwak Kim, FL PE #86367
06/30/2021

****WARNING**** READ AND FOLLOW ALL NOTES ON THIS DRAWING!
****IMPORTANT**** FURNISH THIS DRAWING TO ALL CONTRACTORS INCLUDING THE INSTALLERS

Trusses require extreme care in fabricating, handling, shipping, installing and bracing. Refer to and follow the latest edition of BCSI (Building Component Safety Information, by TPI and SBCA) for safety practices prior to performing these functions. Installers shall provide temporary bracing per BCSI. Unless noted otherwise, top chord shall have properly attached structural sheathing and bottom chord shall have a properly attached rigid ceiling. Locations shown for permanent lateral restraint of webs shall have bracing installed per BCSI sections B3, B7, or B10, as applicable. Apply plates to each face of truss and position as shown above and on the Joint Details, unless noted otherwise. Refer to drawings 160A-Z for standard plate positions. Refer to job's General Notes page for additional information.

Alpine, a division of ITW Building Components Group Inc. shall not be responsible for any deviation from this drawing, any failure to build the truss in conformance with ANSI/TPI 1, or for handling, shipping, installation and bracing of trusses. A seal on this drawing or cover page listing this drawing, indicates acceptance of professional engineering responsibility solely for the design shown. The suitability and use of this drawing for any structure is the responsibility of the Building Designer per ANSI/TPI 1 Sec.2.

For more information see these web sites: Alpine: alpineitw.com; TPI: tpinst.org; SBCA: sbcindustry.com; ICC: iccsafe.org; AWC: awc.org

ALPINE
AN ITW COMPANY
6750 Forum Drive
Suite 305
Orlando FL, 32821

SEQN: 626910 COMN FROM: CDM	Ply: 1 Qty: 1	**Job Number:** 21-5642 Slone- Pamlico Cabin **Truss Label:** E02	Cust: R 215 JRef: 1X6O2150013 T18 DrwNo: 181.21.1021.09827 SSB / YK 06/30/2021

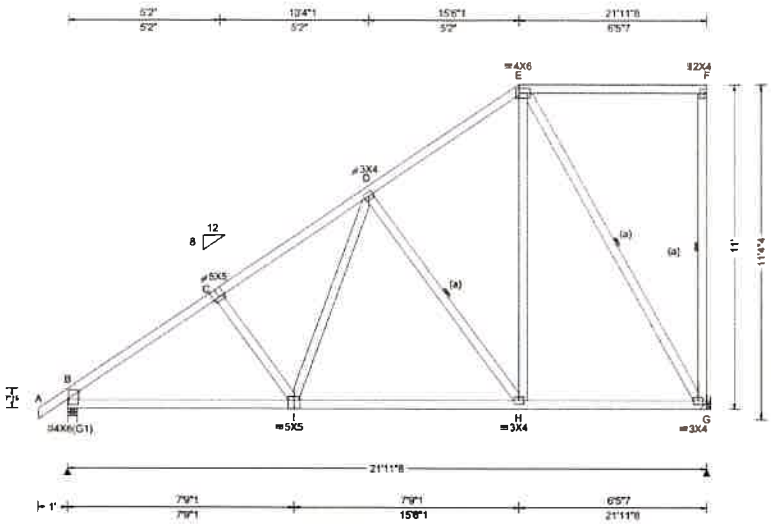

Loading Criteria (psf)	**Wind Criteria**	**Snow Criteria** (Pg,Pf in PSF)	**Defl/CSI Criteria**
TCLL: 20.00 TCDL: 10.00 BCLL: 0.00 BCDL: 10.00 Des Ld: 40.00 NCBCLL: 10.00 Soffit: 2.00 Load Duration: 1.25 Spacing: 24.0 "	Wind Std: ASCE 7-16 Speed: 130 mph Enclosure: Closed Risk Category: II EXP: B Kzt: NA Mean Height: 15.09 ft TCDL: 5.0 psf BCDL: 5.0 psf MWFRS Parallel Dist: h to 2h C&C Dist a: 3.00 ft Loc. from endwall: not in 9.00 ft GCpi: 0.18 Wind Duration: 1.60	Pg: NA Ct: NA CAT: NA Pf: NA Ce: NA Lu: NA Cs: NA Snow Duration: NA Building Code: FBC 7th Ed. 2020 Res. TPI Std: 2014 Rep Fac: Yes FT/RT:20(0)/10(0) Plate Type(s): WAVE	PP Deflection in loc L/defl L/# VERT(LL): 0.042 I 999 240 VERT(CL): 0.077 I 999 180 HORZ(LL): 0.017 C - - HORZ(TL): 0.032 C - - Creep Factor: 2.0 Max TC CSI: 0.825 Max BC CSI: 0.709 Max Web CSI: 0.741 VIEW Ver: 21.01.01A.0521.20

▲ Maximum Reactions (lbs)

	Gravity			Non-Gravity		
Loc	R+	/ R-	/ Rh	/ Rw	/ U	/ RL
B	1022	/-	/-	/561	/-	/180
G	1112	/-	/-	/567	/-	/-

Wind reactions based on MWFRS
B Brg Width = 4.0 Min Req = 1.5
G Brg Width = - Min Req = -
Bearing B is a rigid surface.
Members not listed have forces less than 375#

Maximum Top Chord Forces Per Ply (lbs)

Chords	Tens.	Comp.	Chords	Tens.	Comp.
B - C	0	-1477	D - E	0	-714
C - D	0	-1286			

Maximum Bot Chord Forces Per Ply (lbs)

Chords	Tens.	Comp.	Chords	Tens.	Comp.
B - I	1144	-146	H - G	500	-13
I - H	848	-84			

Maximum Web Forces Per Ply (lbs)

Webs	Tens.	Comp.	Webs	Tens.	Comp.
I - D	455	-5	E - H	822	-18
D - H	121	-590	E - G	25	-968

Lumber

Top chord: 2x4 SP #2;
Bot chord: 2x4 SP #2;
Webs: 2x4 SP #3;
Lt Stub Wedge: 2x4 SP #3;

Bracing

(a) Continuous lateral restraint equally spaced on member.

Hangers / Ties

(J) Hanger Support Required, by others

Loading

Truss passed check for 20 psf additional bottom chord live load in areas with 42"-high x 24"-wide clearance.

Wind

Wind loads based on MWFRS with additional C&C member design.

Right end vertical not exposed to wind pressure.

Wind loading based on both gable and hip roof types.

Additional Notes

Refer to DWG PB160160118 for piggyback details.

YOONHWAK KIM
LICENSE
No. 86367
STATE OF
FLORIDA
PROFESSIONAL ENGINEER

FL REG# 278, Yoonhwak Kim, FL PE #86367
06/30/2021

****WARNING**** READ AND FOLLOW ALL NOTES ON THIS DRAWING!
****IMPORTANT**** FURNISH THIS DRAWING TO ALL CONTRACTORS INCLUDING THE INSTALLERS

Trusses require extreme care in fabricating, handling, shipping, installing and bracing. Refer to and follow the latest edition of BCSI (Building Component Safety Information, by TPI and SBCA) for safety practices prior to performing these functions. Installers shall provide temporary bracing per BCSI. Unless noted otherwise, top chord shall have properly attached structural sheathing and bottom chord shall have a properly attached rigid ceiling. Locations shown for permanent lateral restraint of webs shall have bracing installed per BCSI sections B3, B7, or B10, as applicable. Apply plates to each face of truss and position as shown above and on the Joint Details, unless noted otherwise. Refer to drawings 160A-Z for standard plate positions. Refer to job's General Notes page for additional information.

Alpine, a division of ITW Building Components Group Inc. shall not be responsible for any deviation from this drawing, any failure to build the truss in conformance with ANSI/TPI 1, or for handling, shipping, installation and bracing of trusses. A seal on this drawing or cover page listing this drawing, indicates acceptance of professional engineering responsibility solely for the design shown. The suitability and use of this drawing for any structure is the responsibility of the Building Designer per ANSI/TPI 1 Sec.2.

For more information see these web sites: Alpine: alpineitw.com; TPI: tpinst.org; SBCA: sbcindustry.com; ICC: iccsafe.org; AWC: awc.org

ALPINE
AN ITW COMPANY
6750 Forum Drive
Suite 305
Orlando FL, 32821

SEQN: 626919 MONO FROM: CDM	Ply: 1 Qty: 1	**Job Number:** 21-5642 Slone- Pamlico Cabin **Truss Label:** G01	Cust: R 215 JRef: 1X6O2150013 T12 DrwNo: 181.21.1021.42837 SSB / YK 06/30/2021

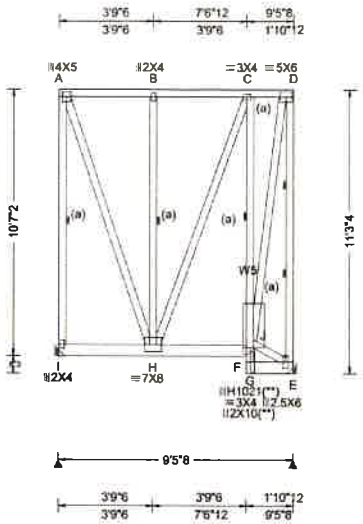

Loading Criteria (psf)	**Wind Criteria**	**Snow Criteria** (Pg,Pf in PSF)	**Defl/CSI Criteria**
TCLL: 20.00 TCDL: 10.00 BCLL: 0.00 BCDL: 10.00 Des Ld: 40.00 NCBCLL: 10.00 Soffit: 2.00 Load Duration: 1.25 Spacing: 24.0 "	Wind Std: ASCE 7-16 Speed: 130 mph Enclosure: Closed Risk Category: II EXP: B Kzt: NA Mean Height: 19.37 ft TCDL: 5.0 psf BCDL: 5.0 psf MWFRS Parallel Dist: 0 to h/2 C&C Dist a: 3.00 ft Loc. from endwall: not in 12.50 ft GCpi: 0.18 Wind Duration: 1.60	Pg: NA Ct: NA CAT: NA Pf: NA Ce: NA Lu: NA Cs: NA Snow Duration: NA Building Code: FBC 7th Ed. 2020 Res. TPI Std: 2014 Rep Fac: Varies by Ld Case FT/RT:20(0)/10(0) Plate Type(s): WAVE, HS	PP Deflection in loc L/defl L/# VERT(LL): 0.044 B 999 240 VERT(CL): 0.086 B 999 180 HORZ(LL): 0.021 A - - HORZ(TL): 0.041 A - - Creep Factor: 2.0 Max TC CSI: 0.188 Max BC CSI: 0.393 Max Web CSI: 0.973 VIEW Ver: 21.01.01A.0521.20

▲Maximum Reactions (lbs)

	Gravity			Non-Gravity		
Loc	R+	/ R-	/ Rh	/ Rw	/ U	/ RL
I	2088	/-	/-	/158	/-	/-
E	2534	/-	/-	/189	/-	/-

Wind reactions based on MWFRS
I Brg Width = - Min Req = -
E Brg Width = - Min Req = -
Members not listed have forces less than 375#

Maximum Top Chord Forces Per Ply (lbs)

Chords	Tens.	Comp.	Chords	Tens.	Comp.
A - B	0	-616	B - C	0	-616

Maximum Bot Chord Forces Per Ply (lbs)

Chords	Tens.	Comp.
H - F	383	0

Maximum Web Forces Per Ply (lbs)

Webs	Tens.	Comp.	Webs	Tens.	Comp.
A - I	0	-1755	F - G	845	0
A - H	1775	0	J - F	1406	0
H - C	671	0	J - D	2078	0
C - J	0	-761	D - E	0	-2104

Lumber

Top chord: 2x4 SP #2;
Bot chord: 2x6 SP 2400f-2.0E;
Webs: 2x4 SP #3; W5 2x4 SP #2;

Bracing

(a) Continuous lateral restraint equally spaced on member.

Special Loads

——(Lumber Dur.Fac.=1.25 / Plate Dur.Fac.=1.25)

TC: From	60 plf at	0.00 to	60 plf at	2.17
TC: From	30 plf at	2.17 to	30 plf at	6.17
TC: From	60 plf at	6.17 to	60 plf at	9.46
BC: From	20 plf at	0.00 to	20 plf at	2.17
BC: From	10 plf at	2.17 to	10 plf at	7.56
BC: From	20 plf at	7.56 to	20 plf at	9.46
PLB: From	40 plf at	0.29 to	40 plf at	2.29
PLB: From	20 plf at	5.38 to	20 plf at	7.56

BC: 935 lb Conc. Load at 2.17, 4.17, 6.17
BC: 1112 lb Conc. Load at 8.17

Plating Notes

(**) 2 plate(s) require special positioning. Refer to scaled plate plot details for special positioning requirements.

Loading

Truss passed check for 20 psf additional bottom chord live load in areas with 42"-high x 24"-wide clearance.

Additional Notes

Truss must be installed as shown with top chord up.

Wind

Wind loads and reactions based on MWFRS.

End verticals not exposed to wind pressure.

It is the responsibility of the Building Designer and Truss Fabricator to review this drawing prior to cutting lumber to verify that all data,including dimensions and loads, conform to the architectural plans/specifications and fabricators truss layout.

YOONHWAK KIM
LICENSE
No. 86367
STATE OF
FLORIDA
PROFESSIONAL ENGINEER

FL REG# 278, Yoonhwak Kim, FL PE #86367
06/30/2021

****WARNING**** READ AND FOLLOW ALL NOTES ON THIS DRAWING!
****IMPORTANT**** FURNISH THIS DRAWING TO ALL CONTRACTORS INCLUDING THE INSTALLERS

Trusses require extreme care in fabricating, handling, shipping, installing and bracing. Refer to and follow the latest edition of BCSI (Building Component Safety Information, by TPI and SBCA) for safety practices prior to performing these functions. Installers shall provide temporary bracing per BCSI. Unless noted otherwise, top chord shall have properly attached structural sheathing and bottom chord shall have a properly attached rigid ceiling. Locations shown for permanent lateral restraint of webs shall have bracing installed per BCSI sections B3, B7, or B10, as applicable. Apply plates to each face of truss and position as shown above and on the Joint Details, unless noted otherwise. Refer to drawings 160A-Z for standard plate positions. Refer to job's General Notes page for additional information.

Alpine, a division of ITW Building Components Group Inc. shall not be responsible for any deviation from this drawing, any failure to build the truss in conformance with ANSI/TPI 1, or for handling, shipping, installation and bracing of trusses. A seal on this drawing or cover page listing this drawing, indicates acceptance of professional engineering responsibility solely for the design shown. The suitability and use of this drawing for any structure is the responsibility of the Building Designer per ANSI/TPI 1 Sec.2.

For more information see these web sites: Alpine: alpineitw.com; TPI: tpinst.org; SBCA: sbcindustry.com; ICC: iccsafe.org; AWC: awc.org

ALPINE
AN ITW COMPANY
6750 Forum Drive
Suite 305
Orlando FL, 32821

SEQN: 626768 MONO FROM: CDM	Ply: 1 Qty: 1	**Job Number:** 21-5642 Slone- Pamlico Cabin **Truss Label:** J01	Cust: R 215 JRef: 1X6O2150013 T14 DrwNo: 181.21.1021.15403 SSB / YK 06/30/2021

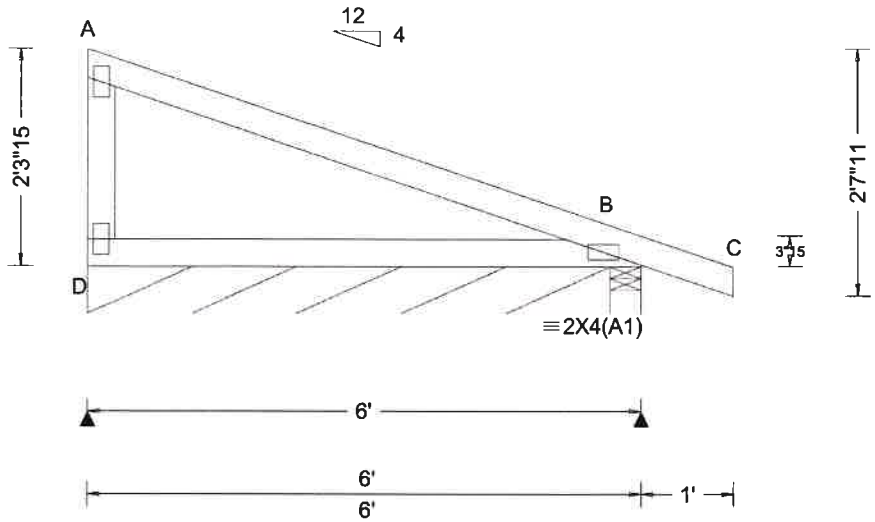

Loading Criteria (psf)	**Wind Criteria**	**Snow Criteria** (Pg,Pf in PSF)	**Defl/CSI Criteria**
TCLL: 20.00 TCDL: 10.00 BCLL: 0.00 BCDL: 10.00 Des Ld: 40.00 NCBCLL: 10.00 Soffit: 2.00 Load Duration: 1.25 Spacing: 24.0 "	Wind Std: ASCE 7-16 Speed: 130 mph Enclosure: Closed Risk Category: II EXP: B Kzt: NA Mean Height: 15.00 ft TCDL: 5.0 psf BCDL: 5.0 psf MWFRS Parallel Dist: > 2h C&C Dist a: 3.00 ft Loc. from endwall: not in 9.00 ft GCpi: 0.18 Wind Duration: 1.60	Pg: NA Ct: NA CAT: NA Pf: NA Ce: NA Lu: NA Cs: NA Snow Duration: NA Building Code: FBC 7th Ed. 2020 Res. TPI Std: 2014 Rep Fac: Yes FT/RT:20(0)/10(0) Plate Type(s): WAVE	PP Deflection in loc L/defl L/# VERT(LL): 0.022 D 999 240 VERT(CL): 0.044 D 999 180 HORZ(LL): -0.009 D - - HORZ(TL): 0.018 D - - Creep Factor: 2.0 Max TC CSI: 0.445 Max BC CSI: 0.325 Max Web CSI: 0.142 VIEW Ver: 21.01.01A.0521.20

▲ Maximum Reactions (lbs), or *=PLF

	Gravity			Non-Gravity		
Loc	R+	/ R-	/ Rh	/ Rw	/ U	/ RL
D*	41	/-	/-	/25	/-	/7
B	322	/-	/-	/177	/-	/-

Wind reactions based on MWFRS
D Brg Width = 68.0 Min Req = -
B Brg Width = 4.0 Min Req = 1.5
Bearings D & B are a rigid surface.
Members not listed have forces less than 375#

Lumber

Top chord: 2x4 SP #2;
Bot chord: 2x4 SP #2;
Webs: 2x4 SP #3;

Plating Notes

All plates are 2X4 except as noted.

Wind

Wind loads based on MWFRS with additional C&C member design.

Left end vertical not exposed to wind pressure.

Wind loading based on both gable and hip roof types.

YOONHWAK KIM
LICENSE
No. 86367
STATE OF
FLORIDA
PROFESSIONAL ENGINEER

FL REG# 278, Yoonhwak Kim, FL PE #86367
06/30/2021

****WARNING**** READ AND FOLLOW ALL NOTES ON THIS DRAWING!
****IMPORTANT**** FURNISH THIS DRAWING TO ALL CONTRACTORS INCLUDING THE INSTALLERS

Trusses require extreme care in fabricating, handling, shipping, installing and bracing. Refer to and follow the latest edition of BCSI (Building Component Safety Information, by TPI and SBCA) for safety practices prior to performing these functions. Installers shall provide temporary bracing per BCSI. Unless noted otherwise, top chord shall have properly attached structural sheathing and bottom chord shall have a properly attached rigid ceiling. Locations shown for permanent lateral restraint of webs shall have bracing installed per BCSI sections B3, B7, or B10, as applicable. Apply plates to each face of truss and position as shown above and on the Joint Details, unless noted otherwise. Refer to drawings 160A-Z for standard plate positions. Refer to job's General Notes page for additional information.

Alpine, a division of ITW Building Components Group Inc. shall not be responsible for any deviation from this drawing, any failure to build the truss in conformance with ANSI/TPI 1, or for handling, shipping, installation and bracing of trusses. A seal on this drawing or cover page listing this drawing, indicates acceptance of professional engineering responsibility solely for the design shown. The suitability and use of this drawing for any structure is the responsibility of the Building Designer per ANSI/TPI 1 Sec.2.

For more information see these web sites: Alpine: alpineitw.com; TPI: tpinst.org; SBCA: sbcindustry.com; ICC: iccsafe.org; AWC: awc.org

ALPINE
AN ITW COMPANY
6750 Forum Drive
Suite 305
Orlando FL, 32821

SEQN: 626829 GABL FROM: CDM	Ply: 1 Qty: 2	**Job Number:** 21-5642 Slone- Pamlico Cabin **Truss Label:** PB01	Cust: R 215 JRef:1X6O2150013 T25 DrwNo: 181.21.1021.17177 SSB / YK 06/30/2021

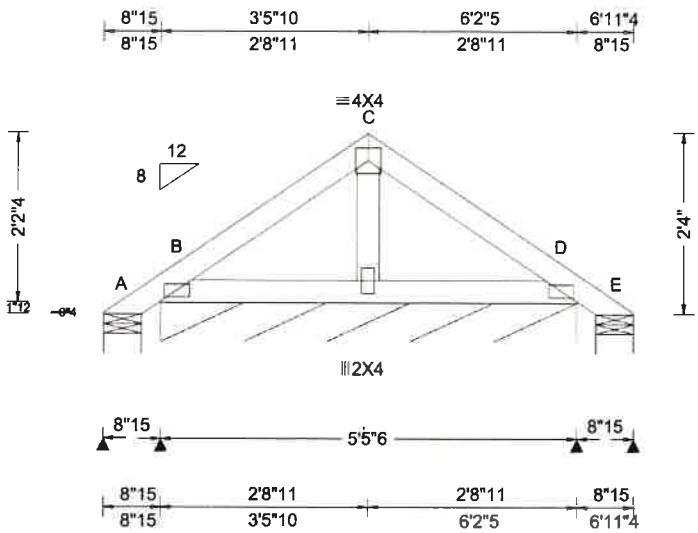

Loading Criteria (psf)	**Wind Criteria**	**Snow Criteria** (Pg,Pf in PSF)	**Defl/CSI Criteria**
TCLL: 20.00 TCDL: 10.00 BCLL: 0.00 BCDL: 10.00 Des Ld: 40.00 NCBCLL: 10.00 Soffit: 2.00 Load Duration: 1.25 Spacing: 24.0 "	Wind Std: ASCE 7-16 Speed: 130 mph Enclosure: Closed Risk Category: II EXP: B Kzt: NA Mean Height: 15.00 ft TCDL: 5.0 psf BCDL: 5.0 psf MWFRS Parallel Dist: 0 to h/2 C&C Dist a: 3.00 ft Loc. from endwall: Any GCpi: 0.18 Wind Duration: 1.60	Pg: NA Ct: NA CAT: NA Pf: NA Ce: NA Lu: NA Cs: NA Snow Duration: NA Building Code: FBC 7th Ed. 2020 Res. TPI Std: 2014 Rep Fac: Yes FT/RT:20(0)/10(0) Plate Type(s): WAVE	PP Deflection in loc L/defl L/# VERT(LL): 0.000 F 999 240 VERT(CL): 0.001 F 999 180 HORZ(LL): 0.000 F - - HORZ(TL): 0.001 F - - Creep Factor: 2.0 Max TC CSI: 0.074 Max BC CSI: 0.033 Max Web CSI: 0.015 VIEW Ver: 21.01.01A.0521.20

▲ Maximum Reactions (lbs), or *=PLF

	Gravity			Non-Gravity		
Loc	R+	/ R-	/ Rh	/ Rw	/ U	/ RL
A	-	/-17	/-	/32	/36	/44
B*	87	/-	/-	/61	/13	/-
E	-	/-17	/-	/9	/12	/-

Wind reactions based on MWFRS
A Brg Width = 5.9 Min Req = 1.5
B Brg Width = 65.4 Min Req = -
E Brg Width = 5.9 Min Req = 1.5
Bearings A, B, & E are a rigid surface.
Members not listed have forces less than 375#

Lumber

Top chord: 2x4 SP #2;
Bot chord: 2x4 SP #2;
Webs: 2x4 SP #3;

Plating Notes

All plates are 2X4(A1) except as noted.

Loading

Gable end supports 8" max rake overhang. Top chord must not be cut or notched.

Wind

Wind loads based on MWFRS with additional C&C member design.

Wind loading based on both gable and hip roof types.

Additional Notes

See DWGS A14015ENC160118 & GBLLETIN0118 for gable wind bracing and other requirements.

Refer to DWG PB160160118 for piggyback details.

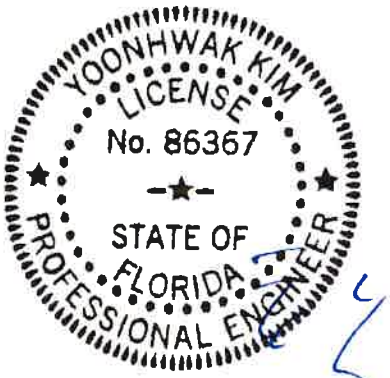

FL REG# 278, Yoonhwak Kim, FL PE #86367
06/30/2021

****WARNING**** READ AND FOLLOW ALL NOTES ON THIS DRAWING!
****IMPORTANT**** FURNISH THIS DRAWING TO ALL CONTRACTORS INCLUDING THE INSTALLERS

Trusses require extreme care in fabricating, handling, shipping, installing and bracing. Refer to and follow the latest edition of BCSI (Building Component Safety Information, by TPI and SBCA) for safety practices prior to performing these functions. Installers shall provide temporary bracing per BCSI. Unless noted otherwise, top chord shall have properly attached structural sheathing and bottom chord shall have a properly attached rigid ceiling. Locations shown for permanent lateral restraint of webs shall have bracing installed per BCSI sections B3, B7, or B10, as applicable. Apply plates to each face of truss and position as shown above and on the Joint Details, unless noted otherwise. Refer to drawings 160A-Z for standard plate positions. Refer to job's General Notes page for additional information.

Alpine, a division of ITW Building Components Group Inc. shall not be responsible for any deviation from this drawing, any failure to build the truss in conformance with ANSI/TPI 1, or for handling, shipping, installation and bracing of trusses. A seal on this drawing or cover page listing this drawing, indicates acceptance of professional engineering responsibility solely for the design shown. The suitability and use of this drawing for any structure is the responsibility of the Building Designer per ANSI/TPI 1 Sec.2.

For more information see these web sites: Alpine: alpineitw.com; TPI: tpinst.org; SBCA: sbcindustry.com; ICC: iccsafe.org; AWC: awc.org

ALPINE
AN ITW COMPANY
6750 Forum Drive
Suite 305
Orlando FL, 32821

SEQN: 626835 GABL FROM: CDM	Ply: 1 Qty: 19	**Job Number:** 21-5642 Slone- Pamlico Cabin **Truss Label:** PB02	Cust: R 215 JRef: 1X6O2150013 T2 DrwNo: 181.21.1021.18327 SSB / YK 06/30/2021

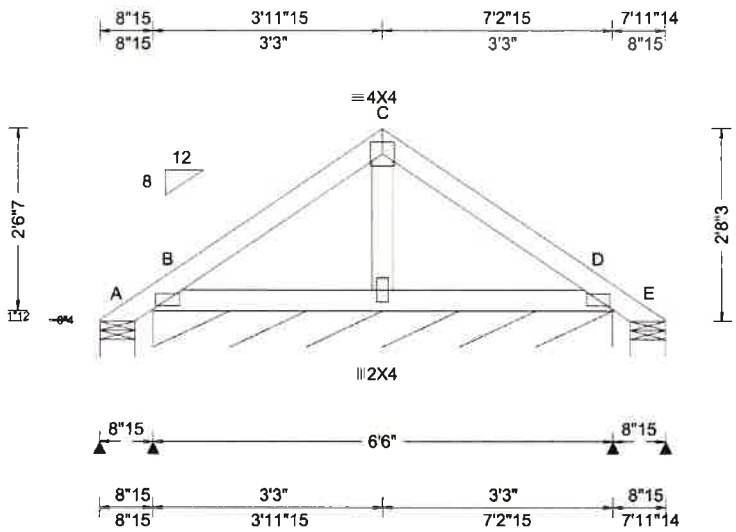

Loading Criteria (psf)

TCLL:	20.00
TCDL:	10.00
BCLL:	0.00
BCDL:	10.00
Des Ld:	40.00
NCBCLL:	10.00
Soffit:	2.00

Load Duration: 1.25
Spacing: 24.0 "

Wind Criteria
Wind Std: ASCE 7-16
Speed: 130 mph
Enclosure: Closed
Risk Category: II
EXP: B Kzt: NA
Mean Height: 15.00 ft
TCDL: 5.0 psf
BCDL: 5.0 psf
MWFRS Parallel Dist: 0 to h/2
C&C Dist a: 3.00 ft
Loc. from endwall: Any
GCpi: 0.18
Wind Duration: 1.60

Snow Criteria (Pg,Pf in PSF)
Pg: NA Ct: NA CAT: NA
Pf: NA Ce: NA
Lu: NA Cs: NA
Snow Duration: NA

Building Code:
FBC 7th Ed. 2020 Res.
TPI Std: 2014
Rep Fac: Yes
FT/RT:20(0)/10(0)
Plate Type(s):
WAVE

Defl/CSI Criteria

PP Deflection in	loc	L/defl	L/#
VERT(LL): 0.001	F	999	240
VERT(CL): 0.001	F	999	180
HORZ(LL): 0.001	F	-	-
HORZ(TL): 0.001	F	-	-

Creep Factor: 2.0
Max TC CSI: 0.110
Max BC CSI: 0.048
Max Web CSI: 0.018

VIEW Ver: 21.01.01A.0521.20

▲ Maximum Reactions (lbs), or *=PLF

	Gravity			Non-Gravity		
Loc	R+	/ R-	/ Rh	/ Rw	/ U	/ RL
A	-	/-39	/-	/41	/58	/51
B*	91	/-	/-	/63	/14	/-
E	-	/-39	/-	/16	/29	/-

Wind reactions based on MWFRS
A Brg Width = 5.9 Min Req = 1.5
B Brg Width = 78.0 Min Req = -
E Brg Width = 5.9 Min Req = 1.5
Bearings A, B, & E are a rigid surface.
Members not listed have forces less than 375#

Lumber

Top chord: 2x4 SP #2;
Bot chord: 2x4 SP #2;
Webs: 2x4 SP #3;

Plating Notes

All plates are 2X4(A1) except as noted.

Loading

Gable end supports 8" max rake overhang. Top chord must not be cut or notched.

Wind

Wind loads based on MWFRS with additional C&C member design.

Wind loading based on both gable and hip roof types.

Additional Notes

See DWGS A14015ENC160118 & GBLLETIN0118 for gable wind bracing and other requirements.

Refer to DWG PB160160118 for piggyback details.

YOONHWAK KIM
LICENSE
No. 86367
STATE OF
FLORIDA
PROFESSIONAL ENGINEER

FL REG# 278, Yoonhwak Kim, FL PE #86367
06/30/2021

****WARNING**** READ AND FOLLOW ALL NOTES ON THIS DRAWING!
****IMPORTANT**** FURNISH THIS DRAWING TO ALL CONTRACTORS INCLUDING THE INSTALLERS

Trusses require extreme care in fabricating, handling, shipping, installing and bracing. Refer to and follow the latest edition of BCSI (Building Component Safety Information, by TPI and SBCA) for safety practices prior to performing these functions. Installers shall provide temporary bracing per BCSI. Unless noted otherwise, top chord shall have properly attached structural sheathing and bottom chord shall have a properly attached rigid ceiling. Locations shown for permanent lateral restraint of webs shall have bracing installed per BCSI sections B3, B7, or B10, as applicable. Apply plates to each face of truss and position as shown above and on the Joint Details, unless noted otherwise. Refer to drawings 160A-Z for standard plate positions. Refer to job's General Notes page for additional information.

Alpine, a division of ITW Building Components Group Inc. shall not be responsible for any deviation from this drawing, any failure to build the truss in conformance with ANSI/TPI 1, or for handling, shipping, installation and bracing of trusses. A seal on this drawing or cover page listing this drawing, indicates acceptance of professional engineering responsibility solely for the design shown. The suitability and use of this drawing for any structure is the responsibility of the Building Designer per ANSI/TPI 1 Sec.2.

For more information see these web sites: Alpine: alpineitw.com; TPI: tpinst.org; SBCA: sbcindustry.com; ICC: iccsafe.org; AWC: awc.org

ALPINE
AN ITW COMPANY
6750 Forum Drive
Suite 305
Orlando FL, 32821

SEQN: 626833 GABL FROM: CDM	Ply: 1 Qty: 1	**Job Number:** 21-5642 Slone- Pamlico Cabin **Truss Label:** PB03	Cust: R 215 JRef: 1X6O2150013 T30 DrwNo: 181.21.1021.19313 SSB / YK 06/30/2021

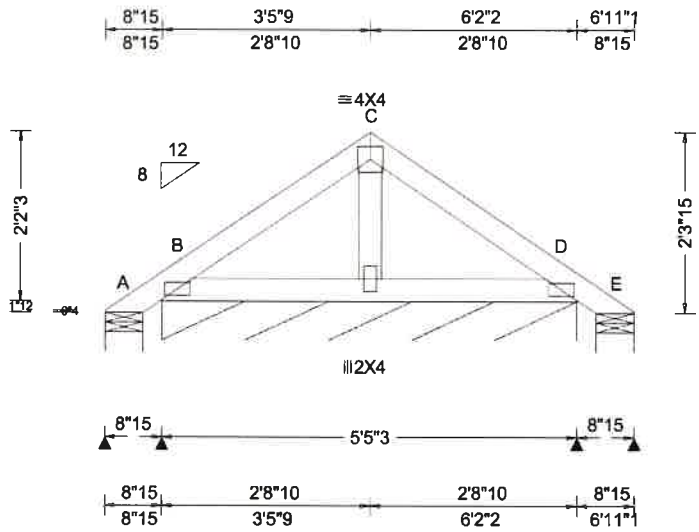

Loading Criteria (psf)		**Wind Criteria**	**Snow Criteria** (Pg,Pf in PSF)	**Defl/CSI Criteria**	**▲Maximum Reactions (lbs), or *=PLF**
TCLL:	20.00	Wind Std: ASCE 7-16	Pg: NA Ct: NA CAT: NA	PP Deflection in loc L/defl L/#	
TCDL:	10.00	Speed: 130 mph	Pf: NA Ce: NA	VERT(LL): 0.000 F 999 240	
BCLL:	0.00	Enclosure: Closed	Lu: NA Cs: NA	VERT(CL): 0.001 F 999 180	
BCDL:	10.00	Risk Category: II	Snow Duration: NA	HORZ(LL): 0.000 F - -	
Des Ld:	40.00	EXP: B Kzt: NA		HORZ(TL): 0.001 F - -	
NCBCLL:	10.00	Mean Height: 15.09 ft	Building Code:	Creep Factor: 2.0	
Soffit:	2.00	TCDL: 5.0 psf	FBC 7th Ed. 2020 Res.	Max TC CSI: 0.074	
Load Duration:	1.25	BCDL: 5.0 psf	TPI Std: 2014	Max BC CSI: 0.034	
Spacing:	24.0 "	MWFRS Parallel Dist: h to 2h	Rep Fac: Yes	Max Web CSI: 0.015	
		C&C Dist a: 3.00 ft	FT/RT:20(0)/10(0)		
		Loc. from endwall: not in 9.00 ft	Plate Type(s):		
		GCpi: 0.18	WAVE	VIEW Ver: 21.01.01A.0521.20	
		Wind Duration: 1.60			

	Gravity			Non-Gravity		
Loc	R+	/ R-	/ Rh	/ Rw	/ U	/ RL
A	-	/-16	/-	/31	/35	/43
B*	87	/-	/-	/62	/1	/-
E	-	/-16	/-	/7	/11	/-

Wind reactions based on MWFRS
A Brg Width = 5.9 Min Req = 1.5
B Brg Width = 65.2 Min Req = -
E Brg Width = 5.9 Min Req = 1.5
Bearings A, B, & E are a rigid surface.
Members not listed have forces less than 375#

Lumber

Top chord: 2x4 SP #2;
Bot chord: 2x4 SP #2;
Webs: 2x4 SP #3;

Plating Notes

All plates are 2X4(A1) except as noted.

Loading

Gable end supports 8" max rake overhang. Top chord must not be cut or notched.

Wind

Wind loads based on MWFRS with additional C&C member design.

Wind loading based on both gable and hip roof types.

Additional Notes

See DWGS A14030ENC160118 & GBLLETIN0118 for gable wind bracing and other requirements.

Refer to DWG PB160160118 for piggyback details.

YOONHWAK KIM
LICENSE
No. 86367
STATE OF
FLORIDA
PROFESSIONAL ENGINEER

FL REG# 278, Yoonhwak Kim, FL PE #86367
06/30/2021

****WARNING**** READ AND FOLLOW ALL NOTES ON THIS DRAWING!
****IMPORTANT**** FURNISH THIS DRAWING TO ALL CONTRACTORS INCLUDING THE INSTALLERS

Trusses require extreme care in fabricating, handling, shipping, installing and bracing. Refer to and follow the latest edition of BCSI (Building Component Safety Information, by TPI and SBCA) for safety practices prior to performing these functions. Installers shall provide temporary bracing per BCSI. Unless noted otherwise, top chord shall have properly attached structural sheathing and bottom chord shall have a properly attached rigid ceiling. Locations shown for permanent lateral restraint of webs shall have bracing installed per BCSI sections B3, B7, or B10, as applicable. Apply plates to each face of truss and position as shown above and on the Joint Details, unless noted otherwise. Refer to drawings 160A-Z for standard plate positions. Refer to job's General Notes page for additional information.

Alpine, a division of ITW Building Components Group Inc. shall not be responsible for any deviation from this drawing, any failure to build the truss in conformance with ANSI/TPI 1, or for handling, shipping, installation and bracing of trusses. A seal on this drawing or cover page listing this drawing, indicates acceptance of professional engineering responsibility solely for the design shown. The suitability and use of this drawing for any structure is the responsibility of the Building Designer per ANSI/TPI 1 Sec.2.

For more information see these web sites: Alpine: alpineitw.com; TPI: tpinst.org; SBCA: sbcindustry.com; ICC: iccsafe.org; AWC: awc.org

ALPINE
AN ITW COMPANY
6750 Forum Drive
Suite 305
Orlando FL, 32821

SEQN: 626837 GABL FROM: CDM	Ply: 1 Qty: 5	**Job Number:** 21-5642 Slone- Pamlico Cabin **Truss Label:** PB04	Cust: R 215 JRef: 1X6O2150013 T26 DrwNo: 181.21.1021.20330 SSB / YK 06/30/2021

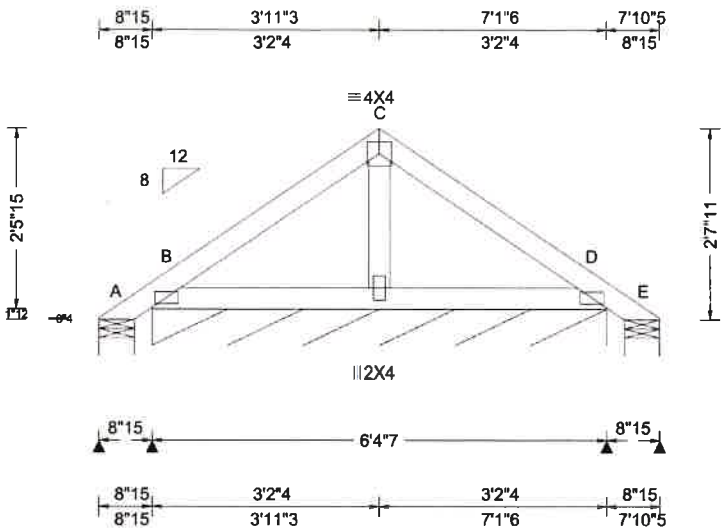

Loading Criteria (psf)
TCLL: 20.00
TCDL: 10.00
BCLL: 0.00
BCDL: 10.00
Des Ld: 40.00
NCBCLL: 10.00
Soffit: 2.00
Load Duration: 1.25
Spacing: 24.0 "

Wind Criteria
Wind Std: ASCE 7-16
Speed: 130 mph
Enclosure: Closed
Risk Category: II
EXP: B Kzt: NA
Mean Height: 15.00 ft
TCDL: 5.0 psf
BCDL: 5.0 psf
MWFRS Parallel Dist: h to 2h
C&C Dist a: 3.00 ft
Loc. from endwall: not in 13.00 ft
GCpi: 0.18
Wind Duration: 1.60

Snow Criteria (Pg,Pf in PSF)
Pg: NA Ct: NA CAT: NA
Pf: NA Ce: NA
Lu: NA Cs: NA
Snow Duration: NA

Building Code:
FBC 7th Ed. 2020 Res.
TPI Std: 2014
Rep Fac: Yes
FT/RT:20(0)/10(0)
Plate Type(s):
WAVE

Defl/CSI Criteria

PP Deflection in	loc	L/defl	L/#
VERT(LL): 0.001	F	999	240
VERT(CL): 0.001	F	999	180
HORZ(LL): 0.001	F	-	-
HORZ(TL): 0.001	F	-	-

Creep Factor: 2.0
Max TC CSI: 0.106
Max BC CSI: 0.047
Max Web CSI: 0.018

VIEW Ver: 21.01.01A.0521.20

▲Maximum Reactions (lbs), or *=PLF

	Gravity			Non-Gravity		
Loc	R+	/ R-	/ Rh	/ Rw	/ U	/ RL
A	-	/-36	/-	/39	/55	/50
B*	90	/-	/-	/64	/1	/-
E	-	/-36	/-	/12	/27	/-

Wind reactions based on MWFRS
A Brg Width = 5.9 Min Req = 1.5
B Brg Width = 76.4 Min Req = -
E Brg Width = 5.9 Min Req = 1.5
Bearings A, B, & E are a rigid surface.
Members not listed have forces less than 375#

Lumber

Top chord: 2x4 SP #2;
Bot chord: 2x4 SP #2;
Webs: 2x4 SP #3;

Plating Notes

All plates are 2X4(A1) except as noted.

Loading

Gable end supports 8" max rake overhang. Top chord must not be cut or notched.

Wind

Wind loads based on MWFRS with additional C&C member design.

Wind loading based on both gable and hip roof types.

Additional Notes

See DWGS A14015ENC160118 & GBLLETIN0118 for gable wind bracing and other requirements.

Refer to DWG PB160160118 for piggyback details.

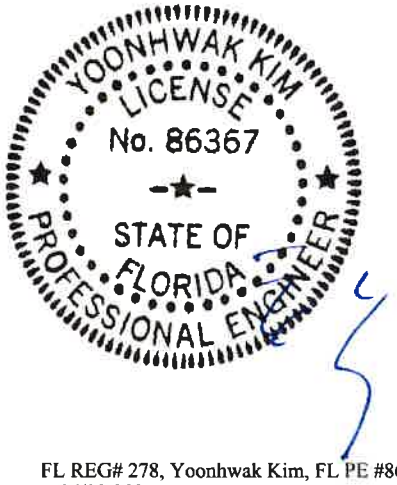

FL REG# 278, Yoonhwak Kim, FL PE #86367
06/30/2021

****WARNING**** READ AND FOLLOW ALL NOTES ON THIS DRAWING!
****IMPORTANT**** FURNISH THIS DRAWING TO ALL CONTRACTORS INCLUDING THE INSTALLERS

Trusses require extreme care in fabricating, handling, shipping, installing and bracing. Refer to and follow the latest edition of BCSI (Building Component Safety Information, by TPI and SBCA) for safety practices prior to performing these functions. Installers shall provide temporary bracing per BCSI. Unless noted otherwise, top chord shall have properly attached structural sheathing and bottom chord shall have a properly attached rigid ceiling. Locations shown for permanent lateral restraint of webs shall have bracing installed per BCSI sections B3, B7, or B10, as applicable. Apply plates to each face of truss and position as shown above and on the Joint Details, unless noted otherwise. Refer to drawings 160A-Z for standard plate positions. Refer to job's General Notes page for additional information.

Alpine, a division of ITW Building Components Group Inc. shall not be responsible for any deviation from this drawing, any failure to build the truss in conformance with ANSI/TPI 1, or for handling, shipping, installation and bracing of trusses. A seal on this drawing or cover page listing this drawing, indicates acceptance of professional engineering responsibility solely for the design shown. The suitability and use of this drawing for any structure is the responsibility of the Building Designer per ANSI/TPI 1 Sec.2.

For more information see these web sites: Alpine: alpineitw.com; TPI: tpinst.org; SBCA: sbcindustry.com; ICC: iccsafe.org; AWC: awc.org

ALPINE
AN ITW COMPANY
6750 Forum Drive
Suite 305
Orlando FL, 32821

SEQN: 626839 GABL FROM: CDM	Ply: 1 Qty: 1	**Job Number:** 21-5642 Slone- Pamlico Cabin **Truss Label:** PB05	Cust: R 215 JRef: 1X6O2150013 T29 DrwNo: 181.21.1021.21337 SSB / YK 06/30/2021

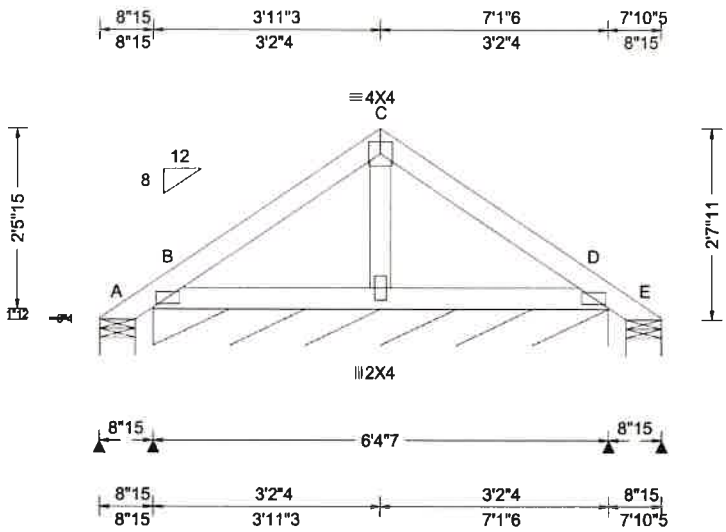

Loading Criteria (psf)

TCLL:	20.00
TCDL:	10.00
BCLL:	0.00
BCDL:	10.00
Des Ld:	40.00
NCBCLL:	10.00
Soffit:	2.00

Load Duration: 1.25
Spacing: 24.0 "

Wind Criteria
Wind Std: ASCE 7-16
Speed: 130 mph
Enclosure: Closed
Risk Category: II
EXP: B Kzt: NA
Mean Height: 15.00 ft
TCDL: 5.0 psf
BCDL: 5.0 psf
MWFRS Parallel Dist: h to 2h
C&C Dist a: 3.00 ft
Loc. from endwall: not in 13.00 ft
GCpi: 0.18
Wind Duration: 1.60

Snow Criteria (Pg,Pf in PSF)
Pg: NA Ct: NA CAT: NA
Pf: NA Ce: NA
Lu: NA Cs: NA
Snow Duration: NA

Building Code:
FBC 7th Ed. 2020 Res.
TPI Std: 2014
Rep Fac: Yes
FT/RT:20(0)/10(0)
Plate Type(s):
WAVE

Defl/CSI Criteria

PP Deflection in	loc	L/defl	L/#
VERT(LL): 0.001	F	999	240
VERT(CL): 0.001	F	999	180
HORZ(LL): 0.001	F	-	-
HORZ(TL): 0.001	F	-	-

Creep Factor: 2.0
Max TC CSI: 0.106
Max BC CSI: 0.047
Max Web CSI: 0.018

VIEW Ver: 21.01.01A.0521.20

▲ Maximum Reactions (lbs), or *=PLF

	Gravity			Non-Gravity		
Loc	R+	/ R-	/ Rh	/ Rw	/ U	/ RL
A	-	/-36	/-	/39	/55	/50
B*	90	/-	/-	/64	/1	/-
E	-	/-36	/-	/12	/27	/-

Wind reactions based on MWFRS
A Brg Width = 5.9 Min Req = 1.5
B Brg Width = 76.4 Min Req = -
E Brg Width = 5.9 Min Req = 1.5
Bearings A, B, & E are a rigid surface.
Members not listed have forces less than 375#

Lumber

Top chord: 2x4 SP #2;
Bot chord: 2x4 SP #2;
Webs: 2x4 SP #3;

Plating Notes

All plates are 2X4(A1) except as noted.

Loading

Gable end supports 8" max rake overhang. Top chord must not be cut or notched.

Wind

Wind loads based on MWFRS.

Wind loading based on both gable and hip roof types.

Additional Notes

See DWGS A14015ENC160118 & GBLLETIN0118 for gable wind bracing and other requirements.

Refer to DWG PB160160118 for piggyback details.

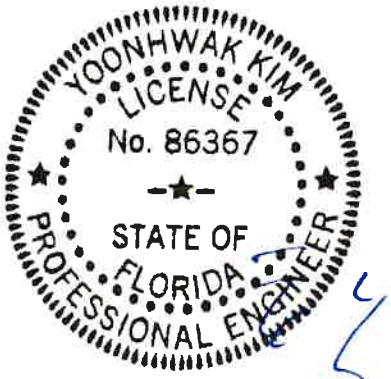

FL REG# 278, Yoonhwak Kim, FL PE #86367
06/30/2021

****WARNING**** READ AND FOLLOW ALL NOTES ON THIS DRAWING!
****IMPORTANT**** FURNISH THIS DRAWING TO ALL CONTRACTORS INCLUDING THE INSTALLERS

Trusses require extreme care in fabricating, handling, shipping, installing and bracing. Refer to and follow the latest edition of BCSI (Building Component Safety Information, by TPI and SBCA) for safety practices prior to performing these functions. Installers shall provide temporary bracing per BCSI. Unless noted otherwise, top chord shall have properly attached structural sheathing and bottom chord shall have a properly attached rigid ceiling. Locations shown for permanent lateral restraint of webs shall have bracing installed per BCSI sections B3, B7, or B10, as applicable. Apply plates to each face of truss and position as shown above and on the Joint Details, unless noted otherwise. Refer to drawings 160A-Z for standard plate positions. Refer to job's General Notes page for additional information.

Alpine, a division of ITW Building Components Group Inc. shall not be responsible for any deviation from this drawing, any failure to build the truss in conformance with ANSI/TPI 1, or for handling, shipping, installation and bracing of trusses. A seal on this drawing or cover page listing this drawing, indicates acceptance of professional engineering responsibility solely for the design shown. The suitability and use of this drawing for any structure is the responsibility of the Building Designer per ANSI/TPI 1 Sec.2.

For more information see these web sites: Alpine: alpineitw.com; TPI: tpinst.org; SBCA: sbcindustry.com; ICC: iccsafe.org; AWC: awc.org

ALPINE
AN ITW COMPANY
6750 Forum Drive
Suite 305
Orlando FL, 32821

SEQN: 626900 GABL FROM: CDM	Ply: 1 Qty: 3	**Job Number:** 21-5642 Slone- Pamlico Cabin **Truss Label:** PB06	Cust: R 215 JRef:1X6O2150013 T15 DrwNo: 181.21.1021.22523 SSB / YK 06/30/2021

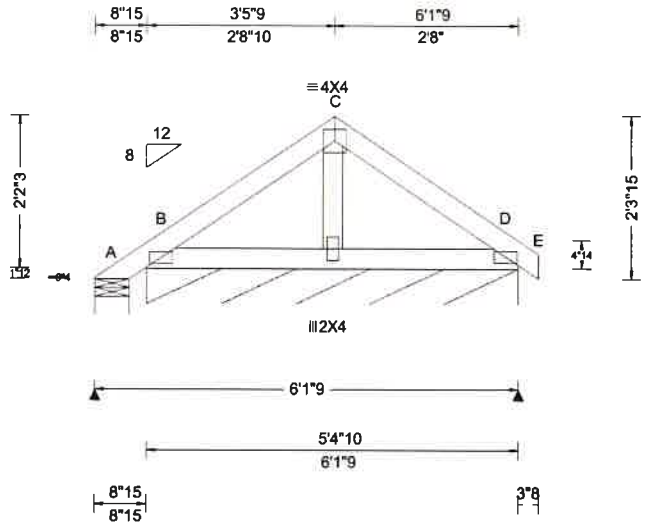

Loading Criteria (psf)	**Wind Criteria**	**Snow Criteria** (Pg,Pf in PSF)	**Defl/CSI Criteria**
TCLL: 20.00 TCDL: 10.00 BCLL: 0.00 BCDL: 10.00 Des Ld: 40.00 NCBCLL: 10.00 Soffit: 2.00 Load Duration: 1.25 Spacing: 24.0 "	Wind Std: ASCE 7-16 Speed: 130 mph Enclosure: Closed Risk Category: II EXP: B Kzt: NA Mean Height: 15.09 ft TCDL: 5.0 psf BCDL: 5.0 psf MWFRS Parallel Dist: h to 2h C&C Dist a: 3.00 ft Loc. from endwall: not in 9.00 ft GCpi: 0.18 Wind Duration: 1.60	Pg: NA Ct: NA CAT: NA Pf: NA Ce: NA Lu: NA Cs: NA Snow Duration: NA Building Code: FBC 7th Ed. 2020 Res. TPI Std: 2014 Rep Fac: Yes FT/RT:20(0)/10(0) Plate Type(s): WAVE	PP Deflection in loc L/defl L/# VERT(LL): 0.000 F 999 240 VERT(CL): 0.001 F 999 180 HORZ(LL): -0.000 F - - HORZ(TL): 0.001 F - - Creep Factor: 2.0 Max TC CSI: 0.081 Max BC CSI: 0.041 Max Web CSI: 0.013 VIEW Ver: 21.01.01A.0521.20

▲ Maximum Reactions (lbs), or *=PLF

	Gravity			Non-Gravity		
Loc	R+	/ R-	/ Rh	/ Rw	/ U	/ RL
A	-	/-15	/-	/30	/32	/40
B*	81	/-	/-	/60	/-	/-

Wind reactions based on MWFRS
A Brg Width = 5.9 Min Req = 1.5
B Brg Width = 64.6 Min Req = -
Bearings A & B are a rigid surface.
Members not listed have forces less than 375#

Lumber

Top chord: 2x4 SP #2;
Bot chord: 2x4 SP #2;
Webs: 2x4 SP #3;

Plating Notes

All plates are 2X4(A1) except as noted.

Loading

Gable end supports 8" max rake overhang. Top chord must not be cut or notched.

Wind

Wind loads based on MWFRS with additional C&C member design.

Wind loading based on both gable and hip roof types.

Additional Notes

See DWGS A14030ENC160118 & GBLLETIN0118 for gable wind bracing and other requirements.

Refer to DWG PB160160118 for piggyback details.

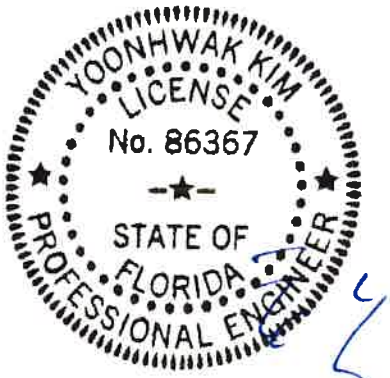

FL REG# 278, Yoonhwak Kim, FL PE #86367
06/30/2021

****WARNING**** READ AND FOLLOW ALL NOTES ON THIS DRAWING!
****IMPORTANT**** FURNISH THIS DRAWING TO ALL CONTRACTORS INCLUDING THE INSTALLERS

Trusses require extreme care in fabricating, handling, shipping, installing and bracing. Refer to and follow the latest edition of BCSI (Building Component Safety Information, by TPI and SBCA) for safety practices prior to performing these functions. Installers shall provide temporary bracing per BCSI. Unless noted otherwise, top chord shall have properly attached structural sheathing and bottom chord shall have a properly attached rigid ceiling. Locations shown for permanent lateral restraint of webs shall have bracing installed per BCSI sections B3, B7, or B10, as applicable. Apply plates to each face of truss and position as shown above and on the Joint Details, unless noted otherwise. Refer to drawings 160A-Z for standard plate positions. Refer to job's General Notes page for additional information.

Alpine, a division of ITW Building Components Group Inc. shall not be responsible for any deviation from this drawing, any failure to build the truss in conformance with ANSI/TPI 1, or for handling, shipping, installation and bracing of trusses. A seal on this drawing or cover page listing this drawing, indicates acceptance of professional engineering responsibility solely for the design shown. The suitability and use of this drawing for any structure is the responsibility of the Building Designer per ANSI/TPI 1 Sec.2.

For more information see these web sites: Alpine: alpineitw.com; TPI: tpinst.org; SBCA: sbcindustry.com; ICC: iccsafe.org; AWC: awc.org

ALPINE
AN ITW COMPANY
6750 Forum Drive
Suite 305
Orlando FL, 32821

SEQN: 626908 GABL FROM: CDM	Ply: 1 Qty: 1	**Job Number:** 21-5642 Slone- Pamlico Cabin **Truss Label:** PB07	Cust: R 215 JRef: 1X6O2150013 T20 DrwNo: 181.21.1021.23450 SSB / YK 06/30/2021

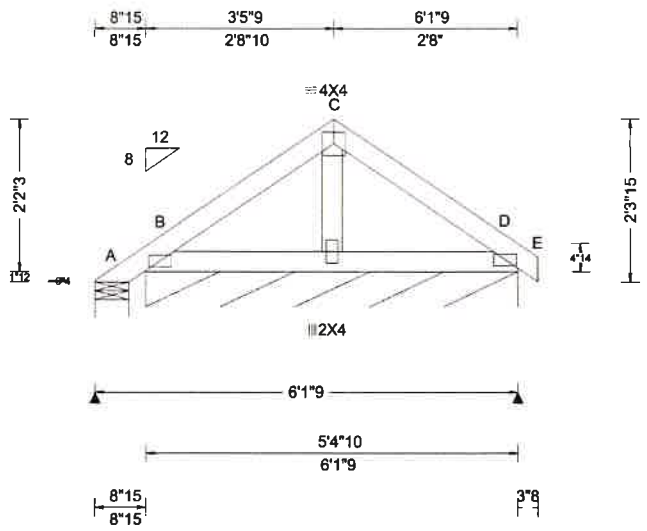

Loading Criteria (psf)	**Wind Criteria**	**Snow Criteria** (Pg,Pf in PSF)	**Defl/CSI Criteria**
TCLL: 20.00 TCDL: 10.00 BCLL: 0.00 BCDL: 10.00 Des Ld: 40.00 NCBCLL: 10.00 Soffit: 2.00 Load Duration: 1.25 Spacing: 24.0 "	Wind Std: ASCE 7-16 Speed: 130 mph Enclosure: Closed Risk Category: II EXP: B Kzt: NA Mean Height: 15.09 ft TCDL: 5.0 psf BCDL: 5.0 psf MWFRS Parallel Dist: h to 2h C&C Dist a: 3.00 ft Loc. from endwall: not in 9.00 ft GCpi: 0.18 Wind Duration: 1.60	Pg: NA Ct: NA CAT: NA Pf: NA Ce: NA Lu: NA Cs: NA Snow Duration: NA Building Code: FBC 7th Ed. 2020 Res. TPI Std: 2014 Rep Fac: Yes FT/RT:20(0)/10(0) Plate Type(s): WAVE	PP Deflection in loc L/defl L/# VERT(LL): 0.000 F 999 240 VERT(CL): 0.001 F 999 180 HORZ(LL): -0.000 F - - HORZ(TL): 0.001 F - - Creep Factor: 2.0 Max TC CSI: 0.081 Max BC CSI: 0.041 Max Web CSI: 0.013 VIEW Ver: 21.01.01A.0521.20

▲ Maximum Reactions (lbs), or *=PLF

	Gravity		Non-Gravity			
Loc	R+	/ R-	/ Rh	/ Rw	/ U	/ RL
A	-	/-15	/-	/30	/32	/40
B*	81	/-	/-	/58	/0	/-

Wind reactions based on MWFRS
A Brg Width = 5.9 Min Req = 1.5
B Brg Width = 64.6 Min Req = -
Bearings A & B are a rigid surface.
Members not listed have forces less than 375#

Lumber

Top chord: 2x4 SP #2;
Bot chord: 2x4 SP #2;
Webs: 2x4 SP #3;

Plating Notes

All plates are 2X4(A1) except as noted.

Loading

Gable end supports 8" max rake overhang. Top chord must not be cut or notched.

Wind

Wind loads based on MWFRS with additional C&C member design.

Wind loading based on both gable and hip roof types.

Additional Notes

See DWGS A14030ENC160118 & GBLLETIN0118 for gable wind bracing and other requirements.

Refer to DWG PB160160118 for piggyback details.

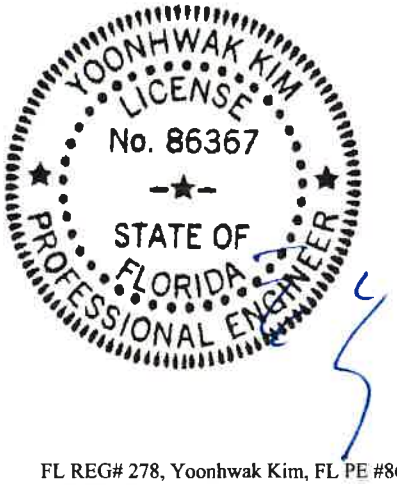

FL REG# 278, Yoonhwak Kim, FL PE #86367
06/30/2021

****WARNING**** READ AND FOLLOW ALL NOTES ON THIS DRAWING!
****IMPORTANT**** FURNISH THIS DRAWING TO ALL CONTRACTORS INCLUDING THE INSTALLERS

Trusses require extreme care in fabricating, handling, shipping, installing and bracing. Refer to and follow the latest edition of BCSI (Building Component Safety Information, by TPI and SBCA) for safety practices prior to performing these functions. Installers shall provide temporary bracing per BCSI. Unless noted otherwise, top chord shall have properly attached structural sheathing and bottom chord shall have a properly attached rigid ceiling. Locations shown for permanent lateral restraint of webs shall have bracing installed per BCSI sections B3, B7, or B10, as applicable. Apply plates to each face of truss and position as shown above and on the Joint Details, unless noted otherwise. Refer to drawings 160A-Z for standard plate positions. Refer to job's General Notes page for additional information.

Alpine, a division of ITW Building Components Group Inc. shall not be responsible for any deviation from this drawing, any failure to build the truss in conformance with ANSI/TPI 1, or for handling, shipping, installation and bracing of trusses. A seal on this drawing or cover page listing this drawing, indicates acceptance of professional engineering responsibility solely for the design shown. The suitability and use of this drawing for any structure is the responsibility of the Building Designer per ANSI/TPI 1 Sec.2.

For more information see these web sites: Alpine: alpineitw.com; TPI: tpinst.org; SBCA: sbcindustry.com; ICC: iccsafe.org; AWC: awc.org

ALPINE
AN ITW COMPANY
6750 Forum Drive
Suite 305
Orlando FL, 32821

SEQN: 626895 COMN FROM: CDM	Ply: 1 Qty: 1	**Job Number:** 21-5642 Stone- Pamlico Cabin **Truss Label:** PB08	Cust: R 215 JRef: 1X6O2150013 T13 DrwNo: 181.21.1021.24447 SSB / YK 06/30/2021

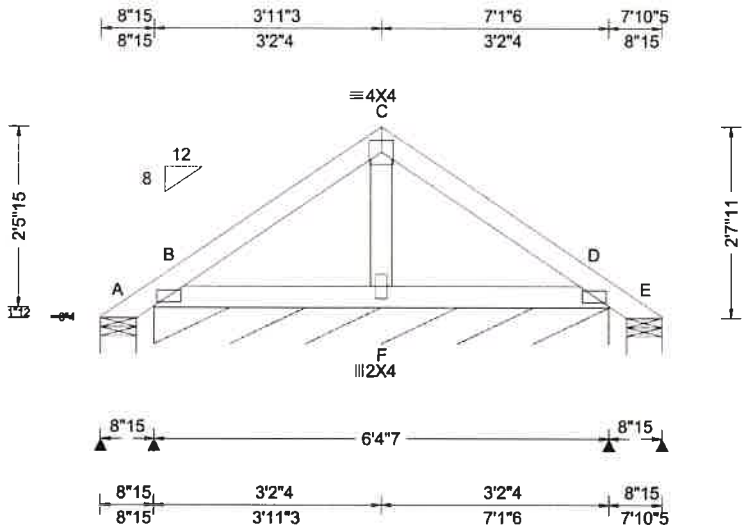

Loading Criteria (psf)	**Wind Criteria**	**Snow Criteria** (Pg,Pf in PSF)	**Defl/CSI Criteria**
TCLL: 20.00 TCDL: 10.00 BCLL: 0.00 BCDL: 10.00 Des Ld: 40.00 NCBCLL: 10.00 Soffit: 2.00 Load Duration: 1.25 Spacing: 24.0 "	Wind Std: ASCE 7-16 Speed: 130 mph Enclosure: Closed Risk Category: II EXP: B Kzt: NA Mean Height: 20.11 ft TCDL: 5.0 psf BCDL: 2.0 psf MWFRS Parallel Dist: h/2 to h C&C Dist a: 3.00 ft Loc. from endwall: not in 9.00 ft GCpi: 0.18 Wind Duration: 1.60	Pg: NA Ct: NA CAT: NA Pf: NA Ce: NA Lu: NA Cs: NA Snow Duration: NA Building Code: FBC 7th Ed. 2020 Res. TPI Std: 2014 Rep Fac: Yes FT/RT:20(0)/10(0) Plate Type(s): WAVE	PP Deflection in loc L/defl L/# VERT(LL): 0.001 F 999 240 VERT(CL): 0.001 F 999 180 HORZ(LL): 0.001 F - - HORZ(TL): 0.001 F - - Creep Factor: 2.0 Max TC CSI: 0.106 Max BC CSI: 0.045 Max Web CSI: 0.018 VIEW Ver: 21.01.01A.0521.20

▲ Maximum Reactions (lbs), or *=PLF

	Gravity			Non-Gravity		
Loc	R+	/ R-	/ Rh	/ Rw	/ U	/ RL
A	-	/-39	/-	/39	/59	/49
B*	90	/-	/-	/60	/15	/-
E	-	/-39	/-	/15	/32	/-

Wind reactions based on MWFRS
A Brg Width = 5.9 Min Req = 1.5
B Brg Width = 76.4 Min Req = -
E Brg Width = 5.9 Min Req = 1.5
Bearings A, B, & E are a rigid surface.
Members not listed have forces less than 375#

Lumber

Top chord: 2x4 SP #2;
Bot chord: 2x4 SP #2;
Webs: 2x4 SP #3;

Plating Notes

All plates are 2X4(A1) except as noted.

Wind

Wind loads based on MWFRS.

Wind loading based on both gable and hip roof types.

Additional Notes

Refer to DWG PB160160118 for piggyback details.

YOONHWAK KIM
LICENSE
No. 86367
STATE OF
FLORIDA
PROFESSIONAL ENGINEER

FL REG# 278, Yoonhwak Kim, FL PE #86367
06/30/2021

****WARNING**** READ AND FOLLOW ALL NOTES ON THIS DRAWING!
****IMPORTANT**** FURNISH THIS DRAWING TO ALL CONTRACTORS INCLUDING THE INSTALLERS

Trusses require extreme care in fabricating, handling, shipping, installing and bracing. Refer to and follow the latest edition of BCSI (Building Component Safety Information, by TPI and SBCA) for safety practices prior to performing these functions. Installers shall provide temporary bracing per BCSI. Unless noted otherwise, top chord shall have properly attached structural sheathing and bottom chord shall have a properly attached rigid ceiling. Locations shown for permanent lateral restraint of webs shall have bracing installed per BCSI sections B3, B7, or B10, as applicable. Apply plates to each face of truss and position as shown above and on the Joint Details, unless noted otherwise. Refer to drawings 160A-Z for standard plate positions. Refer to job's General Notes page for additional information.

Alpine, a division of ITW Building Components Group Inc. shall not be responsible for any deviation from this drawing, any failure to build the truss in conformance with ANSI/TPI 1, or for handling, shipping, installation and bracing of trusses. A seal on this drawing or cover page listing this drawing, indicates acceptance of professional engineering responsibility solely for the design shown. The suitability and use of this drawing for any structure is the responsibility of the Building Designer per ANSI/TPI 1 Sec.2.

For more information see these web sites: Alpine: alpineitw.com; TPI: tpinst.org; SBCA: sbcindustry.com; ICC: iccsafe.org; AWC: awc.org

ALPINE
AN ITW COMPANY
6750 Forum Drive
Suite 305
Orlando FL, 32821

SEQN: 626942 VAL FROM: CDM	Ply: 1 Qty: 1	**Job Number:** 21-5642 Slone- Parnlico Cabin **Truss Label:** V01	Cust: R 215 JRef: 1X6O2150013 T8 DrwNo: 181.21.1021.25893 SSB / YK 06/30/2021

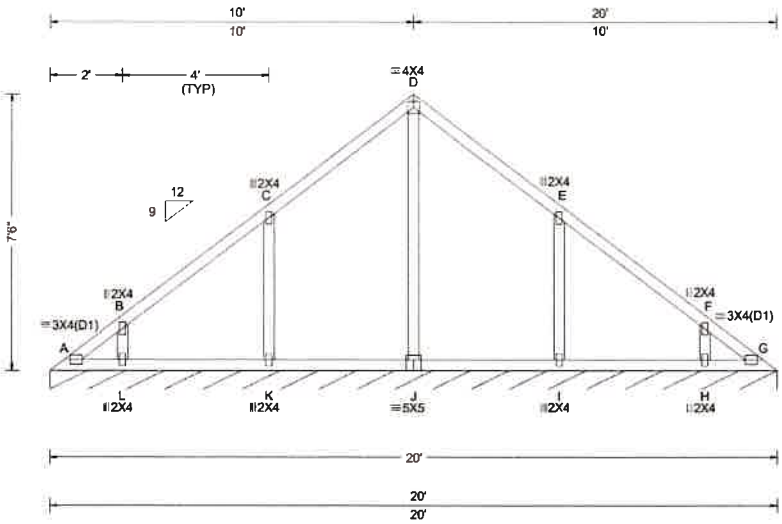

Loading Criteria (psf)	**Wind Criteria**	**Snow Criteria** (Pg,Pf in PSF)	**Defl/CSI Criteria**	**▲ Maximum Reactions (lbs), or *=PLF**
TCLL: 20.00 TCDL: 10.00 BCLL: 0.00 BCDL: 10.00 Des Ld: 40.00 NCBCLL: 10.00 Soffit: 2.00 Load Duration: 1.25 Spacing: 24.0 "	Wind Std: ASCE 7-16 Speed: 130 mph Enclosure: Closed Risk Category: II EXP: B Kzt: NA Mean Height: 15.00 ft TCDL: 5.0 psf BCDL: 5.0 psf MWFRS Parallel Dist: h/2 to h C&C Dist a: 3.00 ft Loc. from endwall: not in 4.50 ft GCpi: 0.18 Wind Duration: 1.60	Pg: NA Ct: NA CAT: NA Pf: NA Ce: NA Lu: NA Cs: NA Snow Duration: NA Building Code: FBC 7th Ed. 2020 Res. TPI Std: 2014 Rep Fac: Yes FT/RT:20(0)/10(0) Plate Type(s): WAVE	PP Deflection in loc L/defl L/# VERT(LL): 0.001 D 999 240 VERT(CL): 0.002 D 999 180 HORZ(LL): 0.001 E - - HORZ(TL): 0.002 E - - Creep Factor: 2.0 Max TC CSI: 0.222 Max BC CSI: 0.112 Max Web CSI: 0.169 VIEW Ver: 21.01.01A.0521.20	Gravity / Non-Gravity Loc R+ / R- / Rh / Rw / U / RL G* 85 /- /- /45 /1 /7 Wind reactions based on MWFRS G Brg Width = 239 Min Req = - Bearing A is a rigid surface. Members not listed have forces less than 375#

Lumber

Top chord: 2x4 SP #2;
Bot chord: 2x4 SP #2;
Webs: 2x4 SP #3;

Wind

Wind loads based on MWFRS with additional C&C member design.

Wind loading based on both gable and hip roof types.

Additional Notes

See DWGS VALTN160118 and VAL180160118 for valley details.

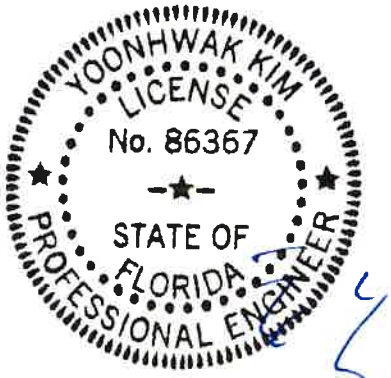

FL REG# 278, Yoonhwak Kim, FL PE #86367
06/30/2021

****WARNING**** READ AND FOLLOW ALL NOTES ON THIS DRAWING!
****IMPORTANT**** FURNISH THIS DRAWING TO ALL CONTRACTORS INCLUDING THE INSTALLERS

Trusses require extreme care in fabricating, handling, shipping, installing and bracing. Refer to and follow the latest edition of BCSI (Building Component Safety Information, by TPI and SBCA) for safety practices prior to performing these functions. Installers shall provide temporary bracing per BCSI. Unless noted otherwise, top chord shall have properly attached structural sheathing and bottom chord shall have a properly attached rigid ceiling. Locations shown for permanent lateral restraint of webs shall have bracing installed per BCSI sections B3, B7, or B10, as applicable. Apply plates to each face of truss and position as shown above and on the Joint Details, unless noted otherwise. Refer to drawings 160A-Z for standard plate positions. Refer to job's General Notes page for additional information.

Alpine, a division of ITW Building Components Group Inc. shall not be responsible for any deviation from this drawing, any failure to build the truss in conformance with ANSI/TPI 1, or for handling, shipping, installation and bracing of trusses. A seal on this drawing or cover page listing this drawing, indicates acceptance of professional engineering responsibility solely for the design shown. The suitability and use of this drawing for any structure is the responsibility of the Building Designer per ANSI/TPI 1 Sec.2.

For more information see these web sites: Alpine: alpineitw.com; TPI: tpinst.org; SBCA: sbcindustry.com; ICC: iccsafe.org; AWC: awc.org

ALPINE
AN ITW COMPANY
6750 Forum Drive
Suite 305
Orlando FL, 32821

SEQN: 626945 VAL FROM: CDM	Ply: 1 Qty: 1	**Job Number:** 21-5642 Slone- Pamlico Cabin **Truss Label:** V02	Cust: R 215 JRef:1X6O2150013 T31 DrwNo: 181.21.1021.27293 SSB / YK 06/30/2021

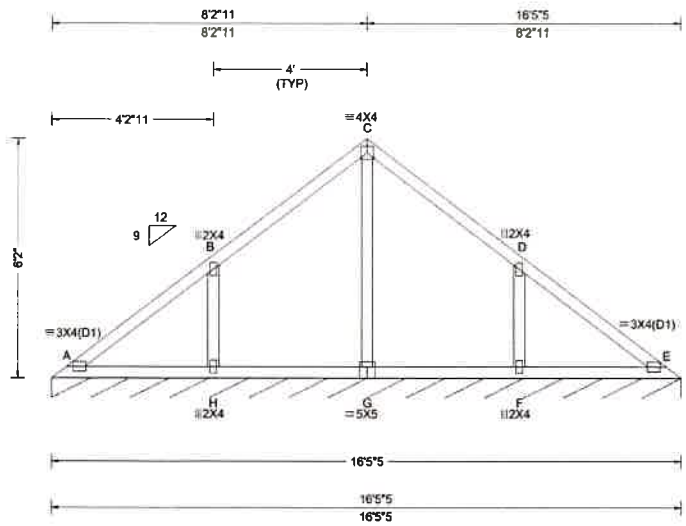

Loading Criteria (psf)	**Wind Criteria**	**Snow Criteria** (Pg,Pf in PSF)	**Defl/CSI Criteria**	**▲ Maximum Reactions (lbs), or *=PLF**
TCLL: 20.00 TCDL: 10.00 BCLL: 0.00 BCDL: 10.00 Des Ld: 40.00 NCBCLL: 10.00 Soffit: 2.00 Load Duration: 1.25 Spacing: 24.0 "	Wind Std: ASCE 7-16 Speed: 130 mph Enclosure: Closed Risk Category: II EXP: B Kzt: NA Mean Height: 15.00 ft TCDL: 5.0 psf BCDL: 5.0 psf MWFRS Parallel Dist: h/2 to h C&C Dist a: 3.00 ft Loc. from endwall: not in 9.00 ft GCpi: 0.18 Wind Duration: 1.60	Pg: NA Ct: NA CAT: NA Pf: NA Ce: NA Lu: NA Cs: NA Snow Duration: NA Building Code: FBC 7th Ed. 2020 Res. TPI Std: 2014 Rep Fac: Yes FT/RT:20(0)/10(0) Plate Type(s): WAVE	PP Deflection in loc L/defl L/# VERT(LL): 0.005 H 999 240 VERT(CL): 0.011 H 999 180 HORZ(LL): -0.002 F - - HORZ(TL): 0.004 F - - Creep Factor: 2.0 Max TC CSI: 0.279 Max BC CSI: 0.157 Max Web CSI: 0.175 VIEW Ver: 21.01.01A.0521.20	Gravity / Non-Gravity Loc R+ / R- / Rh / Rw / U / RL E* 85 /- /- /45 /1 /7 Wind reactions based on MWFRS E Brg Width = 197 Min Req = - Bearing A is a rigid surface. Members not listed have forces less than 375#

Lumber

Top chord: 2x4 SP #2;
Bot chord: 2x4 SP #2;
Webs: 2x4 SP #3;

Wind

Wind loads based on MWFRS with additional C&C member design.

Wind loading based on both gable and hip roof types.

Additional Notes

See DWGS VALTN160118 and VAL180160118 for valley details.

YOONHWAK KIM
LICENSE
No. 86367
STATE OF
FLORIDA
PROFESSIONAL ENGINEER

FL REG# 278, Yoonhwak Kim, FL PE #86367
06/30/2021

****WARNING**** READ AND FOLLOW ALL NOTES ON THIS DRAWING!
****IMPORTANT**** FURNISH THIS DRAWING TO ALL CONTRACTORS INCLUDING THE INSTALLERS

Trusses require extreme care in fabricating, handling, shipping, installing and bracing. Refer to and follow the latest edition of BCSI (Building Component Safety Information, by TPI and SBCA) for safety practices prior to performing these functions. Installers shall provide temporary bracing per BCSI. Unless noted otherwise, top chord shall have properly attached structural sheathing and bottom chord shall have a properly attached rigid ceiling. Locations shown for permanent lateral restraint of webs shall have bracing installed per BCSI sections B3, B7, or B10, as applicable. Apply plates to each face of truss and position as shown above and on the Joint Details, unless noted otherwise. Refer to drawings 160A-Z for standard plate positions. Refer to job's General Notes page for additional information.

Alpine, a division of ITW Building Components Group Inc. shall not be responsible for any deviation from this drawing, any failure to build the truss in conformance with ANSI/TPI 1, or for handling, shipping, installation and bracing of trusses. A seal on this drawing or cover page listing this drawing, indicates acceptance of professional engineering responsibility solely for the design shown. The suitability and use of this drawing for any structure is the responsibility of the Building Designer per ANSI/TPI 1 Sec.2.

For more information see these web sites: Alpine: alpineitw.com; TPI: tpinst.org; SBCA: sbcindustry.com; ICC: iccsafe.org; AWC: awc.org

ALPINE
AN ITW COMPANY
6750 Forum Drive
Suite 305
Orlando FL, 32821

SEQN: 626956 VAL FROM: CDM	Ply: 1 Qty: 1	**Job Number:** 21-5642 Slone- Pamlico Cabin **Truss Label:** V03	Cust: R 215 JRef:1X6O2150013 T32 DrwNo: 181.21.1021.29750 SSB / YK 06/30/2021

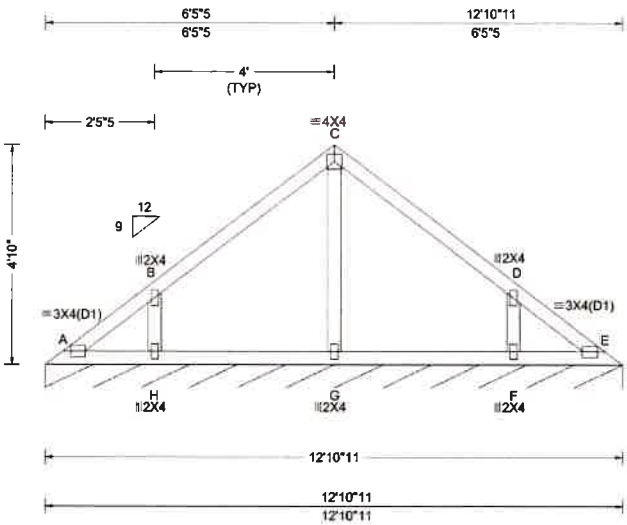

Loading Criteria (psf)	Wind Criteria	Snow Criteria (Pg,Pf in PSF)	Defl/CSI Criteria	▲ Maximum Reactions (lbs), or *=PLF
TCLL: 20.00 TCDL: 10.00 BCLL: 0.00 BCDL: 10.00 Des Ld: 40.00 NCBCLL: 10.00 Soffit: 2.00 Load Duration: 1.25 Spacing: 24.0 "	Wind Std: ASCE 7-16 Speed: 130 mph Enclosure: Closed Risk Category: II EXP: B Kzt: NA Mean Height: 15.00 ft TCDL: 5.0 psf BCDL: 5.0 psf MWFRS Parallel Dist: h/2 to h C&C Dist a: 3.00 ft Loc. from endwall: not in 9.00 ft GCpi: 0.18 Wind Duration: 1.60	Pg: NA Ct: NA CAT: NA Pf: NA Ce: NA Lu: NA Cs: NA Snow Duration: NA Building Code: FBC 7th Ed. 2020 Res. TPI Std: 2014 Rep Fac: Yes FT/RT:20(0)/10(0) Plate Type(s): WAVE	PP Deflection in loc L/defl L/# VERT(LL): 0.001 C 999 240 VERT(CL): 0.001 C 999 180 HORZ(LL): -0.001 B - - HORZ(TL): 0.001 B - - Creep Factor: 2.0 Max TC CSI: 0.214 Max BC CSI: 0.115 Max Web CSI: 0.073 VIEW Ver: 21.01.01A.0521.20	Gravity / Non-Gravity Loc R+ / R- / Rh / Rw / U / RL E* 85 /- /- /45 /0 /7 Wind reactions based on MWFRS E Brg Width = 154 Min Req = - Bearing A is a rigid surface. Members not listed have forces less than 375#

Lumber

Top chord: 2x4 SP #2;
Bot chord: 2x4 SP #2;
Webs: 2x4 SP #3;

Wind

Wind loads based on MWFRS with additional C&C member design.

Wind loading based on both gable and hip roof types.

Additional Notes

See DWGS VALTN160118 and VAL180160118 for valley details.

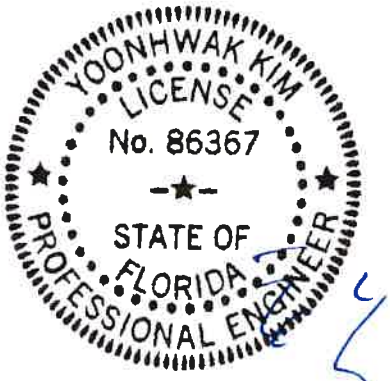

FL REG# 278, Yoonhwak Kim, FL PE #86367
06/30/2021

****WARNING**** READ AND FOLLOW ALL NOTES ON THIS DRAWING!
****IMPORTANT**** FURNISH THIS DRAWING TO ALL CONTRACTORS INCLUDING THE INSTALLERS

Trusses require extreme care in fabricating, handling, shipping, installing and bracing. Refer to and follow the latest edition of BCSI (Building Component Safety Information, by TPI and SBCA) for safety practices prior to performing these functions. Installers shall provide temporary bracing per BCSI. Unless noted otherwise, top chord shall have properly attached structural sheathing and bottom chord shall have a properly attached rigid ceiling. Locations shown for permanent lateral restraint of webs shall have bracing installed per BCSI sections B3, B7, or B10, as applicable. Apply plates to each face of truss and position as shown above and on the Joint Details, unless noted otherwise. Refer to drawings 160A-Z for standard plate positions. Refer to job's General Notes page for additional information.

Alpine, a division of ITW Building Components Group Inc. shall not be responsible for any deviation from this drawing, any failure to build the truss in conformance with ANSI/TPI 1, or for handling, shipping, installation and bracing of trusses. A seal on this drawing or cover page listing this drawing, indicates acceptance of professional engineering responsibility solely for the design shown. The suitability and use of this drawing for any structure is the responsibility of the Building Designer per ANSI/TPI 1 Sec.2.

For more information see these web sites: Alpine: alpineitw.com; TPI: tpinst.org; SBCA: sbcindustry.com; ICC: iccsafe.org; AWC: awc.org

ALPINE
AN ITW COMPANY
6750 Forum Drive
Suite 305
Orlando FL, 32821

SEQN: 626951 VAL FROM: CDM	Ply: 1 Qty: 1	**Job Number:** 21-5642 Slone- Pamlico Cabin **Truss Label:** V04	Cust: R 215 JRef: 1X6O2150013 T33 DrwNo: 181.21.1021.30983 SSB / YK 06/30/2021

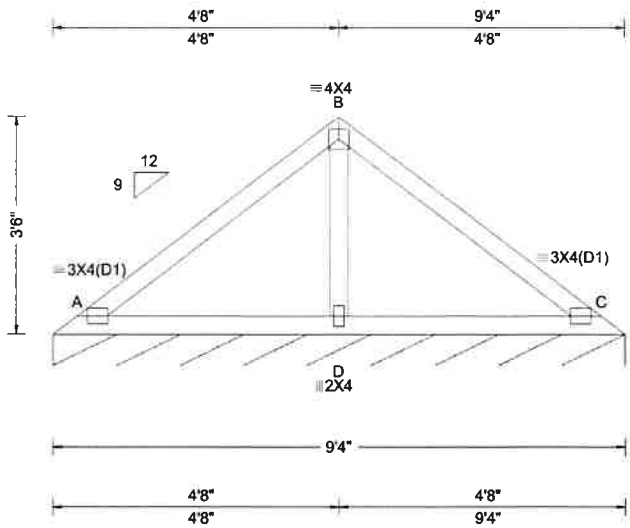

Loading Criteria (psf)	**Wind Criteria**	**Snow Criteria** (Pg,Pf in PSF)	**Defl/CSI Criteria**
TCLL: 20.00 TCDL: 10.00 BCLL: 0.00 BCDL: 10.00 Des Ld: 40.00 NCBCLL: 10.00 Soffit: 2.00 Load Duration: 1.25 Spacing: 24.0 "	Wind Std: ASCE 7-16 Speed: 130 mph Enclosure: Closed Risk Category: II EXP: B Kzt: NA Mean Height: 15.00 ft TCDL: 5.0 psf BCDL: 5.0 psf MWFRS Parallel Dist: h/2 to h C&C Dist a: 3.00 ft Loc. from endwall: not in 9.00 ft GCpi: 0.18 Wind Duration: 1.60	Pg: NA Ct: NA CAT: NA Pf: NA Ce: NA Lu: NA Cs: NA Snow Duration: NA Building Code: FBC 7th Ed. 2020 Res. TPI Std: 2014 Rep Fac: Yes FT/RT:20(0)/10(0) Plate Type(s): WAVE	PP Deflection in loc L/defl L/# VERT(LL): 0.009 D 999 240 VERT(CL): 0.020 D 999 180 HORZ(LL): -0.005 D - - HORZ(TL): 0.011 D - - Creep Factor: 2.0 Max TC CSI: 0.302 Max BC CSI: 0.252 Max Web CSI: 0.127 VIEW Ver: 21.01.01A.0521.20

▲ Maximum Reactions (lbs), or *=PLF

	Gravity			Non-Gravity		
Loc	R+	/ R-	/ Rh	/ Rw	/ U	/ RL
C*	85	/-	/-	/44	/-	/7

Wind reactions based on MWFRS
C Brg Width = 111 Min Req = -
Bearing A is a rigid surface.
Members not listed have forces less than 375#

Maximum Web Forces Per Ply (lbs)

Webs	Tens.	Comp.
B - D	179	-512

Lumber

Top chord: 2x4 SP #2;
Bot chord: 2x4 SP #2;
Webs: 2x4 SP #3;

Wind

Wind loads based on MWFRS with additional C&C member design.

Wind loading based on both gable and hip roof types.

Additional Notes

See DWGS VALTN160118 and VAL180160118 for valley details.

YOONHWAK KIM
LICENSE
No. 86367
STATE OF
FLORIDA
PROFESSIONAL ENGINEER

FL REG# 278, Yoonhwak Kim, FL PE #86367
06/30/2021

****WARNING**** READ AND FOLLOW ALL NOTES ON THIS DRAWING!
****IMPORTANT**** FURNISH THIS DRAWING TO ALL CONTRACTORS INCLUDING THE INSTALLERS

Trusses require extreme care in fabricating, handling, shipping, installing and bracing. Refer to and follow the latest edition of BCSI (Building Component Safety Information, by TPI and SBCA) for safety practices prior to performing these functions. Installers shall provide temporary bracing per BCSI. Unless noted otherwise, top chord shall have properly attached structural sheathing and bottom chord shall have a properly attached rigid ceiling. Locations shown for permanent lateral restraint of webs shall have bracing installed per BCSI sections B3, B7, or B10, as applicable. Apply plates to each face of truss and position as shown above and on the Joint Details, unless noted otherwise. Refer to drawings 160A-Z for standard plate positions. Refer to job's General Notes page for additional information.

Alpine, a division of ITW Building Components Group Inc. shall not be responsible for any deviation from this drawing, any failure to build the truss in conformance with ANSI/TPI 1, or for handling, shipping, installation and bracing of trusses. A seal on this drawing or cover page listing this drawing, indicates acceptance of professional engineering responsibility solely for the design shown. The suitability and use of this drawing for any structure is the responsibility of the Building Designer per ANSI/TPI 1 Sec.2.

For more information see these web sites: Alpine: alpineitw.com; TPI: tpinst.org; SBCA: sbcindustry.com; ICC: iccsafe.org; AWC: awc.org

ALPINE
AN ITW COMPANY
6750 Forum Drive
Suite 305
Orlando FL, 32821

SEQN: 626953 VAL FROM: CDM	Ply: 1 Qty: 1	**Job Number:** 21-5642 Slone- Pamlico Cabin **Truss Label:** V05	Cust: R 215 JRef: 1X6O2150013 T34 DrwNo: 181.21.1021.32297 SSB / YK 06/30/2021

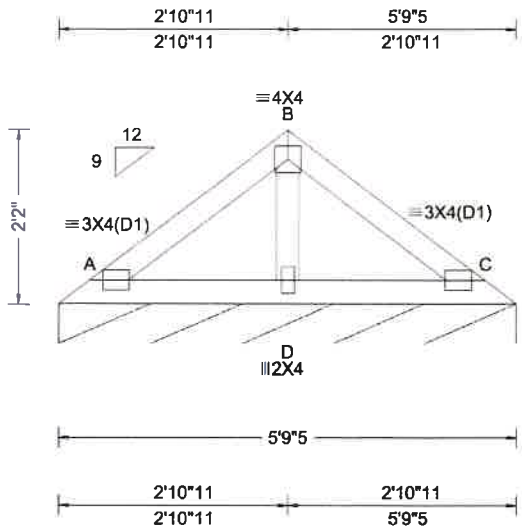

Loading Criteria (psf)	**Wind Criteria**	**Snow Criteria** (Pg,Pf in PSF)	**Defl/CSI Criteria**	**▲Maximum Reactions (lbs), or *=PLF**
TCLL: 20.00 TCDL: 10.00 BCLL: 0.00 BCDL: 10.00 Des Ld: 40.00 NCBCLL: 10.00 Soffit: 2.00 Load Duration: 1.25 Spacing: 24.0 "	Wind Std: ASCE 7-16 Speed: 130 mph Enclosure: Closed Risk Category: II EXP: B Kzt: NA Mean Height: 15.40 ft TCDL: 5.0 psf BCDL: 5.0 psf MWFRS Parallel Dist: h to 2h C&C Dist a: 3.00 ft Loc. from endwall: not in 9.00 ft GCpi: 0.18 Wind Duration: 1.60	Pg: NA Ct: NA CAT: NA Pf: NA Ce: NA Lu: NA Cs: NA Snow Duration: NA Building Code: FBC 7th Ed. 2020 Res. TPI Std: 2014 Rep Fac: Yes FT/RT:20(0)/10(0) Plate Type(s): WAVE	PP Deflection in loc L/defl L/# VERT(LL): 0.002 D 999 240 VERT(CL): 0.005 D 999 180 HORZ(LL): -0.001 D - - HORZ(TL): 0.003 D - - Creep Factor: 2.0 Max TC CSI: 0.096 Max BC CSI: 0.083 Max Web CSI: 0.046 VIEW Ver: 21.01.01A.0521.20	Gravity / Non-Gravity Loc R+ / R- / Rh / Rw / U / RL C* 84 / - / - / 43 / - / 6 Wind reactions based on MWFRS C Brg Width = 69.3 Min Req = - Bearing A is a rigid surface. Members not listed have forces less than 375#

Lumber

Top chord: 2x4 SP #2;
Bot chord: 2x4 SP #2;
Webs: 2x4 SP #3;

Wind

Wind loads based on MWFRS with additional C&C member design.

Wind loading based on both gable and hip roof types.

Additional Notes

See DWGS VALTN160118 and VAL180160118 for valley details.

YOONHWAK KIM
LICENSE
No. 86367
STATE OF
FLORIDA
PROFESSIONAL ENGINEER

FL REG# 278, Yoonhwak Kim, FL PE #86367
06/30/2021

****WARNING**** READ AND FOLLOW ALL NOTES ON THIS DRAWING!
****IMPORTANT**** FURNISH THIS DRAWING TO ALL CONTRACTORS INCLUDING THE INSTALLERS

Trusses require extreme care in fabricating, handling, shipping, installing and bracing. Refer to and follow the latest edition of BCSI (Building Component Safety Information, by TPI and SBCA) for safety practices prior to performing these functions. Installers shall provide temporary bracing per BCSI. Unless noted otherwise, top chord shall have properly attached structural sheathing and bottom chord shall have a properly attached rigid ceiling. Locations shown for permanent lateral restraint of webs shall have bracing installed per BCSI sections B3, B7, or B10, as applicable. Apply plates to each face of truss and position as shown above and on the Joint Details, unless noted otherwise. Refer to drawings 160A-Z for standard plate positions. Refer to job's General Notes page for additional information.

Alpine, a division of ITW Building Components Group Inc. shall not be responsible for any deviation from this drawing, any failure to build the truss in conformance with ANSI/TPI 1, or for handling, shipping, installation and bracing of trusses. A seal on this drawing or cover page listing this drawing, indicates acceptance of professional engineering responsibility solely for the design shown. The suitability and use of this drawing for any structure is the responsibility of the Building Designer per ANSI/TPI 1 Sec.2.

For more information see these web sites: Alpine: alpineitw.com; TPI: tpinst.org; SBCA: sbcindustry.com; ICC: iccsafe.org; AWC: awc.org

ALPINE
AN ITW COMPANY
6750 Forum Drive
Suite 305
Orlando FL, 32821

Gable Stud Reinforcement Detail

ASCE 7-16: 140 mph Wind Speed, 15' Mean Height, Enclosed, Exposure C, Kzt = 1.00

Or: 120 mph Wind Speed, 15' Mean Height, Partially Enclosed, Exposure C, Kzt = 1.00
Or: 120 mph Wind Speed, 15' Mean Height, Enclosed, Exposure D, Kzt = 1.00
Or: 100 mph Wind Speed, 15' Mean Height, Partially Enclosed, Exposure D, Kzt = 1.00

Max Gable Vertical Length

2x4 Gable Vertical Spacing	Species	Brace Grade	No Braces	(1) 1x4 'L' Brace * Group A	(1) 1x4 'L' Brace * Group B	(1) 2x4 'L' Brace * Group A	(1) 2x4 'L' Brace * Group B	(2) 2x4 'L' Brace ** Group A	(2) 2x4 'L' Brace ** Group B	(1) 2x6 'L' Brace * Group A	(1) 2x6 'L' Brace * Group B	(2) 2x6 'L' Brace ** Group A	(2) 2x6 'L' Brace ** Group B
24" o.c.	SPF HF	#1 / #2	4' 3"	7' 3"	7' 7"	8' 7"	8' 11"	10' 3"	10' 8"	13' 6"	14' 0"	14' 0"	14' 0"
		#3	4' 1"	6' 7"	7' 1"	8' 6"	8' 10"	10' 1"	10' 6"	13' 4"	13' 10"	14' 0"	14' 0"
		Stud	4' 1"	6' 7"	7' 0"	8' 6"	8' 10"	10' 1"	10' 6"	13' 4"	13' 10"	14' 0"	14' 0"
		Standard	4' 1"	5' 8"	6' 0"	7' 7"	8' 1"	10' 1"	10' 6"	11' 10"	12' 8"	14' 0"	14' 0"
	SP DFL	#1	4' 6"	7' 4"	7' 8"	8' 8"	9' 0"	10' 4"	10' 9"	13' 8"	14' 0"	14' 0"	14' 0"
		#2	4' 3"	7' 3"	7' 7"	8' 7"	8' 11"	10' 3"	10' 8"	13' 6"	14' 0"	14' 0"	14' 0"
		#3	4' 2"	6' 0"	6' 4"	7' 11"	8' 6"	10' 2"	10' 7"	12' 5"	13' 4"	14' 0"	14' 0"
		Stud	4' 2"	6' 0"	6' 4"	7' 11"	8' 6"	10' 2"	10' 7"	12' 5"	13' 4"	14' 0"	14' 0"
		Standard	4' 0"	5' 3"	5' 7"	7' 0"	7' 6"	9' 6"	10' 2"	11' 0"	11' 10"	14' 0"	14' 0"
16" o.c.	SPF HF	#1 / #2	4' 11"	8' 4"	8' 8"	9' 10"	10' 3"	11' 8"	12' 2"	14' 0"	14' 0"	14' 0"	14' 0"
		#3	4' 8"	8' 1"	8' 8"	9' 8"	10' 1"	11' 7"	12' 1"	14' 0"	14' 0"	14' 0"	14' 0"
		Stud	4' 8"	8' 1"	8' 6"	9' 8"	10' 1"	11' 7"	12' 1"	14' 0"	14' 0"	14' 0"	14' 0"
		Standard	4' 8"	6' 11"	7' 5"	9' 3"	9' 11"	11' 7"	12' 1"	14' 0"	14' 0"	14' 0"	14' 0"
	SP DFL	#1	5' 1"	8' 5"	8' 9"	9' 11"	10' 4"	11' 10"	12' 4"	14' 0"	14' 0"	14' 0"	14' 0"
		#2	4' 11"	8' 4"	8' 8"	9' 10"	10' 3"	11' 8"	12' 2"	14' 0"	14' 0"	14' 0"	14' 0"
		#3	4' 9"	7' 4"	7' 9"	9' 9"	10' 2"	11' 8"	12' 1"	14' 0"	14' 0"	14' 0"	14' 0"
		Stud	4' 9"	7' 4"	7' 9"	9' 9"	10' 2"	11' 8"	12' 1"	14' 0"	14' 0"	14' 0"	14' 0"
		Standard	4' 8"	6' 5"	6' 10"	8' 7"	9' 2"	11' 7"	12' 1"	13' 6"	14' 0"	14' 0"	14' 0"
12" o.c.	SPF HF	#1 / #2	5' 5"	9' 2"	9' 6"	10' 10"	11' 3"	11' 8"	13' 5"	14' 0"	14' 0"	14' 0"	14' 0"
		#3	5' 1"	9' 0"	9' 4"	10' 8"	11' 1"	12' 9"	13' 3"	14' 0"	14' 0"	14' 0"	14' 0"
		Stud	5' 1"	9' 0"	9' 4"	10' 8"	11' 1"	12' 9"	13' 3"	14' 0"	14' 0"	14' 0"	14' 0"
		Standard	5' 1"	8' 0"	8' 6"	10' 8"	11' 1"	12' 9"	13' 3"	14' 0"	14' 0"	14' 0"	14' 0"
	SP DFL	#1	5' 8"	9' 3"	9' 8"	10' 11"	11' 4"	13' 0"	13' 6"	14' 0"	14' 0"	14' 0"	14' 0"
		#2	5' 5"	9' 2"	9' 6"	10' 10"	11' 3"	12' 11"	13' 5"	14' 0"	14' 0"	14' 0"	14' 0"
		#3	5' 3"	8' 5"	9' 0"	10' 9"	11' 2"	12' 10"	13' 4"	14' 0"	14' 0"	14' 0"	14' 0"
		Stud	5' 3"	8' 5"	9' 0"	10' 9"	11' 2"	12' 10"	13' 4"	14' 0"	14' 0"	14' 0"	14' 0"
		Standard	5' 1"	7' 5"	7' 11"	9' 11"	10' 7"	12' 9"	13' 3"	14' 0"	14' 0"	14' 0"	14' 0"

Bracing Group Species and Grades:

Group A:

Spruce-Pine-Fir: #1 / #2, Standard; #3, Stud

Hem-Fir: #2, Stud; #3, Standard

Douglas Fir-Larch: #3, Stud, Standard

Southern Pine***: #3, Stud, Standard

Group B:

Hem-Fir: #1 & Btr, #1

Douglas Fir-Larch: #1, #2

Southern Pine***: #1, #2

1x4 Braces shall be SRB (Stress-Rated Board).

***For 1x4 So. Pine use only Industrial 55 or Industrial 45 Stress-Rated Boards. Group B values may be used with these grades.

Gable Truss Detail Notes:

Wind Load deflection criterion is L/240.

Provide uplift connections for 55 plf over continuous bearing (5 psf TC Dead Load).

Gable end supports load from 4' 0" outlookers with 2' 0" overhang, or 12" plywood overhang.

Attach 'L' braces with 10d (0.128"x3.0" min) nails.

* For (1) 'L' brace: space nails at 2" o.c. in 18" end zones and 4" o.c. between zones.

** For (2) 'L' braces: space nails at 3" o.c. in 18" end zones and 6" o.c. between zones.

'L' bracing must be a minimum of 80% of web member length.

Gable Vertical Plate Sizes

Vertical Length	No Splice
Less than 4' 0"	1X4 or 2X3
Greater than 4' 0"	3X4

+ Refer to common truss design for peak, splice, and heel plates.

Refer to the Building Designer for conditions not addressed by this detail.

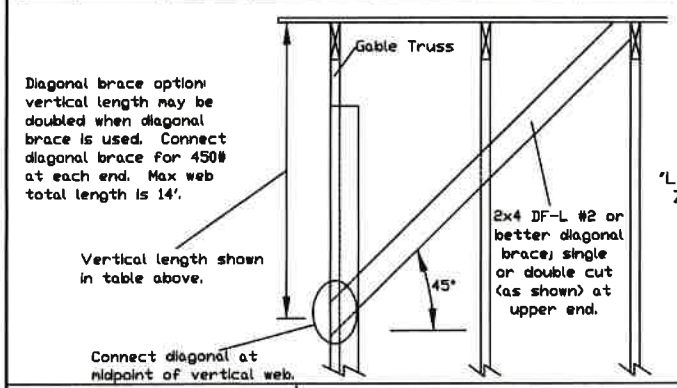

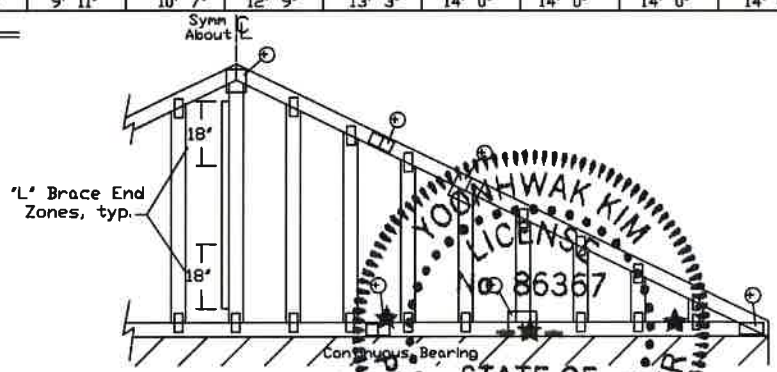

Refer to chart above for max gable vertical length.

YOONHWAK KIM LICENSE No 86367 STATE OF FLORIDA PROFESSIONAL ENGINEER

WARNING: READ AND FOLLOW ALL NOTES ON THIS DRAWING
IMPORTANT: FURNISH THIS DRAWING TO ALL CONTRACTORS INCLUDING THE INSTALLERS.

Trusses require extreme care in fabricating, handling, shipping, installing and bracing. Refer to and follow the latest edition of BCSI (Building Component Safety Information, by TPI and SBCA) for safety practices prior to performing these functions. Installers shall provide temporary bracing per BCSI. Unless noted otherwise, top chord shall have properly attached structural sheathing and bottom chord shall have a properly attached rigid ceiling. Locations shown for permanent lateral restraint of webs shall have bracing installed per BCSI sections B3, B7 or B10, as applicable. Apply plates to each face of truss and position as shown above and on the Joint Details, unless noted otherwise. Refer to drawings 160A-Z for standard plate positions.

Alpine, a division of ITW Building Components Group Inc. shall not be responsible for any deviation from this drawing, any failure to build the truss in conformance with ANSI/TPI 1, or for handling, shipping, installation & bracing of trusses.

A seal on this drawing or cover page listing this drawing, indicates acceptance of professional engineering responsibility solely for the design shown. The suitability and use of this drawing for any structure is the responsibility of the Building Designer per ANSI/TPI 1 Sec.2.

For more information see this job's general notes page and these web sites:
ALPINE: www.alpineitw.com; TPI: www.tpinst.org; SBCA: www.sbcindustry.org; ICC: www.[illegible]

FL License 278, Yoonhwak Kim, FL PE #86367

ALPINE
AN ITW COMPANY
514 Earth City Expressway
Suite 242
Earth City, MO 63045

MAX. TOT. LD. 60 PSF

MAX. SPACING 24.0"

REF	ASCE7-16-GAB14015
DATE	01/26/2018
DRWG	A14015ENC160118

Gable Detail

For Let-in Verticals

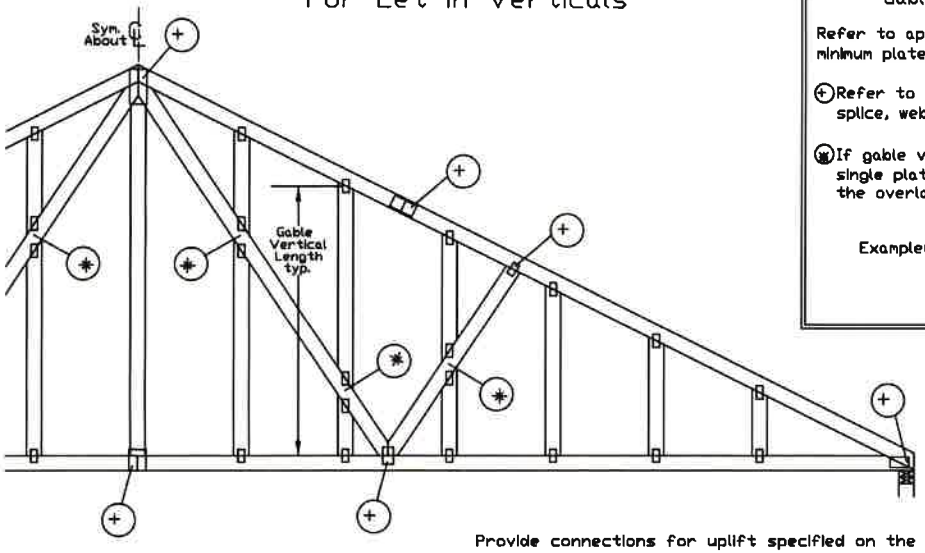

Gable Truss Plate Sizes

Refer to appropriate Alpine gable detail for minimum plate sizes for vertical studs.

(+) Refer to Engineered truss design for peak, splice, web, and heel plates.

(✱) If gable vertical plates overlap, use a single plate that covers the total area of the overlapped plates to span the web.

Example:

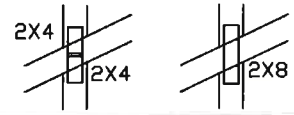

'T' Reinforcement Attachment Detail

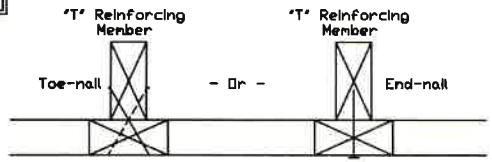

Provide connections for uplift specified on the engineered truss design.

Attach each 'T' reinforcing member with

End Driven Nails:
10d Common (0.148"x 3",min) Nails at 4" o.c. plus
(4) nails in the top and bottom chords.

Toenailed Nails:
10d Common (0.148"x3",min) Toenails at 4" o.c. plus
(4) toenails in the top and bottom chords.

This detail to be used with the appropriate Alpine gable detail for ASCE wind load.

ASCE 7-05 Gable Detail Drawings
A13015051014, A12015051014, A11015051014, A10015051014, A14015051014,
A13030051014, A12030051014, A11030051014, A10030051014, A14030051014

ASCE 7-10 & ASCE 7-16 Gable Detail Drawings
A11515ENC100118, A12015ENC100118, A14015ENC100118, A16015ENC100118,
A18015ENC100118, A20015ENC100118, A20015END100118, A20015PED100118,
A11530ENC100118, A12030ENC100118, A14030ENC100118, A16030ENC100118,
A18030ENC100118, A20030ENC100118, A20030END100118, A20030PED100118,
S11515ENC100118, S12015ENC100118, S14015ENC100118, S16015ENC100118,
S18015ENC100118, S20015ENC100118, S20015END100118, S20015PED100118,
S11530ENC100118, S12030ENC100118, S14030ENC100118, S16030ENC100118,
S18030ENC100118, S20030ENC100118, S20030END100118, S20030PED100118

See appropriate Alpine gable detail for maximum unreinforced gable vertical length.

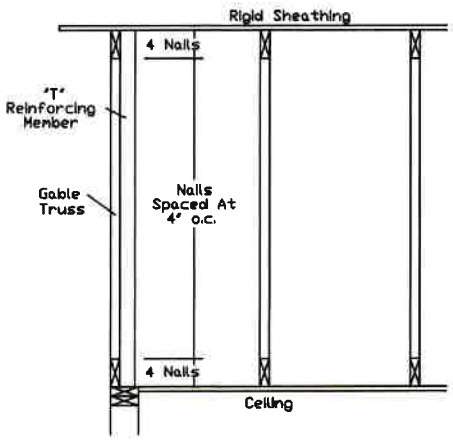

To convert from 'L' to 'T' reinforcing members, multiply 'T' increase by length (based on appropriate Alpine gable detail).

Maximum allowable 'T' reinforced gable vertical length is 14' from top to bottom chord.

'T' reinforcing member material must match size, specie, and grade of the 'L' reinforcing member.

Web Length Increase w/ 'T' Brace

'T' Reinf. Mbr. Size	'T' Increase
2x4	30 %
2x6	20 %

Example:
ASCE 7-10 Wind Speed = 120 mph
Mean Roof Height = 30 ft, Kzt = 1.00
Gable Vertical = 24"o.c. SP #3
'T' Reinforcing Member Size = 2x4
'T' Brace Increase (From Above) = 30% = 1.30
(1) 2x4 'L' Brace Length = 8' 7"
Maximum 'T' Reinforced Gable Vertical Length
1.30 x 8' 7" = 11' 2"

YOONHWAK KIM
No. 86367
STATE OF FLORIDA
PROFESSIONAL ENGINEER

ALPINE
AN ITW COMPANY
514 Earth City Expressway
Suite 242
Earth City, MO 63045

WARNING READ AND FOLLOW ALL NOTES ON THIS DRAWING
IMPORTANT FURNISH THIS DRAWING TO ALL CONTRACTORS INCLUDING THE INSTALLERS.

Trusses require extreme care in fabricating, handling, shipping, installing and bracing. Refer to and follow the latest edition of BCSI (Building Component Safety Information, by TPI and SBCA) for safety practices prior to performing these functions. Installers shall provide temporary bracing per BCSI. Unless noted otherwise, top chord shall have properly attached structural sheathing and bottom chord shall have a properly attached rigid ceiling. Locations shown for permanent lateral restraint of webs shall have bracing installed per BCSI sections B3, B7 or B10, as applicable. Apply plates to each face of truss and position as shown above and on the Joint Details, unless noted otherwise. Refer to drawings 160A-Z for standard plate positions.

Alpine, a division of ITW Building Components Group Inc. shall not be responsible for any deviation from this drawing, any failure to build the truss in conformance with ANSI/TPI 1, or for handling, shipping, installation & bracing of trusses.

A seal on this drawing or cover page listing this drawing, indicates acceptance of professional engineering responsibility solely for the design shown. The suitability and use of this drawing for any structure is the responsibility of the Building Designer per ANSI/TPI 1 Sec.2.

For more information see this job's general notes page and these web sites:
ALPINE: www.alpineitw.com; TPI: www.tpinst.org; SBCA: www.sbcindustry.org; ICC: www.iccsafe.org

10/2021
278, Yoonhwak Kim, FL PE #86367

MAX. TOT. LD.	60 PSF
DUR. FAC.	ANY
MAX. SPACING	24.0"

REF	LET-IN VERT
DATE	01/02/2018
DRWG	GBLLETIN0118

Piggyback Detail - ASCE 7-16: 160 mph, 30' Mean Height, Enclosed, Exposure C, Kzt=1.00

160 mph Wind, 30.00 ft Mean Hgt, ASCE 7-16, Enclosed Bldg. located anywhere in roof, Exp C, Wind DL= 5.0 psf (min), Kzt=1.0.
Or 140 mph wind, 30.00 ft Mean Hgt, ASCE 7-16, Enclosed Bldg. located anywhere in roof, Exp D, wind DL= 5.0 psf (min), Kzt=1.0.

Note: Top chords of trusses supporting piggyback cap trusses must be adequately braced by sheathing or purlins. The building Engineer of Record shall provide diagonal bracing or any other suitable anchorage to permanently restrain purlins, and lateral bracing for out of plane loads over gable ends.

Maximum truss spacing is 24" o.c. detail is not applicable if cap supports additional loads such as cupola, steeple, chimney or drag strut loads.

** Refer to Engineer's sealed truss design drawing for piggyback and base truss specifications.

Detail A : Purlin Spacing = 24" o.c. or less

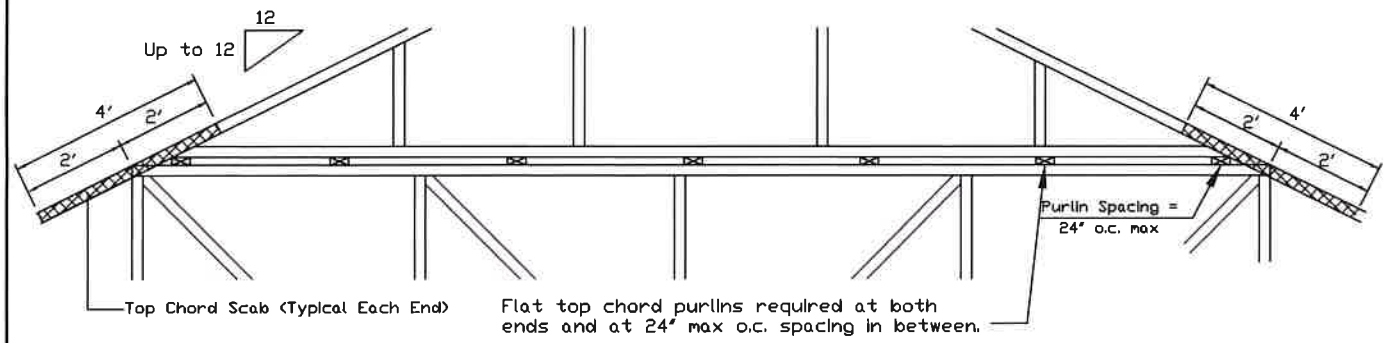

Piggyback cap truss slant nailed to all top chord purlin bracing with (2) 16d box nails (0.135"x3.5") and secure top chord with 2x4 #3 grade scab (1 side only at each end) attached with 2 rows of 10d box nails (0.128"x3") at 4" o.c.

Attach purlin bracing to the flat top chord using (2) 16d box nails (0.135"x3.5").

The top chord #3 grade 2x4 scab may be replaced with either of the following: (1) 3X8 Trulox plate attached with (8) 0.120"x1.375" nails, (4) into cap TC & (4) into base truss TC or (1) 28PB wave piggyback plate plated to the piggyback truss TC and attached to the base truss TC with (4) 0.120"x1.375" nails. Note: Nailing thru holes of wave plate is acceptable.

Detail B : Purlin Spacing > 24" o.c.

Piggyback cap truss slant nailed to all top chord purlin bracing with (2) 16d box nails (0.135"x3.5") and secure top chord with 2x4 #3 grade scab (1 side only at each end) attached with 2 rows of 10d box nails (0.128"x3") at 4" o.c.

Attach purlin bracing to the flat top chord using a minimum of (2) 16d box nails (0.135"x3.5").

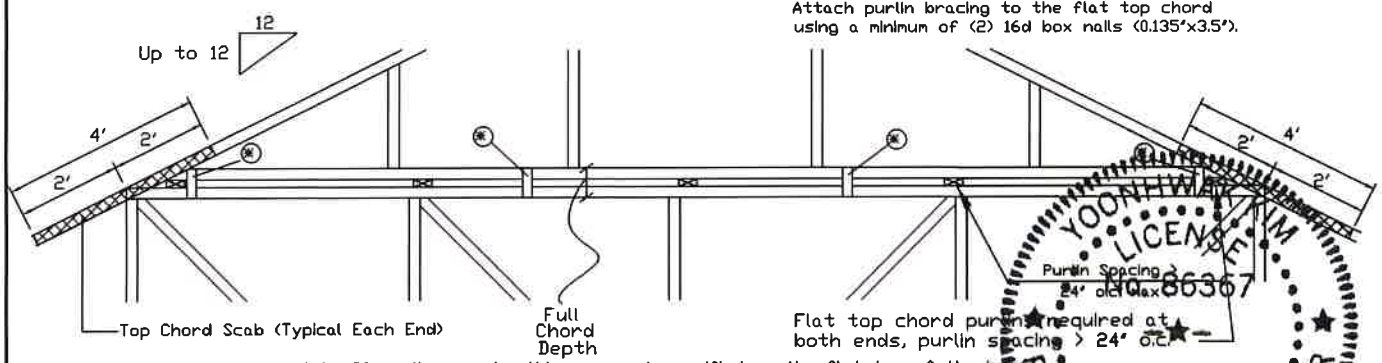

Note: If purlins or sheathing are not specified on the flat top of the base truss, purlins must be installed at 24" o.c. max. and use Detail A.

* In addition, provide connection with one of the following methods:

Trulox
Use 3X8 Trulox plates for 2x4 chord member, and 3X10 Trulox plates for 2x6 and larger chord members. Attach to each face @ 8" o.c. with (4) 0.120"x1.375" nails into cap bottom chord and (4) in base truss top chord. Trulox plates may be staggered 4" o.c. front to back faces.

APA Rated Gusset
8"x8"x7/16" (min) APA rated sheathing gussets (each face). Attach @ 8" o.c. with (8) 6d common (0.113"x2") nails per gusset, (4) in cap bottom chord and (4) in base truss top chord. Gussets may be staggered 4" o.c. front to back faces.

2x4 Vertical Scabs
2x4 SPF #2, full chord depth scabs (each face). Attach @ 8" o.c. with (6) 10d box nails (0.128"x3") per scab, (3) in cap bottom chord and (3) in base truss top chord. Scabs may be staggered 4" o.c. front to back faces.

28PB Wave Piggyback Plate
One 28PB wave piggyback plate to each face @ 8" o.c. Attach teeth to piggyback at time of fabrication. Attach to supporting truss with (4) 0.120"x1.375" nails per face per ply. Piggyback plates may be staggered 4" o.c. front to back faces.

YOONHWAN KIM LICENSE No. 86367 STATE OF FLORIDA PROFESSIONAL ENGINEER

ALPINE AN ITW COMPANY
13723 Riverport Drive
Suite 200
Maryland Heights, MO 63043

WARNING READ AND FOLLOW ALL NOTES ON THIS DRAWING
IMPORTANT FURNISH THIS DRAWING TO ALL CONTRACTORS INCLUDING THE INSTALLERS.

Trusses require extreme care in fabricating, handling, shipping, installing and bracing. Refer to and follow the latest edition of BCSI (Building Component Safety Information, by TPI and SBCA) for safety practices prior to performing these functions. Installers shall provide temporary bracing per BCSI. Unless noted otherwise, top chord shall have properly attached structural sheathing and bottom chord shall have a properly attached rigid ceiling. Locations shown for permanent lateral restraint of webs shall have bracing installed per BCSI sections B3, B7 or B10, as applicable. Apply plates to each face of truss and position as shown above and on the Joint Details, unless noted otherwise. Refer to drawings 160A-Z for standard plate positions.

Alpine, a division of ITW Building Components Group Inc. shall not be responsible for any deviation from this drawing, any failure to build the truss in conformance with ANSI/TPI 1, or for handling, shipping, installation & bracing of trusses.

A seal on this drawing or cover page listing this drawing, indicates acceptance of professional engineering responsibility solely for the design shown. The suitability and use of this drawing for any structure is the responsibility of the Building Designer per ANSI/TPI 1 Sec.2.

For more information see this job's general notes page and these web sites: ALPINE: www.alpineitw.com; TPI: www.tpinst.org; SBCA: www.sbcindustry.org; ICC: www.iccsafe.org

06/30/2021

FL Lic# 278, Yoonhwak Kim, FL PE #86367

REF	PIGGYBACK
DATE	01/02/2018
DRWG	PB160160118
SPACING	24.0"

CLR Reinforcing Member Substitution

This detail is to be used when a Continuous Lateral Restraint (CLR) is specified on a truss design but an alternative web reinforcement method is desired.

Notes:

This detail is only applicable for changing the specified CLR shown on single ply sealed designs to T-reinforcement or L-reinforcement or scab reinforcement.

Alternative reinforcement specified in chart below may be conservative. For minimum alternative reinforcement, re-run design with appropriate reinforcement type.

Use scabs instead of L- or T- reinforcement on webs with intersecting truss joints, such as K-web joints, that may interfere with proper application along the narrow face of the web.

Web Member Size	Specified CLR Restraint	Alternative Reinforcement T- or L- Reinf.	Alternative Reinforcement Scab Reinf.
2x3 or 2x4	1 row	2x4	1-2x4
2x3 or 2x4	2 rows	2x6	2-2x4
2x6	1 row	2x4	1-2x6
2x6	2 rows	2x6	2-2x4(*)
2x8	1 row	2x6	1-2x8
2x8	2 rows	2x6	2-2x6(*)

T-reinforcement, L-reinforcement, or scab reinforcement to be same species and grade or better than web member unless specified otherwise on Engineer's sealed design.

(*) Center scab on wide face of web. Apply (1) scab to each face of web.

T-Reinforcement or L-Reinforcement:

Apply to either side of web narrow face. Attach with 10d (0.128"x3.0",min) nails at 6" o.c. Reinforcing member is a minimum 80% of web member length.

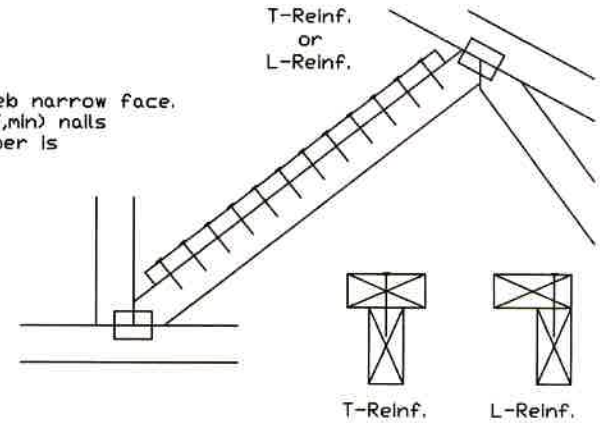

Scab Reinforcement:

Apply scab(s) to wide face of web. No more than (1) scab per face. Attach with 10d (0.128"x3.0",min) nails at 6" o.c. Reinforcing member is a minimum 80% of web member length.

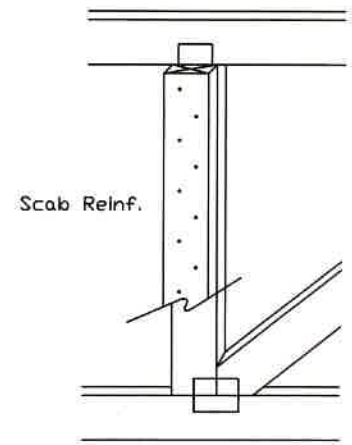

YOONHWAK KIM
LICENSE
No. 86367
STATE OF FLORIDA
PROFESSIONAL ENGINEER

ALPINE
AN ITW COMPANY
514 Earth City Expressway
Suite 242
Earth City, MO 63045

WARNING READ AND FOLLOW ALL NOTES ON THIS DRAWING
IMPORTANT FURNISH THIS DRAWING TO ALL CONTRACTORS INCLUDING THE INSTALLERS.

Trusses require extreme care in fabricating, handling, shipping, installing and bracing. Refer to and follow the latest edition of BCSI (Building Component Safety Information, by TPI and SBCA) for safety practices prior to performing these functions. Installers shall provide temporary bracing per BCSI. Unless noted otherwise, top chord shall have properly attached structural sheathing and bottom chord shall have a properly attached rigid ceiling. Locations shown for permanent lateral restraint of webs shall have bracing installed per BCSI sections B3, B7 or B10, as applicable. Apply plates to each face of truss and position as shown above and on the Joint Details, unless noted otherwise. Refer to drawings 160A-Z for standard plate positions.

Alpine, a division of ITW Building Components Group Inc. shall not be responsible for any deviation from this drawing, any failure to build the truss in conformance with ANSI/TPI 1, or for handling, shipping, installation & bracing of trusses.

A seal on this drawing or cover page listing this drawing, indicates acceptance of professional engineering responsibility solely for the design shown. The suitability and use of this drawing for any structure is the responsibility of the Building Designer per ANSI/TPI 1 Sec.2.

For more information see this job's general notes page and these web sites: ALPINE: www.alpineitw.com; TPI: www.tpinst.org; SBCA: www.sbcindustry.org; ICC: www.iccsafe.org

TC LL	PSF	REF	CLR Subst.
TC DL	PSF	DATE	01/02/19
BC DL	PSF	DRWG	BRCLBSUB0119
BC LL	PSF		
TOT. LD.	PSF		
DUR. FAC.			
SPACING			

Exp. 03/30/2021
Cert # 278, Yoonhwak Kim, FL PE #86367

Gable Stud Reinforcement Detail

ASCE 7-16: 140 mph Wind Speed, 30' Mean Height, Enclosed, Exposure C, Kzt = 1.00

Or: 120 mph Wind Speed, 30' Mean Height, Partially Enclosed, Exposure C, Kzt = 1.00
Or: 120 mph Wind Speed, 30' Mean Height, Enclosed, Exposure D, Kzt = 1.00
Or: 100 mph wind speed, 30' Mean Height, Partially Enclosed, Exposure D, Kzt = 1.00

Max Gable Vertical Length

2x4 Gable Vertical Spacing	Species	Brace Grade	No Braces	(1) 1x4 'L' Brace *		(1) 2x4 'L' Brace *		(2) 2x4 'L' Brace **		(1) 2x6 'L' Brace *		(2) 2x6 'L' Brace **	
				Group A	Group B	Group A	Group B	Group A	Group B	Group A	Group B	Group A	Group B
24" o.c.	SPF HF	#1 / #2	4' 1"	6' 11"	7' 2"	8' 2"	8' 6"	9' 9"	10' 2"	12' 10"	13' 4"	14' 0"	14' 0"
		#3	3' 10"	6' 2"	6' 7"	8' 1"	8' 5"	9' 8"	10' 0"	12' 8"	13' 2"	14' 0"	14' 0"
		Stud	3' 10"	6' 2"	6' 6"	8' 1"	8' 5"	9' 8"	10' 0"	12' 8"	13' 2"	14' 0"	14' 0"
		Standard	3' 10"	5' 3"	5' 7"	7' 0"	7' 6"	9' 6"	10' 0"	11' 0"	11' 10"	14' 0"	14' 0"
	SP DFL	#1	4' 2"	7' 0"	7' 3"	8' 3"	8' 7"	9' 10"	10' 3"	13' 0"	13' 6"	14' 0"	14' 0"
		#2	4' 1"	6' 11"	7' 2"	8' 2"	8' 6"	9' 9"	10' 2"	12' 10"	13' 4"	14' 0"	14' 0"
		#3	4' 0"	5' 7"	5' 11"	7' 5"	7' 11"	9' 8"	10' 1"	11' 7"	12' 5"	14' 0"	14' 0"
		Stud	4' 0"	5' 7"	5' 11"	7' 5"	7' 11"	9' 8"	10' 1"	11' 7"	12' 5"	14' 0"	14' 0"
		Standard	3' 9"	4' 11"	5' 13"	6' 6"	7' 0"	8' 10"	9' 6"	10' 3"	11' 0"	13' 11"	14' 0"
16" o.c.	SPF HF	#1 / #2	4' 8"	7' 11"	8' 3"	9' 4"	9' 9"	11' 2"	11' 7"	14' 0"	14' 0"	14' 0"	14' 0"
		#3	4' 5"	7' 6"	8' 3"	9' 3"	9' 7"	11' 0"	11' 6"	14' 0"	14' 0"	14' 0"	14' 0"
		Stud	4' 5"	7' 6"	8' 0"	9' 3"	9' 7"	11' 0"	11' 6"	14' 0"	14' 0"	14' 0"	14' 0"
		Standard	4' 5"	6' 5"	6' 10"	8' 7"	9' 2"	11' 0"	11' 6"	13' 6"	14' 0"	14' 0"	14' 0"
	SP DFL	#1	4' 10"	8' 0"	8' 4"	9' 6"	9' 10"	11' 3"	11' 9"	14' 0"	14' 0"	14' 0"	14' 0"
		#2	4' 8"	7' 11"	8' 3"	9' 4"	9' 9"	11' 2"	11' 7"	14' 0"	14' 0"	14' 0"	14' 0"
		#3	4' 7"	6' 10"	7' 3"	9' 1"	9' 8"	11' 1"	11' 6"	14' 0"	14' 0"	14' 0"	14' 0"
		Stud	4' 7"	6' 10"	7' 3"	9' 1"	9' 8"	11' 1"	11' 6"	14' 0"	14' 0"	14' 0"	14' 0"
		Standard	4' 5"	6' 0"	6' 5"	8' 0"	8' 7"	10' 10"	11' 6"	12' 7"	13' 15"	14' 0"	14' 0"
12" o.c.	SPF HF	#1 / #2	5' 2"	8' 9"	9' 1"	10' 4"	10' 9"	11' 2"	12' 9"	14' 0"	14' 0"	14' 0"	14' 0"
		#3	4' 10"	8' 7"	8' 11"	10' 2"	10' 7"	12' 2"	12' 8"	14' 0"	14' 0"	14' 0"	14' 0"
		Stud	4' 10"	8' 7"	8' 11"	10' 2"	10' 7"	12' 2"	12' 8"	14' 0"	14' 0"	14' 0"	14' 0"
		Standard	4' 10"	7' 5"	7' 11"	9' 11"	10' 7"	12' 2"	12' 8"	14' 0"	14' 0"	14' 0"	14' 0"
	SP DFL	#1	5' 4"	8' 10"	9' 2"	10' 5"	10' 10"	12' 5"	12' 11"	14' 0"	14' 0"	14' 0"	14' 0"
		#2	5' 2"	8' 9"	9' 1"	10' 4"	10' 9"	12' 3"	12' 9"	14' 0"	14' 0"	14' 0"	14' 0"
		#3	5' 0"	7' 10"	8' 4"	10' 3"	10' 8"	12' 2"	12' 8"	14' 0"	14' 0"	14' 0"	14' 0"
		Stud	5' 0"	7' 10"	8' 4"	10' 3"	10' 8"	12' 2"	12' 8"	14' 0"	14' 0"	14' 0"	14' 0"
		Standard	4' 10"	6' 11"	7' 4"	9' 3"	9' 10"	12' 2"	12' 8"	14' 0"	14' 0"	14' 0"	14' 0"

Bracing Group Species and Grades:

Group A:

Spruce-Pine-Fir: #1 / #2 — Standard; #3 — Stud

Hem-Fir: #2 — Stud; #3 — Standard

Douglas Fir-Larch: #3 — Stud — Standard

Southern Pine***: #3 — Stud — Standard

Group B:

Hem-Fir: #1 & Btr — #1

Douglas Fir-Larch: #1 — #2

Southern Pine***: #1 — #2

1x4 Braces shall be SRB (Stress-Rated Board).

***For 1x4 So. Pine use only Industrial 55 or Industrial 45 Stress-Rated Boards. Group B values may be used with these grades.

Gable Truss Detail Notes:

Wind Load deflection criterion is L/240.

Provide uplift connections for 100 plf over continuous bearing (5 psf TC Dead Load).

Gable end supports load from 4' 0" outlookers with 2' 0" overhang, or 12" plywood overhang.

Attach 'L' braces with 10d (0.128"x3.0" min) nails.

* For (1) 'L' brace: space nails at 2" o.c. in 18" end zones and 4" o.c. between zones.

** For (2) 'L' braces: space nails at 3" o.c. in 18" end zones and 6" o.c. between zones.

'L' bracing must be a minimum of 80% of web member length.

Gable Vertical Plate Sizes	
Vertical Length	No Splice
Less than 4' 0"	2X4
Greater than 4' 0", but less than 11' 6"	3X4
Greater than 11' 6"	4X4

+ Refer to common truss design for peak, splice, and heel plates.

Refer to the Building Designer for conditions not addressed by this detail.

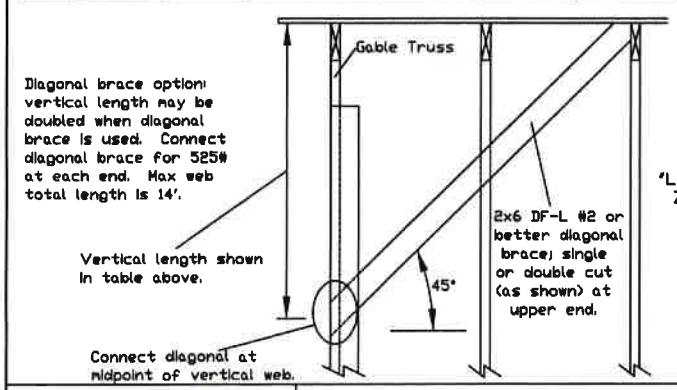

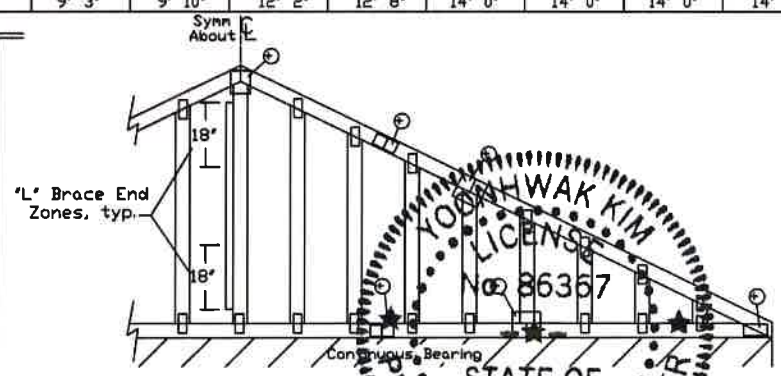

Refer to chart above for max gable vertical length.

YOONHWAK KIM LICENSE No 86367 STATE OF FLORIDA PROFESSIONAL ENGINEER

WARNING READ AND FOLLOW ALL NOTES ON THIS DRAWING
IMPORTANT FURNISH THIS DRAWING TO ALL CONTRACTORS INCLUDING THE INSTALLERS.

Trusses require extreme care in fabricating, handling, shipping, installing and bracing. Refer to and follow the latest edition of BCSI (Building Component Safety Information, by TPI and SBCA) for safety practices prior to performing these functions. Installers shall provide temporary bracing per BCSI. Unless noted otherwise, top chord shall have properly attached structural sheathing and bottom chord shall have a properly attached rigid ceiling. Locations shown for permanent lateral restraint of webs shall have bracing installed per BCSI sections B3, B7 or B10, as applicable. Apply plates to each face of truss and position as shown above and on the Joint Details, unless noted otherwise. Refer to drawings 160A-Z for standard plate positions.

Alpine, a division of ITW Building Components Group Inc. shall not be responsible for any deviation from this drawing, any failure to build the truss in conformance with ANSI/TPI 1, or for handling, shipping, installation & bracing of trusses.

A seal on this drawing or cover page listing this drawing, indicates acceptance of professional engineering responsibility solely for the design shown. The suitability and use of this drawing for any structure is the responsibility of the Building Designer per ANSI/TPI 1 Sec.2.

For more information see this job's general notes page and these web sites: ALPINE: www.alpineitw.com; TPI: www.tpinst.org; SBCA: www.sbcindustry.org; ICC: www.iccsafe.org

ALPINE AN ITW COMPANY
514 Earth City Expressway
Suite 242
Earth City, MO 63045

06/30/2021 # 278, Yoonhwak Kim, FL PE #86367

REF	ASCE7-16-GAB14030
DATE	01/26/2018
DRWG	A14030ENC160118

MAX. TOT. LD. 60 PSF

MAX. SPACING 24.0"

Valley Detail - ASCE 7-16: 180 mph, 30' Mean Height, Partially Enclosed, Exp. C, Kzt=1.00

Top Chord 2x4 SP #2N, SPF #1/#2, DF-L #2 or better.
Bot Chord 2x4 SP #2N or SPF #1/#2 or better.
Webs 2x4 SP #3, SPF #1/#2, DF-L #2 or better.

** Attach each valley to every supporting truss with:
535# connection or with (1) Simpson H2.5A or equivalent connector for
ASCE 7-16 180 mph. 30' Mean Height, Part. Enc. Building, Exp. C, Wind TC DL=5 psf, Kzt = 1.00
Or
ASCE 7-16 160 mph. 30' Mean Height, Part. Enc. Building, Exp. D, Wind TC DL=5 psf, Kzt = 1.00

Bottom chord may be square or pitched cut as shown.

Valleys short enough to be cut as solid triangular members from a single 2x6, or larger as required, shall be permitted in lieu of fabricating from separate 2x4 members.

All plates shown are Alpine Wave Plates.

Unless specified otherwise on engineer's sealed design, for vertical valley webs taller than 7-9" apply 2x4 "T" reinforcement, 80% length of web, same species and grade or better, attached with 10d box (0.128" x 3.0") nails at 6" o.c. In lieu of "T" reinforcement, 2x4 Continuous Lateral Restraint applied at mid-length of web is permitted with diagonal bracing as shown in DRWG BRCLBANC1014.

Top chord of truss beneath valley set must be braced with:
properly attached, rated sheathing applied prior to valley truss installation.
Or
Purlins at 24" o.c. or as otherwise specified on engineer's sealed design
Or
By valley trusses used in lieu of purlin spacing as specified on Engineer's sealed design.

*** Note that the purlin spacing for bracing the top chord of the truss beneath the valley is measured along the slope of the top chord.

++ Larger spans may be built as long as the vertical height does not exceed 14'-0".

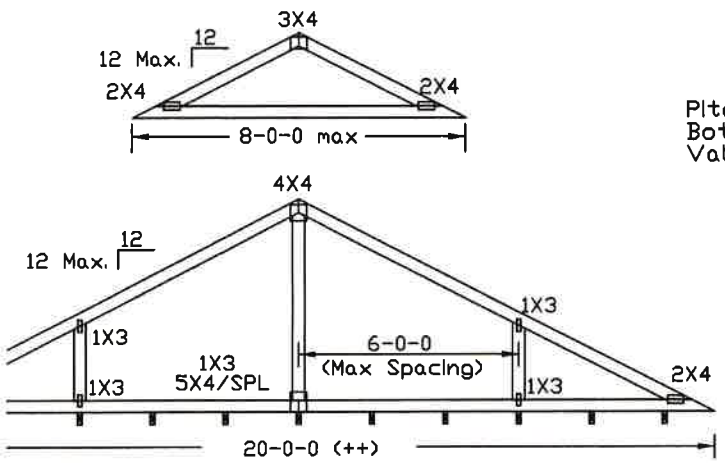

Supporting trusses at 24" o.c. maximum spacing.

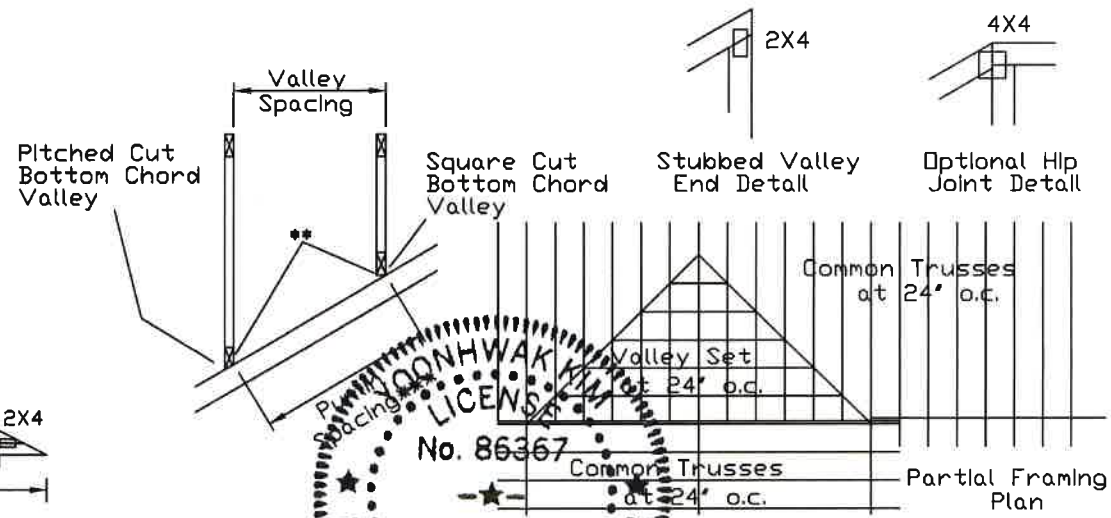

YOONHWAK KIM LICENSE No. 86367 STATE OF FLORIDA PROFESSIONAL ENGINEER

ALPINE AN ITW COMPANY
514 Earth City Expressway
Suite 242
Earth City, MO 63045

WARNING READ AND FOLLOW ALL NOTES ON THIS DRAWING
IMPORTANT FURNISH THIS DRAWING TO ALL CONTRACTORS INCLUDING THE INSTALLERS.

Trusses require extreme care in fabricating, handling, shipping, installing and bracing. Refer to and follow the latest edition of BCSI (Building Component Safety Information, by TPI and SBCA) for safety practices prior to performing these functions. Installers shall provide temporary bracing per BCSI. Unless noted otherwise, top chord shall have properly attached structural sheathing and bottom chord shall have a properly attached rigid ceiling. Locations shown for permanent lateral restraint of webs shall have bracing installed per BCSI sections B3, B7 or B10, as applicable. Apply plates to each face of truss and position as shown above and on the Joint Details, unless noted otherwise. Refer to drawings 160A-Z for standard plate positions.

Alpine, a division of ITW Building Components Group Inc. shall not be responsible for any deviation from this drawing, any failure to build the truss in conformance with ANSI/TPI 1, or for handling, shipping, installation & bracing of trusses.

A seal on this drawing or cover page listing this drawing, indicates acceptance of professional engineering responsibility solely for the design shown. The suitability and use of this drawing for any structure is the responsibility of the Building Designer per ANSI/TPI 1 Sec.2.

For more information see this Job's general notes page and these web sites: ALPINE: www.alpineitw.com; TPI: www.tpinst.org; SBCA: www.sbcindustry.org; ICC: www.iccsafe.org

06/30/2021
FL REG# 278, Yoonhwak Kim, FL PE #86367

TC LL	30	30	40PSF	
TC DL	20	15	7PSF	
BC DL	10	10	10 PSF	
BC LL	0	0	0PSF	
TOT. LD.	60	55	57PSF	
DUR.FAC.	1.25/1.33	1.15	1.15	
SPACING		24.0"		

REF	VALLEY DETAIL
DATE	01/26/2018
DRWG	VAL180160118

Valley Detail - ASCE 7-16: 30' Mean Height, Enclosed, Exp. C, Kzt=1.00

Top Chord 2x4 SP #2N, SPF #1/#2, DF-L #2 or better.
Bot Chord 2x4 SP #2N or SPF #1/#2 or better.
Webs 2x4 SP #3, SPF #1/#2, DF-L #2 or better.

** Attach each valley to every supporting truss with:
(2) 16d box (0.135" x 3.5") nails toe-nailed for ASCE 7-16, 30' Mean Height, Enclosed Building, Exp. C, Wind TC DL=5 psf, Kzt = 1.00, Max. Wind Speed based on supporting truss material at connection location:
170 mph for SP (G = 0.55, min.),
155 mph for DF-L (G = 0.50, min.), or
120 mph for HF & SPF (G = 0.42, min.).

Maximum top chord pitch is 10/12 for supporting trusses below valley trusses.

Bottom chord of valley trusses may be square or pitched cut as shown.

Valleys short enough to be cut as solid triangular members from a single 2x6, or larger as required, shall be permitted in lieu of fabricating from separate 2x4 members.

All plates shown are Alpine Wave Plates.

Unless specified otherwise on engineer's sealed design, for vertical valley webs taller than 7-9" apply 2x4 "T" reinforcement, 80% length of web, same species and grade or better, attached with 10d box (0.128" x 3.0") nails at 6" o.c. In lieu of "T" reinforcement, 2x4 Continuous Lateral Restraint applied at mid-length of web is permitted with diagonal bracing as shown in DRWG BRCLBANC1014.

Top chord of truss beneath valley set must be braced with:
properly attached, rated sheathing applied prior to valley truss installation.
Or
Purlins at 24" o.c. or as otherwise specified on engineer's sealed design
Or
By valley trusses used in lieu of purlin spacing as specified on Engineer's sealed design.

*** Note that the purlin spacing for bracing the top chord of the truss beneath the valley is measured along the slope of the top chord.

++ Larger spans may be built as long as the vertical height does not exceed 14'-0".

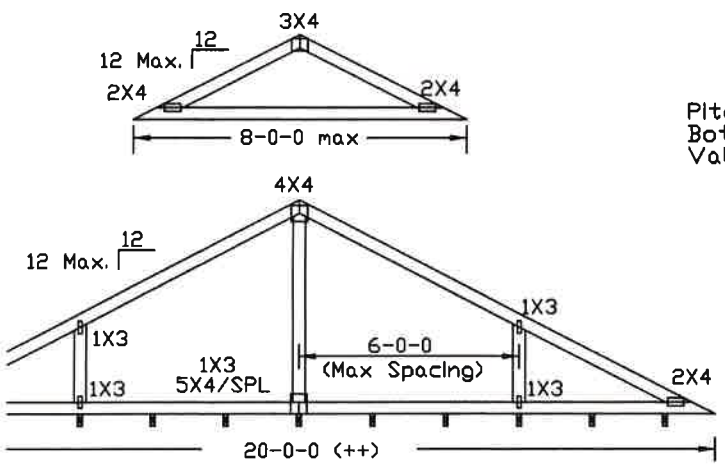

Supporting trusses at 24" o.c. maximum spacing.

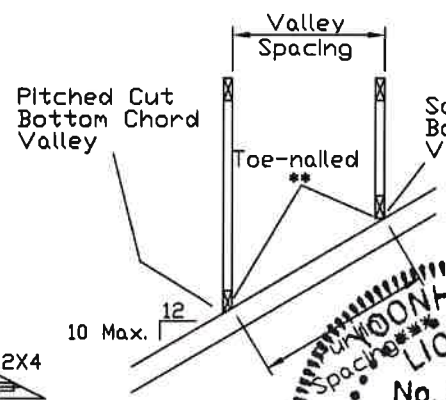

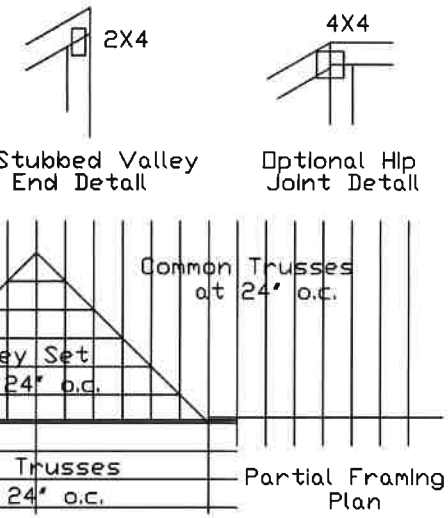

YOONHWAK KIM
LICENSE
No. 86367
STATE OF FLORIDA
PROFESSIONAL ENGINEER

ALPINE
AN ITW COMPANY
514 Earth City Expressway
Suite 242
Earth City, MO 63045

WARNING READ AND FOLLOW ALL NOTES ON THIS DRAWING
IMPORTANT FURNISH THIS DRAWING TO ALL CONTRACTORS INCLUDING THE INSTALLERS.

Trusses require extreme care in fabricating, handling, shipping, installing and bracing. Refer to and follow the latest edition of BCSI (Building Component Safety Information, by TPI and SBCA) for safety practices prior to performing these functions. Installers shall provide temporary bracing per BCSI. Unless noted otherwise, top chord shall have properly attached structural sheathing and bottom chord shall have a properly attached rigid ceiling. Locations shown for permanent lateral restraint of webs shall have bracing installed per BCSI sections B3, B7 or B10, as applicable. Apply plates to each face of truss and position as shown above and on the Joint Details, unless noted otherwise. Refer to drawings 160A-Z for standard plate positions.

Alpine, a division of ITW Building Components Group Inc. shall not be responsible for any deviation from this drawing, any failure to build the truss in conformance with ANSI/TPI 1, or for handling, shipping, installation & bracing of trusses.

A seal on this drawing or cover page listing this drawing, indicates acceptance of professional engineering responsibility solely for the design shown. The suitability and use of this drawing for any structure is the responsibility of the Building Designer per ANSI/TPI 1 Sec.2.

For more information see this job's general notes page and these web sites:
ALPINE: www.alpineitw.com; TPI: www.tpinst.org; SBCA: www.sbcindustry.org; ICC: www.iccsafe.org

TC LL	30	30	40	PSF
TC DL	20	15	7	PSF
BC DL	10	10	10	PSF
BC LL	0	0	0	PSF
TOT. LD.	60	55	57	PSF
DUR.FAC.	1.25/1.33	1.15	1.15	
SPACING		24.0"		

REF	VALLEY DETAIL
DATE	01/26/2018
DRWG	VALTN160118

PE REG# 278, Yoonhwak Kim, FL PE #86367

****
COMMUNICATION MANAGEMENT REPORT TX/RX
****

ST. TIME	DESTINATION ADDRESS	DESTINATION ID	JOB NO.	COMM. MODE		PGS.	RESULT	
06/10 14:38	RDH-XEON SondraScan	Sondra's Lenovo	2599	TX	SMB	5	OK	00'07
06/10 15:02	Cami-Laptop Scan	Cami's Folder	2600	TX	SMB	2	OK	00'04
06/10 15:04	sondra-lenovo Scan	Sondra's Folder	2601	TX	SMB	0	NG	00'12 #751
06/10 15:17	RDH-XEON SondraScan	Sondra's Lenovo	2602	TX	SMB	10	OK	00'13
06/10 15:36	Cami-Laptop Scan	Cami's Folder	2603	TX	SMB	2	OK	00'05
06/10 15:52	Cami-Laptop Scan	Cami's Folder	2604	TX	SMB	3	OK	00'04
06/10 15:52	Cami-Laptop Scan	Cami's Folder	2605	TX	SMB	2	OK	00'04
06/11 05:58	DANIEL-DESKTOP Scan	Daniel's Folder	2606	TX	SMB	5	OK	00'08
06/11 05:59	DANIEL-DESKTOP Scan	Daniel's Folder	2607	TX	SMB	5	OK	00'07
06/11 06:14	DANIEL-DESKTOP Scan	Daniel's Folder	2608	TX	SMB	6	OK	00'07
06/11 08:33	Cami-Laptop Scan	Cami's Folder	2609	TX	SMB	1	OK	00'04
06/11 09:21	Cami-Laptop Scan	Cami's Folder	2610	TX	SMB	2	OK	00'05
06/11 10:01	DANIEL-DESKTOP Scan	Daniel's Folder	2611	TX	SMB	2	OK	00'04
06/11 10:17	DANIEL-DESKTOP Scan	Daniel's Folder	2612	TX	SMB	1	OK	00'04
06/11 10:25	DANIEL-DESKTOP Scan	Daniel's Folder	2613	TX	SMB	7	OK	00'10
06/11 10:40	DANIEL-DESKTOP Scan	Daniel's Folder	2614	TX	SMB	1	OK	00'03
06/11 12:09	RDH-XEON SondraScan	Sondra's Lenovo	2615	TX	SMB	2	OK	00'04
06/14 06:49	DANIEL-DESKTOP Scan	Daniel's Folder	2616	TX	SMB	1	OK	00'03
06/14 06:55	DANIEL-DESKTOP Scan	Daniel's Folder	2617	TX	SMB	1	OK	00'03
06/14 10:06	Cami-Laptop Scan	Cami's Folder	2618	TX	SMB	1	OK	00'04
06/14 10:07	Cami-Laptop Scan	Cami's Folder	2619	TX	SMB	9	OK	00'14
06/14 10:24	Cami-Laptop Scan	Cami's Folder	2620	TX	SMB	1	OK	00'04
06/14 10:24	Cami-Laptop Scan	Cami's Folder	2621	TX	SMB	3	OK	00'02
06/14 10:25	Cami-Laptop Scan	Cami's Folder	2622	TX	SMB	1	OK	00'03
06/14 11:33	DANIEL-DESKTOP Scan	Daniel's Folder	2623	TX	SMB	4	OK	00'05
06/14 12:54	Cami-Laptop Scan	Cami's Folder	2624	TX	SMB	6	OK	00'07
06/14 13:24	RDH-XEON SondraScan	Sondra's Lenovo	2625	TX	SMB	9	OK	00'14
06/14 13:32	Cami-Laptop	Cami's Folder	2626	TX	SMB	2	OK	00'03

06/14 13:32	Scan Cami-Laptop	Cami's Folder	2627	TX	SMB	1	OK	00'01
06/15 07:46	Scan Cami-Laptop	Cami's Folder	2628	TX	SMB	2	OK	00'04
06/15 09:39	Scan tug-minicompute	Tug's Folder	2629	TX	SMB	10	OK	00'14
06/15 14:01	Scan DANIEL-DESKTOP	Daniel's Folder	2630	TX	SMB	5	OK	00'06
06/16 06:30	Scan DANIEL-DESKTOP	Daniel's Folder	2631	TX	SMB	3	OK	00'04
06/16 06:55	Scan DANIEL-DESKTOP	Daniel's Folder	2632	TX	SMB	3	OK	00'06
06/16 10:08	Scan RDH-XEON SondraScan	Sondra's Lenovo	2633	TX	SMB	2	OK	00'04
06/16 10:19	RDH-XEON SondraScan	Sondra's Lenovo	2634	TX	SMB	9	OK	00'13
06/16 10:52	DANIEL-DESKTOP	Daniel's Folder	2635	TX	SMB	1	OK	00'04
06/16 11:11	Scan DANIEL-DESKTOP	Daniel's Folder	2636	TX	SMB	2	OK	00'05
06/16 11:11	Scan DANIEL-DESKTOP	Daniel's Folder	2637	TX	SMB	2	OK	00'04
06/16 11:13	Scan DANIEL-DESKTOP	Daniel's Folder	2638	TX	SMB	1	OK	00'03
06/16 11:13	Scan DANIEL-DESKTOP	Daniel's Folder	2639	TX	SMB	1	OK	00'01
06/16 11:14	Scan DANIEL-DESKTOP	Daniel's Folder	2640	TX	SMB	1	OK	00'03
06/16 11:14	Scan DANIEL-DESKTOP	Daniel's Folder	2641	TX	SMB	24	OK	00'24
06/16 11:16	Scan DANIEL-DESKTOP	Daniel's Folder	2642	TX	SMB	13	OK	00'12
06/16 11:17	Scan DANIEL-DESKTOP	Daniel's Folder	2643	TX	SMB	1	OK	00'03
06/16 11:17	Scan DANIEL-DESKTOP	Daniel's Folder	2644	TX	SMB	7	OK	00'08
06/16 11:18	Scan DANIEL-DESKTOP	Daniel's Folder	2645	TX	SMB	12	OK	00'14
06/16 11:19	Scan DANIEL-DESKTOP	Daniel's Folder	2646	TX	SMB	9	OK	00'13
06/16 12:45	Scan DANIEL-DESKTOP	Daniel's Folder	2647	TX	SMB	1	OK	00'03
06/16 12:46	Scan DANIEL-DESKTOP	Daniel's Folder	2648	TX	SMB	1	OK	00'03
06/16 12:46	Scan DANIEL-DESKTOP	Daniel's Folder	2649	TX	SMB	1	OK	00'03
06/16 12:55	Scan RDH-XEON SondraScan	Sondra's Lenovo	2650	TX	SMB	2	OK	00'03
06/16 15:08	DANIEL-DESKTOP	Daniel's Folder	2651	TX	SMB	1	OK	00'03
06/17 10:18	Scan DANIEL-DESKTOP	Daniel's Folder	2652	TX	SMB	1	OK	00'04
06/17 11:56	Scan RDH-XEON SondraScan	Sondra's Lenovo	2653	TX	SMB	9	OK	00'13
06/17 12:11	DANIEL-DESKTOP	Daniel's Folder	2654	TX	SMB	1	OK	00'03
06/17 12:41	Scan DANIEL-DESKTOP	Daniel's Folder	2655	TX	SMB	4	OK	00'05
06/17 12:43	Scan DANIEL-DESKTOP	Daniel's Folder	2656	TX	SMB	1	OK	00'03
06/17 13:56	Scan DANIEL-DESKTOP	Daniel's Folder	2657	TX	SMB	1	OK	00'04

06/17 13:56	Scan DANIEL-DESKTOP	Daniel's Folder	2658	TX	SMB	1	OK	00'03
06/18 06:27	Scan DANIEL-DESKTOP	Daniel's Folder	2659	TX	SMB	27	OK	00'26
06/18 12:47	Scan RDH-XEON	Sondra's Lenovo	2660	TX	SMB	1	OK	00'03
06/18 15:03	SondraScan Cami-Laptop	Cami's Folder	2661	TX	SMB	3	OK	00'05
06/23 08:08	Scan DANIEL-DESKTOP	Daniel's Folder	2662	TX	SMB	1	OK	00'03
06/23 08:08	Scan DANIEL-DESKTOP	Daniel's Folder	2663	TX	SMB	3	OK	00'04
06/23 08:36	Scan DANIEL-DESKTOP	Daniel's Folder	2664	TX	SMB	1	OK	00'03
06/23 09:47	Scan Cami-Laptop	Cami's Folder	2665	TX	SMB	2	OK	00'04
06/23 12:12	Scan RDH-XEON	Sondra's Lenovo	2666	TX	SMB	2	OK	00'05
06/24 08:51	SondraScan DANIEL-DESKTOP	Daniel's Folder	2667	TX	SMB	2	OK	00'04
06/24 09:01	Scan DANIEL-DESKTOP	Daniel's Folder	2668	TX	SMB	2	OK	00'04
06/24 12:36	Scan Cami-Laptop	Cami's Folder	2669	TX	SMB	1	OK	00'03
06/24 13:31	Scan Cami-Laptop	Cami's Folder	2670	TX	SMB	1	OK	00'03
06/24 13:52	Scan Cami-Laptop	Cami's Folder	2671	TX	SMB	2	OK	00'04
06/24 14:07	Scan DANIEL-DESKTOP	Daniel's Folder	2672	TX	SMB	1	OK	00'03
06/24 14:49	Scan DANIEL-DESKTOP	Daniel's Folder	2673	TX	SMB	1	OK	00'03
06/24 15:57	Scan Cami-Laptop	Cami's Folder	2674	TX	SMB	2	OK	00'04
06/25 07:57	Scan Cami-Laptop	Cami's Folder	2675	TX	SMB	1	OK	00'03
06/25 07:58	Scan Cami-Laptop	Cami's Folder	2676	TX	SMB	1	OK	00'04
06/25 10:38	Scan DANIEL-DESKTOP	Daniel's Folder	2677	TX	SMB	1	OK	00'03
06/25 12:48	Scan RDH-XEON	Sondra's Lenovo	2678	TX	SMB	1	OK	00'03
06/28 12:17	SondraScan DANIEL-DESKTOP	Daniel's Folder	2679	TX	SMB	1	OK	00'03
06/28 12:56	Scan Cami-Laptop	Cami's Folder	2680	TX	SMB	5	OK	00'07
06/28 13:48	Scan Cami-Laptop	Cami's Folder	2681	TX	SMB	1	OK	00'03
06/28 14:17	Scan Cami-Laptop	Cami's Folder	2682	TX	SMB	5	OK	00'07
06/28 14:43	Scan DANIEL-DESKTOP	Daniel's Folder	2683	TX	SMB	1	OK	00'03
06/28 15:11	Scan RDH-XEON	Stephen's Lenovo	2684	TX	SMB	1	OK	00'03
06/29 11:53	StephenScan DANIEL-DESKTOP	Daniel's Folder	2685	TX	SMB	5	OK	00'07
06/29 11:53	Scan DANIEL-DESKTOP	Daniel's Folder	2686	TX	SMB	3	OK	00'05
06/29 15:39	Scan Cami-Laptop	Cami's Folder	2687	TX	SMB	1	OK	00'04
06/29 15:40	Scan Cami-Laptop	Cami's Folder	2688	TX	SMB	1	OK	00'03

	Scan							
06/30 06:46	DANIEL-DESKTOP	Daniel's Folder	2689	TX	SMB	3	OK	00'05
	Scan							
06/30 06:47	DANIEL-DESKTOP	Daniel's Folder	2690	TX	SMB	4	OK	00'05
	Scan							
06/30 11:11	RDH-XEON	Christel's Lenovo	2691	TX	SMB	1	OK	00'03
	ChristelScan							
06/30 11:14	DANIEL-DESKTOP	Daniel's Folder	2692	TX	SMB	1	OK	00'03
	Scan							
06/30 14:18	Cami-Laptop	Cami's Folder	2693	TX	SMB	1	OK	00'04
	Scan							
07/01 07:28	DANIEL-DESKTOP	Daniel's Folder	2694	TX	SMB	5	OK	00'07
	Scan							
07/01 07:32	DANIEL-DESKTOP	Daniel's Folder	2695	TX	SMB	4	OK	00'05
	Scan							
07/01 08:23	DANIEL-DESKTOP	Daniel's Folder	2696	TX	SMB	3	OK	00'04
	Scan							
07/01 09:39	DANIEL-DESKTOP	Daniel's Folder	2697	TX	SMB	1	OK	00'03
	Scan							
07/01 09:47	Cami-Laptop	Cami's Folder	2698	TX	SMB	1	OK	00'06
	Scan							