DESIGN SPECIFICATIONS

- DESIGN CODES:
  2017 FLORIDA BUILDING CODE (FBC) - RESIDENTIAL
  ASCE 7-10, 2005
  NDS, ACI, ATIC, AWPA, APA, ICC 600-08
- OCCUPANCY: RESIDENTIAL GROUP R-3 (ONE- AND TWO-FAMILY DWELLINGS
- DESIGN LOADS:

  ROOF TRUSS:
  LL 20 PSF TOP CHORD
  LL 0 PSF BOTTOM CHORD
  DL 7 PSF TOP CHORD
  DL 5 PSF BOTTOM CHORD

  ROOF CONVENTIONAL FRAMING:
  LL 20 PSF RAFTERS
  LL 20 PSF CEILING JOISTS
  DL 10 PSF RAFTERS
  DL 10 PSF CEILING JOISTS
  DL 30 PSF ATTICS WITH STORAGE
  DL 10 PSF ATTICS W/O STORAGE

  FLOORS:
  LL 40 PSF TOP CHORD
  LL 0 PSF BOTTOM CHORD
  DL 10 PSF TOP CHORD
  DL 5 PSF BOTTOM CHORD
- MAXIMUM HEIGHT OF STRUCTURE: 29.2'
- NUMBER OF STORIES: 1
- TYPE OF CONSTRUCTION: TYPE V-6, UNPROTECTED, UNSPRINKLERED
- WIND ZONE INFORMATION
  BUILDING: ENCLOSED STRUCTURE
  ULTIMATE DESIGN WIND SPEED: 130 MPH
  NOMINAL DESIGN WIND SPEED: 110 MPH
  BUILDING RISK CATEGORY: II
  WIND EXPOSURE CATEGORY: C
  INTERNAL PRESSURE COEFFICIENT: 0.18 CG_{pi} ±

FOUNDATION NOTES

1. REFER TO ARCHITECTURAL & BUILDING PLANS FOR ACTUAL DIMENSIONS, RECESSES IN SLAB, STEP DOWNS, ETC.
2. CONTRACTOR SHALL VERIFY ALL ROUGH PLUMBING LOCATIONS WITH OWNER PRIOR TO POURING SLAB
3. THE SLAB SHALL BE 4" CONCRETE SLAB REINFORCED w/ 6X6-1.4/1.4 WELDED WIRE MESH PLACED ON CHAIRS 1 ½" DEPTH OR FIBER MESH CONCRETE, 6-MIL POLY VAPOR BARRIER w/ 6" LAPS SEALED w/ POLY TAPE OVER TERMITE-TREATED & COMPACTED FILL
4. BOTTOM OF EXTERIOR FOOTINGS SHALL BE A MINIMUM OF 12" BELOW UNDISTURBED SOIL OR ENGINEERED FILL PER FBC-RES. SECTION R403.1.4

ALL THREAD NOTES

● ⅜" A307 DIAMETER THREADED ROD TERMINATES AT TOP PLATE PER DETAIL ON S-2

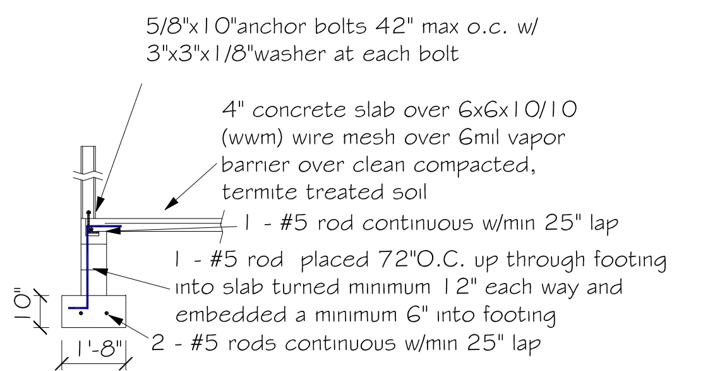
5/8"x10"anchor bolts 42" max o.c. w/ 3"x3"x1/8"washer at each bolt
4" concrete slab over 6x6x10/10 (wwm) wire mesh over 6mil vapor barrier over clean compacted, termite treated soil
1 - #5 rod continuous w/min 25" lap
1 - #5 rod placed 72"O.C. up through footing into slab turned minimum 12" each way and embedded a minimum 6" into footing
2 - #5 rods continuous w/min 25" lap
10"
1'-8"

Ⓐ Stem wall foundation (typ)

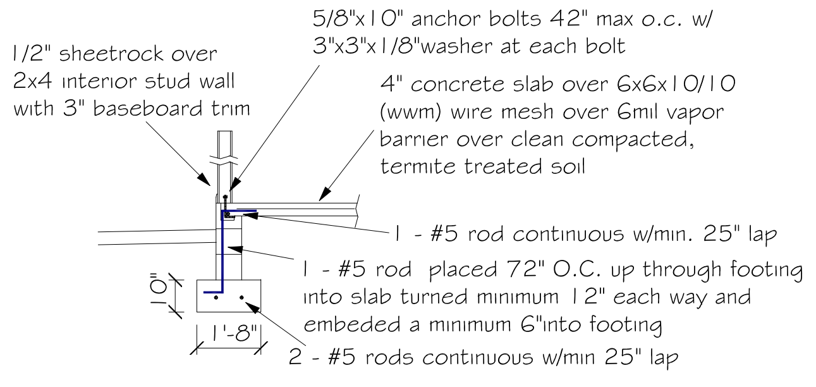
1/2" sheetrock over 2x4 interior stud wall with 3" baseboard trim
5/8"x10" anchor bolts 42" max o.c. w/ 3"x3"x1/8"washer at each bolt
4" concrete slab over 6x6x10/10 (wwm) wire mesh over 6mil vapor barrier over clean compacted, termite treated soil
1 - #5 rod continuous w/min. 25" lap
1 - #5 rod placed 72" O.C. up through footing into slab turned minimum 12" each way and embeded a minimum 6"into footing
2 - #5 rods continuous w/min 25" lap
10"
1'-8"

Ⓑ Stem wall foundation drop footing

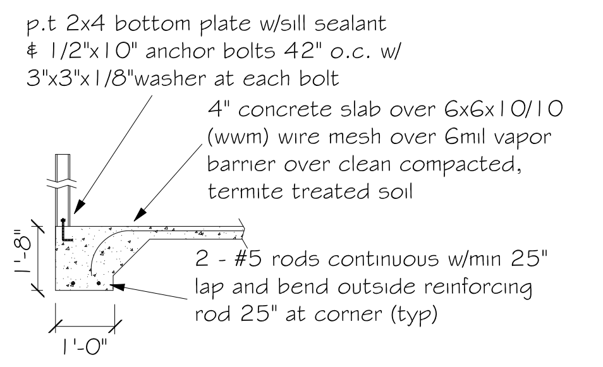
p.t 2x4 bottom plate w/sill sealant & 1/2"x10" anchor bolts 42" o.c. w/ 3"x3"x1/8"washer at each bolt
4" concrete slab over 6x6x10/10 (wwm) wire mesh over 6mil vapor barrier over clean compacted, termite treated soil
2 - #5 rods continuous w/min 25" lap and bend outside reinforcing rod 25" at corner (typ)
1'-8"
1'-0"

Ⓒ Monolythic slab detail

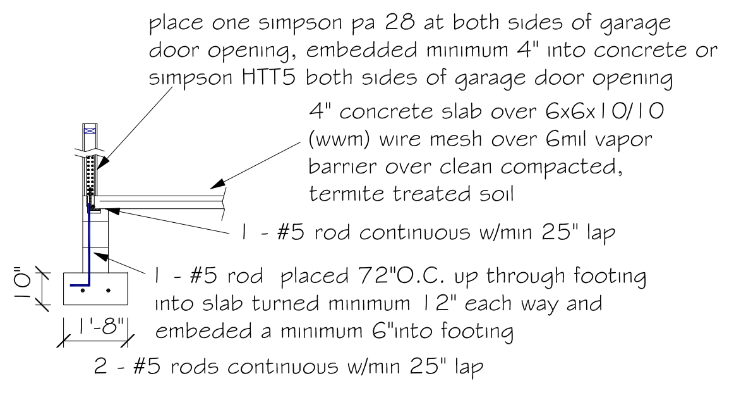
place one simpson pa 28 at both sides of garage door opening, embedded minimum 4" into concrete or simpson HTT5 both sides of garage door opening
4" concrete slab over 6x6x10/10 (wwm) wire mesh over 6mil vapor barrier over clean compacted, termite treated soil
1 - #5 rod continuous w/min 25" lap
1 - #5 rod placed 72"O.C. up through footing into slab turned minimum 12" each way and embeded a minimum 6"into footing
2 - #5 rods continuous w/min 25" lap
10"
1'-8"

Ⓓ Stem wall foundation at garage

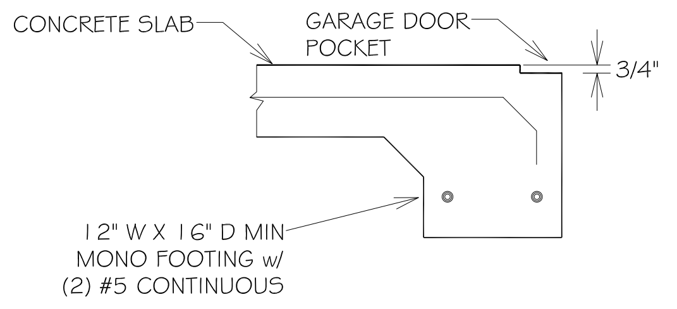
CONCRETE SLAB
GARAGE DOOR POCKET
3/4"
12" W X 16" D MIN MONO FOOTING w/ (2) #5 CONTINUOUS

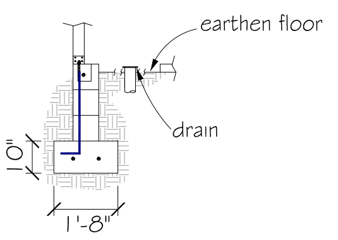
earthen floor
drain
10"
1'-8"

Ⓔ Recessed Shower Detail

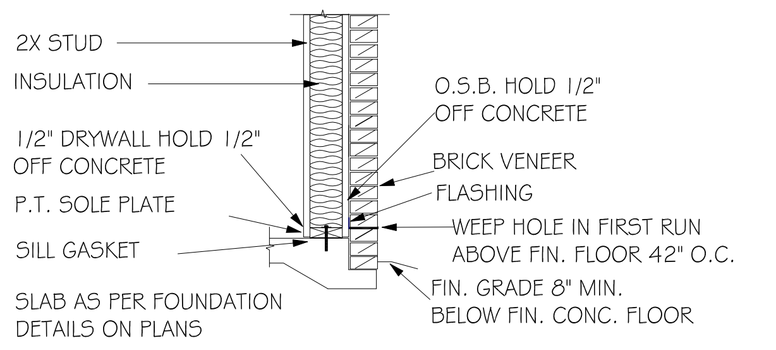
2X STUD
INSULATION
1/2" DRYWALL HOLD 1/2" OFF CONCRETE
P.T. SOLE PLATE
SILL GASKET
SLAB AS PER FOUNDATION DETAILS ON PLANS
O.S.B. HOLD 1/2" OFF CONCRETE
BRICK VENEER
FLASHING
WEEP HOLE IN FIRST RUN ABOVE FIN. FLOOR 42" O.C.
FIN. GRADE 8" MIN. BELOW FIN. CONC. FLOOR

BRICK VENEER

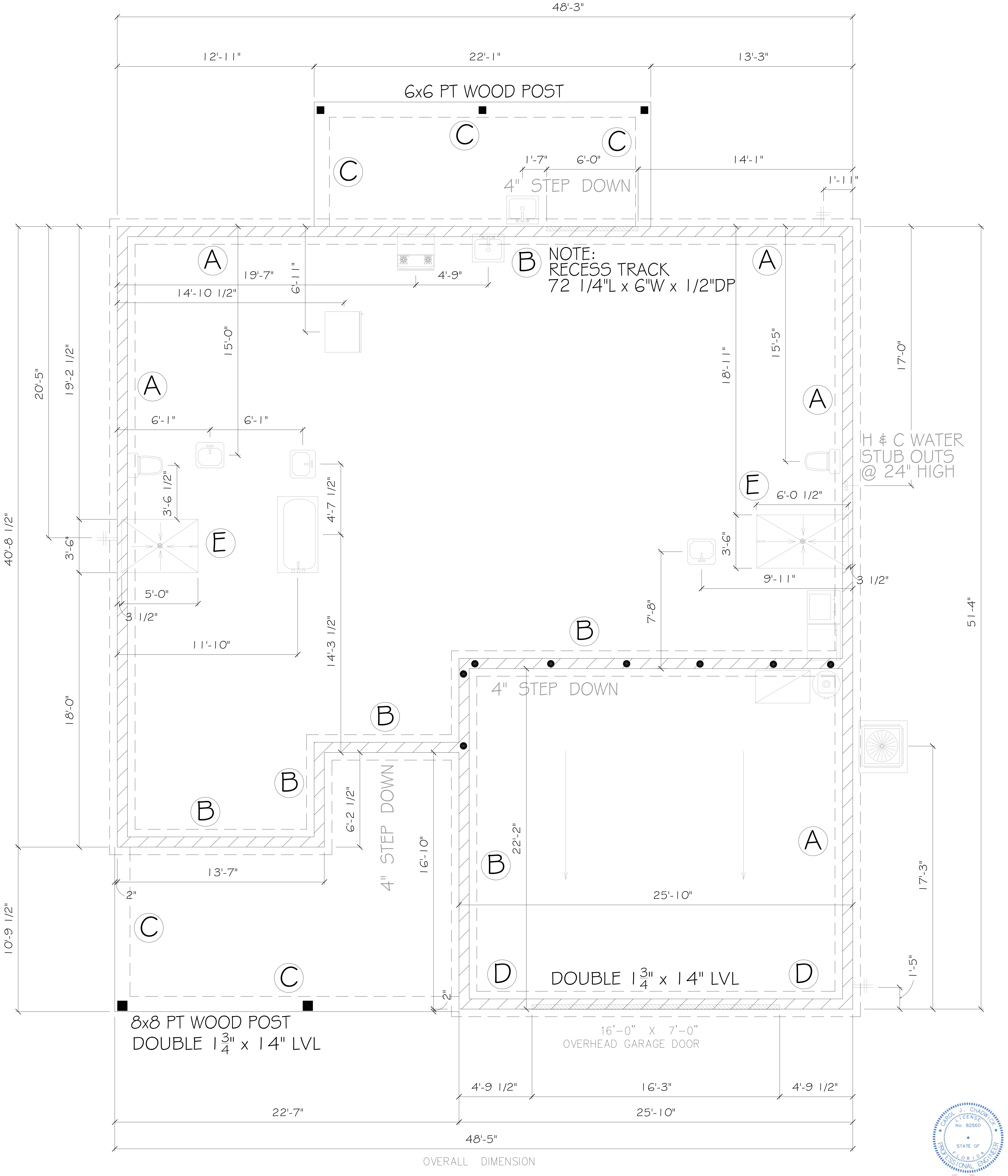
48'-3"
12'-11"
22'-1"
13'-3"
6x6 PT WOOD POST
C
C
C
1'-7"
6'-0"
14'-1"
1'-11"
4" STEP DOWN
A
19'-7"
4'-9"
B
NOTE:
RECESS TRACK
72 1/4"L x 6"W x 1/2"DP
A
14'-10 1/2"
6'-11"
15'-0"
15'-5"
18'-11"
17'-0"
20'-5"
19'-2 1/2"
A
A
6'-1"
6'-1"
H & C WATER
STUB OUTS
@ 24" HIGH
3'-6 1/2"
4'-7 1/2"
E
6'-0 1/2"
40'-8 1/2"
3'-6"
E
3'-6"
9'-11"
3 1/2"
5'-0"
3 1/2"
7'-8"
51'-4"
B
11'-10"
14'-3 1/2"
4" STEP DOWN
18'-0"
B
B
B
6'-2 1/2"
4" STEP DOWN
16'-10"
22'-2"
B
A
13'-7"
2"
25'-10"
17'-3"
10'-9 1/2"
C
C
D
DOUBLE 1¾" x 14" LVL
D
2"
1'-5"
8x8 PT WOOD POST
DOUBLE 1¾" x 14" LVL
16'-0" X 7'-0"
OVERHEAD GARAGE DOOR
4'-9 1/2"
16'-3"
4'-9 1/2"
22'-7"
25'-10"
48'-5"
OVERALL DIMENSION

No. 82560

Carol Chadwick, PE
cn=Carol Chadwick, PE, o=This item has been electronically signed and sealed by Carol Chadwick, PE using a digital signature., ou, email=ccpewyo@gmail.com, c=US
2020.05.30 07:50:54 -04'00'

CAROL CHADWICK P.E.
Civil Engineer
1208 S.W. Fairfax Glen
Lake City, FL 32025
307.680.1772
ccpewyo@gmail.com
www.carolchadwickpe.com
FLORIDA • WYOMING
OREGON • CALIFORNIA • N.C.E.E.S.

No. 82560

DATE	REVISION DESCRIPTION

PREPARED FOR
BRYAN ZECHER CONSTRUCTION
386.752.8653
bczecher@comcast.net

CLANCY RESIDENCE
FOUNDATION DETAILS

PROJECT NO. FL20099
DATE MAY 29, 2020
REVISION DATE
SHEET S-1

C:\CONSULTING\JOB FILES\PLAN REVIEW\FL20099-CLANCY\DETAILS\FL20099 S-1.dwg, 5/30/2020 7:47:23 AM

ROOF VENT CALCULATION

FORMULA

1 SQUARE INCH FOR EVERY 300 SQUARE INCHES OF CEILING
144 SQUARE INCHES = 1 SQUARE FOOT
BUILDING CEILING (SQ FT) X 144 = BUILDING (SQ IN)
BUILDING (SQ IN) /300 = SQ IN OF VENT REQUIRED
SQ IN OF VENT REQUIRED /2 = 50% AT HIGH AND 50% AT LOW

PER FBC SECTION R806.2: 40% MIN, BUT NOT MORE THAN 50% OF VENTILATION MUST BE PROVIDED BY VENTILATORS LOCATED A MIN 3'-0" ABOVE EAVE

BASE OF CALCULATION:

(a) OFF RIDGE VENTS - STAMPCO W/ 36 SQ IN (NFVA) PER LINEAL FT

(b) SOFFIT VENTS - GP T3-1/3" FULL VENT PERFORATED W/ 9.19 SQ IN (NFVA) PER LINEAL FT

CALCULATED LINELA FOOT OF SOFFIT VENT SHALL NOT INCLUDE NON-VENTED FIRE RATED SOFFIT LOCATED LESS THAN 5' FROM PROPERTY LINE

	AREA (SQ FT)	REQUIRED		PROVIDED			
		HIGH	LOW	VENTS	HIGH (SQ IN)	LINEAL FT	LOW (SQ IN)

HIGH: (1) 6' VENT = 216 SQ IN
LOW: (1) LINEAL FT = 9.19 SQ IN

SOFFIT TABLE VENT SPECS

Double 5" perforated soffits have a 6.20 sq. inches/sq. foot rating

Triple 4" center vent soffit has a 1.956 sq. inches/sq. foot rating

Triple 4" full vent soffit has a 5.867 sq. inches/sq. foot rating

Triple 4" basketweave full vent has a 14.34 sq. inches/sq. foot rating

Triple 4" center vent has a 4.78 sq. inches/sq. foot rating

Beaded hidden vent soffit has 2.66 sq. inches/sq. foot rating

Triple 3-1/3" hidden vent soffit has a 9.19 sq. inches/sq. foot rating

NOTE

7/16" O.S.B. NAILED WITH 8D 6" O.C. IN FIELD & 4" O.C. ON EDGES

NOTE

Simpson Strong-Tie Co. **Strong-Drive SDWC TRUSS Screws** may be used for uplift connection in lieu of straps. Strong-Drive SDWC TRUSS Screws to be installed per manufacturer's specifications.

Simpson Strong-Tie Co. **Titen HD Heavy-Duty Screw Anchors 5/8" x 8",** maximum spacing of 42" o.c., may be used in lieu of 5/8"x10" anchor bolts with 3"x3"x1/8" washer. Titen HD Heavy-Duty Screw Anchors shall be installed per manufacturer's specifications.

ROOF SHEATHING FASTENING

- 4" O.C. GABLE END
- 6" O.C. EDGES (ALL ZONES)
- 6" O.C. INTERMEDIATE FRAMING (ZONE 3)
- 12" O.C. INTERMEDIATE FRAMING (ZONES 1 & 2)

SEE FIGURE R803.2.3.1, SECTION R803.1, 2017 FLORIDA BUILDING CODE - RESIDENTIAL, SIXTH EDITION FOR ROOF SHEATHING NAILING ZONES

ROOF NOTES

ROOF PITCH LESS THEN 4/12 DBL LAYER OF UNDERLAYMENT IS REQUIRED

OVERLAP ROOFING UNDERLAYMENT 4'(MIN) OVER HIPS AND RIDGES

BUTTON CAP NAILS ARE USED TO FASTEN UNDERLAYMENT TO ROOF DECK WHEN SHINGLES NOT INSTALLED SAME DAY

DRIP EDGE INSTALLED OVER THE UNDERLAYMENT AT RAKES AND UNDER THE UNDERLAYMENT AT EAVES

ALL ROOF PENETRATIONS ARE PROPERLY FLASHED W/ FLASHING OF THE CORRECT SIZE FOR THE PENETRATION

METAL ROOFING ATTACHED W/ CORRECT FASTENERS PER CODE AND MANUFACTURERS SPECS

1" SPACE IS MAINTAINED BETWEEN THE END OF THE GUTTER AND THE WALL CLADDING

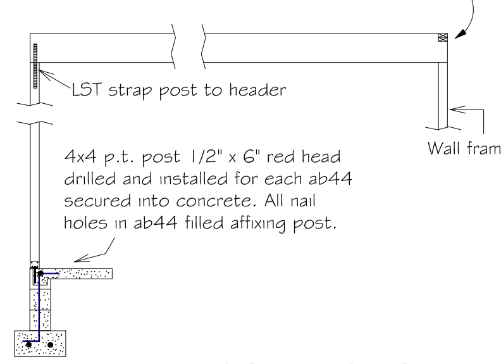
Double 2" x 12" beam notched under double top plate with framing members under each beam. Fastened with 12d nails to top plate and framing members underneath.
LST strap post to header
Wall framing
4x4 p.t. post 1/2" x 6" red head drilled and installed for each ab44 secured into concrete. All nail holes in ab44 filled affixing post.

BEAM CONNECTION DETAIL
NOT TO SCALE

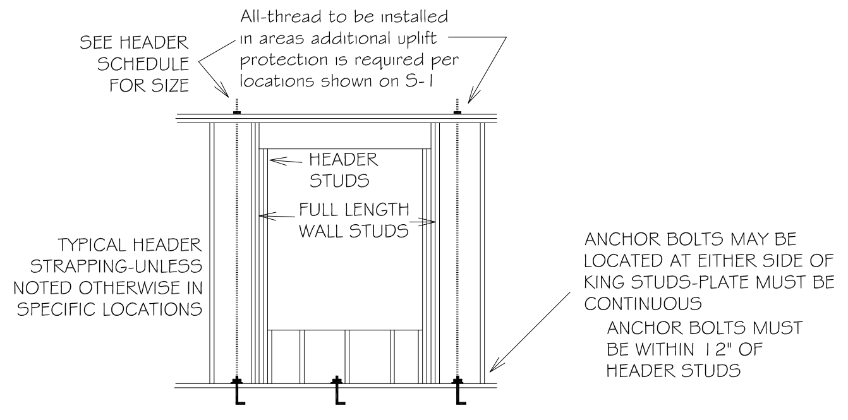
SEE HEADER SCHEDULE FOR SIZE
All-thread to be installed in areas additional uplift protection is required per locations shown on S-1
HEADER STUDS
FULL LENGTH WALL STUDS
TYPICAL HEADER STRAPPING-UNLESS NOTED OTHERWISE IN SPECIFIC LOCATIONS
ANCHOR BOLTS MAY BE LOCATED AT EITHER SIDE OF KING STUDS-PLATE MUST BE CONTINUOUS
ANCHOR BOLTS MUST BE WITHIN 12" OF HEADER STUDS

TYPICAL ALL THREAD DETAIL
NOT TO SCALE

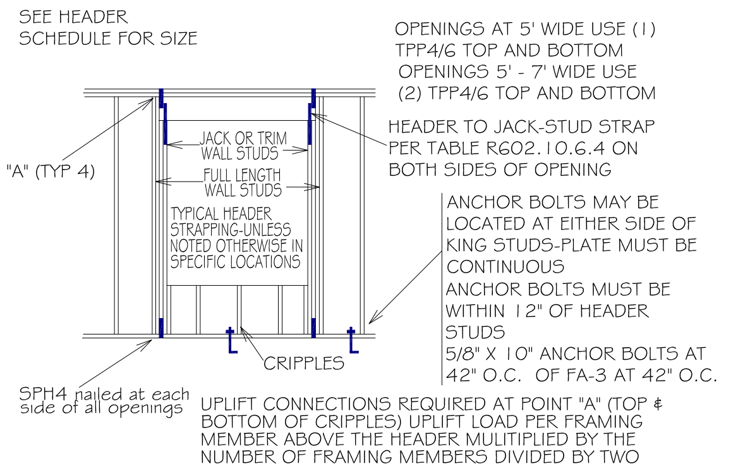
SEE HEADER SCHEDULE FOR SIZE
OPENINGS AT 5' WIDE USE (1) TPP4/6 TOP AND BOTTOM
OPENINGS 5' - 7' WIDE USE (2) TPP4/6 TOP AND BOTTOM
HEADER TO JACK-STUD STRAP PER TABLE R602.10.6.4 ON BOTH SIDES OF OPENING
POINT "A" (TYP 4)
JACK OR TRIM WALL STUDS
FULL LENGTH WALL STUDS
TYPICAL HEADER STRAPPING-UNLESS NOTED OTHERWISE IN SPECIFIC LOCATIONS
ANCHOR BOLTS MAY BE LOCATED AT EITHER SIDE OF KING STUDS-PLATE MUST BE CONTINUOUS
ANCHOR BOLTS MUST BE WITHIN 12" OF HEADER STUDS
5/8" X 10" ANCHOR BOLTS AT 42" O.C. OF FA-3 AT 42" O.C.
CRIPPLES
SPH4 nailed at each side of all openings
UPLIFT CONNECTIONS REQUIRED AT POINT "A" (TOP & BOTTOM OF CRIPPLES) UPLIFT LOAD PER FRAMING MEMBER ABOVE THE HEADER MULITIPLIED BY THE NUMBER OF FRAMING MEMBERS DIVIDED BY TWO

TYPICAL HEADER STRAPPING
NOT TO SCALE

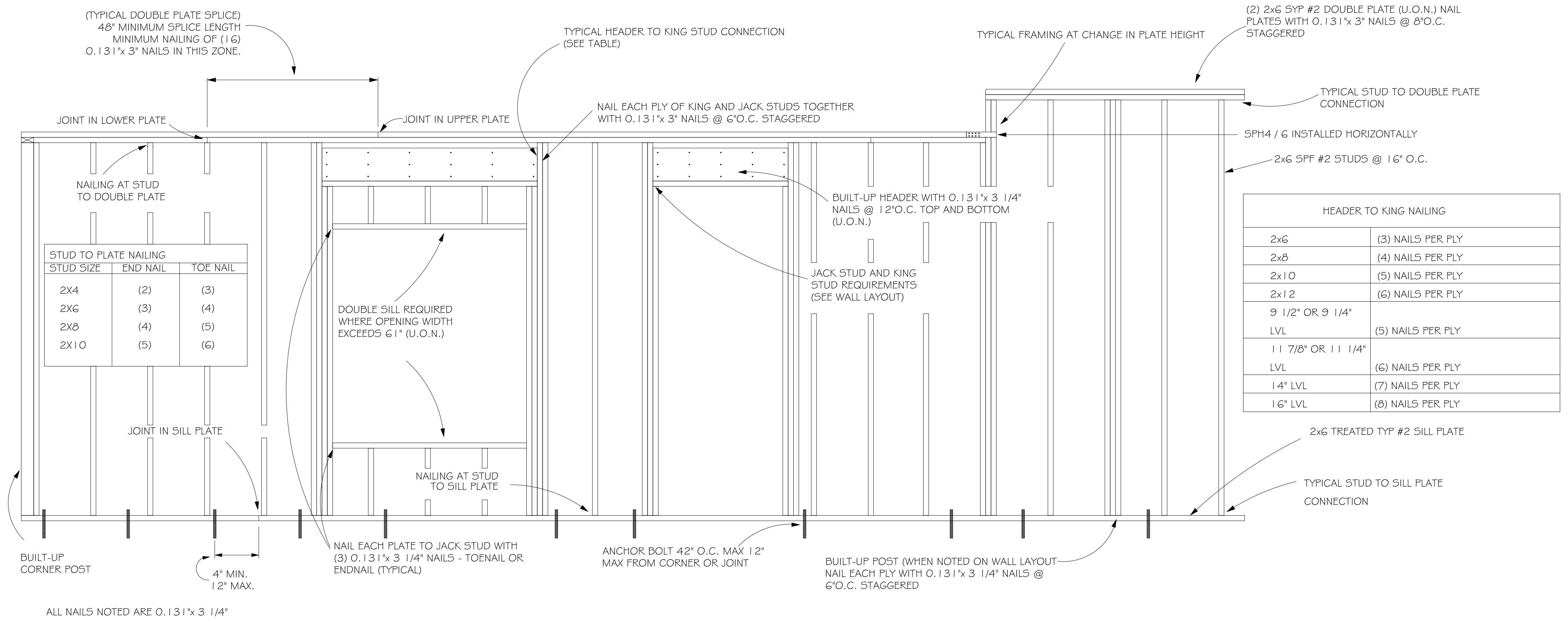
(TYPICAL DOUBLE PLATE SPLICE) 48" MINIMUM SPLICE LENGTH MINIMUM NAILING OF (16) 0.131"x 3" NAILS IN THIS ZONE.
TYPICAL HEADER TO KING STUD CONNECTION (SEE TABLE)
TYPICAL FRAMING AT CHANGE IN PLATE HEIGHT
(2) 2x6 SYP #2 DOUBLE PLATE (U.O.N.) NAIL PLATES WITH 0.131"x 3" NAILS @ 8"O.C. STAGGERED
TYPICAL STUD TO DOUBLE PLATE CONNECTION
JOINT IN LOWER PLATE
JOINT IN UPPER PLATE
NAIL EACH PLY OF KING AND JACK STUDS TOGETHER WITH 0.131"x 3" NAILS @ 6"O.C. STAGGERED
SPH4 / 6 INSTALLED HORIZONTALLY
2x6 SPF #2 STUDS @ 16" O.C.
NAILING AT STUD TO DOUBLE PLATE
BUILT-UP HEADER WITH 0.131"x 3 1/4" NAILS @ 12"O.C. TOP AND BOTTOM (U.O.N.)
JACK STUD AND KING STUD REQUIREMENTS (SEE WALL LAYOUT)
DOUBLE SILL REQUIRED WHERE OPENING WIDTH EXCEEDS 61" (U.O.N.)
2x6 TREATED TYP #2 SILL PLATE
JOINT IN SILL PLATE
NAILING AT STUD TO SILL PLATE
TYPICAL STUD TO SILL PLATE CONNECTION
BUILT-UP CORNER POST
NAIL EACH PLATE TO JACK STUD WITH (3) 0.131"x 3 1/4" NAILS - TOENAIL OR ENDNAIL (TYPICAL)
ANCHOR BOLT 42" O.C. MAX 12" MAX FROM CORNER OR JOINT
BUILT-UP POST (WHEN NOTED ON WALL LAYOUT NAIL EACH PLY WITH 0.131"x 3 1/4" NAILS @ 6"O.C. STAGGERED
4" MIN.
12" MAX.

STUD TO PLATE NAILING

STUD SIZE	END NAIL	TOE NAIL
2X4	(2)	(3)
2X6	(3)	(4)
2X8	(4)	(5)
2X10	(5)	(6)

HEADER TO KING NAILING

2x6	(3) NAILS PER PLY
2x8	(4) NAILS PER PLY
2x10	(5) NAILS PER PLY
2x12	(6) NAILS PER PLY
9 1/2" OR 9 1/4" LVL	(5) NAILS PER PLY
11 7/8" OR 11 1/4" LVL	(6) NAILS PER PLY
14" LVL	(7) NAILS PER PLY
16" LVL	(8) NAILS PER PLY

ALL NAILS NOTED ARE 0.131"x 3 1/4"

TYPICAL WALL FRAMING
NOT TO SCALE

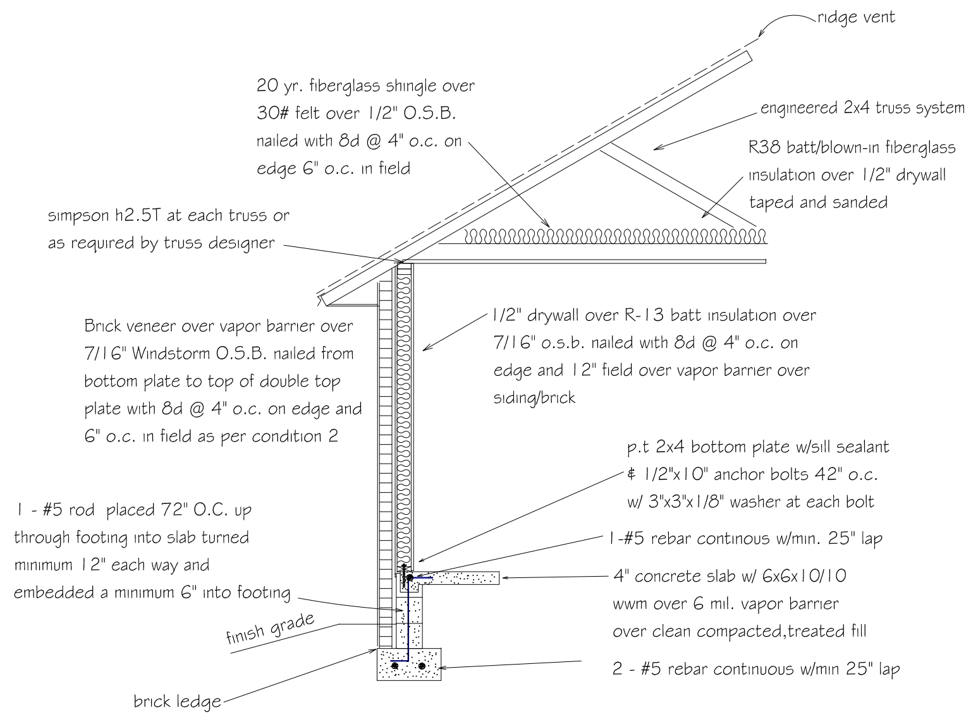
ridge vent
20 yr. fiberglass shingle over 30# felt over 1/2" O.S.B. nailed with 8d @ 4" o.c. on edge 6" o.c. in field
engineered 2x4 truss system
R38 batt/blown-in fiberglass insulation over 1/2" drywall taped and sanded
simpson h2.5T at each truss or as required by truss designer
Brick veneer over vapor barrier over 7/16" Windstorm O.S.B. nailed from bottom plate to top of double top plate with 8d @ 4" o.c. on edge and 6" o.c. in field as per condition 2
1/2" drywall over R-13 batt insulation over 7/16" o.s.b. nailed with 8d @ 4" o.c. on edge and 12" field over vapor barrier over siding/brick
p.t 2x4 bottom plate w/sill sealant & 1/2"x10" anchor bolts 42" o.c. w/ 3"x3"x1/8" washer at each bolt
1 - #5 rod placed 72" O.C. up through footing into slab turned minimum 12" each way and embedded a minimum 6" into footing
1-#5 rebar continous w/min. 25" lap
4" concrete slab w/ 6x6x10/10 wwm over 6 mil. vapor barrier over clean compacted,treated fill
finish grade
2 - #5 rebar continuous w/min 25" lap
brick ledge

ONE STORY WALL SECTION

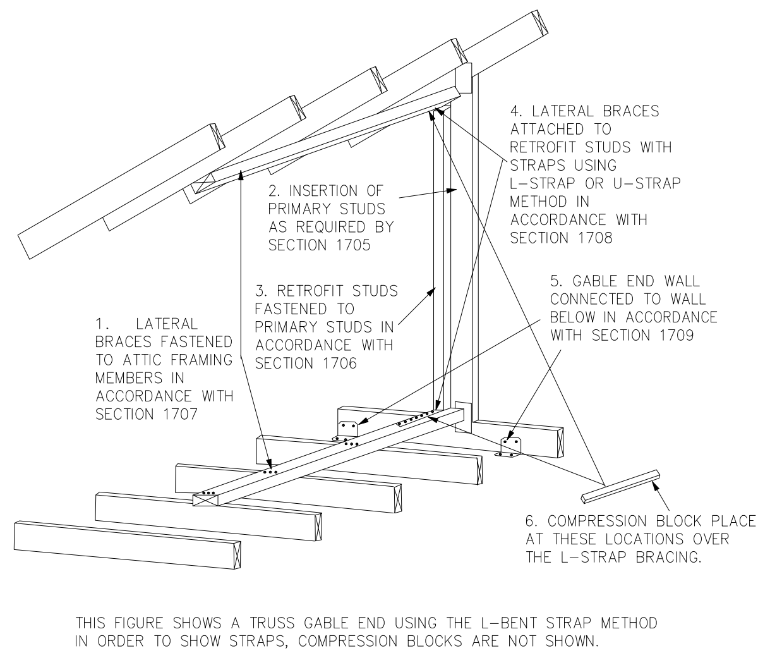
4. LATERAL BRACES ATTACHED TO RETROFIT STUDS WITH STRAPS USING L-STRAP OR U-STRAP METHOD IN ACCORDANCE WITH SECTION 1708
2. INSERTION OF PRIMARY STUDS AS REQUIRED BY SECTION 1705
3. RETROFIT STUDS FASTENED TO PRIMARY STUDS IN ACCORDANCE WITH SECTION 1706
5. GABLE END WALL CONNECTED TO WALL BELOW IN ACCORDANCE WITH SECTION 1709
1. LATERAL BRACES FASTENED TO ATTIC FRAMING MEMBERS IN ACCORDANCE WITH SECTION 1707
6. COMPRESSION BLOCK PLACE AT THESE LOCATIONS OVER THE L-STRAP BRACING.

THIS FIGURE SHOWS A TRUSS GABLE END USING THE L-BENT STRAP METHOD IN ORDER TO SHOW STRAPS, COMPRESSION BLOCKS ARE NOT SHOWN. THE METHODOLOGY FOR A CONVENTIONALLY FRAMED GABLE END IS SIMILAR. NOT ALL DETAILS ARE SHOWN.

GABLE END BRACING
NOT TO SCALE

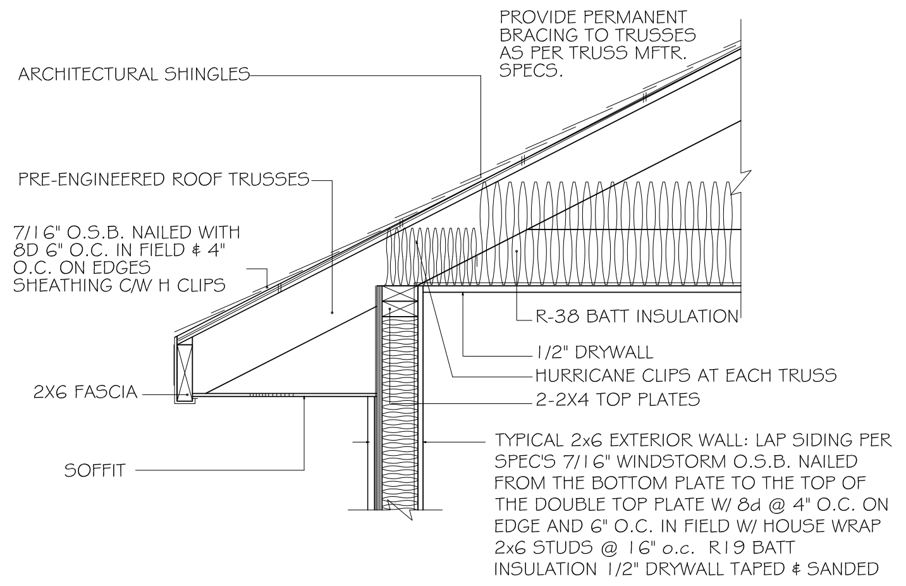
PROVIDE PERMANENT BRACING TO TRUSSES AS PER TRUSS MFTR. SPECS.
ARCHITECTURAL SHINGLES
PRE-ENGINEERED ROOF TRUSSES
7/16" O.S.B. NAILED WITH 8D 6" O.C. IN FIELD & 4" O.C. ON EDGES SHEATHING C/W H CLIPS
R-38 BATT INSULATION
1/2" DRYWALL
HURRICANE CLIPS AT EACH TRUSS
2-2X4 TOP PLATES
2X6 FASCIA
SOFFIT
TYPICAL 2x6 EXTERIOR WALL: LAP SIDING PER SPEC'S 7/16" WINDSTORM O.S.B. NAILED FROM THE BOTTOM PLATE TO THE TOP OF THE DOUBLE TOP PLATE W/ 8d @ 4" O.C. ON EDGE AND 6" O.C. IN FIELD W/ HOUSE WRAP 2x6 STUDS @ 16" o.c. R19 BATT INSULATION 1/2" DRYWALL TAPED & SANDED

4" STUD EAVE

HEADER SCHEDULE

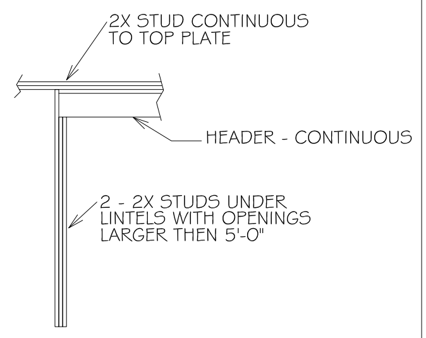
2X STUD CONTINUOUS TO TOP PLATE
HEADER - CONTINUOUS
2 - 2X STUDS UNDER LINTELS WITH OPENINGS LARGER THEN 5'-0"

OPENING WIDTH	BEARING OR SHEAR WALL	NON-BEARING WALLS
0'-0" TO 3'0"	2 - 2 X 6's	2 - 2 x 4's
3'-1" TO 5'-0"	2 - 2 x 10's	2 - 2 x 6's
5'-1" TO 7'-0"	2 - 2 x 10's	2 - 2 x 8's
7'-1" TO 10'-0"	2 - 2 x 10's	2 - 2 x 10's

NOTE:
UPLIFT CONNECTION IS REQUIRED AT EACH END OF HEADER AND AT BOTTOM OF HEADER STUDS IN ADDITION TO CONNECTORS AT WALL STUDS AND AT TOP AND BOTTOM OF CRIPPLES

MAXIMUM HEADER SPAN	3'	6'	9'	12'	15'	18'
NUMBER OF HEADER STUDS (JACKS) SUPPORTING END OF HEADER	1	1	2	2	2	2

NUMBER OF FULL LENGTH STUDS (KINGS) AT END OF HEADER	2

No. 82560
CAROL J. CHADWICK

Carol Chadwick, PE
cn=Carol Chadwick, PE, o=This item has been electronically signed and sealed by Carol Chadwick, PE using a digital signature., ou, email=ccpewyo@gmail.com, c=US
2020.05.30 07:51:15 -04'00'

CAROL CHADWICK P.E.
Civil Engineer
1208 S.W. Fairfax Glen
Lake City, FL 32025
307.680.1772
ccpewyo@gmail.com
www.carolchadwickpe.com
FLORIDA ♦ WYOMING
OREGON ♦ CALIFORNIA ♦ N.C.E.E.S.

DATE	REVISION DESCRIPTION

PREPARED FOR
BRYAN ZECHER CONSTRUCTION
386.752.8653
bczecher@comcast.net

CLANCY RESIDENCE
FRAMING DETAILS

PROJECT NO. FL20099
DATE MAY 29, 2020
REVISION DATE
SHEET S-2