DATE 01/23/2006

Columbia County Building Permit

This Permit Expires One Year From the Date of Issue

PERMIT
000024067

APPLICANT GARY CLEMMONS PHONE 386 418-2114

ADDRESS P.O. BOX 5893 GAINESVILLE FL 32627

OWNER GARY CLEMMONS PHONE 386 418-2114

ADDRESS 362 SW THORNE LANE FT. WHITE FL 32038

CONTRACTOR GARY CLEMMONS/GC CONSTRUCTION PHONE 386 418-2114

LOCATION OF PROPERTY 47S, TL ON 27, TR ON MAPLETON, TR ON HEFLIN, TL ON THORNE LANE, 7TH LOT ON LEFT

TYPE DEVELOPMENT SFD,UTILITY ESTIMATED COST OF CONSTRUCTION 71700.00

HEATED FLOOR AREA 1434.00 TOTAL AREA 2284.00 HEIGHT STORIES 1

FOUNDATION CONC WALLS FRAMED ROOF PITCH 5/12 FLOOR SLAB

LAND USE & ZONING A-3 MAX. HEIGHT 14

Minimum Set Back Requirments: STREET-FRONT 30.00 REAR 25.00 SIDE 25.00

NO. EX.D.U. 0 FLOOD ZONE X DEVELOPMENT PERMIT NO.

PARCEL ID 30-7S-17-10058-635 SUBDIVISION SANTA FE RIVER PLANT

LOT 45 BLOCK PHASE UNIT TOTAL ACRES 1.45

000000957		CGC052925	
Culvert Permit No.	Culvert Waiver	Contractor's License Number	Applicant/Owner/Contractor

WAIVER	05-1281-N	BK	JH	
Driveway Connection	Septic Tank Number	LU & Zoning checked by	Approved for Issuance	New Resident

COMMENTS: ONE FOOT ABOVE THE ROAD, NOC ON FILE

Check # or Cash 1025

FOR BUILDING & ZONING DEPARTMENT ONLY

(footer/Slab)

Temporary Power _____ date/app. by Foundation _____ date/app. by Monolithic _____ date/app. by

Under slab rough-in plumbing _____ date/app. by Slab _____ date/app. by Sheathing/Nailing _____ date/app. by

Framing _____ date/app. by Rough-in plumbing above slab and below wood floor _____ date/app. by

Electrical rough-in _____ date/app. by Heat & Air Duct _____ date/app. by Peri. beam (Lintel) _____ date/app. by

Permanent power _____ date/app. by C.O. Final _____ date/app. by Culvert _____ date/app. by

M/H tie downs, blocking, electricity and plumbing _____ date/app. by Pool _____ date/app. by

Reconnection _____ date/app. by Pump pole _____ date/app. by Utility Pole _____ date/app. by

M/H Pole _____ date/app. by Travel Trailer _____ date/app. by Re-roof _____ date/app. by

BUILDING PERMIT FEE $ 360.00 CERTIFICATION FEE $ 11.42 SURCHARGE FEE $ 11.42

MISC. FEES $ 0.00 ZONING CERT. FEE $ 50.00 FIRE FEE $ 0.00 WASTE FEE $

FLOOD DEVELOPMENT FEE $ FLOOD ZONE FEE $ 25.00 CULVERT FEE $ **TOTAL FEE** 457.84

INSPECTORS OFFICE CLERKS OFFICE

NOTICE: IN ADDITION TO THE REQUIREMENTS OF THIS PERMIT, THERE MAY BE ADDITIONAL RESTRICTIONS APPLICABLE TO THIS PROPERTY THAT MAY BE FOUND IN THE PUBLIC RECORDS OF THIS COUNTY. AND THERE MAY BE ADDITIONAL PERMITS REQUIRED FROM OTHER GOVERNMENTAL ENTITIES SUCH AS WATER MANAGEMENT DISTRICTS, STATE AGENCIES, OR FEDERAL AGENCIES.

"WARNING TO OWNER: YOUR FAILURE TO RECORD A NOTICE OF COMMENCEMENT MAY RESULT IN YOUR PAYING TWICE FOR IMPROVEMENTS TO YOUR PROPERTY. IF YOU INTEND TO OBTAIN FINANCING, CONSULT WITH YOUR LENDER OR AN ATTORNEY BEFORE RECORDING YOUR NOTICE OF COMMENCEMENT."

This Permit Must Be Prominently Posted on Premises During Construction

PLEASE NOTIFY THE COLUMBIA COUNTY BUILDING DEPARTMENT AT LEAST 24 HOURS IN ADVANCE OF EACH INSPECTION, IN ORDER THAT IT MAY BE MADE WITHOUT DELAY OR INCONVIENCE, PHONE 758-1008. THIS PERMIT IS NOT VALID UNLESS THE WORK AUTHORIZED BY IT IS COMMENCED WITHIN 6 MONTHS AFTER ISSUANCE.

The Issuance of this Permit Does Not Waive Compliance by Permittee with Deed Restrictions.

1024-1025 left message 1/23/06

Columbia County Building Permit Application

Revised 9-23-04

For Office Use Only Application # 0601-31 Date Received 1-11-06 By G Permit # 957 / 24067

Application Approved by - Zoning Official BLK Date 19.01.06 Plans Examiner OK JTH Date 1-23-06

Flood Zone X Development Permit N/A Zoning A-3 Land Use Plan Map Category A-3

Comments 911 Address

Applicants Name Gary Clemmons GC Construction of Gainesville, Inc Phone (386) 418-2114 FAX 418-0527

Address P.O Box 5893 Gainesville FL 32627

Owners Name Gary R Clemmons Phone (386) 418-2114

911 Address 362 SW Thorne Lane, Ft. White, FL 32038

Contractors Name GC Construction of Gainesville, Inc Phone (386) 418-2114

Address PO Box 5893 Gainesville, FL 32627

Fee Simple Owner Name & Address GC Construction of Gainesville, Inc

Bonding Co. Name & Address NA

Architect/Engineer Name & Address Steve Ryall Architectural Drafting 16794 NW 212th Terrace High Springs, FL 32643

Mortgage Lenders Name & Address Millennium Bank - 4340 Newberry Road Gainesville FL 32607

Circle the correct power company - FL Power & Light - Clay Elec. - Suwannee Valley Elec. - Progressive Energy

Property ID Number R10058-635 30-7S-17 Estimated Cost of Construction $150,000.

Subdivision Name Santa Fe River Plantations Lot 45 Block ____ Unit ____ Phase ____

Driving Directions From Ft. White take HWY 27 (Tr) South towards River, Turn R onto Mapleton, go 1/10 mile & turn R onto Heflin, go another 1/10 mile turn L on Thorne Lane, Property is on left.

Type of Construction SFR Number of Existing Dwellings on Property 0

Total Acreage 1.458 Lot Size ____ Do you need a - Culvert Permit or Culvert Waiver or Have an Existing Drive

Actual Distance of Structure from Properly Lines - Front 95' Side R53 Side L74 Rear 200'

Total Building Height 14' Number of Stories 1 Heated Floor Area 1434 Roof Pitch 5/12

Porches 344 GARAGE 506 TOTAL 2284

Application is hereby made to obtain a permit to do work and installations as indicated. I certify that no work or installation has commenced prior to the issuance of a permit and that all work be performed to meet the standards of all laws regulating construction in this jurisdiction.

OWNERS AFFIDAVIT: I hereby certify that all the foregoing information is accurate and all work will be done in compliance with all applicable laws and regulating construction and zoning.

WARNING TO OWNER: YOUR FAILURE TO RECORD A NOTICE OF COMMENCMENT MAY RESULT IN YOU PAYING TWICE FOR IMPROVEMENTS TO YOUR PROPERTY. IF YOU INTEND TO OBTAIN FINANCING, CONSULT WITH YOUR LENDER OR ATTORNEY BEFORE RECORDING YOUR NOTICE OF COMMENCEMENT.

Owner Builder or Agent (Including Contractor)

Contractor Signature

Contractors License Number

Competency Card Number

NOTARY STAMP/SEAL

STATE OF FLORIDA
COUNTY OF COLUMBIA

Sworn to (or affirmed) and subscribed before me this 17th day of January 2006.

Personally known ____ or Produced Identification DL

GALE TEDDER
MY COMMISSION # DD 339566
EXPIRES: June 20, 2008
Bonded Thru Notary Public Underwriters

Notary Signature

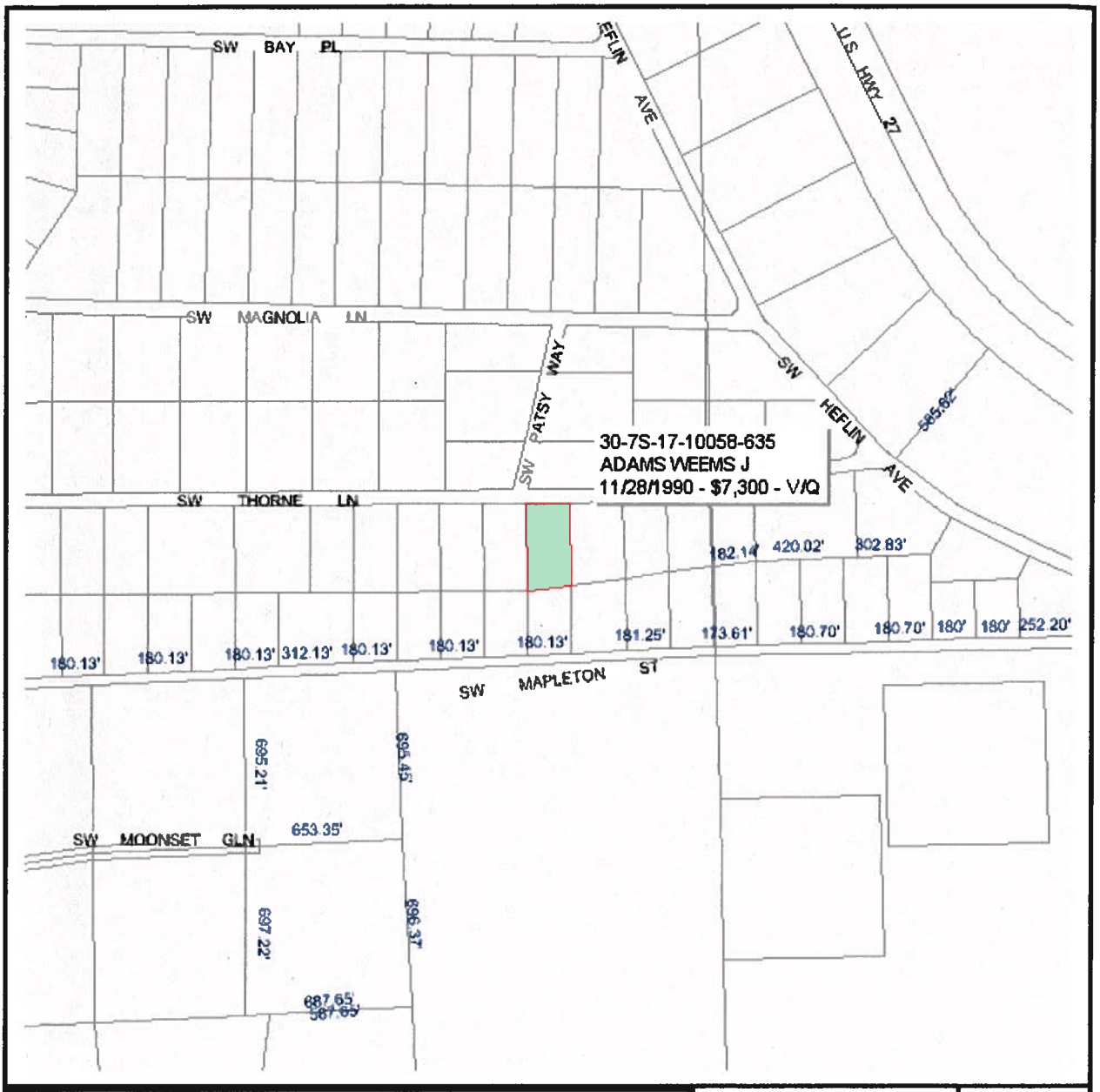

Columbia County Property Appraiser

J. Doyle Crews, CFA - Lake City, Florida - 386-758-1083

PARCEL: 30-7S-17-10058-635 - VACANT (000000)

LOT 45 SANTA FE RIVER PLANTATIONS REPLAT OF LOT 38. ORB 489-344, 490-20, 726-104,

Name:	G C CONSTRUCTION OF	LandVal	$16,644.00
Site:		BldgVal	$0.00
Mail:	GAINESVILLE INC P O BOX 5893 GAINESVILLE, FL 32627	ApprVal	$16,644.00
		JustVal	$16,644.00
		Assd	$16,644.00
Sales Info	8/25/2005 $47,500.00V / Q 11/20/1995 $0.00V / U 11/28/1990 $7,300.00V / Q	Exmpt	$0.00
		Taxable	$16,644.00

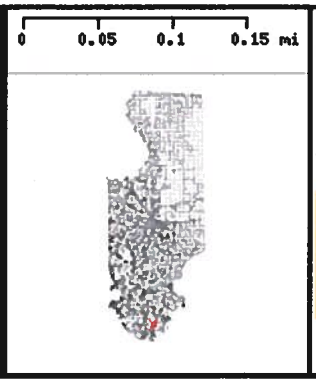

This information, GIS Map Updated: 8/3/2005, was derived from data which was compiled by the Columbia County Property Appraiser Office solely for the governmental purpose of property assessment. This information should not be relied upon by anyone as a determination of the ownership of property or market value. No warranties, expressed or implied, are provided for the accuracy of the data herein, it's use, or it's interpretation. Although it is periodically updated, this information may not reflect the data currently on file in the Property Appraiser's office. The assessed values are NOT certified values and therefore are subject to change before being finalized for ad valorem assessment purposes.

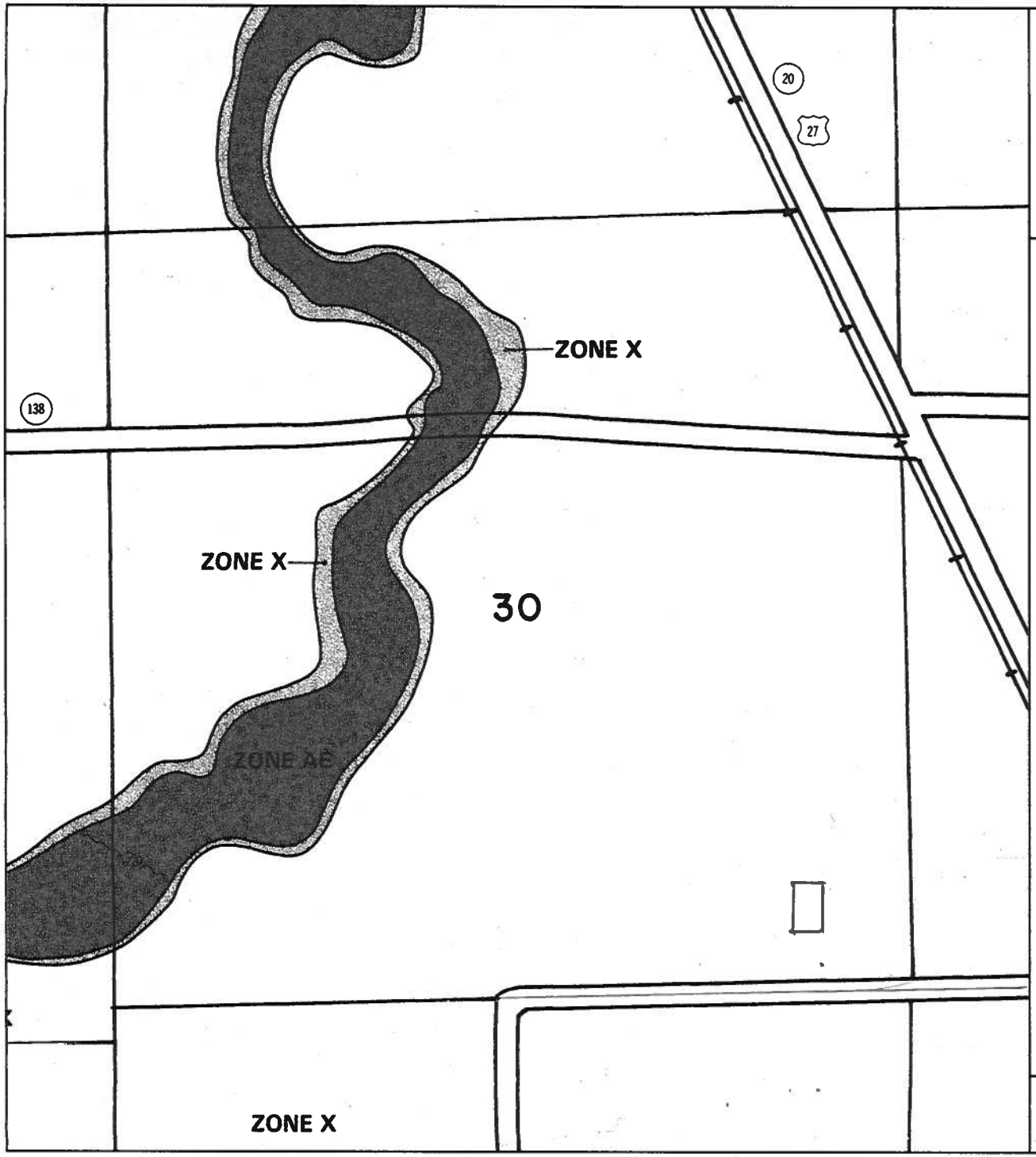

APPROXIMATE SCALE IN FEET

1000 0 1000

NATIONAL FLOOD INSURANCE PROGRAM

FIRM
FLOOD INSURANCE RATE MAP

COLUMBIA COUNTY, FLORIDA
(UNINCORPORATED AREAS)

PANEL 270 OF 290

PANEL LOCATION

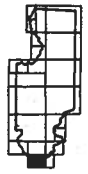

COMMUNITY-PANEL NUMBER
120070 0270 B

EFFECTIVE DATE:
JANUARY 6, 1988

Federal Emergency Management Agency

This is an official copy of a portion of the above referenced flood map. It was extracted using F-MIT Version 1.0. This map does not reflect changes or amendments which may have been made subsequent to the date on the title block. Futher information about National Flood Insurance Program flood hazard maps is available at www.fema.gov/mit/tsd.

Print Date: 1/17/2008 (printed at scale and type A)

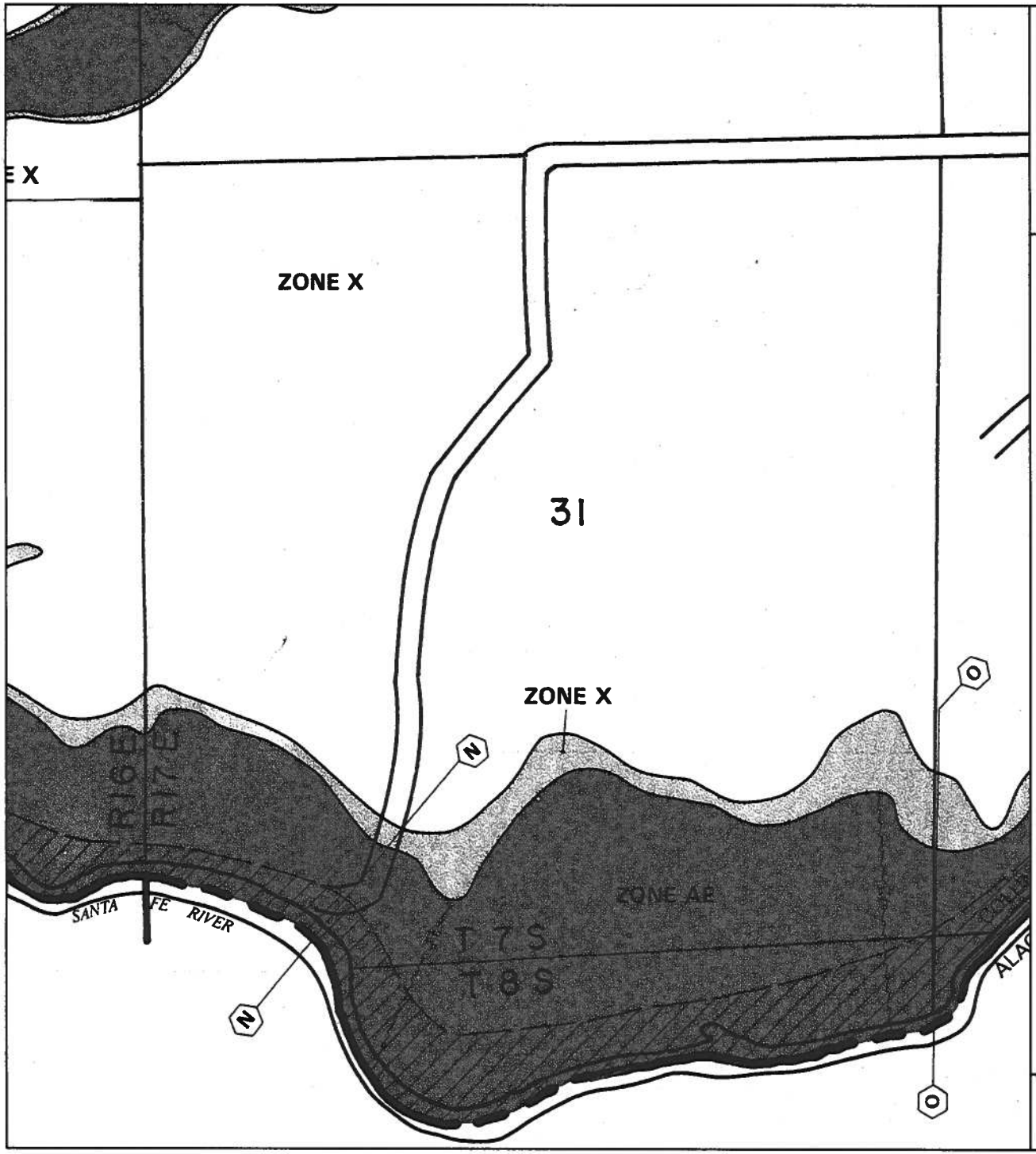

APPROXIMATE SCALE IN FEET

1000 0 1000

NATIONAL FLOOD INSURANCE PROGRAM

FIRM
FLOOD INSURANCE RATE MAP

COLUMBIA COUNTY, FLORIDA
(UNINCORPORATED AREAS)

PANEL 270 OF 290

PANEL LOCATION

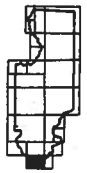

COMMUNITY-PANEL NUMBER
120070 0270 B

EFFECTIVE DATE:
JANUARY 6, 1988

Federal Emergency Management Agency

This is an official copy of a portion of the above referenced flood map. It was extracted using F-MIT Version 1.0. This map does not reflect changes or amendments which may have been made subsequent to the date on the title block. Futher information about National Flood Insurance Program flood hazard maps is available at www.fema.gov/mit/tsd.

Print Date: 1/17/2006 (printed at scale and type A)

This instrument prepared by:
Danielle Ehlers
Millennium Bank
4340 Newberry Road
Gainesville, Florida 32607

Inst:2005024302 Date:10/03/2005 Time:11:09
DC,P.DeWitt Cason,Columbia County B:1060 P:994

NOTICE OF COMMENCEMENT

Tax Folio No.
Permit No.
State of Florida
County of ~~Alachua~~ Columbia

To whom it may concern:

The undersigned hereby gives notice that improvements will be made to certain real property, and in accordance with Chapter 713, Florida Statutes, the following information is provided in this Notice of Commencement.

Description of real property to be improved (legal description and address if available)

Legal: Lot 45 Santa Fe River Plantations Replat of Lot 38 TP#30-7s-17-100-58-365 Columbia County
General description of improvements – Residential home construction.

Owner Information: G.C. Construction of Gainesville
15544 NW 25TH Terrace, Gainesville, FL 32609

Owner's interest in the site of the improvements (if other than fee simple title holder): Fee Simple

Name of fee simple title holder (if other than owner): N/A

Contractor: G.C. Construction of Gainesville,
15544 NW 25th Terrace, Gainesville, FL 32609

Surety on any payment bond: N/A

Name of any Lender making a loan for the construction of the improvements:
Millennium Bank (Name)
4340 Newberry Road, Gainesville, FL 32607 (Address)

Persons within the State of Florida designated by owner upon who notices or other documents may be served as provided by Section 713.13(1) (a) 7, Florida Statutes:
G.C. Construction of Gainesville, (Name)
15544 NW 25th Terrace, Gainesville, FL 32609 (Address)
386-418-2114 (Phone) _____ (Fax)

In addition to himself, owner designates the following person to receive a copy of the lienor's notice as provided in Section 713.13(1) (b), Florida Statutes:
Laura Fuller, Millennium Bank (Name)
4340 Newberry Road, Gainesville, FL 32607 (Address)
(352) 335-0999 (Phone) (352) 335-8650 (Fax)

This Notice of Commencement shall expire 9/27/2006

Gary Clemmons, President

STATE OF FLORIDA COUNTY OF COLUMBIA
I HEREBY CERTIFY that the above and foregoing is a true copy of the original filed in this office.
P. DeWITT CASON, CLERK OF COURTS
By Marie Ken
Deputy Clerk
Date 10-3-05

COLUMBIA COUNTY FLORIDA CLERK CIRCUIT COURT

STATE OF FLORIDA
COUNTY OF ~~ALACHUA~~ Columbia

The foregoing instrument was acknowledged before me this 27th day of September, 2005, by Gary Clemmons, who (x) are personally known to me or who ( ) presented _____ as identification, who executed the above instrument.

Danielle Ehlers
Notary Public Signature
My Commission Expires: 3/16/2009

(NOTARY SEAL)

Notary Public State of Florida
Danielle Ehlers
My Commission DD407957
Expires 03/16/2009

STATE OF FLORIDA
DEPARTMENT OF HEALTH

APPLICATION FOR ONSITE SEWAGE DISPOSAL SYSTEM CONSTRUCTION PERMIT

Permit Application Number 05-1281N

PART II - SITE PLAN

Scale: Each block represents 5 feet and 1 inch = 50 feet.

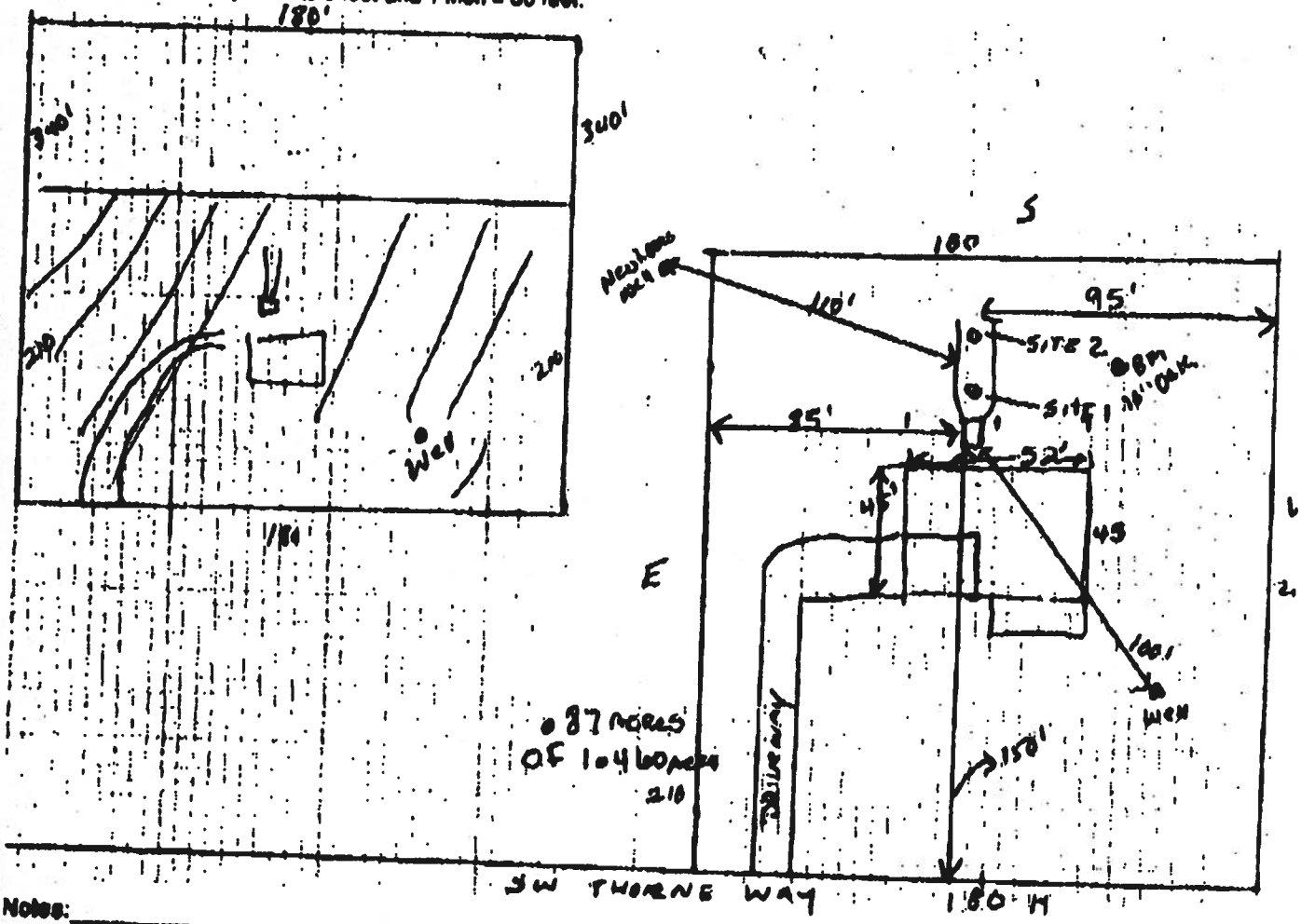

Notes:

Site Plan submitted by: Robert W Ford
Signature

Agent
Title

Plan Approved ✓ Not Approved ____

Date 1-4-05

By [signature] Columbia County Health Department

ALL CHANGES MUST BE APPROVED BY THE COUNTY HEALTH DEPARTMENT

Prepared by and return to:

James M. Donohoe, Jr., P.A.
5214-A SW 91st Drive
Gainesville, FL 32608-3006
352-371-3312
File Number: 05-075 Adams

Inst:2005021281 Date:08/31/2005 Time:13:29
Doc Stamp-Deed : 332.50
DC,P.DeWitt Cason,Columbia County B:1056 P:2488

[Space Above This Line For Recording Data]

Warranty Deed

This Warranty Deed made this 25th day of August, 2005 between **E Dwight Adams, a married man conveying non-homestead property ,** whose post office address is **2507 NW 24th Terrace, Gainesville, FL 32605**, grantor, and **G C Construction of Gainesville, Inc., a Florida Corporation,** whose post office address is **P.O. Box 5893, Gainesville, FL 32627**, grantee:

(Whenever used herein the terms "grantor" and "grantee" include all the parties to this instrument and the heirs, legal representatives, and assigns of individuals, and the successors and assigns of corporations, trusts and trustees)

Witnesseth, that said grantor, for and in consideration of the sum of TEN AND NO/100 DOLLARS ($10.00) and other good and valuable considerations to said grantor in hand paid by said grantee, the receipt whereof is hereby acknowledged, has granted, bargained, and sold to the said grantee, and grantee's heirs and assigns forever, the following described land, situate, lying and being in **Columbia County, Florida** to-wit:

> **Lot 45, of Replat of Lots 38, 45 and 46 of Santa Fe River Plantations, according to the map or plat thereof as recorded in Plat Book 5, Page(s) 13 through 13-D, Public Records of Columbia County, Florida.**
>
> **Parcel Identification Number: R10058-635**

Together with all the tenements, hereditaments and appurtenances thereto belonging or in anywise appertaining.

To Have and to Hold, the same in fee simple forever.

And the grantor hereby covenants with said grantee that the grantor is lawfully seized of said land in fee simple; that the grantor has good right and lawful authority to sell and convey said land; that the grantor hereby fully warrants the title to said land and will defend the same against the lawful claims of all persons whomsoever; and that said land is free of all encumbrances, except taxes accruing subsequent to **December 31, 2004**.

In Witness Whereof, grantor has hereunto set grantor's hand and seal the day and year first above written.

Signed, sealed and delivered in our presence:

Witness Name: Susan St. John

Witness Name: James M. Donohoe, Jr.

E. Dwight Adams (Seal)
E. Dwight Adams

State of Florida
County of Alachua

The foregoing instrument was acknowledged before me this 25th day of August, 2005 by E. Dwight Adams, who [_] is personally known or [✓] has produced a driver's license as identification.

[Notary Seal]

Notary Public

Printed Name: _____

My Commission Expires: _____

JAMES M. DONOHOE,JR.
MY COMMISSION # DD 207454
EXPIRES: February 23, 2009
1-800-3-NOTARY FL Notary Discount Assoc. Co

DoubleTime®

COLUMBIA COUNTY 9-1-1 ADDRESSING

P. O. Box 1787, Lake City, FL 32056-1787
PHONE: (386) 758-1125 * FAX: (386) 758-1365 * Email: ron_croft@columbiacountyfla.com

Addressing Maintenance

To maintain the Countywide Addressing Policy you must make application for a 9-1-1 Address at the time you apply for a building permit. The established standards for assigning and posting numbers to all principal buildings, dwellings, businesses and industries are contained in Columbia County Ordinance 2001-9. The addressing system is to enable Emergency Service Agencies to locate you in an emergency, and to assist the United States Postal Service and the public in the timely and efficient provision of services to residents and businesses of Columbia County.

DATE REQUESTED: 1/5/2006 **DATE ISSUED:** 1/18/2006

ENHANCED 9-1-1 ADDRESS:

362 SW THORNE LN

FORT WHITE FL 32038

PROPERTY APPRAISER PARCEL NUMBER:

30-7S-17-10058-635

Remarks:

LOT 45 SANTA FE RIVER PLANTATIONS REPLATE OF LOT 38

Address Issued By: _____
Columbia County 9-1-1 Addressing / GIS Department

NOTICE: THIS ADDRESS WAS ISSUED BASED ON LOCATION INFORMATION RECEIVED FROM THE REQUESTER. SHOULD, AT A LATER DATE, THE LOCATION INFORMATION BE FOUND TO BE IN ERROR, THIS ADDRESS IS SUBJECT TO CHANGE.

23

COLUMBIA COUNTY
9-1-1 ADDRESSING
APPROVED

2005-06

ALACHUA COUNTY OCCUPATIONAL LICENSE

MUST BE DISPLAYED IN A CONSPICUOUS PLACE

LICENSE EXPIRES 09/30/06

ACCOUNT NO.
1568

2332100003146

BUSINESS TYPE

233210 CONTRACTOR/SUB-CONTRACTOR

Tax Amount 131.25

BUSINESS ADDRESS

15544 NW 25TH TER
GAINESVILLE FL 326090000

G C CONSTRUCTION OF GAINESVILLE INC
GARY R CLEMMONS
PO BOX 5893
GAINESVILLE FL 32627

Base Amount 131.25
Penalties
Other
Amt Paid 131.25

Von Fraser
Alachua County
TAX COLLECTOR

PAID-4037043.0001-0001 16 08/10/2005 131.25

THIS OCCUPATIONAL LICENSE DOES NOT CONFIRM THAT REGULATORY ZONING REQUIREMENTS HAVE BEEN MET. IT IS THE OWNER'S RESPONSIBILITY TO ENSURE COMPLIANCE.

VON FRASER, TAX COLLECTOR
12 SE 1ST ST., GAINESVILLE, FL 32601
(352) 337-6227

AC# 1429156

STATE OF FLORIDA

DEPARTMENT OF BUSINESS AND PROFESSIONAL REGULATION
CONSTRUCTION INDUSTRY LICENSING BOARD

SEQ# L04053000051

DATE	BATCH NUMBER	LICENSE NBR
05/30/2004	030692016	CGC052925

The GENERAL CONTRACTOR
Named below IS CERTIFIED
Under the provisions of Chapter 489 FS.
Expiration date: AUG 31, 2006

CLEMMONS, GARY ROBERT
G C CONSTRUCTION OF GAINESVILLE INC
15544 NW 25TH TERR
P O BOX 5893
GAINESVILLE FL 32609

JEB BUSH

DIANE CARR
SECRETARY

TOM GALLAGHER
CHIEF FINANCIAL OFFICER

STATE OF FLORIDA
DEPARTMENT OF FINANCIAL SERVICES
DIVISION OF WORKERS' COMPENSATION

**** CERTIFICATE OF EXEMPTION FROM FLORIDA WORKERS' COMPENSATION LAW ****

CONSTRUCTION INDUSTRY EXEMPTION

This certifies that the individual listed below has elected to be exempt from Florida Workers' Compensation Law.

MEETS REISSUANCE REQUIREMENTS

EFFECTIVE DATE: 02/28/2005 ** EXPIRATION DATE: 02/28/2007

PERSON: CLEMMONS GARY R

FEIN: 200389328

BUSINESS NAME AND ADDRESS: G C CONSTRUCTION OF GAINESVILLE INC
P O BOX 5893
GAINESVILLE FL 32627

SCOPE OF BUSINESS OR TRADE: 1- CERTIFIED GENERAL CONTRACTOR

IMPORTANT: Pursuant to Chapter 440.05(14), F.S., an officer of a corporation who elects exemption from this chapter by filing a certificate of election under this section may not recover benefits or compensation under this chapter.

WC-252 CERTIFICATE OF ELECTION TO BE EXEMPT REVISED 01-04 QUESTIONS? (850) 413-1609

PLEASE CUT OUT THE CARD BELOW AND RETAIN FOR FUTURE REFERENCE

STATE OF FLORIDA
DEPARTMENT OF FINANCIAL SERVICES
DIVISION OF WORKERS' COMPENSATION

CONSTRUCTION INDUSTRY

CERTIFICATE OF EXEMPTION FROM FLORIDA WORKERS' COMPENSATION LAW

EFFECTIVE: 02/28/2005
** EXPIRATION DATE: 02/28/2007
PERSON: CLEMMONS GARY R
FEIN: 200389328
BUSINESS NAME AND ADDRESS: G C CONSTRUCTION OF GAINESVILLE
P O BOX 5893
GAINESVILLE FL 32627

MEETS REISSUANCE REQUIREMENTS

SCOPE OF BUSINESS OR TRADE:
1- CERTIFIED GENERAL CONTRACTOR

F O L D H E R E

IMPORTANT

Pursuant to Chapter 440.05(14), F.S., an officer of a corporation who elects exemption from this chapter by filing a certificate of election under this section may not recover benefits or compensation under this chapter.

QUESTIONS? (850) 413-1609

CUT HERE

*** Carry bottom portion on the job, keep upper portion for your records.**

CLYATT WELL DRILLING, INC.

(Established in 1971)
Post Office Box 180
Worthington Springs, FL 32697
Phone (386)496-2489 FAX (386)496-4640

WELL DESCRIPTION

DESCRIPTION DATE

CUSTOMER NAME AND ADDRESS

G.C. Construction
Attn.: Jessica
Post Office Box 5893
Gainesville, Florida 32627

DESCRIPTION OF WORK

4" Well and Pump
FAX #386-418-0527

DESCRIPTION

4" Well
1 HP Submersible Pump
1-1/4" Galvanized Drop Pipe
14/3 Submersible Pump Wire
81 Gallon Captive Air Tank
4 X 1-1/4 Well Seal
Pressure Relief Valve
Controls, Wire and Fittings
Sales Tax @ 7%

THANK YOU FOR YOUR BUSINESS! This document is provided to give a description of the well to be constructed on your behalf. All materials remain the property of Clyatt Well Drilling, Inc., until paid for in full. Clyatt Well Drilling, Inc., does not agree to find or develop water, nor does it represent, warrant or guarantee the quality or kind of water which may be encountered. If it is necessary to install water filters, the owner agrees it is his/her responsibility to pay the cost. Right to repossess is granted if payment for well is not made.

FORM 600A-2004 EnergyGauge® 4.0

FLORIDA ENERGY EFFICIENCY CODE FOR BUILDING CONSTRUCTION

Florida Department of Community Affairs

Residential Whole Building Performance Method A

Project Name:	**G.C. Construction -Lot #45**	Builder:	
Address:		Permitting Office:	
City, State:	,	Permit Number:	
Owner:		Jurisdiction Number:	
Climate Zone:	**North**		

1. New construction or existing	New	
2. Single family or multi-family	Single family	
3. Number of units, if multi-family	1	
4. Number of Bedrooms	3	
5. Is this a worst case?	Yes	
6. Conditioned floor area (ft²)	1434 ft²	
7. Glass type[1] and area: (Label reqd. by 13-104.4.5 if not default)		
a. U-factor:	Description Area	
(or Single or Double DEFAULT) 7a.	(Dble Default) 143.0 ft²	
b. SHGC:		
(or Clear or Tint DEFAULT) 7b.	(Clear) 143.0 ft²	
8. Floor types		
a. Slab-On-Grade Edge Insulation	R=0.0, 176.0(p) ft	
b. N/A		
c. N/A		
9. Wall types		
a. Frame, Wood, Exterior	R=13.0, 1144.0 ft²	
b. Frame, Wood, Adjacent	R=13.0, 264.0 ft²	
c. N/A		
d. N/A		
e. N/A		
10. Ceiling types		
a. Under Attic	R=30.0, 1434.0 ft²	
b. N/A		
c. N/A		
11. Ducts		
a. Sup: Unc. Ret: Unc. AH: Interior	Sup. R=6.0, 186.0 ft	
b. N/A		

12. Cooling systems		
a. Central Unit	Cap: 42.0 kBtu/hr	
	SEER: 13.00	
b. N/A		
c. N/A		
13. Heating systems		
a. Electric Heat Pump	Cap: 42.0 kBtu/hr	
	HSPF: 8.40	
b. N/A		
c. N/A		
14. Hot water systems		
a. Electric Resistance	Cap: 50.0 gallons	
	EF: 0.90	
b. N/A		
c. Conservation credits (HR-Heat recovery, Solar DHP-Dedicated heat pump)		
15. HVAC credits (CF-Ceiling fan, CV-Cross ventilation, HF-Whole house fan, PT-Programmable Thermostat, MZ-C-Multizone cooling, MZ-H-Multizone heating)		

Glass/Floor Area: 0.10

Total as-built points: 19461
Total base points: 23632

PASS

I hereby certify that the plans and specifications covered by this calculation are in compliance with the Florida Energy Code.

PREPARED BY: _____

DATE: 12-27-05

I hereby certify that this building, as designed, is in compliance with the Florida Energy Code.

OWNER/AGENT: _____

DATE: _____

Review of the plans and specifications covered by this calculation indicates compliance with the Florida Energy Code. Before construction is completed this building will be inspected for compliance with Section 553.908 Florida Statutes.

GREAT SEAL OF THE STATE OF FLORIDA · IN GOD WE TRUST

BUILDING OFFICIAL: _____

DATE: _____

1 Predominant glass type. For actual glass type and areas, see Summer & Winter Glass output on pages 2&4.

SUMMER CALCULATIONS

Residential Whole Building Performance Method A - Details

ADDRESS: , , , PERMIT #:

BASE				AS-BUILT							
GLASS TYPES .18 X Conditioned Floor Area	X BSPM	= Points		Type/SC	Overhang Ornt	Len	Hgt	Area X	SPM X	SOF	= Points
.18	1434.0	20.04	5172.7	Double, Clear	E	0.0	0.0	60.0	42.06	1.00	2523.8
				Double, Clear	S	0.0	0.0	19.0	35.87	1.00	681.5
				Double, Clear	W	0.0	0.0	30.0	38.52	1.00	1155.7
				Double, Clear	N	0.0	0.0	34.0	19.20	1.00	652.8
				As-Built Total:				**143.0**			**5013.8**

WALL TYPES	Area X	BSPM	= Points	Type	R-Value	Area X	SPM	= Points
Adjacent	264.0	0.70	184.8	Frame, Wood, Exterior	13.0	1144.0	1.50	1716.0
Exterior	1144.0	1.70	1944.8	Frame, Wood, Adjacent	13.0	264.0	0.60	158.4
Base Total:	**1408.0**		**2129.6**	**As-Built Total:**		**1408.0**		**1874.4**

DOOR TYPES	Area X	BSPM	= Points	Type	Area X	SPM	= Points
Adjacent	20.0	2.40	48.0	Exterior Insulated	30.0	4.10	123.0
Exterior	30.0	6.10	183.0	Adjacent Insulated	20.0	1.60	32.0
Base Total:	**50.0**		**231.0**	**As-Built Total:**	**50.0**		**155.0**

CEILING TYPES	Area X	BSPM	= Points	Type	R-Value	Area X	SPM X SCM	= Points
Under Attic	1434.0	1.73	2480.8	Under Attic	30.0	1434.0	1.73 X 1.00	2480.8
Base Total:	**1434.0**		**2480.8**	**As-Built Total:**		**1434.0**		**2480.8**

FLOOR TYPES	Area X	BSPM	= Points	Type	R-Value	Area X	SPM	= Points
Slab	176.0(p)	-37.0	-6512.0	Slab-On-Grade Edge Insulation	0.0	176.0(p	-41.20	-7251.2
Raised	0.0	0.00	0.0					
Base Total:			**-6512.0**	**As-Built Total:**		**176.0**		**-7251.2**

INFILTRATION	Area X	BSPM	= Points	Area X	SPM	= Points
	1434.0	10.21	14641.1	1434.0	10.21	14641.1

SUMMER CALCULATIONS

Residential Whole Building Performance Method A - Details

ADDRESS: , , ,	PERMIT #:

BASE				AS-BUILT							
Summer Base Points: 18143.3				**Summer As-Built Points:**							**16914.0**
Total Summer Points	X System Multiplier	=	Cooling Points	Total Component (System - Points)	X Cap Ratio	X Duct Multiplier (DM x DSM x AHU)	X System Multiplier	X Credit Multiplier	= Cooling Points		
				(sys 1: Central Unit 42000 btuh ,SEER/EFF(13.0) Ducts:Unc(S),Unc(R),Int(AH),R6.0(INS)							
				16914	1.00	(1.09 x 1.147 x 0.91)	0.263	1.000	5052.1		
18143.3	**0.4266**		**7739.9**	**16914.0**	**1.00**	**1.138**	**0.263**	**1.000**	**5052.1**		

WINTER CALCULATIONS

Residential Whole Building Performance Method A - Details

ADDRESS: , , , PERMIT #:

BASE				AS-BUILT							
GLASS TYPES .18 X Conditioned Floor Area		X BWPM	= Points	Type/SC	Overhang Ornt	Len	Hgt	Area	X WPM	X WOF	= Points
.18	1434.0	12.74	3288.4	Double, Clear	E	0.0	0.0	60.0	18.79	1.00	1127.6
				Double, Clear	S	0.0	0.0	19.0	13.30	1.00	252.6
				Double, Clear	W	0.0	0.0	30.0	20.73	1.00	621.8
				Double, Clear	N	0.0	0.0	34.0	24.58	1.00	835.6
				As-Built Total:				**143.0**			**2837.7**
WALL TYPES	Area	X BWPM	= Points	Type		R-Value		Area	X WPM		= Points
Adjacent	264.0	3.60	950.4	Frame, Wood, Exterior		13.0		1144.0	3.40		3889.6
Exterior	1144.0	3.70	4232.8	Frame, Wood, Adjacent		13.0		264.0	3.30		871.2
Base Total:	**1408.0**		**5183.2**	**As-Built Total:**				**1408.0**			**4760.8**
DOOR TYPES	Area	X BWPM	= Points	Type				Area	X WPM		= Points
Adjacent	20.0	11.50	230.0	Exterior Insulated				30.0	8.40		252.0
Exterior	30.0	12.30	369.0	Adjacent Insulated				20.0	8.00		160.0
Base Total:	**50.0**		**599.0**	**As-Built Total:**				**50.0**			**412.0**
CEILING TYPES	Area	X BWPM	= Points	Type		R-Value		Area	X WPM	X WCM	= Points
Under Attic	1434.0	2.05	2939.7	Under Attic		30.0		1434.0	2.05	X 1.00	2939.7
Base Total:	**1434.0**		**2939.7**	**As-Built Total:**				**1434.0**			**2939.7**
FLOOR TYPES	Area	X BWPM	= Points	Type		R-Value		Area	X WPM		= Points
Slab	176.0(p)	8.9	1566.4	Slab-On-Grade Edge Insulation		0.0		176.0(p	18.80		3308.8
Raised	0.0	0.00	0.0								
Base Total:			**1566.4**	**As-Built Total:**				**176.0**			**3308.8**
INFILTRATION	Area	X BWPM	= Points					Area	X WPM		= Points
	1434.0	-0.59	-846.1					1434.0	-0.59		-846.1

WINTER CALCULATIONS

Residential Whole Building Performance Method A - Details

ADDRESS: , , ,	PERMIT #:

BASE				AS-BUILT							
Winter Base Points:			**12730.7**	**Winter As-Built Points:**							**13412.9**
Total Winter Points	X	System Multiplier	= Heating Points	Total Component (System - Points)	X	Cap Ratio	X Duct Multiplier (DM x DSM x AHU)	X System Multiplier	X	Credit Multiplier	= Heating Points
				(sys 1: Electric Heat Pump 42000 btuh ,EFF(8.4) Ducts:Unc(S),Unc(R),Int(AH),R6.0							
				13412.9		1.000	(1.069 x 1.169 x 0.93)	0.406		1.000	6328.1
12730.7		**0.6274**	**7987.2**	**13412.9**		**1.00**	**1.162**	**0.406**		**1.000**	**6328.1**

WATER HEATING & CODE COMPLIANCE STATUS

Residential Whole Building Performance Method A - Details

ADDRESS: , , ,	PERMIT #:

BASE				AS-BUILT							
WATER HEATING											
Number of Bedrooms	X	Multiplier	= Total	Tank Volume	EF	Number of Bedrooms	X Tank Ratio	X Multiplier	X Credit Multiplier	= Total	
3		2635.00	7905.0	50.0	0.90	3	1.00	2693.56	1.00	8080.7	
				As-Built Total:						**8080.7**	

CODE COMPLIANCE STATUS

BASE				AS-BUILT			
Cooling Points +	Heating Points +	Hot Water Points =	Total Points	Cooling Points +	Heating Points +	Hot Water Points =	Total Points
7740	**7987**	**7905**	**23632**	**5052**	**6328**	**8081**	**19461**

PASS

Code Compliance Checklist

Residential Whole Building Performance Method A - Details

ADDRESS: , , ,	PERMIT #:

6A-21 INFILTRATION REDUCTION COMPLIANCE CHECKLIST

COMPONENTS	SECTION	REQUIREMENTS FOR EACH PRACTICE	CHECK
Exterior Windows & Doors	606.1.ABC.1.1	Maximum:.3 cfm/sq.ft. window area; .5 cfm/sq.ft. door area.	
Exterior & Adjacent Walls	606.1.ABC.1.2.1	Caulk, gasket, weatherstrip or seal between: windows/doors & frames, surrounding wall; foundation & wall sole or sill plate; joints between exterior wall panels at corners; utility penetrations; between wall panels & top/bottom plates; between walls and floor. EXCEPTION: Frame walls where a continuous infiltration barrier is installed that extends from, and is sealed to, the foundation to the top plate.	
Floors	606.1.ABC.1.2.2	Penetrations/openings >1/8" sealed unless backed by truss or joint members. EXCEPTION: Frame floors where a continuous infiltration barrier is installed that is sealed to the perimeter, penetrations and seams.	
Ceilings	606.1.ABC.1.2.3	Between walls & ceilings; penetrations of ceiling plane of top floor; around shafts, chases, soffits, chimneys, cabinets sealed to continuous air barrier; gaps in gyp board & top plate; attic access. EXCEPTION: Frame ceilings where a continuous infiltration barrier is installed that is sealed at the perimeter, at penetrations and seams.	
Recessed Lighting Fixtures	606.1.ABC.1.2.4	Type IC rated with no penetrations, sealed; or Type IC or non-IC rated, installed inside a sealed box with 1/2" clearance & 3" from insulation; or Type IC rated with < 2.0 cfm from conditioned space, tested.	
Multi-story Houses	606.1.ABC.1.2.5	Air barrier on perimeter of floor cavity between floors.	
Additional Infiltration reqts	606.1.ABC.1.3	Exhaust fans vented to outdoors, dampers; combustion space heaters comply with NFPA, have combustion air.	

6A-22 OTHER PRESCRIPTIVE MEASURES (must be met or exceeded by all residences.)

COMPONENTS	SECTION	REQUIREMENTS	CHECK
Water Heaters	612.1	Comply with efficiency requirements in Table 612.1.ABC.3.2. Switch or clearly marked cir breaker (electric) or cutoff (gas) must be provided. External or built-in heat trap required.	
Swimming Pools & Spas	612.1	Spas & heated pools must have covers (except solar heated). Non-commercial pools must have a pump timer. Gas spa & pool heaters must have a minimum thermal efficiency of 78%.	
Shower heads	612.1	Water flow must be restricted to no more than 2.5 gallons per minute at 80 PSIG.	
Air Distribution Systems	610.1	All ducts, fittings, mechanical equipment and plenum chambers shall be mechanically attached, sealed, insulated, and installed in accordance with the criteria of Section 610. Ducts in unconditioned attics: R-6 min. insulation.	
HVAC Controls	607.1	Separate readily accessible manual or automatic thermostat for each system.	
Insulation	604.1, 602.1	Ceilings-Min. R-19. Common walls-Frame R-11 or CBS R-3 both sides. Common ceiling & floors R-11.	

ENERGY PERFORMANCE LEVEL (EPL) DISPLAY CARD

ESTIMATED ENERGY PERFORMANCE SCORE* = 86.4

The higher the score, the more efficient the home.

, , , ,

1.	New construction or existing	New	__
2.	Single family or multi-family	Single family	__
3.	Number of units, if multi-family	1	__
4.	Number of Bedrooms	3	__
5.	Is this a worst case?	Yes	__
6.	Conditioned floor area (ft²)	1434 ft²	__
7.	Glass type[1] and area: (Label reqd. by 13-104.4.5 if not default)		
a.	U-factor: (or Single or Double DEFAULT) 7a.	Description Area (Dble Default) 143.0 ft²	__
b.	SHGC: (or Clear or Tint DEFAULT) 7b.	(Clear) 143.0 ft²	__
8.	Floor types		
a.	Slab-On-Grade Edge Insulation	R=0.0, 176.0(p) ft	__
b.	N/A		__
c.	N/A		__
9.	Wall types		
a.	Frame, Wood, Exterior	R=13.0, 1144.0 ft²	__
b.	Frame, Wood, Adjacent	R=13.0, 264.0 ft²	__
c.	N/A		__
d.	N/A		__
e.	N/A		__
10.	Ceiling types		
a.	Under Attic	R=30.0, 1434.0 ft²	__
b.	N/A		__
c.	N/A		__
11.	Ducts		
a.	Sup: Unc. Ret: Unc. AH: Interior	Sup. R=6.0, 186.0 ft	__
b.	N/A		__
12.	Cooling systems		
a.	Central Unit	Cap: 42.0 kBtu/hr	__
		SEER: 13.00	__
b.	N/A		__
			__
c.	N/A		__
			__
13.	Heating systems		
a.	Electric Heat Pump	Cap: 42.0 kBtu/hr	__
		HSPF: 8.40	__
b.	N/A		__
			__
c.	N/A		__
			__
14.	Hot water systems		
a.	Electric Resistance	Cap: 50.0 gallons	__
		EF: 0.90	__
b.	N/A		__
			__
c.	Conservation credits (HR-Heat recovery, Solar DHP-Dedicated heat pump)		__
15.	HVAC credits (CF-Ceiling fan, CV-Cross ventilation, HF-Whole house fan, PT-Programmable Thermostat, MZ-C-Multizone cooling, MZ-H-Multizone heating)		__

I certify that this home has complied with the Florida Energy Efficiency Code For Building Construction through the above energy saving features which will be installed (or exceeded) in this home before final inspection. Otherwise, a new EPL Display Card will be completed based on installed Code compliant features.

Builder Signature: _____ Date: _____

Address of New Home: _____ City/FL Zip: _____

**NOTE: The home's estimated energy performance score is only available through the FLA/RES computer program. This is not a Building Energy Rating. If your score is 80 or greater (or 86 for a US EPA/DOE EnergyStar™ designation), your home may qualify for energy efficiency mortgage (EEM) incentives if you obtain a Florida Energy Gauge Rating. Contact the Energy Gauge Hotline at 321/638-1492 or see the Energy Gauge web site at www.fsec.ucf.edu for information and a list of certified Raters. For information about Florida's Energy Efficiency Code For Building Construction, contact the Department of Community Affairs at 850/487-1824.*

1 Predominant glass type. For actual glass type and areas, see Summer & Winter Glass output on pages 2&4.

GC Construction of Gainesville, Inc.
PO Box 5893
Gainesville, FL 32609
386-418-2114 – Phone / 386-418-0527 - Fax (386) 754-7088

FAX

Date: 1-20-06
To: Columbia County Building Department
Regarding: Permit Application # 0601-31
Attn: Joe Haltiwanger

Joe,

I am sending you the 911 address information for our property. This should complete our checklist,

Please let me know if you need anything further.

Thanks,
Jessica

GEO-TECH, INC.

Engineering Consultants in Geotechnical • Environmental • Construction Materials Testing

FIELD DENSITY WORKSHEET

CLIENT GC Constr

DATE 2-27-06

PROJECT NO.

PROJECT NAME Thorne lane

PERMIT NO. 00002 4067

EARTH CONTRACTOR 362 Sw Thorne lane

TESTED BY RR

COMPACTION REQUIREMENT (%) 95

☐ Standard Proctor
☑ Modified Proctor

FIELD CONTACT

TOTAL ON-SITE TIME

MILES FROM OFFICE

☐ Limerock ☐ Subgrade ☐ Pipe Backfill ☑ Building Pad ☐ Building Footing ☐ Other

TEST LOCATION	LAB PROCTOR DENS.	LAB PROCTOR OMC	TEST DEPTH	PROBE DEPTH	% MOIST.	WET DENSITY (PCF)	DRY DENSITY (PCF)	% COMP.
Center of Pad	107.3	11.2	FG	12"	6.1	109.0	102.7	95.7
N. Side of Pad	↓	↓	↓	↓	4.8	108.0	103.1	96.0
S Side of Pad	↓	↓	↓	↓	5.7	108.3	102.5	95.5
				24067				

REMARKS

* Density failed to meet minimum project requirement

** Retest indicates minimum density requirement was obtained.

( ) Client is aware of unsatisfactory test results.

4000 SW 35TH TERRACE, SUITE C • GAINESVILLE, FLORIDA 32608 • PHONE: (352) 372-1274 • FAX: (352) 372-2721

From: The Columbia County Building Department
Plans Review
135 NE Hernando Av.
P. O Box 1529
Lake City Florida, 32056-1529

Reference to: Build permit application Number: 0601-31

G C Construction owner Gary Clemmons lot 45 of Santa Fe River Plantations

On the date of January 17, 2006 application 0601-31 and plans for construction of a single family dwelling were reviewed and the following information or alteration to the plans will be required to continue processing this application. If you should have any question please contact the above address, or contact phone number (386) 758-1163 or fax any information to (386) 754-7088.

Please include application number 0601-31 when making reference to this application.

1. Please provided a recorded deed showing proof of ownership for lot 45 of Santa Fe River Plantations

2. Please have Mr. Marty Eskridge supply the following information, show all required connectors with uplift rating for the truss system and required number and size of fasteners for continuous tie from roof to foundation. These connection points shall be designed by a Windload engineer using the engineered roof truss plans.

Thank you,

Joe Haltiwanger
Plan Examiner
Columbia County Building Department

Sterling Model

Windows				Attachments			
TYPE	MANUFACTURER	SERIES	SIZE	JAMB-TYPE/SPACING	HEADER TYPE/SPACING	SILLS TYPE/SPACING	MULLIONS
Single Hung	AWT	3950	3050	1¾" roofing nail 6" in corners	1¾" roofing nail & 8" in field →	1¾" roofing nail →	
" "	" "	3950	6050	" "	" "	" "	
" "	" "	3950	2030	" "	" "	" "	

Doors				Attachment of Frame			
TYPE	MANUFACTURER	SERIES	SIZE	JAMB	HEADER	SILL	
Garage Door	Gadco	7400	8' x 16'	⅜"x3" lag screw → 1" OD washer → spaced 24" on center	max inspring 12"		
Insulated steel	Therma Tru	Steel	3068	#10 x 2½" 6" at corners & 14.1 in field	#8 x 2½"	3/16" Tapcon x 1.75"	

DUCT SYSTEM SUMMARY
Entire House

New Age Dimensions

Job: Santa Fe River Plantations
Lot #45 12/10/05

17600 S.E. 28th Court, Summerfield, FL 34491-7571 Phone: (352) 307-0692 Fax: (352) 307-9149 Email: www.NewAgeDimension@aol.com

Project Information

For: Newmans Htg. & A/C
P.O. Box 5425, Gainesville, FL 32602
Phone: (352) 375-8555 Fax: (352) 375-0275

	HEATING	COOLING
External Static Pressure:	0.53 in H2O	0.53 in H2O
Pressure Losses:	0.12 in H2O	0.12 in H2O
Available Static Pressure:	0.41 in H2O	0.41 in H2O
Friction Rate:	0.880 in/100ft	0.880 in/100ft
Actual AVF:	1200 cfm	1200 cfm

Total Effective Length (TEL): 0 ft

Supply Branch Detail Table

Name	Htg (Btuh)	Clg (Btuh)	Htg (cfm)	Clg (cfm)	Dsn FR	Vel (fpm)	Dia (in)	Rect Sz (in)	Duct Matl	Trnk
Laundry Room	2209	2336	87	128	0.880	653	6	0x 0	VIFx	st1
Dining Room	4935	3267	195	179	0.880	559	8	0x 0	VIFx	st1
Bedroom #3	2412	2672	95	147	0.880	548	7	0x 0	VIFx	st1
Bed #3 WIC	669	226	26	12	0.880	303	4	0x 0	VIFx	st1
Bed #2 WIC	422	159	17	9	0.880	191	4	0x 0	VIFx	st1
Bedroom #2	2490	1900	98	104	0.880	531	6	0x 0	VIFx	st1
Hall Bathroom	88	102	3	6	0.880	64	4	0x 0	VIFx	st1
Kitchen	2404	2682	95	147	0.880	550	7	0x 0	VIFx	st2
Family Room	3608	1920	143	105	0.880	533	7	0x 0	VIFx	st2
Family Room-A	3607	1920	143	105	0.880	533	7	0x 0	VIFx	st2
Master WIC	76	88	3	5	0.880	55	4	0x 0	VIFx	st2
Master Bathroom	935	416	37	23	0.880	423	4	0x 0	VIFx	st2
Master Bedroom-A	3257	2095	129	115	0.880	655	6	0x 0	VIFx	st2
Master Bedroom	3257	2095	129	115	0.880	655	6	0x 0	VIFx	st2

Supply Trunk Detail Table

Name	Trunk Type	Htg (cfm)	Clg (cfm)	Vel (fpm)	Diam (in)	Rect Duct Size (in)	Duct Material	Trunk
st1	Peak AVF	523	585	702	12	10 x 12	RectFbg	st
st2	Peak AVF	677	615	697	12	14 x 10	RectFbg	st
st	Peak AVF	1200	1200	823	16	15 x 14	RectFbg	

Return Branch Detail Table

Name	Diffus Sz (in)	Design AVF (cfm)	Design (in H2O)	Design FR	Vel (fpm)	Dia (in)	Rect Sz (in)	Stud/Joist Opening (in)	Duct Matl	Trunk
rb1	25 x ~~8~~ 10 ~~24~~	943	0.00	0.880	675	16	0 x 0		VIFx	ra
rb2	14 x 14 ~~13~~	297	0.00	0.880	673	9	0 x 0		VIFx	ra

Return Trunk Detail Table

Name	Trunk Type	Htg (cfm)	Clg (cfm)	Vel (fpm)	Diam (in)	Rect Duct Sz (in)	Duct Material	Trunk
ra	Peak AVF	1200	1200	600	18	18 x 15 ~~18~~	RectFbg	

RIGHT-J SHORT FORM
Entire House

New Age Dimensions

Job: Santa Fe River Plantations
Lot #45 12/10/05

17600 S.E. 28th Court, Summerfield, FL 34491-7571 Phone: (352) 307-0692 Fax: (352) 307-9149 Email: www.NewAgeDimension@aol.com

Project Information

For: Newmans Htg. & A/C
P.O. Box 5425, Gainesville, FL 32602
Phone: (352) 375-8555 Fax: (352) 375-0275

Design Information

	Htg	Clg
Outside db (°F)	33	94
Inside db (°F)	70	75
Design TD (°F)	37	19
Daily range	-	M
Inside humidity (%)	-	50
Moisture difference (gr/lb)	-	48

Infiltration

Method	Simplified
Construction quality	Average
Fireplaces	0

HEATING EQUIPMENT

Make Goodman Mfg.
Trade Janitrol, GMC, Franklin
CPKJ36-1A

Efficiency	7.8 HSPF	
Heating input		
Heating output	35000	Btuh @ 47°F
Heating temperature rise	27	°F
Actual heating fan	1200	cfm
Heating air flow factor	0.040	cfm/Btuh

Space thermostat

COOLING EQUIPMENT

Make Goodman Mfg.
Trade Janitrol, GMC, Franklin
CPKJ36-1A
A42-XX

Efficiency	12.0 SEER	
Sensible cooling	25752	Btuh
Latent cooling	11037	Btuh
Total cooling	36789	Btuh
Actual cooling fan	1200	cfm
Cooling air flow factor	0.055	cfm/Btuh
Load sensible heat ratio	69	%

ROOM NAME	Area (ft²)	Htg load (Btuh)	Clg load (Btuh)	Htg AVF (cfm)	Clg AVF (cfm)
Laundry Room	70	2209	2336	87	128
Dining Room	168	4935	3267	195	179
Bedroom #3	127	2412	2672	95	147
Bed #3 WIC	25	669	226	26	12
Bed #2 WIC	30	422	159	17	9
Bedroom #2	138	2490	1900	98	104
Hall Bathroom	66	88	102	3	6
Kitchen	223	2404	2682	95	147
Family Room	306	7215	3840	285	211
Master WIC	56	76	88	3	5
Master Bathroom	41	935	416	37	23
Master Bedroom	185	6513	4191	257	230

Printout certified by ACCA to meet all requirements of Manual J 7th Ed.

Entire House d Ventilation air Equip. @ 0.99 RSM Latent cooling	1434	30367 0	21879 0 21660 9620	1200	1200
TOTALS	1434	30367	31280	1200	1200

Printout certified by ACCA to meet all requirements of Manual J 7th Ed.

GC Construction

COLUMBIA COUNTY BUILDING DEPARTMENT

RESIDENTIAL MINIMUM PLAN REQUIREMENTS AND CHECKLIST FOR FLORIDA BUILDING CODE 2001
ONE (1) AND TWO (2) FAMILY DWELLINGS

ALL REQUIREMENTS ARE SUBJECT TO CHANGE
EFFECTIVE MARCH 1, 2002

ALL BUILDING PLANS MUST INDICATE THE FOLLOWING ITEMS AND INDICATE COMPLIANCE WITH CHAPTER 1606 OF THE FLORIDA BUILDING CODE 2001 BY PROVIDING CALCULATIONS AND DETAILS THAT HAVE THE SEAL AND SIGNATURE OF A CERTIFIED ARCHITECT OR ENGINEER REGISTERED IN THE STATE OF FLORIDA, OR ALTERNATE METHODOLOGIES, APPROVED BY THE STATE OF FLORIDA BUILDING COMMISSION FOR ONE-AND-TWO FAMILY DWELLINGS. FOR DESIGN PURPOSES THE FOLLOWING BASIC WIND SPEED AS PER FIGURE 1606 SHALL BE USED.

WIND SPEED LINE SHALL BE DEFINED AS FOLLOWS: THE CENTERLINE OF INTERSTATE 75.

1. ALL BUILDINGS CONSTRUCTED EAST OF SAID LINE SHALL BE -------- 100 MPH
2. ALL BUILDINGS CONSTRUCTED WEST OF SAID LINE SHALL BE --------110 MPH
3. NO AREA IN COLUMBIA COUNTY IS IN A WIND BORNE DEBRIS REGION

APPLICANT – PLEASE CHECK ALL APPLICABLE BOXES BEFORE SUBMITTAL

GENERAL REQUIREMENTS; Two (2) complete sets of plans containing the following:

Applicant	Plans Examiner	
☑	☐	All drawings must be clear, concise and drawn to scale ("Optional " details that are not used shall be marked void or crossed off). Square footage of different areas shall be shown on plans.
☑	☐	Designers name and signature on document (FBC 104.2.1). If licensed architect or engineer, official seal shall be affixed.
☑	☐	**Site Plan including:** a) Dimensions of lot b) Dimensions of building set backs c) Location of all other buildings on lot, well and septic tank if applicable, and all utility easements. d) Provide a full legal description of property.
☑	☐	**Wind-load Engineering Summary, calculations and any details required** a) Plans or specifications must state compliance with FBC Section 1606 b) The following information must be shown as per section 1606.1.7 FBC a. Basic wind speed (MPH) b. Wind importance factor (I) and building category c. Wind exposure – if more than one wind exposure is used, the wind exposure and applicable wind direction shall be indicated d. The applicable internal pressure coefficient e. Components and Cladding. The design wind pressure in terms of psf (kN/m^2), to be used for the design of exterior component and cladding materials not specifically designed by the registered design professional
☑	☐	**Elevations including:**
☑	☐	a) All sides
☑	☐	b) Roof pitch
☑	☐	c) Overhang dimensions and detail with attic ventilation
☑	☐	d) Location, size and height above roof of chimneys
☑	☐	e) Location and size of skylights
☑	☐	f) Building height
☑	☐	e) Number of stories

Floor Plan including:

- ☑ ☐ a) Rooms labeled and dimensioned
- ☑ ☐ b) Shear walls
- ☑ ☐ c) Windows and doors (including garage doors) showing size, mfg., approval listing and attachment specs. (FBC 1707) and safety glazing where needed (egress windows in bedrooms to be shown)
- ☐ N/A ☐ d) Fireplaces (gas appliance) (vented or non-vented) or wood burning with hearth
- ☐ N/A ☐ e) Stairs with dimensions (width, tread and riser) and details of guardrails and handrails
- ☐ N/A ☐ f) Must show and identify accessibility requirements (accessible bathroom)

Foundation Plan including:

- ☑ ☐ a) Location of all load-bearing wall with required footings indicated as standard Or monolithic and dimensions and reinforcing
- ☑ ☐ b) All posts and/or column footing including size and reinforcing
- ☑ ☐ c) Any special support required by soil analysis such as piling
- ☐ N/A ☐ d) Location of any vertical steel

Roof System:

- ☑ ☐ a) Truss package including:
  1. Truss layout and truss details signed and sealed by Fl. Pro. Eng.
  2. Roof assembly (FBC 104.2.1 Roofing system, materials, manufacturer, fastening requirements and product evaluation with wind resistance rating)
- ☑ ☐ b) Conventional Framing Layout including:
  1. Rafter size, species and spacing
  2. Attachment to wall and uplift
  3. Ridge beam sized and valley framing and support details
  4. Roof assembly (FBC 104.2.1 Roofing systems, materials, manufacturer, fastening requirements and product evaluation with wind resistance rating)

Wall Sections including:

- ☐ N/A ☐ a) Masonry wall
  1. All materials making up wall
  2. Block size and mortar type with size and spacing of reinforcement
  3. Lintel, tie-beam sizes and reinforcement
  4. Gable ends with rake beams showing reinforcement or gable truss and wall bracing details
  5. All required connectors with uplift rating and required number and size of fasteners for continuous tie from roof to foundation
  6. Roof assembly shown here or on roof system detail (FBC 104.2.1 Roofing system, materials, manufacturer, fastening requirements and product evaluation with resistance rating)
  7. Fire resistant construction (if required)
  8. Fireproofing requirements
  9. Shoe type of termite treatment (termicide or alternative method)
  10. Slab on grade
      a. Vapor retardant (6mil. Polyethylene with joints lapped 6 inches and sealed)
      b. Must show control joints, synthetic fiber reinforcement or Welded fire fabric reinforcement and supports
  11. Indicate where pressure treated wood will be placed
  12. Provide insulation R value for the following:
      a. Attic space
      b. Exterior wall cavity
      c. Crawl space (if applicable)

☑ ☐ **b) Wood frame wall**

1. All materials making up wall
2. Size and species of studs
3. Sheathing size, type and nailing schedule
4. Headers sized
5. Gable end showing balloon framing detail or gable truss and wall hinge bracing detail
6. All required fasteners for continuous tie from roof to foundation (truss anchors, straps, anchor bolts and washers)
7. Roof assembly shown here or on roof system detail (FBC104.2.1 Roofing system, materials, manufacturer, fastening requirements and product evaluation with wind resistance rating)
8. Fire resistant construction (if applicable)
9. Fireproofing requirements
10. Show type of termite treatment (termicide or alternative method)
11. Slab on grade
    a. Vapor retardant (6Mil. Polyethylene with joints lapped 6 inches and sealed
    b. Must show control joints, synthetic fiber reinforcement or welded wire fabric reinforcement and supports
12. Indicate where pressure treated wood will be placed
13. Provide insulation R value for the following:
    a. Attic space
    b. Exterior wall cavity
    c. Crawl space (if applicable)

N/A ☐ c) Metal frame wall and roof (designed, signed and sealed by Florida Prof. Engineer or Architect)

Floor Framing System:

N/A ☐ a) Floor truss package including layout and details, signed and sealed by Florida Registered Professional Engineer

☐ b) Floor joist size and spacing

☐ c) Girder size and spacing

☐ d) Attachment of joist to girder

☐ e) Wind load requirements where applicable

☑ ☐ **Plumbing Fixture layout**

Electrical layout including:

☑ ☐ a) Switches, outlets/receptacles, lighting and all required GFCI outlets identified

☑ ☐ b) Ceiling fans

☑ ☐ c) Smoke detectors

☑ ☐ d) Service panel and sub-panel size and location(s)

☑ ☐ e) Meter location with type of service entrance (overhead or underground)

☑ ☐ f) Appliances and HVAC equipment

☑ ☐ g) Arc Fault Circuits (AFCI) in bedrooms

HVAC information

☑ ☐ a) Manual J sizing equipment or equivalent computation

☑ ☐ b) Exhaust fans in bathroom

☑ ☐ **Energy Calculations** (dimensions shall match plans)

N/A ☐ **Gas System** Type (LP or Natural) Location and BTU demand of equipment

☐ ☐ 2 **Disclosure Statement for Owner Builders**

☑ ☐ ***Notice Of Commencement Required Before Any Inspections Will Be Done**

☑ ☐ **Private Potable Water**

a) Size of pump motor

b) Size of pressure tank

c) Cycle stop valve if used

LOT 45

5/12 18" OH 37 PSF 120 MPH

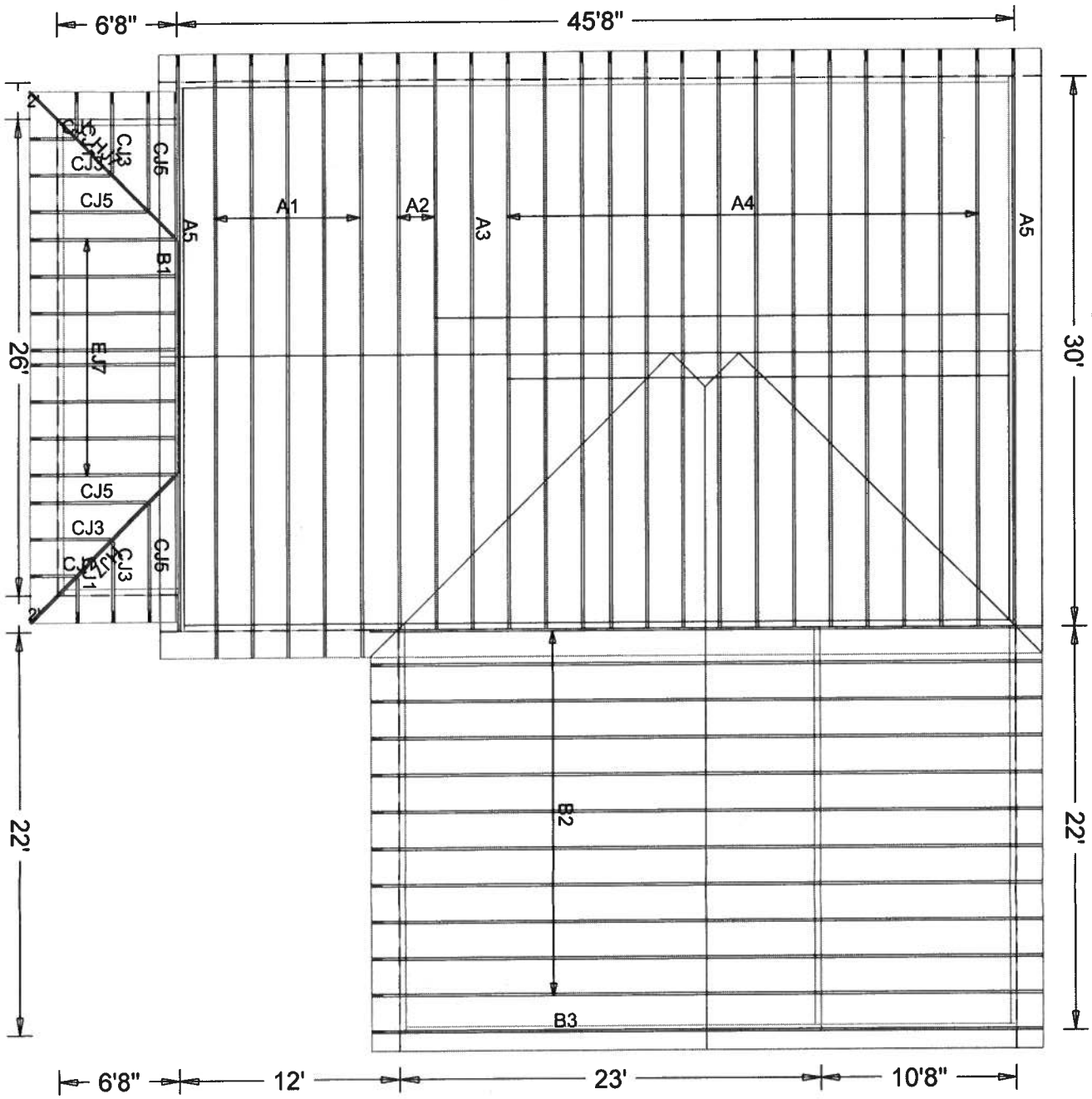

PAGE NO: 1 OF 1	JOB NO: GC11	DESIGNED BY: SAMPLE DESIGNER	JOB DESCRIPTION:	JOB LOCATION:

RESIDENTIAL WIND DESIGN & ANALYSIS

[illegible] SECTION 1606 \ V=110 \ ***NO COPIES ARE TO BE PERMITTED***

PREPARED FOR:

G. C. CONSTRUCTION \ LOT 45 SANTAFE RIVER PLANTATIONS

PREPARED BY:

MARTY R. ESKRIDGE
14952 MAIN ST
ALACHUA FL 32615
386-462-1340 / 352-375-6329

SUMMARY
OF WIND DESIGN & ANALYSIS

Trusses: Lumber type So. Pine Grade #1 #2 #3 Size 2 x 4 Spacing 24 in.

Hurricane anchors: Interior: Mfr * Model *
End: Mfr * Model *

Roof sheathing: Type OSB Size 7/16 Fastener type Nails Size 8d/131 GA
Interior zone spacing: Interior 8 in. Periphery 4 in.
Edge and end zone spacing: Interior 8 in. Periphery 4 in.

Top double pl: Type Spruce Grade #1 #2 Size 2 x 4 Nail spacing 12 in.

Studs: Wood or Steel: Wood Type Spruce Grade #1 #2 Size 2 x 4
Interior stud spacing 16 in. Composite (yes or no) Y
End stud spacing 16 in. Composite (yes or no) Y

Shearwall siding: Type OSB Thickness 7/16 in.
76' — Trans: Fastener 8d/131 Spacing: Int 8 in. Edge 4 in.
58' — Long: Fastener 8d/131 Spacing: Int 8 in. Edge 4 in.

Wall tension transferred by: Siding nails 8d/131 @ 4 O.C. edges

Foundation anchor bolts: Concrete strength 3000 psi
Size 1/2 in. Shape L Washer 2" Embedment 6 in.
Location of first anchor bolt from corner 8 in.
Anchor Bolts @ 48" O.C.
Hold-down device: Mfr _____ Model A307 Loc. from corner 8 in.

Type of foundation: 1 #5 rebar continuous required in bond beam./FBC-1804.6.2.6.2

Floor slab 4 in. CMU: Size 8 x 16 in. Height 24 in. Reinf. # 5 at 96 in.
Monolithic footing: Depth 18 in. Bottom width 12 in.

Footing: Width 20 in. Depth 10 in. Reinforcing 2 --# 5 bars
Interior Footings: 16" W X 10" D

Porch Columns: 4X4X8' SYP #2 PT @ 120" OC

Porch Column Fasteners: Simpson ABU44/CC44 or equal

45 SRP

NOTE:
1. Balloon frame ALL gable ends unless this summary is accompanied by Gable End Wall Brace detail.
2. All trusses must bear on exterior walls & porch beams.
3. All walls to be nailed with same nailing pattern as shearwalls.
4. This is a windload only, NOT a structural analysis.
5. This windload is not valid without a raised, embossed seal.
6. It is assumed that ideal soil conditions and pad preparations are provided.
7. Fiber mesh or WWM may be used in concrete slab.
8. Trusses must be anchored and supported in accordance to the truss engineering.
9. Wind design and analysis valid for one use only, no copies permitted.

AMW013985
2/4/05

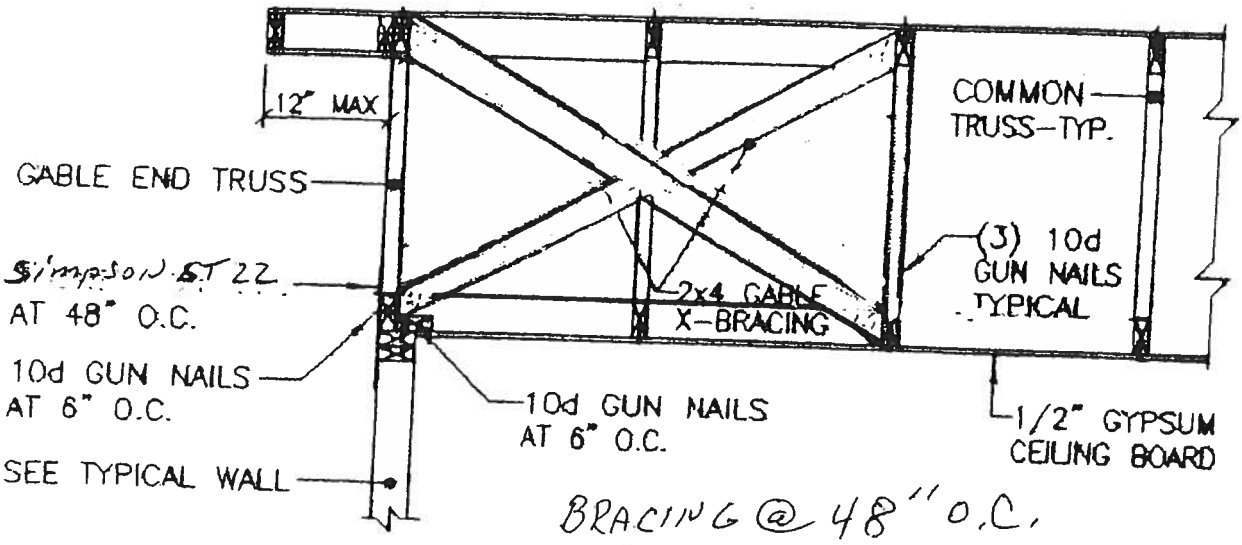

GABLE END DETAIL

SCALE: NTS

45 SRP

AN00013985
9/4/05

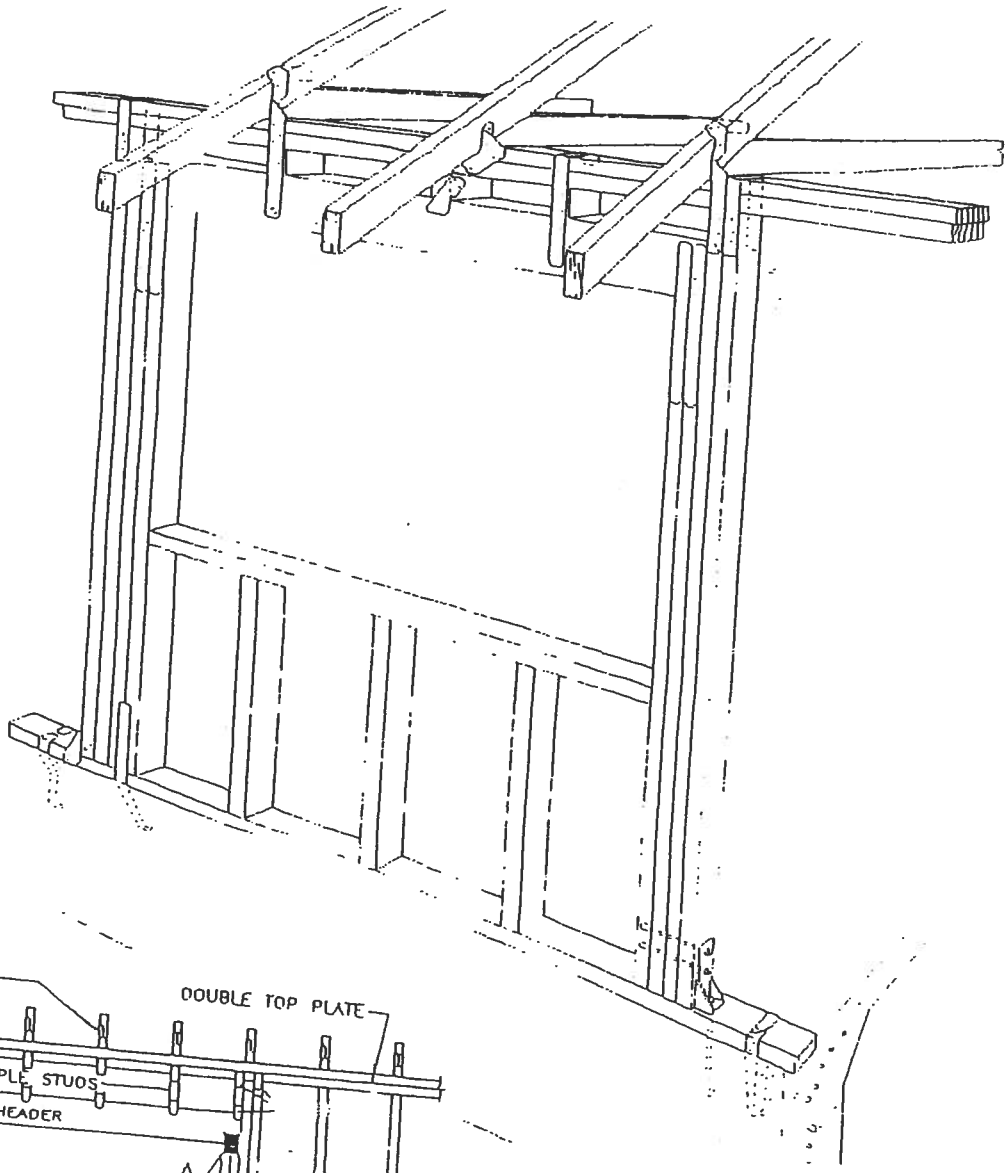

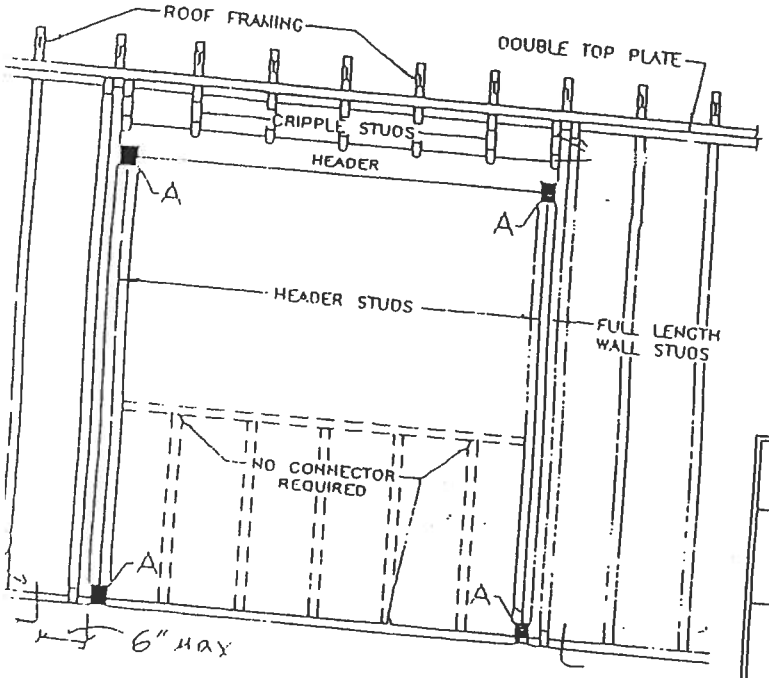

Unsupported Wall Height	Stud Spacing	Maximum Header Span (ft)					
		3'	6'	9'	12'	15'	18'
		Number of Header Studs Supporting End of Header					
		1[1]	2	2	2	2	2
		Number of Full-Length Studs at Each End of Header					
10' or less	12 in.	2	2	3	3	3	3
	16 in.	2	2	3	3	3	3
	24 in.	1	2	2	2	2	2
greater than 10'	12 in.	2	2	3	4	5	5
	16 in.	2	2	3	3	4	4
	24 in.	1	2	2	2	3	3

Total each truss uplift on the header divide by 2 for header anchorage

ASCE 7-98

9/2/05

Wind Load Design per ASCE 7-98

User Input Data		
Structure Type	Building	
Basic Wind Speed (V)	110	mph
Structural Category	II	
Exposure	B	
Struc Nat Frequency (n1)	1	Hz
Slope of Roof (Theta)	30.3	Deg
Type of Roof	Gabled	
Eave Height (Eht)	8.00	ft
Ridge Height (RHt)	21.73	ft
Mean Roof Height (Ht)	14.88	ft
Width Perp. to Wind (B)	52.17	ft
Width Parallel to Wind (L)	52.00	ft
Damping Ratio (beta)	0.01	

Red values should be changed only through "Main Menu"

Calculated Parameters		
Type of Structure		
Height/Least Horizontal Dim	0.29	
Flexible Structure	No	

Calculated Parameters		
Importance Factor	1	
Hurricane Prone Region (V>100 mph)		
Table C6-4 Values		
Alpha =	7.000	
zg =	1200.000	
At =	0.143	
Bt =	0.840	
Am =	0.250	
Bm =	0.450	
Cc =	0.300	
l =	320.00	ft
Epsilon =	0.333	
Zmin =	30.00	ft

Gust Factor Category I: Rigid Structures - Simplified Method			
Gust1	For rigid structures (Nat Freq > 1 Hz) use 0.85	0.85	
Gust Factor Category II: Rigid Structures - Complete Analysis			
Zm	Zmin	30.00	ft
Izm	Cc * (33/z)^0.167	0.3048	
Lzm	l*(zm/33)^Epsilon	309.99	ft
Q	(1/(1+0.63*((B+Ht)/Lzm)^0.63))^0.5	0.8980	
Gust2	0.925*((1+1.7*Izm*3.4*Q)/(1+1.7*3.4*Izm))	0.8648	
Gust Factor Category III: Flexible or Dynamically Sensitive Structures			
Vhref	V*(5280/3600)	161.33	ft/s
Vzm	bm*(zm/33)^Am*Vhref	70.89	ft/s
NF1	NatFreq*Lzm/Vzm	4.37	Hz
Rn	(7.47*NF1)/(1+10.302*NF1)^1.667	0.0552	
Nh	4.6*NatFreq*Ht/Vzm	0.97	
Nb	4.6*NatFreq*B/Vzm	3.39	
Nd	15.4*NatFreq*Depth/Vzm	11.30	
Rh	1/Nh-(1/(2*Nh^2)*(1-Exp(-2*Nh)))	0.5771	
Rb	1/Nb-(1/(2*Nb^2)*(1-Exp(-2*Nb)))	0.2518	
Rd	1/Nd-(1/(2*Nd^2)*(1-Exp(-2*Nd)))	0.0846	
RR	((1/Beta)*Rn*Rh*Rb*(0.53+0.47*Rd))^0.5	0.6759	
gg	+(2*LN(3600*n1))^0.5+0.577/(2*LN(3600*n1))^0.5	4.19	
Gust3	0.925*((1+1.7*Izm*(3.4^2*Q^2+GG^2*RR^2)^0.5)/(1+1.7*3.4*Izm))	1.06	

Gust Factor Summary			
Main Wind-force resisting system:		**Components and Cladding:**	
Gust Factor Category:	I	Gust Factor Category:	I
Gust Factor (G)	0.86	Gust Factor (G)	0.86

ASCE 7-98

Wind Load Design per ASCE 7-98

6.5.12.2.1 Design Wind Pressure - Buildings of All Heights (Non-flexible)

Elev.	Kz	Kzt	Kd	qz	Pressure (lb/ft^2)	
					Windward Wall*	
ft			1.00	lb/ft^2	+GCpi	-GCpi
21.73	0.70	1.00	1.00	21.70	11.81	18.22
20	0.70	1.00	1.00	21.70	11.81	18.22
15	0.70	1.00	1.00	21.70	11.81	18.22

Figure 6-3 - External Pressure Coefficients, Cp

Loads on Main Wind-Force Resisting Systems

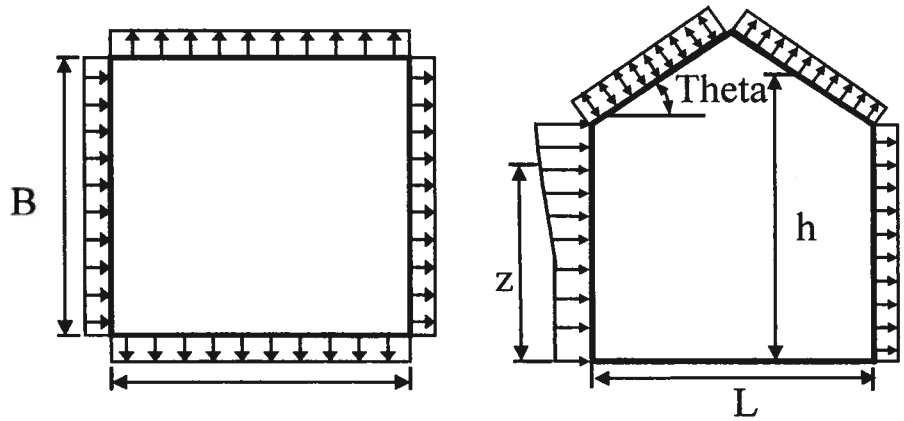

Variable	Formula	Value	Units
Kh	2.01*(15/zg)^(2/Alpha)	0.57	
Kht	Topographic factor (Fig 6-2)	1.00	
Qh	.00256*(V)^2*ImpFac*Kh*Kht*Kd	17.80	psf

Wall Pressure Coefficients, Cp	
Surface	Cp
Windward Wall (See Figure 6.5.12.2.1 for Pressures)	0.80

Roof Pressure Coefficients, Cp	
Roof Area (sq. ft.)	-
Reduction Factor	1.00

Description	Cp	Pressure (psf)	
		+GCpi	-GCpi
Leeward Walls (Wind Dir Parallel to 52.17 ft wall)	-0.50	-10.90	-4.49
Leeward Walls (Wind Dir Parallel to 52 ft wall)	-0.50	-10.89	-4.48
Side Walls	-0.70	-13.98	-7.57
Roof - Normal to Ridge (Theta>=10)			
Windward - Max Negative	-0.19	-6.13	0.28
Windward - Max Positive	0.29	1.28	7.69
Leeward Normal to Ridge	-0.60	-12.44	-6.03
Overhang Top	-0.19	-2.92	-2.92
Overhang Bottom	0.80	0.69	0.69
Roof - Parallel to Ridge (All Theta)			
Dist from Windward Edge: 0 ft to 7.44 ft	-0.90	-17.06	-10.65
Dist from Windward Edge: 7.44 ft to 14.88 ft	-0.90	-17.06	-10.65

ASCE 7-98

Wind Load Design per ASCE 7-98

Dist from Windward Edge: 14.88 ft to 29.76 ft	-0.50	-10.90	-4.49
Dist from Windward Edge: > 29.76 ft	-0.30	-7.82	-1.41

* Horizontal distance from windward edge

Figure 6-4 - External Pressure Coefficients, GCpf

Loads on Main Wind-Force Resisting Systems w/ Ht <= 60 ft

Kh =	2.01*(15/zg)^(2/Alpha)	=	0.57
Kht =	Topographic factor (Fig 6-2)	=	1.00
Qh =	0.00256*(V)^2*ImpFac*Kh*Kht*Kd	=	17.80

Case A						
Surface	GCpf	+GCpi	-GCpi	qh (psf)	Min P (psf)	Max P (psf)
1	0.56	0.18	-0.18	21.70	8.25	16.06
2	0.21	0.18	-0.18	21.70	0.65	8.46
3	-0.43	0.18	-0.18	21.70	-13.24	-5.43
4	-0.37	0.18	-0.18	21.70	-11.94	-4.12
5	0.00	0.18	-0.18	21.70	-3.91	3.91
6	0.00	0.18	-0.18	21.70	-3.91	3.91
1E	0.69	0.18	-0.18	21.70	11.07	18.88
2E	0.27	0.18	-0.18	21.70	1.95	9.77
3E	-0.53	0.18	-0.18	21.70	-15.41	-7.60
4E	-0.48	0.18	-0.18	21.70	-14.32	-6.51
5E	0.00	0.18	-0.18	21.70	-3.91	3.91
6E	0.00	0.18	-0.18	21.70	-3.91	3.91

* p = qh * (GCpf - GCpi)

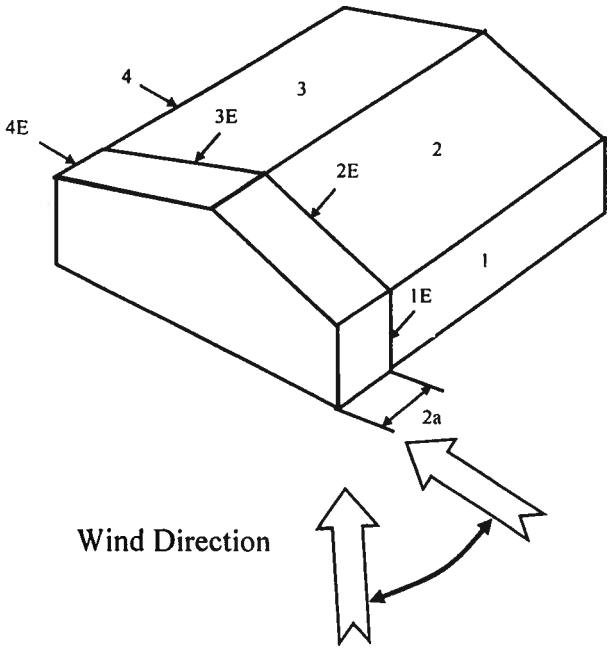

ASCE 7-98

Wind Load Design per ASCE 7-98

Figure 6-4 - External Pressure Coefficients, GCpf

Loads on Main Wind-Force Resisting Systems w/ Ht <= 60 ft

Kh =	2.01*(15/zg)^(2/Alpha)	=	0.57
Kht =	Topographic factor (Fig 6-2)	=	1.00
Qh =	0.00256*(V)^2*ImpFac*Kh*Kht*Kd	=	17.80

Case B						
Surface	GCpf	+GCpi	-GCpi	qh (psf)	Min P (psf)	Max P (psf)
1	-0.45	0.18	-0.18	21.70	-13.67	-5.86
2	-0.69	0.18	-0.18	21.70	-18.88	-11.07
3	-0.37	0.18	-0.18	21.70	-11.94	-4.12
4	-0.45	0.18	-0.18	21.70	-13.67	-5.86
5	0.40	0.18	-0.18	21.70	4.77	12.59
6	-0.29	0.18	-0.18	21.70	-10.20	-2.39
1E	-0.48	0.18	-0.18	21.70	-14.32	-6.51
2E	-1.07	0.18	-0.18	21.70	-27.13	-19.31
3E	-0.53	0.18	-0.18	21.70	-15.41	-7.60
4E	-0.48	0.18	-0.18	21.70	-14.32	-6.51
5E	0.61	0.18	-0.18	21.70	9.33	17.14
6E	-0.43	0.18	-0.18	21.70	-13.24	-5.43

* p = qh * (GCpf - GCpi)

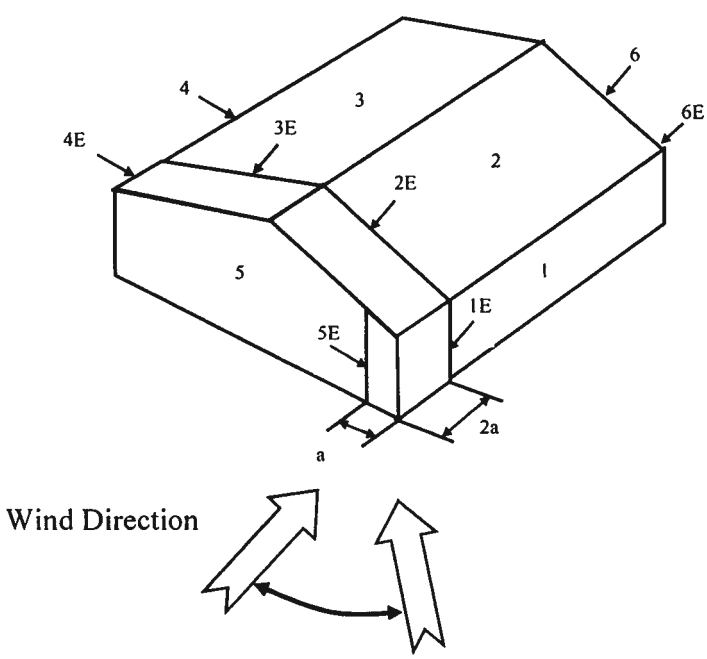

Figure 6-5 - External Pressure Coefficients, GCp

ASCE 7-98

9/2/05

Wind Load Design per ASCE 7-98

Loads on Components and Cladding for Buildings w/ Ht <= 60 ft

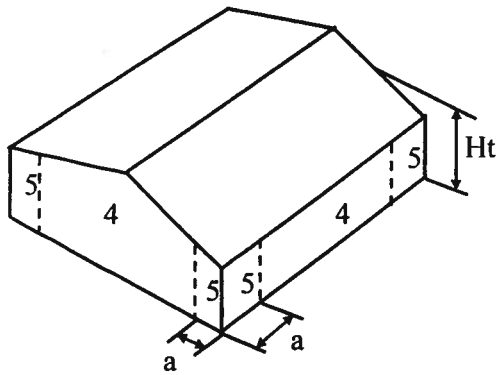

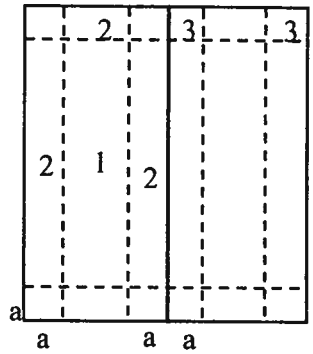

Gabled Roof

10 < Theta <= 45

a = 5.2 ==> 5.20 ft

Component	Width (ft)	Length (ft)	Area (ft^2)	Zone	GCp Max	GCp Min	Wind Press (lb/ft^2) Max	Wind Press (lb/ft^2) Min
	16	7	112.00	5	0.81	-1.03	17.71	-21.53
	0	0	0.00					
	0	0	0.00					
	0	0	0.00					
	0	0	0.00					
	0	0	0.00					
	0	0	0.00					
	0	0	0.00					
	0	0	0.00					
	0	0	0.00					
	0	0	0.00					
	0	0	0.00					
	0	0	0.00					
	0	0	0.00					
	0	0	0.00					
	0	0	0.00					
	0	0	0.00					
	0	0	0.00					
	0	0	0.00					
	0	0	0.00					
	0	0	0.00					
	0	0	0.00					
	0	0	0.00					
	0	0	0.00					

Note: * Enter Zone 1 through 5, or 1H through 3H for overhangs.

Table 6-7 Internal Pressure Coefficients for Buildings, Gcpi

Condition	Gcpi

ASCE 7-98

Wind Load Design per ASCE 7-98

	Max +	Max -
Open Buildings	0.00	0.00
Partially Enclosed Buildings	0.55	-0.55
Enclosed Buildings	0.18	-0.18
Enclosed Buildings	**0.18**	**-0.18**

Table 6-8 External Pressure Coefficients for Arched Roofs, Cp

r (Rise-to-Span Ratio) = 0.3

Condition	Variable	Cp		
		Windward Quarter	Center Half	Leeward Quarter
Roof on Elevated Structure	Cp	0.13	-1	-0.5
	P (+GCpi) - psf	-1.28	-18.60	-10.90
	P (-GCpi) -psf	5.13	-12.19	-4.49
Roof Springing from Ground	Cp	0.42	-1	-0.5
	P (+GCpi) - psf	3.26	-18.60	-10.90
	P (-GCpi) -psf	3.26	-18.60	-10.90

Table 6-9 Force Coefficients for Monoslope Roofs over Open Buildings, Cf

Variable	Description	Value	
L	Roof dimension normal to wind direction	52.00	ft
B	Roof dimension parallel to wind direction	52.17	ft
L/B	Ratio of L to B	0.997	
Theta	Slope of Roof	30.3	Deg
Cf	Force Coefficient	0.00	
X	Distance to center of pressure from windward edge	0.00	ft

Alpine Engineered Products, Inc.

1950 Marley Drive Haines City, FL 33844
Florida Engineering Certificate of Authorization Number: 567
Florida Certificate of Product Approval # FL1999
 Document ID:1SSZ7511Z0214152048

Truss Fabricator: Southern Truss
Job Identification: GC11-
Truss Count: 13
Model Code: Florida Building Code 2004
Truss Criteria: ANSI/TPI-2002(STD)/FBC
Engineering Software: Alpine Software,Version 7.22.
Structural Engineer of Record:
Address:
Minimum Design Loads: Roof - 37.0 PSF @ 1.25 Duration
Floor - N/A
Wind - 120 MPH ASCE 7-02 -Closed

Seal Date: 12/14/2005

-Truss Design Engineer-
James F. Collins Jr.
Florida License Number: 52212
1950 Marley Drive
Haines City, FL 33844

Notes:

1. Determination as to the suitability of these truss components for the structure is the responsibility of the building designer/engineer of record, as defined in ANSI/TPI 1
2. The drawing date shown on this index sheet must match the date shown on the individual truss component drawing.
3. As shown on attached drawings; the drawing number is preceded by: HCUSR7511

Details: BRCLBSUB

#	Ref Description	Drawing#	Date
1	91430--A1	05348078	12/14/05
2	91431--A2	05348080	12/14/05
3	91432--A3	05348079	12/14/05
4	91433--A4	05348081	12/14/05
5	91434--A5	05348076	12/14/05
6	91435--B1	05348082	12/14/05
7	91436--B2	05348077	12/14/05
8	91437--B3	05348075	12/14/05
9	91438--HJ7	05348083	12/14/05
10	91439--EJ7	05348084	12/14/05
11	91440--CJ5	05348085	12/14/05
12	91441--CJ3	05348086	12/14/05
13	91442--CJ1	05348087	12/14/05

Alpine Engineered Products, Inc.

1950 Marley Drive Haines City, FL 33844
Florida Engineering Certificate of Authorization Number: 567
 Document ID:1SSZ7511Z0214152048

Truss Fabricator: Southern Truss
Job Identification: GC11- (GC11|-)
Truss Count: 1
Model Code: Florida Building Code 2004
Truss Criteria: ANSI/TPI-2002(STD)/FBC
Engineering Software: Alpine Software,Version 7.22.
Structural Engineer of Record:
Address:
Minimum Design Loads: Roof - 37.0 PSF @ 1.25 Duration
Floor - N/A
Wind - 120 MPH ASCE 7-02 -Closed

Seal Date: 12/14/2005

-Truss Design Engineer-
James F. Collins Jr.
Florida License Number: 52212
1950 Marley Drive
Haines City, FL 33844

Notes:

1. Determination as to the suitability of these truss components for the structure is the responsibility of the building designer/engineer of record, as defined in ANSI/TPI 1
2. The drawing date shown on this index sheet must match the date shown on the individual truss component drawing.
3. As shown on attached drawings; the drawing number is preceded by: HCUSR7511

Revised Trusses

#	Ref	Description	Drawing#	Date
1	91433--A4		05348081	12/14/05

ALPINE

THIS DWG PREPARED FROM COMPUTER INPUT (LOADS & DIMENSIONS) SUBMITTED BY TRUSS MFR.

Top chord 2x4 SP #2 Dense
Bot chord 2x4 SP #2 Dense
Webs 2x4 SP #3

Calculated horizontal deflection is 0.25" due to live load and 0.21" due to dead load.

120 mph wind, 15.00 ft mean hgt, ASCE 7-02, CLOSED bldg, not located within 4.50 ft from roof edge, CAT II, EXP B, wind TC DL=4.2 psf, wind BC DL=5.0 psf.

Deflection meets L/240 live and L/180 total load.

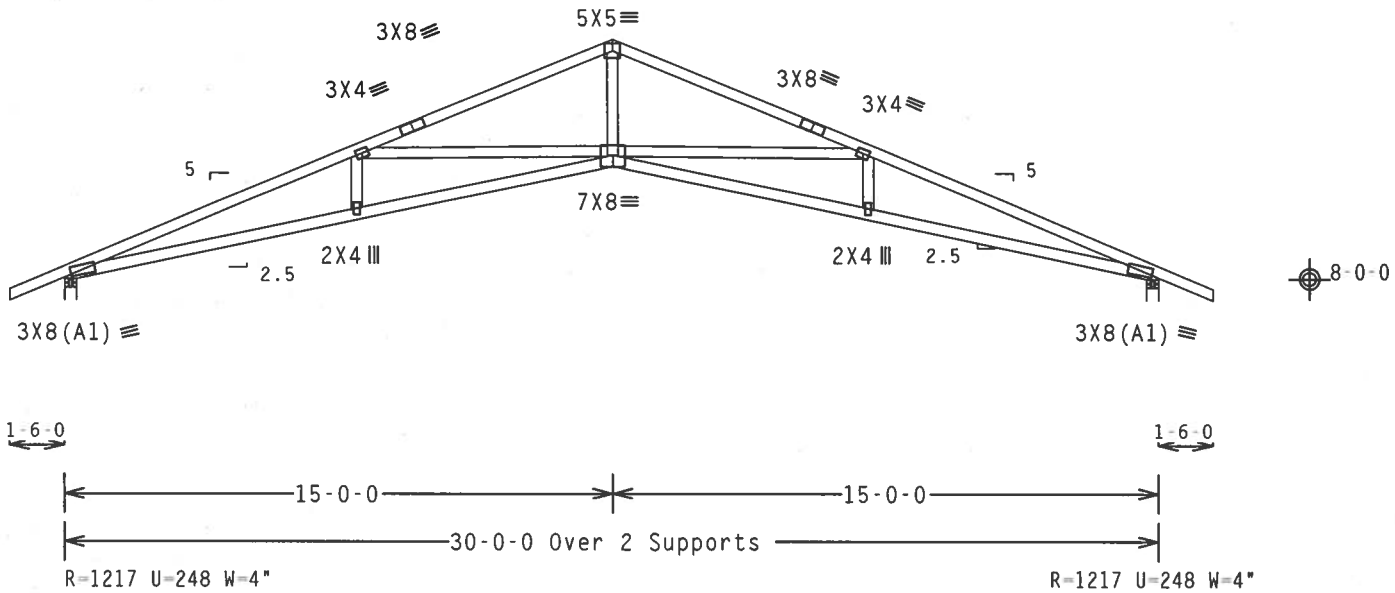

Design Crit: TPI-2002(STD)/FBC

PLT TYP. Wave\R Cq/RT=1.00(1.25)/10(0) 7.22.1122 QTY:5 FL/-/5/-/E/-/- Scale =.1875"/Ft.

ALPINE
Alpine Engineered Products, Inc.
1950 Marley Drive
Haines City, FL 33844
FL Certificate of Authorization # 567

WARNING TRUSSES REQUIRE EXTREME CARE IN FABRICATION, HANDLING, SHIPPING, INSTALLING AND BRACING. REFER TO BCSI 1-03 (BUILDING COMPONENT SAFETY INFORMATION), PUBLISHED BY TPI (TRUSS PLATE INSTITUTE, 583 D'ONOFRIO DR., SUITE 200, MADISON, WI 53719) AND WTCA (WOOD TRUSS COUNCIL OF AMERICA, 6300 ENTERPRISE LN, MADISON, WI 53719) FOR SAFETY PRACTICES PRIOR TO PERFORMING THESE FUNCTIONS. UNLESS OTHERWISE INDICATED, TOP CHORD SHALL HAVE PROPERLY ATTACHED STRUCTURAL PANELS AND BOTTOM CHORD SHALL HAVE A PROPERLY ATTACHED RIGID CEILING.

IMPORTANTFURNISH A COPY OF THIS DESIGN TO THE INSTALLATION CONTRACTOR. ALPINE ENGINEERED PRODUCTS, INC. SHALL NOT BE RESPONSIBLE FOR ANY DEVIATION FROM THIS DESIGN; ANY FAILURE TO BUILD THE TRUSS IN CONFORMANCE WITH TPI; OR FABRICATING, HANDLING, SHIPPING, INSTALLING & BRACING OF TRUSSES. DESIGN CONFORMS WITH APPLICABLE PROVISIONS OF NDS (NATIONAL DESIGN SPEC. BY AF&PA) AND TPI. ALPINE CONNECTOR PLATES ARE MADE OF 20/18/16GA (W,H/S/K) ASTM A653 GRADE 40/60 (W, K/H,S) GALV. STEEL. APPLY PLATES TO EACH FACE OF TRUSS AND, UNLESS OTHERWISE LOCATED ON THIS DESIGN, POSITION PER DRAWINGS 160A-Z. ANY INSPECTION OF PLATES FOLLOWED BY (1) SHALL BE PER ANNEX A3 OF TPI1-2002 SEC.3. A SEAL ON THIS DRAWING INDICATES ACCEPTANCE OF PROFESSIONAL ENGINEERING RESPONSIBILITY SOLELY FOR THE TRUSS COMPONENT DESIGN SHOWN. THE SUITABILITY AND USE OF THIS COMPONENT FOR ANY BUILDING IS THE RESPONSIBILITY OF THE BUILDING DESIGNER PER ANSI/TPI 1 SEC. 2.

JAMES F. COLLINS, JR. LICENSE No. 52212 STATE OF FLORIDA PROFESSIONAL ENGINEER
Dec 14 '05

TC LL	20.0 PSF	REF R7511- 91430
TC DL	7.0 PSF	DATE 12/14/05
BC DL	10.0 PSF	DRW HCUSR7511 05348078
BC LL	0.0 PSF	HC-ENG EC/WHK
TOT.LD.	37.0 PSF	SEQN- 20990
DUR.FAC.	1.25	
SPACING	24.0"	JREF- 1SSZ7511Z02

(GC11- - A2)

Top chord 2x4 SP #2 Dense
Bot chord 2x4 SP #2 Dense
Webs 2x4 SP #3

Calculated horizontal deflection is 0.25" due to live load and 0.21" due to dead load.

120 mph wind, 15.00 ft mean hgt, ASCE 7-02, CLOSED bldg, not located within 4.50 ft from roof edge, CAT II, EXP B, wind TC DL=4.2 psf, wind BC DL=5.0 psf.

Deflection meets L/240 live and L/180 total load.

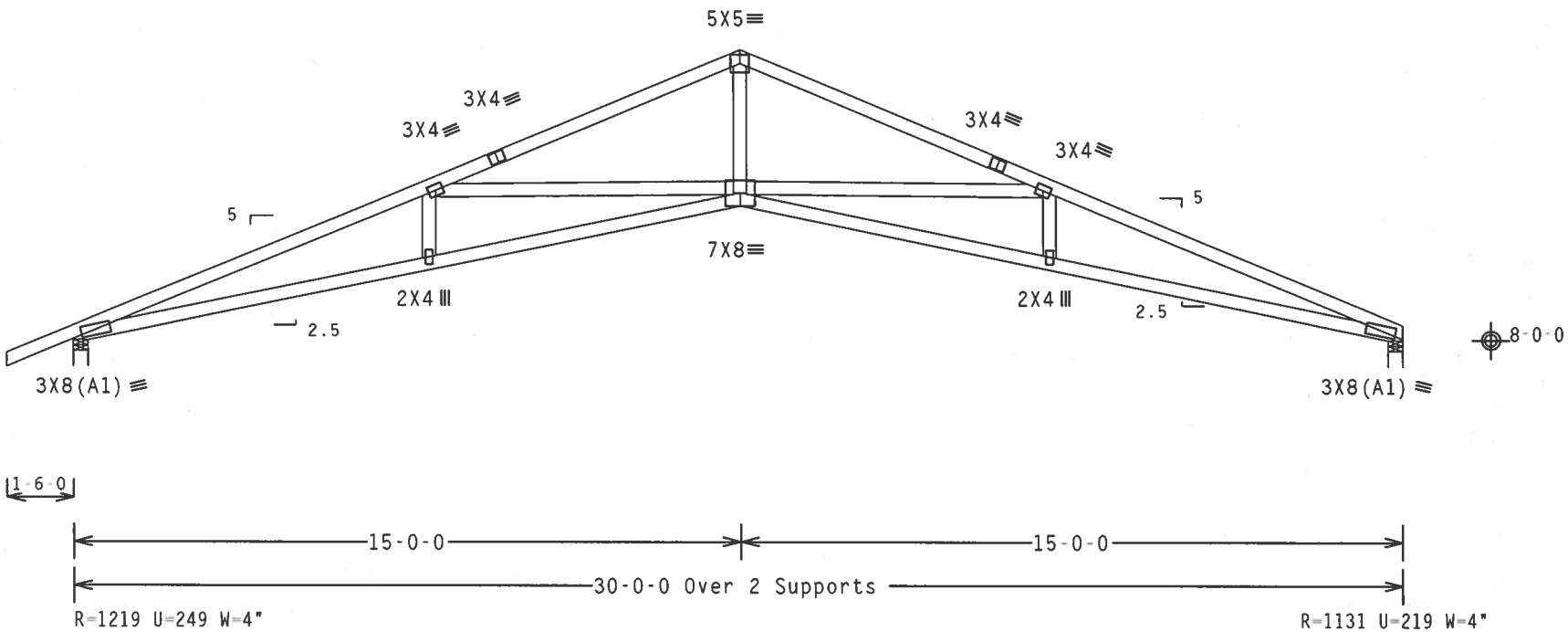

Design Crit: TPI-2002(STD)/FBC

PLT TYP. Wave\R Cq/RT=1.00(1.25)/10(0) 7.22.1122 QTY:2 FL/-/5/-/E/-/- Scale =.25"/Ft.

ALPINE

Alpine Engineered Products, Inc.
1950 Marley Drive
Haines City, FL 33844
FL Certificate of Authorization # 567

WARNING TRUSSES REQUIRE EXTREME CARE IN FABRICATION, HANDLING, SHIPPING, INSTALLING AND BRACING. REFER TO BCSI 1-03 (BUILDING COMPONENT SAFETY INFORMATION), PUBLISHED BY TPI (TRUSS PLATE INSTITUTE, 583 D'ONOFRIO DR., SUITE 200, MADISON, WI 53719) AND WTCA (WOOD TRUSS COUNCIL OF AMERICA, 6300 ENTERPRISE LN, MADISON, WI 53719) FOR SAFETY PRACTICES PRIOR TO PERFORMING THESE FUNCTIONS. UNLESS OTHERWISE INDICATED, TOP CHORD SHALL HAVE PROPERLY ATTACHED STRUCTURAL PANELS AND BOTTOM CHORD SHALL HAVE A PROPERLY ATTACHED RIGID CEILING.

IMPORTANTFURNISH A COPY OF THIS DESIGN TO THE INSTALLATION CONTRACTOR. ALPINE ENGINEERED PRODUCTS, INC. SHALL NOT BE RESPONSIBLE FOR ANY DEVIATION FROM THIS DESIGN; ANY FAILURE TO BUILD THE TRUSS IN CONFORMANCE WITH TPI; OR FABRICATING, HANDLING, SHIPPING, INSTALLING & BRACING OF TRUSSES. DESIGN CONFORMS WITH APPLICABLE PROVISIONS OF NDS (NATIONAL DESIGN SPEC. BY AF&PA) AND TPI. ALPINE CONNECTOR PLATES ARE MADE OF 20/18/16GA (W,H/S/K) ASTM A653 GRADE 40/60 (W, K/H,S) GALV. STEEL. APPLY PLATES TO EACH FACE OF TRUSS AND, UNLESS OTHERWISE LOCATED ON THIS DESIGN, POSITION PER DRAWINGS 160A-Z. ANY INSPECTION OF PLATES FOLLOWED BY (1) SHALL BE PER ANNEX A3 OF TPI1-2002 SEC.3. A SEAL ON THIS DRAWING INDICATES ACCEPTANCE OF PROFESSIONAL ENGINEERING RESPONSIBILITY SOLELY FOR THE TRUSS COMPONENT DESIGN SHOWN. THE SUITABILITY AND USE OF THIS COMPONENT FOR ANY BUILDING IS THE RESPONSIBILITY OF THE BUILDING DESIGNER PER ANSI/TPI 1 SEC. 2.

JAMES F. COLLINS JR. LICENSE No 52212 STATE OF FLORIDA PROFESSIONAL ENGINEER

Dec 14 '05

TC LL	20.0 PSF	REF	R7511- 91431
TC DL	7.0 PSF	DATE	12/14/05
BC DL	10.0 PSF	DRW	HCUSR7511 05348080
BC LL	0.0 PSF	HC-ENG	EC/WHK
TOT.LD.	37.0 PSF	SEQN-	20995
DUR.FAC.	1.25		
SPACING	24.0"	JREF-	1SSZ7511Z02

(GC11- - A3)

Top chord 2x4 SP #2 Dense
Bot chord 2x4 SP #2 Dense
Webs 2x4 SP #3

Calculated horizontal deflection is 0.19" due to live load and 0.16" due to dead load.

120 mph wind, 15.00 ft mean hgt, ASCE 7-02, CLOSED bldg, not located within 4.50 ft from roof edge, CAT II, EXP B, wind TC DL=4.2 psf, wind BC DL=5.0 psf.

Deflection meets L/240 live and L/180 total load.

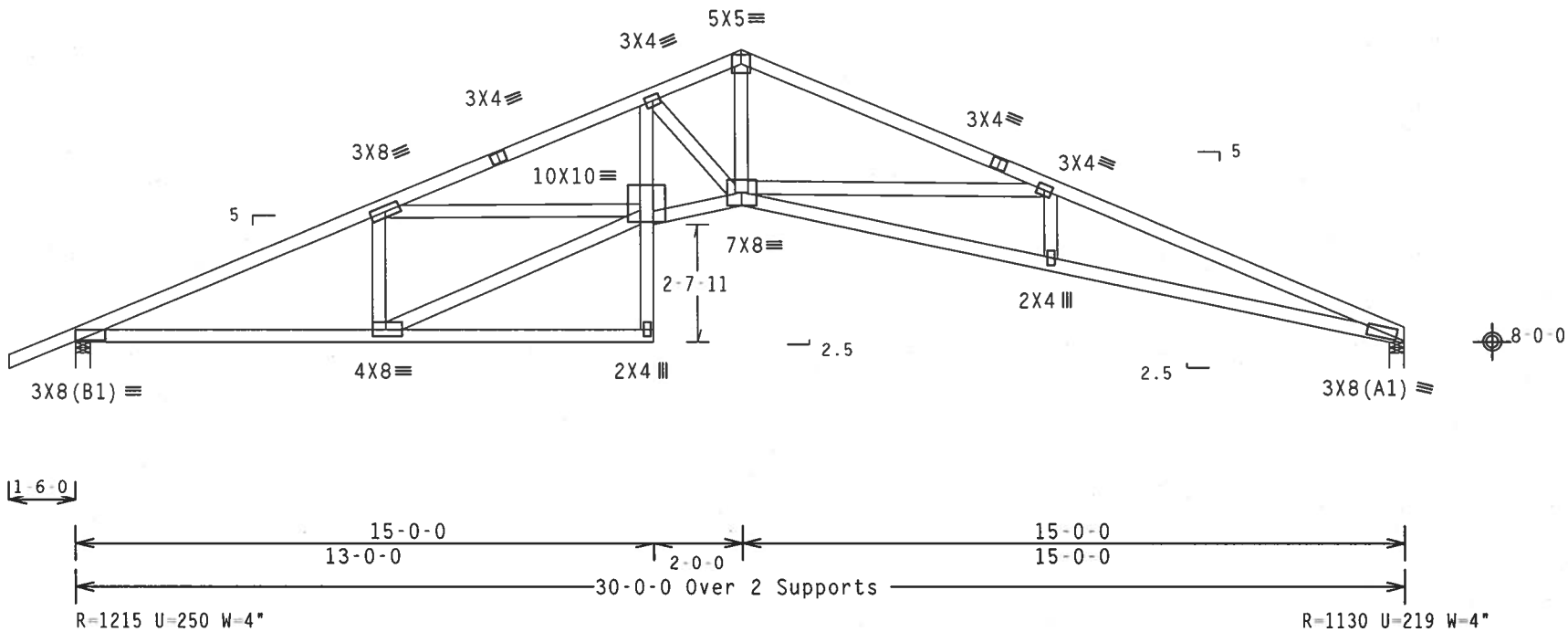

Design Crit: TPI-2002(STD)/FBC

PLT TYP. Wave\R Cq/RT=1.00(1.25)/10(0) 7.22.1122.01 QTY:1 FL/-/5/-/E/-/- Scale =.25"/Ft.

ALPINE

Alpine Engineered Products, Inc.
1950 Marley Drive
Haines City, FL 33844
FL Certificate of Authorization # 567

WARNING TRUSSES REQUIRE EXTREME CARE IN FABRICATION, HANDLING, SHIPPING, INSTALLING AND BRACING. REFER TO BCSI 1-03 (BUILDING COMPONENT SAFETY INFORMATION), PUBLISHED BY TPI (TRUSS PLATE INSTITUTE, 583 D'ONOFRIO DR., SUITE 200, MADISON, WI 53719) AND WTCA (WOOD TRUSS COUNCIL OF AMERICA, 6300 ENTERPRISE LN, MADISON, WI 53719) FOR SAFETY PRACTICES PRIOR TO PERFORMING THESE FUNCTIONS. UNLESS OTHERWISE INDICATED, TOP CHORD SHALL HAVE PROPERLY ATTACHED STRUCTURAL PANELS AND BOTTOM CHORD SHALL HAVE A PROPERLY ATTACHED RIGID CEILING.

IMPORTANTFURNISH A COPY OF THIS DESIGN TO THE INSTALLATION CONTRACTOR. ALPINE ENGINEERED PRODUCTS, INC. SHALL NOT BE RESPONSIBLE FOR ANY DEVIATION FROM THIS DESIGN; ANY FAILURE TO BUILD THE TRUSS IN CONFORMANCE WITH TPI; OR FABRICATING, HANDLING, SHIPPING, INSTALLING & BRACING OF TRUSSES. DESIGN CONFORMS WITH APPLICABLE PROVISIONS OF NDS (NATIONAL DESIGN SPEC. BY AF&PA) AND TPI. ALPINE CONNECTOR PLATES ARE MADE OF 20/18/16GA (W,H/S/K) ASTM A653 GRADE 40/60 (W, K/H,S) GALV. STEEL. APPLY PLATES TO EACH FACE OF TRUSS AND, UNLESS OTHERWISE LOCATED ON THIS DESIGN, POSITION PER DRAWINGS 160A-Z. ANY INSPECTION OF PLATES FOLLOWED BY (I) SHALL BE PER ANNEX A3 OF TPI1-2002 SEC.3. A SEAL ON THIS DRAWING INDICATES ACCEPTANCE OF PROFESSIONAL ENGINEERING RESPONSIBILITY SOLELY FOR THE TRUSS COMPONENT DESIGN SHOWN. THE SUITABILITY AND USE OF THIS COMPONENT FOR ANY BUILDING IS THE RESPONSIBILITY OF THE BUILDING DESIGNER PER ANSI/TPI 1 SEC. 2.

JAMES F. COLLINS, JR. LICENSE No. 52212 STATE OF FLORIDA PROFESSIONAL ENGINEER

Dec 14, 2005

TC LL	20.0 PSF	REF	R7511- 91432
TC DL	7.0 PSF	DATE	12/14/05
BC DL	10.0 PSF	DRW	HCUSR7511 05348079
BC LL	0.0 PSF	HC-ENG	EC/WHK
TOT.LD.	37.0 PSF	SEQN-	20999
DUR.FAC.	1.25		
SPACING	24.0"	JREF-	1SSZ7511Z02

(GC11- - A4)

Top chord 2x4 SP #2 Dense
Bot chord 2x4 SP #2 Dense
Webs 2x4 SP #3

Calculated horizontal deflection is 0.19" due to live load and 0.17" due to dead load.

120 mph wind, 15.00 ft mean hgt, ASCE 7-02, CLOSED bldg, Located anywhere in roof, CAT II, EXP B, wind TC DL=4.2 psf, wind BC DL=5.0 psf.

Deflection meets L/240 live and L/180 total load.

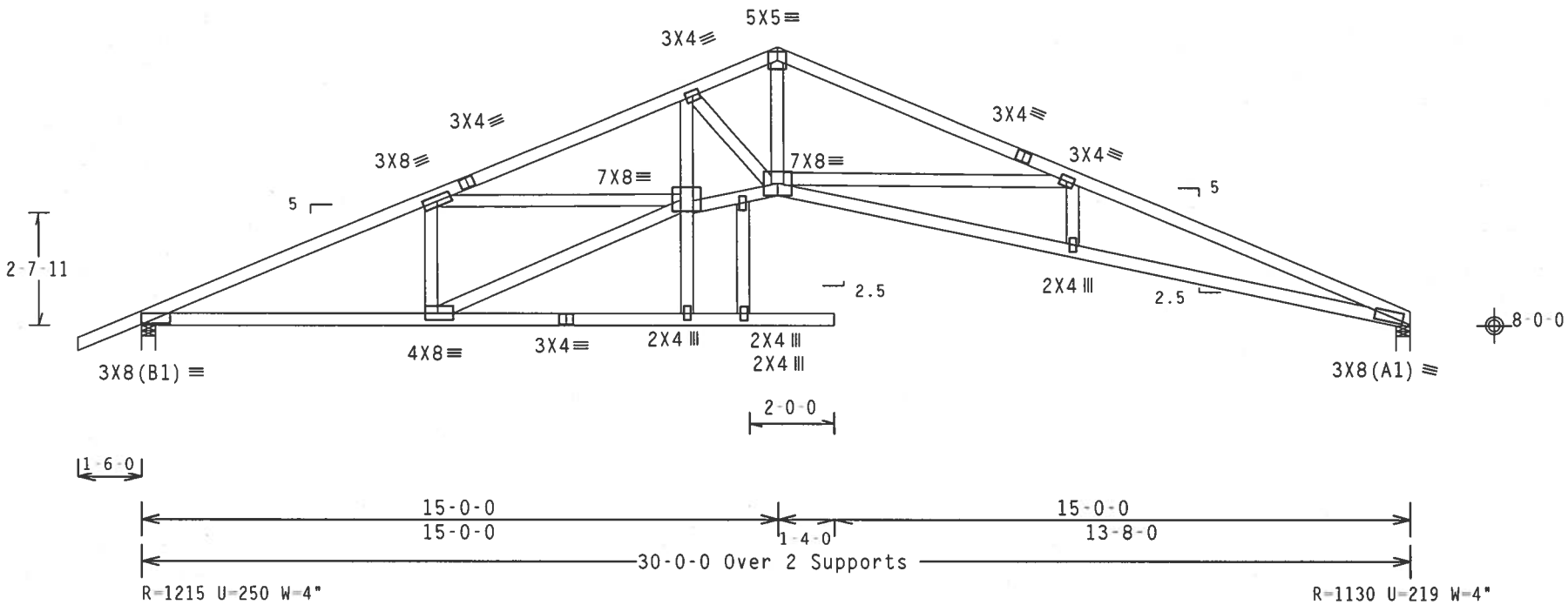

Design Crit: TPI-2002(STD)/FBC

PLT TYP. Wave\R Cq/RT=1.00(1.25)/10(0) 7.22.1122.0 QTY:14 FL/-/5/-/E/-/- Scale =.25"/Ft.

ALPINE
Alpine Engineered Products, Inc.
1950 Marley Drive
Haines City, FL 33844
FL Certificate of Authorization # 567

WARNING TRUSSES REQUIRE EXTREME CARE IN FABRICATION, HANDLING, SHIPPING, INSTALLING AND BRACING. REFER TO BCSI 1-03 (BUILDING COMPONENT SAFETY INFORMATION), PUBLISHED BY TPI (TRUSS PLATE INSTITUTE, 583 D'ONOFRIO DR., SUITE 200, MADISON, WI 53719) AND WTCA (WOOD TRUSS COUNCIL OF AMERICA, 6300 ENTERPRISE LN. MADISON, WI 53719) FOR SAFETY PRACTICES PRIOR TO PERFORMING THESE FUNCTIONS. UNLESS OTHERWISE INDICATED, TOP CHORD SHALL HAVE PROPERLY ATTACHED STRUCTURAL PANELS AND BOTTOM CHORD SHALL HAVE A PROPERLY ATTACHED RIGID CEILING.

IMPORTANTFURNISH A COPY OF THIS DESIGN TO THE INSTALLATION CONTRACTOR. ALPINE ENGINEERED PRODUCTS, INC. SHALL NOT BE RESPONSIBLE FOR ANY DEVIATION FROM THIS DESIGN; ANY FAILURE TO BUILD THE TRUSS IN CONFORMANCE WITH TPI: OR FABRICATING, HANDLING, SHIPPING, INSTALLING & BRACING OF TRUSSES. DESIGN CONFORMS WITH APPLICABLE PROVISIONS OF NDS (NATIONAL DESIGN SPEC. BY AF&PA) AND TPI. ALPINE CONNECTOR PLATES ARE MADE OF 20/18/16GA (W.H/S/K) ASTM A653 GRADE 40/60 (W. K/H.S) GALV. STEEL. APPLY PLATES TO EACH FACE OF TRUSS AND, UNLESS OTHERWISE LOCATED ON THIS DESIGN, POSITION PER DRAWINGS 160A-Z. ANY INSPECTION OF PLATES FOLLOWED BY (1) SHALL BE PER ANNEX A3 OF TPI1-2002 SEC.3. A SEAL ON THIS DRAWING INDICATES ACCEPTANCE OF PROFESSIONAL ENGINEERING RESPONSIBILITY SOLELY FOR THE TRUSS COMPONENT DESIGN SHOWN. THE SUITABILITY AND USE OF THIS COMPONENT FOR ANY BUILDING IS THE RESPONSIBILITY OF THE BUILDING DESIGNER PER ANSI/TPI 1 SEC. 2.

JAMES F. COLLINS JR. LICENSE No 52212 STATE OF FLORIDA PROFESSIONAL ENGINEER
Dec 14, 2005

TC LL	20.0 PSF	REF	R7511- 91433
TC DL	7.0 PSF	DATE	12/14/05
BC DL	10.0 PSF	DRW	HCUSR7511 05348081
BC LL	0.0 PSF	HC-ENG	EC/WHK
TOT.LD.	37.0 PSF	SEQN-	21060 REV
DUR.FAC.	1.25		
SPACING	24.0"	JREF-	1SSZ7511Z02

Top chord 2x4 SP #2 Dense
Bot chord 2x4 SP #2 Dense
Webs 2x4 SP #3

Gable end supports 8" max rake overhang.

Deflection meets L/240 live and L/180 total load.

THE BUILDING DESIGNER IS RESPONSIBLE FOR THE DESIGN OF THE ROOF AND CEILING DIAPHRAGMS, GABLE END SHEAR WALLS, AND SUPPORTING SHEAR WALLS. SHEAR WALLS MUST PROVIDE CONTINUOUS LATERAL RESTRAINT TO THE GABLE END. ALL CONNECTIONS TO BE DESIGNED BY THE BUILDING DESIGNER.

SEE DWGS A12015EC0901 FOR ADDITIONAL REQUIREMENTS.

120 mph wind, 15.00 ft mean hgt, ASCE 7-02, CLOSED bldg, Located anywhere in roof, CAT II, EXP B, wind TC DL=4.2 psf, wind BC DL=5.0 psf.

See DWGS A12015EE0405 & GBLLETIN0405 for more requirements.

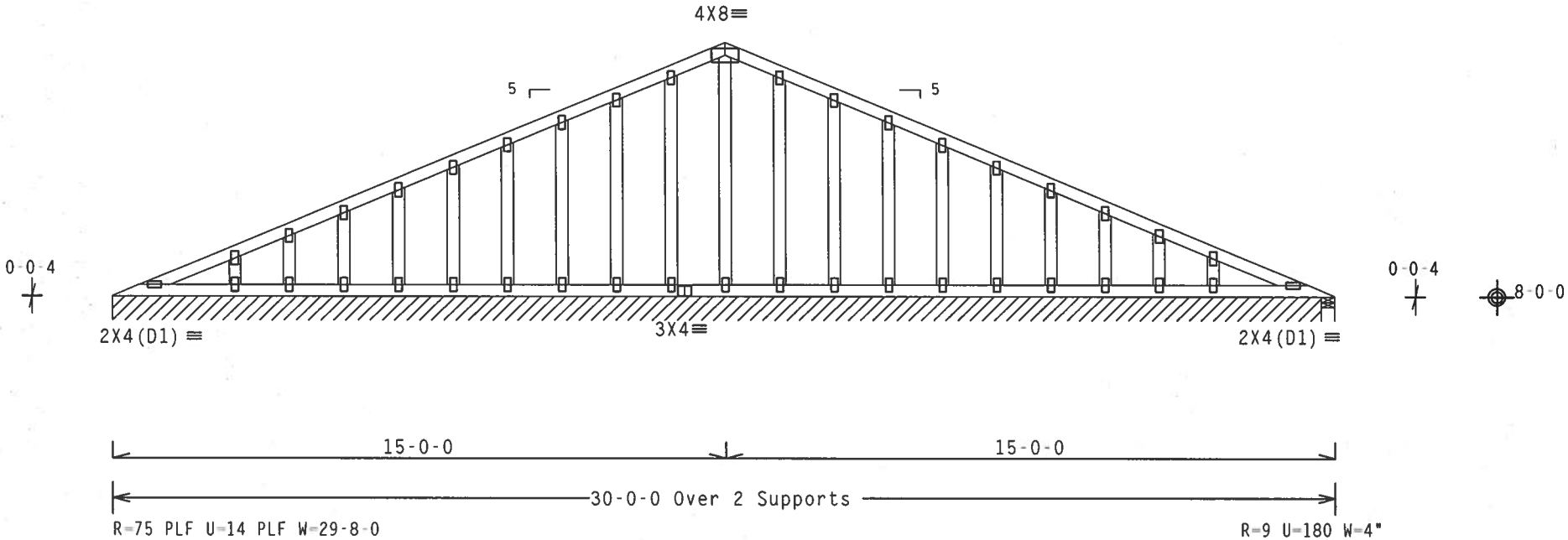

Note: All Plates Are 2X4 Except As Shown.

Design Crit: TPI-2002(STD)/FBC

PLT TYP. Wave\R Cq/RT=1.00(1.25)/10(0) 7.22.1122 Q1 QTY:2 FL/-/5/-/E/-/- Scale =.25"/Ft.

ALPINE
Alpine Engineered Products, Inc.
1950 Marley Drive
Haines City, FL 33844
FL Certificate of Authorization # 567

WARNING TRUSSES REQUIRE EXTREME CARE IN FABRICATION, HANDLING, SHIPPING, INSTALLING AND BRACING. REFER TO BCSI 1-03 (BUILDING COMPONENT SAFETY INFORMATION), PUBLISHED BY TPI (TRUSS PLATE INSTITUTE, 583 D'ONOFRIO DR., SUITE 200, MADISON, WI 53719) AND WTCA (WOOD TRUSS COUNCIL OF AMERICA, 6300 ENTERPRISE LN. MADISON, WI 53719) FOR SAFETY PRACTICES PRIOR TO PERFORMING THESE FUNCTIONS. UNLESS OTHERWISE INDICATED, TOP CHORD SHALL HAVE PROPERLY ATTACHED STRUCTURAL PANELS AND BOTTOM CHORD SHALL HAVE A PROPERLY ATTACHED RIGID CEILING.

IMPORTANTFURNISH A COPY OF THIS DESIGN TO THE INSTALLATION CONTRACTOR. ALPINE ENGINEERED PRODUCTS, INC. SHALL NOT BE RESPONSIBLE FOR ANY DEVIATION FROM THIS DESIGN; ANY FAILURE TO BUILD THE TRUSS IN CONFORMANCE WITH TPI; OR FABRICATING, HANDLING, SHIPPING, INSTALLING & BRACING OF TRUSSES. DESIGN CONFORMS WITH APPLICABLE PROVISIONS OF NDS (NATIONAL DESIGN SPEC. BY AF&PA) AND TPI. ALPINE CONNECTOR PLATES ARE MADE OF 20/18/16GA (W,H/S/K) ASTM A653 GRADE 40/60 (W, K/H,S) GALV. STEEL. APPLY PLATES TO EACH FACE OF TRUSS AND. UNLESS OTHERWISE LOCATED ON THIS DESIGN, POSITION PER DRAWINGS 160A-Z. ANY INSPECTION OF PLATES FOLLOWED BY (1) SHALL BE PER ANNEX A3 OF TPI1-2002 SEC.3. A SEAL ON THIS DRAWING INDICATES ACCEPTANCE OF PROFESSIONAL ENGINEERING RESPONSIBILITY SOLELY FOR THE TRUSS COMPONENT DESIGN SHOWN. THE SUITABILITY AND USE OF THIS COMPONENT FOR ANY BUILDING IS THE RESPONSIBILITY OF THE BUILDING DESIGNER PER ANSI/TPI 1 SEC. 2.

JAMES F. COLLINS JR. LICENSE No. 52212 STATE OF FLORIDA PROFESSIONAL ENGINEER

Dec 14, 2005

TC LL	20.0 PSF	REF R7511- 91434
TC DL	7.0 PSF	DATE 12/14/05
BC DL	10.0 PSF	DRW HCUSR7511 05348076
BC LL	0.0 PSF	HC-ENG EC/WHK
TOT.LD.	37.0 PSF	SEQN- 21065
DUR.FAC.	1.25	
SPACING	24.0"	JREF- 1SSZ7511Z02

(GC11 - - B1)

Top chord 2x4 SP #2 Dense
Bot chord 2x4 SP #2 Dense
Webs 2x4 SP #3

120 mph wind, 15.00 ft mean hgt, ASCE 7-02, CLOSED bldg, Located anywhere in roof, CAT II, EXP B, wind TC DL=4.2 psf, wind BC DL=5.0 psf.

Deflection meets L/240 live and L/180 total load.

In lieu of structural panels use purlins to brace all flat TC @ 24" OC.

#1 hip supports 6-6-8 jacks with no webs.

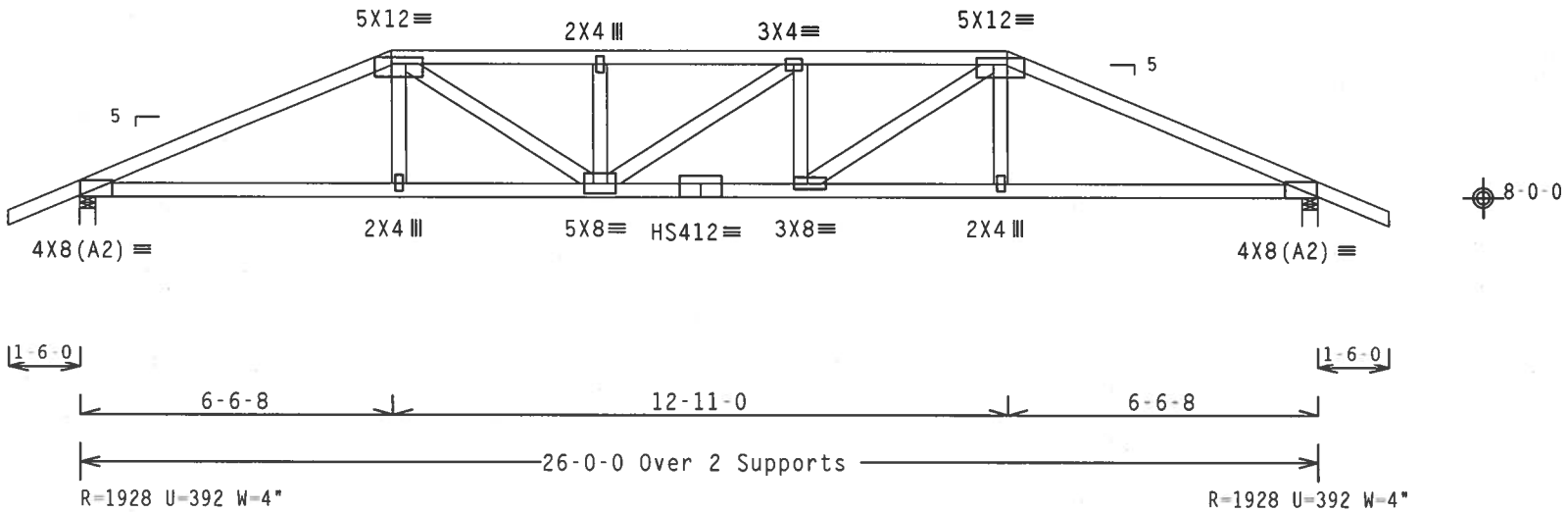

Design Crit: TPI-2002(STD)/FBC

PLT TYP. 20 Gauge HS,Wave\R Cq/RT=1.00(1.25)/10(0) 7.22.1122.01 QTY:1 FL/-/5/-/E/-/- Scale =.25"/Ft.

ALPINE
Alpine Engineered Products, Inc.
1950 Marley Drive
Haines City, FL 33844
FL Certificate of Authorization # 567

WARNING TRUSSES REQUIRE EXTREME CARE IN FABRICATION, HANDLING, SHIPPING, INSTALLING AND BRACING. REFER TO BCSI 1-03 (BUILDING COMPONENT SAFETY INFORMATION), PUBLISHED BY TPI (TRUSS PLATE INSTITUTE, 583 D'ONOFRIO DR., SUITE 200, MADISON, WI 53719) AND WTCA (WOOD TRUSS COUNCIL OF AMERICA, 6300 ENTERPRISE LN, MADISON, WI 53719) FOR SAFETY PRACTICES PRIOR TO PERFORMING THESE FUNCTIONS. UNLESS OTHERWISE INDICATED, TOP CHORD SHALL HAVE PROPERLY ATTACHED STRUCTURAL PANELS AND BOTTOM CHORD SHALL HAVE A PROPERLY ATTACHED RIGID CEILING.

IMPORTANTFURNISH A COPY OF THIS DESIGN TO THE INSTALLATION CONTRACTOR. ALPINE ENGINEERED PRODUCTS, INC. SHALL NOT BE RESPONSIBLE FOR ANY DEVIATION FROM THIS DESIGN; ANY FAILURE TO BUILD THE TRUSS IN CONFORMANCE WITH TPI: OR FABRICATING, HANDLING, SHIPPING, INSTALLING & BRACING OF TRUSSES. DESIGN CONFORMS WITH APPLICABLE PROVISIONS OF NDS (NATIONAL DESIGN SPEC. BY AF&PA) AND TPI. ALPINE CONNECTOR PLATES ARE MADE OF 20/18/16GA (W.H/S/K) ASTM A653 GRADE 40/60 (W. K/H.S) GALV. STEEL. APPLY PLATES TO EACH FACE OF TRUSS AND. UNLESS OTHERWISE LOCATED ON THIS DESIGN, POSITION PER DRAWINGS 160A-2 ANY INSPECTION OF PLATES FOLLOWED BY (1) SHALL BE PER ANNEX A3 OF TPI1-2002 SEC.3. A SEAL ON THIS DRAWING INDICATES ACCEPTANCE OF PROFESSIONAL ENGINEERING RESPONSIBILITY SOLELY FOR THE TRUSS COMPONENT DESIGN SHOWN. THE SUITABILITY AND USE OF THIS COMPONENT FOR ANY BUILDING IS THE RESPONSIBILITY OF THE BUILDING DESIGNER PER ANSI/TPI 1 SEC. 2.

JAMES F. COLLINS LICENSE No.52272 STATE OF FLORIDA PROFESSIONAL ENGINEER

Dec

TC LL	20.0 PSF	REF R7511- 91435
TC DL	7.0 PSF	DATE 12/14/05
BC DL	10.0 PSF	DRW HCUSR7511 05348082
BC LL	0.0 PSF	HC-ENG EC/WHK
TOT.LD.	37.0 PSF	SEQN- 21095
DUR.FAC.	1.25	
SPACING	24.0"	JREF- 1SSZ7511Z02

(GC11- - B2)

Top chord 2x4 SP #2 Dense
Bot chord 2x4 SP #2 Dense
Webs 2x4 SP #3

(A) Continuous lateral bracing equally spaced on member.

120 mph wind, 15.00 ft mean hgt, ASCE 7-02, CLOSED bldg, Located anywhere in roof, CAT II, EXP B, wind TC DL=4.2 psf, wind BC DL=5.0 psf.

Deflection meets L/240 live and L/180 total load.

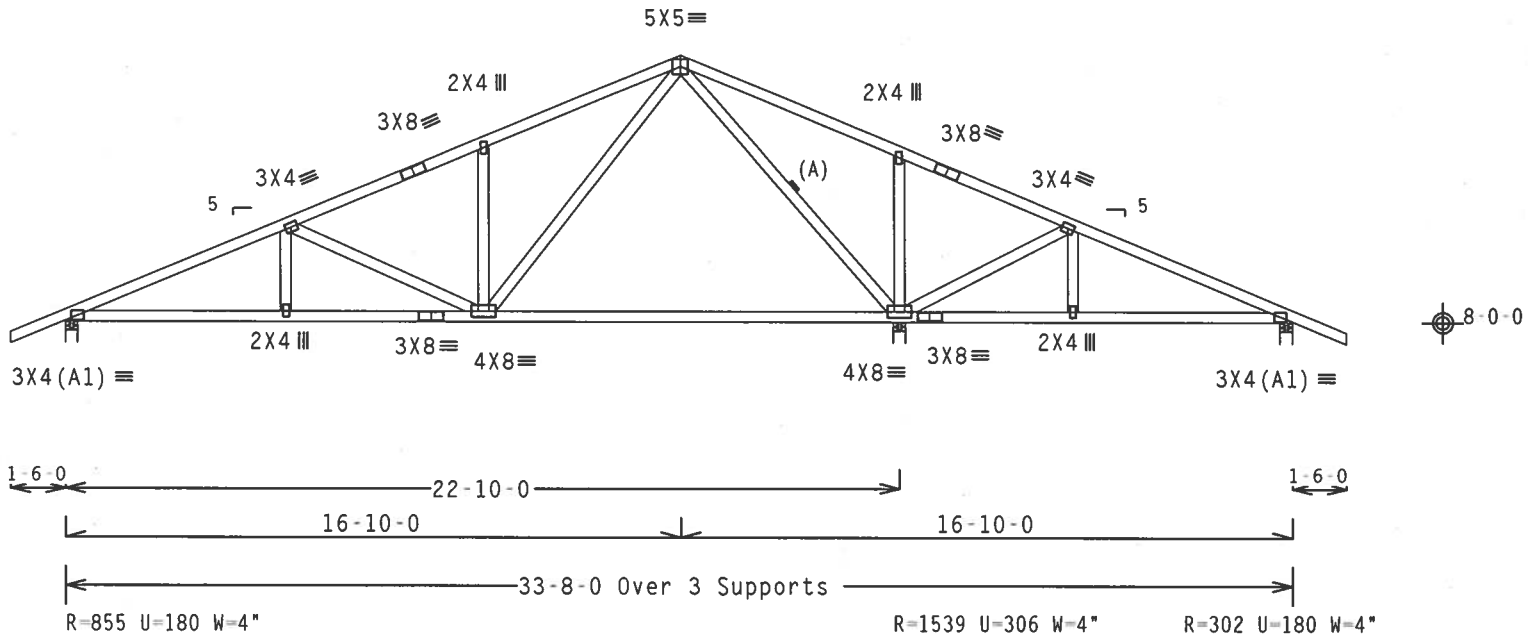

Design Crit: TPI-2002(STD)/FBC

PLT TYP. Wave\R Cq/RT=1.00(1.25)/10(0) 7.22.1122 QTY:11 FL/-/5/-/E/-/- Scale =.1875"/Ft.

ALPINE
Alpine Engineered Products, Inc.
1950 Marley Drive
Haines City, FL 33844
FL Certificate of Authorization # 567

WARNING TRUSSES REQUIRE EXTREME CARE IN FABRICATION, HANDLING, SHIPPING, INSTALLING AND BRACING. REFER TO BCSI 1-03 (BUILDING COMPONENT SAFETY INFORMATION), PUBLISHED BY TPI (TRUSS PLATE INSTITUTE, 583 D'ONOFRIO DR., SUITE 200, MADISON, WI 53719) AND WTCA (WOOD TRUSS COUNCIL OF AMERICA, 6300 ENTERPRISE LN, MADISON, WI 53719) FOR SAFETY PRACTICES PRIOR TO PERFORMING THESE FUNCTIONS. UNLESS OTHERWISE INDICATED, TOP CHORD SHALL HAVE PROPERLY ATTACHED STRUCTURAL PANELS AND BOTTOM CHORD SHALL HAVE A PROPERLY ATTACHED RIGID CEILING.

IMPORTANTFURNISH A COPY OF THIS DESIGN TO THE INSTALLATION CONTRACTOR. ALPINE ENGINEERED PRODUCTS, INC. SHALL NOT BE RESPONSIBLE FOR ANY DEVIATION FROM THIS DESIGN; ANY FAILURE TO BUILD THE TRUSS IN CONFORMANCE WITH TPI: OR FABRICATING, HANDLING, SHIPPING, INSTALLING & BRACING OF TRUSSES. DESIGN CONFORMS WITH APPLICABLE PROVISIONS OF NDS (NATIONAL DESIGN SPEC. BY AF&PA) AND TPI. ALPINE CONNECTOR PLATES ARE MADE OF 20/18/16GA (W.H/S/K) ASTM A653 GRADE 40/60 (W. K/H.S) GALV. STEEL. APPLY PLATES TO EACH FACE OF TRUSS AND, UNLESS OTHERWISE LOCATED ON THIS DESIGN. POSITION PER DRAWINGS 160A-Z. ANY INSPECTION OF PLATES FOLLOWED BY (1) SHALL BE PER ANNEX A3 OF TPI1-2002 SEC.3. A SEAL ON THIS DRAWING INDICATES ACCEPTANCE OF PROFESSIONAL ENGINEERING RESPONSIBILITY SOLELY FOR THE TRUSS COMPONENT DESIGN SHOWN. THE SUITABILITY AND USE OF THIS COMPONENT FOR ANY BUILDING IS THE RESPONSIBILITY OF THE BUILDING DESIGNER PER ANSI/TPI 1 SEC. 2.

JAMES F. COLLINS JR. LICENSE No. 52212 STATE OF FLORIDA PROFESSIONAL ENGINEER
Dec 14 '05

TC LL	20.0 PSF	REF R7511- 91436
TC DL	7.0 PSF	DATE 12/14/05
BC DL	10.0 PSF	DRW HCUSR7511 05348077
BC LL	0.0 PSF	HC-ENG EC/WHK
TOT.LD.	37.0 PSF	SEQN- 21080
DUR.FAC.	1.25	
SPACING	24.0"	JREF- 1SSZ7511Z02

Top chord 2x4 SP #2 Dense
Bot chord 2x4 SP #2 Dense
Webs 2x4 SP #3

Gable end supports 8" max rake overhang.

Deflection meets L/240 live and L/180 total load.

THE BUILDING DESIGNER IS RESPONSIBLE FOR THE DESIGN OF THE ROOF AND CEILING DIAPHRAGMS, GABLE END SHEAR WALLS, AND SUPPORTING SHEAR WALLS. SHEAR WALLS MUST PROVIDE CONTINUOUS LATERAL RESTRAINT TO THE GABLE END. ALL CONNECTIONS TO BE DESIGNED BY THE BUILDING DESIGNER.

SEE DWGS A12015EC0901 FOR ADDITIONAL REQUIREMENTS.

120 mph wind, 15.00 ft mean hgt, ASCE 7-02, CLOSED bldg, Located anywhere in roof, CAT II, EXP B, wind TC DL=4.2 psf, wind BC DL=5.0 psf.

See DWGS A12015EE0405 & GBLLETIN0405 for more requirements.

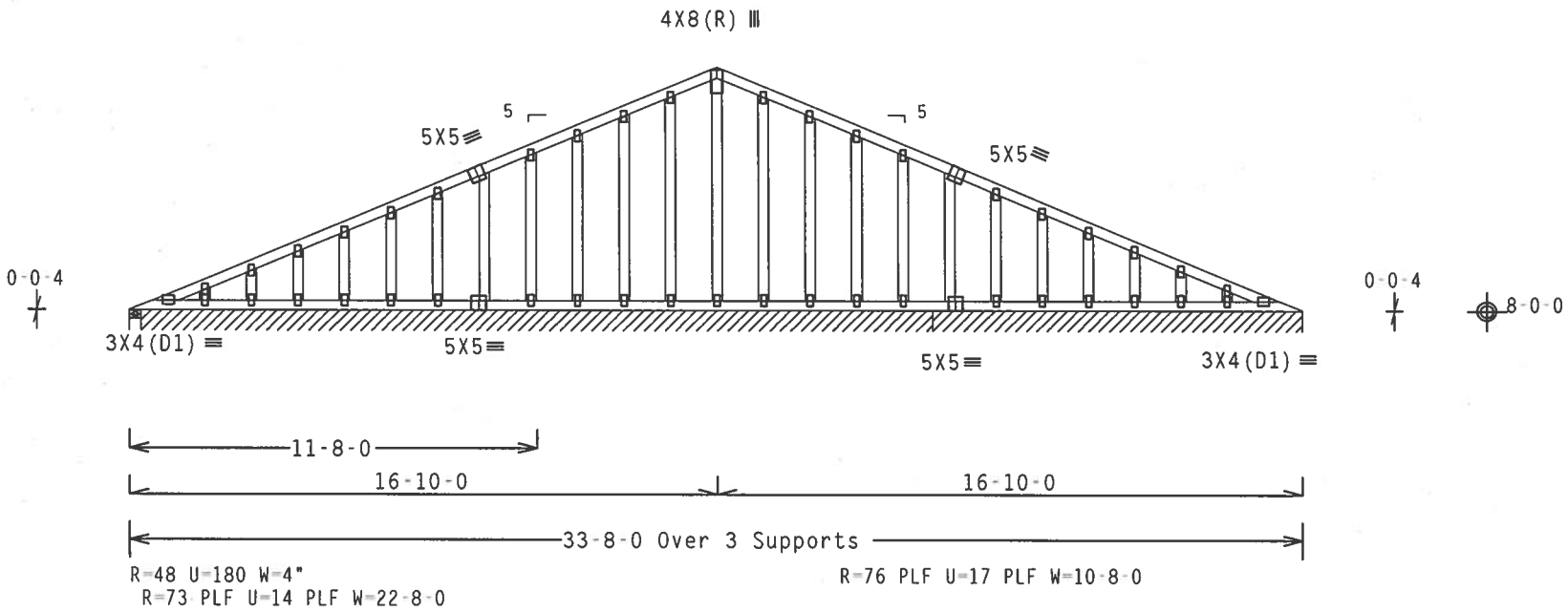

Note: All Plates Are 2X4 Except As Shown.

Design Crit: TPI-2002(STD)/FBC

PLT TYP. Wave\R Cq/RT=1.00(1.25)/10(0) 7.22.1122.01 QTY-1 FL/-/5/-/E/-/- Scale =.1875"/Ft.

ALPINE
Alpine Engineered Products, Inc.
1950 Marley Drive
Haines City, FL 33844
FL Certificate of Authorization # 567

WARNING TRUSSES REQUIRE EXTREME CARE IN FABRICATION, HANDLING, SHIPPING, INSTALLING AND BRACING. REFER TO BCSI 1-03 (BUILDING COMPONENT SAFETY INFORMATION), PUBLISHED BY TPI (TRUSS PLATE INSTITUTE, 583 D'ONOFRIO DR., SUITE 200, MADISON, WI 53719) AND WTCA (WOOD TRUSS COUNCIL OF AMERICA, 6300 ENTERPRISE LN. MADISON, WI 53719) FOR SAFETY PRACTICES PRIOR TO PERFORMING THESE FUNCTIONS. UNLESS OTHERWISE INDICATED, TOP CHORD SHALL HAVE PROPERLY ATTACHED STRUCTURAL PANELS AND BOTTOM CHORD SHALL HAVE A PROPERLY ATTACHED RIGID CEILING.

IMPORTANTFURNISH A COPY OF THIS DESIGN TO THE INSTALLATION CONTRACTOR. ALPINE ENGINEERED PRODUCTS, INC. SHALL NOT BE RESPONSIBLE FOR ANY DEVIATION FROM THIS DESIGN; ANY FAILURE TO BUILD THE TRUSS IN CONFORMANCE WITH TPI; OR FABRICATING, HANDLING, SHIPPING, INSTALLING & BRACING OF TRUSSES. DESIGN CONFORMS WITH APPLICABLE PROVISIONS OF NDS (NATIONAL DESIGN SPEC. BY AF&PA) AND TPI. ALPINE CONNECTOR PLATES ARE MADE OF 20/18/16GA (W,H/S/K) ASTM A653 GRADE 40/60 (W, K/H,S) GALV. STEEL. APPLY PLATES TO EACH FACE OF TRUSS AND, UNLESS OTHERWISE LOCATED ON THIS DESIGN, POSITION PER DRAWINGS 160A-Z. ANY INSPECTION OF PLATES FOLLOWED BY (1) SHALL BE PER ANNEX A3 OF TPI1-2002 SEC.3. A SEAL ON THIS DRAWING INDICATES ACCEPTANCE OF PROFESSIONAL ENGINEERING RESPONSIBILITY SOLELY FOR THE TRUSS COMPONENT DESIGN SHOWN. THE SUITABILITY AND USE OF THIS COMPONENT FOR ANY BUILDING IS THE RESPONSIBILITY OF THE BUILDING DESIGNER PER ANSI/TPI 1 SEC. 2.

JAMES F. COLLINS LICENSE No. 52212 STATE OF FLORIDA PROFESSIONAL ENGINEER

Dec 14, 05

TC LL	20.0 PSF	REF R7511- 91437
TC DL	7.0 PSF	DATE 12/14/05
BC DL	10.0 PSF	DRW HCUSR7511 05348075
BC LL	0.0 PSF	HC-ENG EC/WHK
TOT.LD.	37.0 PSF	SEQN- 21088
DUR.FAC.	1.25	
SPACING	24.0"	JREF- 1SSZ7511Z02

THIS DWG PREPARED FROM COMPUTER INPUT (LOADS & DIMENSIONS) SUBMITTED BY TRUSS MFR.

Top chord 2x4 SP #2 Dense
Bot chord 2x4 SP #2 Dense
Webs 2x4 SP #3

120 mph wind, 15.00 ft mean hgt, ASCE 7-02, CLOSED bldg, Located anywhere in roof, CAT II, EXP B, wind TC DL=4.2 psf, wind BC DL=5.0 psf.

Hipjack supports 6-6-8 setback jacks with no webs.

Deflection meets L/240 live and L/180 total load.

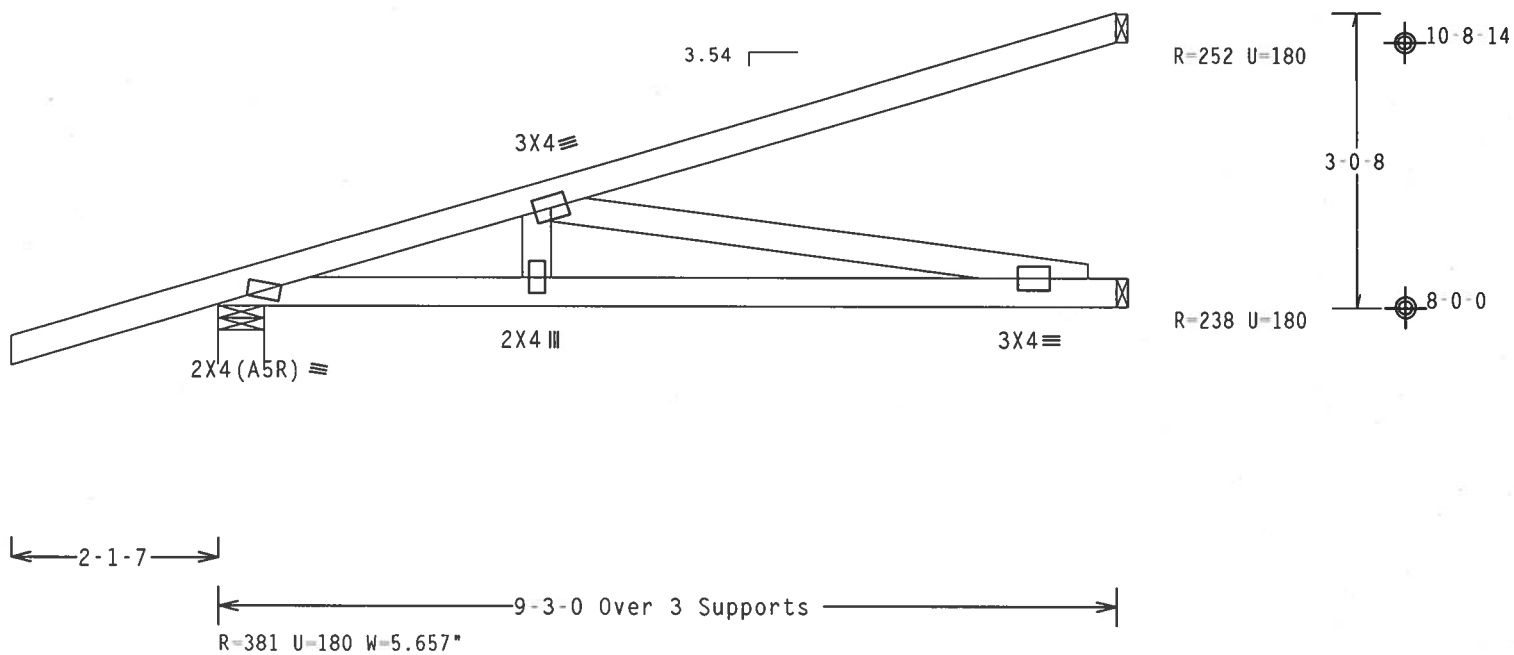

Design Crit: TPI-2002(STD)/FBC

PLT TYP. Wave\R Cq/RT=1.00(1.25)/10(0) 7.22.1122 QTY:2 FL/-/5/-/E/-/- Scale =.5"/Ft.

ALPINE
Alpine Engineered Products, Inc.
1950 Marley Drive
Haines City, FL 33844
FL Certificate of Authorization # 567

WARNING TRUSSES REQUIRE EXTREME CARE IN FABRICATION, HANDLING, SHIPPING, INSTALLING AND BRACING. REFER TO BCSI 1-03 (BUILDING COMPONENT SAFETY INFORMATION), PUBLISHED BY TPI (TRUSS PLATE INSTITUTE, 583 D'ONOFRIO DR., SUITE 200, MADISON, WI 53719) AND WTCA (WOOD TRUSS COUNCIL OF AMERICA, 6300 ENTERPRISE LN, MADISON, WI 53719) FOR SAFETY PRACTICES PRIOR TO PERFORMING THESE FUNCTIONS. UNLESS OTHERWISE INDICATED, TOP CHORD SHALL HAVE PROPERLY ATTACHED STRUCTURAL PANELS AND BOTTOM CHORD SHALL HAVE A PROPERLY ATTACHED RIGID CEILING.

IMPORTANTFURNISH A COPY OF THIS DESIGN TO THE INSTALLATION CONTRACTOR. ALPINE ENGINEERED PRODUCTS, INC. SHALL NOT BE RESPONSIBLE FOR ANY DEVIATION FROM THIS DESIGN; ANY FAILURE TO BUILD THE TRUSS IN CONFORMANCE WITH TPI; OR FABRICATING, HANDLING, SHIPPING, INSTALLING & BRACING OF TRUSSES. DESIGN CONFORMS WITH APPLICABLE PROVISIONS OF NDS (NATIONAL DESIGN SPEC. BY AF&PA) AND TPI. ALPINE CONNECTOR PLATES ARE MADE OF 20/18/16GA (W,H/S/K) ASTM A653 GRADE 40/60 (W, K/H,S) GALV. STEEL. APPLY PLATES TO EACH FACE OF TRUSS AND, UNLESS OTHERWISE LOCATED ON THIS DESIGN, POSITION PER DRAWINGS 160A-Z. ANY INSPECTION OF PLATES FOLLOWED BY (1) SHALL BE PER ANNEX A3 OF TPI1-2002 SEC.3. A SEAL ON THIS DRAWING INDICATES ACCEPTANCE OF PROFESSIONAL ENGINEERING RESPONSIBILITY SOLELY FOR THE TRUSS COMPONENT DESIGN SHOWN. THE SUITABILITY AND USE OF THIS COMPONENT FOR ANY BUILDING IS THE RESPONSIBILITY OF THE BUILDING DESIGNER PER ANSI/TPI 1 SEC. 2.

JAMES F. COLLINS, JR. LICENSE No. 52212 STATE OF FLORIDA PROFESSIONAL ENGINEER
Dec 14 '05

TC LL	20.0 PSF	REF	R7511- 91438
TC DL	7.0 PSF	DATE	12/14/05
BC DL	10.0 PSF	DRW	HCUSR7511 05348083
BC LL	0.0 PSF	HC-ENG	EC/WHK
TOT.LD.	37.0 PSF	SEQN-	21103
DUR.FAC.	1.25		
SPACING	24.0"	JREF-	1SSZ7511Z02

(GC11- - EJ7)

Top chord 2x4 SP #2 Dense
Bot chord 2x4 SP #2 Dense

Deflection meets L/240 live and L/180 total load.

120 mph wind, 15.00 ft mean hgt, ASCE 7-02, CLOSED bldg, not located within 4.50 ft from roof edge, CAT II, EXP B, wind TC DL=4.2 psf, wind BC DL=5.0 psf.

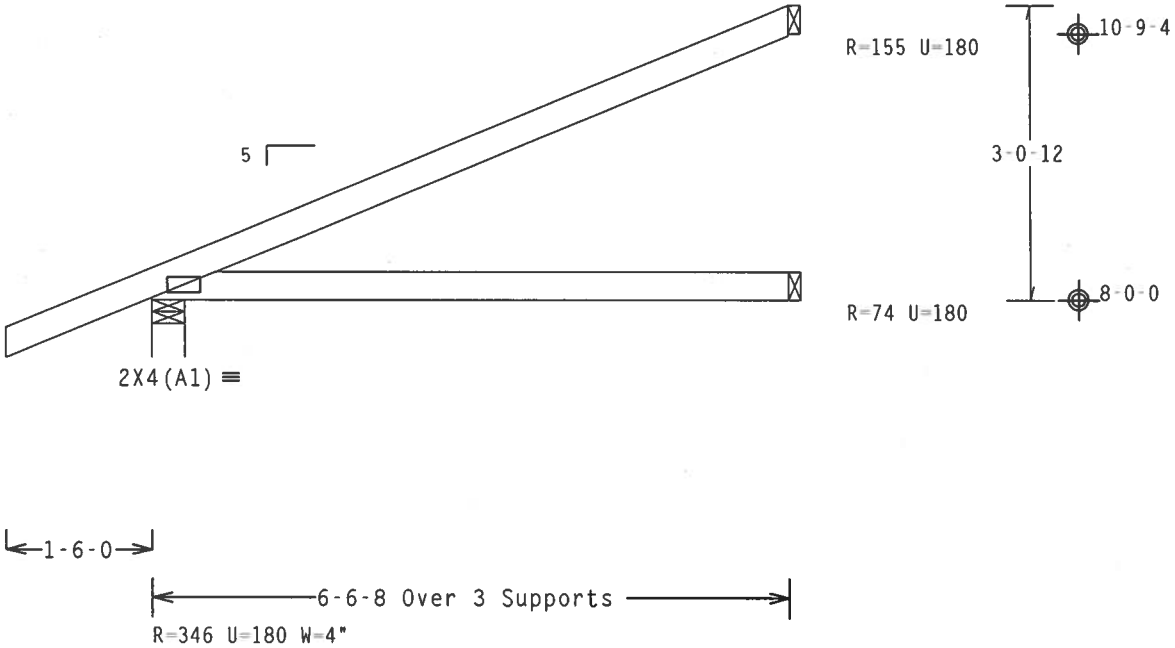

Design Crit: TPI-2002(STD)/FBC

PLT TYP. Wave\R Cq/RT=1.00(1.25)/10(0) 7.22.1122.01 CT:8 FL/-/5/-/E/-/- Scale =.5"/Ft.

ALPINE
Alpine Engineered Products, Inc.
1950 Marley Drive
Haines City, FL 33844
FL Certificate of Authorization # 567

WARNING TRUSSES REQUIRE EXTREME CARE IN FABRICATION, HANDLING, SHIPPING, INSTALLING AND BRACING. REFER TO BCSI 1-03 (BUILDING COMPONENT SAFETY INFORMATION), PUBLISHED BY TPI (TRUSS PLATE INSTITUTE, 583 D'ONOFRIO DR., SUITE 200, MADISON, WI 53719) AND WTCA (WOOD TRUSS COUNCIL OF AMERICA, 6300 ENTERPRISE LN, MADISON, WI 53719) FOR SAFETY PRACTICES PRIOR TO PERFORMING THESE FUNCTIONS. UNLESS OTHERWISE INDICATED, TOP CHORD SHALL HAVE PROPERLY ATTACHED STRUCTURAL PANELS AND BOTTOM CHORD SHALL HAVE A PROPERLY ATTACHED RIGID CEILING.

IMPORTANTFURNISH A COPY OF THIS DESIGN TO THE INSTALLATION CONTRACTOR. ALPINE ENGINEERED PRODUCTS, INC. SHALL NOT BE RESPONSIBLE FOR ANY DEVIATION FROM THIS DESIGN; ANY FAILURE TO BUILD THE TRUSS IN CONFORMANCE WITH TPI; OR FABRICATING, HANDLING, SHIPPING, INSTALLING & BRACING OF TRUSSES. DESIGN CONFORMS WITH APPLICABLE PROVISIONS OF NDS (NATIONAL DESIGN SPEC. BY AF&PA) AND TPI. ALPINE CONNECTOR PLATES ARE MADE OF 20/18/16GA (W,H/S/K) ASTM A653 GRADE 40/60 (W, K/H,S) GALV. STEEL. APPLY PLATES TO EACH FACE OF TRUSS AND, UNLESS OTHERWISE LOCATED ON THIS DESIGN, POSITION PER DRAWINGS 160A-Z. ANY INSPECTION OF PLATES FOLLOWED BY (1) SHALL BE PER ANNEX A3 OF TPI1-2002 SEC.3. A SEAL ON THIS DRAWING INDICATES ACCEPTANCE OF PROFESSIONAL ENGINEERING RESPONSIBILITY SOLELY FOR THE TRUSS COMPONENT DESIGN SHOWN. THE SUITABILITY AND USE OF THIS COMPONENT FOR ANY BUILDING IS THE RESPONSIBILITY OF THE BUILDING DESIGNER PER ANSI/TPI 1 SEC. 2.

JAMES F. COLLINS JR. LICENSE No. 52212 STATE OF FLORIDA PROFESSIONAL ENGINEER

Dec

TC LL	20.0 PSF	REF R7511- 91439
TC DL	7.0 PSF	DATE 12/14/05
BC DL	10.0 PSF	DRW HCUSR7511 05348084
BC LL	0.0 PSF	HC-ENG EC/WHK
TOT.LD.	37.0 PSF	SEQN- 21098
DUR.FAC.	1.25	
SPACING	24.0"	JREF- 1SSZ7511Z02

(GC11- - CJ5)

THIS DWG PREPARED FROM COMPUTER INPUT (LOADS & DIMENSIONS) SUBMITTED BY TRUSS MFR.

Top chord 2x4 SP #2 Dense
Bot chord 2x4 SP #2 Dense

Deflection meets L/240 live and L/180 total load.

120 mph wind, 15.00 ft mean hgt, ASCE 7-02, CLOSED bldg, not located within 4.50 ft from roof edge, CAT II, EXP B, wind TC DL=4.2 psf, wind BC DL=5.0 psf.

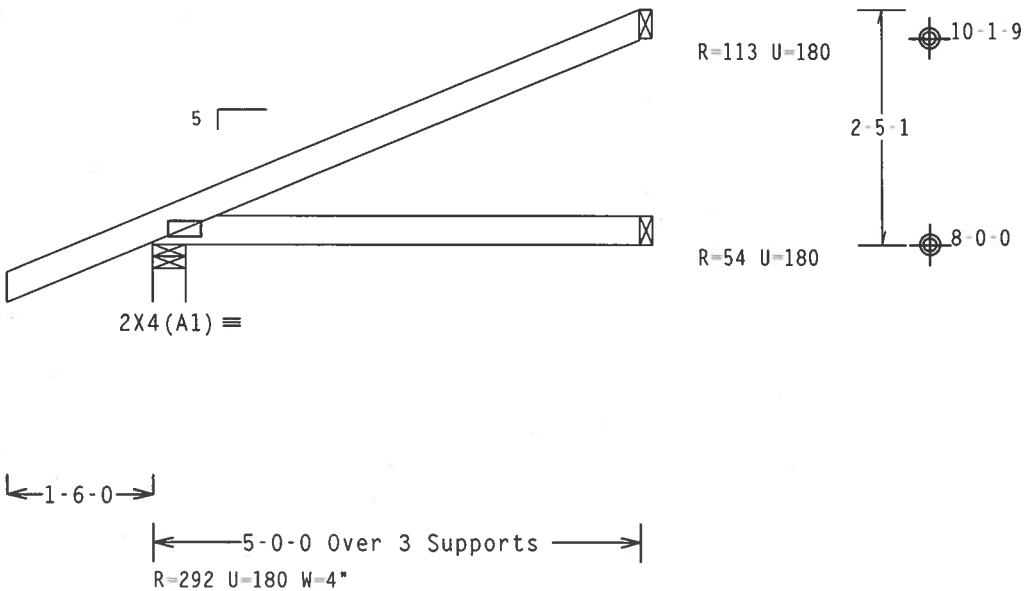

Design Crit: TPI-2002(STD)/FBC

PLT TYP. Wave\R Cq/RT=1.00(1.25)/10(0) 7.22.1122.01 QTY:4 FL/-/5/-/E/-/- Scale =.5"/Ft.

ALPINE
Alpine Engineered Products, Inc.
1950 Marley Drive
Haines City, FL 33844
FL Certificate of Authorization # 567

WARNING TRUSSES REQUIRE EXTREME CARE IN FABRICATION, HANDLING, SHIPPING, INSTALLING AND BRACING. REFER TO BCSI 1-03 (BUILDING COMPONENT SAFETY INFORMATION), PUBLISHED BY TPI (TRUSS PLATE INSTITUTE, 583 D'ONOFRIO DR., SUITE 200, MADISON, WI 53719) AND WTCA (WOOD TRUSS COUNCIL OF AMERICA, 6300 ENTERPRISE LN, MADISON, WI 53719) FOR SAFETY PRACTICES PRIOR TO PERFORMING THESE FUNCTIONS. UNLESS OTHERWISE INDICATED, TOP CHORD SHALL HAVE PROPERLY ATTACHED STRUCTURAL PANELS AND BOTTOM CHORD SHALL HAVE A PROPERLY ATTACHED RIGID CEILING.

IMPORTANTFURNISH A COPY OF THIS DESIGN TO THE INSTALLATION CONTRACTOR. ALPINE ENGINEERED PRODUCTS, INC. SHALL NOT BE RESPONSIBLE FOR ANY DEVIATION FROM THIS DESIGN; ANY FAILURE TO BUILD THE TRUSS IN CONFORMANCE WITH TPI; OR FABRICATING, HANDLING, SHIPPING, INSTALLING & BRACING OF TRUSSES. DESIGN CONFORMS WITH APPLICABLE PROVISIONS OF NDS (NATIONAL DESIGN SPEC. BY AF&PA) AND TPI. ALPINE CONNECTOR PLATES ARE MADE OF 20/18/16GA (W,H/S/K) ASTM A653 GRADE 40/60 (W, K/H,S) GALV. STEEL. APPLY PLATES TO EACH FACE OF TRUSS AND, UNLESS OTHERWISE LOCATED ON THIS DESIGN, POSITION PER DRAWINGS 160A-Z. ANY INSPECTION OF PLATES FOLLOWED BY (1) SHALL BE PER ANNEX A3 OF TPI1-2002 SEC.3. A SEAL ON THIS DRAWING INDICATES ACCEPTANCE OF PROFESSIONAL ENGINEERING RESPONSIBILITY SOLELY FOR THE TRUSS COMPONENT DESIGN SHOWN. THE SUITABILITY AND USE OF THIS COMPONENT FOR ANY BUILDING IS THE RESPONSIBILITY OF THE BUILDING DESIGNER PER ANSI/TPI 1 SEC. 2.

JAMES F. COLLINS, JR. LICENSE No. 52212 STATE OF FLORIDA PROFESSIONAL ENGINEER

Dec

TC LL	20.0 PSF	REF R7511- 91440
TC DL	7.0 PSF	DATE 12/14/05
BC DL	10.0 PSF	DRW HCUSR7511 05348085
BC LL	0.0 PSF	HC-ENG EC/WHK
TOT.LD.	37.0 PSF	SEQN- 21106
DUR.FAC.	1.25	
SPACING	24.0"	JREF- 1SSZ7511Z02

(GC11- - CJ3)

Top chord 2x4 SP #2 Dense
Bot chord 2x4 SP #2 Dense

Deflection meets L/240 live and L/180 total load.

120 mph wind, 15.00 ft mean hgt, ASCE 7-02, CLOSED bldg, Located anywhere in roof, CAT II, EXP B, wind TC DL=4.2 psf, wind BC DL=5.0 psf.

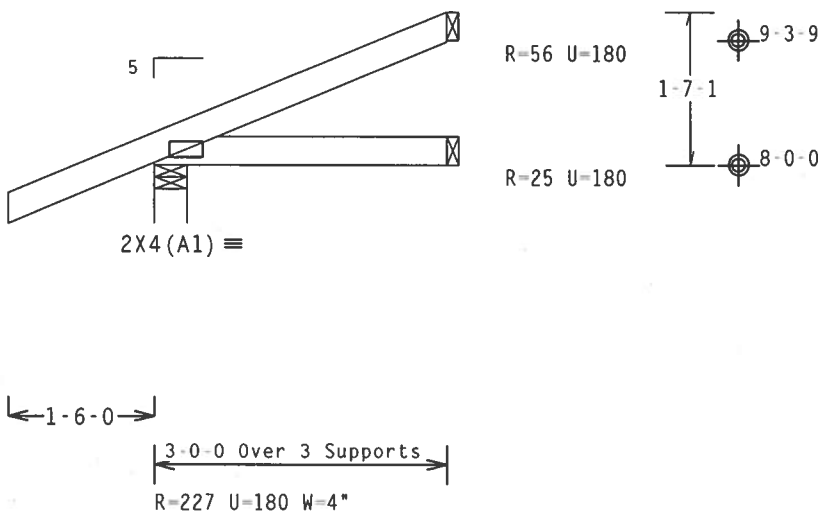

Design Crit: TPI-2002(STD)/FBC

PLT TYP. Wave\R Cq/RT=1.00(1.25)/10(0) 7.22.1122 QTY:4 FL/-/5/-/E/-/- Scale =.5"/Ft.

ALPINE
Alpine Engineered Products, Inc.
1950 Marley Drive
Haines City, FL 33844
FL Certificate of Authorization # 567

WARNING TRUSSES REQUIRE EXTREME CARE IN FABRICATION, HANDLING, SHIPPING, INSTALLING AND BRACING. REFER TO BCSI 1-03 (BUILDING COMPONENT SAFETY INFORMATION), PUBLISHED BY TPI (TRUSS PLATE INSTITUTE, 583 D'ONOFRIO DR., SUITE 200, MADISON, WI 53719) AND WTCA (WOOD TRUSS COUNCIL OF AMERICA, 6300 ENTERPRISE LN, MADISON, WI 53719) FOR SAFETY PRACTICES PRIOR TO PERFORMING THESE FUNCTIONS. UNLESS OTHERWISE INDICATED, TOP CHORD SHALL HAVE PROPERLY ATTACHED STRUCTURAL PANELS AND BOTTOM CHORD SHALL HAVE A PROPERLY ATTACHED RIGID CEILING.

IMPORTANTFURNISH A COPY OF THIS DESIGN TO THE INSTALLATION CONTRACTOR. ALPINE ENGINEERED PRODUCTS, INC. SHALL NOT BE RESPONSIBLE FOR ANY DEVIATION FROM THIS DESIGN; ANY FAILURE TO BUILD THE TRUSS IN CONFORMANCE WITH TPI; OR FABRICATING, HANDLING, SHIPPING, INSTALLING & BRACING OF TRUSSES. DESIGN CONFORMS WITH APPLICABLE PROVISIONS OF NDS (NATIONAL DESIGN SPEC. BY AF&PA) AND TPI. ALPINE CONNECTOR PLATES ARE MADE OF 20/18/16GA (W.H/S/K) ASTM A653 GRADE 40/60 (W. K/H.S) GALV. STEEL. APPLY PLATES TO EACH FACE OF TRUSS AND, UNLESS OTHERWISE LOCATED ON THIS DESIGN, POSITION PER DRAWINGS 160A-Z. ANY INSPECTION OF PLATES FOLLOWED BY (!) SHALL BE PER ANNEX A3 OF TPI1-2002 SEC.3. A SEAL ON THIS DRAWING INDICATES ACCEPTANCE OF PROFESSIONAL ENGINEERING RESPONSIBILITY SOLELY FOR THE TRUSS COMPONENT DESIGN SHOWN. THE SUITABILITY AND USE OF THIS COMPONENT FOR ANY BUILDING IS THE RESPONSIBILITY OF THE BUILDING DESIGNER PER ANSI/TPI 1 SEC. 2.

JAMES F. COLLINS, JR. LICENSE No. 52212 STATE OF FLORIDA PROFESSIONAL ENGINEER
Dec 14,05

TC LL	20.0 PSF	REF R7511- 91441
TC DL	7.0 PSF	DATE 12/14/05
BC DL	10.0 PSF	DRW HCUSR7511 05348086
BC LL	0.0 PSF	HC-ENG EC/WHK
TOT.LD.	37.0 PSF	SEQN- 21109
DUR.FAC.	1.25	
SPACING	24.0"	JREF- 1SSZ7511Z02

(GC11- - CJ1)

Top chord 2x4 SP #2 Dense
Bot chord 2x4 SP #2 Dense

Deflection meets L/240 live and L/180 total load.

120 mph wind, 15.00 ft mean hgt, ASCE 7-02, CLOSED bldg, Located anywhere in roof, CAT II, EXP B, wind TC DL=4.2 psf, wind BC DL=5.0 psf.

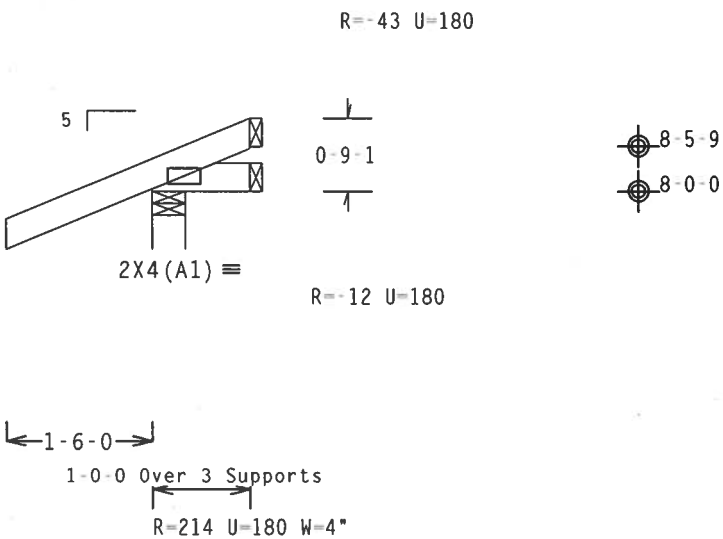

Design Crit: TPI-2002(STD)/FBC

PLT TYP. Wave\R Cq/RT=1.00(1.25)/10(0) 7.22.1122.04 QTY:4 FL/-/5/-/E/-/- Scale =.5"/Ft.

ALPINE
Alpine Engineered Products, Inc.
1950 Marley Drive
Haines City, FL 33844
FL Certificate of Authorization # 567

WARNING TRUSSES REQUIRE EXTREME CARE IN FABRICATION, HANDLING, SHIPPING, INSTALLING AND BRACING. REFER TO BCSI 1-03 (BUILDING COMPONENT SAFETY INFORMATION), PUBLISHED BY TPI (TRUSS PLATE INSTITUTE, 583 D'ONOFRIO DR., SUITE 200, MADISON, WI 53719) AND WTCA (WOOD TRUSS COUNCIL OF AMERICA, 6300 ENTERPRISE LN, MADISON, WI 53719) FOR SAFETY PRACTICES PRIOR TO PERFORMING THESE FUNCTIONS. UNLESS OTHERWISE INDICATED, TOP CHORD SHALL HAVE PROPERLY ATTACHED STRUCTURAL PANELS AND BOTTOM CHORD SHALL HAVE A PROPERLY ATTACHED RIGID CEILING.

IMPORTANTFURNISH A COPY OF THIS DESIGN TO THE INSTALLATION CONTRACTOR. ALPINE ENGINEERED PRODUCTS, INC. SHALL NOT BE RESPONSIBLE FOR ANY DEVIATION FROM THIS DESIGN; ANY FAILURE TO BUILD THE TRUSS IN CONFORMANCE WITH TPI; OR FABRICATING, HANDLING, SHIPPING, INSTALLING & BRACING OF TRUSSES. DESIGN CONFORMS WITH APPLICABLE PROVISIONS OF NDS (NATIONAL DESIGN SPEC. BY AF&PA) AND TPI. ALPINE CONNECTOR PLATES ARE MADE OF 20/18/16GA (W,H/S/K) ASTM A653 GRADE 40/60 (W. K/H.S) GALV. STEEL. APPLY PLATES TO EACH FACE OF TRUSS AND, UNLESS OTHERWISE LOCATED ON THIS DESIGN, POSITION PER DRAWINGS 160A-Z. ANY INSPECTION OF PLATES FOLLOWED BY (1) SHALL BE PER ANNEX A3 OF TPI1-2002 SEC.3. A SEAL ON THIS DRAWING INDICATES ACCEPTANCE OF PROFESSIONAL ENGINEERING RESPONSIBILITY SOLELY FOR THE TRUSS COMPONENT DESIGN SHOWN. THE SUITABILITY AND USE OF THIS COMPONENT FOR ANY BUILDING IS THE RESPONSIBILITY OF THE BUILDING DESIGNER PER ANSI/TPI 1 SEC. 2.

JAMES F. COLLINS, JR. LICENSE No. 52212 STATE OF FLORIDA PROFESSIONAL ENGINEER
Dec 14 2005

TC LL	20.0 PSF	REF R7511- 91442
TC DL	7.0 PSF	DATE 12/14/05
BC DL	10.0 PSF	DRW HCUSR7511 05348087
BC LL	0.0 PSF	HC-ENG EC/WHK
TOT.LD.	37.0 PSF	SEQN- 21112
DUR.FAC.	1.25	
SPACING	24.0"	JREF- 1SSZ7511Z02

CLB WEB BRACE SUBSTITUTION

THIS DETAIL IS TO BE USED WHEN CONTINUOUS LATERAL BRACING (CLB) IS SPECIFIED ON AN ALPINE TRUSS DESIGN BUT AN ALTERNATIVE WEB BRACING METHOD IS DESIRED.

NOTES:

THIS DETAIL IS ONLY APPLICABLE FOR CHANGING THE SPECIFIED CLB SHOWN ON SINGLE PLY SEALED DESIGNS TO T-BRACING OR SCAB BRACING.

ALTERNATIVE BRACING SPECIFIED IN CHART BELOW MAY BE CONSERVATIVE. FOR MINIMUM ALTERNATIVE BRACING, RE-RUN DESIGN WITH APPROPRIATE BRACING.

WEB MEMBER SIZE	SPECIFIED CLB BRACING	ALTERNATIVE BRACING T OR L-BRACE	ALTERNATIVE BRACING SCAB BRACE
2X3 OR 2X4	1 ROW	2X4	1-2X4
2X3 OR 2X4	2 ROWS	2X6	2-2X4
2X6	1 ROW	2X4	1-2X6
2X6	2 ROWS	2X6	2-2X4(*)
2X8	1 ROW	2X6	1-2X8
2X8	2 ROWS	2X6	2-2X6(*)

T-BRACE, L-BRACE AND SCAB BRACE TO BE SAME SPECIES AND GRADE OR BETTER THAN WEB MEMBER UNLESS SPECIFIED OTHERWISE ON ENGINEER'S SEALED DESIGN.

(*) CENTER SCAB ON WIDE FACE OF WEB. APPLY (1) SCAB TO EACH FACE OF WEB.

T-BRACING OR L-BRACING:

APPLY TO EITHER SIDE OF WEB NARROW FACE

ATTACH WITH 16d NAILS AT 6" O.C.

BRACE IS A MINIMUM 80% OF WEB MEMBER LENGTH

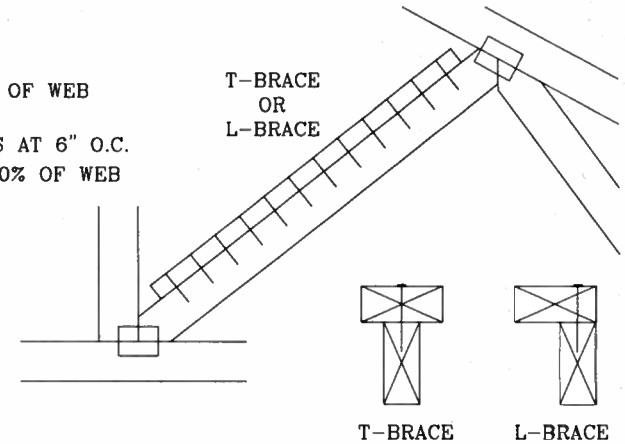

SCAB BRACING:

APPLY SCAB(S) TO WIDE FACE OF WEB.

NO MORE THAN (1) SCAB PER FACE.

ATTACH WITH 10d OR .128"x3" GUN NAILS AT 6" O.C. BRACE IS A MINIMUM 80% OF WEB MEMBER LENGTH

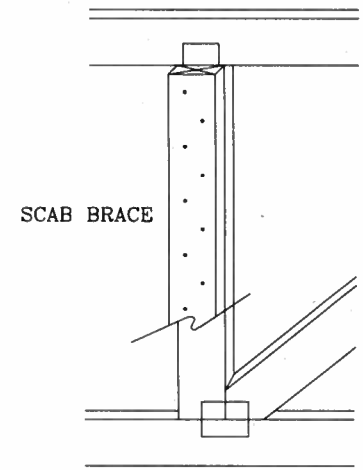

THIS DRAWING REPLACES DRAWING 579,640

ALPINE

ALPINE ENGINEERED PRODUCTS, INC.
POMPANO BEACH, FLORIDA

WARNING TRUSSES REQUIRE EXTREME CARE IN FABRICATING, HANDLING, SHIPPING, INSTALLING AND BRACING. REFER TO BCSI 1-03 (BUILDING COMPONENT SAFETY INFORMATION), PUBLISHED BY TPI (TRUSS PLATE INSTITUTE, 583 D'ONOFRIO DR., SUITE 200, MADISON, WI. 53719) AND WTCA (WOOD TRUSS COUNCIL OF AMERICA, 6300 ENTERPRISE LN, MADISON, WI 53719) FOR SAFETY PRACTICES PRIOR TO PERFORMING THESE FUNCTIONS. UNLESS OTHERWISE INDICATED, TOP CHORD SHALL HAVE PROPERLY ATTACHED STRUCTURAL PANELS AND BOTTOM CHORD SHALL HAVE A PROPERLY ATTACHED RIGID CEILING.

IMPORTANT FURNISH COPY OF THIS DESIGN TO INSTALLATION CONTRACTOR. ALPINE ENGINEERED PRODUCTS, INC., SHALL NOT BE RESPONSIBLE FOR ANY DEVIATION FROM THIS DESIGN; ANY FAILURE TO BUILD THE TRUSS IN CONFORMANCE WITH TPI; OR FABRICATING, HANDLING, SHIPPING, INSTALLING & BRACING OF TRUSSES. DESIGN CONFORMS WITH APPLICABLE PROVISIONS OF NDS (NATIONAL DESIGN SPEC, BY AF&PA) AND TPI. ALPINE CONNECTOR PLATES ARE MADE OF 20/18/16GA (W,H/S/K) ASTM A653 GRADE 40/60 (W,K/H,S) GALV. STEEL. APPLY PLATES TO EACH FACE OF TRUSS AND, UNLESS OTHERWISE LOCATED ON THIS DESIGN, POSITION PER DRAWINGS 160A-Z. ANY INSPECTION OF PLATES FOLLOWED BY (I) SHALL BE PER ANNEX A3 OF TPI 1-2002 SEC. 3. A SEAL ON THIS DRAWING INDICATES ACCEPTANCE OF PROFESSIONAL ENGINEERING RESPONSIBILITY SOLELY FOR THE TRUSS COMPONENT DESIGN SHOWN. THE SUITABILITY AND USE OF THIS COMPONENT FOR ANY BUILDING IS THE RESPONSIBILITY OF THE BUILDING DESIGNER, PER ANSI/TPI 1 SEC. 2.

JAMES F. COLLINS JR. LICENSE No. 52212 STATE OF FLORIDA PROFESSIONAL ENGINEER

TC LL	PSF	REF CLB SUBST.
TC DL	PSF	DATE 11/26/03
BC DL	PSF	DRWG BRCLBSUB1103
BC LL	PSF	-ENG MLH/KAR
TOT. LD.	PSF	
DUR. FAC.		
SPACING		

ARROW EXTERMINATORS
TERMITE AND PEST CONTROL

5602 N.W. 13th STREET
GAINESVILLE, FLORIDA 32653-2198

P.O. BOX 5875
GAINESVILLE, FLORIDA 32627-5875

PHONE (352) 373-3642
FAX (352) 373-9037

24067

CERTIFICATE OF PROTECTIVE TREATMENT

Builder: G.C Constr.

Date: 8-2-06 Time: _____ AM _____ PM

Site Location: 362 SW Thorne Ln. Ft. white

Area Treated: Backfill peremiter

Product Used: DiFen IT Chemical Used: Difenthrin

% Concentration: .06% # Gallons Used: 60

Applicator: Jay

ARROW EXTERMINATORS
TERMITE AND PEST CONTROL

24067

5602 N.W. 13th STREET
GAINESVILLE, FLORIDA 32653-2198

P.O. BOX 5875
GAINESVILLE, FLORIDA 32627-5875

PHONE (352) 373-3642
FAX (352) 373-9037

CERTIFICATE OF PROTECTIVE TREATMENT

Builder: G&C Const

Date: 2-27-06 Time: _____ AM _____ PM

Site Location: 362 SW Thorne LN

Area Treated: Living Garage Entry

Product Used: Bifen IT Chemical Used: Bifenthrin

% Concentration: .06% # Gallons Used: 280

Applicator: Jerry

Meggie

Columbia County Building Department
Culvert Waiver

Culvert Waiver No. 000000957

DATE: 01/23/2006 BUILDING PERMIT NO. 24067

APPLICANT GARY CLEMMONS PHONE 386 418-2114

ADDRESS P.O. BOX 5893 GAINESVILLE FL 32627

OWNER GARY CLEMMONS PHONE 386 418-2114

ADDRESS 362 SW THORNE LANE FT. WHITE FL 32038

CONTRACTOR GARY CLEMMONS/GC CONSTRUCTION PHONE 386 418-2114

LOCATION OF PROPERTY 47S, TL ON 27, TR ON MAPLETON, TR ON HEFLIN, TL ON THORNE LANE, 7TH LOT ON LEFT

SUBDIVISION/LOT/BLOCK/PHASE/UNIT SANTA FE RIVER PLANT 45

PARCEL ID # 30-7S-17-10058-635

I HEREBY CERTIFY THAT I UNDERSTAND AND WILL FULLY COMPLY WITH THE DECISION OF THE COLUMBIA COUNTY PUBLIC WORKS DEPARTMENT IN CONNECTION WITH THE HEREIN PROPOSED APPLICATION.

SIGNATURE:

A SEPARATE CHECK IS REQUIRED
MAKE CHECKS PAYABLE TO BCC

Amount Paid 50.00

PUBLIC WORKS DEPARTMENT USE ONLY

I HEREBY CERTIFY THAT I HAVE EXAMINED THIS APPLICATION AND DETERMINED THAT THE CULVERT WAIVER IS:

✓ APPROVED _____ NOT APPROVED - NEEDS A CULVERT PERMIT

COMMENTS:

SIGNED: Willie Mootes DATE: 1-6-06

ANY QUESTIONS PLEASE CONTACT THE PUBLIC WORKS DEPARTMENT AT 386-752-5955.

135 NE Hernando Ave., Suite B-21
Lake City, FL 32055
Phone: 386-758-1008 Fax: 386-758-2160

RECEIVED
JAN 23 2006
BY:

COLUMBIA COUNTY GAINESVILLE, FLORIDA

CERTIFICATE OF

OCCUPANCY

COLUMBIA COUNTY, FLORIDA

Department of Building and Zoning Inspection

This Certificate of Occupancy is issued to the below named permit holder for the building and premises at the below named location, and certifies that the work has been completed in accordance with the Columbia County Building Code.

Parcel Number 30-7S-17-10058-635 **Building permit No.** 000024067

Use Classification SFD,UTILITY **Fire:** 11.84

Permit Holder GARY CLEMMONS/GC CONSTRUCTION **Waste:** 24.50

Owner of Building GARY CLEMMONS **Total:** 36.34

Location: 362 SW THORNE LANE, FT. WHITE, FL

Date: 08/24/2006

Harry Dicks

Building Inspector

POST IN A CONSPICUOUS PLACE
(Business Places Only)

GADCO®

Quality Garage Doors
General American Door Company

IMPORTANT!
WINDLOAD DOORS

ATTACHED ENVELOPE CONTAINS YOUR WINDLOAD INSTALLATION DRAWINGS AND LABEL AS WELL AS A DUPLICATE SET OF WARNING LABELS. *THE INSTALLER OF THIS DOOR IS RESPONSIBLE FOR REPLACEMENT OF WARNING LABELS THAT ARE COVERED WITH STRUTS OR CHANNELS AS REQUIRED BY THE WINDLOAD DRAWINGS.* THE BOTTOM FIXTURE WARNING LABELS MUST BE NEAR THE BOTTOM FIXTURES. ALL LABELS MUST BE LEGIBLE UPON COMPLETION OF THE DOOR INSTALLATION.

A10570 1107-00035

REV.	DATE	BY	DESCRIPTION

NOTES:

1. TESTED TO POSITIVE AND NEGATIVE 20 PSF DESIGN AND POSITIVE AND NEGATIVE 30 PSF TEST PRESSURES PER FBC 2001-BUILDING, ASCE 7-02, AND ASTM-E330.
2. MAXIMUM SECTION HEIGHT= 21"
3. SECTION HEIGHTS OF 21.00" AND 19.50" ARE AVAILABLE AND MAY BE USED IN ANY COMBINATION TO ACHIEVE VARIOUS DOOR HEIGHTS.
4. WINDOWS MAY BE INSTALLED IN THE TOP SECTION. (AS TESTED WITH 1/8" DSB GLASS OR EQUIVALENT) OR IN THE SECTION IMMEDIATELY BELOW THE TOP SECTION.
5. MINIMUM LENGTH OF ROLLER STEM IS 5¼" (7" AS TESTED)
6. THE STRUT PLACEMENT ON DOOR MUST BE CONSISTENT WITH THE DOOR SHOWN.
7. STRUTS SECURED AT ALL LOCATIONS WITH TEK SCREWS.
8. QUANTITY OF SIDE LOCKS CAN BE 0,1, OR (2 AS TESTED).
9. DROP IN TYPE OF INSULATION IS OPTIONAL

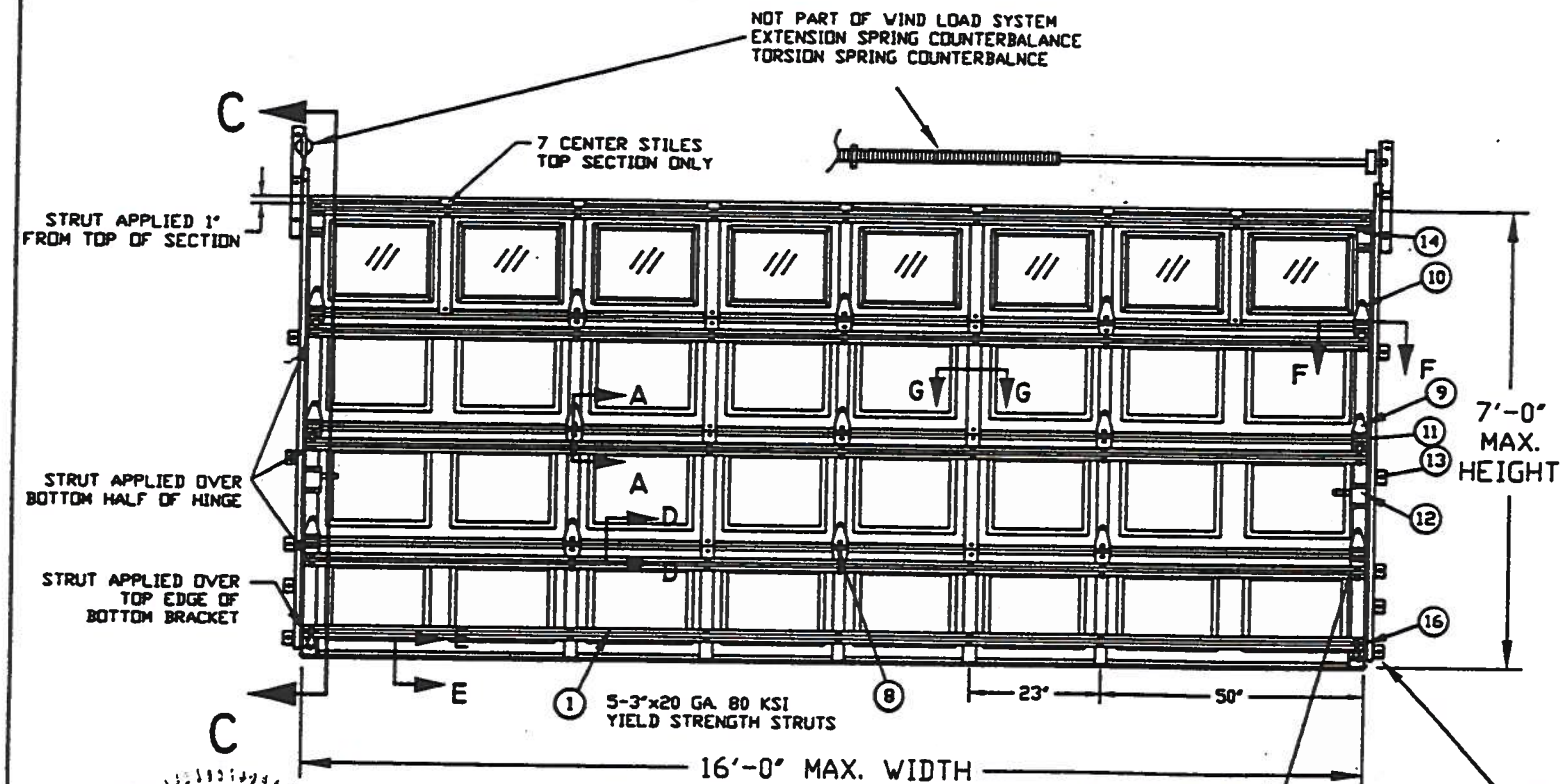

INSIDE ELEVATION

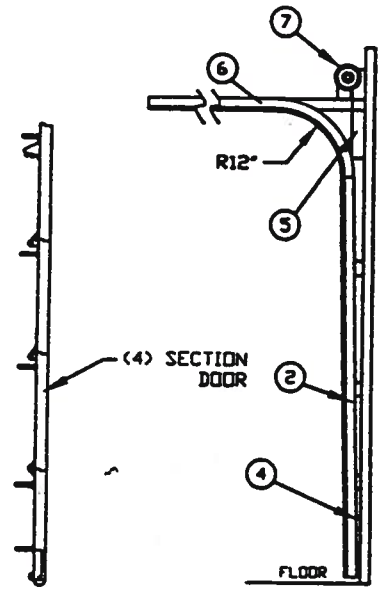

SEC C-C

VERTICAL TRACK, (16 GA.)

12 GA. JAMB BRACKETS, MAXIMUM SPACING = 19-1/2" WITH LOWEST BRACKET APPROX. 3" FROM FLOOR, 2ND BRACKET NEAR THE HORIZONTAL ℄ OF THE BOTTOM SECTION, AND 3RD BRACKET NEAR THE TOP OF THE BOTTOM SECTION

TEST REPORTS ON FILE VIDEO 10/19/00 (00293)

DESIGN LOAD +20.0 PSF & -20.0 PSF
TEST LOAD +30.0 PSF & -30.0 PSF

GADCO DOORS
SERIES 7400, EXTERIOR STEEL =.017 MIN (AS TESTED)
SERIES 7825, EXTERIOR STEEL =.019" MIN
SERIES 7524, EXTERIOR STEEL =.024" MIN
(TESTED) WITH WINDOWS

MAXIMUM DOOR WIDTH	MAXIMUM DOOR HEIGHT	TYPICAL CTR. STILE SPACING	STRUTS 80 KSI SIZE	STRUTS 80 KSI QTY.	VERTICAL TRACK
16'	7'	23"	3"	5	2 IN.

GADCO®
GENERAL AMERICAN DOOR COMPANY
5050 BASELINE ROAD
MONTGOMERY, IL 60538

SCALE: NTS | APPROVED BY: | DRAWN BY: B. VIEDMAN
DATE: 6-9-04 | REVISED: - -
DESCRIPTION: 16' X 7' MAX. RAISED PANEL STEEL DOOR -WINDLOAD ±20 PSF
PART NUMBER: PAGE 1 OF 3 | DRAWING NUMBER: J13220-1

THE SEAL ON THIS DRAWING ONLY CERTIFIES THAT THE PRODUCT(S) ILLUSTRATED AND DESCRIBED HEREIN REPRESENT THE CONFIGURATION(S), DIMENSIONS AND INSTALLATION(S) OF THE DOOR AS TESTED.

6/13/04

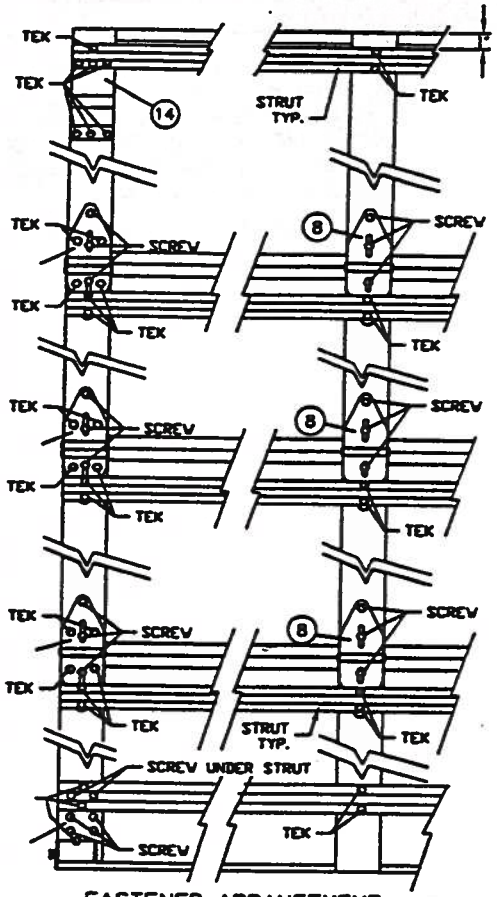

FASTENER ARRANGEMENT

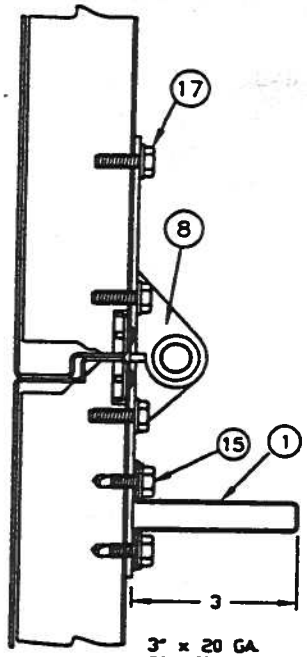

SEC A-A
(AS TESTED)

3" x 20 GA.
80 KSI
YIELD STRENGTH
HEMMED STRUT

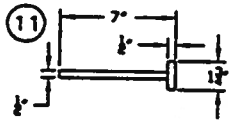

ROLLER 10 BALLS.

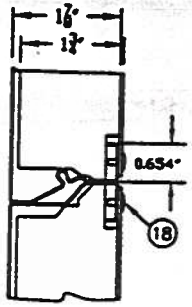

SEC D-D
PAN ATTACHMENT
TO STILE
(OPTIONAL)

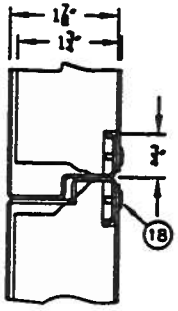

SEC D-D
PAN ATTACHMENT
TO STILE
(AS TESTED)

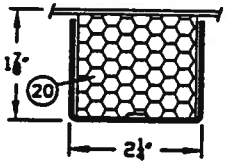

SEC G-G
CENTER STILE
20 GA. GALVANIZED

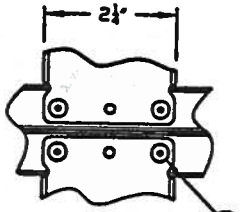

PAN ATTACHMENT
TO STILE

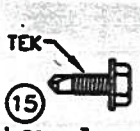

¼-20 x ¾"
HWH TEK SCREW

¼-20 x ¾"
HEX WASHERHEAD
SCREW

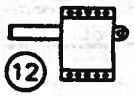

SIDE LOCK.

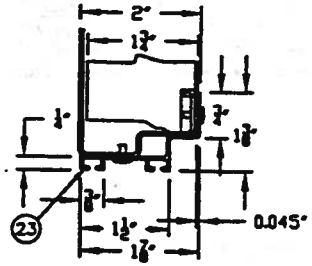

SEC E-E

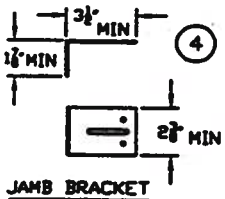

JAMB BRACKET
12 GA. MIN.

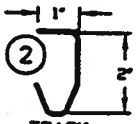

TRACK
16 GA. MIN.

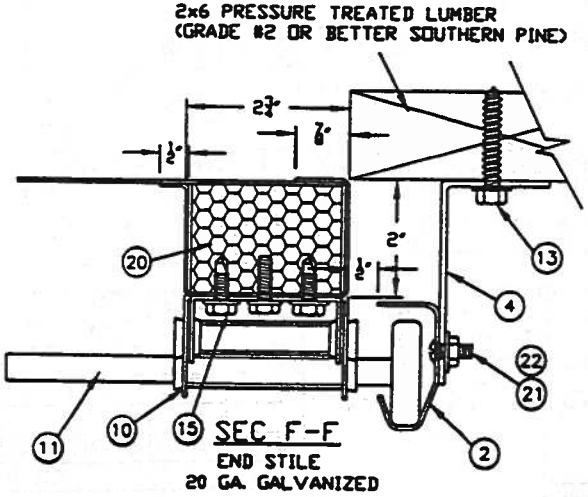

SEC F-F
END STILE
20 GA. GALVANIZED

ITEM	PART NO.	DESCRIPTION
23	3485	BOTTOM RAIL 6063 T6 ALUM EXT.
22	1391	1/4"-20 X 5/8" RIBBED NECK SCREW
21	4044	1/4"-20 SERRATED FLANGE NUT
20		1 LB DENSITY FILLER BLOCK EPS
19		
18	4385	POP RIVET, 5/32" STEEL
17		HEX WASHERHEAD SCREW 1/4"-20 X 3/4"
16	1399LER	BOTTOM ROLLER BRACKET
15		HWH TEK SCREW 1/4-20 X 3/4 W/ #2 PT.
14	3875	TOP SUPPORT BRACKET
13	4043	5/16" X 1-5/8" LAG SCREW
12	4710	SIDE LOCK
11	4306	LONG STEM ROLLER 2"
10		ROLLER CARRIER (14 GA) OR HEAVIER
9		
8	4201	ROLLER CARRIER HINGE #1 (14 GA)
7		COUNTER BALANCE (TORSION BAR & SPRINGS)
6		HORIZONTAL TRACK & ANGLE (16 GA) OR HEAVIER
5		VERTICAL FLAG ANGLE
4		JAMB BRACKET (12 GA) OR HEAVIER
3		
2		VERTICAL TRACK (16 GA) OR HEAVIER
1		3" HEMMED STRUT(20 GA) MIN. YIELD STR. 80KSI

REV.	DATE	BY	DESCRIPTION

GADCO®
GENERAL AMERICAN DOOR COMPANY
5050 BASELINE ROAD
MONTGOMERY, IL 60538

SCALE NONE | APPROVED BY | DRAWN BY J. K. C.
DATE 6/9/04 | REVISED -
DESCRIPTION
16' X 7' MAX. RAISED PANEL STEEL DOOR -WINDLOAD

PAGE 2 OF 3 | J13220-2 DRAWING NUMBER

6/10/04

THE SEAL ON THIS DRAWING ONLY CERTIFIES THAT THE PRODUCT(S) ILLUSTRATED AND DESCRIBED HEREIN REPRESENT THE CONFIGURATION(S), DIMENSIONS AND INSTALLATION(S) OF THE DOOR AS TESTED.

	DOOR WIDTH					
	9'-0" & UNDER	10'-0"	12'-0"	14'-0"	16'-0"	18'-0"
1/4" X 3" ITW TAPCON CONCRETE ANCHORS, WITH 2-1/2" MIN EDGE DISTANCE & 1" OD WASHER						
IN CMU BLOCK, 1-1/4" EMBEDMENT	16.0	14.0	12.0	10.0	9.00	8.00
IN 2000 PSI CONCRETE, 1-1/2" EMBEDMENT	16.0	14.0	12.0	10.0	9.00	8.00
IN 4000 PSI CONCRETE, 1-1/2" EMBEDMENT	24.0	24.0	24.0	22.0	20.0	17.0
3/8" X 3" SIMPSON STRONG - TIE SLEEVE - ALL SLEEVE EXPANSION ANCHORS, WITH 3" MIN EDGE DISTANCE & WASHERS PROVIDED						
IN 2000 PSI CONCRETE, 1-1/2" EMBEDMENT	24.0	24.0	24.0	24.0	22.0	20.0
IN 4000 PSI CONCRETE, 1-1/2" EMBEDMENT	24.0	24.0	24.0	24.0	24.0	24.0
3/8" X 3-1/2" SIMPSON STRONG-TIE WEDGE-ALL WEDGE STAINLESS STEEL EXPANSION ANCHORS WITH 3" MIN EDGE DISTANCE & WASHERS PROVIDED						
IN 2000 PSI CONCRETE, 1-1/2" EMBEDMENT	24.0	24.0	24.0	24.0	24.0	24.0
IN 4000 PSI CONCRETE, 1-1/2" EMBEDMENT	24.0	24.0	24.0	24.0	24.0	24.0
7/16" X 8" L BOLTS, W/ 2" MIN SQUARE WASHERS	36.0	36.0	36.0	36.0	36.0	36.0
MIN 3 ANCHORS PER JAMB, MIN 4" EDGE DISTANCE						
3/8" X 3" LAG SCREW, WITH 1" OD WASHER	24.0	24.0	24.0	24.0	24.0	24.0
SOUTHERN YELLOW PINE, SPECIFIC GRAVITY = .55, WITH 1-1/2" MIN EDGE DISTANCE & 1-1/2" EMBEDMENT IN 3/16" PREDRILLED HOLES						

DOOR WIDTH / ANCHOR SPACING TABLE

REV.	DATE	BY	DESCRIPTION
-	-	-	-

2x6 JAMB TO SUPPORTING STRUCTURE ATTACHMENT

2x6 PRESSURE TREATED (GRADE #2 OR BETTER SOUTHERN PINE) WOOD JAMB SHALL BE ANCHORED TO BUILDING WOOD FRAME, GROUTED AND REINFORCED CONCRETE MASONRY UNIT (CMU) WALLS OR COLUMNS, OR REINFORCED CONCRETE COLUMNS.

NOTES:

1) ALL DOOR OPENING SURROUNDING STRUCTURE TO BE DESIGNED BY REGISTERED ENGINEER OR ARCHITECT TO RESIST APPLIED LOADS.

2) ALL DOOR OPENING STRUCTURE AND FASTENERS TO COMPLY WITH ALL APPLICABLE CODES INCLUDING SBCCI "STANDARD FOR HURRICANE RESISTANT RESIDENTIAL CONSTRUCTION: SSTD 10," CURRENT EDITION.

3) ALL FASTENERS TO BE INSTALLED IN STRICT ACCORDANCE WITH MANUFACTURER'S SPECIFICATIONS, INSTRUCTIONS AND RECOMMENDATIONS.

4) REINFORCED CMU OR CONCRETE: 2X6 WOOD JAMB SHALL BE ANCHORED TO SOLIDLY GROUTED AND REINFORCED CONCRETE MASONRY UNIT (CMU) WALLS OR COLUMNS, OR REINFORCED CONCRETE COLUMNS. ANCHOR SPACING AND EMBEDMENT IS BASED ON CONCRETE MASONRY UNITS COMPLYING WITH ASTM C90 WITH A MINIMUM NET AREA COMPRESSIVE STRENGTH OF 2150 PSI; GROUT WITH A MINIMUM COMPRESSIVE STRENGTH OF 2000 PSI; REINFORCED CONCRETE COLUMNS WITH A MINIMUM COMPRESSIVE STRENGTH OF 2500 PSI.

5) EMBEDMENTS LISTED ARE THE MINIMUM ALLOWABLE EMBEDMENTS.

6) WASHERS ARE REQUIRED ON ALL FASTENERS. SEE CHART FOR ACCEPTABLE WASHERS.

7) USE THE DOOR WIDTH / ANCHOR SPACING TABLE TO DETERMINE THE ANCHOR SPACING IN INCHES. ANCHOR SPACINGS ON THE TABLE ARE FOR USE WITH SPECIAL INSPECTION. REDUCE ANCHOR SPACING BY HALF FOR USE WITHOUT INSPECTION.

8) FOR THE UPPER THREE INDIVIDUAL STEEL JAMB BRACKETS, BRACKETS SHALL BE CENTERED BETWEEN THE TWO CLOSEST 2X6 WOOD JAMB ANCHORS. IF THE STEEL JAMB BRACKET IS NOT CENTERED BETWEEN THE TWO CLOSEST 2X6 WOOD JAMB ANCHORS, ADD AN ADDITIONAL 2X6 WOOD JAMB ANCHOR NEAR THAT STEEL BRACKET TO INSURE THAT THE LOAD FROM THE STEEL BRACKET IS EQUALLY TRANSFERRED TO TWO WOOD JAMB ANCHORS.

9) FOR CONCRETE COMPRESSIVE STRENGTH OF 2500 PSI USE ANCHOR SPACING FOR 2000 PSI CONCRETE.

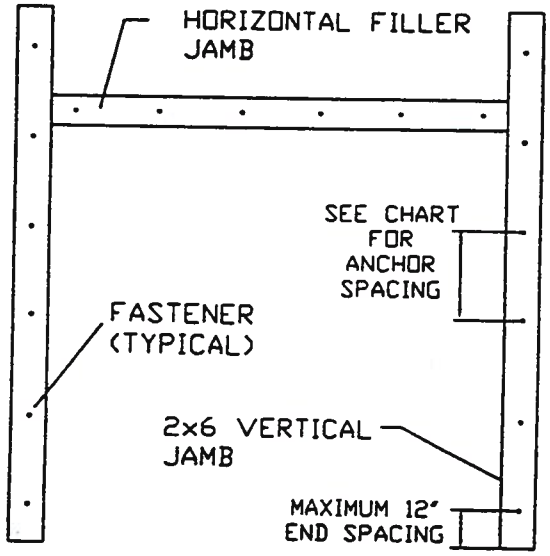

THE SEAL ON THIS DRAWING ONLY CERTIFIES THAT THE PRODUCT(S) ILLUSTRATED AND DESCRIBED HEREIN REPRESENT THE CONFIGURATION(S), DIMENSIONS AND INSTALLATION(S) OF THE DOOR AS TESTED.

GADCO®

GENERAL AMERICAN DOOR COMPANY
5050 BASELINE ROAD
MONTGOMERY, IL 60538

SCALE: NONE	APPROVED BY:	DRAWN BY: J. K. C.
DATE: 6/9/04		REVISED: -

DESCRIPTION:
16' X 7' MAX. RAISED PANEL STEEL DOOR -WINDLOAD

J13220-3
DRAWING NUMBER

[redacted]

1. PROJECT DATA

Project:	AAMA 450-00 Performance Test Series 3180 Fixed / 3950 Twin Single Hung
Dates of Testing:	October 23, 2003
Tested For:	Action Windoor Technologies 1312 Crosby Rd Carrollton, TX 75006

Witnessed By: (All or Partial Viewing)

Tony Rodriquez	Action Windoor Technologies
Jay Halsey	Action Windoor Technologies
Wesley A. Wilson	Construction Consulting Laboratory, *International*

[redacted]

2. INTRODUCTION

This report presents the performance results of Action Windoor Technologies Series 3180 PVC Fixed over Series 3950 PVC Twin Single Hung. Tests were conducted at Construction Consulting Laboratory, *International*, (CCLI) testing facility in Carrollton, TX.

3. SCOPE

CCLI was requested to report the testing results for an Action Windoor Technologies Series 3180 / 3950. Tests were conducted in accordance with AAMA 450-00 and ASTM E 330-02.

4. SUMMARY

Action Windoor Technologies Series 3180 / 3950 was tested in accordance AAMA 450-00 and ASTM E 330-02 and achieved a Design 50 rating.

5. TEST SPECIMEN

PRODUCT TYPE:	PVC Fixed over PVC Twin Single Hung, Photograph, Appendix B, and Product Drawings, Appendix A
SERIES/MODEL:	Action Series 3180 fixed and Series 3950 Hung
SPECIFICATION:	AAMA 405-00
OVERALL SIZE:	5'-11 ¾" X 8'-11 $^{15}/_{16}$"
FIXED SIZE:	5'-11 ¾" X 3'-0"
HUNG SIZE:	2'-11 $^{5}/_{8}$" x 5'-11 ½"
SASH SIZE:	2'-9 ¼" x 2'-5 $^{3}/_{16}$"
FRAME DIMENSION:	2.795"
CONFIGURATION:	

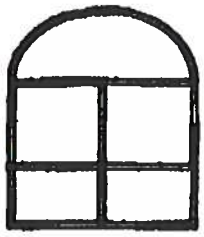

[redacted]

Refer to Mock-Up drawing in Appendix A. This report is not complete unless this drawing is stamped and initialed by CCLI as illustrated below.

CONSTRUCTION CONSULTING
LABORATORY, INTERNATIONAL
1601 Luna Road
Carrollton Texas 75006
Phone (972) 242-0556

03-261 GW 11-21-03

Weather-strip: One row pile weather-strip with integral plastic fin (0.300" thickness) at the exterior face sash top rail. One row pile weather-strip with integral plastic fin (0.250" thickness) at the exterior and lateral face sash stiles. One row bulb vinyl with foam walls (0.500") diameter at the exterior leg beneath sash bottom rail.

Hardware: Cam action locks, one (1), 7" on center from each end of sash top rail, attached with two (2), #8 x 1" self tapping screws with keeper grove at fixed interlock rail. One tilt latch and one steel pivot bar at top and bottom of sash stiles. One spiral type balance per jamb for sash operation.

Glass Fixed Lites: 5/8" overall thickness sealed insulating glass, two pieces DSB with 3/8" swiggle strip air spacer.

Sash Glass: 5/8" overall thickness sealed insulating glass, two pieces SSB with 7/16" swiggle strip metal air spacer.

Glazing: Exterior glazed with silicone sealant at interior of glass and rigid vinyl snap-in glazing bead at exterior of glass.

Fixed Window Weep Arrangement: ½" x ¼" weep slot spaced 5 ¾" from each end in the glazing pocket at frame sill with a 1" x 1/8" weep slot at the exterior of frame sill spaced 3 ¼" from each end.

Hung Weep Arrangement: 3/16" x 1/8" weep slot spaced 2 ¼" from each end in the glazing pocket punched through fixed interlock. 3/16" x 1/8" weep slot punched through sash bottom rail spaced 2 ½" from each end. Screen retaining legs and frame sill center leg notched ½" at each end

Reinforcement: T-shaped extruded aluminum reinforcement at sash members and L-shaped at fixed interlock. T-shaped extruded aluminum at vertical and horizontal mullion.

[redacted]

Installation: Test buck was constructed from nominal 2" x 6" and 2" x 4" at the perimeter with ½" OSB or strand board at the infil. Window opening is cut into the OSB and then framed with nominal 2" x 4" SPF. Window nail fin is attached through OSB into 2" x 4" with # 8 x 1 ½" wood screws spaced 2-3" from each end and on approximately 12" centers.

Other Features: Frame and sash corners are mitered and welded. Fixed interlock reinforcement attached to frame jambs with one (1) #8 x 2" wafer head screw and one (1) 7/8" dia flat washer per end.

Mullion Features: Mullion brackets (steel plate 2 ¼" x 3 ¼" x 0.050"t) are attached to each end of horizontal mullion and bottom of vertical mullion with two (2) # 8 x 1" wafer or pan head screws into mullion screw spline, Photograph 2, Appendix B. Mullion brackets are then attached into test buck with two (2) #8 x 1 ½" wood screws. Frame members are attached to extruded aluminum mullion with #8 x 1" screws spaced approximately 2-3" from each end and on 12" centers. Rigid vinyl mull cover is applied to the extruded aluminum mulls at interior and exterior face of mullion.

Date Tests Started: October 23, 2003
Date Tests Completed: October 23, 2003
Testing Performed at: Construction Consulting Laboratory, *International* in Carrollton, Texas

6. PERFORMANCE RESULTS

Title Of Test	Test Method	Measured	Allowed
Uniform Deflection @ Horizontal Mullion	ASTM E 330-02 (10 Second Duration)		
-Positive @ 50 PSF		.550"	.408"
-Permanent Set		.040"	.286"
-Negative @ 50 PSF		.595"	.408"
-Permanent Set		.080"	.286"
Uniform Deflection @ Vertical Mullion	ASTM E 330-02 (10 Second Duration)		
-Positive @ 50 PSF		.830"	.408"
-Permanent Set		.000"	.286"
-Negative @ 50 PSF		.890"	.408"
-Permanent Set		.050"	.286"

[redacted]

Uniform Structural	ASTM E 330-02 (10 Second Duration)	
-Positive	75.00 PSF	75.00 PSF
-Negative	75.00 PSF	75.00 PSF
-Permanent Set (Horizontal)	.110	0.286"
-Permanent Set (Vertical)	.065	0.336"

Detailed extrusion and assembly drawings indicating measured wall thickness and corner construction are on file and were compared to the test sample submitted. These records will be retained at CCLI for a period of four years.

7. CONCLUSION

The tests noted in Section 6 of this report were conducted in accordance with the structural requirements of AAMA 450-00 using ASTM E 330-02.

Respectfully submitted,
CONSTRUCTION CONSULTING LABORATORY, *INTERNATIONAL*

JUVENAL AZUA
TECHNICIAN

WESLEY A. WILSON
LABORATORY MANAGER

MIAMI-DADE

BUILDING CODE COMPLIANCE OFFICE (BCCO)
PRODUCT CONTROL DIVISION

MIAMI-DADE COUNTY, FLORIDA
METRO-DADE FLAGLER BUILDING
140 WEST FLAGLER STREET, SUITE 1603
MIAMI, FLORIDA 33130-1563
(305) 375-2901 FAX (305) 375-2908

NOTICE OF ACCEPTANCE (NOA)

Therma-Tru Corporation
1687 Woodlands Drive
Maumee. OH 43537

SCOPE:
This NOA is being issued under the applicable rules and regulations governing the use of construction materials. The documentation submitted has been reviewed by Miami-Dade County Product Control Division and accepted by the Board of Rules and Appeals (BORA) to be used in Miami Dade County and other areas where allowed by the Authority Having Jurisdiction (AHJ).

This NOA shall not be valid after the expiration date stated below. The Miami-Dade County Product Control Division (In Miami Dade County) and/or the AHJ (in areas other than Miami Dade County) reserve the right to have this product or material tested for quality assurance purposes. If this product or material fails to perform in the accepted manner, the manufacturer will incur the expense of such testing and the AHJ may immediately revoke, modify, or suspend the use of such product or material within their jurisdiction. BORA reserves the right to revoke this acceptance, if it is determined by Miami-Dade County Product Control Division that this product or material fails to meet the requirements of the applicable building code.
This product is approved as described herein, and has been designed to comply with the High Velocity Hurricane Zone of the Florida Building Code.

DESCRIPTION: Series "Benchmark" Glazed Inswing Residential Insulated Steel Doors w/Adjusta-Fit Steel Frame

APPROVAL DOCUMENT: Drawing No. S-2007, titled "Benchmark Glazed Inswing Steel Door w/Adjusta-Fit Steel Frame", sheets 1 through 5 of 5, prepared by the Rick Wright Building Consulting, Inc., dated 2/28/00 with revision on 3/28/00, bearing the Miami-Dade County Product Control Renewal stamp with the Notice of Acceptance number and expiration date by the Miami-Dade County Product Control Division.

MISSILE IMPACT RATING: None

LABELING: Each unit shall bear a permanent label with the manufacturer's name or logo, city, state and following statement: "Miami-Dade County Product Control Approved", unless otherwise noted herein.

RENEWAL of this NOA shall be considered after a renewal application has been filed and there has been no change in the applicable building code negatively affecting the performance of this product.

TERMINATION of this NOA will occur after the expiration date or if there has been a revision or change in the materials, use, and/or manufacture of the product or process. Misuse of this NOA as an endorsement of any product, for sales, advertising or any other purposes shall automatically terminate this NOA. Failure to comply with any section of this NOA shall be cause for termination and removal of NOA.

ADVERTISEMENT: The NOA number preceded by the words Miami-Dade County, Florida, and followed by the expiration date may be displayed in advertising literature. If any portion of the NOA is displayed, then it shall be done in its entirety.

INSPECTION: A copy of this entire NOA shall be provided to the user by the manufacturer or its distributors and shall be available for inspection at the job site at the request of the Building Official.
This NOA renews NOA # 99-1028.11 and, consists of this page 1 as well as approval document mentioned above.
The submitted documentation was reviewed by **Jaime Eisen, P.E.**

Therma-Tru Corporation

NOTICE OF ACCEPTANCE: EVIDENCE SUBMITTED
(For File ONLY. Not part of NOA)

A. DRAWINGS

1. Manufacturer's die drawings and sections.
2. Drawing No. **S-2007**, titled "Benchmark Inswing Glazed Steel Door w/Adjusta-Fit Steel Frame", sheets 1 through 5 of 5, prepared by the Rick Wright Building Consulting, Inc., dated 2/28/00 with revision on 3/28/00.

B. TESTS

Submitted under NOA#99-1028.11

1. Test reports on 1) Air Infiltration Test, per FBC, TAS 202-94
   2) Uniform Static Air Pressure Test, Loading per FBC,TAS 202-94
   3) Water Resistance Test, per FBC, TAS 202-94
   4) Large Missile Impact Test per FBC, TAS 201-94
   5) Cyclic Wind Pressure Loading per FBC, TAS 203-94
   6) Forced Entry Test, per FBC 2411 3.2.1 and TAS 202-94

   along with marked-up drawings and installation diagram of outswing and inswing steel edge opaque residential insulated steel pairs of doors, prepared by Certified Testing Laboratories, Test Report No. **CTLA-469W**, dated February 16, 2000, signed and sealed by Ramesh C. Patel, P.E.

C. CALCULATIONS

Submitted under NOA#99-1028.11

1. Anchor Calculations and structural analysis, dated November 1, 1999 prepared, signed and sealed by Mark Fetherman, P.E.

D. MATERIAL CERTIFICATIONS

Submitted under NOA#99-1028.11

1. Tensile Test prepared by Certified Testing Laboratories, Project No. **CTLA-469W**, dated October 26, 1999, for steel samples referenced DADE 990044, tested per ASTM E8/A370 or B557, signed and sealed by Ramesh C. Patel, P.E.
2. Test report # WHI-495-0920, issued to General Products Company, Inc. for "Two single swing 3' 0" x 7' 0" door and frame assemblies" ASTM E-152, dated August 28, 1988.

E. STATEMENTS

1. Statement letter of no change, prepared by R.W. Building Consultants, Inc., dated 12/22/02.

F. OTHER

1. Notice of Acceptance No. **99-1028.11**, General Products, Co., Inc., Benchmark" Inswing Glazed Residential Insulated Steel Doors w/Adjusta-Fit Steel Frame, approved on 4/21/00 and expiring on 4/21/03.

Jaime Eisen, P.E.
Product Control Examiner
NOA No 03-0109.04
Expiration Date: April 21, 2008
Approval Date: February 20, 2003

BENCHMARK

INSWING GLAZED STEEL DOOR W/ADJUSTA-STEEL FRAME

GENERAL NOTES

1. THIS PRODUCT IS DESIGNED TO MEET THE SOUTH FLORIDA BUILDING CODE 1994 EDITION FOR MIAMI-DADE COUNTY.
2. WOOD BUCKS BY OTHERS, MUST BE ANCHORED PROPERLY TO TRANSFER LOADS TO THE STRUCTURE.
3. PRODUCT ANCHORS SHALL BE AS LISTED AND SPACED AS SHOWN ON DETAILS. ANCHOR EMBEDMENT TO BASE MATERIAL SHALL BE BEYOND WALL DRESSING OR STUCCO.
4. IMPACT RESISTANT SHUTTERS ARE REQUIRED.
5. THIS SYSTEM WAS TESTED FOR 2.86 LBS. WATER PRESSURE AS PER ASTM-E331.
6. THIS SYSTEM DOES NOT MEET THE WATER REQUIREMENTS IN MIAMI-DADE COUNTY.

DOOR SYSTEM CONSTRUCTION:

DOOR PANEL

A. FACE SHEETS: 24 GA. (.025") MINIMUM THICKNESS, GALVANIZED STEEL A-525 COMMERCIAL QUALITY - AKOQ PER ASTM 820 WITH YIELD STRENGTH FY (MIN.) = 27,000psi

B. CORE DESIGN: POLYURETHANE FOAM (CARPENTER CHEMICAL WITH 2.15 LBS. DENSITY) CORE LAMINATED TO INSIDE FACES.

C. CONSTRUCTION: THE VERTICAL STYLES ARE EXTENSIONS OF THE SKIN, ROLL FORMED TO A MECHANICAL INTERLOCK, HORIZONTAL EDGES ARE WELDED TOGETHER AT TWO PLACES EACH

D. THE GLAZING OPENINGS ARE STAMPED PRECISION EDGES TO RECEIVE INTEGRAL GLASS STOPS.

STEEL FRAME

A. BASE FRAME MATERIAL: 16GA. (.054" MIN. THK.)

B. CLOSURE FRAME MATERIAL: 20GA. (.033" MIN. THK.)

C. THE FRAMES ARE ROLL FORMED AND PRESS BROKE WITH TABS AND SLOTS ON THE HEADERS TO FORM A LOCK.

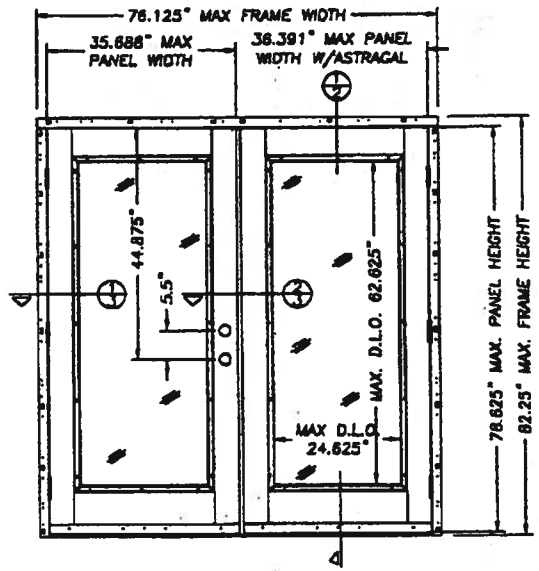

DOUBLE GLAZED DOOR ELEVATION VIEWED FROM INTERIOR SIDE

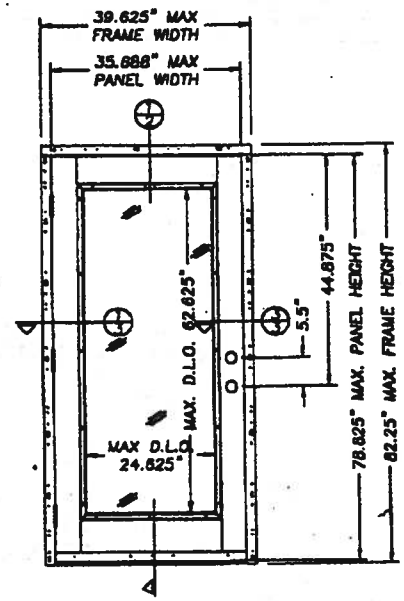

SINGLE GLAZED DOOR ELEVATION VIEWED FROM INTERIOR SIDE

TABLE OF CONTENTS	
SHEET #	DESCRIPTION
1	GENERAL NOTES AND ELEVATIONS
2	VERTICAL CROSS SECTIONS
3	HORIZONTAL CROSS SECTIONS & GLAZING DETAILS
4	ANCHOR LAYOUTS & DOOR MODELS
5	FRAME COMPONENTS & BILL OF MATERIAL

DESIGN PRESSURE RATING	
	WHERE WATER INFILTRATION REQUIREMENT IS NOT NEEDED
POSITIVE	+ 60.0 PSF
NEGATIVE	- 60.0 PSF

PRODUCT RENEWED as complying with the Florida Building Code
Acceptance No. 03-0109.04
Expiration Date 03/21/08
By UMW
Miami Dade Product Control Division

APPROVED AS COMPLYING WITH THE SOUTH FLORIDA BUILDING CODE
DATE April 21 2000
BY Manuel Perez
PRODUCT CONTROL DIVISION
BUILDING CODE COMPLIANCE OFFICE
ACCEPTANCE NO. 99-1028.11

GENERAL PRODUCTS CO. INC.
P.O. BOX 7387
FREDERICKSBURG, VA 22404
PH. (540) 898-5700

PRODUCT: BENCHMARK GLAZED INSWING STEEL DOOR W/ ADJUSTA-STEEL FRAME
PART OR ASSEMBLY: ELEVATIONS & GENERAL NOTES

NO.	DATE	REVISIONS	BY
1	3/28/00	GENERAL	TJH

RW BUILDING CONSULTANTS, INC.
813.884.3831

DATE: 2/28/00
SCALE: N.T.S.
DWG. BY: TJH
CHK. BY: RW
DRAWING NO.: S-2007
SHEET 1 OF 5

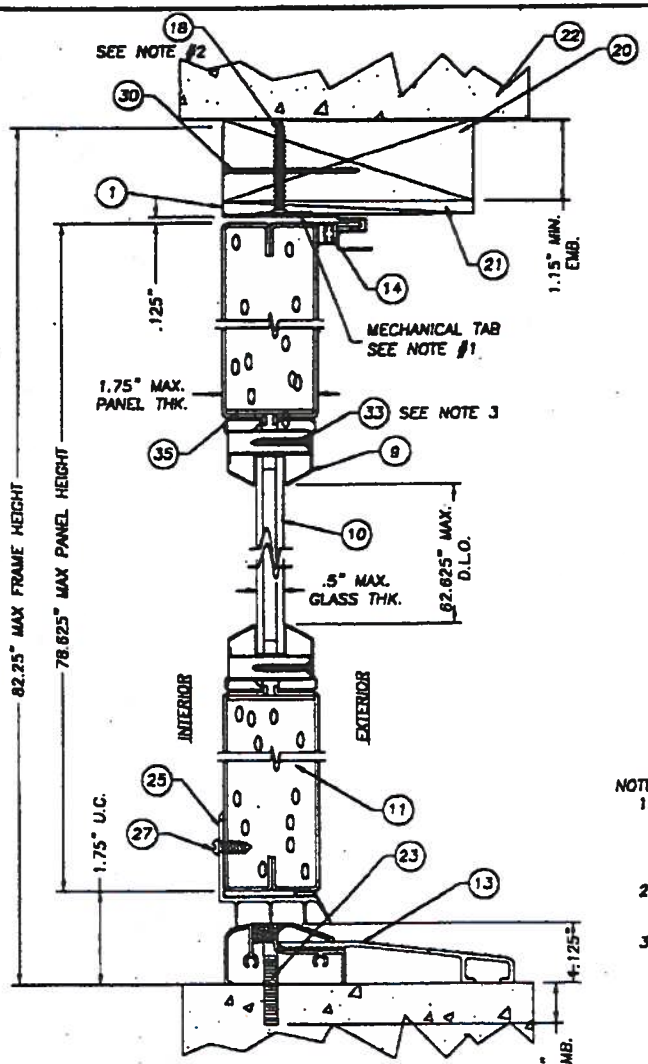

VERTICAL CROSS SECTION
GLAZED DOOR
2PIECE ALUM THRESHOLD

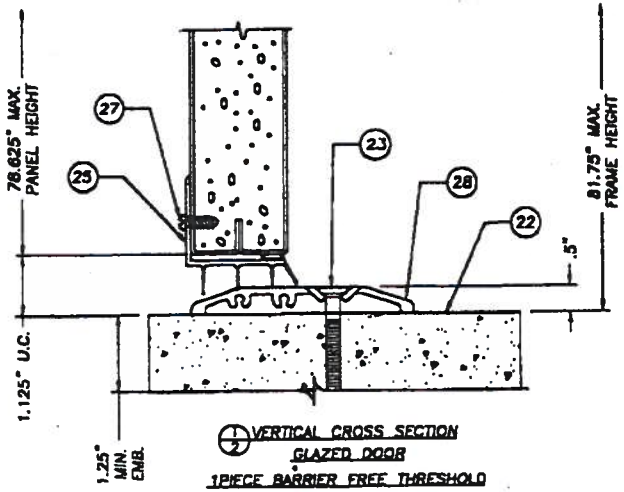

VERTICAL CROSS SECTION
GLAZED DOOR
1PIECE BARRIER FREE THRESHOLD
(SEE GENERAL NOTES NO. 5 & 6 SHEET 1)

NOTES:

1. THE TABS FROM THE SIDE JAMBS ARE INSERTED INTO THE SLOTS OF THE BASE HEADER AND BENT OVER TO FORM A MECHANICAL LOCK.
2. OMIT ITEM #18 AT THE HEADER WHEN INSTALLING A SINGLE DOOR UNIT.
3. (16) SCREWS TOTAL SPACING AS FOLLOWS: TOP & BOTTOM, 3" IN FROM EACH CORNER AND (1) IN THE CENTER OF FRAME. SIDES, FROM TOP DOWN 3" THEN (4) MORE AT 14.78125" ON CENTER.

PRODUCT RENEWED as complying with the Florida Building Code
Acceptance No. 09-0109.04
Expiration Date 08/21/08
By
Name: Date:
Division:

APPROVED AS COMPLYING WITH THE SOUTH FLORIDA BUILDING CODE
DATE April 21, 2000
BY
PRODUCT CONTROL DIVISION
BUILDING CODE COMPLIANCE OFFICE
ACCEPTANCE NO. 99-1028.11

GENERAL PRODUCTS CO. INC.
P.O. BOX 7387
FREDERICKSBURG, VA 22404
PH. (540) 898-5700

PRODUCT: BENCHMARK GLAZED INSWING STEEL DOOR W/ ARVISTA-STEEL FRAME
PART OR ASSEMBLY: VERTICAL CROSS SECTIONS

NO.	DATE	REVISIONS	BY
1	3/28/00	GENERAL	TJH

RW BUILDING CONSULTANTS, INC.
813.684.3831

DATE: 2/28/00
SCALE: N.T.S.
DWG. BY: TJH
CHK. BY: RW
DRAWING NO.: S-2007
SHEET 2 OF 5

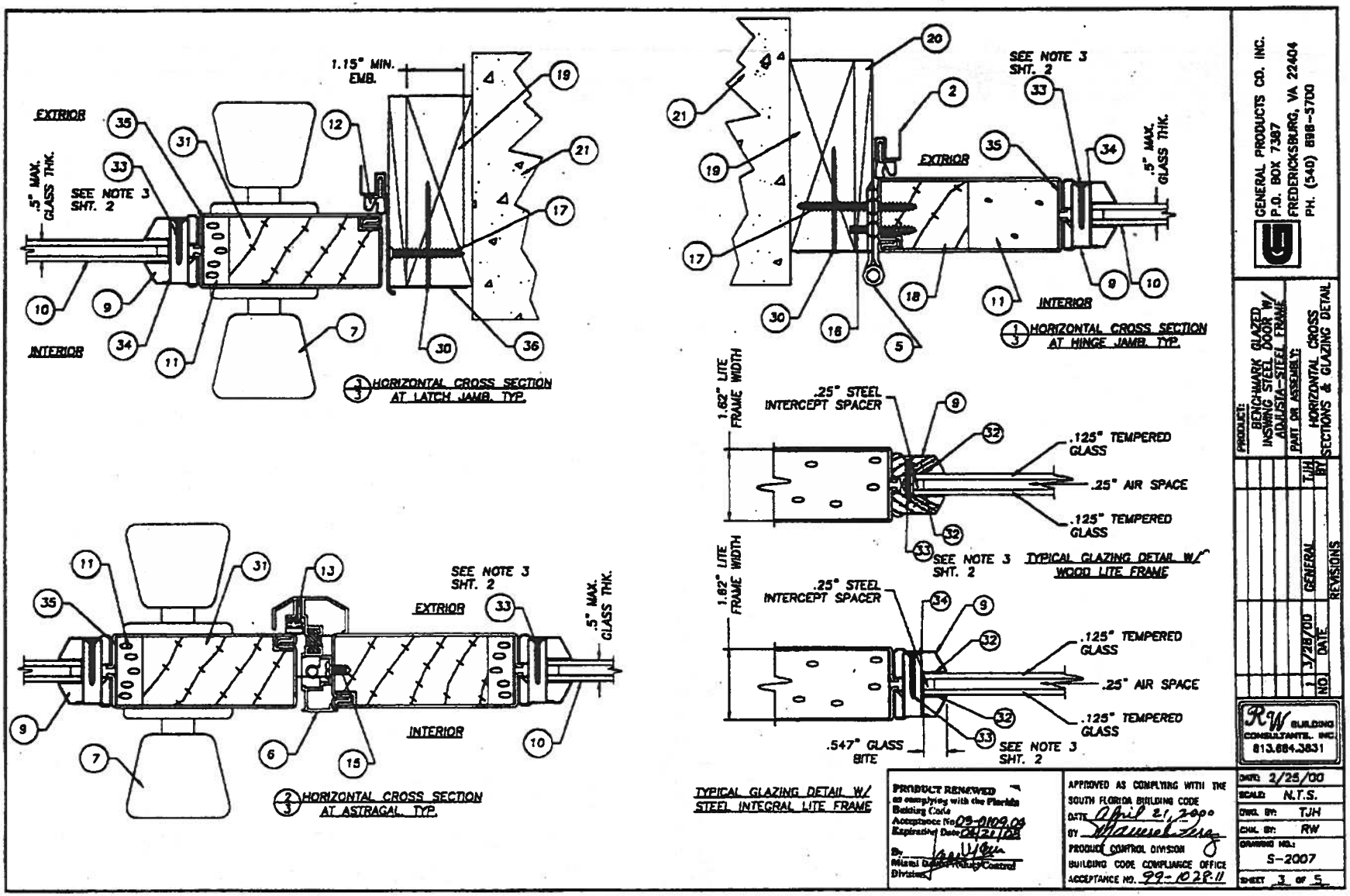
EXTRIOR
INTERIOR
.5" MAX. GLASS THK.
SEE NOTE 3 SHT. 2
1.15" MIN. EMB.
1/3 HORIZONTAL CROSS SECTION AT LATCH JAMB. TYP.
1/3 HORIZONTAL CROSS SECTION AT HINGE JAMB. TYP.
2/3 HORIZONTAL CROSS SECTION AT ASTRAGAL. TYP.
1.62" LITE FRAME WIDTH
.25" STEEL INTERCEPT SPACER
.125" TEMPERED GLASS
.25" AIR SPACE
TYPICAL GLAZING DETAIL W/ WOOD LITE FRAME
.547" GLASS BITE
TYPICAL GLAZING DETAIL W/ STEEL INTEGRAL LITE FRAME
PRODUCT RENEWED as complying with the Florida Building Code
Acceptance No. 03-0109.04
Expiration Date 04/21/05
Miami Dade County Product Control Division
APPROVED AS COMPLYING WITH THE SOUTH FLORIDA BUILDING CODE
DATE April 21, 2000
PRODUCT CONTROL DIVISION
BUILDING CODE COMPLIANCE OFFICE
ACCEPTANCE NO. 99-1028.11
GENERAL PRODUCTS CO. INC.
P.O. BOX 7387
FREDERICKSBURG, VA 22404
PH. (540) 898-5700
PRODUCT: BENCHMARK GLAZED INSWING STEEL DOOR W/ AMISTA-STEEL FRAME
PART OR ASSEMBLY: HORIZONTAL CROSS SECTIONS & GLAZING DETAIL
BY TJH
GENERAL
REVISIONS
1 3/28/00
NO. DATE
RW BUILDING CONSULTANTS, INC. 813.684.3831
DATE: 2/25/00
SCALE: N.T.S.
DWG. BY: TJH
CHK. BY: RW
DRAWING NO.: S-2007
SHEET 3 OF 5

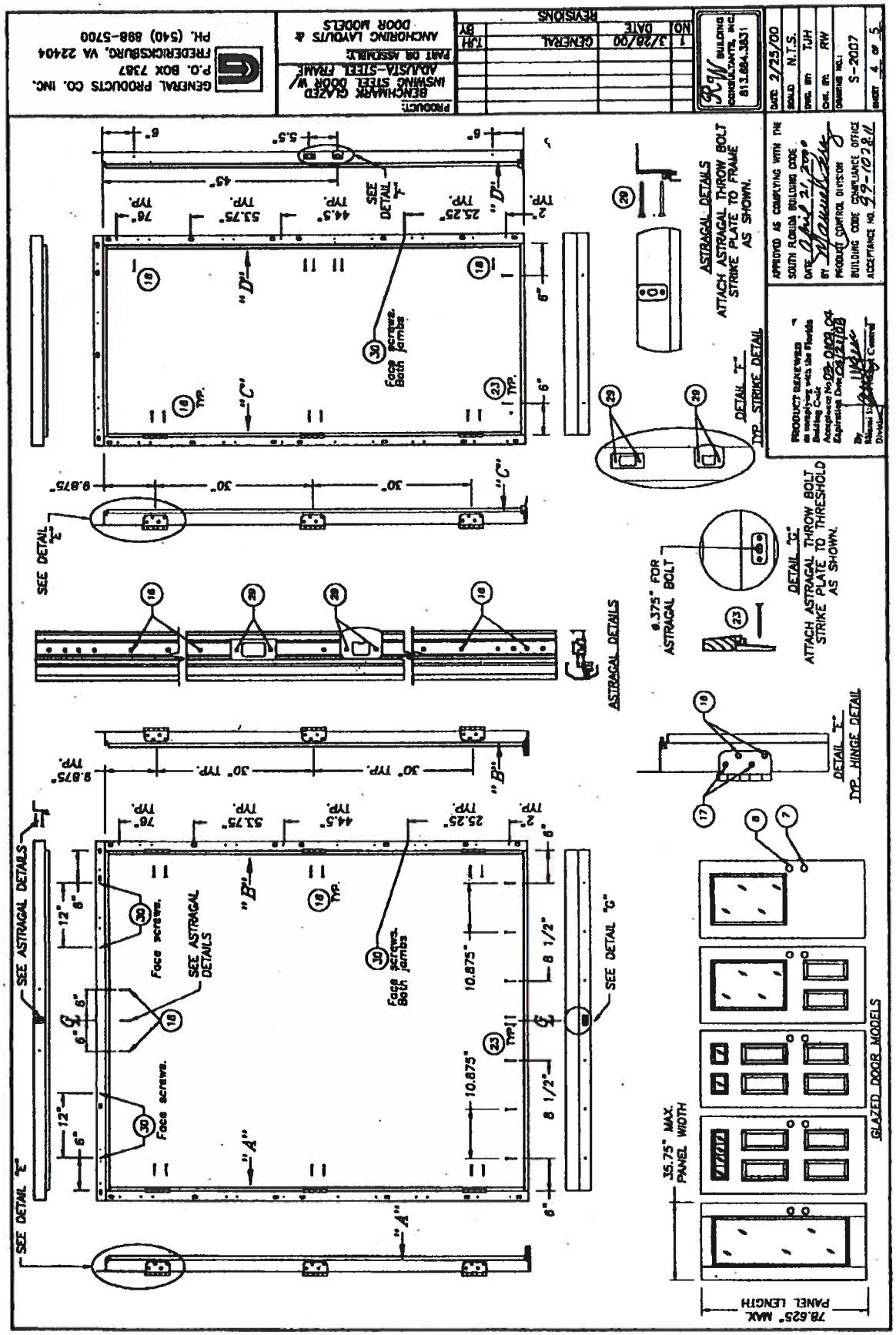
GENERAL PRODUCTS CO. INC.
P.O. BOX 7387
FREDERICKSBURG, VA 22404
PH. (540) 898-5700
PRODUCT:
BENCHMARK GLAZED INSWING STEEL DOOR W/ ADJUSTA-STEEL FRAME
PART OR ASSEMBLY:
ANCHORING LAYOUTS & DOOR MODELS
REVISIONS
NO DATE GENERAL BY
1 3/28/00 TJH
BUILDING CONSULTANTS, INC. 813.884.3831
DATE 2/25/00
SCALE N.T.S.
DWG. BY TJH
CHK. BY RW
DRAWING NO. S-2007
SHEET 4 OF 5
APPROVED AS COMPLYING WITH THE SOUTH FLORIDA BUILDING CODE
DATE
BY
PRODUCT CONTROL DIVISION
BUILDING CODE COMPLIANCE OFFICE
ACCEPTANCE NO. 99-1012.11
PRODUCT REVIEWED as complying with the Florida Building Code
Acceptance No.
Expiration Date
By
Division
SEE DETAIL "E"
SEE DETAIL "F"
SEE DETAIL "G"
SEE ASTRAGAL DETAILS
SEE ASTRAGAL DETAILS
Face screws.
Face screws. Both jambs
ASTRAGAL DETAILS
ATTACH ASTRAGAL THROW BOLT STRIKE PLATE TO FRAME AS SHOWN.
DETAIL "F"
TYP. STRIKE DETAIL
DETAIL "G"
ATTACH ASTRAGAL THROW BOLT STRIKE PLATE TO THRESHOLD AS SHOWN.
0.375" FOR ASTRAGAL BOLT
DETAIL "E"
TYP. HINGE DETAIL
35.75" MAX. PANEL WIDTH
78.625" MAX. PANEL LENGTH
GLAZED DOOR MODELS

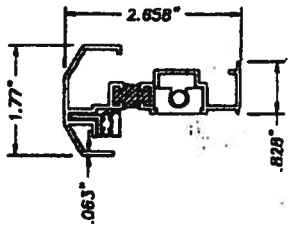

TEE ASTRAGAL

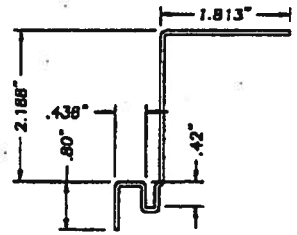

ADJUSTA-STEEL BASE FRAME W/FLAT FACE 16GA. (.054" MIN.)

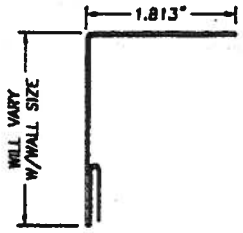

ADJUSTA-STEEL CLOSURE FRAME W/FLAT FACE 20GA. (.033" MIN.)

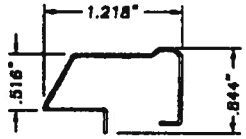

INTEGRAL STEEL LITE FRAME 24GA. (.023" MIN.)

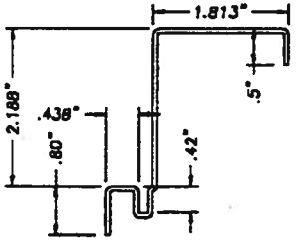

ADJUSTA-STEEL BASE FRAME W/1/2" RETURN LEG 16GA. (.054" MIN.)

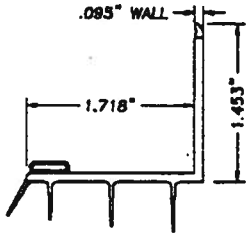

VINYL ADJUSTABLE SWEEP

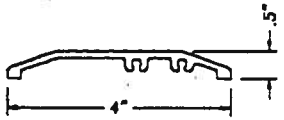

BARRIER FREE THRESHOLD

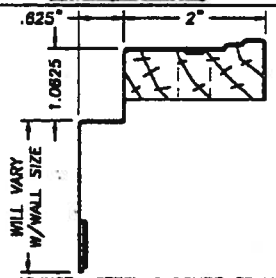

ADJUSTA-STEEL CLOSURE FRAME W/FORMED BRICK MOLD 20GA. (.033" MIN.)

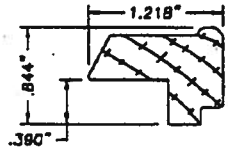

WOOD LITE FRAME (PRIMED PINE OR UNPRIMED POPLAR)

ITEM	DESCRIPTION	MATERIAL
1	STEEL BASE HEADER (16GA. .054" MIN.)	STEEL
2	STEEL HINGE JAMB (16GA. .054" MIN.)	STEEL
3	STEEL CLOSURE HEADER (20GA. .033" MIN.)	STEEL
4	STEEL CLOSURE JAMB (20GA. .033" MIN.)	STEEL
5	BENCHMARK 4" x 4" HINGE PROPRIETARY .097" THK.	STEEL
6	T-ASTRAGAL (.063" WALL THK.)	ALUMINUM
7	KWIKSET 200 DL PASSAGE	-
8	KWIKSET 660 DEADBOLT	-
9	STEEL INTEGRAL LITE FRAME OR WOOD LITE FRAME (PINE OR POPLAR)	STEEL WOOD
10	GLAZING, 1/2" INSULATED GLASS	-
11	POLYURETHANE FOAM CARPENTER CHEM. 2.15 lbs DENSITY	-
12	COMPRESSION WEATHER STRIPPING	FOAM
13	2PIECE ALL ALUMINUM INSWING THRESHOLD	ALUMINUM
14	MAGNETIC WEATHER STRIPPING	VINYL
15	COMPRESSION WEATHER STRIPPING O-LON QDS 650	FOAM
16	#12 x 1/2" L. SCREW (ASTRAGAL TO DOOR)	STEEL
17	10-24 x 3/8" PHILLIPS FLATHEAD SCREW	STEEL
18	#10 x 1 3/4" L. PHILLIPS FLATHEAD SCREW	STEEL
19	WOOD HINGE REIN. 1 11/16" SQ. x 5 7/8" L.	WOOD
20	2X WOOD (BUCK)	WOOD
21	1/4" MAX. SHIM SPACER	-
22	MASONRY WALL	-
23	3/16" TAPCON ANCHOR (ELCO)	STEEL
24	#10 x 5/8" SCREW (HINGE TO DOOR)	STEEL
25	ADJUSTABLE SWEEP	VINYL
26	#10 x 1" WOOD SCREW (WOOD HINGE REIN.)	STEEL
27	#8 x 1/2" TYPE "AB" PANHEAD SCREW (SWEEP)	STEEL
28	1PIECE BARRIER FREE THRESHOLD	ALUMINUM
29	#8 x 2 1/2" L. PHILLIPS FLATHEAD SCREW	STEEL
30	#6 x 2 1/2" L. PHILLIPS FLATHEAD SCREW	STEEL
31	SOLID LATCH WOOD BLOCK 3 1/2" x 1 11/16" x 48" LG.	WOOD
32	CAULK SCHNEE MOREHEAD S-M 8500	SILICONE
33	#6 x 1 1/2" L. PHILLIPS FLATHEAD SCREW	STEEL
34	INTEGRAL STEEL LITE FRAME RETAINER CLIP	STEEL
35	FOAM STOP	CARDBOARD
36	STEEL LATCH JAMB (16GA. .054" MIN.)	STEEL

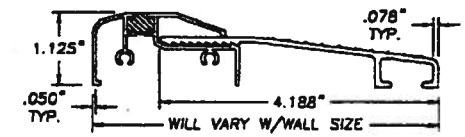

2PIECE INSWING ALL ALUMINUM THRESHOLD

PRODUCT RENEWED
Is complying with the Florida Building Code
Acceptance No. 03-0109.04
Expiration Date 08/28/08
By Miami Dade Product Control Division

APPROVED AS COMPLYING WITH THE SOUTH FLORIDA BUILDING CODE
DATE April 21, 2000
BY Samuel Shea
PRODUCT CONTROL DIVISION
BUILDING CODE COMPLIANCE OFFICE
ACCEPTANCE NO. 99-1028.11

GENERAL PRODUCTS CO. INC.
P.O. BOX 7387
FREDERICKSBURG, VA. 22404
PH. (540) 898-5700

PRODUCT: BENCHMARK GLAZED INSWING STEEL DOOR W/ ADJUSTA-STEEL FRAME
PART OR ASSEMBLY: FRAME COMPONENTS & BILL OF MATERIALS

NO.	DATE	REVISIONS	BY
1	3/28/00	GENERAL	TJH

RW BUILDING CONSULTANTS, INC.
813.684.3831

DATED 2/28/00
SCALE N.T.S.
DWG. BY: TJH
CHK. BY: RW
DRAWING NO.: S-2007
SHEET 5 OF 5