Scott E. Wyssling, PE
Jon P. Ward, SE, PE
Gregory T. Elvestad, PE

76 North Meadowbrook Drive
Alpine, UT 84004
office (201) 874-3483
swyssling@wysslingconsulting.com

May 31, 2022

Ken Trappen
Advanced Solar Solutions
2372 Morse Avenue #912
Irvine, CA 92614

Scott Wyssling, PE

Digitally signed by Scott Wyssling, PE
DN: C=US, S=Utah, L=Alpine, O=Wyssling Consulting, OU=Owner, CN="Scott Wyssling, PE", E=swyssling@wysslingconsulting.com
Reason: I am the author of this document
Location: your signing location here
Date: 2022.06.01 00:01:14-06'00'
Foxit PDF Editor Version: 11.1.0

Re: Engineering Services
Larson Residence
2018 Southwest Fallon Lane, Lake City, FL
3.300 kW System

To Whom It May Concern:

We have received information regarding solar panel installation on the roof of the above referenced structure. Our evaluation of the structure is to verify the existing capacity of the roof system and its ability to support the additional loads imposed by the proposed solar system.

A. Site Assessment Information

1. Site visit documentation identifying attic information including size and spacing of framing for the existing roof structure.
2. Design drawings of the proposed system including a site plan, roof plan and connection details for the solar panels. This information will be utilized for approval and construction of the proposed system.

B. Description of Structure:

Roof Framing: Prefabricated wood trusses at 24" on center. All truss members are constructed of 2x4 dimensional lumber.
Roof Material: Metal Roofing
Roof Slope: 20 degrees
Attic Access: Accessible
Foundation: Permanent

C. Loading Criteria Used

- **Dead Load**
  - Existing Roofing and framing = 7 psf
  - New Solar Panels and Racking = 3 psf
  - TOTAL = 10 PSF
- **Live Load** = 20 psf (reducible) – 0 psf at locations of solar panels
- **Ground Snow Load** = 0 psf
- **Wind Load** based on ASCE 7-16
  - Ultimate Wind Speed = 118 mph (based on Risk Category II)
  - Exposure Category C

Analysis performed of the existing roof structure utilizing the above loading criteria is in accordance with the FBC 2020, 7th Edition, including provisions allowing existing structures to not require strengthening if the new loads do not exceed existing design loads by 105% for gravity elements and 110% for seismic elements. This analysis indicates that the existing framing will support the additional panel loading without damage, if installed correctly.

D. Solar Panel Anchorage

1. The solar panels shall be mounted in accordance with the most recent S-5! installation manual. If during solar panel installation, the roof framing members appear unstable or deflect non-uniformly, our office should be notified before proceeding with the installation.
2. System will be attached to the metal roofing material utilizing the patented S-5! Connection. Installation of the connections shall be in accordance with the manufacturer's recommendations.
3. Considering the wind speed, roof slopes, size and spacing of framing members, and condition of the roof, the panel supports shall be placed no greater than 72" on center.
4. Panel supports connections shall be staggered to distribute load to adjacent framing members.

Based on the above evaluation, this office certifies that with the racking and mounting specified, the existing roof system will adequately support the additional loading imposed by the solar system. This evaluation is in conformance with the FBC 2020, 7th Edition, current industry standards, and is based on information supplied to us at the time of this report.

Should you have any questions regarding the above or if you require further information do not hesitate to contact me.

Very truly yours,

Scott E. Wyssling, PE
Florida License No. 81558

SCOTT E WYSSLING
LICENSE
No. 81558
STATE OF
FLORIDA
PROFESSIONAL ENGINEER

Wyssling Consulting, PLLC
76 N Meadowbrook Drive Alpine UT 84004
Florida License # RY34912

THIS PLAN HAS BEEN ELECTRONICALLY SIGNED AND SEALED BY SCOTT WYSSLING, PE USING A DIGITAL SIGNATURE AND DATE. PRINTED COPIES OF THIS DOCUMENT ARE NOT CONSIDERED SIGNED AND SEALED AND THE SIGNATURE MUST BE VERIFIED ON ANY ELECTRONIC COPIES

PARCEL MAP

GPS COORDINATES (30.172028,-82.66613)

SW FALLON LN

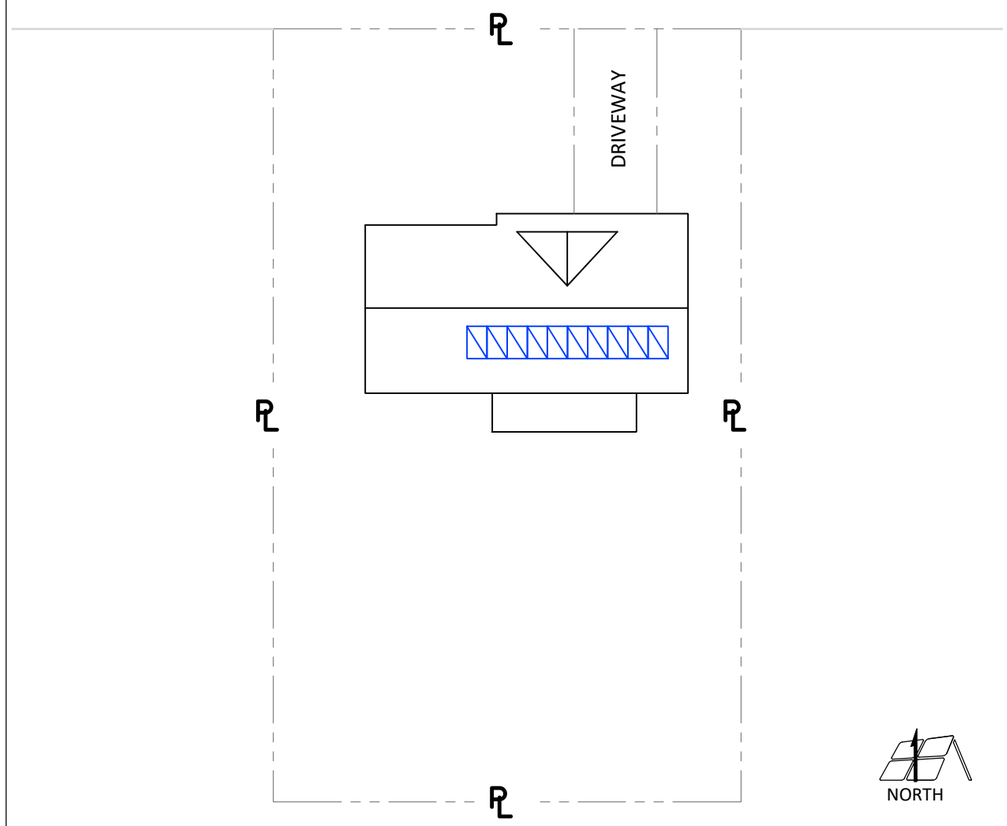

PROJECT APN:

GENERAL PROJECT & JURISDICTIONAL NOTES

INSPECTION REQUIREMENTS

1. A LADDER SHALL BE IN PLACE FOR INSPECTION IN COMPLIANCE WITH ALL OSHA REGULATIONS.

2. PENDING LOCAL JURISDICTIONAL REQUIREMENTS AND WHEN APPLICABLE ALL ELECTRICAL ENCLOSURE DEAD FRONTS, COVERS, DOORS, ETC. SHALE BE OPEN AND ACCESSIBLE FOR INSPECTIONS. WHEN TRENCH AND ROOF INSPECTIONS ARE REQUIRED WORK SHALL BE OPEN AND ACCESSIBLE FOR INSPECTOR.

JURISDICTIONAL & LISTING REQUIREMENTS

1. WHEN APPLICABLE A SMOKE DETECTOR, APPROVED AND LISTED BY THE STATE FIRE MARSHAL OR ANSI/UL 217 CERTIFIED TO NATIONAL FIRE ALARM AND SIGNALING CODE, NFPA 72 SHALL BE VERIFIED FUNCTIONAL OR INSTALLED IN ALL APPLICABLE CODE REQUIRED LOCATIONS.

2. ALL APPLICABLE EQUIPMENT TO BE UL LISTED OR LISTED BY OTHER JURISDICTIONAL AND UTILITY APPROVED ASSOCIATION OR NATIONALLY RECOGNIZED ORGANIZATION.

3. FULL SCOPE OF WORK SHALL COMPLY WITH ALL APPLICABLE CODES LISTED IN GOVERNING CODES SECTION, ALL MANUFACTURES' LISTINGS, INSTALLATION INSTRUCTIONS AND SPECIFICATIONS AND JURISDICTIONAL REQIREMENTS.

4. REVISED PLANS WILL BE REQUIRED TO BE RESUBMITTED TO THE LOCAL JURISDICTION IF THE INSTALLED ARRAY AND ASSOCIATED EQUIPMENT DOES NOT MATCH THE APPROVED BUILDING PLANS. ADDITIONAL FEES MAY ALSO APPLY.

5. THE PLACEMENT OF A UTILITY PV PRODUCTION METER SHALL BE PROVIDED AND PLACED BY THE CONTRACTOR AS PER APPLICABLE UTILITY OR AHJ REQUIREMENTS.

COPYRIGHT NOTICE

1. UNAUTHORIZED USE OF THIS DRAWING SET WITHOUT EXPRESSED WRITTEN PERMISSION FROM THE CONTRACTOR AND ADVANCED SOLAR SOLUTIONS IS A VIOLATION OF U.S. COPYRIGHT LAWS AND WILL BE SUBJECT TO CIVIL DAMAGES AND PROSECUTION.

GOVERNING CODES

APPLICABLE BUILDING CODES:

2018 INTERNATIONAL BUILDING CODE
2018 INTERNATIONAL RESIDENTIAL CODE
2018 INTERNATIONAL FIRE CODE
2017 NATIONAL ELECTRIC CODE
2020 FLORIDA BUILDING CODE
2020 FLORIDA RESIDENTIAL CODE

DESIGN CRITERIA

BUILDING OCCUPANCY: R-3
RISK CATEGORY: II
ASCE 7-16 WIND SPEED: 118
EXPOSURE CATEGORY: Exposure C
SNOW LOAD: 0
SNOW EXPOSURE: N/A
CONSTRUCTION TYPE: IIIA

SCOPE OF WORK

ROOF MOUNTED PV (SOLAR) PROJECT GRID-TIED W/O BATTERY STORAGE

PROPOSED SOLAR EQUIPMENT

QTY.	EQUIPMENT	DESCRIPTION/MFG/MODEL
10	MODULES	PEIMAR SM330M (BF)
1	INVERTER(S)	SolarEdge SE3000H-US (240V)
N/A	MOUNTING	IronRidge XR100 Rail
14	STANCHIONS	S-5! ProteaBracket
N/A	RSD DEVICE	INTEGRATED IN INV & OPT
N/A	BATTERIES	N/A
N/A	COMBINER(S)	N/A
(E)	MSP RATINGS	200A BUS/200A MAIN BREAKER

SITE / PROJECT DETAILS

CONNECTION	WIRE TAP
SYSTEM SIZE DC	3.300 KW
SYSTEM SIZE AC	3.000 KW
QTY. STRING/CKT.	1
ELECT. SERVICE	120/240V - 1Φ
ROOF COVERING	Trapezoidal Metal
TILT	20°
AZIMUTH	180°

PROJECT TEAM LIST

CONTRACTOR:
Daybreak Install LLC
2100 N Main St Ste. 212
Fort Worth, TX 76164
CONTRACTOR LIC #: CVC56966
PHONE: (817) 995-9572
CONTACT NAME: Sherrie Ledbetter
PHONE: (817) 501-4922
EMAIL: sherrie.ledbetter@daybreakinstall.com

DESIGN BY:
Sherrie Ledbetter
PHONE: (817) 501-4922
EMAIL: sherrie.ledbetter@daybreakinstall.com

PROJECT DRAFTER:
Advanced Solar Solutions
2372 Morse Ave #912
Irvine, CA 92614

ADVANCED SOLAR SOLUTIONS
THE FASTEST SUBMISSIONS & TURNAROUND TIME

PHONE: 559-321-7000
EMAIL: info@advpermits.com

HOME OWNER PROJECT LOCATION:
Larson, Carrie
2018 SW Fallon Ln, Lake City, FL 32025

CONTACT NAME: Larson, Carrie
PHONE:
EMAIL:

ELECTRICAL UTILITY:
FPL - Florida Power & Light
METER NUMBER: 207 601 021

PHONE:

AUTHORITY HAVING JURISDICTION:
BUILDING: City of Lake City
PHONE:

ENGINEERED BY:
Scott E. Wyssling
76 North Meadowbrook Dr
Alpine, UT 84004
LICENSE #: 81558
LICENSE TYPE: Civil
PHONE: (202) 874-3483
EMAIL: swyssling@wysslingconsulting.com

THIS PLAN HAS BEEN ELECTRONICALLY SIGNED AND SEALED BY SCOTT WYSSLING, PE USING A DIGITAL SIGNATURE AND DATE. PRINTED COPIES OF THIS DOCUMENT ARE NOT CONSIDERED SIGNED AND SEALED AND THE SIGNATURE MUST BE VERIFIED ON ANY ELECTRONIC COPIES

Columbia County Building Department
Plans Reviewed for Code Compliance
State of Florida

SCOTT E WYSSLING
LICENSE
No. 81558
STATE OF FLORIDA
PROFESSIONAL ENGINEER

Wyssling Consulting, PLLC
76 N Meadowbrook Drive Alpine UT 84004
Florida License # RY34912
Signed 5/31/2022

PROJECT LOCATION

SHEET INDEX

SHEET NUMBER	SHEET TITLE
PV-001	COVER SHEET
N-001	GENERAL NOTES
PV-100R	PV ARRAY LAYOUT
S-100	RACKING LAYOUT
S-200	SECTION ELEVATION
S-201	ATTACHMENT DETAILS
E-001	EQUIP. CALCULATION
E-002	WIRE AND COND. CALCS
E-003	THREE LINE DIAGRAM
E-100	ELECTRICAL LAYOUT
P-001	STANDARD PLACARDS
P-002	DYNAMIC PLACARDS
R-1xx	EQUIP.CUT SHEETS

REV	DATE	RELEASE
	05/31/2022	SUBMIT FOR PERMIT

COVER SHEET

PV-001

3.300 kW PHOTOVOLTAIC PLANS

NAME	Larson, Carrie
ADDRESS	2018 SW Fallon Ln
ADDRESS	Lake City, FL 32025
APN	

Daybreak Install LLC
CVC56966
2100 N Main St Ste. 212
Fort Worth, TX 76164
(817) 501-4922

GENERAL NOTES:*

PROPER ACCESS AND WORKING CLEARANCE AROUND EXISTING AND PROPOSED ELECTRICAL EQUIPMENT WILL BE PROVIDED AS PER SECTION *NEC 110.26.*

PV SYSTEM COMPONENTS; INCLUDING BUT NOT LIMITED TO, MODULES, INVERTERS AND SOURCE CIRCUIT COMBINERS ARE IDENTIFIED AND LISTED FOR USE IN PV SYSTEMS IN COMPLIANCE WITH *NEC 690.4 AND 690.6* AND *ALL UL, IEC, IEEE* CLASSIFICATIONS AS REQUIREMENTS.

RAPID SHUTDOWN NOTES:*

PV SYSTEM CIRCUITS INSTALLED ON OR IN BUILDIDNG SHALL INCLUDE A **RAPID SHUTDOWN FUNCTION** THAT CONTROLS SPECIFIC PV CONDUCTORS IN ACCORDANCE WITH *2017 NEC 690.12(A)-(D)*

EQUIPMENT LOCATIONS & ELECTRICAL NOTES:*

JUNCTION AND PULL BOXES ARE PERMITTED TO BE INSTALLED UNDER PV MODULES IN COMPLIANCE WITH *NEC 690.34*.

ADDITIONAL AC DISCONNECT(S) SHALL BE PROVIDED WHERE THE INVERTER IS NOT WITHIN SIGHT OF THE AC SERVICING DISCONNECT. *2017 NEC 690.15(A)*

ALL EQUIPMENT SHALL BE INSTALLED **ACCESSIBLE TO QUALIFIED PERSONNEL** IN COMPLIANCE *WITH NEC* APPLICABLE CODES.

ALL COMPONENTS ARE **LISTED FOR THEIR INTENDED PURPOSE AND RATED FOR OUTDOOR USAGE** WHEN APPLICABLE.

STRUCTURAL AND INSTALLATION NOTES:*

RACKING SYSTEM & PV PANELS MOUNTED ON A ROOFTOP SHALL BE LISTED AND LABELED IN ACCORDANCE WITH *UL 1703* AND SHALL BE INSTALLED IN ACCORDANCE WITH THE MANUFACTURER INSTALLATION INSTRUCTIONS.

ALL PV RACKING ATTACHMENT POINTS SHALL NOT EXCEED THE PRE-ENGINEERED **MAX SPANS** OUTLINED BY THE RACKING MANUFACTURES ENGINEER OF RECORD.

GROUNDING NOTES:*

IN UNGROUNDED SYSTEMS ONLY THE DC CONDUCTORS ARE UNGROUNDED AND REQUIRE AN EQUIPMENT GROUNDING CONDUCTOR. ALL METAL ELECTRICAL EQUIPMENT AND STRUCTURAL COMPONENTS BONDED TO GROUND, IN COMPLIANCE WITH *NEC 250.134* AND *NEC 250.136(A)*.

PV EQUIPMENT INCLUDING **MODULE FRAMES AND OTHER METAL PARTS SHALL BE GROUNDED** IN COMPLIANCE WITH *NEC 690.43* AND MINIMUM GROUND CONDUCTORS SIZED IN ACCORDANCE WITH *NEC TABLE 250.122*.

CONDUCTIVE PARTS OF MODULE FRAMES, MODULE RACKING, AND ENCLOSURES SHALL BE GROUNDED IN COMPLIANCE WITH *NEC 250.134 AND NEC 250.136(A)*.

UL2703 APPROVED **MODULE AND RACK GROUNDING** SHALL BE USED AND INSTALLED PER MANUFACTURER'S INSTALLATION MANUAL. IF *UL2703* APPROVED GROUNDING IS NOT USED, MODULE GROUNDING LUGS MUST BE INSTALLED AT THE SPECIFIED GROUNDING LUG HOLES PER THE MANUFACTURER'S INSTALLATION REQUIREMENTS.

THE GROUNDING CONNECTION TO A MODULE SHALL BE ARRANGED SUCH THAT THE REMOVAL OF A MODULE DOES NOT INTERRUPT A GROUNDING CONDUCTOR TO ANOTHER MODULE.

THE GROUNDING ELECTRODE SYSTEM COMPLIES WITH *NEC 690.47* AND *NEC 250.50* THROUGH *NEC 250.106*. IF EXISTING SYSTEM IS INACCESSIBLE OR INADEQUATE, A GROUNDING ELECTRODE SYSTEM WILL BE PROVIDED IN COMPLIANCE WITH *NEC 250, NEC 690.47* AND *AHJ*.

PV SYSTEMS SHALL BE PROVIDED WITH **DC GROUND-FAULT PROTECTION** *2017 NEC 690.41(B)*

INTERCONNECTION / POC NOTES:*

ALL LOAD-SIDE INTERCONNECTIONS ARE IN COMPLIANCE WITH *2017 NEC 705.12(B)*

THE TOTAL RATING OF ALL OCPD IN SOLAR LOAD CENTERS SHALL NOT EXCEED THE RATED AMPACITY OF THE BUSBAR EXCLUDING THE OCPD PROTECTING THE BUSBAR IN COMPLIANCE WITH *NEC 705.12(B)(2)(3)(c)*

ALL FEEDER TAP (LOAD SIDE) INTERCONNECTIONS ARE IN COMPLIANCE WITH *2017 NEC 705.12(B)(2)(1)*

THE PV SYSTEM BACK-FEED BREAKER SHALL BE INSTALLED ON THE OPPOSITE END OF THE BUS BAR AND IT SHALL ALSO BE SIZED APPROPRIATELY AS PER *2017 NEC 705.12(B)(2)(3)(b)*

SUPPLY SIDE TAP INTERCONNECTIONS ARE IN COMPLIANCE WITH *NEC 705.12(A)* WITH SERVICE ENTRANCE CONDUCTORS IN COMPLIANCE WITH *NEC 230.42*

BACKFEEDING BREAKER FOR INVERTER OUTPUT IS EXEMPT FROM ADDITIONAL FASTENING *2017 NEC 705.12(B)(5)*

MICROINVERTER BRANCH CIRCUITS SHALL BE CONNECTED TO A SINGLE OCPD IN ACCORDANCE WITH THEIR INSTALLATION INSTRUCTIONS AND *NEC 690.9*

DISCONNECTS AND OCPD NOTES:*

ALL DISCONNECTING SWITCHES WILL BE CONFIGURED SO THAT ALL ENERGIZED CONDUCTORS WHEN DISCONNECT IS OPEN SHALL BE ON THE TERMINALS MARKED, "LINE SIDE" (TYPICALLY THE UPPER TERMINALS)

ALL AC DISCONNECTS SHALL BE LABELED, LOCKABLE, OF VISIBLE BREAK TYPE SWITCH WITH EXTERNAL HANDLE AND ACCESSIBLE TO QUALIFIED UTILITY PERSONNEL.

AC DISCONNECTS SHALL BE A "KNIFE BLADE" TYPE DISCONNECT. IF EXTERIOR, RATED TO NEMA 3R OR BETTER PER *NEC 110.28*

ADDITIONAL AC DISCONNECTS SHALL BE PROVIDED WHERE THE INVERTER IS NOT ADJACENT TO THE UTILITY AC DISCONNECT, OR NOT WIHTIN SIGHT OF THE UTILITY AC DISCONNECT. *2017 NEC 690.15(A)*

BOTH POSITIVE AND NEGATIVE PV CONDUCTORS REMAIN UNGROUNDED. THEREFORE, BOTH SHALL REMAIN OPEN WHERE A DISCONNECT IS REQUIRED IN COMPLIANCE WITH *2017 NEC 690.15(D)*

ALL OCPD RATINGS AND TYPES SPECIFIED SHALL BE IN COMPLIANCE WITH *NEC 690.8, 690.9, 705.12* AND *240*.

BOTH POSITIVE AND NEGATIVE DC PV CONDUCTORS ARE UNGROUNDED; BOTH REQUIRE OVERCURRENT PROTECTION IN COMPLIANCE WITH *NEC 690.9*

ARC FAULT (AFCI) DC CIRCUIT PROTECTION IS REQUIRED FOR ALL PV SYSTEMS ON OR PENETRATING A BUILDING WITH A MAXIMUM SYSTEM VOLTAGE OF 80 VOLTS OR GREATER. ALL DC PV CIRCUITS INSTALLED IN OR ON BUILDINGS WILL BE ARC-FAULT CIRCUIT PROTECTED IN COMPLIANCE WITH *NEC 690.11, UL1699B* AND SHALL BE LISTED AND LABELED IN ACCORDANCE WITH *UL 1699 (B)*.

WIRING & CONDUIT NOTES:*

ALL CONDUIT AND CONDUCTORS SHALL BE APPROVED FOR THEIR INTENDED PURPOSE INCLUDING WET LOCATIONS AND EXPOSED TO SUNLIGHT. CONDUIT AND CONDUCTOR SIZE SPECIFICATIONS ARE BASED ON THE MINIMUM CODE REQUIREMENTS AND ARE NOT LIMITED TO UP SIZING.

ALL CONDUCTORS SHALL BE SIZED IN COMPLIANCE WITH *NEC 690.8, NEC 690.7*.

ALL CONDUCTORS SHALL BE DERATED AS APPLICABLE TO THEIR RESPECTIVE ENVIRONMENT INCLUDING DIRECT SUNLIGHT IN ACCORDANCE WITH *2017 NEC 310.15(B)(3)(4)(c)*

EXPOSED UNGROUNDED DC PV SOURCE AND OUTPUT CIRCUITS SHALL USE CONDUCTORS LISTED AND IDENTIFIED AS PHOTOVOLTAIC (PV) WIRE IN COMPLIANCE *2017 NEC 690.31(C)(1)*. PV MODULES WIRE LEADS SHALL BE LISTED FOR USE WITH UNGROUNDED SYSTEMS IN COMPLIANCE WITH *2017 NEC 690.4(B)*

PV WIRE BLACK WIRE MAY BE FIELD-MARKED WHITE IN COMPLIANCE WITH *NEC 200.6 (A)(6)*.

PV MODULE CONDUCTORS LOCATED UNDER ARRAYS WILL BE SECURED IN A WORKMANLIKE MANNER IN COMPLIANCE WITH *NEC 110.12*.

VOLTAGE DROP CALCULATIONS IN THIS PLAN SET ARE CALCULATED ON CIRCUITS 50' IN LENGTH OR LONGER, THE TOTAL VOLTAGE DROP FROM INVERTER TO POINT OF CONNECTION OR UTILITY TRANSFORMER ARE NOT CALCULATED. ELECTRICAL CONTRACTOR MUST EVALUATE AND FIELD VERIFY INVERTER MANUFACTURES MAX VOLTAGE DROP REQUIREMENTS AND DETERMINE THE TOTAL VOLTAGE DROP WITHIN CIRCUITS AS DIRECTED BY MANUFACTURER AND COMPLY WITH SUCH LIMITATIONS AND REQUIREMENTS, (TYPICALLY 2% FROM INVERTER TO POI/POC, AND 3% FROM INVERTER TO UTILITY TRANSFORMER.)

WATERPROOFING:*

ALL NEW **ROOFTOP PENETRATIONS** SHALL BE SEALED AND MADE WEATHER TIGHT WITH APPROVED CHEMICAL SEALANT AND FLASHINGS WHERE REQUIRED PER CODE AND GENERAL BUILDING AND ROOFING WORKMANSHIP STANDARDS BY A LICENSED CONTRACTOR.

ALL **EXTERIOR ELECTRICAL EQUIPMENT, SHALL BE NEMA 3R** OR BETTER RATED. ALL EXTERIOR CONDUIT AND CONNECTORS SHALL BE RATED FOR WET LOCATIONS.

*ALL NOTES ARE AS APPLICABLE TO THIS PROJECT. DISREGARD ANY NOTES THAT DO NOT APPLY TO THIS PROJECT.

SCOTT E WYSSLING
LICENSED
No. 81551
STATE OF FLORIDA
PROFESSIONAL ENGINEER

Wyssling Consulting, PLLC
76 N Meadowbrook Drive Alpine UT 84004
Florida License # RY34912
Signed 5/31/2022

THIS PLAN HAS BEEN ELECTRONICALLY SIGNED AND SEALED BY SCOTT WYSSLING, PE USING A DIGITAL SIGNATURE AND DATE. PRINTED COPIES OF THIS DOCUMENT ARE NOT CONSIDERED SIGNED AND SEALED AND THE SIGNATURE MUST BE VERIFIED ON ANY ELECTRONIC COPIES

REV	DATE	RELEASE
	05/31/2022	SUBMIT FOR PERMIT

GENERAL NOTES

N-001

3.300 kW PHOTOVOLTAIC PLANS

NAME	Larson, Carrie
ADDRESS	2018 SW Fallon Ln
ADDRESS	Lake City, FL 32025
APN	

Daybreak Install LLC
CVC56966
2100 N Main St Ste. 212
Fort Worth, TX 76164
(817) 501-4922

PV AC DISCONNECT LOCATED ON ACCESSIBLE EXTERIOR WALL
WITH EXTERNAL HANDLE VISIBLE, LOCKABLE & LABELED
WITHIN 10 FEET OF THE METER

NOTE: ALL ELECTRICAL LAYOUT DETAILS ON SHEET E-100

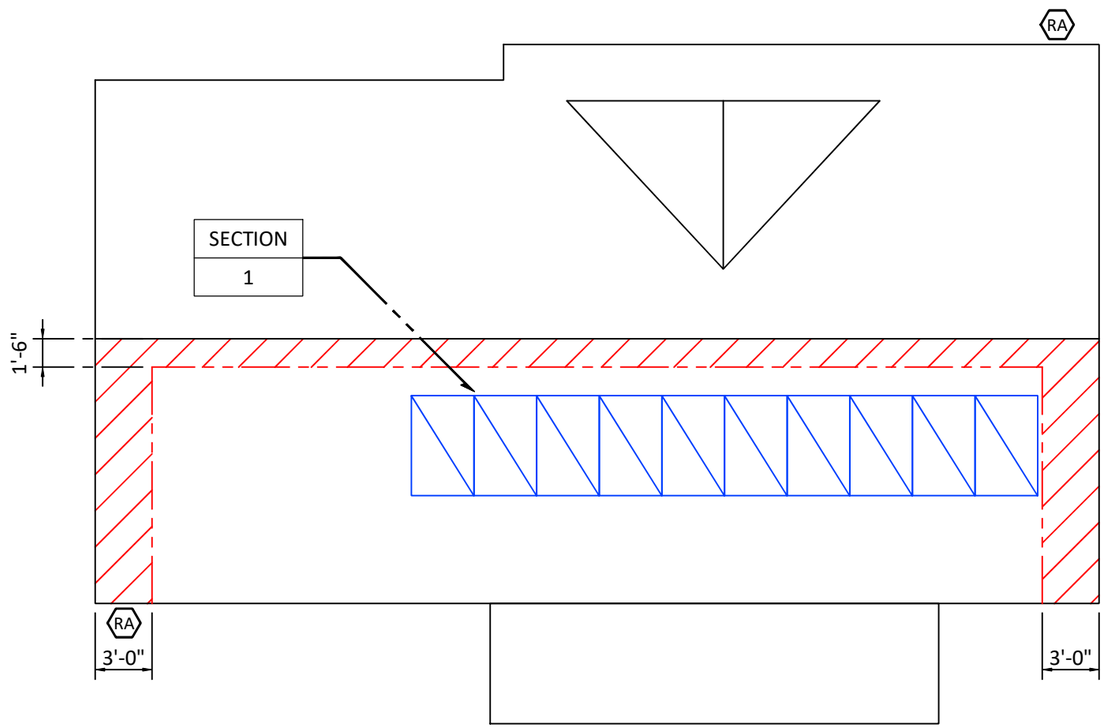

QTY 10 PEIMAR SM330M (BF) MODULES QTY 1 SolarEdge SE3000H-US (240V) INVERTER

2018 IFC ROOF ACCESS REQUIREMENTS

THE FOLLOWING INFORMATION INDICATES THE REQUIRED ROOF TOP CLEARANCES FOR PANELS/ARRAYS INSTALLED ON RESIDENTIAL BUILDINGS WITH SLOPES GREATER 2:12:

ROOF ACCESS POINTS – ROOF ACCESS POINTS SHALL BE LOCATED IN AREAS THAT DO NOT REQUIRE THE PLACEMENT OF GROUND LADDERS OVER OPENINGS SUCH AS WINDOWS OR DOORS, AND LOCATED AT THE STRONG POINTS OF BUILDING CONSTRUCTION IN LOCATIONS WHERE THE ACCESS POINT DOES NOT CONFLICT WITH OVERHEAD OBSTRUCTIONS SUCH AS TREE LIMBS, WIRE, OR SIGNS.

PRIMARY FIRECODE PATHWAY AND SECONDARY PATHWAYS – THERE SHALL BE NO LESS THAN TWO MINIMUM 36"PATHWAYS ON SEPARATE ROOF SECTION TO THE RIDGE OF THE HOME. ONE OF THOSE PATHWAYS WILL BE ACCESSIBLE FROM STREET SIDE OF THE HOME OR ON THE DRIVEWAY WITH MINIMAL OBSTRUCTIONS. FOR EACH ROOF PLANE WITH PANELS/MODULES A MINIMIM 36-INCH-WIDE PATHWAY FROM THE LOWEST ROOF EDGE TO RIDGE SHALL BE PROVIDED ON THE SAME ROOF PLANE AS THE ARRAY, ON AN ADJACENT ROOF PLANE, OR STRADDLING THE SAME AND ADJACENT ROOF PLANES.

SET-BACKS AT RIDGE – PANELS/MODULES OCCUPYING 33 PERCENT OR LESS OF THE PLAN VIEW TOTAL ROOF AREA, A MINIMUM 18 INCHES SETBACK IS REQUIRED ON BOTH SIDES [HM1] [DR2] OF A HORIZONTAL RIDGE. FOR PANELS/MODULES OCCUPYING MORE THAN 33 PERCENT OF THE PLAN VIEW TOTAL ROOF AREA, A MINIMUM OF 36 INCHES WIDE SETBACK IS REQUIRED ON BOTH SIDES.

EMERGENCY ESCAPE AND RESCUE OPENING – PANELS/MODULES INSTALLED ON DWELLINGS SHALL NOT BE PLACED ON THE PORTION OF A ROOF THAT IS BELOW AN EMERGENCY ESCAPE AND RESCUE OPENING. A 36-INCH-WIDE PATHWAY SHALL BE PROVIDED TO THE EMERGENCY RESCUE AND ESCAPE OPENING.

-SEE HATCH DEFINITION BELOW.

NOTE: DESIGNATION OF RIDGE, HIP, AND VALLEY DOES NOT APPLY TO ROOFS WITH 2:12 OR LESS PITCH. DETACHED, NONHABITABLE GROUP U STRUCTURES INCLUDING, BUT NOT LIMITED TO, PARKING SHADE STRUCTURES, CARPORTS, SOLAR TRELLISES AND SIMILAR STRUCTURES SHALL NOT BE SUBJECT TO THE REQUIREMENTS OR WHERE THE FIRE CODE OFFICIAL HAS DETERMINED ROOFTOP OPERATIONS WILL NOT BE EMPLOYED.

PV SITE LAYOUT LEGEND

SECTION / 1	PV ARRAY TAG SECTION # MODULE GROUP
RA	ROOF ACCESS POINT
SA	SITE ACCESS
GA	GATE ACCESS

AZIMUTH AND TILT TABLE

SECTION #	AZIMUTH	ROOF PITCH / TILT
SECTION-1	180	20°

SQUARE FOOTAGE CALCULATIONS

ROOF REFERENCE	SQUARE FOOTAGE
EXISTING ROOF	1523
SECTION-1	180
TOTAL PERCENTAGE	11.82%

* EXISTING DIMENSIONS ARE APPROX.
CONFIRM ALL DIMENSIONS SHOWN

SCALE: 1/8"= 1'0"@ SHEET SIZE A3

SCOTT E WYSSLING LICENSE No. 8155 STATE OF FLORIDA PROFESSIONAL ENGINEER

Wyssling Consulting, PLLC
76 N Meadowbrook Drive Alpine UT 84004
Florida License # RY34912
Signed 5/31/2022

THIS PLAN HAS BEEN ELECTRONICALLY SIGNED AND SEALED BY SCOTT WYSSLING, PE USING A DIGITAL SIGNATURE AND DATE. PRINTED COPIES OF THIS DOCUMENT ARE NOT CONSIDERED SIGNED AND SEALED AND THE SIGNATURE MUST BE VERIFIED ON ANY ELECTRONIC COPIES

NORTH

REV	DATE	RELEASE
	05/31/2022	SUBMIT FOR PERMIT

PV-100R

PV ARRAY LAYOUT

3.300 kW PHOTOVOLTAIC PLANS

NAME	Larson, Carrie
ADDRESS	2018 SW Fallon Ln
ADDRESS	Lake City, FL 32025
APN	

Daybreak Install LLC
CVC56966
2100 N Main St Ste. 212
Fort Worth, TX 76164
(817) 501-4922

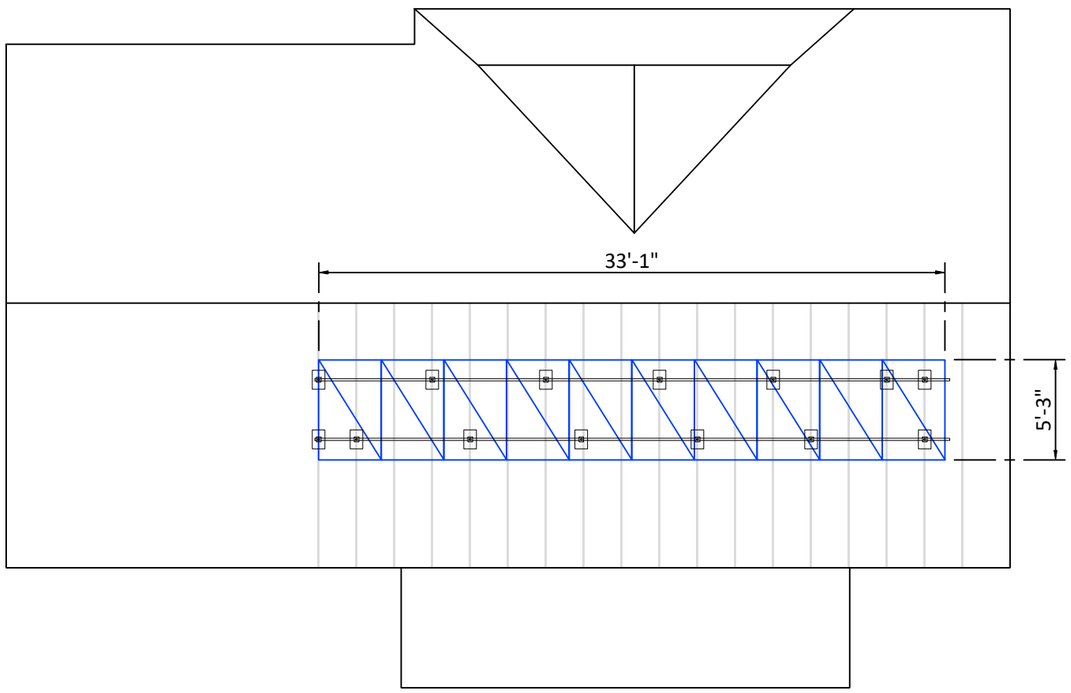

QTY 10 PEIMAR SM330M (BF) MODULES QTY 1 SolarEdge SE3000H-US (240V) INVERTER

SHEET NOTES

A. FOR MANUFACTURED PLATED WOOD TRUSSES AT SLOPES OF FLAT TO 6:12, THE HORIZONTAL ANCHOR SPACING SHALL NOT EXCEED 6'-0"AND ANCHORS IN ADJACENT ROWS SHALL BE STAGGERED. UNLESS NOTED OTHERWISE PER RACKING MANUFACTURER CERTIFIED ENGINEERED PRODUCT AND LOCAL REQUIREMENTS.

B. ANCHORS ARE ALSO KNOWN AS "STAND-OFFS," "MOUNTS," OR "STANCHIONS." HORIZONTAL ANCHOR SPACING IS ALSO KNOWN AS "CROSS-SLOPE" OR "EAST-WEST" ANCHOR SPACING. MAXIMUM HORIZONTAL ANCHOR SPACING SHOWN IN DETAIL. UNLESS NOTED OTHERWISE PER RACKING MANUFACTURER CERTIFIED ENGINEERED PRODUCT AND LOCAL REQUIREMENTS. SEE "TABLE OF DIMENSIONS" EACH SECTION DETAILED FOR HORIZONTAL ANCHOR SPACING.

C. SEE SHEET S-200 FOR SPECIFIC RACKING COMPONENT MANUFACTURERS.

PV RACKING LEGEND

ROOF RACKING RAIL

ROOF RACKING RAIL SPLICE

ROOF RACKING STANCHION W/ RETRO FIT FLASHING

SECTION
1

PV ARRAY TAG SECTION # MODULE GROUP

* DETAILS IN TOP VIEW

EXISTING ROOF CONSTRUCTION

COMPONENT	TYPE
ROOF STRUCTURAL CONSTRUCTION	Pre-Eng Roof Trusses 24" O.C.
FRAMING INFO	2"x4" @ 24" MAX OC
ROOFING COVERING	Trapezoidal Metal
RACKING MAX PSF	2.87 PSF

RACKING BILL OF MATERIALS (BOM)

COMPONENT	QTY	MODEL	LENGTH
PV RAIL 1			
PV RAIL SPLICE 1			
PV RAIL 2			
PV RAIL SPLICE 2			
RAIL TO ROOF ATTACHMENT			

SCOTT E WYSSLING LICENSE No. 81551 STATE OF FLORIDA PROFESSIONAL ENGINEER

THIS PLAN HAS BEEN ELECTRONICALLY SIGNED AND SEALED BY SCOTT WYSSLING, PE USING A DIGITAL SIGNATURE AND DATE. PRINTED COPIES OF THIS DOCUMENT ARE NOT CONSIDERED SIGNED AND SEALED AND THE SIGNATURE MUST BE VERIFIED ON ANY ELECTRONIC COPIES

Wyssling Consulting, PLLC
76 N Meadowbrook Drive Alpine UT 84004
Florida License # RY34912
Signed 5/31/2022

NORTH

* EXISTING ROOF DIMENSIONS ARE APPROX. CONFIRM ALL DIMENSIONS SHOWN

SCALE: 1/8"= 1'0"@ SHEET SIZE A3

REV	DATE	RELEASE
	05/31/2022	SUBMIT FOR PERMIT

RACKING LAYOUT

S-100

3.300 kW PHOTOVOLTAIC PLANS

NAME	Larson, Carrie
ADDRESS	2018 SW Fallon Ln
ADDRESS	Lake City, FL 32025
APN	

Daybreak Install LLC
CVC56966
2100 N Main St Ste. 212
Fort Worth, TX 76164
(817) 501-4922

1 MANUF TRUSS / TRUSS - PORTRAIT — SCALE: NTS

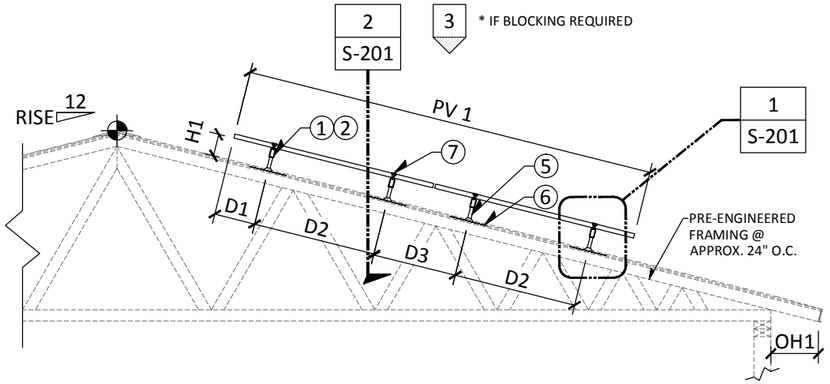

** COMP SHINGLE ROOF IN EXAMPLE. SAME ATTACHMENT FOR STANDING SEAM METAL ROOF APPLIES.

TABLE OF DIMENSIONS

DIM	COMPONENT	DIMENSIONS	DIM	COMPONENT	DIMENSIONS
H1	PV MODULE HGT. ABOVE ROOF	3" - 6" TYP	RISE	ROOF PITCH	20°
OH1	OVERHANG IN THIS AREA			MAX RAFTER SPAN	ENGINEERED TRUSS
UPSLOPE ANCHOR SPACING					
D1	RAIL OVERHANG	16.39"	D3	STANCHION O.C.	33.03"
D2	STANCHION O.C.	32.78"	D4	MIN./MAX. STANCHION O.C.	

2 MANUF TRUSS / TRUSS - LANDSCAPE — SCALE: NTS

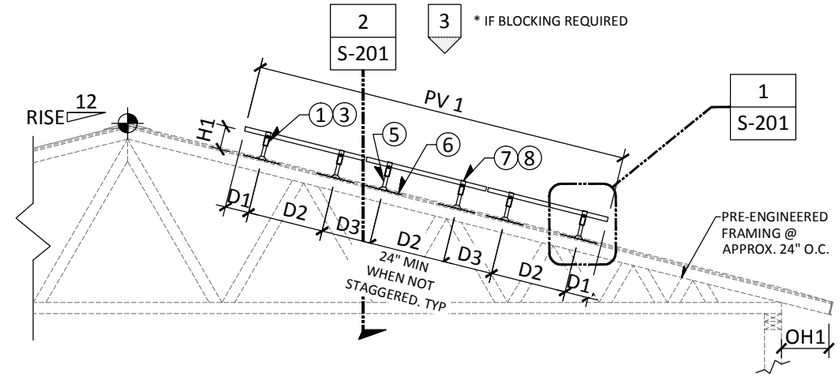

** COMP SHINGLE ROOF IN EXAMPLE. SAME ATTACHMENT FOR STANDING SEAM METAL ROOF APPLIES.

TABLE OF DIMENSIONS

DIM	COMPONENT	DIMENSIONS	DIM	COMPONENT	DIMENSIONS
H1	PV MODULE HGT. ABOVE ROOF	3" - 6" TYP	RISE	ROOF PITCH	20°
OH1	OVERHANG IN THIS AREA			MAX RAFTER SPAN	ENGINEERED TRUSS
UPSLOPE ANCHOR SPACING					
D1	RAIL OVERHANG	9.86"	D3	STANCHION O.C.	19.98"
D2	STANCHION O.C.	19.73"	D4	MIN./MAX. STANCHION O.C.	

SHEET NOTES

A. THESE NOTES APPLY TO PRE-ENGINEERED PLATED TRUSSES.

B. THE ROOF STRUCTURE CONFORMED TO BUILDING CODE REQUIREMENTS AT THE TIME IT WAS BUILT.

C. THE ROOF SHEATHING IS AT LEAST 7/16" THICK ORIENTED STRAND BOARD OR PLYWOOD. 1X SKIP SHEATHING IS ACCEPTABLE.

D. THE SOLAR ARRAY DISPLACES ROOF LIVE LOADS (TEMPORARY CONSTRUCTION LOADS) THAT THE ROOF WAS ORIGINALLY DESIGNED TO CARRY.

E. IF THE ROOF COVERING IS SHINGLES; IT SHALL HAVE NO MORE THAN TWO LAYERS. (SHOWN)

F. IF ROOF COVERING IS TILE; ITS A SINGLE LAYER. ALL TILES ON PLANE OF PV COMPONENTS ARE SECURE. (NOT SHOWN IN DETAIL)

G. THE ROOF STRUCTURE IS STRUCTURALLY SOUND, WITHOUT SIGNS OF ALTERATIONS OR SIGNIFICANT STRUCTURAL DETERIORATION OR SAGGING.

H. THE PV MODULES ARE PARALLEL WITH THE ROOF SURFACE.

I. THERE IS A 2" TO 10" GAP BETWEEN UNDERSIDE OF MODULE AND THE ROOF SURFACE. (SEE TABLE OF DIMENSIONS "H1")

J. UPSLOPE ANCHOR SPACING MAY VARY FROM LISTED TABLES. STANCHIONS CAN BE PLACED NO CLOSER THAN 24" O.C.

K. DETAILS SHOWN ARE A REPRESENTATION OF EXISTING ROOF CONDITIONS. ACTUAL FIELD CONDITIONS MAY VARY. DETAILS ARE SHOWN FOR DIAGRAM USE ONLY. REFER TO TABLES FOR DESIGN CRITERIA.

L. ALL PLUMBING AND ROOF VENTS SHALL NOT BE OBSTRUCTED BY PV MODULES AND EQUIPMENT.

M.

3 EXPLODED STANCHION DETAIL — SCALE: NTS

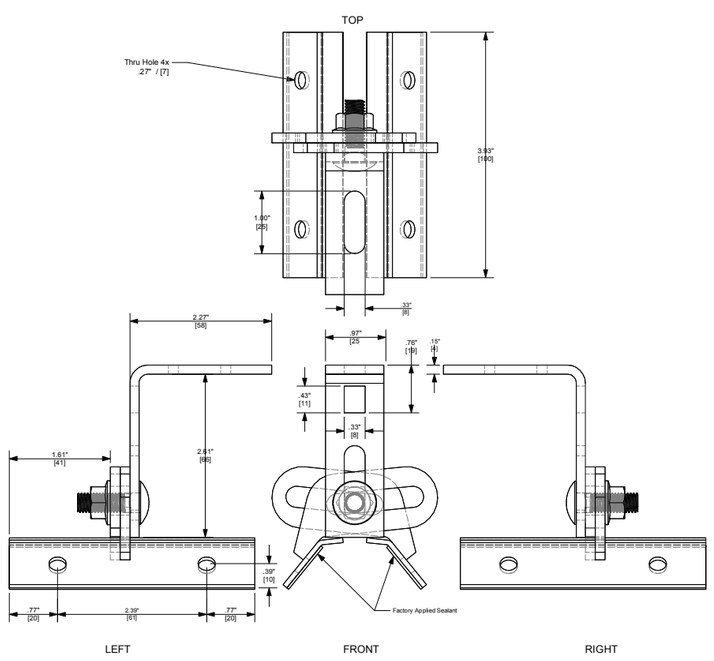

4 STANCHION SPACING DETAIL — SCALE: NTS

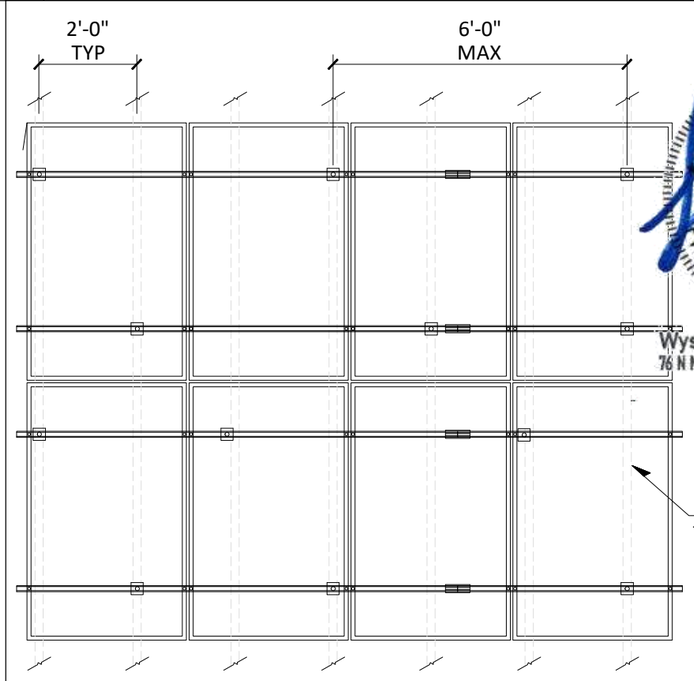

SCOTT E WYSSLING
LICENSE
No. 81551
STATE OF
FLORIDA
PROFESSIONAL ENGINEER

Wyssling Consulting, PLLC
76 N Meadowbrook Drive Alpine UT 84004
Florida License # RY34912
Signed 5/31/2022

THIS PLAN HAS BEEN ELECTRONICALLY SIGNED AND SEALED BY SCOTT WYSSLING, PE USING A DIGITAL SIGNATURE AND DATE. PRINTED COPIES OF THIS DOCUMENT ARE NOT CONSIDERED SIGNED AND SEALED AND THE SIGNATURE MUST BE VERIFIED ON ANY ELECTRONIC COPIES

PV RACKING LEGEND

ROOF RACKING RAIL

ROOF RACKING RAIL SPLICE

ROOF RACKING STANCHION W/ RETRO FIT FLASHING

SECTION
1

PV ARRAY TAG SECTION # MODULE GROUP

* DETAILS IN SECTION OR SIDE VIEW

EXISTING ROOF CONSTRUCTION

COMPONENT	TYPE
MEAN ROOF HGT MAX	15'
ROOFING COVERING	Trapezoidal Metal

TABLE OF COMPONENTS

#	COMPONENT	MODEL
1	PV RAIL TYPE 1	XR100 Rail
2	PV RAIL SPLICE TYPE 1	PER RAIL MANUFACTURER
3	PV RAIL TYPE 2	NOT USED
4	PV RAIL SPLICE TYPE 2	PER RAIL MANUFACTURER
5	STANCHION	ProteaBracket
6	FLASHING	N/A
7	MID CLAMP	PER RAIL MANUFACTURER
8	END CLAMP	PER RAIL MANUFACTURER

REV	DATE	RELEASE
	05/31/2022	SUBMIT FOR PERMIT

SECTION ELEVATIONS

S-200

3.300 kW PHOTOVOLTAIC PLANS

NAME	Larson, Carrie
ADDRESS	2018 SW Fallon Ln
ADDRESS	Lake City, FL 32025
APN	

Daybreak Install LLC
CVC56966
2100 N Main St Ste. 212
Fort Worth, TX 76164
(817) 501-4922

1 STANCHION ATTACHMENT DETAIL — SCALE: NTS

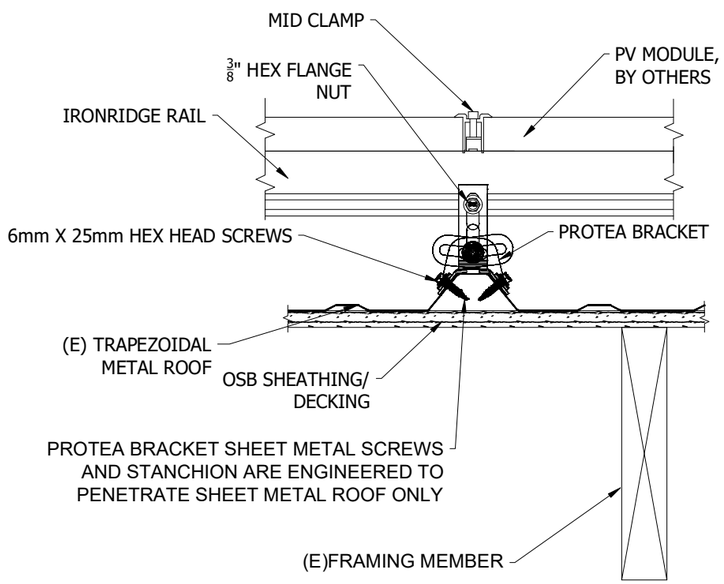

2 RAIL SPLICE DETAIL - HORIZONTAL RAIL — SCALE: NTS

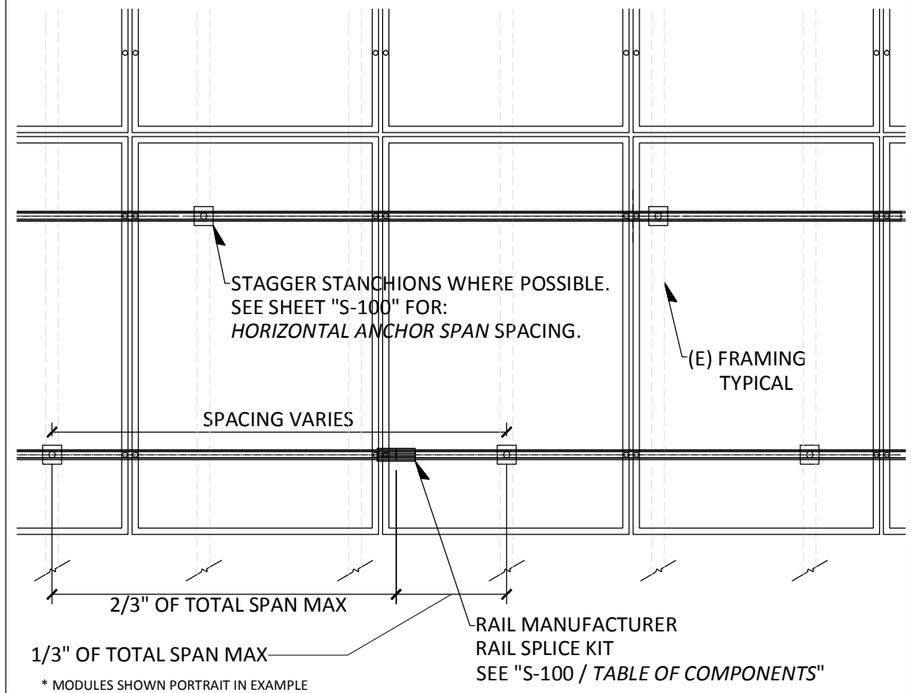

* MODULES SHOWN PORTRAIT IN EXAMPLE

SHEET NOTES

1. A MINIMUM OF (1) 5/16" DIAMETER LAG SCREWS WITH 2.5" EMBEDMENT INTO THE RAFTER USED, OR THE ANCHOR FASTENER MUST MEET THE MANUFACTURER'S ENGINEERING.
2. ADHERE TO RACKING MANUFACTURERS INSTALLATION INSTRUCTIONS PERTAINING TO CANTILEVER.

PV RACKING LEGEND

- ROOF RACKING RAIL
- ROOF RACKING RAIL SPLICE
- ROOF RACKING STANCHION W/ RETRO FIT FLASHING
- SECTION / 1 — PV ARRAY TAG SECTION # MODULE GROUP

* DETAILS IN SECTION OR SIDE VIEW

3 RAIL EXTENSION DETAIL — SCALE: NTS

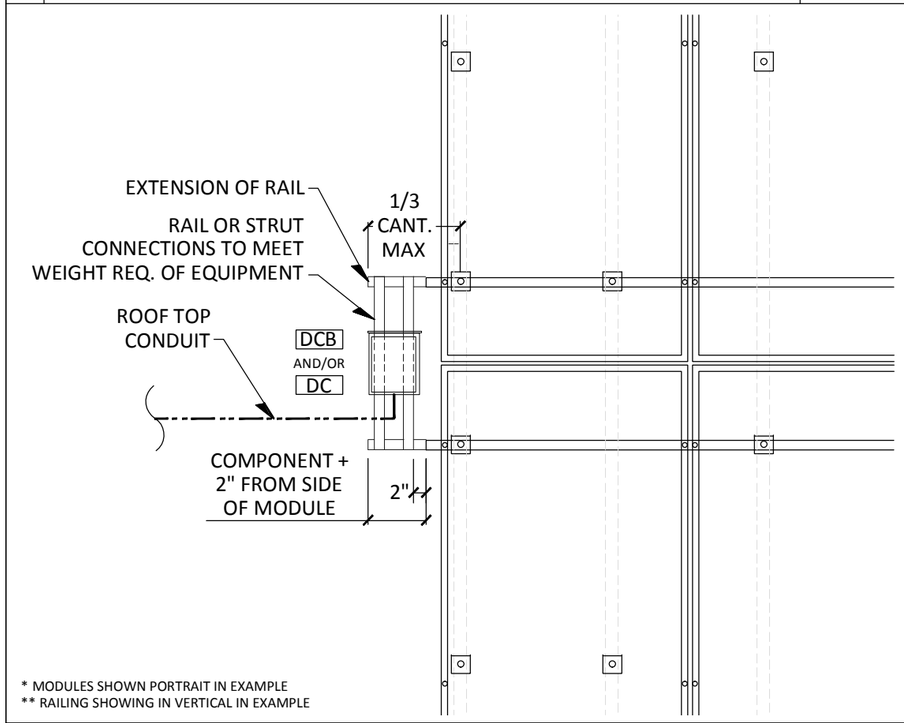

* MODULES SHOWN PORTRAIT IN EXAMPLE
** RAILING SHOWING IN VERTICAL IN EXAMPLE

4 NOT USED — SCALE: NTS

THIS PLAN HAS BEEN ELECTRONICALLY SIGNED AND SEALED BY SCOTT WYSSLING, PE USING A DIGITAL SIGNATURE AND DATE. PRINTED COPIES OF THIS DOCUMENT ARE NOT CONSIDERED SIGNED AND SEALED AND THE SIGNATURE MUST BE VERIFIED ON ANY ELECTRONIC COPIES

SCOTT E WYSSLING LICENSE No. 8155 STATE OF FLORIDA PROFESSIONAL ENGINEER

Wyssling Consulting, PLLC
76 N Meadowbrook Drive Alpine UT 84004
Florida License # RY34912
Signed 5/31/2022

REV	DATE	RELEASE
	05/31/2022	SUBMIT FOR PERMIT

ATTACHMENT DETAILS

S-201

3.300 kW PHOTOVOLTAIC PLANS

NAME	Larson, Carrie
ADDRESS	2018 SW Fallon Ln
ADDRESS	Lake City, FL 32025
APN	

Daybreak Install LLC
CVC56966
2100 N Main St Ste. 212
Fort Worth, TX 76164
(817) 501-4922

PV MODULE #1 SPECIFICATIONS

MANUFACTURER	PEIMAR	
MODEL NUMBER	SM330M (BF)	
WEIGHT	41.01	lbs
DIMENSIONS	65.55 x 39.45 x 1.57	L" x W" x D"/THICK
PEAK POWER @ STC (Pmax)	330	WATTS
Voc (OPEN-CIRCUIT VOLTAGE)	41.91	VOLTS DC
Vmp (MAX-POWER VOLTAGE)	34.35	VOLTS DC
isc (SHORT-CIRCUIT CURRENT)	10.18	AMPS
imp (OPERATING CURRENT)	9.61	AMPS
MFR. Voc TEMP COEFFICIENT	-0.28	%/K
MAX SERIES FUSE RATING	20.0	AMPS
TEMP. CORRECTED Voc	45.26	VOLTS DC

DC/DC OPTIMIZER (IF APPL.)

MANUFACTURER	SolarEdge Technologies	
MODEL NUMBER	P370 Single (240V)	
WEIGHT	1.5	lbs
RATED OUTPUT isc	15	AMPS
MAX OUTPUT VOLTAGE	60	VOLTS
MAX INPUT VOLTAGE Voc	60	VOLTS

THIS PLAN HAS BEEN ELECTRONICALLY SIGNED AND SEALED BY SCOTT WYSSLING, PE USING A DIGITAL SIGNATURE AND DATE. PRINTED COPIES OF THIS DOCUMENT ARE NOT CONSIDERED SIGNED AND SEALED AND THE SIGNATURE MUST BE VERIFIED ON ANY ELECTRONIC COPIES

SCOTT E WYSSLING LICENSE No 81551 STATE OF FLORIDA PROFESSIONAL ENGINEER

Wyssling Consulting, PLLC
76 N Meadowbrook Drive Alpine UT 84004
Florida License # RY34912

Signed 5/31/2022

DC COMBINER / DISCONNECT #1

MANUFACTURER		
MODEL NUMBER		
OCPD (DISCONNECT TYPE)		
WEIGHT		lbs
NEMA RATING		
LOCATION OF COMPONENT		
DC INPUT		
SERIES FUSE RATING FOR PV MODULES		AMPS (OCPD)
QUANTITY OF PV SOURCE CIRCUITS		QTY
MAX PV MODULE Voc		VOLTS DC
MAX # OF MODULES IN CIRCUIT		QTY
MAX ALLOWED INPUT VOLTAGE		VOLTS DC
MAX INPUT FUSE/BREAKER RATING		AMPS
DC OUTPUT		
MAX CIRCUIT OUTPUT CURRENT		AMPS
MAX CONT. OUTPUT CURRENT		AMPS

DC COMBINER / DISCONNECT #2 (IF APPL.)

MANUFACTURER		
MODEL NUMBER		
OCPD (DISCONNECT TYPE)		
WEIGHT		lbs
NEMA RATING		
LOCATION OF COMPONENT		
DC INPUT		
SERIES FUSE RATING FOR PV MODULES		AMPS (OCPD)
QUANTITY OF PV SOURCE CIRCUITS		QTY
MAX PV MODULE Voc		VOLTS DC
MAX # OF MODULES IN CIRCUIT		QTY
MAX ALLOWED INPUT VOLTAGE		VOLTS DC
MAX INPUT FUSE/BREAKER RATING		AMPS
DC OUTPUT		
MAX CIRCUIT OUTPUT CURRENT		AMPS
MAX CONT. OUTPUT CURRENT		AMPS

DC COMBINER / DISCONNECT #3 (IF APPL.)

MANUFACTURER		
MODEL NUMBER		
OCPD (DISCONNECT TYPE)		
WEIGHT		lbs
NEMA RATING		
LOCATION OF COMPONENT		
DC INPUT		
SERIES FUSE RATING FOR PV MODULES		AMPS (OCPD)
QUANTITY OF PV SOURCE CIRCUITS		QTY
MAX PV MODULE Voc		VOLTS DC
MAX # OF MODULES IN CIRCUIT		QTY
MAX ALLOWED INPUT VOLTAGE		VOLTS DC
MAX INPUT FUSE/BREAKER RATING		AMPS
DC OUTPUT		
MAX CIRCUIT OUTPUT CURRENT		AMPS
MAX CONT. OUTPUT CURRENT		AMPS

STRING INVERTER #1 SPECIFICATIONS

MANUFACTURER	SolarEdge	
MODEL NUMBER	SE3000H-US (240V)	
QUANTITY	1	INVERTER(S)
NOMINAL POWER RATING	3000	WATT AC
WEIGHT	17.2	lbs.
DC INPUT		
Max INPUT DC VOLTAGE	480	VOLTS DC
Min. MPPT VOLTAGE RANGE	380	VOLTS DC
Max. MPPT VOLTAGE RANGE	480	VOLTS DC
Max INPUT CURRENT	8.5	AMPS
MPPT QTY	N/A	
INTEGRATED DC DISCONNECT	Yes	COMPLY W/NEC 690.17
INTEGRATED AC DISCONNECT	NO	
AC OUTPUT		
NOMINAL VOLTAGE OUTPUT	240	VOLTS AC
MAX. AC APPARENT POWER	3000	WATTS
MAX OVERCURRENT PROTECTION (OCPD)	20	AMPS
MAX. OUTPUT CURRENT	12.5	AMPS - MAX

STRING INVERTER #2 SPECIFICATIONS (IF APPL.)

MANUFACTURER		
MODEL NUMBER		
QUANTITY		INVERTER(S)
NOMINAL POWER RATING		WATT AC
WEIGHT		lbs.
DC INPUT		
Max INPUT DC VOLTAGE		VOLTS DC
Min. MPPT VOLTAGE RANGE		VOLTS DC
Max. MPPT VOLTAGE RANGE		VOLTS DC
Max INPUT CURRENT		AMPS
MPPT QTY		
INTEGRATED DC DISCONNECT		COMPLY W/NEC 690.17
INTEGRATED AC DISCONNECT		
AC OUTPUT		
NOMINAL VOLTAGE OUTPUT		VOLTS AC
MAX. AC APPARENT POWER		WATTS
MAX OVERCURRENT PROTECTION (OCPD)		AMPS
MAX. OUTPUT CURRENT		AMPS - MAX

AC COMBINER #1 (SOLAR LOAD CENTER)

MANUFACTURER		
MODEL NUMBER		
RATED OPERATIONAL VOLTAGE		VOLTS
RATED CURRENT		AMPS
NUMBER OF POLES		P
NEMA RATING		
MAIN BREAKER SIZE		AMPS
TOTAL INPUT CURRENT		AMPS
NUMBER OF BRANCH CIRCUITS		CIRCUITS

AC COMBINER #2 (SOLAR LOAD CENTER)

MANUFACTURER		
MODEL NUMBER		
RATED OPERATIONAL VOLTAGE		VOLTS
RATED CURRENT		AMPS
NUMBER OF POLES		P
NEMA RATING		
MAIN BREAKER SIZE		AMPS
TOTAL INPUT CURRENT		AMPS
NUMBER OF BRANCH CIRCUITS		CIRCUITS

AC DISCONNECT #1 (IF APPL.)

MANUFACTURER	Eaton	
MODEL NUMBER	DG222NRB	
QUANTITY	1	AC DISCO.(S)
DISCONNECT DEVICE TYPE	Fusible	
RATED OPERATIONAL VOLTAGE	240	VOLTS
RATED CURRENT	60	AMPS
NUMBER OF POLES	2	P
NEMA RATING	3R	
FUSE RATING	20	AMPS
TOTAL INPUT CURRENT	12.5	AMPS

AC DISCONNECT #2 (IF APPL.)

MANUFACTURER		
MODEL NUMBER		
QUANTITY		AC DISCO.(S)
DISCONNECT DEVICE TYPE		
RATED OPERATIONAL VOLTAGE		VOLTS
RATED CURRENT		AMPS
NUMBER OF POLES		P
NEMA RATING		
FUSE RATING		AMPS
TOTAL INPUT CURRENT		AMPS

AC SUB-PANEL #1 (IF APPL.)

NEW OR EXISTING		
MAKE / MODEL		
TYPE OF PANEL		
NUMBER OF POLES		P
NEMA RATING		
BUSS BAR RATING		AMPS
SUB-PANEL MAIN BREAKER		AMPS
MAIN SERVICE PANEL P.O.C. BREAKER		AMPS
SUM OF EXISTING CIRCUIT BREAKERS		AMPS
MAX ALLOWABLE SOLAR CURRENT		AMPS
PV BACKFEED BREAKER #1		AMPS (Imax)
PV BACKFEED BREAKER #2		AMPS (Imax)
PV BACKFEED BREAKER #3		AMPS (Imax)
PV BACKFEED BREAKER #4		AMPS (Imax)

MAIN SERVICE PANEL (IF APPL.)

NEW OR EXISTING	EXISTING	
ELECTRICAL SERVICE	120/240V Single Phase	
BUSS BAR RATED CURRENT	200	AMPS
MAIN BREAKER RATED CURRENT	200	AMPS
SUM OF EXISTING CIRCUIT BREAKERS		AMPS
MAX ALLOWABLE SOLAR CURRENT 100%	0	AMPS
MAX ALLOWABLE SOLAR CURRENT 120%	40	AMPS (Imax)
PV BACKFEED BREAKER #1		AMPS (Imax)
PV BACKFEED BREAKER #2		AMPS (Imax)
PV BACKFEED BREAKER #3		AMPS (Imax)
PV BACKFEED BREAKER #4		AMPS (Imax)
ALT. ENERGY BACKFEED BREAKER (IF APPL.)		AMPS (Imax)

PV SYSTEM MAXIMUM VOLTAGE (MODULE Voc_{MAX})

DATA SOURCE	SOLARABCS.ORG/ABOUT/PUBLICATIONS/REPORTS/ EXPEDITED-PERMIT/MAP/											
EXTREME MIN. TEMP. [°C]		STC TEMPERATURE [°C]		CORRECTED TEMPERATURE		MFR. P_{MAX} TEMP COEFFICIENT [-0.#%/C] * 100		FORMULA		CORRECTED TEMP. COEFFICIENT		MODULE Voc [VDC]		TEMPERATURE CORRECTED OPEN CIRCUIT VOLTAGE
-5	-	25	=	-30	*	-0.28%	=	0.08	+ 1	1.08	*	41.91	=	45.26

REV	DATE	RELEASE
	05/31/2022	SUBMIT FOR PERMIT

EQUIP. CALCULATIONS

E-001

3.300 kW PHOTOVOLTAIC PLANS

NAME	Larson, Carrie
ADDRESS	2018 SW Fallon Ln
ADDRESS	Lake City, FL 32025
APN	

Daybreak Install LLC
CVC56966
2100 N Main St Ste. 212
Fort Worth, TX 76164
(817) 501-4922

WIRE AND CONDUCTOR NOTES

1. ANY CONDUCTOR LENGTH UNDER 50' DOESN'T REQUIRE VOLTAGE DROP CALCULATIONS
2. BECAUSE WE ARE UNABLE TO DETERMINE THE EXACT PATH THE INSTALLER WILL RUN CONDUCTORS; WORST CASE SCENARIOS, ROUNDING UP SIZES OF CONDUCTORS THAT ARE DEEMED QUESTIONABLE TO PREVENT ISSUES RELATED TO USING CONDUCTORS THAT ARE IMPROPERLY SIZED.
3. WIRING METHODS IN THESE CALCULATIONS DON'T EXCEED 1000 VOLTS
4. CEC/NEC 310.15(A)(2) (AS APPLICABLE) WHERE TWO DIFFERENT AMPACITIES APPLY TO ADJACENT PORTIONS OF A CIRCUIT, THE HIGHER AMPACITY SHALL BE PERMITTED TO BE USED BEYOND THE POINT OF TRANSITION, A DISTANCE EQUAL TO 10'-0" (3 METERS) OR 10% OF THE CIRCUIT LENGTH FIGURED AT THE HIGHER AMPACITY, WHICHEVER IS LESS. WHEN LESS THAN 10'-0" OR 10% OF THE CIRCUIT LENGTH; THE LESSER AMPACITY MAY BE USED.

WIRE COLOR CODING (2017) NEC SECTIONS 250.119 & 200.6

PV DC WIRING		AC WIRING	
EQUIPMENT GROUND	GREEN OR BARE, OR GREEN/YELLOW	EQUIPMENT GROUND	GREEN OR BARE, OR GREEN/YELLOW
UNGROUNDED CONDUCTOR(S). TYPICALLY POSITIVE	ANY COLOR OTHER THAN GREEN OR WHITE/GRAY	GROUNDED CONDUCTOR (NEUTRAL)	WHITE OR GRAY
	CONVENTION IS RED FOR GROUNDED SYSTEMS	UNGROUNDED CONDUCTOR(S) HOT: L1 AND L2	ANY COLOR OTHER THAN GREEN OR WHITE/GRAY ALLOWED.
	RED (+) AND BLACK (-) FOR UNGROUNDED SYSTEMS		CONVENTION IS L1 BLACK
			CONVENTION IS L2 RED

DC WIRE AND CONDUIT SIZING CHART [SEE SHEET E-003 FOR THREE LINE DIAGRAM]

TAG	CIRCUIT ORIGIN	CIRCUIT DESTINATION	CONDUCTOR SPECIFICATIONS				REQUIRED CONDUCTOR AMPACITY									CONDUCTOR TEMPERATURE DERATING						CONDUIT FILL DERATING		CORRECTED AMPACITY CALCULATION							AMPACITY CHECK		
			QTY IN PARALLEL & MATERIAL	TEMP RATING (°C)	TRADE SIZE	AMPACITY @ 30°C PER 310.16	Isc (AMPS) OR COMPONENT (AMPS)	X	#OF COMBINED PARALLEL STRINGS	X	MAX CURRENT 690.8 (A)(1)	X	CONT. OPERATION 690.8 (B)(1)	=	REQUIRED AMPACITY	CIRCUIT ENVIRONMENT	AMBIENT TEMP. (°C)	HGT. ABOVE ROOF (in)	TEMP. ADDER PER 310.15 (B)(2)(c)	OPERAT. TEMP. (°C)	AMPACITY CORRECTION 310.15 (B)(2)(a)	# OF UNGRND. COND.	AMPACITY CORRECTION 310.15 (B)(3)(a)	COND. AMPACITY	X	TEMP. DERATING	X	CONDUIT FILL DERATING	=	CORRECTED AMPACITY	REQUIRED AMPACITY	≤	CORRECTED AMPACITY
DC1	PV MODULE	DC/DC CONVERTER	(1) CU	90	#12 AWG	30	10.18	X	1	X	1.25	X	1.25	=	15.91	ROOFTOP	35	>7/8"	0	35	0.96	2	N/A	30	X	0.96	X	1.0	=	28.8	15.91	≤	28.8
DC2	DC/DC CONVERTER	JUNCTION BOX	(1) CU	90	#10 AWG	40	15	X	1	X	1	X	1.25	=	18.75	ROOFTOP	35	>7/8"	0	35	0.96	2	N/A	40	X	0.96	X	1.0	=	38.4	18.75	≤	38.4
DC3	JUNCTION BOX	INVERTER	(1) CU	90	#10 AWG	40	15	X	1	X	1	X	1.25	=	18.75	ROOFTOP	35	>7/8"	0	35	0.96	2	1.0	40	X	0.96	X	1.0	=	38.4	18.75	≤	38.4
DC4								X		X		X		=											X		X		=			≤	
DC5								X		X		X		=											X		X		=			≤	
DC6								X		X		X		=											X		X		=			≤	
DC7								X		X		X		=											X		X		=			≤	
DC8								X		X		X		=											X		X		=			≤	

SCOTT E WYSSLING LICENSE No. 81555 STATE OF FLORIDA PROFESSIONAL ENGINEER

Wyssling Consulting, PLLC
76 N Meadowbrook Drive Alpine UT 84004
Florida License # RY34912
Signed 5/31/2022

THIS PLAN HAS BEEN ELECTRONICALLY SIGNED AND SEALED BY SCOTT WYSSLING, PE USING A DIGITAL SIGNATURE AND DATE. PRINTED COPIES OF THIS DOCUMENT ARE NOT CONSIDERED SIGNED AND SEALED AND THE SIGNATURE MUST BE VERIFIED ON ANY ELECTRONIC COPIES

AC WIRE AND CONDUIT FILL DERATE CHART [SEE SHEET E-003 FOR THREE LINE DIAGRAM]

TAG	CIRCUIT ORIGIN	CIRCUIT DESTINATION	CONDUCTOR SPECIFICATIONS				REQUIRED CONDUCTOR AMPACITY					CONDUCTOR TEMPERATURE DERATING						CONDUIT FILL DERATING		CORRECTED AMPACITY CALCULATION							AMPACITY CHECK		
			QTY IN PARALLEL & MATERIAL	TEMP RATING (°C)	TRADE SIZE	AMPACITY @ 30°C PER 310.16	CONT. OPERATION 690.8 (B)(1)	X	MAX INV. OUTPUT CURRENT (AMPS) OR COMPONENT (AMPS)	=	REQUIRED AMPACITY	CIRCUIT ENVIRONMENT	AMBIENT TEMP. (°C)	HGT. ABOVE ROOF (in)	TEMP. ADDER PER 310.15 (B)(2)(c)	OPERAT. TEMP. (°C)	AMPACITY CORRECTION 310.15 (B)(2)(a)	# OF UNGRND. COND.	AMPACITY CORRECTION 310.15 (B)(3)(a)	COND. AMPACITY	X	TEMP. DERATING	X	CONDUIT FILL DERATING	=	CORRECTED AMPACITY	REQUIRED AMPACITY	≤	CORRECTED AMPACITY
AC1	INVERTER	AC DISCONNECT	(1) CU	75	#10 AWG	35	1.25	X	12.5	=	15.6	EXT WALL	35	N/A	0	35	0.94	3	1.0	35	X	0.94	X	1.0	=	32.9	15.6	≤	32.9
AC2	AC DISCONNECT	EXISTING SERVICE PANEL	(1) CU	75	#6 AWG	65	1.25	X	12.5	=	15.6	EXT WALL	35	N/A	0	35	0.94	3	1.0	65	X	0.94	X	1.0	=	61.1	15.6	≤	61.1
AC3								X		=											X		X		=			≤	
AC4								X		=											X		X		=			≤	
AC5								X		=											X		X		=			≤	
AC6								X		=											X		X		=			≤	
AC7								X		=											X		X		=			≤	
AC8								X		=											X		X		=			≤	
AC9								X		=											X		X		=			≤	
AC10								X		=											X		X		=			≤	

RELEASE | SUBMIT FOR PERMIT
DATE | 05/31/2022
REV

WIRE AND COND. CALCS.

E-002

3.300 kW PHOTOVOLTAIC PLANS

NAME: Larson, Carrie
ADDRESS: 2018 SW Fallon Ln
ADDRESS: Lake City, FL 32025
APN

Daybreak Install LLC
CVC56966
2100 N Main St Ste. 212
Fort Worth, TX 76164
(817) 501-4922

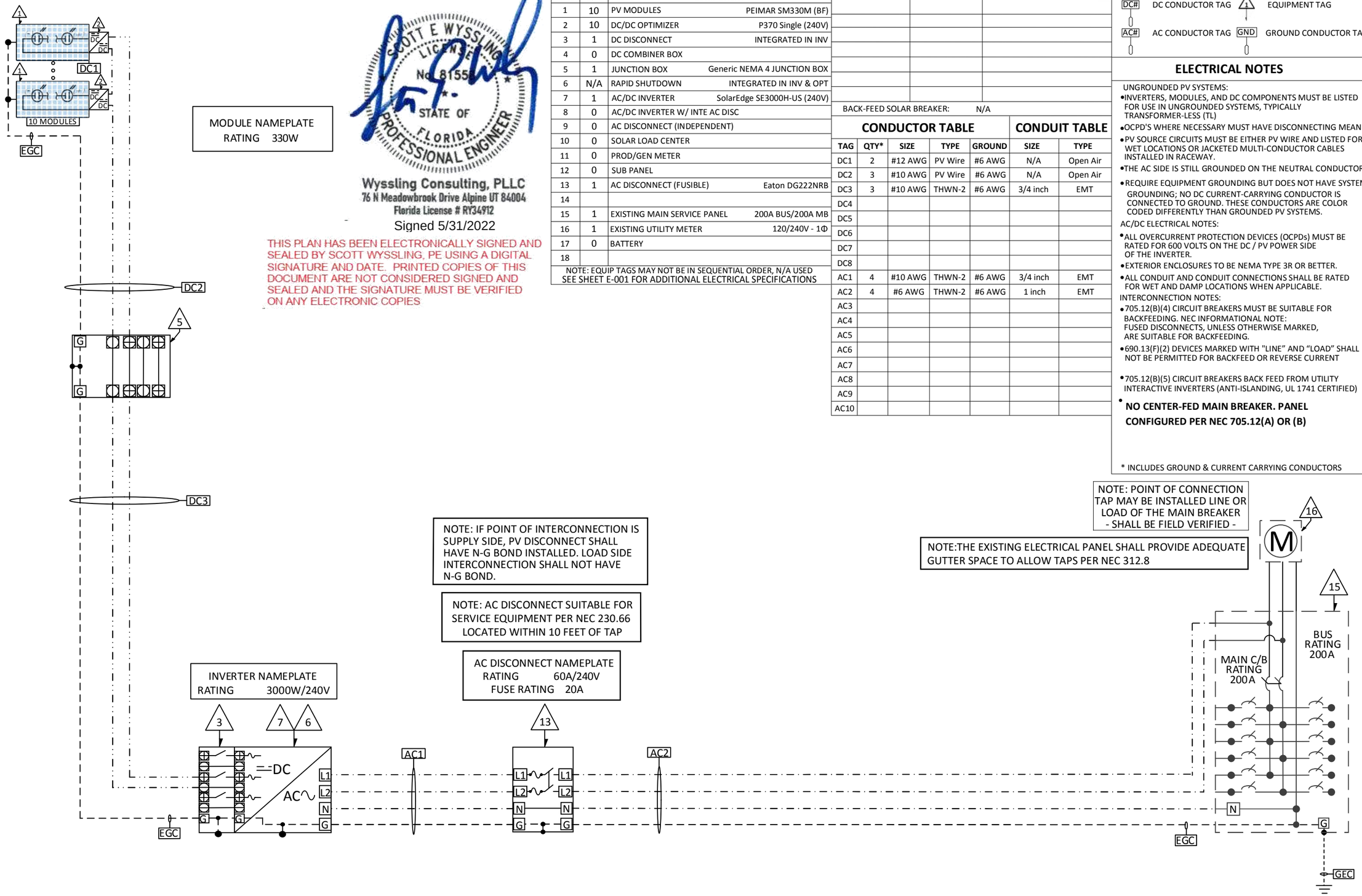

SCOTT E WYSSLING
LICENSE
No. 81555
STATE OF FLORIDA
PROFESSIONAL ENGINEER

Wyssling Consulting, PLLC
76 N Meadowbrook Drive Alpine UT 84004
Florida License # RY34912
Signed 5/31/2022

THIS PLAN HAS BEEN ELECTRONICALLY SIGNED AND SEALED BY SCOTT WYSSLING, PE USING A DIGITAL SIGNATURE AND DATE. PRINTED COPIES OF THIS DOCUMENT ARE NOT CONSIDERED SIGNED AND SEALED AND THE SIGNATURE MUST BE VERIFIED ON ANY ELECTRONIC COPIES

EQUIPMENT TABLE

TAG	QTY	COMPONENT	
1	10	PV MODULES	PEIMAR SM330M (BF)
2	10	DC/DC OPTIMIZER	P370 Single (240V)
3	1	DC DISCONNECT	INTEGRATED IN INV
4	0	DC COMBINER BOX	
5	1	JUNCTION BOX	Generic NEMA 4 JUNCTION BOX
6	N/A	RAPID SHUTDOWN	INTEGRATED IN INV & OPT
7	1	AC/DC INVERTER	SolarEdge SE3000H-US (240V)
8	0	AC/DC INVERTER W/ INTE AC DISC	
9	0	AC DISCONNECT (INDEPENDENT)	
10	0	SOLAR LOAD CENTER	
11	0	PROD/GEN METER	
12	0	SUB PANEL	
13	1	AC DISCONNECT (FUSIBLE)	Eaton DG222NRB
14			
15	1	EXISTING MAIN SERVICE PANEL	200A BUS/200A MB
16	1	EXISTING UTILITY METER	120/240V - 1Φ
17	0	BATTERY	
18			

NOTE: EQUIP TAGS MAY NOT BE IN SEQUENTIAL ORDER, N/A USED
SEE SHEET E-001 FOR ADDITIONAL ELECTRICAL SPECIFICATIONS

STRING	MODULE QTY	INVERTER #
1	10	INV 1

BACK-FEED SOLAR BREAKER: N/A

CONDUCTOR TABLE / CONDUIT TABLE

TAG	QTY*	SIZE	TYPE	GROUND	CONDUIT SIZE	CONDUIT TYPE
DC1	2	#12 AWG	PV Wire	#6 AWG	N/A	Open Air
DC2	3	#10 AWG	PV Wire	#6 AWG	N/A	Open Air
DC3	3	#10 AWG	THWN-2	#6 AWG	3/4 inch	EMT
DC4						
DC5						
DC6						
DC7						
DC8						
AC1	4	#10 AWG	THWN-2	#6 AWG	3/4 inch	EMT
AC2	4	#6 AWG	THWN-2	#6 AWG	1 inch	EMT
AC3						
AC4						
AC5						
AC6						
AC7						
AC8						
AC9						
AC10						

LEGEND

DC# — DC CONDUCTOR TAG
1 — EQUIPMENT TAG
AC# — AC CONDUCTOR TAG
GND — GROUND CONDUCTOR TAG

ELECTRICAL NOTES

UNGROUNDED PV SYSTEMS:
- INVERTERS, MODULES, AND DC COMPONENTS MUST BE LISTED FOR USE IN UNGROUNDED SYSTEMS, TYPICALLY TRANSFORMER-LESS (TL)
- OCPD'S WHERE NECESSARY MUST HAVE DISCONNECTING MEANS.
- PV SOURCE CIRCUITS MUST BE EITHER PV WIRE AND LISTED FOR WET LOCATIONS OR JACKETED MULTI-CONDUCTOR CABLES INSTALLED IN RACEWAY.
- THE AC SIDE IS STILL GROUNDED ON THE NEUTRAL CONDUCTOR.
- REQUIRE EQUIPMENT GROUNDING BUT DOES NOT HAVE SYSTEM GROUNDING; NO DC CURRENT-CARRYING CONDUCTOR IS CONNECTED TO GROUND. THESE CONDUCTORS ARE COLOR CODED DIFFERENTLY THAN GROUNDED PV SYSTEMS.

AC/DC ELECTRICAL NOTES:
- ALL OVERCURRENT PROTECTION DEVICES (OCPDs) MUST BE RATED FOR 600 VOLTS ON THE DC / PV POWER SIDE OF THE INVERTER.
- EXTERIOR ENCLOSURES TO BE NEMA TYPE 3R OR BETTER.
- ALL CONDUIT AND CONDUIT CONNECTIONS SHALL BE RATED FOR WET AND DAMP LOCATIONS WHEN APPLICABLE.

INTERCONNECTION NOTES:
- 705.12(B)(4) CIRCUIT BREAKERS MUST BE SUITABLE FOR BACKFEEDING. NEC INFORMATIONAL NOTE: FUSED DISCONNECTS, UNLESS OTHERWISE MARKED, ARE SUITABLE FOR BACKFEEDING.
- 690.13(F)(2) DEVICES MARKED WITH "LINE" AND "LOAD" SHALL NOT BE PERMITTED FOR BACKFEED OR REVERSE CURRENT
- 705.12(B)(5) CIRCUIT BREAKERS BACK FEED FROM UTILITY INTERACTIVE INVERTERS (ANTI-ISLANDING, UL 1741 CERTIFIED)
- **NO CENTER-FED MAIN BREAKER. PANEL CONFIGURED PER NEC 705.12(A) OR (B)**

* INCLUDES GROUND & CURRENT CARRYING CONDUCTORS

REV	DATE	RELEASE
	05/31/2022	SUBMIT FOR PERMIT

THREE LINE DIAGRAM

E-003

3.300 kW PHOTOVOLTAIC PLANS

NAME	Larson, Carrie
ADDRESS	2018 SW Fallon Ln
ADDRESS	Lake City, FL 32025
APN	

Daybreak Install LLC
CVC56966
2100 N Main St Ste. 212
Fort Worth, TX 76164
(817) 501-4922

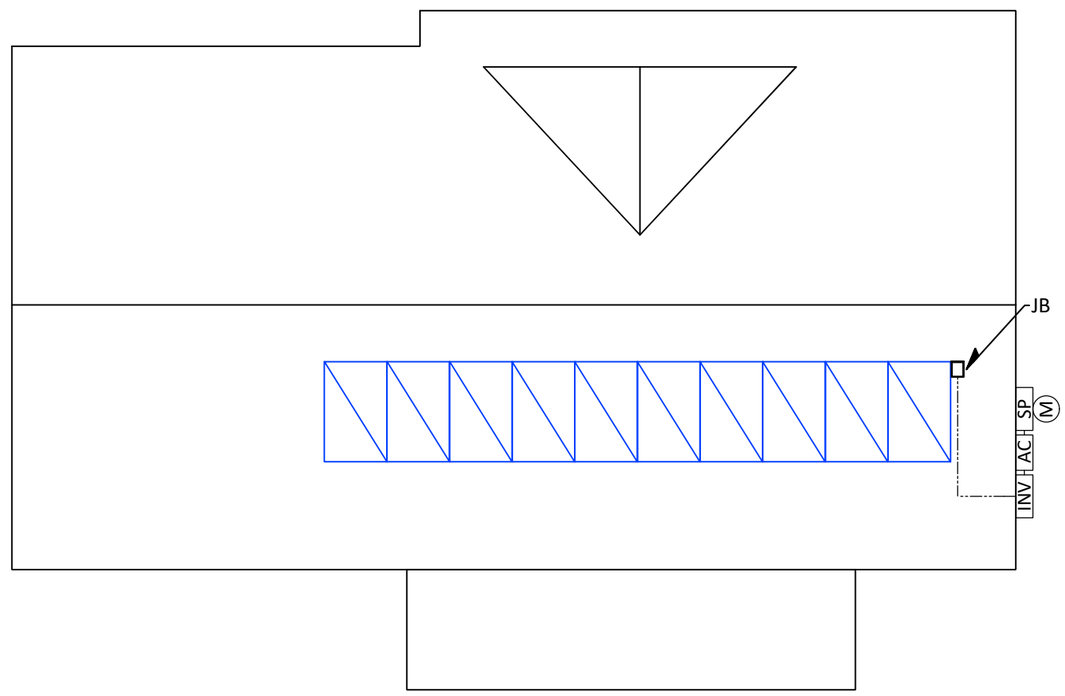

QTY 10 PEIMAR SM330M (BF) MODULES QTY 1 SolarEdge SE3000H-US (240V) INVERTER

EQUIPMENT GROUNDING

1. METAL PV MODULE FRAMES MUST BE CONNECTED TO THE EGC (EQUIPMENT GROUNDING CONDUCTOR).
   - 1.1. WEEBS MAY BE USED IN LIEU OF MODULE GROUND CLAMPS OR LUGS, WITH APPROVAL OF AHJ AND RACKING MFG. WEEBS ARE ONE TIME USE ONLY. SEE "we-llc.com" FOR RACKING SPECIFIC WEEB, INSTALL INSTRUCTIONS, AND UL 2703 CERT.
   - 1.2. FOR "LAY-IN" LUG MODULE GROUNDING; CORRECT HARDWARE OF PROPER METAL MATERIAL TO AVOID CORROSION MUST BE USED. TYPICALLY DIRECT BURIAL RATED, TINNED, OR STAINLESS STEEL. GROUNDING LUGS MUST BE ATTACHED AT MARKED LOCATION ON EACH MODULE.
2. THE EGC (EQUIPMENT GROUNDING CONDUCTOR) IS USED TO BOND ALL NON-CURRENT CARRYING CONDUCTORS AND EXPOSED METAL PARTS THAT MIGHT COME INTO CONTACT WITH CURRENT-CARRYING CONDUCTORS, INCLUDING THE FOLLOWING:
   - 2.1. PV MODULES FRAMES, ARRAY MOUNTING RACKING; THE METAL CHASSIS OF EQUIPMENT SUCH AS INVERTERS, DISCONNECTS, METERS, JUNCTION BOXES AND COMBINER BOXES; AND METAL CONDUIT HOLDING CIRCUITS > 250 VOLTS TO GROUND PER NEC 250.97
3. THE GEC (GROUNDING ELECTRODE CONDUCTOR) IS THE CONDUCTOR USED TO CONNECT THE GE OR GE SYSTEM TO THE SYSTEM GC, TO THE EGC, OR TO BOTH.
4. THE GE (GROUNDING ELECTRODE) IS A CONDUCTING OBJECT, OFTEN A ROD, RING, OR PLATE ESTABLISHING A DIRECT CONNECTION TO EARTH. THE AC SYSTEM GROUND IS EXISTING, USUALLY AT THE EXISTING MAIN PANEL AND/OR UTILITY METER. THE GROUND CAN ONLY OCCUR IN ONE PLACE AND MUST NOT BE DUPLICATED IN SUB-PANELS OR ANYWHERE ELSE ON AC SIDE.

ELECTRICAL SYMBOL LEGEND

CB	DC COMBINER BOX	ATF	AUTO TRANSFORMER
DCB	DC DISCONNECTING COMBINER BOX	SLC	SOLAR LOAD CENTER
		ACC	AC COMBINER
DC	DC DISCONNECT	BATT	BATTERY
INV#	DC/AC STRING INVERTER	AC	AC DISCONNECT
CLP	CRITICAL LOADS PANEL	SP	SERVICE PANEL
RSD	RAPID SHUTDOWN	P	PERFORMANCE METER
SUB	SUB-PANEL	M	UTILITY METER
EB	EMERGENCY BATTERY DISCONNECT	XFMR	TRANSFORMER
RS	EMERGENCY RSD SWITCH	JB	JUNCTION BOX
CBD	CIRCUIT BREAKER DISCONNECT	ATS	AUTO TRANSFER SWITCH
		STS	SMART TRANSFER SWITCH
		TGW	TESLA GATEWAY
		TPW	TESLA POWERWALL
		GEN	GENERATOR
			EXISTING EQUIPMENT

SECTION
1

PV ARRAY TAG
SECTION #
MODULE GROUP

PV AC DISCONNECT LOCATED ON ACCESSIBLE EXTERIOR WALL WITH EXTERNAL HANDLE VISIBLE, LOCKABLE & LABELED WITHIN 10 FEET OF THE METER.

THIS PLAN HAS BEEN ELECTRONICALLY SIGNED AND SEALED BY SCOTT WYSSLING, PE USING A DIGITAL SIGNATURE AND DATE. PRINTED COPIES OF THIS DOCUMENT ARE NOT CONSIDERED SIGNED AND SEALED AND THE SIGNATURE MUST BE VERIFIED ON ANY ELECTRONIC COPIES

SCOTT E WYSSLING LICENSED No. 81554 STATE OF FLORIDA PROFESSIONAL ENGINEER

Wyssling Consulting, PLLC
76 N Meadowbrook Drive Alpine UT 84004
Florida License # RY34912
Signed 5/31/2022

NORTH

SCALE: 1/8"= 1'0"@ SHEET SIZE A3

REV	DATE	RELEASE
	05/31/2022	SUBMIT FOR PERMIT

ELECTRICAL LAYOUT

E-100

3.300 kW PHOTOVOLTAIC PLANS

NAME	Larson, Carrie
ADDRESS	2018 SW Fallon Ln
ADDRESS	Lake City, FL 32025
APN	

Daybreak Install LLC
CVC56966
2100 N Main St Ste. 212
Fort Worth, TX 76164
(817) 501-4922

1 CONDUIT, RACEWAY, J-BOX, AND PULL BOXES

SCALE: 1/2" = 1'-0"

WARNING: PHOTOVOLTAIC POWER SOURCE

1. PLACE ON CONDUIT AND/OR RACE WAYS EVERY 10' (60"), 12" FROM BENDS, 12" ABOVE AND BELOW PENETRATIONS.
2. CODE REFERENCE: NEC 690.31(G)(3)
3. MINIMUM OF 1 1/8" x 5 3/4"
4. FONT: 3/8" AND .8 WIDTH FACTOR.
5. REFLECTIVE WHITE LETTERS ON A RED BACKGROUND.

2 DC DISCONNECTS

SCALE: 1/4" = 1'-0"

⚠WARNING

ELECTRICAL SHOCK HAZARD

TERMINALS ON THE LINE AND LOAD SIDES MAY BE ENGERGIZED IN THE OPEN POSITION

1. PLACED ON DC DISCONNECT(S) AND ON ANY EQUIPMENT THAT STAYS ENERGIZED IN THE OFF POSITION FROM THE PV SUPPLY.
2. CODE REFERENCE: NEC 690.13(B)
3. MINIMUM OF 3 1/2" x 10"
4. FONT: 3/8"
5. WARNING LABEL IS WHITE AND ORANGE

3 INVERTER(S)

SCALE: 1/4" = 1'-0"

⚠WARNING

THE DISCONNECTION OF THE GROUNDED CONDUCTOR(S) MAY RESULT IN OVERVOLTAGE ON THE EQUIPMENT

1. MINIMUM OF 3 1/2" x 10 1/2"
2. FONT: 3/8"
3. WARNING LABEL IS WHITE AND ORANGE

SHEET NOTES

CODE ABBREVIATIONS:
NATIONAL ELECTRICAL CODE (NEC)
INTERNATIONAL BUILDING CODE (IBC)
INTERNATIONAL RESIDENTIAL CODE (IRC)
INTERNATIONAL FIRE CODE (IFC)
UNDERWRITERS LABORATORY (UL)

1. COMBINATION PLACARDS MAY BE USED IN PLACE OF MULTIPLE PLACARDS FOR THE SAME DEVICE. ALL INFORMATION FROM THE MULTIPLE PLACARDS MUST BE PRESENT.
2. BLACK LETTERS WITH YELLOW BACKGROUND MAY BE USED IN PLACE OF THE STANDARD WHITE LETTERS WITH RED BACKGROUND WITH AHJ APPROVAL.
3. ALL INTERIOR AND EXTERIOR DC CONDUIT, ENCLOSURES, RACEWAYS, CABLE ASSEMBLIES, JUNCTION BOXES, COMBINER BOXES AND DISCONNECTS ARE MARKED. (NEC 690.31[G], NEC 690.13 & 690.53)
4. THE MARKINGS ON THE CONDUITS, RACEWAYS AND CABLE ASSEMBLIES ARE EVERY 10 FEET, WITHIN ONE FOOT OF ALL TURNS OR BENDS AND WITHIN ONE FOOT ABOVE AND BELOW ALL PENETRATIONS OF ROOF/CEILING ASSEMBLIES, WALLS AND BARRIERS. (IFC 605.11.1.4, NEC 690.31[G][3])
5. WHERE PV CIRCUITS ARE EMBEDDED IN BUILT-UP, LAMINATE OR MEMBRANE ROOFING MATERIALS IN ROOF AREAS NOT COVERED BY PV MODULES AND ASSOCIATED EQUIPMENT, THE LOCATION OF CIRCUITS SHALL BE CLEARLY MARKED.
6. REQUIRED LABELS SHALL BE PERMANENT AND SUITABLE FOR THE ENVIRONMENT. MATERIALS USED FOR MARKING MUST BE WEATHER RESISTANT. UL STANDARD IS RECOMMENDED TO DETERMINE WEATHER RATING. UL LISTING OF MARKINGS IS NOT REQUIRED. SEE UL LABELING SYSTEM 969 (UL 969)
7. MARKING CONTENT AND FORMAT:
   - 7.1. ARIAL OR SIMILAR FONT, NON-BOLD.
   - 7.2. MINIMUM 3/8" LETTER HEIGHT FOR HEADERS.
   - 7.3. MINIMUM 1/16" LETTER HEIGHT FOR DATA
   - 7.4. CONTRASTING BACKGROUND AND LETTERING.
   - 7.5. ALL CAPITAL LETTERS.
   - 7.6. CONTRASTING SPACE BETWEEN ROWS OF TEXT
   - 7.7. DIMENSIONS OF PLACARDS ARE APPROXIMATE. MAY BE REDUCED AND / OR INCREASED TO UL APPROVED MANUFACTURED PRODUCT

4 NON-LOAD BREAK DC COMBINER / J-BOX

SCALE: 1/2" = 1'-0"

DO NOT OPEN UNDER LOAD

1. CODE REFERENCE: NEC 690.13(C)
2. USE ON NON-LOAD BREAK RATED DISCONNECTION.
3. MINIMUM OF 1" x 6"
4. FONT: 3/8" AND .8 WIDTH FACTOR
5. WHITE LETTERS ON A RED BACKGROUND.

DO NOT DISCONNECT UNDER LOAD

5 DC COMBINER BOX

SCALE: 1/2" = 1'-0"

DC COMBINER BOX

COMBINER # 1

1. USE PLACARD "COMBINER # 1" WHEN MORE THAN 1 DC COMBINER IS USED. NUMBER ACCORDING TO THREE LINE DIAGRAM AND CALCULATIONS.
2. MINIMUM OF 1" x 4"
3. FONT: 3/8" AND .75 TO .8 WIDTH FACTOR
4. WHITE LETTERS ON A RED BACKGROUND.

6 SWITCHBOARDS

SCALE: 1/2" = 1'-0"

⚠WARNING

ARC FLASH HAZARD
APPROPRIATE PPE REQUIRED
FAILURE TO COMPLY CAN RESULT IN DEATH OR INJURY
REFER TO NFPA 70E

1. VERIFY WHICH PLACARD IS REQUIRED WITH AHJ.
2. MINIMUM OF 1" x 4"
3. FONT: 3/8" AND .8 WIDTH FACTOR
4. WARNING LABEL IS WHITE AND ORANGE
5. DATA COLLECTED FROM AS-BUILT INFO, PRIOR TO PTO, BY OTHERS.

7 MAIN SERVICE PANEL

SCALE: 1/4" = 1'-0"

1. LOCATE NO MORE THAN 1 m FROM THE SERVICE DISCONNT MEANS TO WHICH THE PV SYSTEMS ARE CONNECTED AND SHALL INDICATE THE LOCATION OF ALL IDENTIFIED RAPID SHUTDOWN SWITCHES IF NOT AT THE SAME LOCATION.

SOLAR PV SYSTEM EQUIPPED WITH RAPID SHUTDOWN

TURN RAPID SHUTDOWN SWITCH TO THE "OFF" POSITION TO SHUT DOWN PV SYSTEM AND REDUCE SHOCK HAZARD IN THE ARRAY.

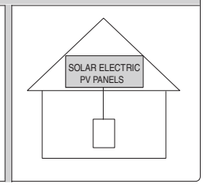

2. CODE REFERENCE: NEC 690.56(C)(1)(a)
3. TITLE: MIN. 3/8" BLACK CHARACTERS ON YELLOW BACKGROUND, REMAINING CHARACTERS MIN. 3/16" IN BLACK ON WHITE BACKGROUND.

8 AC AND DC DISCONNECTS

SCALE: 1/4" = 1'-0"

AC DISCONNECT # 1

DC DISCONNECT # 1

USE PLACARD "[AC][DC] DISCONNECT # 1" WHEN MORE THAN ONE DISCONNECT IS USED. NUMBER ACCORDING TO THREE LINE DIAGRAM AND CALCULATIONS.

PHOTOVOLTAIC	PHOTOVOLTAIC
DC DISCONNECT	AC DISCONNECT

1. PLACE ON ALL AC AND DC DISCONNECTS
2. CODE REFERENCE: NEC 690.13(B)
3. MINIMUM OF 1" x 10 1/2"
4. FONT: 3/8"
5. WHITE LETTERS ON A RED BACKGROUND.

9 J-BOX, DC COMBINER, AND DC DISCONNECT

SCALE: 1/4" = 1'-0"

⚠WARNING

ELECTRICAL SHOCK HAZARD

TERMINALS ON THE LINE AND LOAD SIDES MAY BE ENGERGIZED IN THE OPEN POSITION

DC VOLTAGE IS ALWAYS PRESENT WHEN SOLAR MODULES ARE EXPOSED TO SUNLIGHT

1. ONLY FOR UNGROUNDED SYSTEMS.
2. PLACED ON ALL ENCLOSURES WITH UNGROUNDED CIRCUITS OR DEVICES WHICH ARE ENERGIZED AND MAY BE EXPOSED DURING SERVICE.
3. MINIMUM OF 3" x 10 1/2"
4. FONT: 3/8"
5. WARNING LABEL IS WHITE AND ORANGE

10 INVERTER(S)

SCALE: 1/2" = 1'-0"

INVERTER # 1

1. USE PLACARD "INVERTER # 1" WHEN MORE THAN 1 INVERTER IS USED. NUMBER ACCORDING TO THREE LINE DIAGRAM AND CALCULATIONS.
2. MINIMUM OF 1" x 4"
3. FONT: 3/8"
4. WHITE LETTERS ON A RED BACKGROUND.

11 RAPID SHUTDOWN SWITCH

SCALE: 1/4" = 1'-0"

1. A RAPID SHUTDOWN SWITCH SHALL HAVE A LABEL LOCATED ON OR NO MORE THAN 1M (3 FT) FROM THE SWITCH THAT INCLUDES THE FOLLOWING:

RAPID SHUTDOWN SWITCH FOR SOLAR PV SYSTEM

2. THE LABEL SHALL BE REFLECTIVE WITH ALL LETTERS CAPITALIZED AND HAVING A MINIMUM HEIGHT OF 9.5 MM (3⁄8 IN.), IN WHITE ON RED BACKGROUND.

THIS PLAN HAS BEEN ELECTRONICALLY SIGNED AND SEALED BY SCOTT WYSSLING, PE USING A DIGITAL SIGNATURE AND DATE. PRINTED COPIES OF THIS DOCUMENT ARE NOT CONSIDERED SIGNED AND SEALED AND THE SIGNATURE MUST BE VERIFIED ON ANY ELECTRONIC COPIES

ENGINEERING STAMP (if appl.)

SCOTT E WYSSLING LICENSE No. 81551 STATE OF FLORIDA PROFESSIONAL ENGINEER

Wyssling Consulting, PLLC
76 N Meadowbrook Drive Alpine UT 84004
Florida License # RY34912
Signed 5/31/2022

QTY 10 PEIMAR SM330M (BF) MODULES QTY 1 SolarEdge SE3000H-US (240V) INVERTER

REV	DATE	RELEASE
	05/31/2022	SUBMIT FOR PERMIT

STANDARD PLACARDS

P-001

3.300 kW PHOTOVOLTAIC PLANS

NAME: Larson, Carrie
ADDRESS: 2018 SW Fallon Ln
ADDRESS: Lake City, FL 32025
APN

Daybreak Install LLC
CVC56966
2100 N Main St Ste. 212
Fort Worth, TX 76164
(817) 501-4922

1 DC DISCONNECTS & DISCO. COMBINER

SCALE: 1/4" = 1'-0"

PV SYSTEM DC DISCONNECT
MAXIMUM CIRCUIT CURRENT 15.0 ADC
MAXIMUM VOLTAGE 480 VDC
#1
PHOTOVOLTAIC SYSTEM
DC DISCONNECT
MAX. CIRCUIT CURRENT 15.0 ADC
MAXIMUM VOLTAGE 480 VDC

PV SYSTEM DC DISCONNECT
MAXIMUM CIRCUIT CURRENT ADC
MAXIMUM VOLTAGE VDC
#2
PHOTOVOLTAIC SYSTEM
DC DISCONNECT
MAX. CIRCUIT CURRENT ADC
MAXIMUM VOLTAGE VDC

PV SYSTEM DC DISCONNECT
MAXIMUM CIRCUIT CURRENT ADC
MAXIMUM VOLTAGE VDC
#3
PHOTOVOLTAIC SYSTEM
DC DISCONNECT
MAX. CIRCUIT CURRENT ADC
MAXIMUM VOLTAGE VDC

1. PLACARD PLACED ON EACH DISCONNECT, IF MORE THAN ONE PRESENT.
2. VALUES MUST MATCH EQUIPMENT CALCULATIONS.
   SEE SHEET "E-001 / DC DISCONNECT [#]"
3. CODE REFERENCE: NEC 690.53
4. MINIMUM OF 2 1/2" x 8" OR 5" x 2 1/2" RESPECTIVELY.
5. FONT: 3/8" HEADER, 3/16" DATA
6. WHITE LETTERS ON A RED BACKGROUND.
7. IN SOME CASES TWO LABELS MAY BE REQUIRED. AN INVERTER WITH INTEGRATED DC DISCONNECT UTILIZING TWO MPPT TRACKERS; IF CONFIGURATION USES DIFFERENT MODULES.

2 AC DISCONNECT, AC SUB-PANEL

SCALE: 1/4" = 1'-0"

AC DISCONNECT #1 - INDEPENDENT/ SEPARATE

PV SYSTEM AC DISCONNECT
RATED AC OUTPUT CURRENT 12.5 AMPS
AC NORMAL OPERATING VOLTAGE 240 VOLTS

PHOTOVOLTAIC SYSTEM
AC DISCONNECT
RATED AC OUTPUT CURRENT 12.5 AMPS
AC NORMAL OPERATING VOLTAGE 240 VOLTS

STRING INVERTER #1 - INTEGRATED AC DISCONNECT

PV SYSTEM AC DISCONNECT
RATED AC OUTPUT CURRENT 12.5 AMPS
AC NORMAL OPERATING VOLTAGE 240 VOLTS

PHOTOVOLTAIC SYSTEM
AC DISCONNECT
RATED AC OUTPUT CURRENT 12.5 AMPS
AC NORMAL OPERATING VOLTAGE 240 VOLTS

STRING INVERTER #2 - INTEGRATED AC DISCONNECT

PV SYSTEM AC DISCONNECT
RATED AC OUTPUT CURRENT AMPS
AC NORMAL OPERATING VOLTAGE VOLTS

PHOTOVOLTAIC SYSTEM
AC DISCONNECT
RATED AC OUTPUT CURRENT AMPS
AC NORMAL OPERATING VOLTAGE VOLTS

AC SUB-PANEL #1

PV SYSTEM AC DISCONNECT
RATED AC OUTPUT CURRENT AMPS
AC NORMAL OPERATING VOLTAGE VOLTS

PHOTOVOLTAIC SYSTEM
AC DISCONNECT
RATED AC OUTPUT CURRENT AMPS
AC NORMAL OPERATING VOLTAGE VOLTS

SOLAR LOAD CENTER

PV SYSTEM AC DISCONNECT
RATED AC OUTPUT CURRENT AMPS
AC NORMAL OPERATING VOLTAGE VOLTS

PHOTOVOLTAIC SYSTEM
AC DISCONNECT
RATED AC OUTPUT CURRENT AMPS
AC NORMAL OPERATING VOLTAGE VOLTS

1. PLACARD PLACED ON EACH SOLAR SYSTEM DISCONNECTING COMPONENT.
2. VALUES MUST MATCH EQUIPMENT CALCULATIONS.
   SEE SHEET "E-001 / AC DISCONNECT [#]"
3. CODE REFERENCE: NEC 690.54
4. MINIMUM OF 1 1/2" x 8 1/2" OR 1 3/4" x 6 1/2" RESPECTIVELY.
5. FONT: 3/8" HEADER, 3/16" DATA
6. WHITE LETTERS ON A RED BACKGROUND.

3 UTILITY METER, SERVICE PANEL, SUB-PANEL

SCALE: 1/4" = 1'-0"

WARNING
DUAL POWER SOURCES
RATED AC OUTPUT CURRENT 12.5 AMPS
AC NORMAL OPERATING VOLTAGE 240 VOLTS
#1

BUILDING CONTAINS TWO SOURCES OF POWER: UTILITY, SOLAR PV UTILITY SERVICE DISCONNECT LOCATED BELOW. SOLAR PV SYSTEM DISCONNECT LOCATED [N/E/S/W] WALL OF BUILDING
#2

BUILDING CONTAINS TWO SOURCES OF POWER: UTILITY, SOLAR PV UTILITY SERVICE DISCONNECT LOCATED BELOW. SOLAR PV SYSTEM DISCONNECT LOCATED [N/E/S/W] WALL OF BUILDING
#3

1. (#1) PLACARD PLACED AT MAIN UTILITY SERVICE DISCONNECT/BREAKER AND PV SYSTEM SUPPLY BREAKER AT POINT OF INTERCONNECTION. (#2 & #3) PLACARD(S) REQUIRED WITH #1 PLACARD WHEN UTILITY SERVICE AND PV SYSTEM DISCONNECT(S) ARE NOT LOCATED NEXT TO EACH OTHER. MAP PLACARD REQUIRED AS SPECIFIED.
2. VALUES MUST MATCH EQUIPMENT CALCULATIONS.
   2.1. VALUES WILL MATCH LOAD CENTER OR SUB-PANEL VALUES IF INSTALLED AFTER INVERTERS. IF AC CONNECTION TO SERVICE PANEL COMES FROM INVERTERS; SEE SHEET "E-001 / STRING INVERTER[#] SPECIFICATIONS".
   2.1.1. INVERTERS ARE PARALLEL CONNECTIONS.
   2.1.2. "RATED AC OUTPUT CURRENT" WILL BE THE SUM OF THE INVERTERS
   2.1.3. "AC NORMAL OPERATING VOLTAGE" WILL BE THE NAME PLATE RATING OF THE INVERTER
3. CODE REFERENCE: NEC 690.54, NEC 705.12(B)(3)
4. MINIMUM OF 2" x 6 1/2" (#1), VARIES (#2 & #3)
5. FONT: 3/8" HEADER, 3/16" DATA (#1), 1/4" (#2 & #3)
6. WHITE LETTERS ON A RED BACKGROUND.

SHEET NOTES

CODE ABBREVIATIONS:
NATIONAL ELECTRICAL CODE (NEC)
INTERNATIONAL BUILDING CODE (IBC)
INTERNATIONAL RESIDENTIAL CODE (IRC)
INTERNATIONAL FIRE CODE (IFC)
UNDERWRITERS LABORATORY (UL)

1. COMBINATION PLACARDS MAY BE USED IN PLACE OF MULTIPLE PLACARDS FOR THE SAME DEVICE. ALL INFORMATION FROM THE MULTIPLE PLACARDS MUST BE PRESENT.
2. BLACK LETTERS WITH YELLOW BACKGROUND MAY BE USED IN PLACE OF THE STANDARD WHITE LETTERS WITH RED BACKGROUND WITH AHJ APPROVAL.
3. ALL INTERIOR AND EXTERIOR DC CONDUIT, ENCLOSURES, RACEWAYS, CABLE ASSEMBLIES, JUNCTION BOXES, COMBINER BOXES AND DISCONNECTS ARE MARKED. (NEC 690.31[E][3], NEC 690.31[E][4] & 690.53)
4. REQUIRED LABELS SHALL BE PERMANENT AND SUITABLE FOR THE ENVIRONMENT. MATERIALS USED FOR MARKING MUST BE WEATHER RESISTANT. UL STANDARD IS RECOMMENDED TO DETERMINE WEATHER RATING. UL LISTING OF MARKINGS IS NOT REQUIRED. SEE UL LABELING SYSTEM 969 (UL 969)
5. MARKING CONTENT AND FORMAT:
   5.1. ARIAL OR SIMILAR FONT, NON-BOLD.
   5.2. MINIMUM 3/8" LETTER HEIGHT FOR HEADERS.
   5.3. MINIMUM 1/16" LETTER HEIGHT FOR DATA
   5.4. CONTRASTING BACKGROUND AND LETTERING.
   5.5. ALL CAPITAL LETTERS.
   5.6. CONTRASTING SPACE BETWEEN ROWS OF TEXT
   5.7. DIMENSIONS OF PLACARDS ARE APPROXIMATE. MAY BE REDUCED AND / OR INCREASED TO UL APPROVED MANUFACTURED PRODUCT
6. ANSI Z535.4 PRODUCT SAFETY SIGNS AND LABELS: THIS INFORMATIONAL NOTE AND ITS REQUIREMENTS FOR PLACARDS MAY BE USED WITH PRIOR APPROVAL OF THE AHJ. MOST NOTABLE DIFFERENCES IS COLOR OF PLACARDS AND USE OF HAND WRITTEN VALUES WITH INDUSTRIAL MARKERS ON STANDARD PLACARDS WHERE THE VALUE MAY CHANGE AT A FUTURE DATE. I.E. ADDING MODULES AT A FUTURE DATE, OR STANDARD PLACARD MANUFACTURER INSTALLED ON ELECTRICAL COMPONENT. AHJ APPROVAL REQUIRED. (SEE NOTE #1 FOR INDIVIDUAL PLACARDS)

4 MAP PLACARD: MAIN SERVICE PANEL AND PV INVERTER (IF NOT SAME LOCATION)

SCALE: 1/2" = 1'-0"

(WITH COMBINED WARNING PLACARD IF REQUIRED. EXAMPLE: LADWP)

CAUTION
POWER TO THIS BUILDING IS SUPPLIED FROM THE FOLLOWING SOURCES WITH DISCONNECTS LOCATED AS SHOWN:

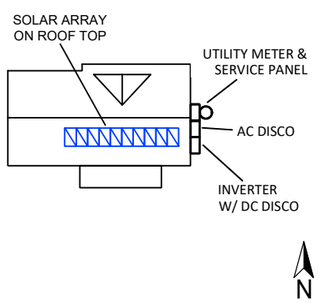

WARNING
ELECTRIC SHOCK HAZARD - DO NOT TOUCH TERMINALS
TERMINALS ON BOTH THE LINE AND LOAD SIDES MAY BE ENERGIZED IN THE OPEN POSITION

1. PLACARD PLACED AT ELECTRICAL SERVICE AND AT THE PV INVERTER AND PV DISCONNECTS IF NOT AT THE SAME LOCATION.
2. MAP PLACARD PROVIDES A DIRECTORY OF THE SERVICE DISCONNECTING MEANS AND PHOTOVOLTAIC SYSTEM DISCONNECTION MEANS.
3. CODE REFERENCE: NEC 690.56(A)(B), 705.10
4. WHITE LETTERS ON A RED BACKGROUND.
5. MINIMUM OF 7 3/4" x 5"
6. FONT: 3/4" "CAUTION", 1/4" "WARNING", 3/16" HEADER, 1/8" DATA AND NOTES
7. PLACARD WILL BE PLACED ADJACENT TO THE MAIN SERVICE DISCONNECT IN A LOCATION CLEARLY VISIBLE FROM WHERE THE DISCONNECT IS OPERATED. (IFC 605.11.1.3)

5 MAP PLACARD: MAIN SERVICE PANEL AND PV INVERTER (IF NOT SAME LOCATION)

SCALE: 1/2" = 1'-0"

CAUTION
POWER TO THIS BUILDING IS SUPPLIED FROM THE FOLLOWING SOURCES WITH DISCONNECTS LOCATED AS SHOWN:

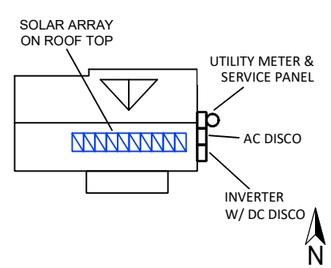

1. PLACARD PLACED AT ELECTRICAL SERVICE AND AT THE PV INVERTER AND PV DISCONNECTS IF NOT AT THE SAME LOCATION.
2. MAP PLACARD PROVIDES A DIRECTORY OF THE SERVICE DISCONNECTING MEANS AND PHOTOVOLTAIC SYSTEM DISCONNECTION MEANS.
3. CODE REFERENCE: NEC 690.56(A)(B), 705.10
4. WHITE LETTERS ON A RED BACKGROUND.
5. MINIMUM OF 6 1/2" x 6 1/2"
6. FONT: 3/4" "CAUTION", 1/4" HEADER, 1/8" DATA AND NOTES
7. PLACARD WILL BE PLACED ADJACENT TO THE MAIN SERVICE DISCONNECT IN A LOCATION CLEARLY VISIBLE FROM WHERE THE DISCONNECT IS OPERATED. (IFC 605.11.1.3)

THIS PLAN HAS BEEN ELECTRONICALLY SIGNED AND SEALED BY SCOTT WYSSLING, PE USING A DIGITAL SIGNATURE AND DATE. PRINTED COPIES OF THIS DOCUMENT ARE NOT CONSIDERED SIGNED AND SEALED AND THE SIGNATURE MUST BE VERIFIED ON ANY ELECTRONIC COPIES

SCOTT E WYSSLING
LICENSE
No. 81555
STATE OF
FLORIDA
PROFESSIONAL ENGINEER

Wyssling Consulting, PLLC
76 N Meadowbrook Drive Alpine UT 84004
Florida License # RY34912
Signed 5/31/2022

RESPONSIBILITY NOTES

1. PRIME CONTRACTOR / PERMIT APPLICANT SIGNER IS RESPONSIBLE FOR THE DESIGN AND SPECIFICATIONS OF THE PHOTOVOLTAIC SYSTEM INSTALLATION. PRIME CONTRACTOR / PERMIT APPLICANT SIGNER WILL BE RESPONSIBLE FOR COLLECTION OF EXISTING ONSITE INFORMATION REQUIREMENTS TO DESIGN, SPECIFY, AND INSTALL THE EXTERIOR MOUNTED PORTION OF THE PHOTOVOLTAIC SYSTEM DETAILED IN THIS DOCUMENT.
2. ADVANCED SOLAR SOLUTIONS, INC IS RESPONSIBLE FOR APPLYING SUPPLIED INFORMATION INTO A SET OF PERMIT DRAWINGS. ANY CHANGES TO DRAWINGS ARE SUBJECT TO CONTRACT CONDITIONS BETWEEN THE CLIENT AND ADVANCED SOLAR SOLUTIONS, INC. IN ACCORDANCE WITH THE REQUIREMENTS OF THE AHJ.

REV	DATE	RELEASE
	05/31/2022	SUBMIT FOR PERMIT

DYNAMIC PLACARDS

P-002

3.300 kW PHOTOVOLTAIC PLANS

NAME	Larson, Carrie
ADDRESS	2018 SW Fallon Ln
ADDRESS	Lake City, FL 32025
APN	

Daybreak Install LLC
CVC56966
2100 N Main St Ste. 212
Fort Worth, TX 76164
(817) 501-4922

PV MODULE CUT SHEET

PEIMAR
ITALIAN PHOTOVOLTAIC MODULES

SM330M (BF)

60-CELL LINE

MADE IN ITALY MODULE

Peimar monocrystalline solar panels, produced using a combination of innovative production processes and advanced engineering techniques, provide custom ers with maximum output and super high performance.
This allows fewer panels to be used to generate more energy, ideal if space is restricted or environmental conditions are challenging. Modern design , using matching black cells and frames and a very long lifespan ensure this monocrystalline are a great option.

30 YEAR LINEAR POWER WARRANTY
20 YEAR PRODUCT WARRANTY

PERC TECHNOLOGY

MODULE FIRE PERFORMANCE: **CLASS 1**

ANTI-REFLECTIVE GLASS

QBE INSURANCE
Product Liability Insurance QBE

CELLS

60 CELLS
MONO 5BB / 9BB M3 | ***PERC***

158.75x158.75mm / 6.25x6.25"

FRAME

COMPACT AND STURDY | ***40mm***

ANCHORABLE ALSO ON THE SHORT SIDE [5]

www.peimar.com

60-CELL LINE

ELECTRICAL CHARACTERISTICS (STC) [1]

	SM330M (BF)
Nominal Output (Pmax) [2]	330 W
Sorting Tolerance	0/+5 W
Voltage at Pmax (Vmp)	34.35 V
Current at Pmax (Imp)	9.61 A
Open Circuit Voltage (Voc) [2]	41.91 V
Short Circuit Current (Isc) [2]	10.18 A
Maximum System Voltage	1500 V
Maximum Series Fuse Rating	15 A
Module Efficiency	19.78%
Protection class against electric shock	Class II

MECHANICAL CHARACTERISTICS

Solar Cells	60 (6x10) M3 monocrystalline ***PERC***
Solar Cells Size	158.75x158.75 mm / 6.25x6.25"
Front Cover	3.2 mm / 0.13" thick, low iron tempered glass
Back Cover	TPT (Tedlar-PET-Tedlar)
Encapsulant	EVA (Ethylene vinyl acetate)
Frame	Anodized aluminium alloy, double wall
Frame finishing	Black
Backsheet finishing	White
Diodes	3 Bypass diodes serviceable
Junction Box	IP67 rated
Connector	MC4 or compatible connector
Cables Lenght	900 mm / 35.43"
Cables Section	4.0 mm² / 0,006 in²
Dimensions	1665x1002x40 mm / 65.55x39.45x1.57"
Weight	18.6 Kg / 41.01 lbs
Max Load (Test Load) - SF	5400 Pa - 1.5 [5]

TEMPERATURE CHARACTERISTICS

NMOT [3]	45±2 °C
Temperature Coefficient of Pmax	-0.37 %/°C
Temperature Coefficient of Voc	-0.28 %/°C
Temperature Coefficient of Isc	0.042 %/°C
Operating Temperature	-40 °C ~ +85°C

PACKAGING [4]

Pallet dimensions	1720x1200x1210 mm / 67.72x47.24x47.64"
Pieces per pallet	27
Weight	535 Kg / 1179 lbs

CERTIFICATIONS

Fire Resistance Rating	Class of reaction to fire: 1 (UNI 9177)
Fire Performance Rating	Type 1 (UL 61730:2017)
Product Certificate	UL 61730:2017

DIMENSIONS

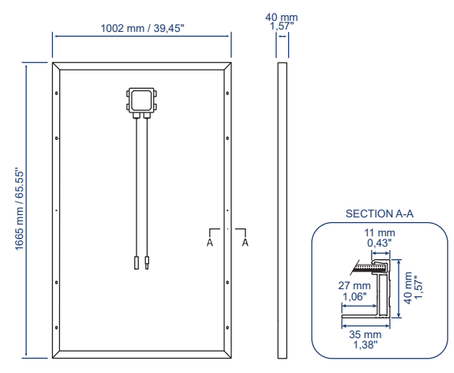

CURRENT/VOLTAGE CHARACTERISTICS

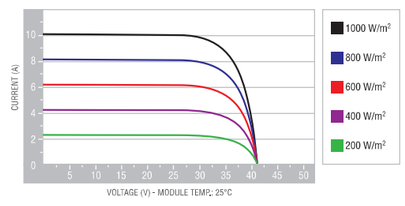

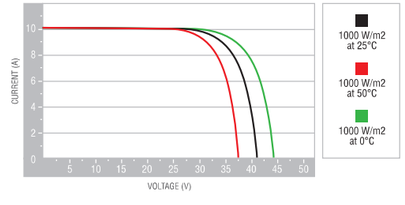

1. STC: (Standard Test Condition) Irradiance 1000W/m²; Module Temperature 25°C; Air Mass 1.5
2. Pmax, Voc, Isc measurement tolerance: ±3%
3. NMOT: Nominal Module Operating Temperature: Irradiance 800W/m²; Air 20°C; Wind speed 1m/s
4. Pallets can be stacked up to two
5. Consult the installation manual for the relative mounting configura tions

It is important to point out, that all technical specifications, infor mation and figures contained in this datasheet are estimated values. Peimar reserves the right to change the technical specifications, information and figures contained in this document at any time without notice.
USA_2021_06_00

PEIMAR
ITALIAN PHOTOVOLTAIC MODULES

REV	DATE	RELEASE
	05/31/2022	SUBMIT FOR PERMIT

R-100

EQUIP. CUT SHEETS

3.300 kW PHOTOVOLTAIC PLANS

NAME	Larson, Carrie
ADDRESS	2018 SW Fallon Ln
ADDRESS	Lake City, FL 32025
APN	

Daybreak Install LLC
CVC56966
2100 N Main St Ste. 212
Fort Worth, TX 76164
(817) 501-4922

Certificate of Compliance

Certificate: 80042800 **Master Contract:** 274817

Project: 80042800 **Date Issued:** 2020-11-03

Issued To: **Peimar Inc**
309 Fellowship Road, Suite 115
East Gate Center
Mount Laurel, New Jersey, 08054
United States

Attention: Stefano Caruso

The products listed below are eligible to bear the CSA Mark shown with adjacent indicators 'C' and 'US' for Canada and US or with adjacent indicator 'US' for US only or without either indicator for Canada only.

Issued by: Michael Hoffnagle
Michael Hoffnagle

C US

PRODUCTS

CLASS 5311 10 - POWER SUPPLIES - Photovoltaic Modules and Panels
CLASS 5311 90 - POWER SUPPLIES - Photovoltaic Modules and Panels (Certified to U.S. Standards)

 © 2018 CSA Group. All rights reserved.

Certificate: 80042800
Project: 80042800

Master Contract: 274817
Date Issued: 2020-11-03

- Model SMXXXM Series, mono-crystalline silicon, 72 Cell, where xxx is the power output from 405 W to 340 W.

Model	Rated Max @ STC (Watts)	Voltage at Rated @ Max Power (V)	Current at Rated Max Power @ STC (A)	Open Circuit Voltage @ STC (A)	Short Circuit Current @ STC (A)
	(Pmax)	(Vmp)	(Imp)	(Voc)	(Isc)
SM405M	405	41.5	9.76	50.63	10.34
SM400M	400	41.3	9.69	50.39	10.26
SM395M	395	41.1	9.61	50.14	10.18
SM390M	390	40.9	9.54	49.9	10.1
SM385M	385	40.7	9.46	49.66	10.02
SM380M	380	40.5	9.39	49.41	9.94
SM375M	375	40.3	9.31	49.17	9.86
SM370M	370	40.1	9.24	48.92	9.78
SM365M	365	39.9	9.16	48.68	9.7
SM360M	360	39.7	9.09	48.44	9.62
SM355M	355	39.5	9.01	48.19	9.54
SM350M	350	39.3	8.94	47.95	9.46
SM345M	345	39.1	8.86	47.70	9.38
SM340M	340	38.9	8.79	47.46	9.3
Max Series Fuse Rating (A)	15				
Max System Voltage (V)	1500				
Fire Performance Rating	Type 1				

- Model SMXXXM Series, mono-crystalline silicon, 60 Cell, where xxx is the power output from 340 W to 290 W.

Model	Rated Max @ STC (Watts)	Voltage at Rated @ Max Power (V)	Current at Rated Max Power @ STC (A)	Open Circuit Voltage @ STC (A)	Short Circuit Current @ STC (A)
	(Pmax)	(Vmp)	(Imp)	(Voc)	(Isc)
SM340M	340	34.75	9.79	42.39	10.37
SM335M	335	34.55	9.7	42.16	10.27
SM330M	330	34.35	9.61	41.91	10.18
SM325M	325	34.15	9.52	41.67	10.08
SM320M	320	33.95	9.43	41.42	9.98

 © 2018 CSA Group. All rights reserved.

REV	DATE	RELEASE
	05/31/2022	SUBMIT FOR PERMIT

EQUIP. CUT SHEETS

R-101

3.300 kW PHOTOVOLTAIC PLANS

NAME	Larson, Carrie
ADDRESS	2018 SW Fallon Ln
ADDRESS	Lake City, FL 32025
APN	

Daybreak Install LLC
CVC56966
2100 N Main St Ste. 212
Fort Worth, TX 76164
(817) 501-4922

Certificate: 80042800
Project: 80042800

Master Contract: 274817
Date Issued: 2020-11-03

SM315M	315	33.75	9.34	41.18	9.89
SM305M	305	33.55	9.25	40.94	9.79
SM300M	300	33.35	9.16	40.70	9.69
SM295M	295	33.15	9.07	40.45	9.59
SM290M	290	32.95	8.98	40.21	9.50
Max Series Fuse Rating (A)	15				
Max System Voltage (V)	1500				
Fire Performance Rating	Type 1				

Design Load: 3600 Pa
Test Load: 5400 Pa

Notes:
1. Rated electrical characteristics are within +/-10% of measured values at Standard Test Conditions of 100 mW/cm2 irradiance, AM 1.5 spectrum, and 25ºC.
2. 1500V maximum system voltage can only be used with 1500V rated components (Junction box, connector and cable)

APPLICABLE REQUIREMENTS

CAN/CSA-C22.2 No. 61730-1:19	Photovoltaic (PV) module safety qualification - Part 1: Requirements for construction
CAN/CSA-C22.2 No. 61730-2:19	Photovoltaic (PV) module safety qualification - Part 2: Requirements for testing
UL 61730-1:2017	Photovoltaic (PV) Module Safety Qualification - Part 1: Requirements for Construction
UL 61730-2:2017	Photovoltaic (PV) Module Safety Qualification - Part 2: Requirements for Testing

MARKINGS

The manufacturer is required to apply the following markings:
- Products shall be marked with the markings specified by the particular product standard.
- Products certified for Canada shall have all Caution and Warning markings in both English and French.

Additional bilingual markings not covered by the product standard(s) may be required by the Authorities Having Jurisdiction. It is the responsibility of the manufacturer to provide and apply these additional markings, where applicable, in accordance with the requirements of those authorities.

 © 2018 CSA Group. All rights reserved.

Supplement to Certificate of Compliance

Certificate: 80042800

Master Contract: 274817

The products listed, including the latest revision described below, are eligible to be marked in accordance with the referenced Certificate.

Product Certification History

Project	Date	Description
80042800	2020-11-03	New Certification Evaluation of Peimar PV modules to UL61730 and CAN/CSA 61730 Standards from IEC CB Scheme. Additional models and components were added to the project. - CB Certificates for IEC 61730-1 and -2 are provided along with supporting IEC test reports - Gap testing only for UL ND - Fire testing will be carried over from UL1703 certification report.

 © 2018 CSA Group. All rights reserved.

REV	DATE	RELEASE
	05/31/2022	SUBMIT FOR PERMIT

R-102 EQUIP. CUT SHEETS

3.300 kW PHOTOVOLTAIC PLANS

NAME: Larson, Carrie
ADDRESS: 2018 SW Fallon Ln
ADDRESS: Lake City, FL 32025
APN:

Daybreak Install LLC
CVC56966
2100 N Main St Ste. 212
Fort Worth, TX 76164
(817) 501-4922

Single Phase Inverter with HD-Wave Technology

for North America

SE3000H-US / SE3800H-US / SE5000H-US / SE6000H-US / SE7600H-US / SE10000H-US / SE11400H-US

12-25 YEAR WARRANTY

INVERTERS

Optimized installation with HD-Wave technology

- Specifically designed to work with power optimizers
- Record-breaking efficiency
- Fixed voltage inverter for longer strings
- Integrated arc fault protection and rapid shutdown for NEC 2014 and 2017, per article 690.11 and 690.12
- UL1741 SA certified, for CPUC Rule 21 grid compliance
- Extremely small
- Built-in module-level monitoring
- Outdoor and indoor installation
- Optional: Revenue grade data, ANSI C12.20 Class 0.5 (0.5% accuracy)

solaredge.com

solaredge

Single Phase Inverter with HD-Wave Technology for North America

SE3000H-US / SE3800H-US / SE5000H-US / SE6000H-US/ SE7600H-US / SE10000H-US / SE11400H-US

	SE3000H-US	SE3800H-US	SE5000H-US	SE6000H-US	SE7600H-US	SE10000H-US	SE11400H-US	
OUTPUT								
Rated AC Power Output	3000	3800 @ 240V 3300 @ 208V	5000	6000 @ 240V 5000 @ 208V	7600	10000	11400 @ 240V 10000 @ 208V	VA
Maximum AC Power Output	3000	3800 @ 240V 3300 @ 208V	5000	6000 @ 240V 5000 @ 208V	7600	10000	11400 @ 240V 10000 @ 208V	VA
AC Output Voltage Min.-Nom.-Max. (211 - 240 - 264)	✓	✓	✓	✓	✓	✓	✓	Vac
AC Output Voltage Min.-Nom.-Max. (183 - 208 - 229)	-	✓	-	✓	-	-	✓	Vac
AC Frequency (Nominal)	59.3 - 60 - 60.5[1]							Hz
Maximum Continuous Output Current @240V	12.5	16	21	25	32	42	47.5	A
Maximum Continuous Output Current @208V	-	16	-	24	-	-	48.5	A
GFDI Threshold	1							A
Utility Monitoring, Islanding Protection, Country Configurable Thresholds	Yes							
INPUT								
Maximum DC Power @240V	4650	5900	7750	9300	11800	15500	17650	W
Maximum DC Power @208V	-	5100	-	7750	-	-	15500	W
Transformer-less, Ungrounded	Yes							
Maximum Input Voltage	480							Vdc
Nominal DC Input Voltage	380				400			Vdc
Maximum Input Current @240V[2]	8.5	10.5	13.5	16.5	20	27	30.5	Adc
Maximum Input Current @208V[2]	-	9	-	13.5	-	-	27	Adc
Max. Input Short Circuit Current	45							Adc
Reverse-Polarity Protection	Yes							
Ground-Fault Isolation Detection	600kΩ Sensitivity							
Maximum Inverter Efficiency	99	99.2						%
CEC Weighted Efficiency	99						99 @ 240V 98.5 @ 208V	%
Nighttime Power Consumption	< 2.5							W
ADDITIONAL FEATURES								
Supported Communication Interfaces	RS485, Ethernet, ZigBee (optional), Cellular (optional)							
Revenue Grade Data, ANSI C12.20	Optional[3]							
Rapid Shutdown - NEC 2014 and 2017 690.12	Automatic Rapid Shutdown upon AC Grid Disconnect							
STANDARD COMPLIANCE								
Safety	UL1741, UL1741 SA, UL1699B, CSA C22.2, Canadian AFCI according to T.I.L. M-07							
Grid Connection Standards	IEEE1547, Rule 21, Rule 14 (HI)							
Emissions	FCC Part 15 Class B							
INSTALLATION SPECIFICATIONS								
AC Output Conduit Size / AWG Range	3/4" minimum / 14-6 AWG					3/4" minimum /14-4 AWG		
DC Input Conduit Size / # of Strings / AWG Range	3/4" minimum / 1-2 strings / 14-6 AWG					3/4" minimum / 1-3 strings / 14-6 AWG		
Dimensions with Safety Switch (HxWxD)	17.7 x 14.6 x 6.8 / 450 x 370 x 174					21.3 x 14.6 x 7.3 / 540 x 370 x 185		in / mm
Weight with Safety Switch	22 / 10		25.1 / 11.4	26.2 / 11.9		38.8 / 17.6		lb / kg
Noise	< 25				<50			dBA
Cooling	Natural Convection							
Operating Temperature Range	-40 to +140 / -25 to +60[4] (-40°F / -40°C option)[5]							°F / °C
Protection Rating	NEMA 4X (Inverter with Safety Switch)							

[1] For other regional settings please contact SolarEdge support
[2] A higher current source may be used; the inverter will limit its input current to the values stated
[3] Revenue grade inverter P/N: SExxxxH-US000NNC2
[4] For power de-rating information refer to: https://www.solaredge.com/sites/default/files/se-temperature-derating-note-na.pdf
[5] -40 version P/N: SExxxxH-US000NNU4

© SolarEdge Technologies, Inc. All rights reserved. SOLAREDGE, the SolarEdge logo, OPTIMIZED BY SOLAREDGE are trademarks or registered trademarks of SolarEdge Technologies, Inc. All other trademarks mentioned herein are trademarks of their respective owners. Date: 12/2018/V01/ENG NAM. Subject to change without notice.

RoHS

REV	DATE	RELEASE
	05/31/2022	SUBMIT FOR PERMIT

R-103

EQUIP. CUT SHEETS

3.300 kW PHOTOVOLTAIC PLANS

NAME: Larson, Carrie
ADDRESS: 2018 SW Fallon Ln
ADDRESS: Lake City, FL 32025
APN:

Daybreak Install LLC
CVC56966
2100 N Main St Ste. 212
Fort Worth, TX 76164
(817) 501-4922

Power Optimizer

For North America

P320 / P340 / P370 / P400 / P401 / P405 / P485 / P505

POWER OPTIMIZER

PV power optimization at the module-level

- Specifically designed to work with SolarEdge inverters
- Up to 25% more energy
- Superior efficiency (99.5%)
- Mitigates all types of module mismatch losses, from manufacturing tolerance to partial shading
- Flexible system design for maximum space utilization
- Fast installation with a single bolt
- Next generation maintenance with module-level monitoring
- Meets NEC requirements for arc fault protection (AFCI) and Photovoltaic Rapid Shutdown System (PVRSS)
- Module-level voltage shutdown for installer and firefighter safety

solaredge.com

solaredge

Power Optimizer

For North America

P320 / P340 / P370 / P400 / P401 / P405 / P485 / P505

Optimizer model (typical module compatibility)	P320 (for 60-cell modules)	P340 (for high-power 60-cell modules)	P370 (for higher-power 60 and 72-cell modules)	P400 (for 72 & 96-cell modules)	P401 (for high power 60 and 72 cell modules)	P405 (for high-voltage modules)	P485 (for high-voltage modules)	P505 (for higher current modules)	
INPUT									
Rated Input DC Power(1)	320	340	370	400		405	485	505	W
Absolute Maximum Input Voltage (Voc at lowest temperature)	48		60	80	60	125(2)		83(2)	Vdc
MPPT Operating Range	8 - 48		8 - 60	8 - 80	8-60	12.5 - 105		12.5 - 83	Vdc
Maximum Short Circuit Current (Isc)	11			10.1	11.75	11		14	Adc
Maximum DC Input Current	13.75			12.5	14.65	12.5		17.5	Adc
Maximum Efficiency	99.5								%
Weighted Efficiency	98.8							98.6	%
Overvoltage Category	II								
OUTPUT DURING OPERATION (POWER OPTIMIZER CONNECTED TO OPERATING SOLAREDGE INVERTER)									
Maximum Output Current	15								Adc
Maximum Output Voltage	60					85			Vdc
OUTPUT DURING STANDBY (POWER OPTIMIZER DISCONNECTED FROM SOLAREDGE INVERTER OR SOLAREDGE INVERTER OFF)									
Safety Output Voltage per Power Optimizer	1 ± 0.1								Vdc
STANDARD COMPLIANCE									
EMC	FCC Part 15 Class B, IEC61000-6-2, IEC61000-6-3								
Safety	IEC62109-1 (class II safety), UL1741								
Material	UL94 V-0 , UV Resistant								
RoHS	Yes								
INSTALLATION SPECIFICATIONS									
Maximum Allowed System Voltage	1000								Vdc
Compatible inverters	All SolarEdge Single Phase and Three Phase inverters								
Dimensions (W x L x H)	129 x 153 x 27.5 / 5.1 x 6 x 1.1			129 x 153 x 33.5 / 5.1 x 6 x 1.3	129 x 153 x 29.5 /5.1 x 6 x 1.16	129 x 159 x 49.5 / 5.1 x 6.3 x 1.9		129 x 162 x 59 / 5.1 x 6.4 x 2.3	mm / in
Weight (including cables)	630 / 1.4			750 / 1.7	655 / 1.5	845 / 1.9		1064 / 2.3	gr / lb
Input Connector	MC4(3)						Single or dual MC4(3)(4)	MC4(3)	
Input Wire Length	0.16 / 0.52								m / ft
Output Wire Type / Connector	Double Insulated / MC4								
Output Wire Length	0.9 / 2.95		1.2 / 3.9						m / ft
Operating Temperature Range(5)	-40 - +85 / -40 - +185								°C / °F
Protection Rating	IP68 / NEMA6P								
Relative Humidity	0 - 100								%

(1) Rated power of the module at STC will not exceed the optimizer "Rated Input DC Power". Modules with up to +5% power tolerance are allowed
(2) NEC 2017 requires max input voltage be not more than 80V
(3) For other connector types please contact SolarEdge
(4) For dual version for parallel connection of two modules use P485-4NMDMRM. In the case of an odd number of PV modules in one string, installing one P485 dual version power optimizer connected to one PV module. When connecting a single module seal the unused input connectors with the supplied pair of seals
(5) For ambient temperature above +85°C / +185°F power de-rating is applied. Refer to Power Optimizers Temperature De-Rating Technical Note for more details

PV System Design Using a SolarEdge Inverter(6)(7)		Single Phase HD-Wave	Single phase	Three Phase for 208V grid	Three Phase for 277/480V grid	
Minimum String Length (Power Optimizers)	P320, P340, P370, P400, P401	8		10	18	
	P405, P485, P505	6		8	14	
Maximum String Length (Power Optimizers)		25		25	50(8)	
Maximum Power per String		5700 (6000 with SE7600-US - SE11400-US)	5250	6000(9)	12750(10)	W
Parallel Strings of Different Lengths or Orientations		Yes				

(6) For detailed string sizing information refer to: http://www.solaredge.com/sites/default/files/string_sizing_na.pdf
(7) It is not allowed to mix P405/P485/P505 with P320/P340/P370/P400/P401 in one string
(8) A string with more than 30 optimizers does not meet NEC rapid shutdown requirements; safety voltage will be above the 30V requirement
(9) For 208V grid: it is allowed to install up to 6,500W per string when the maximum power difference between each string is 1,000W
(10) For 277/480V grid: it is allowed to install up to 15,000W per string when the maximum power difference between each string is 2,000W

© SolarEdge Technologies Ltd. All rights reserved. SOLAREDGE, the SolarEdge logo, OPTIMIZED BY SOLAREDGE are trademarks or registered trademarks of SolarEdge Technologies, Inc. All other trademarks mentioned herein are trademarks of their respective owners. Date: 04/2020/V02/ENG NAM. Subject to change without notice.

Intertek RoHS

REV	DATE	RELEASE
	05/31/2022	SUBMIT FOR PERMIT

R-104

EQUIP. CUT SHEETS

3.300 kW PHOTOVOLTAIC PLANS

NAME	Larson, Carrie
ADDRESS	2018 SW Fallon Ln
ADDRESS	Lake City, FL 32025
APN	

Daybreak Install LLC
CVC56966
2100 N Main St Ste. 212
Fort Worth, TX 76164
(817) 501-4922

Tech Brief

IRONRIDGE

XR Rail Family

Solar Is Not Always Sunny

Over their lifetime, solar panels experience countless extreme weather events. Not just the worst storms in years, but the worst storms in 40 years. High winds capable of ripping panels from a roof, and snowfalls weighing enough to buckle a panel frame.

XR Rails are the structural backbone preventing these results. They resist uplift, protect against buckling and safely and efficiently transfer loads into the building structure. Their superior spanning capability requires fewer roof attachments, reducing the number of roof penetrations and the amount of installation time.

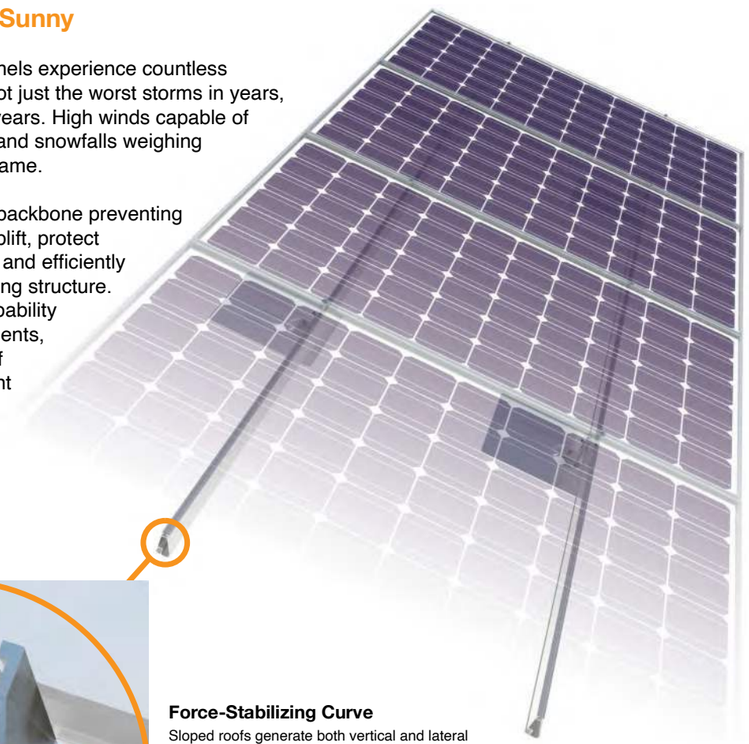

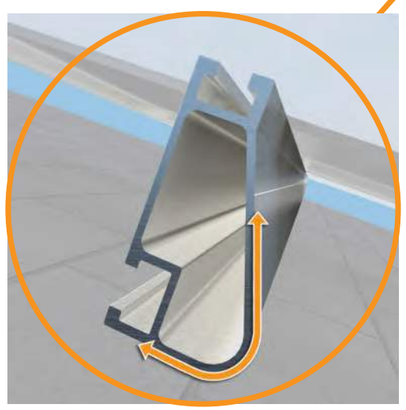

Force-Stabilizing Curve

Sloped roofs generate both vertical and lateral forces on mounting rails which can cause them to bend and twist. The curved shape of XR Rails is specially designed to increase strength in both directions while resisting the twisting. This unique feature ensures greater security during extreme weather and a longer system lifetime.

Compatible with Flat & Pitched Roofs

XR Rails are compatible with FlashFoot and other pitched roof attachments.

IronRidge offers a range of tilt leg options for flat roof mounting applications.

Corrosion-Resistant Materials

All XR Rails are made of 6000-series aluminum alloy, then protected with an anodized finish. Anodizing prevents surface and structural corrosion, while also providing a more attractive appearance.

Tech Brief

XR Rail Family

The XR Rail Family offers the strength of a curved rail in three targeted sizes. Each size supports specific design loads, while minimizing material costs. Depending on your locatio n, there is an XR Rail to match.

XR10

XR10 is a sleek, low-profile mounting rail, designed for regions with light or no snow. It achieves spans up to 6 feet, while remaining light and economical.

- 6' spanning capability
- Moderate load capability
- Clear & black anodized finish
- Internal splices available

XR100

XR100 is the ultimate residential mounting rail. It supports a range of wind and snow conditions, while also maximizing spans up to 10 feet.

- 10' spanning capability
- Heavy load capability
- Clear & black anodized finish
- Internal splices available

XR1000

XR1000 is a heavyweight among solar mounting rails. It's built to handle extreme climates and spans up to 12 feet for commercial applications.

- 12' spanning capability
- Extreme load capability
- Clear anodized finish
- Internal splices available

Rail Selection

The table below was prepared in compliance with applicable engineering c odes and standards.* Values are based on the following criteria: ASCE 7-16, Gable Roof Flush Mount, Roof Zones 1 & 2e, Exposure B, Roof Slope of 8 to 20 degrees and Mean Building Height of 30 ft. Visit IronRidge.com for detailed certification letters.

Load		Rail Span					
Snow (PSF)	Wind (MPH)	4'	5' 4"	6'	8'	10'	12'
None	90						
	120						
	140	XR10		XR100		XR1000	
	160						
20	90						
	120						
	140						
	160						
30	90						
	160						
40	90						
	160						
80	160						
120	160						

*Table is meant to be a simplified span chart for conveying general rail capabilities. Use approved certification letters for actual design guidance.

© 2020 IronRidge, Inc. All rights reserved. Visit www.ironridge.com or call 1-800-227-9523 for more information. Version 1.20

REV	DATE	RELEASE
	05/31/2022	SUBMIT FOR PERMIT

R-105

EQUIP. CUT SHEETS

3.300 kW PHOTOVOLTAIC PLANS

NAME: Larson, Carrie
ADDRESS: 2018 SW Fallon Ln
ADDRESS: Lake City, FL 32025
APN:

Daybreak Install LLC
CVC56966
2100 N Main St Ste. 212
Fort Worth, TX 76164
(817) 501-4922

Tech Brief

IRONRIDGE

Class A Fire Rating

Background

All roofing products are tested and classified for their ability to resist fire.

Recently, these fire resistance standards were expanded to include solar equipment as part of the roof system. Specifically, this requires the modules, mounting hardware and roof covering to be tested together as a system to ensure they achieve the same fire rating as the original roof covering.

These new requirements are being adopted throughout the country in 2016.

IronRidge Certification

IronRidge was the first company to receive a Class A Fire Rating—the highest possible rating—from Intertek Group plc., a Nationally Recognized Testing Laboratory.

IronRidge Flush Mount and Tilt Mount Systems were tested on sloped and flat roofs in accordance with the new UL 1703 & UL 2703 test standards. The testing evaluated the system's ability to resist flame spread, burning material and structural damage to the roof.

Refer to the table below to determine the requirements for achieving a Class A Fire Rating on your next project.

Fire Testing Process

Test Setup

Solar Modules
Solar modules are given a Type classification based on their materials and construction.

Mounting System
Mounting is tested as part of a system that includes type-tested modules and fire-rated roof covering.

Roof Covering
Roof covering products are given a Fire Class Rating of A, B or C based on their tested fire resistance.

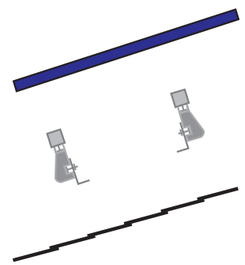

Burning Brand Test

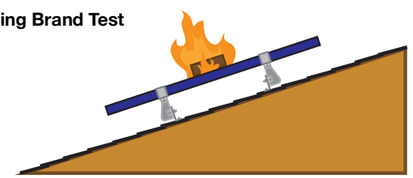

A burning wooden block is placed on module as a fan blows at 12 mph. Flame cannot be seen on underside of roof within 90 minutes.

Spread of Flame Test

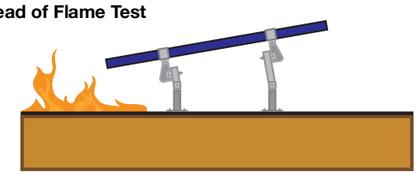

Flame at southern edge of roof is aimed up the roof as a fan blows at 12 mph. The flame cannot spread 6 feet or more in 10 minutes.

System	Roof Slope	Module	Fire Rating*
Flush Mount	Any Slope	Type 1, 2, & 3	Class A
Tilt Mount	≤ 6 Degrees	Type 1, 2, & 3	Class A

*Class A rated PV systems can be installed on Class A, B, and C roofs.

Tech Brief

Frequently Asked Questions

What is a "module type"?

The new UL1703 standard introduces the concept of a PV module type, based on 4 construction parameters and 2 fire performance parameters. The purpose of this classification is to certify mounting systems without needing to test it with every module.

What roofing materials are covered?

All fire rated roofing materials are covered within this certification including composition shingle, clay and cement tile, metal, and membrane roofs.

What if I have a Class C roof, but the jurisdiction now requires Class A or B?

Generally, older roofs will typically be "grandfathered in", and will not require re-roofing. However, if 50% or more of the roofing material is replaced for the solar installation the code requirement will be enforced.

Where is the new fire rating requirement code listed?

2012 IBC: 1509.7.2 Fire classification. Rooftop mounted photovoltaic systems shall have the same fire classification as the roof assembly required by Section 1505.

Where is a Class A Fire Rating required?

The general requirement for roofing systems in the IBC refers to a Class C fire rating. Class A or B is required for areas such as Wildland Urban Interface areas (WUI) and for very high fire severity areas. Many of these areas are found throughout the western United States. California has the most Class A and B roof fire rating requirements, due to wild fire concerns.

Are standard mid clamps covered?

Mid clamps and end clamps are considered part of the PV "system", and are covered in the certification.

What attachments and flashings are deemed compatible with Class A?

Attachments and their respective flashings are not constituents of the rating at this time. All code-compliant flashing methods are acceptable from a fire rating standpoint.

What mounting height is acceptable?

UL fire testing was performed with a gap of 5", which is considered worst case in the standard. Therefore, the rating is applicable to any module to roof gap.

Am I required to install skirting to meet the fire code?

No, IronRidge achieved a Class A fire rating without any additional racking components.

What determines Fire Classification?

Fire Classification refers to a fire-resistance rating system for roof covering materials based on their ability to withstand fire exposure.

Class A - effective against severe fire exposure
Class B - effective against moderate fire exposure
Class C - effective against light fire exposure

What if the roof covering is not Class A rated?

The IronRidge Class A rating will not diminish the fire rating of the roof, whether Class A, B, or C.

What tilts is the tilt mount system fire rated for?

The tilt mount system is rated for 1 degrees and up and any roof to module gap, or mounting height.

More Resources

Installation Manuals
Visit our website for manuals that include UL 2703 Listing and Fire Rating Classification.
Go to IronRidge.com

Engineering Certification Letters
We offer complete engineering resources and pre-stamped certification letters.
Go to IronRidge.com

© 2016 IronRidge, Inc. All rights reserved. Visit www.ironridge.com or call 1-800-227-9523 for more information. Version 1.20

REV	DATE	RELEASE
	05/31/2022	SUBMIT FOR PERMIT

R-106

EQUIP. CUT SHEETS

3.300 kW PHOTOVOLTAIC PLANS

NAME Larson, Carrie
ADDRESS 2018 SW Fallon Ln
ADDRESS Lake City, FL 32025
APN

Daybreak Install LLC
CVC56966
2100 N Main St Ste. 212
Fort Worth, TX 76164
(817) 501-4922

IRONRIDGE

Tech Brief

UFO Family of Components

Simplified Grounding for Every Application

The UFO family of components eliminates the need for separate grounding hardware by bonding solar modules directly to IronRidge XR Rails. All system types that feature the UFO family—Flush Mount, Tilt Mount and Ground Mount—are fully listed to the UL 2703 standard.

UFO hardware forms secure electrical bonds with both the module and the rail, resulting in many parallel grounding paths throughout the system. This leads to safer and more reliable installations.

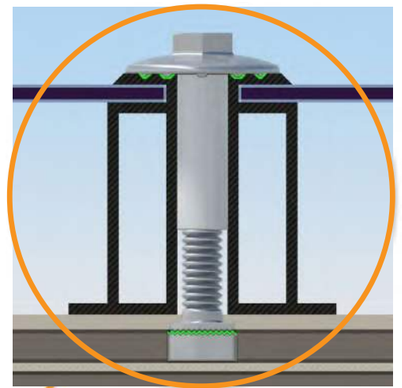

Universal Fastening Object (UFO)
The UFO securely bonds solar modules to XR Rails. It comes assembled and lubricated, and can fit a wide range of module heights.

Stopper Sleeve
The Stopper Sleeve snaps onto the UFO, converting it into a bonded end clamp.

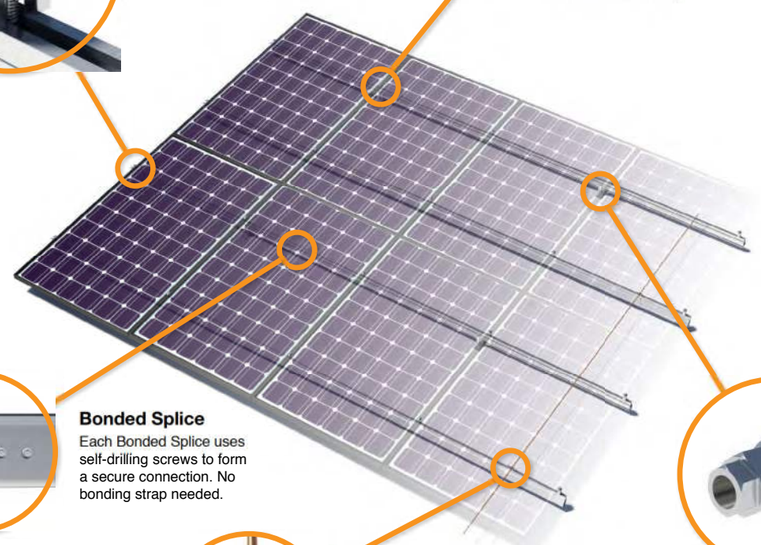

Bonded Splice
Each Bonded Splice uses self-drilling screws to form a secure connection. No bonding strap needed.

Grounding Lug
A single Grounding Lug connects an entire row of PV modules to the grounding conductor.

Bonded Attachments
The bonding bolt attaches and bonds the L-foot to the rail. It is installed with the same socket as the rest of the system.

System Diagram

Tech Brief

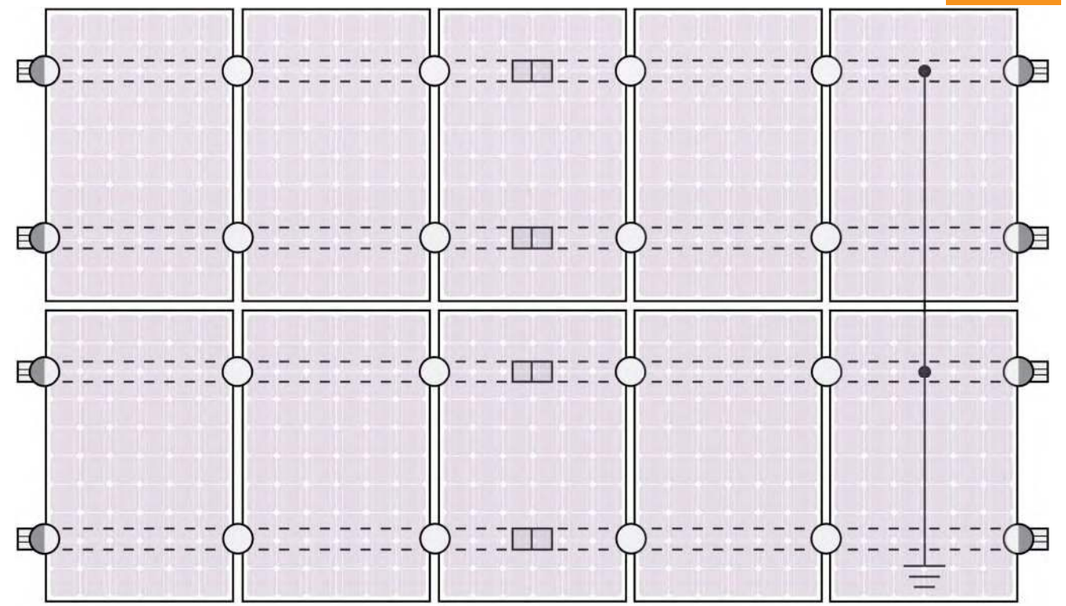

UFO | Stopper Sleeve | Grounding Lug | Bonded Splice | Ground Wire

Approved Enphase microinverters can provide equipment grounding of IronRidge systems, eliminating the need for grounding lugs and field installed equipment ground conductors (EGC). A minimum of two microinverters mounted to the same rail and connected to the same Engage cable is required. Refer to installation manuals for additional details.

UL Certification

The IronRidge Flush Mount, Tilt Mount, and Ground Mount Systems have been listed to UL 2703 by Intertek Group plc.

UL 2703 is the standard for evaluating solar mounting systems. It ensures these devices will maintain strong electrical and mechanical connections over an extended period of time in extreme outdoor environments.

Go to IronRidge.com/UFO

Cross-System Compatibility

Feature	Flush Mount	Tilt Mount	Ground Mount
XR Rails	✔	✔	XR1000 Only
UFO/Stopper	✔	✔	✔
Bonded Splice	✔	✔	N/A
Grounding Lugs	1 per Row	1 per Row	1 per Array
Microinverters & Power Optimizers	Enphase - M250-72, M250-60, M215-60, C250-72 Darfon - MIG240, MIG300, G320, G640 SolarEdge - P300, P320, P400, P405, P600, P700, P730		
Fire Rating	Class A	Class A	N/A
Modules	Tested or Evaluated with over 400 Framed Modules Refer to installation manuals for a detailed list.		

© 2016 IronRidge, Inc. All rights reserved. Visit www.ironridge.com or call 1-800-227-9523 for more information. Version 1.10

REV	DATE	RELEASE
	05/31/2022	SUBMIT FOR PERMIT

R-107

EQUIP. CUT SHEETS

3.300 kW PHOTOVOLTAIC PLANS

NAME	Larson, Carrie
ADDRESS	2018 SW Fallon Ln
ADDRESS	Lake City, FL 32025
APN	

Daybreak Install LLC
CVC56966
2100 N Main St Ste. 212
Fort Worth, TX 76164
(817) 501-4922

S-5!®

The Right Way!

The right way to attach almost anything to metal roofs!

ProteaBracket™

ProteaBracket™ is the most versatile standing seam metal roof attachment solution on the market, fitting most trapezoidal sheet profiles with and without intermediate insulation. It features an adjustable attachment base and multiple solar module attachment options (illustrated on back) to accommodate varying widths and heights. There are no messy sealants to apply and no chance for leaks; the ProteaBracket comes with factory-applied, adhesive rubber sealant to ensure quick installation and a weather-proof fit.

Installation is simple! The ProteaBracket is mounted directly onto the crown of the panel, straddling the profile. No surface preparation is necessary; simply wipe away excess oil and debris, align, and apply. Secure ProteaBracket through its pre-punched holes, using the hardened drill point S-5!® screws.

ProteaBracket is the perfect match for our S-5-PV Kit and spares you the hassle of cold-bridging! For a solar attachment solution that is both economical and easy to use, choose ProteaBracket.*

*When ProteaBracket is used in conjunction with the S-5-PV Kit, an additional nut is required during installation.

1

2
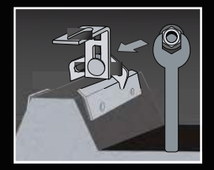
3

4
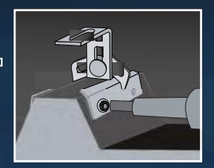

ProteaBracket™

S-5!® ProteaBracket™ is a versatile bracket that adjusts easily to most trapezoidal roof profiles.

888-825-3432 | www.S-5.com

S-5!®

The Right Way!

ProteaBracket™ is the perfect solar attachment solution for most trapezoidal exposed-fastened metal roof profiles! No messy sealants to apply. The factory-applied adhesive rubber sealant weather-proofs and makes installation easy!

Each **ProteaBracket™** comes with a factory-applied, adhesive rubber sealant on the base. A structural A2 stainless steel bimetal attachment bracket, ProteaBracket is compatible with most common metal roofing materials. All four pre-punched holes must be used to achieve tested strength. Mounting hardware is furnished with the ProteaBracket. For design assistance, ask your distributor, or visit **www.S-5.com** for the independent lab test data that can be used for load-critical designs and applications. Also, please visit our website for more information including metallurgical compatibilities and specifications. S-5!® holding strength is unmatched in the industry.

Multiple Attachment Options:

Side Rail Option

Top Rail Option

S-5-PV Kit Option

ProteaBracket™

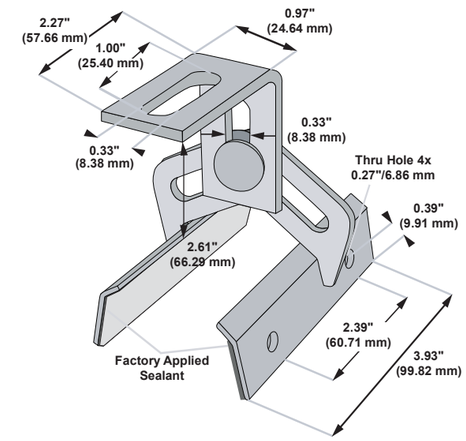

Please note: All measurements are rounded to the second decimal place.

Example Applications

S-5-PV Kit demonstrated with a ProteaBracket on a trapezoidal profile.

Example Profile

S-5!® Warning! Please use this product responsibly!

Products are protected by multiple U.S. and foreign patents. For published data regarding holding strength, bolt torque, patents, and trademarks, visit the S-5! website at www.S-5.com.

Copyright 2013, Metal Roof Innovations, Ltd. S-5! products are patent protected.
S-5! aggressively protects its patents, trademarks, and copyrights. Version 112513.

Distributed by

REV	DATE	RELEASE
	05/31/2022	SUBMIT FOR PERMIT

R-108

EQUIP. CUT SHEETS

3.300 kW PHOTOVOLTAIC PLANS

NAME	Larson, Carrie
ADDRESS	2018 SW Fallon Ln
ADDRESS	Lake City, FL 32025
APN	

Daybreak Install LLC
CVC56966
2100 N Main St Ste. 212
Fort Worth, TX 76164
(817) 501-4922

Powering Business Worldwide

General Duty Cartridge Fuse Safety Switch

DG222NRB

UPC:782113144221

Dimensions:
- **Height:** 7 IN
- **Length:** 6.41 IN
- **Width:** 8.4 IN

Weight:9 LB

Notes: Maximum hp ratings apply only when dual element fuses are used. 3-Phase hp rating shown is a grounded B phase rating, UL listed.

Warranties:
- Eaton Selling Policy 25-000, one (1) year from the date of installation of the Product or eighteen (18) months from the date of shipment of the Product, whichever occurs first.

Specifications:
- **Type:** General Duty/Cartridge Fuse
- **Amperage Rating:** 60A
- **Enclosure:** NEMA 3R
- **Enclosure Material:** Painted galvanized steel
- **Fuse Class Provision:** Class H fuses
- **Fuse Configuration:** Fusible with neutral
- **Number Of Poles:** Two-pole
- **Number Of Wires:** Three-wire
- **Product Category:** General Duty Safety Switch
- **Voltage Rating:** 240V

Supporting documents:
- Eatons Volume 2-Commercial Distribution
- Eaton Specification Sheet - DG222NRB

Certifications:
- UL Listed

pe.eaton.com

1.1 Switching Devices

Safety Switches

1

All general-duty switches above 100A and all heavy-duty switches incorporate these K-Series switch design features.

- Two points of contact provide a positive open and close, easier operation, and also help prevent contact burning for longer contact life

Visible Double-Break Rotary Blade Mechanism

- Protects against accidental contact with energized parts. Probe holes enable the user to test if the line side is energized without removing the shield. Not provided on general-duty switches, but available as a field kit or factory installed

Clear Line Shield

Clearly Visible Handle

- The position (ON or OFF) can be clearly seen from a distance and the length provides for easy operation

Triple Padlocking Capability

- Personnel safety feature because the large hasp can accommodate up to three 3/8-inch (9.5 mm) shank locks

Additional Locking Capability

- Cabinet door can be further padlocked at the top and bottom as applicable

Interlocking Mechanism

- Door cannot be opened when the handle is in the ON position. Front and side operable defeater mechanism provides for user access when necessary on single-throw switches

Tangential Knockouts

- An ample number are provided on the top, bottom and sides of both NEMA Types 1 and 3R enclosures through 200A

Bolt-On Hub Kits

- For switches in a NEMA Type 3R, 30–200A. Use a Myers type hub for all others

Standards and Certifications
- UL listed File No. E5239
- Meets UL 98 for enclosed switches and NEMA Std. KS-1

Listed

Seismic Qualifications
- General-duty switches exceed the requirements of Uniform Building Code (UBC) and California Code Title 24 OSP-0011-10, OSP-0012-10

Product compliance: No Data

© 2016 Eaton. All rights reserved.

REV	DATE	RELEASE
	05/31/2022	SUBMIT FOR PERMIT

R-109

EQUIP. CUT SHEETS

3.300 kW PHOTOVOLTAIC PLANS

NAME	Larson, Carrie
ADDRESS	2018 SW Fallon Ln
ADDRESS	Lake City, FL 32025
APN	

Daybreak Install LLC
CVC56966
2100 N Main St Ste. 212
Fort Worth, TX 76164
(817) 501-4922