PEOPLES STATE BANK

WEST OFFICE
(NEW BRANCH BANK)

LAKE CITY, FLORIDA

DESIGN SERVICES INCORPORATED

ARCHITECTURE
INTERIOR DESIGN
SPACE PLANNING

1778 N. PARK AVE. SUITE 100, MAITLAND, FLORIDA 32751. (407) 629-5755

LIC. NO. F000061

DSI CONSULTANTS

MECHANICAL, ELECTRICAL ENGINEER
OCI ASSOCIATES, INC.
427 CENTERPOINTE CIRCLE, SUITE 1825, ALTAMONTE SPRINGS, FLORIDA 32701
407/332-5110

STRUCTURAL ENGINEER
MITZO ENGINEERING, LLC
670 N. ORLANDO AVE., SUITE 103A, MAITLAND, FL 32751
407/644-1500

APPROVED
(Subject to Revisions)
Inspection Department
Lake City Fire Dept.
State Fire Inspector
License # 48544
By Charles Smith Date: 7-11-06

06003.00-COVER SHEET May 23, 2006 1:32:53 PM

DESIGN SERVICES INCORPORATED
1778 N. PARK AVENUE, SUITE 100, MAITLAND, FL 32751,
TELEPHONE(407) 629-5755
LICENSE NO. F00061
ARCHITECTURE
INTERIOR DESIGN
SPACE PLANNING

WEST OFFICE
(NEW BRANCH BANK)
LAKE CITY, FLORIDA

PEOPLES STATE BANK

GENERAL NOTES

1 2 3 4

INTERIOR ELEVATION KEY

NORTH
ACTUAL
PLAN

MARK	DATE	REVISIONS

COMM. NO:	06003.00	DRAWN:	KLP
DATE:	02/15/06	CHECKED:	ELM
SCALE:	AS NOTED		
FILE:	06003.00-COVER SHEET		

COVER SHEET

SEAL

ARCHITECT/CONSULTANT
EDDIE L. MUSE
JUN 07 2006
LICENSE NO. AR-12112

SHEET NUMBER
0.01

MATERIALS LEGEND

CONCRETE — CONCRETE (PLAN)
SECTION

MASONRY — CMU (PLAN)
CMU (PLAN LARGE SCALE)
CMU (PLAN LARGE SCALE)
BRICK VENEER OR THRU WALL STRUCTURAL BRICK

METAL — STEEL
ALUMINUM

FILL — EARTH

WOOD — WOOD BLOCKING OR FRAMNG
WOOD SHIM
WOOD FINISH
WOOD ELEVATION
PLYWOOD
PARTICLE BOARD

INSULATION — INSULATION RIGID
INSULATION BATT

DRYWALL — DRYWALL

STUCCO — STUCCO

SYMBOLS LEGEND

PARTITION TYPE
WINDOW
STOREFRONT
DOOR NUMBER
ACCESSORY NUMBER
DETAIL — DETAIL NUMBER / DRAWING NUMBER
WALL SECTION — SECTION NUMBER / DRAWING NUMBER
BUILDING SECTION — SECTION NUMBER

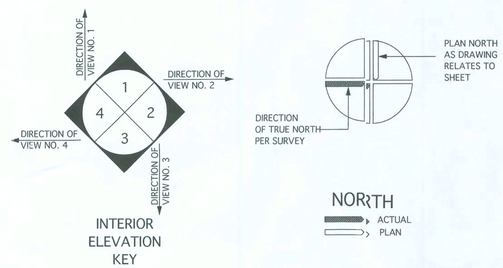

INTERIOR ELEVATION KEY

LEGAL DESCRIPTION

VICINITY MAP

WIND SPEED

110 MPH

WIND IMPORTANCE FACTOR: 1.00

BUILDING CATEGORY: ENCLOSED

WIND EXPOSURE: B

INTERNAL PRESSURE COEFFICIENT: +/- 0.18

COMPONENTS & CLADDING: SEE SHEET A5.00 & STRUCTURAL DWGS.

APPLICABLE CODES

FLORIDA BUILDING CODE 2004
FLORIDA PLUMBING CODE 2004
FLORIDA MECHANICAL CODE 2004
FLORIDA FUEL GAS CODE 2004
FLORIDA ADMINISTATIVE CODE
FLORIDA FIRE PREVENTION CODE 2004
FLORIDA STATUTES
LIFE SAFETY CODE 2003
NATIONAL ELECTRIC CODE 2002

BUILDING DATA

CLASSIFICATION BY OCCUPANCY	B	BUSINESS
MIXED OCCUPANCY	N/A	
SEPARATION REQUIREMENTS	N/A	
TYPE OF CONSTRUCTION	VI	
PROTECTED	N/A	
UNPROTECTED	YES	
SPRINKLERED	NO	
	REQ./ALLOWED	PROVIDED
BUILDING HEIGHT (FT)	40	25
HEIGHT INCREASE	N/A	N/A
NUMBER OF STORIES	----	1
		FIRST FLOOR
BUILDING AREA PER FLOOR (SQ.FT.)	9000	3163
AREA INCREASE	N/A	N/A
OCCUPANT LOAD		AREA (SQ. FT.)
BUSINESS	AREA÷100	3029
ASSEMBLY (CONCENTRATED)	AREA÷3	0
ASSEMBLY (UNCONCENTRATED)	AREA÷15	0
STORAGE	AREA÷300	0
LOUNGES	AREA÷15	134
OTHER		0
TOTAL OCCUPANCY LOAD PER FLOOR		39.223
MEANS OF EGRESS	REQUIRED/ ALLOWED	PROVIDED
MAXIMUM TRAVEL DISTANCE (FEET)	200	81
MAX. DEAD END CORRIDOR LENGTH (FEET)	20	N/A
EGRESS WIDTH - LEVEL (INCHES)	7.845	36
EGRESS WIDTH - STAIR (INCHES)	11.767	N/A
MIN. CORRIDOR/AISLE WIDTH (INCHES)	36	54
MIN. CLEAR OPENING EXIT DOORS (INCHES)	32	36
MINIMUM STAIR WIDTH (INCHES)	36	N/A
COMMON PATH OF TRAVEL (FEET)	75	37
FIRE PROTECTION REQUIREMENTS		
	REQUIRED	PROVIDED
PARTY AND FIRE WALLS	0	0
INTERIOR BEARING WALLS	0	0
COLUMNS	0	0
BEAMS, GIRDERS, TRUSSES	0	N/A
FLOOR CONSTRUCTION	0	N/A
ROOF CONSTRUCTION	0	N/A
PLUMBING FIXTURE REQUIREMENTS	REQUIRED	FIRST FLOOR
TOTAL OCCUPANCY (NO. OF PERSONS)	39.223	PROVIDED
WATER CLOSETS	0.784	2
URINALS*	0	0
LAVATORIES	0.49	2
DRINKING FOUNTAINS	0.392	1
SERVICE SINKS	1	1

*OPTIONAL URINALS MAY BE SUBSTITUTED 1/2 REQUIRED WATER CLOSETS

DESIGN SERVICES INCORPORATED
1770 N. PARK AVENUE, SUITE 100, MAITLAND, FL 32751,
TELEPHONE(407) 629-5755
LICENSE NO. F00061
ARCHITECTURE INTERIOR DESIGN SPACE PLANNING

WEST OFFICE
(NEW BRANCH BANK)
LAKE CITY, FLORIDA

PEOPLES STATE BANK

GENERAL NOTES

INTERIOR ELEVATION KEY

NORTH — ACTUAL / PLAN

MARK	DATE	REVISIONS

COMM. #O:	06003.00	DRAWN:	KLP
DATE:	02/15/06	CHECKED:	ELM
SCALE:	AS NOTED		
FILE:	06003.00-COVER SHEET		

PROJECT DATA SHEET

SEAL — ARCHITECT/CONSULTANT

EDDIE L. MUSE
JUN 07 2006
LICENSE NO. AR-12112

SHEET NUMBER
0.02

ABBREVIATIONS

AB	ANCHOR BOLT	CA	COUNTERSINK	FHS	FIRE HOSE STATION	KO	KNOCKOUT	ORD	OVERLOW ROOF DRAIN	SD	SMOKE DAMPER
ACC	ACCESS	CSMT	CASEMENT	FHV	FIRE HOSE VALVE	KP	KICTSLATE	OS	OVERLOW SCUPPER	SDSP	SOAP DISPENSER
ACFL	ACCESS FLOOR	CST	CAST STONE	FHWS	FLAT HEAD WOOD SCREW					SEC	SECTION
ACT	ACOUSTICAL CEILING TILE	CT	CERAMIC TILE	FIN	FINISH(ED)	L	ANGLE	PAR	PARALLEL	SECT	SECTION
ACOUS	ACOUSTICAL	CTR	CENTER	FIXT	FIXTURE	LAB	LABORATORY	PART	PARTITION	SECRT	SECRETARY
ACPL	ACOUSTICAL PLASTER	CTSK	COUNTERSUNK SCREW	FL	FLOOR	LAD	LADDER	PB	PUSH BUTTON	SF	STOREFRONT
A/C	AIR CONDITIONING	CW	COLD WATER	FL	FLOW LINE	LAM	LAMINATE	PBR	PANIC BAR	SF	SQUARE FOOT
AD	AREA DRAIN	CWL	CURTAIN WALL	FLASH	FLASHING	LAV	LAVATORY	PBD	PARTICLE BOARD	SFGL	SAFETY GLASS
ADD	ADDENDUM	CYD	CUBIC YARD	FLEX	FLEXIBLE	LB	POUND	PC	PRECAST CONCRETE	SH	SHOWER
ADJ	ADJACENT			FLG	FLANGE	LBL	LABEL	PCD	PAPER CUB DISPENSER	SH	SHELF, SHELVES
ADJT	ADJUSTABLE)	D	DEPTH OR DEEP	FLUOR	FLUORESCENT	LBT	LAG BOLT	PCF	POUNDS PER CUBIC FOOT	SHD	SHOWER HEAD
ADMIN	ADMINISTRATION	DA	DOUBLE ACTING	FLPT	FLOOR PLATE	LCD	LINEAR CEILING DIFFUSER	PE	PORCELAIN ENAMEL	SHT	SHEET
AFF	ABOVE FINISHED FLOOR	DBL	DOUBLE	FLR	FLOOR	LF	LINE FEEAFTO	PED	PEDESTAL	SHGT	SHEATHING
AHU	AIR HANDLER UNIT	DEMO	DEMOLISH/DEMOLITION	FND	FOUNDATION	LH	LEFT HAND	PERF	PERFORATED	SIM	SIMILAR
ALT	ALTERNATE	DEP	DEPRESSED	FOC	FACE OF CONCRETE	LIN	LINE(S)	PFB	PREFABRICATE(D)	SJ	SEALANT
ALUM	ALUMINUM	DEPN	DEPRESSION	FOF	FACE OF FINISH	LKR	LOCKER	PFL	POUNDS PER LINEAL FOOT	SLV	SLEEVE
ANC	ANCHOR, ANCHORAGE	DEPT	DEPARTMENT	FOM	FACE OF MASONRY	LL	LIVE LOAD	PFN	PREFINISHED	SM	SURFACE MOUNTED
ANUN	ANNUNCIATOR	DET	DETAIL(S)	FOS	FACE OF STUD(S)	LLH	LONG LEG HORIZONTAL	PL	PLATE	SMC	SANITARY NAPKIN DISPENSER
ANOD	ANODIZED	DF	DRINKING FOUNTAIN	FP	FIRE PROF(ING)	LLV	LONG LEG VERTICAL	PLAM	PLASTIC LAMINATE	SMR	SANITARY NAPKIN RECEPTOR
AP	ACCESS PANEL	DIA	DIAMETER	FPL	FIREPLACE	LMP	LINEAR METAL CEILING	PLAS	PLASTER	SOG	SLAB ON GRADE
APC	ARCHITECTURAL PRECAST	DIAG	DIAGONAL	FRMG	FRAMING	LOC	LOCATION OR LOCATE	PL GL	PLATE GLASS	SP	STANDPIPE
APPROX	APPROXIMATE	DIAM	DIAMETER	FS	FULL SIZE	LP	LIGHTPROOF	PLUMB	PLUMBING	SP	SOUND PROOF
ARCH	ARCHITECTURAL	DIFF	DIFFUSER	FSK	FLOOR SINK	LPT	LOW POINT	PLYWD	PLYWOOD	SPEC	SPECIFICATIONS
ASPH	ASPHALT	DIM	DIMENSION	FSTOP	FIRESTOPPING	LS	LAWN SPRINKLER	PML	PANEL	SPK	SPEAKER
AT	ASPHALT TILE	DISP	DISPENSER/DISPOSER	FT	FOOT/FEET	LT	LIGHT	PNLG	PANELING	SPL	SPECIAL
AUTO	AUTOMATIC	DIST	DISTRIBUTION	FTG	FOOTING	LTG	LIGHTING	PNT	PAINT	SPR	SINGLE PLY ROOF
AWT	ACOUSTICAL WALL TREATMENT	DIV	DIVISION	FUR	FURRED/FURRING	LVR	LOUVER	PR	PAIR	SQ	SQUARE
		DH	DOUBLE HUNG	FUT	FUTURE	LWC	LIGHT WEIGHT CONCRETE	PRELIM	PRELIMINARY	SQ YD	SQUARE YARD
BA	BUILDING ACCESSORY	DJT	DUMMY JOINT			LWC	LINEAR WOOD CEILING	PRES	PLASTIC RESIN	SR	SERVICE RECEPTOR
BBD	BULLETIN BOARD	DMP	DEMOUNTABLE PARTITION	GA	GAGE/GAUGE			PRESS	PRESSURE	SS	SERVICE SINK
BC	BRICK COURSE	DN	DOWN	GAL	GALL(ONES)	M	MIDDLE	PRIM	PRIMARY	SST	STAINLESS STEEL
BD	BOARD	DP	DATA PROCESSING	GALV	GALVANIZED	M	METERS	PRF	PREFORMED	ST	STREET
BFE	BOTTOM FOOTING ELEVATION	DR	DOOR	GB	GRAB BAR	MAN	MANUAL	PRIM	PRIMARY	ST	STONE TILE
BG	BUMPER GUARD	DS	DOWNSPOUT	GBM	GRADE BEAM	MAS	MASONRY	PROPL	PROPERTY LINE	STA	STATION
BIT	BITUMINOUS	DTL	DETAIL	GC	GENERAL CONTRACTOR	MTL	MATERIAL	PRV	POWER ROOF VENTILATOR	STC	SOUND TRANSMISSION COEFFICIENT
BKT	BRACKET	DW	DUMBWAITER	GF	GROUND FACE	MAX	MAXIMUM	PSC	PRESTRESSED CONCRETE	STD	STANDARD
BLDG	BUILDING	DWG	DRAWING	GEN	GENERATOR	MB	MACHINE BOLT	PSF	POUNDS PER SQUARE FOOT	STL	STEEL
BLK	BLOCK	DWLS	DOWEL(S)	GEN	GENERAL	MBD	MARKER BOARD	PSI	POUNDS PER SQUARE INCH	STN	STONE
BLKG	BLOCKING	DWR	DRAWER	GI	GALVANIZED IRON	MBR	MEMBER	PT	PRESSURE TREATED	STNL	STONE LEDGER
BLT	BORROWED LIGHT			GKT	GASKET(ED)	MC	MEDICINE CABINET	PT	POINT	STO	STORAGE
BLW	BELOW	E	EAST	GL	GLASS OR GLAZING	MCU	MODULAR COOLING UNIT	PTC	POST TENSIONED CONCRETE	STOR	STORAGE
BM	BEAM	EA	EACH	GMU	GLASS MASONRY UNIT	MECH	MECHANICAL	PTD	PAPER TOWEL DISPENSER	STRUC	STRUCTURAL
BMK	BENCH MARK	EB	EXPANSION BOLT	GND	GROUND	MED	MEDIUM	PTN	PAPER TOWEL RECEPTOR	STS	STEEL STRUCTURE
BO	BY OWNER	EC	ELECTRIC CABINET	GPDW	GYPSUM DRYWALL	MEMB	MEMBRANE	PTR	PRINTER	SUPV	SUPERVISOR
BOF	BY OWNER FUTURE	EF	EACH FACE	GPL	GYPSUM LATH	MET	METAL	PVC	POLYVINYL CHLORIDE	SUSP	SUSPENDED
BOT	BOTTOM	EIFS	EXTERIOR INSULATION FINISH SYSTEM	GPM	GYPSUM PLASTER	MEZZ	MEZZANINE	PVMT	PAVEMENT	SW	SOUTHWEST
BR	BRICK	EJ	EXPANSION JOINT	GPT	GYPSUM TILE	MFD	METAL FLOOR DECKING			SW	STEEL WINDOW
BRG	BEARING	EL	ELEVATION	GYP	GYPSUM	MFR	MANUFACTURER	QT	QUARRY TILE	SWI	SWITCH
BRL	BRICK LEDGE	ELEC	ELECTRIC(AL)	GYP BD	GYPSUM BOARD	MGR	MANAGER			SWD	SOFTWOOD
BPL	BEARING PLATE	ELEV	ELEVATOR			MH	MANHOLE	R	RADIUS	SYM	SYMMETRICAL
BS	BOTH SIDES	EMERG	EMERGENCY	H	HIGH	MHC	MATERIAL HANDLING CONVEYOR	R	RISER	SYS	SYSTEM
BSMT	BASEMENT	ENCL	ENCLOSURE	HB	HOSE BIBB	MIN	MINIMUM	RA	RETURN AIR		
BTWN	BETWEEN	ENTR	ENTRANCE	HBD	HARDBOARD	MR	MIRROR	RAD	RADIATION	T	TREAD
BUR	BUILT UP ROOFING	EO	ELECTRICAL OUTLET	HC	HANDICAPPED	MSC	MISCELLANEOUS	RB	RESILIENT BASE	T	TOP
BVL	BEVELED	EP	EXPLOSION PROOF	HC	HOLLOW CORE	MLD	MOLDING/MOULDING	RB	RUBBER BASE	TAN	TANGENT
BW	BOTH WAYS	EQ	EQUAL	HD	HAND DRYER	MM	MILLIMETER(S)	RBT	RUBBER TILE	TB	TOWEL BAR
		EQUIP	EQUIPMENT	HD	HEAVY DUTY	MO	MASONRY OPENING	RCP	REINFORCED CONCRETE PIPE	TC	TIME CLOCK
C	CHANNEL	ES	END SECTION	HDCP	HANDICAPPED	MOD	MODULAR	RD	ROOF DRAIN	TC	TERRA COTTA
C DISP	CUP DISPENSER	ESC	ESCALATOR	HDR	HEADER	MONO	MONOLITHIC	RE	RELOCATE EXISTING	TD	TOWEL DISPENSER
CAB	CABINET	EST	ESTIMATE	HDRL	HANDRAIL	MPC	METAL PAN CEILING	REC	RECESSED	TDR	TRENCH DRAIN
CCTV	CLOSED CIRCUIT TELEVISION	EWC	ELECTRIC WATER COOLER	HDW	HARDWARE	MPU	MULTIPURPOSE UNIT	REF	REFERENCE	TEL	TELEPHONE
CDR	COILING DOOR	EWF	ELECTRIC WATER FOUNTAIN	HGT	HEAD JOINT	MR	MOISTURE RESISTANT	REFRG	REFRIGERATOR	TEMP	TEMPORARY
CER	CERAMIC	EWH	ELECTRIC WATER HEATER	HM	HOLLOW METAL	MS	MOP SINK	REG	REGISTER	TER	TERRAZZO
CFT	CUBIC FOOT(FEET)	EXA	EXHAUST AIR	HORIZ	HORIZONTAL	MTD	MOUNTED	REINF	REINFORCE(D)(ING)	T&G	TONGUE AND GROVE
CG	CORNER GUARD	EXC	EXCAVATE (ED, ION)	HP	HIGH POINT	MTL	METAL	REM	REMOVE	TH	THRESHOLD
CGL	COILING GRILLE	EXF	EXHAUST FAN	HR	HOUR	MET	MOTOR	REQ	REQUIRED	THK	THICK
CH	CEILING HEIGHT	EXH	EXHAUST HOOD	HDBL	HANDRAIL	MUL	MULLION	RES	RESILIENT	TKBD	TACKBOARD
CHBD	CHALKBOARD	EXIST	EXISTING	HT	HEIGHT			RET	RETAINING	TKS	TACKSTRIP
CHK	COAT HOOK	EXP	EXPANSION	HTG	HEATING	N	NORTH	RET	RETURN	TOC	TOP OF CURB
CI	CAST IRON	EXS	EXTRA STRONG	HTR	HEATER	NA	NOT APPLICABLE	REV	REVERSE	TOL	TOLERENCE
CJ	CONTROL JOINT	EXT	EXTERIOR	HVAC	HEATING/VENTILATING/AIR CONDITIONING	NAT	NATURAL	REV	REVISE/REVISION	TPD	TOILET PAPER HOLDER
CK	CAULKING, CAULKE(ING)			HW	HOT WATER	NIC	NOT IN CONTRACT	RF	RESILIENT FLOOR	TPTN	TOILET PARTITION
CL	CENTERLINE	FA	FIRE ALARM	HWH	HOT WATER HEATER	NO	NUMBER	REL	REFLECT(ED)	TR	TRANSOM
CLA	CLASS	FAIR	FRESH AIR			NOM	NOMINAL	RH	ROOF HATCH	TRANSF	TRANSFORMER
CLG	CEILING	FAS	FASTEN, FASTENER	IC	INTERCOM	NR	NOISE REDUCTION	RH	RIGHT HAND	TS	TUBE SECTION
CLR	CLEAR(ANCE)	FB	FACE BRICK	ID	INSIDE DIAMETER	NRC	NOISE REDUCTION COEFFICIENT	RL	RAIN LEADER	TSL	TOP OF SLAB
CLS	CLOSURE	FBD	FIBERBOARD	IG	ISOLATED GROUND	NT	NOTE	RM	ROOM	TST	TOP OF SHELF
CO	CLEAN OUT	FBKT	FIRE BLANKET	IN	INCH(ES)	NTS	NOT TO SCALE	RO	ROUGH OPENING	TV	TELEVISION
CSO	CASED OPENING	FBO	FURNISHED BY OTHERS	INCL	INCLUDED			ROW	RIGHT OF WAY	TOW	TOP OF WALL
COL	COLUMN	FD	FLOOR DRAIN	INSC	INSULATING CONCRETE	OA	OVERALL	RS	ROUGH SLAB	TYP	TYPICAL
COMB	COMBINATION	FDN	FOUNDATION	INSF	INSULATING FILL	OBS	OBSCURE	RT	RESILIENT TILE		
CONC	CONCRETE	FDV	FIRE DEPARTMENT VALVE	INSUL	INSULATE/INSULATION	OC	ON CENTER	RVS	REVERSE	UC	UNDERCUT
CONF	CONFERENCE	FE	FIRE EXTINGUISHER	INT	INTERIOR	OD	OUTSIDE DIAMETER	RVT	RIVET	UFD	UNDERFLOOR DUCT
CONN	CONNECT(ED/ION)	FEC	FIRE EXTINGUISHER CABINET	INV	INVERT	OFF	OFFICE	RWC	RAIN WATER CONDUCTOR	UNF	UNFINISHED
CONST	CONSTRUCTION	FF	FINISH FLOOR	IPS	IRON PIPE SIZE	OH	OVERHEAD	RWL	RAIN WATER LEADER	UG	UNDERGROUND
CONT	CONTINUOUS OR CONTINUE	FF	FACTORY FINISH(ED)	ISO	ISOLATION	OHMS	OVAL HEAD MACHINE SCREW			UH	UNIT HEATER
CONTR	CONTRACTOR(S)	FFE	FINISH FLOOR ELEVATION			OHWS	OVAL HEAD WOOD SCREW	S	SOUTH	UNO	UNLESS NOTED OTHERWISE
CMU	CONCRETE MASONRY UNIT	FFL	FINISH FLOOR LINE	JAN	JANITOR	OJ	OPEN WEB JOIST	SC	SOLID CORE	UR	URINAL
COORD	COORDINATE	FGL	FIBERGLASS	JB	JUNCTION BOX	OP	OPERABLE PARTITION	SCH	SCHEDULE	US	UTILITY SHELF
COR	CORRIDOR	FGS	FOAM GASKET SEAL	JST	JOIST	OPER	OPERATOR	SCN	SCREEN	UTL	UTILITY
CORR	CORRUGATED	FH	FIRE HOSE	JT	JOINT	OPNG	OPENING	SCT	STRUCTURL CLAY TILE		
CPPL	CEMENT PLASTER (PORTLAND)	FHC	FIRE HOSE CABINET			OPP	OPPOSITE	SD	STORM DRAIN	VAR	VARNISH
CPT	CARPET (ED)	FHWS	FLAT HEAD MACHINE SCREW	KCPL	KEEN CEMENT PLASTER	OPH	OPPOSITE HAND	SD	SHOWER DRAIN	VB	VINYL BASE
CRS	COURSE(S)	FHP	FULL HEIGHT PARTITION	KIT		OPS	OPPOSITE SURFACE	SD	SMOKE DETECTOR	VBR	VAPOR BARRIER
										VC	VALVE CABINET
										VCT	VINYL COMPOSITION TILE
										VENT	VENTILATION
										VERT	VERTICAL
										VEST	VESTIBULE
										VIN	VINYL
										VJT	V-JOINT (ED)
										VT	VINYL TILE
										VTR	VENT THROOGH ROOF
										VWC	VINYL WALLCOVERING
										W	WEST
										W	WIDTH/WIDE
										W	WIDE FLANGE
										W/	WITH
										W/O	WITHOUT
										WB	WOOD BASE
										WC	WATER CLOSET
										WC	WALL COVERING
										WD	WOOD
										WDW	WINDOW
										WG	WIRE GLASS
										WGD	WALL GUARD
										WH	WATER HEATER
										WH	WALL HYDRANT
										WHCH	WHEELCHAIR
										WI	WROUGHT IRON
										WIN	WINDOW
										WM	WIRE MESH
										WP	WATERPROOF(ING)
										WPT	WORKING POINT
										WR	WASTE RECEPTACLE
										WR	WATER RESISTANT
										WR	WATER REPELLENT
										WS	WATERSTOP
										WS	WEATHERSEAL
										WSCT	WAINSCOT
										WT	WEIGHT
										WT	WINDOW TREATMENT
										WTW	WALL TO WALL
										WW	WOOD WINDOW
										WWF	WELDED WIRE FABRIC

INDEX OF DRAWINGS

DRAWINGS:

0.01 COVER SHEET
0.02 DATA SHEET

LS-1.00 LIFE SAFETY PLAN

ARCHITECTURAL

A-1.00 FLOOR PLAN - NOTES
A-1.10 FLOOR PLAN - DIMENSIONS
A-1.12 FLOOR PLAN - PARTITION TYPES
A-2.10 FLOOR PLAN - REFLECTED CEILING
A-3.00 ROOF PLAN
A-4.00 MATERIAL FINISH SCHEDULE, CODE SCHEDULES
A-5.00 DOOR SCHEDULE, DOOR, FRAME, STOREFRONT AND WINDOW ELEVATIONS
A-6.00 BUILDING ELEVATIONS
A-6.01 BUILDING ELEVATIONS
A-7.00 WALL SECTIONS
A-7.01 WALL SECTIONS
A-7.02 WALL SECTIONS
A-7.03 WALL SECTIONS
A-8.00 DETAILS - HEADS, JAMBS, SILLS
A-8.01 DETAILS - HEADS, JAMBS, SILLS
A-8.10 DETAILS - EXTERIOR
A-8.20 DETAILS - INTERIOR
A-8.30 DETAILS - ROOF
A-8.31 DETAILS - ROOF
A-8.50 DETAILS - FIRE RATED
A-9.00 INTERIOR ELEVATIONS
A-9.01 INTERIOR ELEVATIONS
A-10.00 MILLWORK DETAILS
A-10.01 MILLWORK DETAILS
A-10.02 MILLWORK DETAILS

INTERIORS

I-1.10 FINISH PLAN
I-2.10 FURNITURE/EQUIPMENT PLAN

STRUCTURAL

S-0.00 STRUCTURAL GENERAL NOTES
S-0.01 STRUCTURAL GENERAL NOTES
S-1.00 FOUNDATION AND SLAB ON GRADE PLAN
S-3.00 ROOF FRAMING PLAN
S-8.00 SECTIONS AND DETAILS
S-8.01 SECTIONS AND DETAILS
S-8.02 SECTIONS AND DETAILS
S-8.03 SECTIONS AND DETAILS
S-8.04 SECTIONS AND DETAILS

PLUMBING

P1.0 FLOOR PLAN - PLUMBING
P2.0 SCHEDULE, DETAILS AND RISERS - PLUMBING

MECHANICAL

M1.0 FLOOR PLAN - HVAC
M2.0 DETAILS - HVAC
M3.0 SCHEDULES - HVAC

ELECTRICAL

E0.1 LEGEND & FIXTURE SCHEDULE
E1.0 SITE PLAN - ELECTRICAL
E2.0 LIGHTING FLOOR PLAN - ELECTRICAL
E3.0 POWER FLOOR PLAN - ELECTRICAL
E4.0 SYSTEMS FLOOR PLAN - ELECTRICAL
E5.0 DETAILS - ELECTRICAL
E6.0 DETAILS - ELECTRICAL
E7.0 RISER DIAGRAMS & SCHEDULES - ELECTRICAL

FIRE EXTINGUISHER REQUIREMENTS

OCCUPANCY HAZARD CLASSIFICATION	CLASS 'A'	
TYPE OF HAZZARD	LOW	
EXTINGUISER PROVIDED	4-A,60-BC	
	REQUIRED	PROVIDED
MIN. RATED SINGLE EXTINGUISHER (A)	2-A	4-A
MAX. FLOOR AREA PER UNIT OF A	3,000 SQ. FT	395 SQ. FT.
MAX. FLOOR AREA FOR EXTINGUISHER (A)	11,250 SQ. FT.	1582 SQ. FT.
MAX. TRAVEL DISTANCE TO EXTINGUISHER (A)	75 FT.	59 FT.
MIN. EXTINGUISHER RATING (B)	5-B OR 10-B	NA
MAX. TRAVEL DISTANCE (B)	30 FT. OR 50 FT.	NA
MIN. EXTINGUISHER RATING (C)	2-A	4-A
MAX. TRAVEL DISTANCE (C)	75 FT.	59 FT.

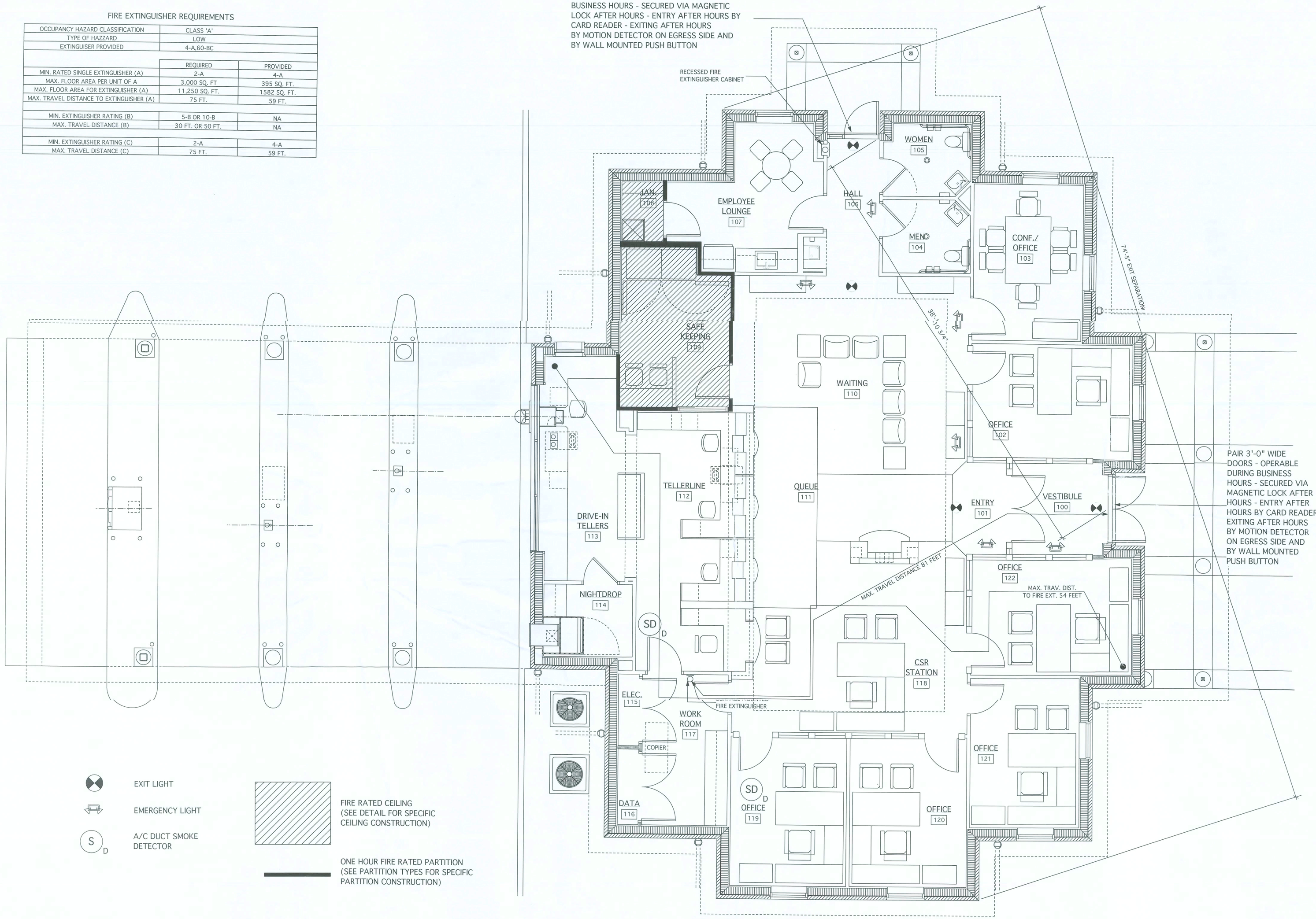

DESIGN SERVICES INCORPORATED
1778 N. PARK AVENUE, SUITE 100, MAITLAND, FL 32751,
TELEPHONE(407) 629-5755
LICENSE NO. F00061
ARCHITECTURE INTERIOR DESIGN SPACE PLANNING

WEST OFFICE
(NEW BRANCH BANK)
LAKE CITY, FLORIDA

PEOPLES STATE BANK

GENERAL NOTES

1 2 3 4

INTERIOR ELEVATION KEY

NORTH
ACTUAL
PLAN

MARK	DATE	REVISIONS

COMM. NO:	06003.00	DRAWN:	KLP
DATE:	02/15/06	CHECKED:	ELM
SCALE:	AS NOTED		
FILE:	06003.00-LIFE SAFETY PLAN		

LIFE SAFETY PLAN

SEAL

ARCHITECT/CONSULTANT
EDDIE L. MUSE
JUN 07 2006
LICENSE NO. AR-12112

SHEET NUMBER
LS-1.00

06003.00-LIFE SAFETY PLAN Tue, May 23, 2006 1:54:31 PM

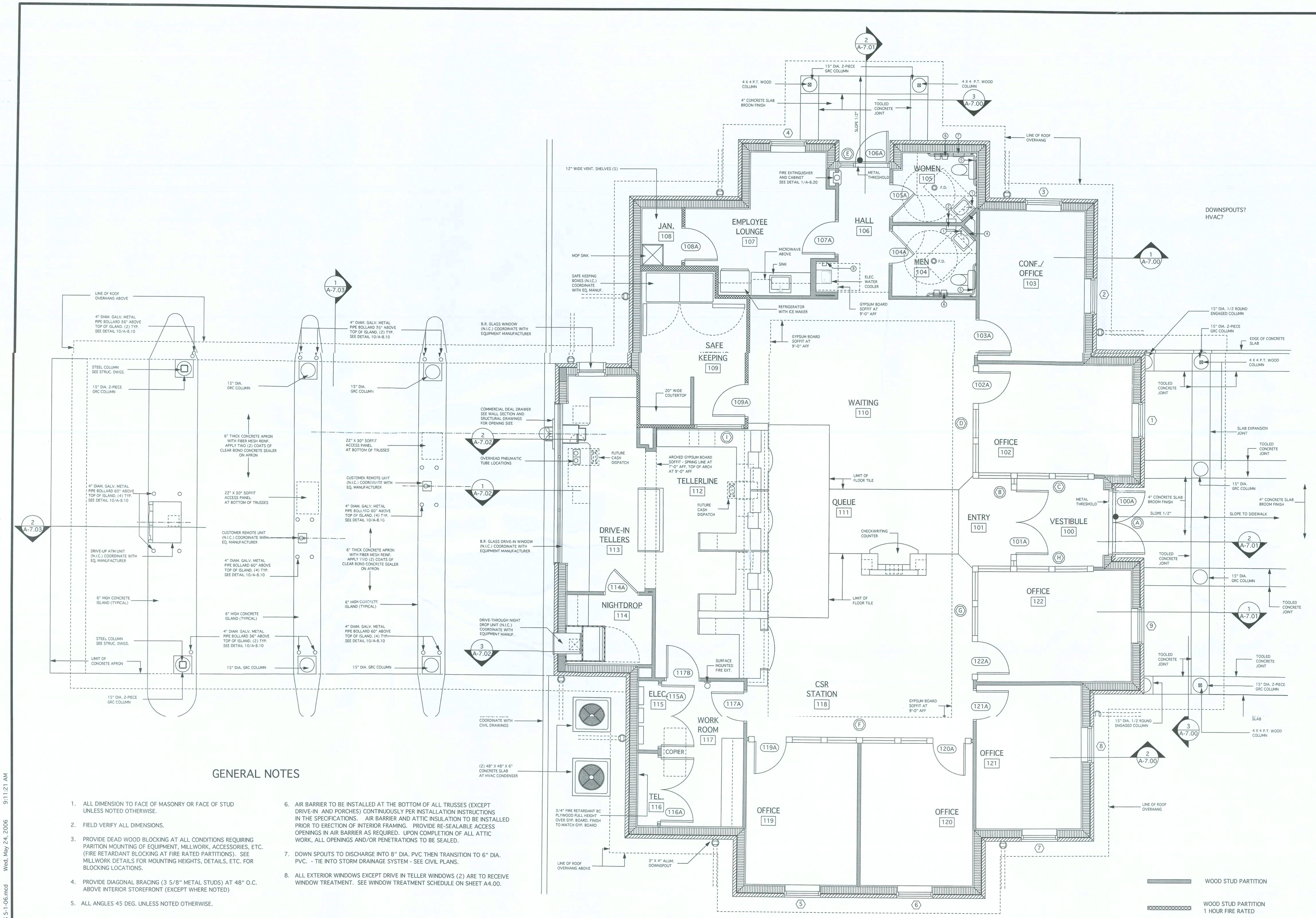

GENERAL NOTES

1. ALL DIMENSION TO FACE OF MASONRY OR FACE OF STUD UNLESS NOTED OTHERWISE.
2. FIELD VERIFY ALL DIMENSIONS.
3. PROVIDE DEAD WOOD BLOCKING AT ALL CONDITIONS REQUIRING PARTITION MOUNTING OF EQUIPMENT, MILLWORK, ACCESSORIES, ETC. (FIRE RETARDANT BLOCKING AT FIRE RATED PARTITIONS). SEE MILLWORK DETAILS FOR MOUNTING HEIGHTS, DETAILS, ETC. FOR BLOCKING LOCATIONS.
4. PROVIDE DIAGONAL BRACING (3 5/8" METAL STUDS) AT 48" O.C. ABOVE INTERIOR STOREFRONT (EXCEPT WHERE NOTED)
5. ALL ANGLES 45 DEG. UNLESS NOTED OTHERWISE.
6. AIR BARRIER TO BE INSTALLED AT THE BOTTOM OF ALL TRUSSES (EXCEPT DRIVE-IN AND PORCHES) CONTINUOUSLY PER INSTALLATION INSTRUCTIONS IN THE SPECIFICATIONS. AIR BARRIER AND ATTIC INSULATION TO BE INSTALLED PRIOR TO ERECTION OF INTERIOR FRAMING. PROVIDE RE-SEALABLE ACCESS OPENINGS IN AIR BARRIER AS REQUIRED. UPON COMPLETION OF ALL ATTIC WORK, ALL OPENINGS AND/OR PENETRATIONS TO BE SEALED.
7. DOWN SPOUTS TO DISCHARGE INTO 8" DIA. PVC THEN TRANSITION TO 6" DIA. PVC. - TIE INTO STORM DRAINAGE SYSTEM - SEE CIVIL PLANS.
8. ALL EXTERIOR WINDOWS EXCEPT DRIVE IN TELLER WINDOWS (2) ARE TO RECEIVE WINDOW TREATMENT. SEE WINDOW TREATMENT SCHEDULE ON SHEET A4.00.

FLOOR PLAN - NOTES

SCALE: 1/4" = 1'-0"

06003.00-FLOOR PLANS 5-1-06.mcd Wed, May 24, 2006 9:11:21 AM

DESIGN SERVICES INCORPORATED
1778 N. PARK AVE., SUITE 100, MAITLAND, FL 32751,
TELEPHONE(407) 626-5755
LICENSE NO. F00061
ARCHITECTURE INTERIOR DESIGN SPACE PLANNING

WEST OFFICE
(NEW BRANCH BANK)
LAKE CITY, FLORIDA

PEOPLES STATE BANK

GENERAL NOTES

INTERIOR ELEVATION KEY

NORTH
ACTUAL
PLAN

MARK	DATE	REVISIONS

COMM. NO:	06003.00	DRAWN:	KLP
DATE:	02/15/06	CHECKED:	ELM
SCALE:	1/4" = 1'-0"	© 2006	
FILE:	06003.00-FLOOR PLANS 5-1-06.mcd		

FLOOR PLAN

NOTES

SEAL

ARCHITECT/CONSULTANT
EDDIE L. MUSE
JUN 07 2006
LICENSE NO. AR-12112

SHEET NUMBER
A-1.10

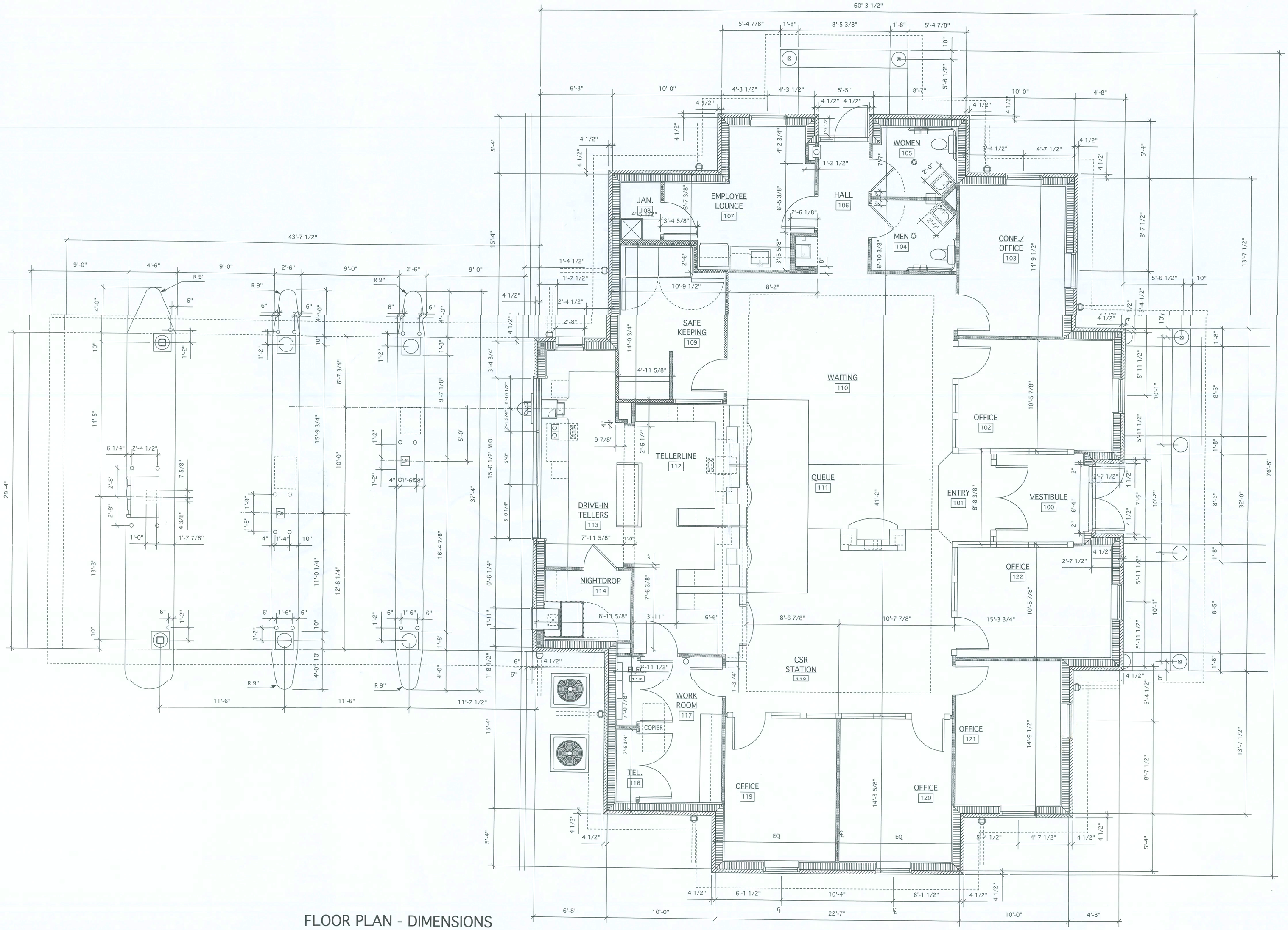

FLOOR PLAN - DIMENSIONS

SCALE: 1/4" = 1'-0"

06003.00-FLOOR PLANS 5-1-06.mcd Wed, May 24, 2006 9:14:11 AM

DESIGN SERVICES INCORPORATED
1778 N. PARK AVE., SUITE 100, MAITLAND, FL 32751,
TELEPHONE(407) 626-5755
LICENSE NO. F00061
ARCHITECTURE
INTERIOR DESIGN
SPACE PLANNING

WEST OFFICE
(NEW BRANCH BANK)
LAKE CITY, FLORIDA

PEOPLES STATE BANK

GENERAL NOTES

1. ALL DIMENSION TO FACE OF MASONRY OR FACE OF STUD UNLESS NOTED OTHERWISE.
2. FIELD VERIFY ALL DIMENSIONS.
3. PROVIDE DEAD WOOD BLOCKING AT ALL CONDITIONS REQUIRING PARITION MOUNTING OF EQUIPMENT, MILLWORK, ACCESSORIES, ETC. (FIRE RETARDANT BLOCKING AT FIRE RATED PARTITIONS). SEE MILLWORK DETAILS FOR MOUNTING HEIGHTS, DETAILS, ETC. FOR BLOCKING LOCATIONS.
4. PROVIDE DIAGONAL BRACING (3 5/8" METAL STUDS) AT 48" O.C. ABOVE INTERIOR STOREFRONT.

1 2 3 4

INTERIOR ELEVATION KEY

NORTH
ACTUAL
PLAN

MARK	DATE	REVISIONS

COMM. NO:	06003.00	DRAWN:	KLP
DATE:	02/15/06	CHECKED:	ELM
SCALE:	1/4" = 1'-0"	© 2006	
FILE:	06003.00-FLOOR PLANS 5-1-06.mcd		

FLOOR PLAN

DIMENSIONS

SEAL

ARCHITECT/CONSULTANT
EDDIE L. MUSE
JUN 07 2006
LICENSE NO. AR-12112

SHEET NUMBER
A-1.11

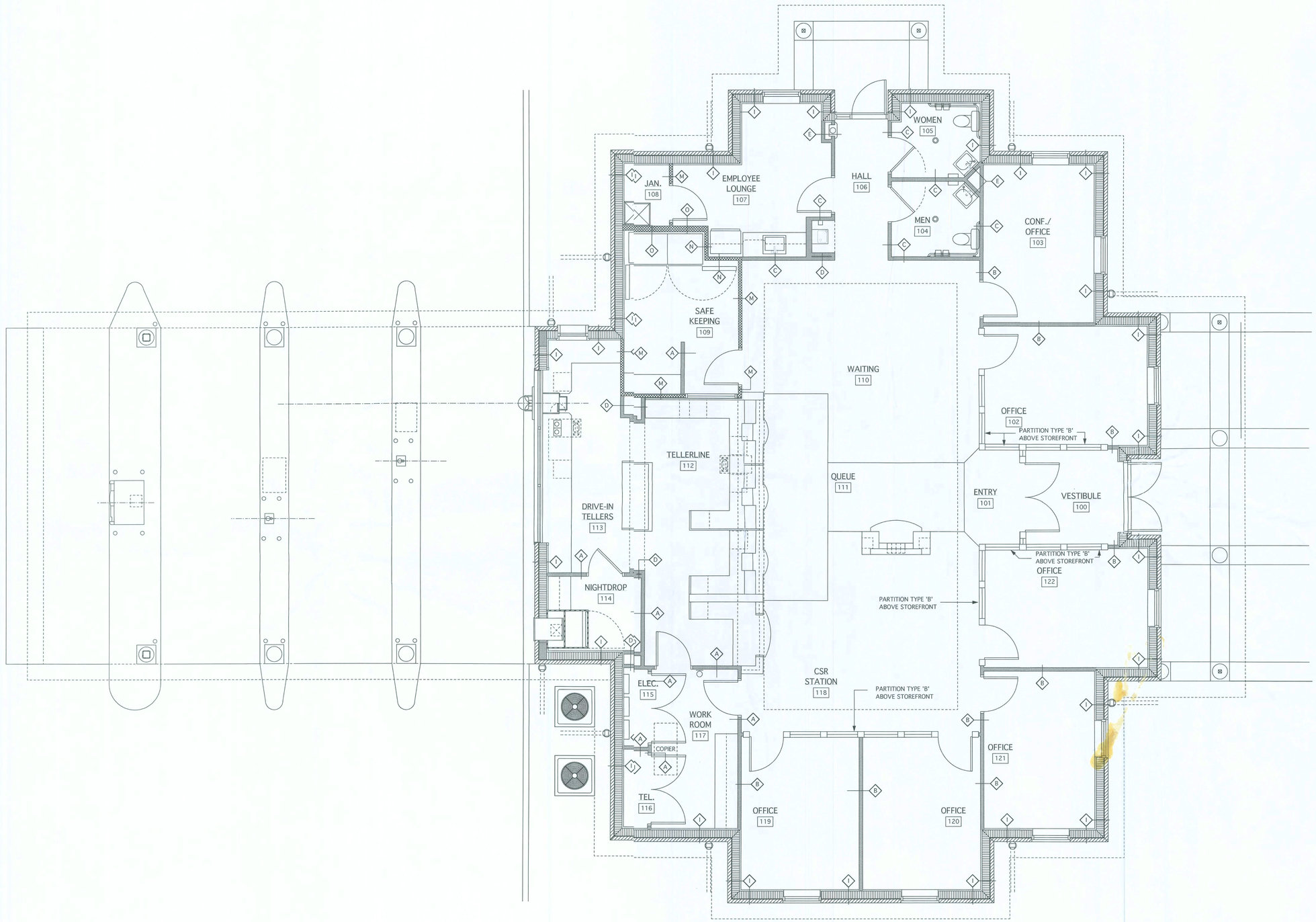

FLOOR PLAN - PARTITION TYPES

SCALE: 1/4" = 1'-0"

06003.00-FLOOR PLANS 5-1-06.mcd Wed, May 24, 2006 9:15:18 AM

DESIGN SERVICES INCORPORATED
1778 N. PARK AVE., SUITE 100, MAITLAND, FL 32751,
TELEPHONE(407) 626-5755
LICENSE NO. F00061
ARCHITECTURE
INTERIOR DESIGN
SPACE PLANNING

WEST OFFICE
(NEW BRANCH BANK)
LAKE CITY, FLORIDA

PEOPLES STATE BANK

GENERAL NOTES

1 2 3 4

INTERIOR ELEVATION KEY

NORTH
ACTUAL
PLAN

MARK	DATE	REVISIONS

COMM. NO:	06003.00	DRAWN:	KLP
DATE:	02/13/06	CHECKED:	ELM
SCALE:	1/4"= 1'-0"	© 2006	
FILE:	06003.00-FLOOR PLANS 5-1-06.mcd		

FLOOR PLAN

PARTITION TYPES

SEAL

ARCHITECT/CONSULTANT

EDDIE L. MUSE
JUN 07 2006
LICENSE NO. AR-12112

SHEET NUMBER

A-1.12

LEGEND

- ACOUSTICAL LAY-IN CEILING - NEW OR EXISTING - SEE CEILING DEMOLITION PLAN FOR EXISTING
- 2 X 4 LAY-IN FLUORESCENT LIGHT FIXTURE
- 2 X 4 SURFACE MOUNTED FLUORESCENT LIGHT FIXTURE
- 1 X 4 SURFACE MOUNTED FLUORESCENT LIGHT FIXTURE
- 2 X 4 LAY-IN FLUORESCENT INDIRECT LIGHT FIXTURE
- RECESSED DOWN LIGHT FIXTURE
- SURFACE MOUNTED LIHT FIXTURE
- EXIT LIGHT FIXTURE
- CHANDELIER
- HVAC SUPPLY GRILLE
- HVAC RETURN AIR GRILLE
- CEILING/SOFFIT MOUNTED FRESH AIR SUPPLY GRILLE
- EXHAUST FAN GRILLE

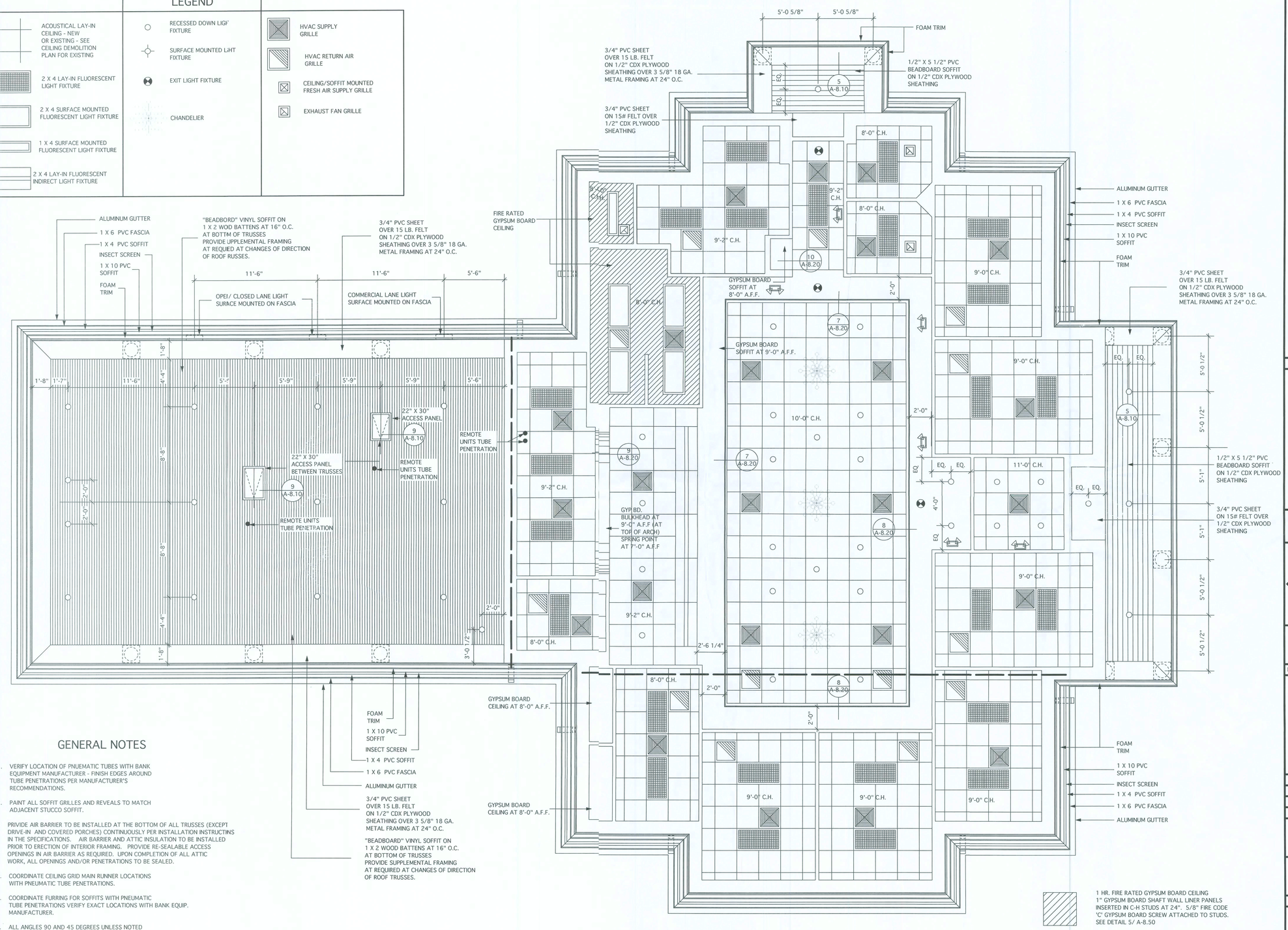

GENERAL NOTES

1. VERIFY LOCATION OF PNUEMATIC TUBES WITH BANK EQUIPMENT MANUFACTURER - FINISH EDGES AROUND TUBE PENETRATIONS PER MANUFACTURER'S RECOMMENDATIONS.
2. PAINT ALL SOFFIT GRILLES AND REVEALS TO MATCH ADJACENT STUCCO SOFFIT.
3. PRIVIDE AIR BARRIER TO BE INSTALLED AT THE BOTTOM OF ALL TRUSSES (EXCEPT DRIVE-IN AND COVERED PORCHES) CONTINUOUSLY PER INSTALLATION INSTRUCTINS IN THE SPECIFICATIONS. AIR BARRIER AND ATTIC INSULATION TO BE INSTALLED PRIOR TO ERECTION OF INTERIOR FRAMING. PROVIDE RE-SEALABLE ACCESS OPENINGS IN AIR BARRIER AS REQUIRED. UPON COMPLETION OF ALL ATTIC WORK, ALL OPENINGS AND/OR PENETRATIONS TO BE SEALED.
4. COORDINATE CEILING GRID MAIN RUNNER LOCATIONS WITH PNEUMATIC TUBE PENETRATIONS.
5. COORDINATE FURRING FOR SOFFITS WITH PNEUMATIC TUBE PENETRATIONS VERIFY EXACT LOCATIONS WITH BANK EQUIP. MANUFACTURER.
6. ALL ANGLES 90 AND 45 DEGREES UNLESS NOTED OTHERWISE.
7. PROVIDE VINYL SOFFIT MANUFACTURER'S STANDARD 'J' AND 'T' MOLDING AT ALL WALL/SOFFIT AND SOFFIT/SOFFIT JOINTS, RESPECTIVELY.

1 HR. FIRE RATED GYPSUM BOARD CEILING
1" GYPSUM BOARD SHAFT WALL LINER PANELS INSERTED IN C-H STUDS AT 24". 5/8" FIRE CODE 'C' GYPSUM BOARD SCREW ATTACHED TO STUDS. SEE DETAIL 5/ A-8.50

DRAFTSTOPPING - ONE LAYER 1/2" GYPSUM BOARD FROM BOTTOM OF ROOF SHEATHING TO BOTTOM OF TRUSSES

REFLECTED CEILING PLAN

SCALE: 1/4" = 1'-0"

06003.00-FLOOR PLANS 5-1-06.mcd Wed, May 24, 2006 9:19:45 AM

DESIGN SERVICES INCORPORATED
1778 N. PARK AVE., SUITE 100, MAITLAND, FL 32751,
TELEPHONE(407) 626-5755
LICENSE NO. F00061
ARCHITECTURE INTERIOR DESIGN SPACE PLANNING

PEOPLES STATE BANK

WEST OFFICE
(NEW BRANCH BANK)
LAKE CITY, FLORIDA

GENERAL NOTES

INTERIOR ELEVATION KEY

NORTH
ACTUAL
PLAN

MARK	DATE	REVISIONS

COMM. NO:	06003.00	DRAWN:	KLP
DATE:	02/15/06	CHECKED:	ELM
SCALE:	1/4"= 1'-0"	© 2006	
FILE:	06003.00-FLOOR PLANS 5-1-06.mcd		

REFLECTED CEILING PLAN

SEAL

ARCHITECT/CONSULTANT

EDDIE L. MUSE
JUN 07 2006
LICENSE NO. AR-12112

SHEET NUMBER

A-2.10

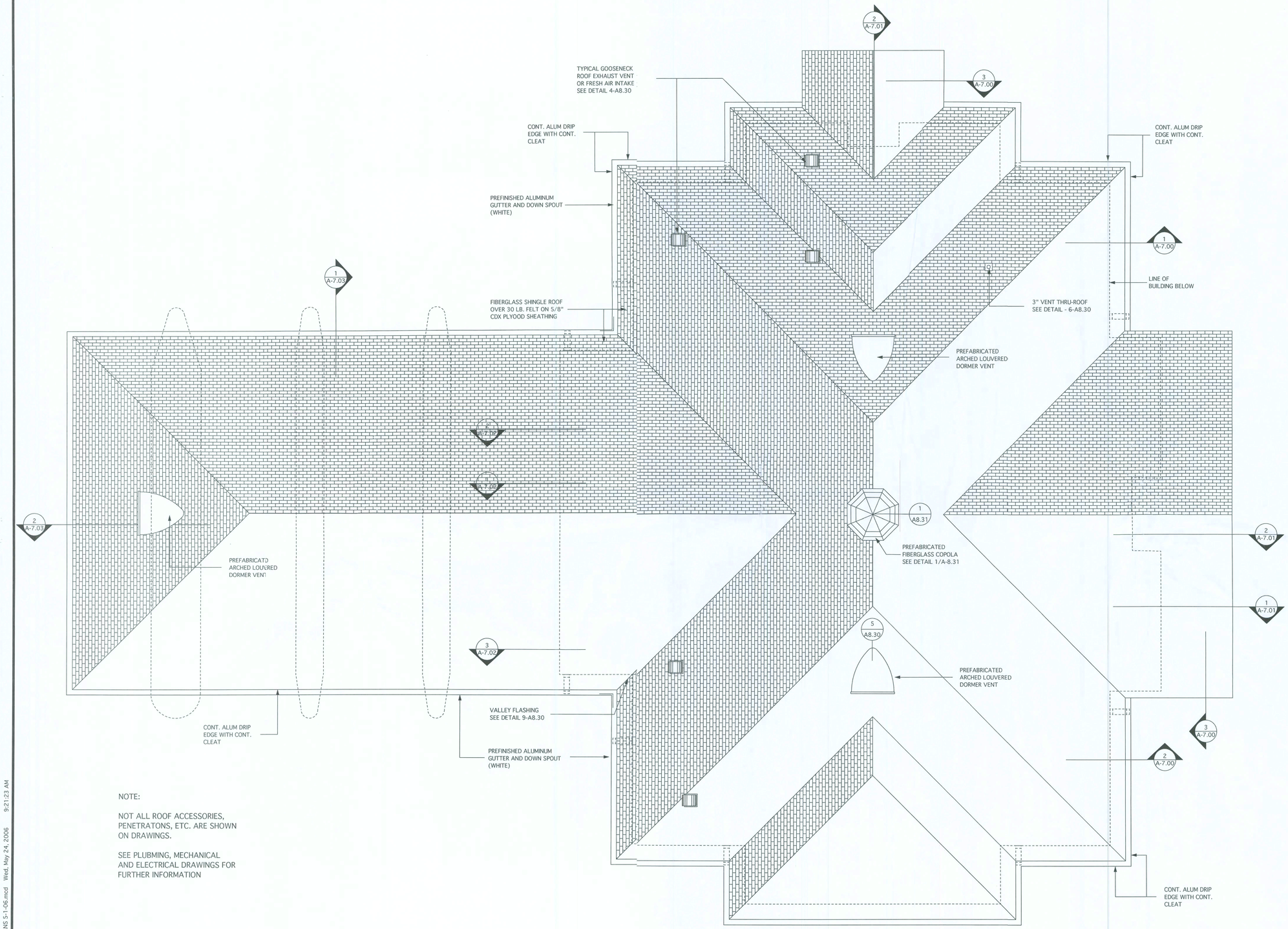

NOTE:

NOT ALL ROOF ACCESSORIES, PENETRATONS, ETC. ARE SHOWN ON DRAWINGS.

SEE PLUBMING, MECHANICAL AND ELECTRICAL DRAWINGS FOR FURTHER INFORMATION

ROOF PLAN

SCALE: 1/4" = 1'-0"

06003.00-FLOOR PLANS 5-1-06.mcd Wed, May 24, 2006 9:21:23 AM

DESIGN SERVICES INCORPORATED
1778 N. PARK AVE., SUITE 100, MAITLAND, FL 32751,
TELEPHONE(407) 626-5755
LICENSE NO. F00061
ARCHITECTURE
INTERIOR DESIGN
SPACE PLANNING

WEST OFFICE
(NEW BRANCH BANK)
LAKE CITY, FLORIDA

PEOPLES STATE BANK

GENERAL NOTES

INTERIOR ELEVATION KEY

NORTH
ACTUAL
PLAN

MARK	DATE	REVISIONS

COMM. NO:	06003.00	DRAWN:	KLP
DATE:	02/15/06	CHECKED:	ELM
SCALE:	1/4" = 1'-0"	© 2006	
FILE:	06003.00-FLOOR PLANS 5-1-06.mcd		

ROOF PLAN

SIAL

ARCHITECT/CONSULTANT

EDDIE L. MUSE
JUN 07 2006
LICENSE NO. AR-12112

SHEET NUMBER

A-3.00

MATERIAL FINISH SCHEDULE

NO.	SPACE	FLOOR BASE MAT.	FLOOR FINISH MAT.	FLOOR FINISH CODE	BASE BASE MAT.	BASE FINISH MAT.	BASE FINISH CODE	NORTH WAL BASE MAT.	NORTH WAL FINISH MAT.	NORTH WAL FINISH CODE	EAST WALL BASE MAT.	EAST WALL FINISH MAT.	EAST WALL FINISH CODE	SOUTH WALL BASE MAT.	SOUTH WALL FINISH MAT.	SOUTH WALL FINISH CODE	WEST WALL BASE MAT.	WEST WALL FINISH MAT.	WEST WALL FINISH CODE	CEILING BASE MAT.	CEILING FINISH MAT.	CEILING FINISH CODE	HEIGHT	NOTES
100	VESTIBULE	CONC.	TILE	T-1	GPDW	TILE	B-2	GPDW	PINT	P-1	GPDW	PAINT	P-1	----	----	----	GPDW	PAINT	P-1	ACT	F.F.	ACT-1	11'0"	
101	ENTRY	CONC.	TILE	T-1	GPDW	TILE	B-2	----	---	----	----	----	----	----	----	----	----	----	----	GYP BD	PAINT	P-3	9'0"	3
102	OFFICE	CONC.	CPT	CPT-1 CPT-2	GPDW	VINYL	B-1	GPDW	PINT	P-1	GPDW	PAINT	P-1	GPDW	PAINT	P-1	GPDW	PAINT	P-1	ACT	F.F.	ACT-1	9'0"	5
103	CONF./OFFICE	CONC.	CPT	CPT-1 CPT-2	GPDW	VINYL	B-1	GPDW	PINT	P-1	GPDW	PAINT	P-1	GPDW	VWC	VWC-1	GPDW	PAINT	P-1	ACT	F.F.	ACT-1	9'0"	5
104	MEN	CONC.	VCT	VCT-1	GPDW	VINYL	B-1	GPDW	WC	VWC-2	GPDW	VWC	VWC-2	GPDW	VWC	VWC-2	GPDW	VWC	VWC-2	ACT	F.F.	ACT-2	8'0"	
105	WOMEN	CONC.	VCT	VCT-1	GPDW	VINYL	B-1	GPDW	PINT	P-1	GPDW	VWC	VWC-3	GPDW	PAINT	P-1	GPDW	PAINT	P-1	ACT	F.F.	ACT-2	8'0"	
106	HALL	CONC.	CPT	CPT-1 CPT-2	GPDW	VINYL	B-1	GPDW	WC	VWC-1	----	----	----	GPDW	VWC	VWC-1	----	----	----	ACT GYP BD	F.F. VWC	ACT-2 VWC-'	9'2" 8'0"	3,5
107	EMPLOYEE LOUNGE	CONC.	VCT	VCT-1	GPDW	VINYL	B-1	GPDW	PINT	P-1	GPDW	PAINT	P-1	GPDW	PAINT	P-1	GPDW	PAINT	P-1	ACT	F.F.	ACT-2	9'2"	
108	JANITOR'S CLOSET	CONC.	VCT	VCT-1	GPDW	VINYL	B-1	GPDW	PINT	P-1	GPDW	PAINT	P-1	GPDW	PAINT	P-1	GPDW	PAINT	P-1	GYP BD	PAINT	P-3	8'0"	
109	SAFE KEEPING	CONC.	CPT	CPT-1 CPT-2	GPDW	VINYL	B-1	GPDW	PINT	P-1	GPDW	PAINT	P-1	GPDW	PAINT	P-1	GPDW	PAINT	P-1	ACT GYP BD	F.F. PAINT	ACT-1 P-3	8'0" 9'0"	3,5
110	WAITING	CONC.	CPT	CPT-1 CPT-2	GPDW	VINYL	B-1	GPDW	WC	VWC-1	----	----	----	GPDW	VWC	VWC-1	GPDW	VWC	VWC-1	ACT GYP BD	F.F. PAINT	ACT-1 P-3	10'0" 9'0"	3,5
111	QUEUE	CONC.	TILE	T-1	GPDW	TILE	B-2	----	---	----	----	----	----	----	----	----	----	----	----	ACT	F.F.	ACT-1	10'0"	3
112	TELLERLINE	CONC.	CPT	CPT-1 CPT-2	GPDW	VINYL	B-1	----	---	----	GPDW	VWC	VWC-1	----	----	----	GPDW	VWC	VWC-1	ACT	F.F.	ACT-1	9'2"	3,5
113	DRIVE-IN TELLERS	CONC.	CPT	CPT-1 CPT-2	GPDW	VINYL	B-1	GPDW	WC	VWC-1	GPDW	PAINT	P-1	GPDW	PAINT	P-1	GPDW	VWC	VWC-1	ACT GYP BD	F.F. PAINT	ACT-1 P-3	9'2" 8'0"	3,5
114	NIGHTDROP	CONC.	VCT	VCT-1	GPDW	VINYL	B-1	GPDW	PINT	P-1	GPDW	PAINT	P-1	GPDW	PAINT	P-1	GPDW	PAINT	P-1	ACT	F.F.	ACT-2	8'0"	
115	ELECTRICAL CLOSET	CONC.	VCT	VCT-1	GPDW	VINYL	B-1	GPDW	PINT	P-1	GPDW	PAINT	P-1	GPDW	PAINT	P-1	GPDW	PAINT	P-1	GYP BD	PAINT	P-3	8'0"	
116	DATA CLOSET	CONC.	VCT	VCT-1	GPDW	VINYL	B-1	GPDW	PINT	P-1	GPDW	PAINT	P-1	GPDW	PAINT	P-1	GPDW	PAINT	P-1	GYP BD	PAINT	P-3	8'0"	
117	WORK ROOM	CONC.	VCT	VCT-1	GPDW	VINYL	B-1	GPDW	PINT	P-1	GPDW	PAINT	P-1	GPDW	PAINT	P-1	GPDW	PAINT	P-1	ACT	F.F.	ACT-2	8'0"	
118	CSR STATION	CONC.	CPT	CPT-1 CPT-2	GPDW	VINYL	B-1	GPDW	WC	VWC-1	GPDW	VWC	VWC-1	GPDW	VWC	VWC-1	----	----	----	ACT GYP BD	F.F. PAINT	ACT-1 P-3	10'0" 9'0"	3,5
119	OFFICE	CONC.	CPT	CPT-1 CPT-2	GPDW	VINYL	B-1	GPDW	WC	VWC-1	GPDW	PAINT	P-1	GPDW	PAINT	P-1	GPDW	PAINT	P-1	ACT	F.F.	ACT-1	9'0"	5
120	OFFICE	CONC.	CPT	CPT-1 CPT-2	GPDW	VINYL	B-1	GPDW	PINT	P-1	GPDW	PAINT	P-1	GPDW	VWC	VWC-1	GPDW	PAINT	P-1	ACT	F.F.	ACT-1	9'0"	5
121	OFFICE	CONC.	CPT	CPT-1 CPT-2	GPDW	VINYL	B-1	GPDW	PINT	P-1	GPDW	PAINT	P-1	GPDW	VWC	VWC-1	GPDW	PAINT	P-1	ACT	F.F.	ACT-1	9'0"	5
122	OFFICE	CONC.	CPT	CPT-1 CPT-2	GPDW	VINYL	B-1	GPDW	PINT	P-1	GPDW	PAINT	P-1	GPDW	PAINT	P-1	GPDW	PAINT	P-1	ACT	F.F.	ACT-1	9'0"	5

NOTES:

3. ALL VERTICAL SURFACES ON SOFFITS 9'-0" AFF OR ABOVE TO RECEIVE VINYL WLL COVERING.
   ALL HORIZONTAL SURFACES ON SOFFITS 9'-0" AFF OR ABOVE TO BE PAINTED P-.
   SOFFITS BELOW 9'-0" AFF. TO RECEIVE VINYL WALL COVERING ON BOTH
   HORIZONTAL AND VERTICAL SURFACES.
5. INSET CARPET BORDER WHERE NOTED ON FINISH PLAN.

WINDOW TREATMENT CODE SCHEDULE

CODE	PRODUCT DATA MANUFACTURER	PRODUCT/MODEL	DESIGN/PATTERN	MFR. NO.	PRODUCT CHARACTERISTICS COLOR	SIZE/WEIGHT	TYPE	FINISH	INSTALLATION METHODS MANUFACTURER	TYPE	COLOR	SIZE	METHOD	NOTES
WT-1	GRABER	WOOD BLINDS	---	1009	BRIGHT WITE	2"	---	FACTORY	---	---	---	---	INSIDE MT.	1

NOTES:
1. BLINDS TO BE INSTALLED "INSIDE MOUNTED".

ACCOUSTICAL TILE CODE SCHEDULE

CODE	PRODUCT DATA MANUFACTURER	PROD./MODEL	DES./PATTERN	MFR. NO.	PRODUCT CHARACTERISTICS COLOR	SIZE/WEIGHT	TYPE	FINISH	INSTALLATION INFORMATION GRID MFGR.	TYPE	COLOR	SIZE	METHOD	NOTES
ACT-1	USG	SANDRIFT	----	808	WHITE	¾" x 24" x 3/4"	TEGULAR	FACTORY	DONN-DX	----	WHITE	15/16	STANDARD	----
ACT-2	USG	RADAR	----	2120	WHITE	¾" x 24" x 5/8"	TEGULAR	FACTORY	DONN-DX	----	WHITE	15/16	STANDARD	----

PLASTIC LAMINATE CODE SCHEDULE

CODE	PRODUCT DATA MANUFACTURER	PROD./MODEL	DES/PATTERN	MFR. NO.	PRODUCT CHARACTERISTICS COLR	SIZE/WT	TYPE	FINISH	INSTALLATION INFORMATION MFR.	TYPE	COLOR	SIZE	MTHD	NOTES
PL-1	NEVAMAR	---	---	WC-4865N	INDIAN CERRY	---	HOR./VERT.	HI-LUSTER	---	---	---	---	---	TELLERLINE, CHECK CNTR
PL-2	WILSONART	#376	----	1812-35	DEEPSTAR OSSIL	---	HORIZONTAL	#35	---	---	---	---	---	COUNTERTOPS
PL-3	NEVAMAR	---	---	WC-4865N	INDIAN CERRY	---	HOR./VERT.	HI-LUSTER	---	---	---	---	---	TELLERLINE, CHECK CNTR
PL-4	NEVAMAR	----	----	FS-2-1T	CANYON ISURE TEXTUED	---	HORIZONTAL	MATTE	----	----	----	----	----	COUNTERTOPS

PAINT CODE SCHEDULE

CODE	PRODUCT DATA MANUFACTURER	PROD./MODEL	DES./PATTERN	MFR. NO.	PRODUCT CHARACTERISTICS COLOR	SIZE/WT	TYPE	FINISH	APPLICATION INFORMATION LOCATION	MATERIAL	MAT TYPE	SIZE	METHOD	NOTES
P-1	SHERWIN WILLIAMS	PAINT	----	SW 6105	DIVINE WHITE	----	LATEX	SATIN	WALLS	GYPBD.	----	----	----	----
P-2	SHERWIN WILLIAMS	PAINT	----	SW 7101	FUTON	----	LATEX	SEMI-GLOSS	DOORS, WD TRIM	WOOD	----	----	----	----
P-3	SHERWIN WILLIAMS	PAINT	----	SW 6105	DIVINE WHITE	----	LATEX	FLAT	SOFFITS GYP BD CLG	GYPBD.	----	----	----	----
P-4	SHERWIN WILLIAMS	PAINT	----	SW 6105	DIVINE WHITE	----	EPOXY	SEMI-GLOSS	JANITOR CLOSET	GYPBD.	----	----	----	----
P-5	SHERWIN WILLIAMS	PAINT	----	SW 7101	FUTON	----	ALYKD ENAMEL	SEMI-GLOSS	WD TRIM	WOOD	----	----	----	----
P-8	SHERWIN WILLIAMS	PAINT	----	SW 7005	PURE WHITE	----	ELASTOMERIC	FLAT	EXTERIOR TRIM	FOAM	----	----	----	----
P-9	SHERWIN WILLIAMS	PAINT	----	SW 7005	PURE WHITE	----	ELASTOMERIC	SEMI-GLOSS	GALV MTL BOLLARDS	METAL	----	----	----	----
P-11	MINWAX	STAIN	----	TBD	MATCH PL-1	----	STAIN	SATIN	INT. WD. TRIM	WOOD	----	----	----	1
P-13	SHERWIN WILLIAMS	PAINT	----	SW 7101	FUTON	----	LATEX ENAMEL	SEMI-GLOSS	H.M. DR FRAMES	METAL	----	----	----	----
P-14	SHERWIN WILLIAMS	PAINT	----	SW 6105	DIVINE WHITE	----	EPOXY	SATIN	WOMEN'S ROOM	GYPBD.	----	----	----	----
P-15	SHERWIN WILLIAMS	PAINT	----	SW 7005	PURE WHITE	----	ACRYLIC LATEX	SEMI-GLOSS	COLUMNS	CEMENTITIOUS	----	----	----	----

NOTES:
1. PROVIDE SATIN FINISH POLYURETHANE FINISH COAT (S)
2. ALUMINUM DRIP EDGE AND ROOF TILE CLOSURE TO BE PAINTED TO MATCH ROOF TILE

VINYL WALL COVERING CODE SCHEDULE

CODE	PRODUCT DATA MANUFACTURER	PROD./MODEL	DES./PATTERN	MFR. NO.	PRODUCT CHARACTERISTICS COLOR	SIZE/WT	TYPE	FINISH	INSTALLATION INFORMATION MANUFACTURER	TYPE	COLOR	SIZE	METHOD	NOTES
VWC-1	VICRTEX	----	MILANO	ML21-06	MONDOVI WHITE	54"/21 OZ.	II	----	----	----	----	----	ADHESIVE	----
VWC-2	KOROSEAL	----	EMPRES STRIPE	E221-22	BONE	54"/21 OZ.	II	----	----	----	----	----	ADHESIVE	----
VWC-3	VICRTEX	----	CARLISLE	CL21-17	HARVEST	54"/21 OZ.	II	----	----	----	----	----	ADHESIVE	----

BASE CODE SCHEDULE

CODE	PRODUCT DATA MANUFACTURER	PROD./MODEL	DES./PTRN	MFR NO	PRODUCT CHARACTERISTICS COLOR	SIZE/WEIGHT	TYPE	FINISH	INSTALLATION METHODS MFR.	TYPE	COLOR	SIZE	METHOD	NOTES
B-1	JOHNSONITE	MILLWORK	INFLECTION	MW-XX-G	68 WHITE SAND	5 1/4"	STRAIGHT	MATTE	---	---	---	---	ADHESIVE	8 FT. LENGTHS
B-2	TRAVERTINI GROUP	TILE BASE	II CLASSICO PERFEZIONATO	----	MAGNOLIA	30 X 30 3/8" THICK	PORCELAIN BULL NOSE	----	MAPEI	----	39 IVORY	1/4"	THIN SET	----
B-3	JOHNSONITE	VINYL BASE	----	----	11 CANVAS	4", 1/8" GAUGE	COVE	MATTE	---	---	---	---	ADHESIVE	CONTINUOUS ROLL

CARPET CODE SCHEDULE

CODE	PRODUCT DATA MFR.	PROD./MODEL	DES./PATTERN	MFR. NO.	PRODUCT CHARACTERISTICS COLOR	SIZE/WEIGHT	TYPE	FINISH	INSTALLATION INFORMATION MFR.	TYPE	COLOR	SIZE	METHOD	NOTES
CPT-1	SHAW CONTRACT GROUP	----	INSPIRATION	402TB	HEAVEN H187D	38 OZ.	CUT/LOOP	----	----	----	----	----	GLUE DOWN	FIELD
CPT-2	MOHAWK COMMERCIAL	----	CEDAR BAY	----	LIDO BAY BLUE 07256	33 OZ	CUT/LOOP	----	----	----	----	----	GLUE DOWN	BORDER

VINYL COMPOSITE TILE CODE SCHEDULE

CODE	PRODUCT DATA MFR.	PROD./MODEL	DES./PTRN.	MFR. NO.	PRODUCT CHARACTERISTICS COLOR	SIZE/WEIGHT	TYPE	FINISH	INSTALLATION METHODS MFR.	TYPE	COLOR	SIZE	METHOD	NOTES
VCT-1	MANNINGTON COMMERCIAL	----	ESSENTIALS	----	107 BISQUE	12" x 12" x 1/8	---	---	---	---	---	---	ADHESIVE	----

FLOOR TILE CODE SCHEDULE

CODE	PRODUCT DATA MANUFACTURER	PROD./MODEL	DES./PATTERN	MFR. NO.	PRODUCT CHARACTERISTICS COLOR	SIZE/WT	TYPE	FINISH	INSTALLATION METHODS GROUT MFGR.	TYPE	COLOR	SIZE	METHOD	NOTES
FT-1	TRAVERTINI	(FIELD TILE)	II CLASSICO PERFEZIONATO	----	MAGNOLIA	30 x 30 3/8" THICK	PORCELAIN	----	MAPEI	----	39 IVORY	1/4"	THIN SET	2,3,4

NOTES:
1. CUT TO SIZE FROM 12' X 12' TILES. SEE ACCENT TILE DIAGRAM
2. PROVIDE LATEX ADDITIVE GROUT
3. INSTALL FLOOR TILE ACCORDING WITH THE TILE PATTERN LAYOUT DRAWING
4. RANDOMLY PLACE TILES FOR A NON-DIRECTLY FACE PATTERN

DESIGN SERVICES INCORPORATED
1778 N. PARK AVE., SUITE 100, MAITLAND, FL 32751,
TELEPHONE(407) 629-5755
LICENSE NO. F00061
ARCHITECTURE
INTERIOR DESIGN
SPACE PLANNING

GENERAL NOTES

WEST OFFICE
(NEW BRANCH BANK)
LAKE CITY, FLORIDA

PEOPLES STATE BANK

1 2 3 4

INTERIOR ELEVATION KEY

NORTH
ACTUAL
PLAN

MARK	DATE	REVISIONS

COMM. NO:	06003.00	DRAWN:	KLP
DATE:	02/15/06	CHECKED:	ELM
SCALE:	NC SCALE		
FILE:	06003.00-SCHEDULES		

MATERIAL FINISH SCHEDULE

CODE SCHEDULES

SEAL

ARCHITECT/CONSULTANT
EDDIE L. MUSE
JUN 07 2006
LICENSE NO. AR-12112

SHEET NUMBER
A-4.00

06003.00-SCHEDULES Wed, May 24, 2006 12:38:26 PM

EXTERIOR STOREFRONT ELEVATIONS

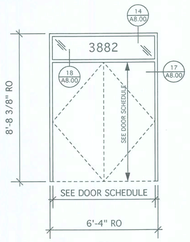

(A)
ALL GLASS GL-1
(T) TEMPERED GLASS

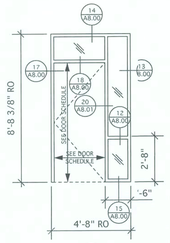

(E)
ALL GLASS GL-1
(T) TEMPERED GLASS

WINDOW ELEVATIONS

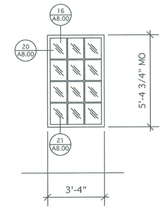

(1)(2)(3)(4)(5)
(6)(7)(8)(9)
ALL GLASS TO BE TEMPERED GL-2

INTERIOR WOOD STOREFRONT ELEVATIONS

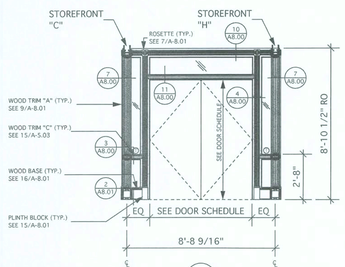

(B)
ALL GLASS GL-3
(T) TEMPERED GLASS

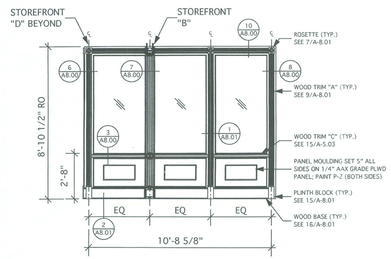

(C)
ALL GLASS GL-3
(T) TEMPERED GLASS

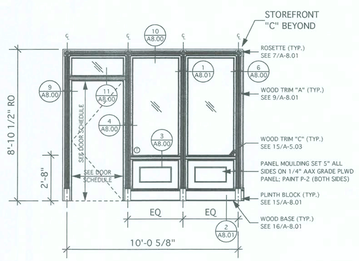

(D)
ALL GLASS GL-3
(T) TEMPERED GLASS

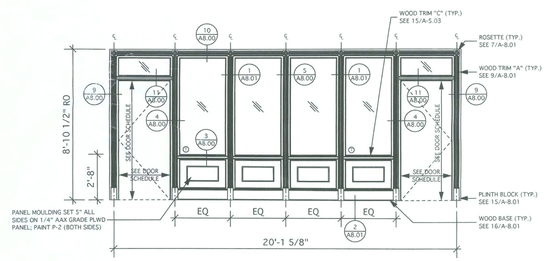

(F)
ALL GLASS GL-3
(T) TEMPERED GLASS

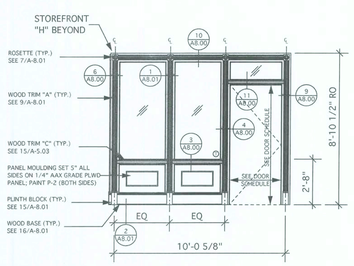

(G)
ALL GLASS GL-3
(T) TEMPERED GLASS

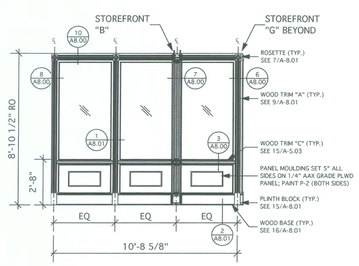

(H)
ALL GLASS GL-3
(T) TEMPERED GLASS

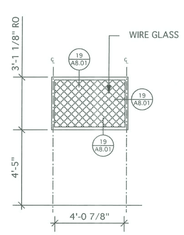

ALL GLASS GL-4
(I)
FIRE RATE WOOD FRAME

DOOR SCHEDULE

		DOOR								FRAME					DETAILS					
MARK	SPACE	WIDTH	HEIGHT	THK.	TYPE	BASE MAT.	FINISH MAT.	FINISH CODE	GLASS TYPE	FRAME TYPE	BASE MAT.	FINISH MAT.	FINSH CODE	GLASS TYPE	HEAD	JAMB	SILL	FIRE RATING HOURS	FIRE RATING LTR	NOTES
100A	VESTIBULE	PR 3'0"	7'0"	----	A	ALUM	F.F.	----	GL-1	A	ALUM	F.F.	----	----	18/A-8.00	17/A-8.00	----	----	----	1,2
101A	ENTRY	PR 3'0"	7'0"	1 3/4"	F	WD	PAINT	P-2	GL-3	B	WOOD	PAINT	P-2	GL-3	11/A-8.00	4/A-8.00	----	----	----	1
102A	OFFICE	3'0"	7'0"	1 3/4"	B	WD	PAINT	P-2	----	D	WOOD	PAINT	P-2	GL-3	11/A-8.00	4,9/A-8.00	----	----	----	1
103A	CONF./OFFICE	3'0"	7'0"	1 3/4"	B	WD	PAINT	P-2	----	BB	WOOD	PAINT	P-2	----	21/A-8.01	21/A-8.01	----	----	----	5
104A	MEN	3'0"	7'0"	1 3/4"	B	WD	PAINT	P-2	----	BB	WOOD	PAINT	P-2	----	21/A-8.01	21/A-8.01	----	----	----	3,4
105A	WOMEN	3'0"	7'0"	1 3/4"	B	WD	PAINT	P-2	----	BB	WOOD	PAINT	P-2	----	21/A-8.01	21/A-8.01	----	----	----	3,4
106A	HALL	3'0"	7'0"	----	A	ALUM	F.F.	----	GL-1	E	ALUM	F.F.	----	GL-1	18/A-8.00	17/A-8.00	----	----	----	1,2
107A	EMPLOYEE LOUNGE	3'0"	7'0"	1 3/4"	B	WD	PAINT	P-2	----	BB	WOOD	PAINT	P-2	----	21/A-8.01	21/A-8.01	----	----	----	4
108A	JANITOR'S CLOSET	3'0"	7'0"	1 3/4"	D	WD	PAINT	P-2	----	AA	HM	PAINT	P-13	----	2/A-8.00	2/A-8.00	----	3/4 HR	----	3
109A	SAFE KEEPING	3'0"	7'0"	1 3/4"	C	WD	PAINT	P-2	----	CC	WOOD	PAINT	P-2	----	23/A-8.01	22/A-8.01	----	3/4 HR	----	5
114A	NIGHTDROP	3'0"	7'0"	1 3/4"	B	WD	PAINT	P-2	----	BB	WOOD	PAINT	P-2	----	21/A-8.01	21/A-8.01	----	----	----	6
115A	ELECTRICAL CLOSET	PR 3'0"	7'0"	1 3/4"	E	WD	PAINT	P-2	----	AA	HM	PAINT	P-13	----	1/A-8.00	1/A-8.00	----	----	----	----
116A	DATA CLOSET	PR 3'0"	7'0"	1 3/4"	E	WD	PAINT	P-2	----	AA	HM	PAINT	P-13	----	1/A-8.00	1/A-8.00	----	----	----	----
117A	WORK ROOM	3'0"	7'0"	1 3/4"	B	WD	PAINT	P-2	----	BB	WOOD	PAINT	P-2	----	21/A-8.01	21/A-8.01	----	----	----	5
117B	WORK ROOM	3'0"	7'0"	1 3/4"	B	WD	PAINT	P-2	----	BB	WOOD	PAINT	P-2	----	21/A-8.01	21/A-8.01	----	----	----	6
119A	OFFICE	3'0"	7'0"	1 3/4"	B	WD	PAINT	P-2	----	F	WOOD	PAINT	P-2	GL-3	11/A-8.00	4,9/A-8.00	----	----	----	1
120A	OFFICE	3'0"	7'0"	1 3/4"	B	WD	PAINT	P-2	----	F	WOOD	PAINT	P-2	GL-3	11/A-8.00	4,9/A-8.00	----	----	----	1
121A	OFFICE	3'0"	7'0"	1 3/4"	B	WD	PAINT	P-2	----	BB	WOOD	PAINT	P-2	----	21/A-8.01	21/A-8.01	----	----	----	5
122A	OFFICE	3'0"	7'0"	1 3/4"	B	WD	PAINT	P-2	----	G	WOOD	PAINT	P-2	GL-3	11/A-8.00	4,9/A-8.00	----	----	----	1

NOTES:

1. WITH STOREFRONT TRANSOM PANEL ABOVE
2. GL-1 TO BE "PPG" MONOLITHIC GLASS, (TEMPERED WHERE NOTED), 1/4" THICK, CLEAR, POLISHED BOTH SIDES
3. UNDERCUT 3/4" MAX
4. PLINTH, ROSETTE AND FLUTED TRIM TO BE ON HALL SIDE
5. PLINTH, ROSETTE AND FLUTED TRIM TO BE ON WAITING / CSR STATION SIDE
6. PLINTH, ROSETTE AND FLUTED TRIM TO BE ON TELLERLINE / DRIVE-IN TELLER SIDE

HOLLOW METAL FRAME ELEVATIONS

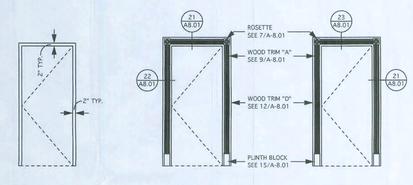

HOLLOW METAL FRAME PAINT P-13 — AA

WOOD FRAME PAINT P-2 — BB

FIRE RATED WOOD FRAME PAINT P-2 — CC

DOOR ELEVATIONS

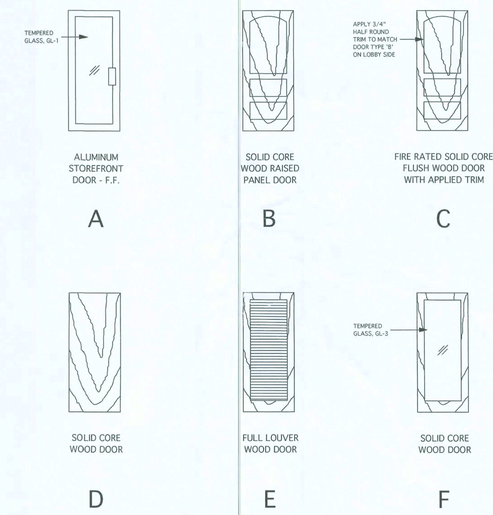

A — ALUMINUM STOREFRONT DOOR - F.F.

B — SOLID CORE WOOD RAISED PANEL DOOR

C — FIRE RATED SOLID CORE FLUSH WOOD DOOR WITH APPLIED TRIM

D — SOLID CORE WOOD DOOR

E — FULL LOUVER WOOD DOOR

F — SOLID CORE WOOD DOOR

DESIGN PRESSURES

WIND VELOCITY (MPH)	110	MEAN ROOF HEIGHT h (FT)	25.00	
EXPOSURE CATEGORY	B	BUILDING WIDTH (FT)	60.50	
IMPORTANCE FACTOR	1	BUILDING LENGTH (FT)	76.67	
INTERNAL PRESSURE COEFFICIENT	0.18	ROOF SLOPE ø (X:12)	6	

OPENING MARK	OPENING DESCRIPTION	LOCATION ZONE	OPENING ELEVATION (FT)	OPENING DIMENSIONS WIDTH (INCHES)	OPENING DIMENSIONS HEIGHT (INCHES)	MAXIMUM POSITIVE PRESSURE (PSF)	MAXIMUM NEGATIVE PRESSURE (PSF)
A	STOREFRONT	4	4.33	76.00	104.00	19.3	-21.2
100A	STOREFRONT DOORS (PR)	4	3.50	36.00	84.00	20.7	-22.5
1,2,4,5,6,8,9	WINDOWS	4	5.33	40.00	64.80	20.9	-22.8
3,7	WINDOWS	5	5.33	40.00	64.80	20.9	-27.5

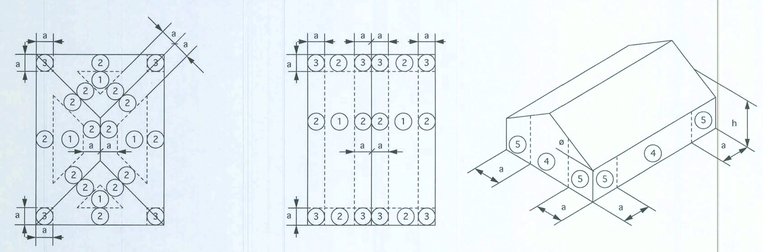

ALL EXTERIOR WINDOW, STOREFRONT, DOORS, ETC. TO BE TESTED IWTH ANSI/AMMA/NWWDA 101/IS2 AND SHALL BEAR AN AMMA OR WDMA LABEL IDENTIFYING THE MANUFACTURER, PERFORMANCE CHARACTERISTICS AND APPROVED TESTING ENTITY

WIDTH OF END ZONE (a) IN FEET = 6.05'

DESIGN SERVICES INCORPORATED
1778 N. PARK AVE., SUITE 100, MAITLAND, FL 32751,
TELEPHONE(407) 629-5755
LICENSE NO. F00061
ARCHITECTURE INTERIOR DESIGN SPACE PLANNING

WEST OFFICE
(NEW BRANCH BANK)
LAKE CITY, FLORIDA

PEOPLES STATE BANK

GENERAL NOTES

ALUMINUM STOREFRON'S AND WINDOWS - WHITE FINISH

INTERIOR ELEVATION KEY

NORTH — ACTUAL / PLAN

MARK	DATE	REVISIONS

COMM. NO:	06003.00	DRAWN:	KLP
DATE:	02/15/06	CHECKED:	ELM
SCALE:	NO SCALE		
FILE:	06003.00-SCHEDULES		

DOOR SCHEDULE

DOOR, FRAME, STOREFRONT & WINDOW ELEVATIONS

SEAL

ARCHITECT/CONSULTANT
EDDIE L. MUSE
JUN 0 7 2006
LICENSE NO. AR-12112

SHEET NUMBER
A-5.00

06003.00-SCHEDULES Wed, May 24, 2006 12:38:26 PM

NOTE:

COPULA AND ALL VINYL SOFFIT, PVC TRIMS AND SHEET MATERIALS ARE FACTORY FINISHED - NO PAINTING REQUIRED

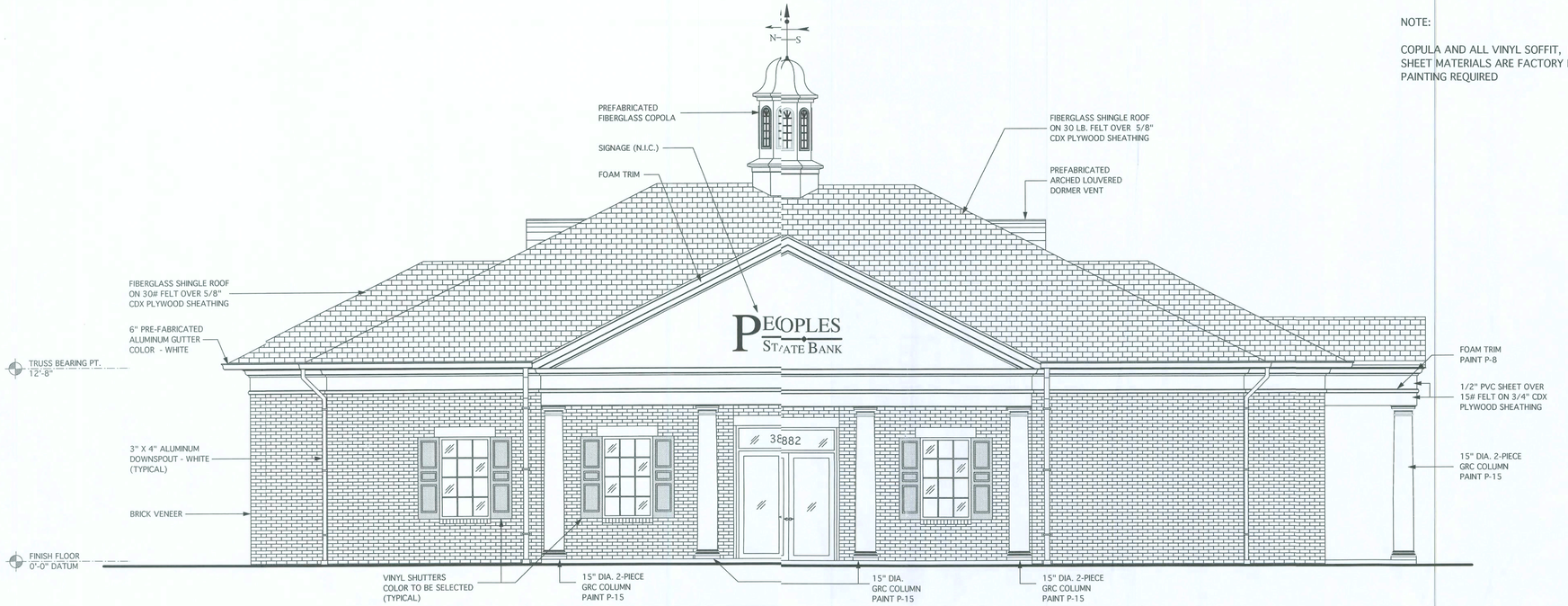

NORTH ELEVATION

SCALE: 1/4" = 1'- 0"

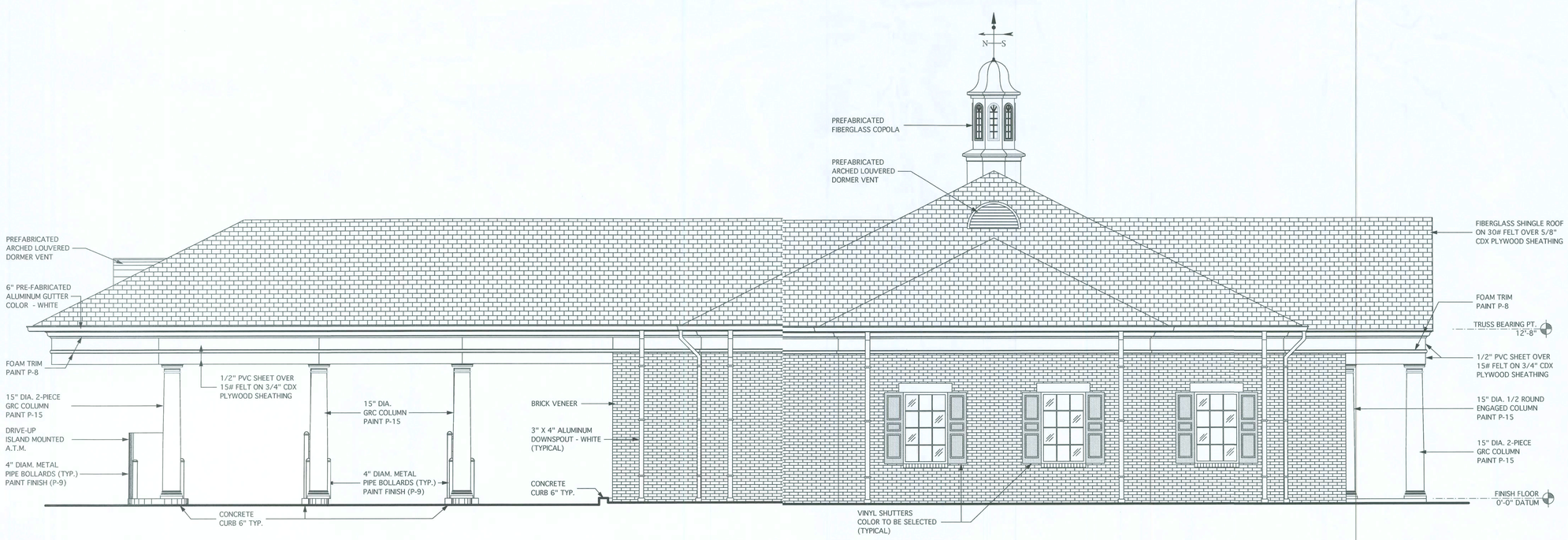

EAST ELEVATION

SCALE: 1/4" = 1'- 0"

DESIGN SERVICES INCORPORATED
1778 N. PARK AVENUE, SUITE 100, MAITLAND, FL 32751,
TELEPHONE(407) 629-5755
LICENSE NO. F00061
ARCHITECTURE
INTERIOR DESIGN
SPACE PLANNING

PEOPLES STATE BANK

WEST OFFICE
(NEW BRANCH BANK)
LAKE CITY, FLORIDA

GENERAL NOTES

1 2 3 4

INTERIOR ELEVATION KEY

NORTH
ACTUAL
PLAN

MARK	DATE	REVISIONS

COMM. NO:	06003.00	DRAWN:	KLP
DATE:	02/15/06	CHECKED:	ELM
SCALE:	1/4" = 1'-0"		
FILE:	06003.00-ELEVATIONS 5-1-06.mcd		

BUILDING ELEVATIONS

SEAL

EDDIE L. MUSE
JUN 07 2006
LICENSE NO. AR-12112

ARCHITECT/CONSULTANT

SHEET NUMBER

A-6.00

06003.00-ELEVATIONS 5-1-06.mcd Wed, May 24, 2006 11:53:18 AM

NOTE:

COPULA AND ALL VINYL SOFFIT, PVC TRIMS AND SHEET MATERIALS ARE FACTORY FINISHED - NO PAINTING REQUIRED

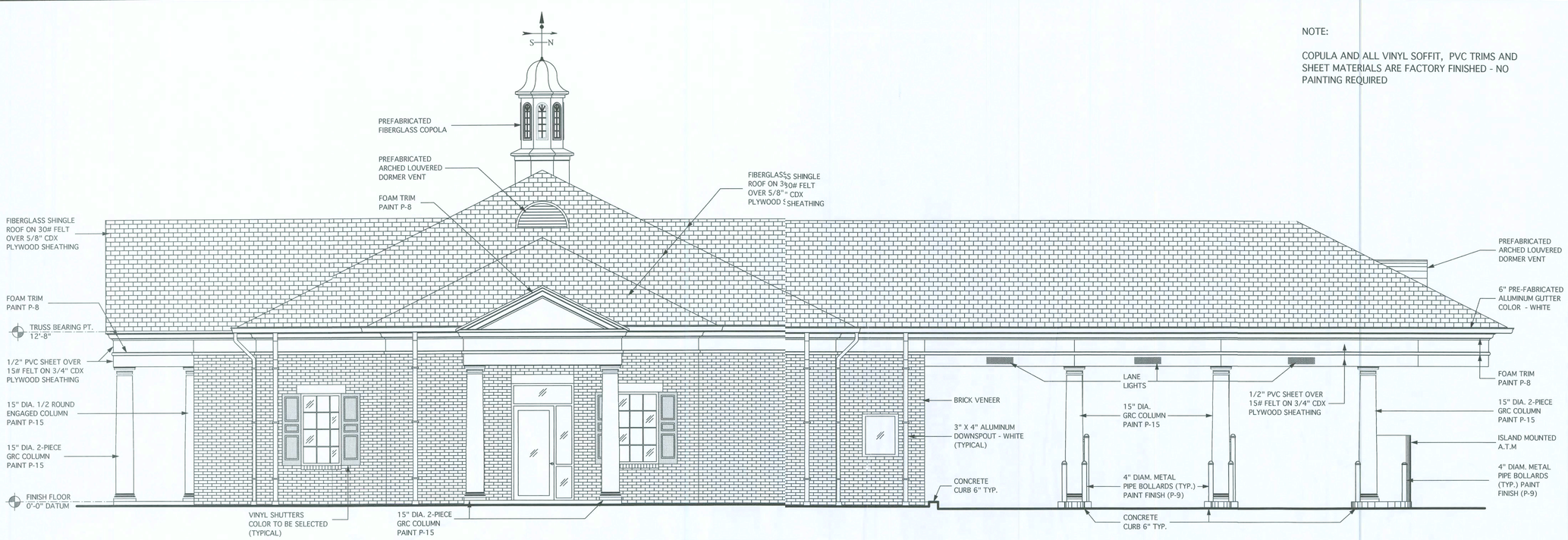

WEST ELEVATION

SCALE: 1/4" = 1'- 0"

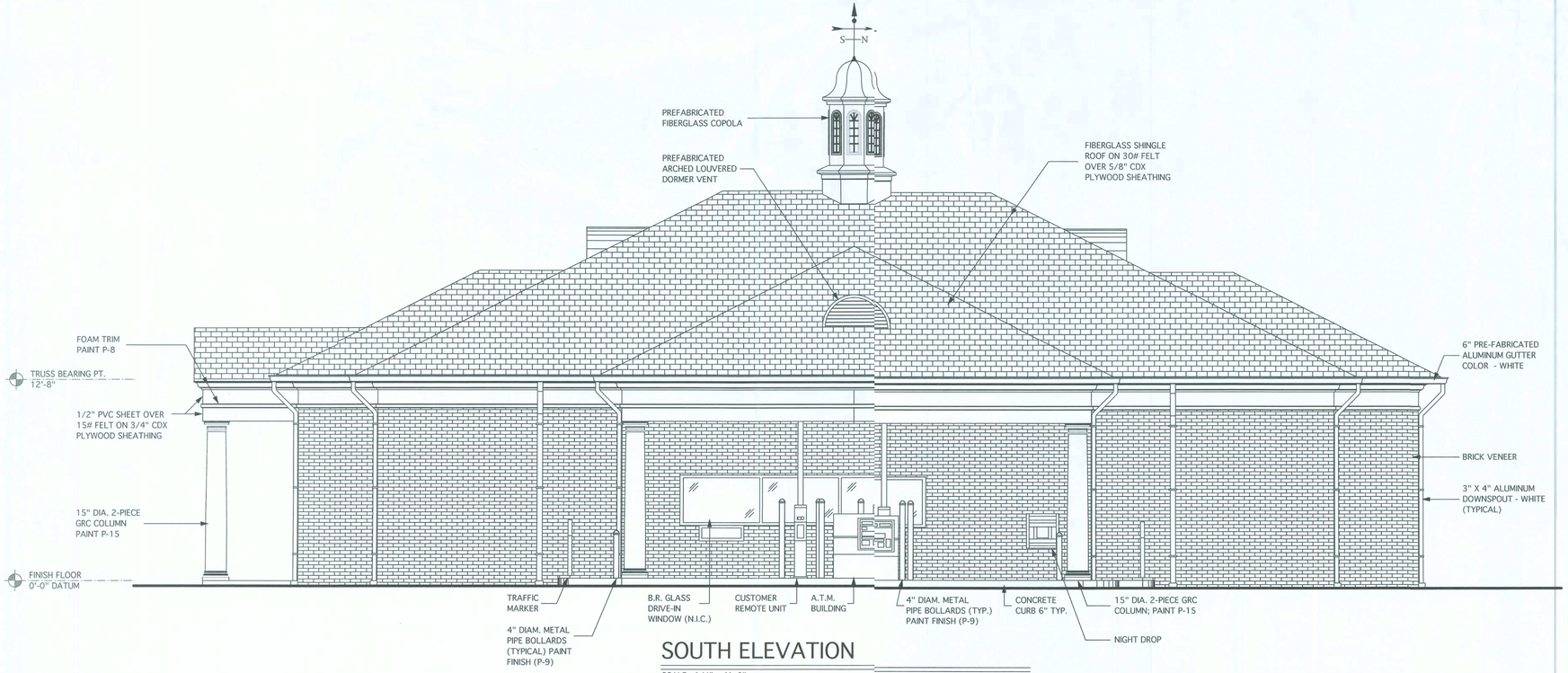

SOUTH ELEVATION

SCALE: 1/4" = 1'- 0"

DESIGN SERVICES INCORPORATED
1778 N. PARK AVENUE, SUITE 100, MAITLAND, FL 32751,
TELEPHONE(407) 629-5755
LICENSE NO. F00061
ARCHITECTURE
INTERIOR DESIGN
SPACE PLANNING

WEST OFFICE
(NEW BRANCH BANK)
LAKE CITY, FLORIDA

PEOPLES STATE BANK

GENERAL NOTES

1 2 3 4

INTERIOR ELEVATION KEY

NORTH
ACTUAL
PLAN

MARK	DATE	REVISIONS

COMM. NO:	06003.00	DRAWN:	KLP
DATE:	02/15/06	CHECKED:	ELM
SCALE:	1/4" = 1'-0"		
FILE:	06003.00-ELEVATIONS 5-1-06.mcd		

BUILDING ELEVATIONS

SEAL

ARCHITECT/CONSULTANT
EDDIE L. MUSE
JUN 07 2006
LICENSE NO. AR-12112

SHEET NUMBER
A-6.01

06003.00-ELEVATIONS 5-1-06.mcd Wed, May 24, 2006 11:53:18 AM

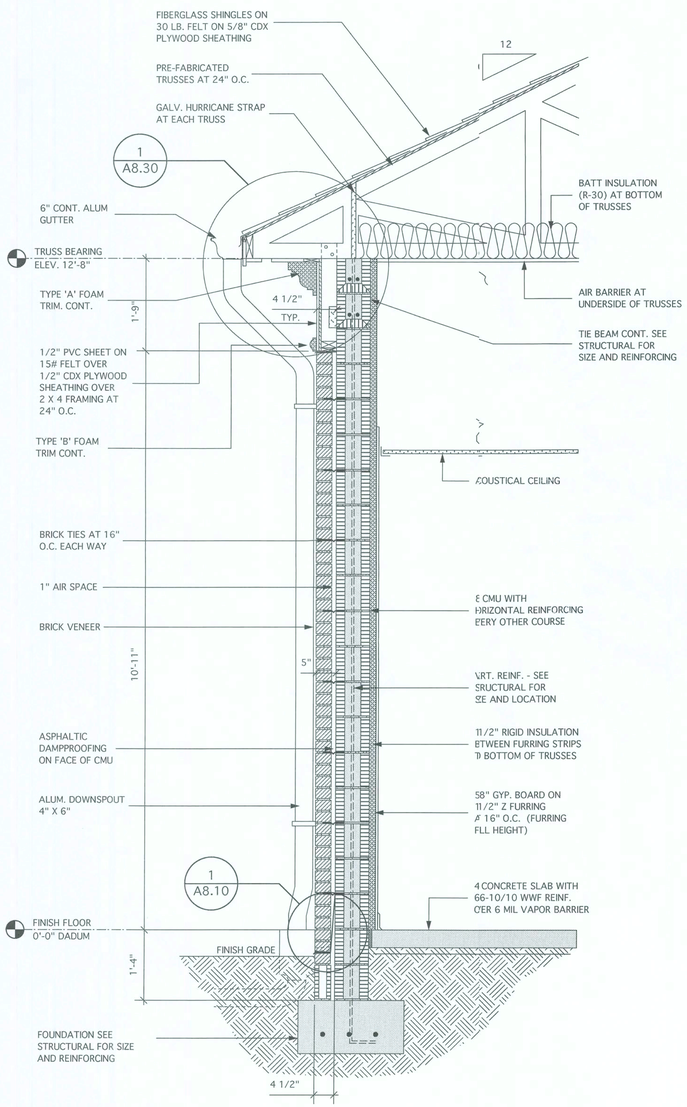

1 WALL SECTIONS
3/4" = 1'-0"

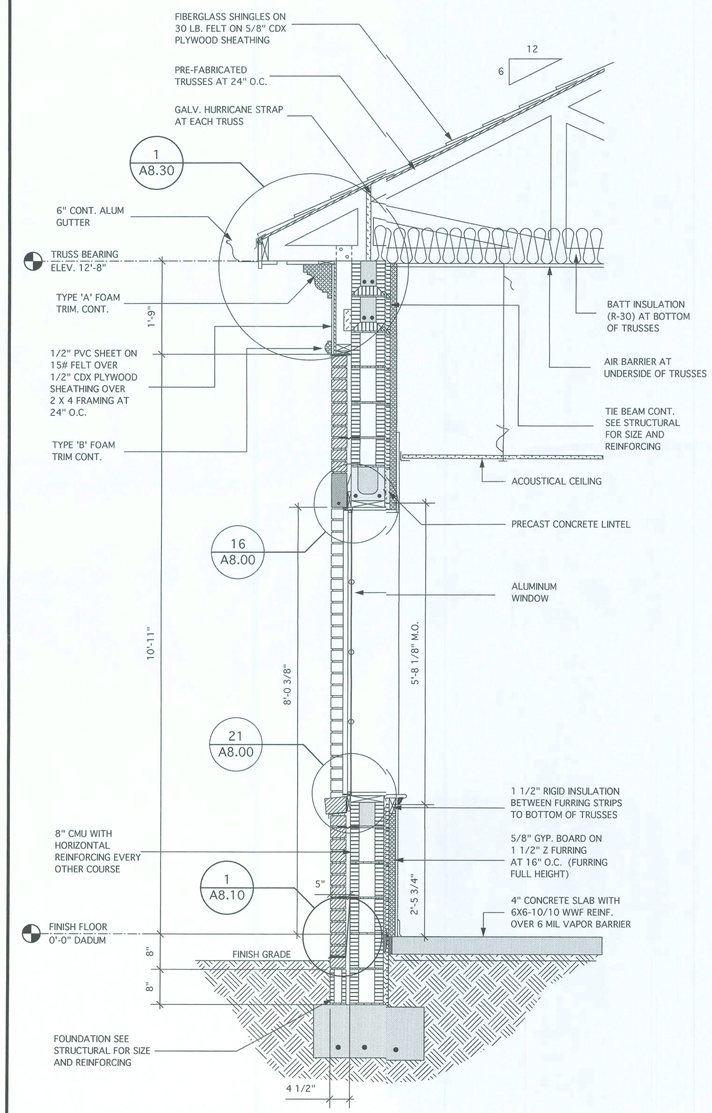

2 WALL SECTIONS
3/4" = 1'-0"

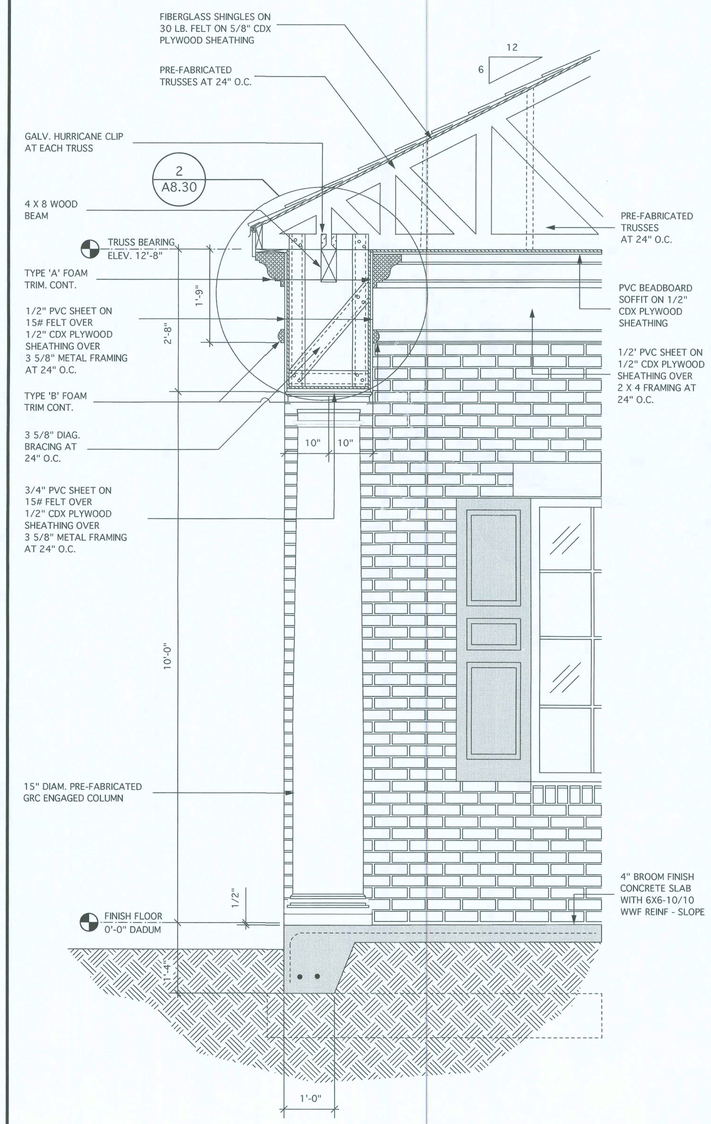

3 WALL SECTIONS
3/4" = 1'-0"

DESIGN SERVICES INCORPORATED
1778 N. PARK AVENUE, SUITE 100, MAITLAND, FL 32751,
TELEPHONE(407) 629-5755
LICENSE NO. F00061
ARCHITECTURE
INTERIOR DESIGN
SPACE PLANNING

WEST OFFICE
(NEW BRANCH BANK)
LAKE CITY, FLORIDA

PEOPLES STATE BANK

GENERAL NOTES

FASTENERS NOTES:

METAL STUD TO METAL STUD - MIN. 2 - NO. 10 PAN HEAD SELF TAPPING SCREWS AT EACH JOINT

METAL STUD TO CONCRETE - HILTI - DN 22P8 POWER ACTUATED FASTENERS AT 12" O.C. AT CONTINUOUS TRACKS OR MIN. 2 AT EACH JOINT - PROVIDE 1 1/4" PENETRATION

METAL STUD TO WOOD - NO. 10 FLAT HEAD COUNTERSUNK SELF TAPPING SCREWS AT 12 O.C. AT CONTINUOUS TRACKS OR MIN. 2 AT EACH JOINT - PROVIDE 1 1/4" PENETRATION

PLYWOOD TO METAL STUD - NO. 10 FLAT HEAD COUNTERSUNK SELF TAPPING SCREWS AT 6" O.C. AT EDGES 12" O.C. INTERMEDIATE

2 X WOOD TO 2 X WOOD - STUD TO PLATE - TOENAIL - 4- 8d COMMON STUD TO PLATE - FACE - 2 - 16d - COMMON STUD TO STUD - FACE - 2 - 16d COMMON

2 X WOOD TO CONCRETE - 1/4" TAPCONS AT 12 O.C. AT CONTINUOUS TRACKS OR MIN. 2 AT EACH JOINT - PROVIDE 1" PENETRATIN

PLYWOOD TO 2 X WOOD - 8d COMMON 6" O.C. AT EDGES, 12" O.C. INTERMEDIATE

1 2 3 4

INTERIOR ELEVATION KEY

NORTH
ACTUAL
PLAN

MARK	DATE	REVISIONS

COMM. NO:	06003.00	DRAWN:	KLP
DATE:	02/15/06	CHECKED:	ELM
SCALE:	3/4" = 1'-0"	© 2006	
FILE:	06003.00-WALL SECT. 00-5/1/06.mcd		

WALL SECTIONS

SEAL

ARCHITECT/CONSULTANT

EDDIE L. MUSE
JUN 07 2006
LICENSE NO. AR-12112

SHEET NUMBER
A-7.00

06003.00-WALL SECT. 00-5/1/06.mcd Wed, May 24, 2006 9:39:41 AM

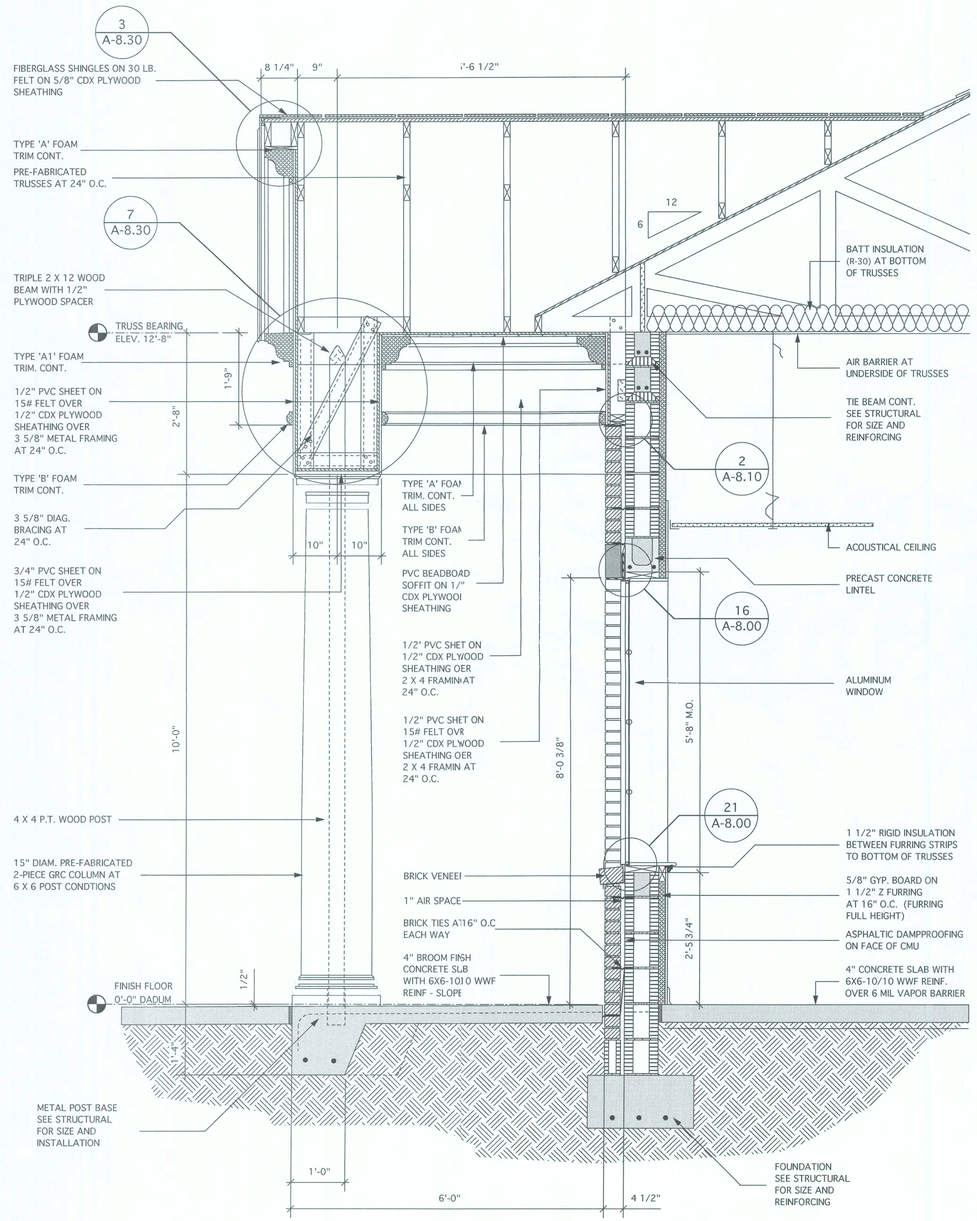

1 WALL SECTIONS
3/4" = 1'-0"

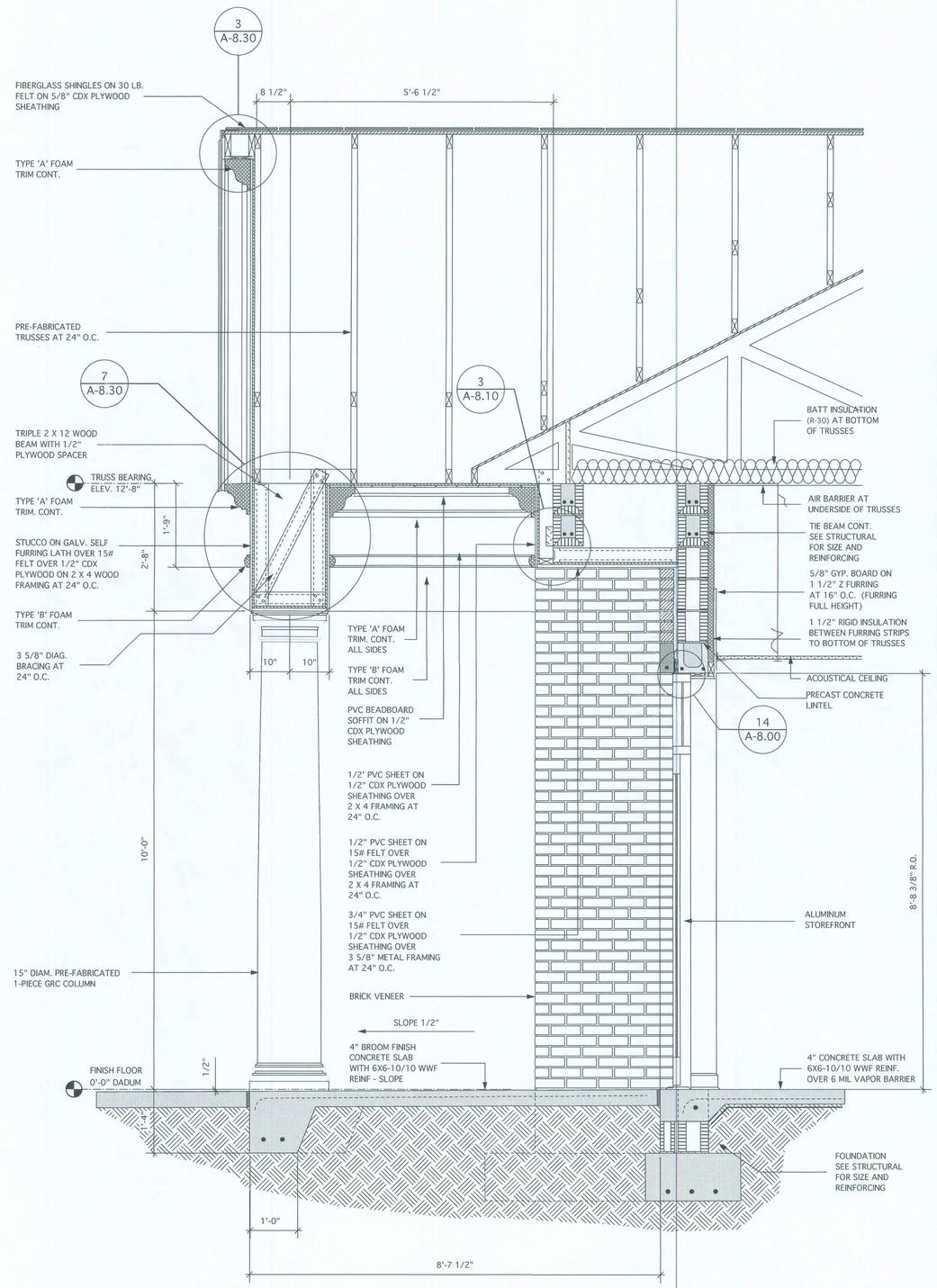

2 WALL SECTIONS
3/4" = 1'-0"

DESIGN SERVICES INCORPORATED
1778 N. PARK AVENUE, SUITE 100, MAITLAND, FL 32751,
TELEPHONE(407) 629-5755
LICENSE NO. F00061
ARCHITECTURE
INTERIOR DESIGN
SPACE PLANNING

WEST OFFICE
(NEW BRANCH BANK)
LAKE CITY, FLORIDA

PEOPLES STATE BANK

GENERAL NOTES

FASTENERS NOTES:

METAL STUD TO METAL STUD - MIN. 2 - NO. 10 AN HEAD SELF TAPPING SCREWS AT EACH JOINT

METAL STUD TO CONCRETE - HILTI - DNI 22P8 PWER ACTUATED FASTENERS AT 12" O.C. AT CONTINUOUS TRACKS OR MIN. 2 AT EAGI JOINT - PROVIDE 1 1/4" PENETRATION

METAL STUD TO WOOD - NO. 10 FLAT HEAD CONTERSUNK SELF TAPPING SCREWS AT 12 O.C. AT CONTINUOUS TRACKS OR MIN. 2 AT IACH JOINT - PROVIDE 1 1/4" PENETRATION

PLYWOOD TO METAL STUD - NO. 10 FLAT HEADCOUNTERSUNK SELF TAPPING SCREWS AT 6" O.C. AT EDGES 12" O.C. INTERMEDIATE

2 X WOOD TO 2 X WOOD - STUD TO PLATE - TO NAIL - 4- 8d COMMON STUD TO PLATE - FACE - 2 - 16d - COMMON STUD TO STUD - FAIE - 2 - 16d COMMON

2 X WOOD TO CONCRETE - 1/4" TAPCONS AT 1/" O.C. AT CONTINUOUS TRACKS OR MIN. 2 AT EACH JOINT - PROVIDE 1" PENETRATIN

PLYWOOD TO 2 X WOOD - 8d COMMON 6" O.C. /" EDGES, 12" O.C. INTERMEDIATE

1 2 3 4

INTERIOR ELEVATION KEY

NORTH
ACTUAL
PLAN

MARK	DATE	REVISIONS

COMM. NO:	06003.00	DRAWN:	KLP
DATE:	02/15/06	CHECKED:	ELM
SCALE:	3/4" = 1'-0"	© 2006	
FILE:	06003.00-WALL SECT. 01 5-1-06.mcd		

WALL SECTIONS

SEAL

ARCHITECT/CONSULTANT

EDDIE L. MUSE
JUN 07 2006
LICENSE NO. AR-12112

SHEET NUMBER
A-7.01

06003.00-WALL SECT. 01 5-1-06.mcd Wed, May 24, 2006 9:43:33 AM

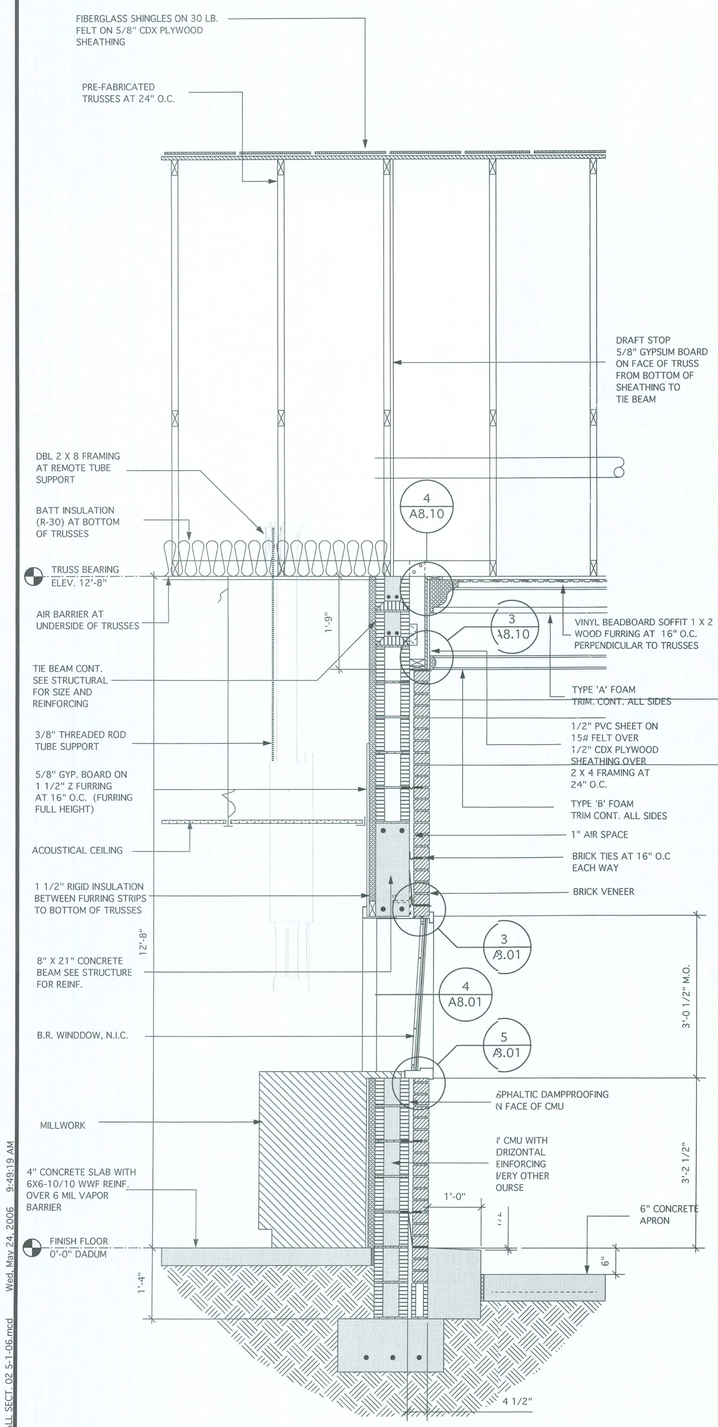

1 WALL SECTIONS
3/4" = 1'-0"

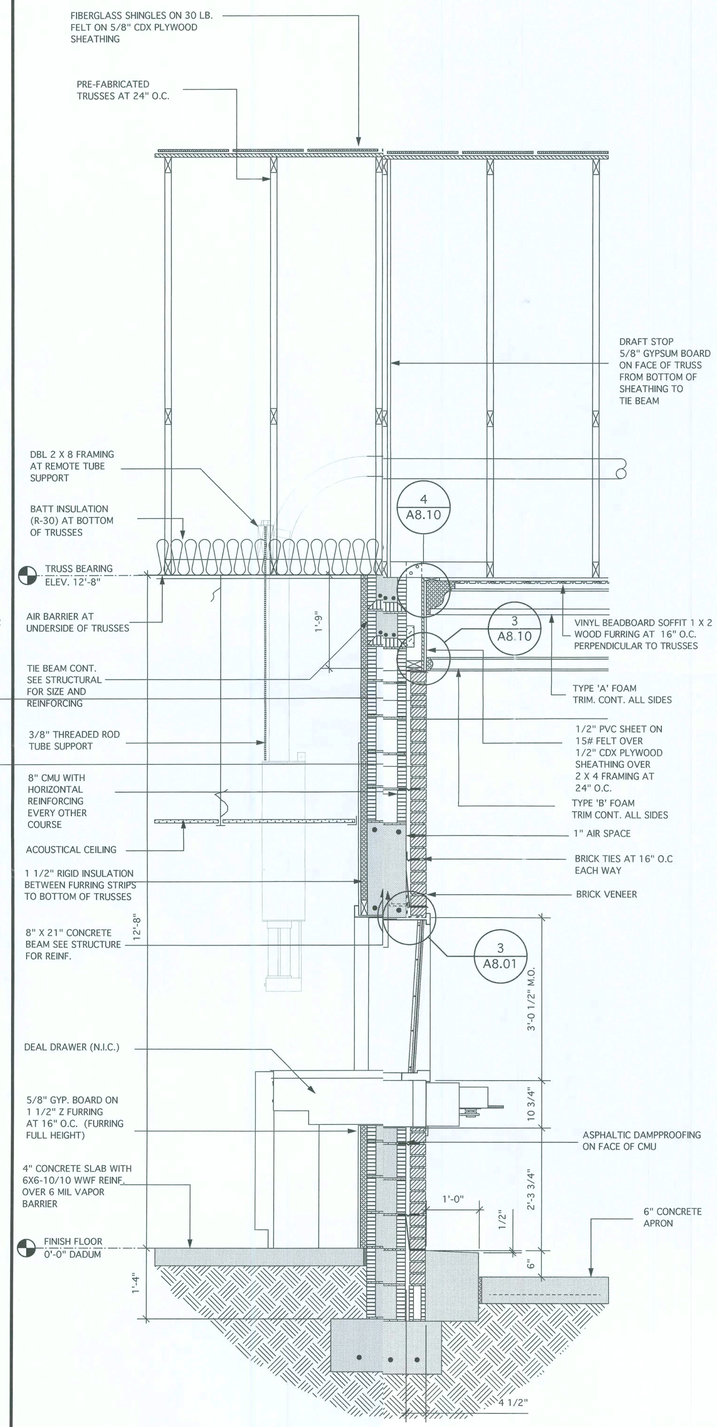

2 WALL SECTIONS
3/4" = 1'-0"

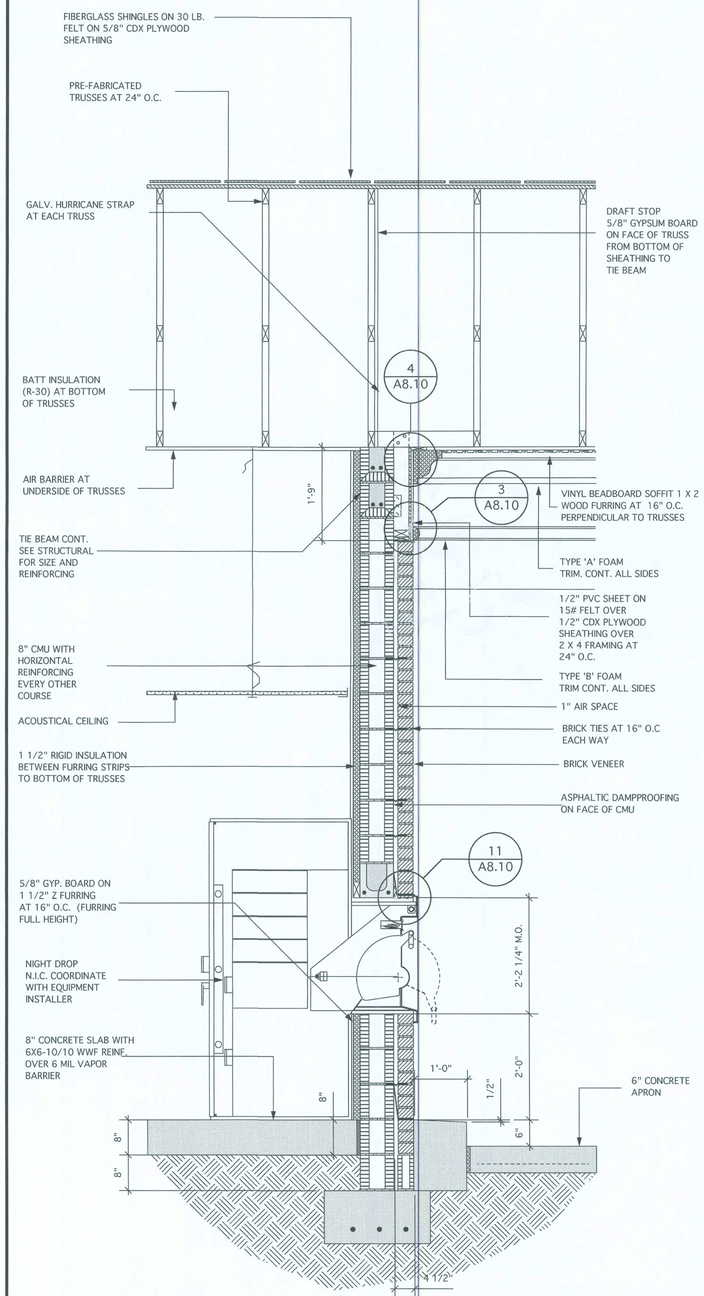

3 WALL SECTIONS
3/4" = 1'-0"

DESIGN SERVICES INCORPORATED
1778 N. PARK AVENUE, SUITE 100, MAITLAND, FL 32751,
TELEPHONE(407) 629-5755
LICENSE NO. F00061
ARCHITECTURE
INTERIOR DESIGN
SPACE PLANNING

WEST OFFICE
(NEW BRANCH BANK)
LAKE CITY, FLORIDA

PEOPLES STATE BANK

GENERAL NOTES

FASTENERS NOTES

METAL STUD TO METAL STUD - MIN. 2 - NO. 0 PAN HEAD SELF TAPPING SCREWS AT EACH JOINT

METAL STUD TO CONCRETE - HILTI - ONI 22F8 POWER ACTUATED FASTENERS AT 12" O.C. AT CONTINUOUS TRACKS OR MIN. 2 AT ACH JOINT - PROVIDE 1 1/4" PENETRATION

METAL STUD TO WOOD - NO. 10 FLAT HEADCOUNTERSUNK SELF TAPPING SCREWS AT
12 O.C. AT CONTINUOUS TRACKS OR MIN. 2 -T EACH JOINT - PROVIDE 1 1/4" PENETRATION

PLYWOOD TO METAL STUD - NO. 10 FLAT HIAD COUNTERSUNK SELF TAPPING SCREWS
AT 6" O.C. AT EDGES 12" O.C. INTERMEDIAT

2 X WOOD TO 2 X WOOD -
STUD TO PLATE - TOE NAIL - 4- 8d COMMON
STUD TO PLATE - FACE - 2 - 16d - COMMON
STUD TO STUD - FACE - 2 - 16d COMMON

2 X WOOD TO CONCRETE - 1/4" TAPCONS A' 12" O.C. AT CONTINUOUS TRACKS OR MIN. 2 AT EACH JOINT - PROVIDE 1" PENETRUTION

PLYWOOD TO 2 X WOOD - 8d COMMON 6" O2. AT EDGES, 12" O.C. INTERMEDIATE

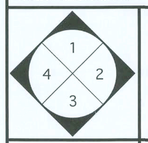

INTERIOR ELEVATION KEY

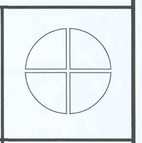

NORTH
ACTUAL
PLAN

MARK	DATE	REVISIONS

COMM. NO:	06003.00	DRAWN:	KLP
DATE:	02/15/06	CHECKED:	ELM
SCALE:	3/4" = 1'-0"	© 2006	
FILE:	06003.00-WALI SECT. 02 5-1-06.mcd		

WALL SECTIONS

SEAL

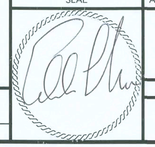

ARCHITECT/CONSULTANT
EDDIE L. MUSE
JUN 0 7 2006
LICENSE NO. AR-12112

SHEET NUMBER
A-7.02

06003.00-WALI SECT. 02 5-1-06.mcd Wed May 24, 2006 9:49:19 AM

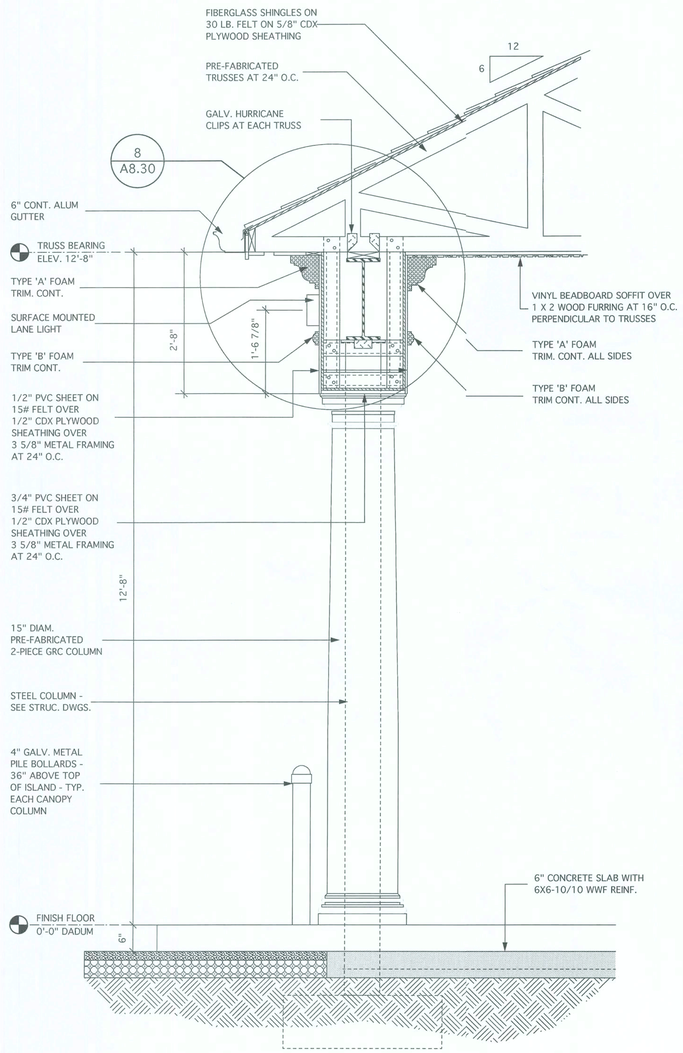

1 WALL SECTIONS
3/4" = 1'-0"

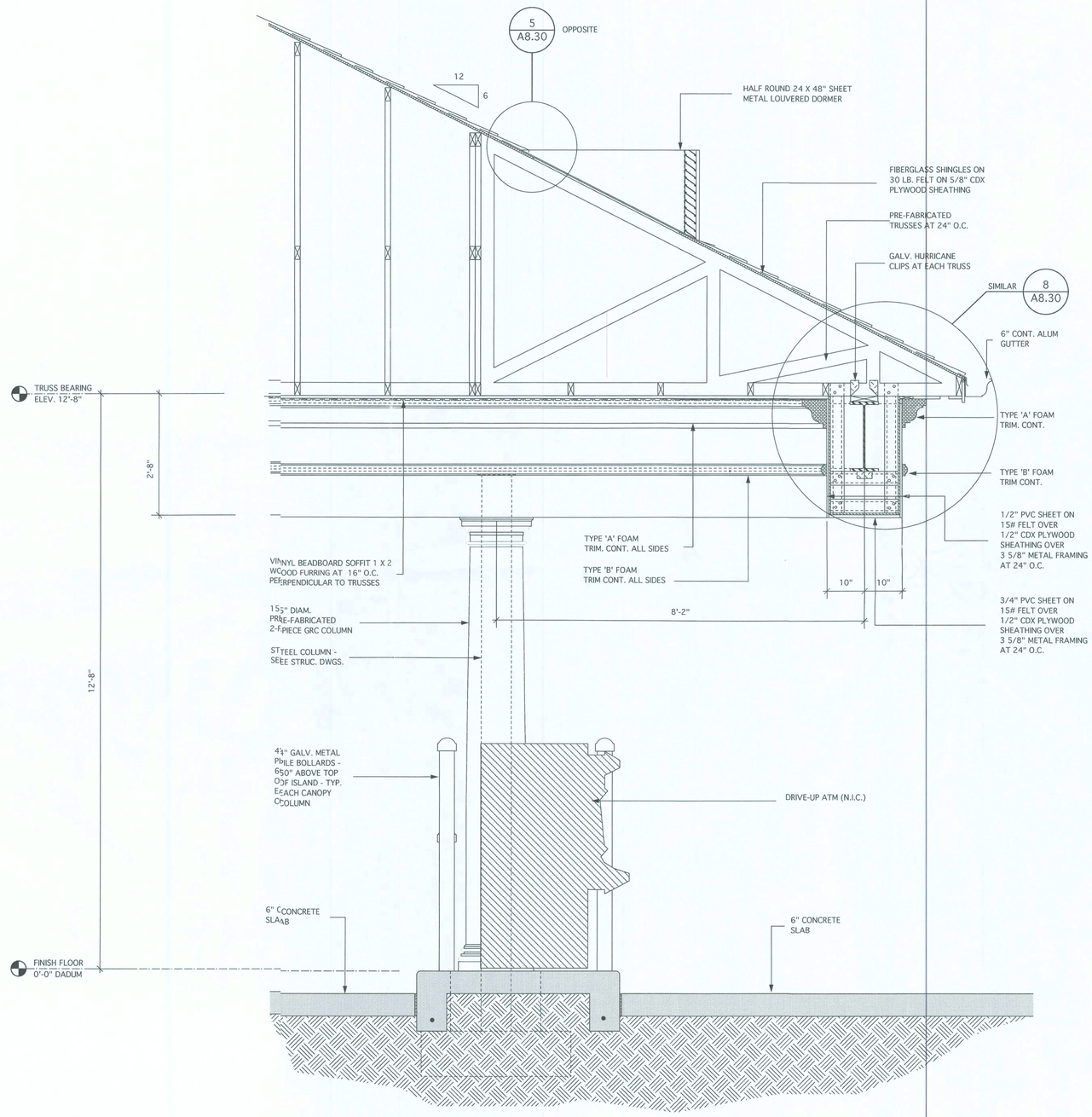

2 WALL SECTIONS
3/4" = 1'-0"

DESIGN SERVICES INCORPORATED
1778 N. PARK AVENUE, SUITE 100, MAITLAND, FL 32751,
TELEPHONE(407) 629-5755
LICENSE NO. F00061
ARCHITECTURE
INTERIOR DESIGN
SPACE PLANNING

WEST OFFICE
(NEW BRANCH BANK)
LAKE CITY, FLORIDA

PEOPLES STATE BANK

GENERAL NOTES

FASTENERS NOTES

METAL STUD TO METAL STUD - MIN. 2 - NO. 10PAN HEAD SELF TAPPING SCREWS AT EACH JOINT

METAL STUD TO CONCRETE - HILTI - DNI 22P8 IOWER ACTUATED FASTENERS AT 12" O.C. AT CONTINUOUS TRACKS OR MIN. 2 AT EAH JOINT - PROVIDE 1 1/4" PENETRATION

METAL STUD TO WOOD - NO. 10 FLAT HEAD COUNTERSUNK SELF TAPPING SCREWS AT
12 O.C. AT CONTINUOUS TRACKS OR MIN. 2 ATEACH JOINT - PROVIDE 1 1/4" PENETRATION

PLYWOOD TO METAL STUD - NO. 10 FLAT HEAI COUNTERSUNK SELF TAPPING SCREWS
AT 6" O.C. AT EDGES 12" O.C. INTERMEDIATE

2 X WOOD TO 2 X WOOD -
STUD TO PLATE - TOE NAIL - 4- 8d COMMON
STUD TO PLATE - FACE - 2 - 16d - COMMON
STUD TO STUD - FACE - 2 - 16d COMMON

2 X WOOD TO CONCRETE - 1/4" TAPCONS AT 12" O.C. AT CONTINUOUS TRACKS OR MIN. 2 AT EACH JOINT - PROVIDE 1" PENETRATION

PLYWOOD TO 2 X WOOD - 8d COMMON 6" O.C. AT EDGES, 12" O.C. INTERMEDIATE

1 2 3 4

INTERIOR ELEVATION KEY

NORTH
ACTUAL
PLAN

MARK	DATE	REVISIONS

COMM. NO:	06003.00	DRAWN:	KLP
DATE:	02/15/06	CHECKED:	ELM
SCALE:	3/4" = 1'-0"	© 2006	
FILE:	06003.00-WALLSECT. 03 5-1-06.mcd		

WALL SECTIONS

SEAL

ARCHITECT/CONSULTANT
EDDIE L. MUSE
JUN 0 7 2006
LICENSE NO. AR-12112

SHEET NUMBER
A-7.03

06003.00-WALL SECT. 03 5-1-06.mcd Wed, May 24, 2006 9:52:52 AM

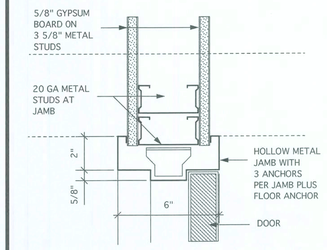

1 DETAIL - HOLLOW METAL JAMB
SCALE: 3" = 1'-0" HEAD SIMILAR

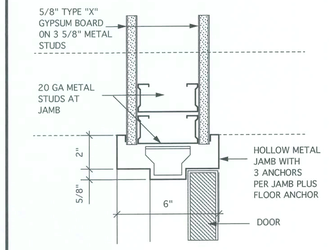

A ONE HOUR RATED PARTITIONS

2 DETAIL - HOLLOW METAL JAMB
SCALE: 3" = 1'-0" HEAD SIMILAR

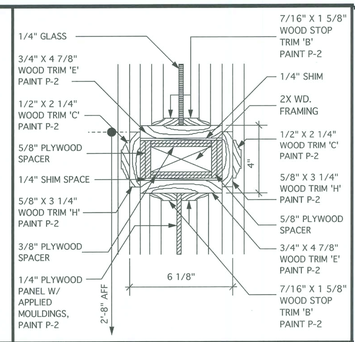

3 DETAIL - STOREFRONT MULLION
SCALE: 3" = 1'-0" AT HORIZONTAL MULLION

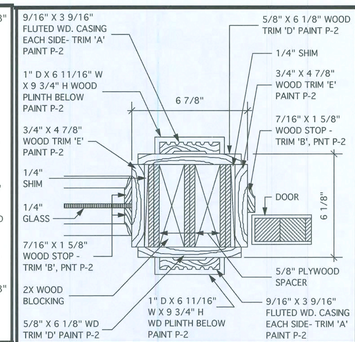

4 DETAIL - STOREFRONT DR. JAMB
SCALE: 3" = 1'-0"

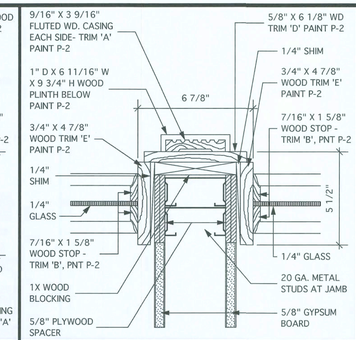

5 DETAIL - STOREFRONT JAMB
SCALE: 3" = 1'-0"

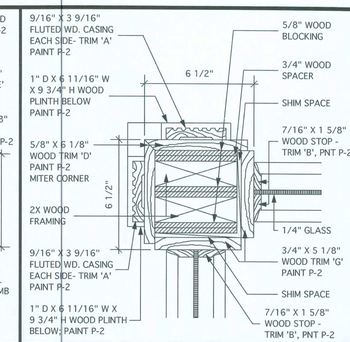

6 DETAIL-STOREFRONT JAMB
SCALE: 3" = 1'-0"

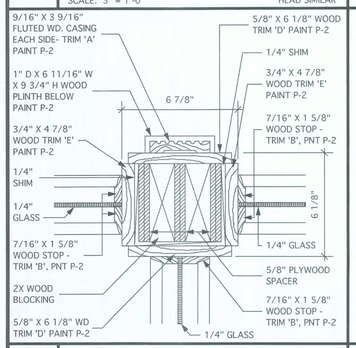

7 DETAIL - STOREFRONT JAMB
SCALE: 3" = 1'-0"

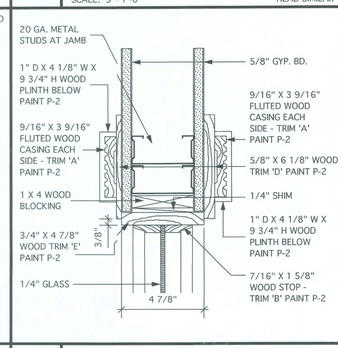

8 DETAL - STOREFRONT JAMB
SCALE: 3" = 1'-0"

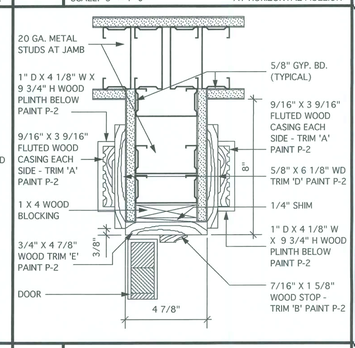

9 DETAIL-STOREFRONT DR. JAMB
SCALE: 3" = 1'-0"

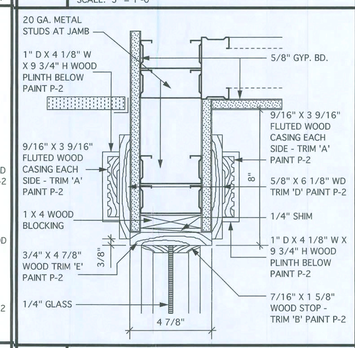

10 DETAIL - STOREFRONT HEAD
SCALE: 3" = 1'-0"

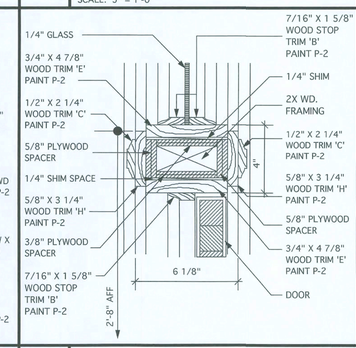

11 DETAIL-STOREFRONT DR. HEAD
SCALE: 3" = 1'-0" AT TRANSOM PANEL

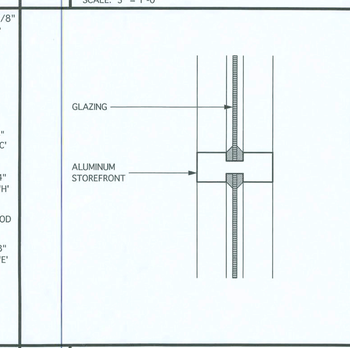

12 DETAIL - STOREFRONT MULLION
SCALE: 3" = 1'-0"

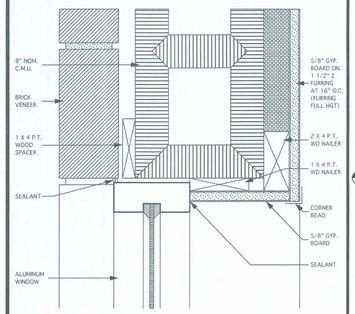

13 DETAIL - STOREFRONT JAMB
SCALE: 3" = 1'-0"

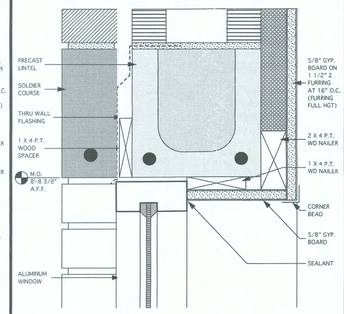

14 DETAI. - STOREFRONT HEAD
SCALE: 3" = 1'-0"

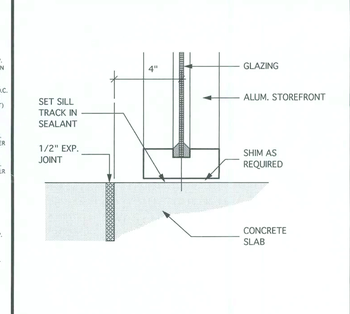

15 DETAIL - STOREFRONT SILL
SCALE: 3" = 1'-0"

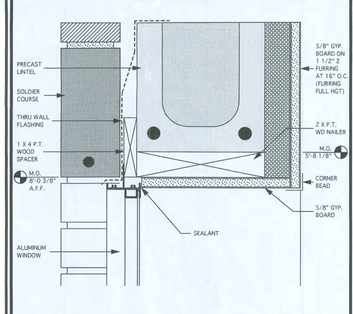

16 DETAIL - WINDOW HEAD
SCALE: 3" = 1'-0"

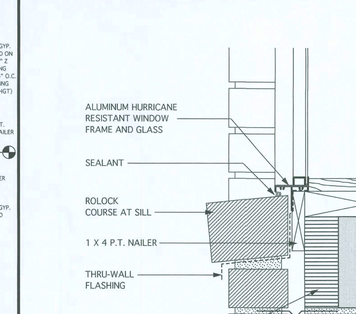

21 DETAIL - WINDOW SILL
SCALE: 3" = 1'-0"

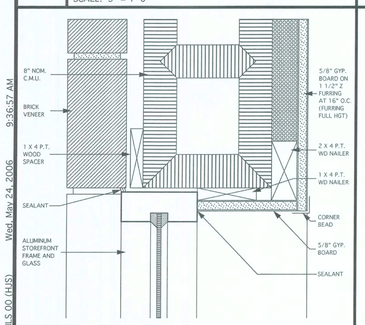

17 DETAIL - STOREFRONT DR. JAMB
SCALE: 3" = 1'-0" AT ENTRY DOOR

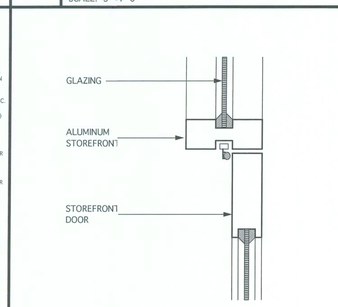

18 DETAIL - STOREFRONT DR. HEAD
SCALE: 3" = 1'-0"

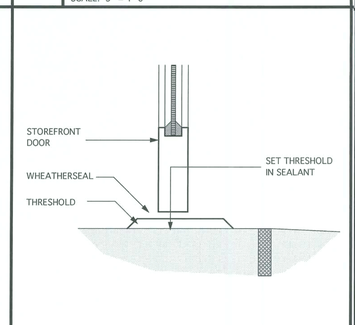

19 DETAIL - DOOR THRESHOLD
SCALE: 3" = 1'-0"

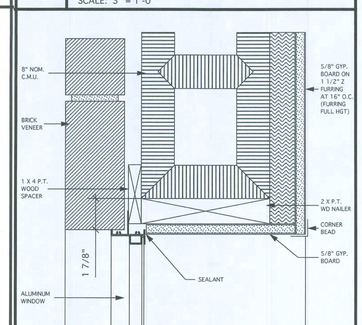

20 DETAIL - WINDOW JAMB
SCALE: 3" = 1'-0"

06003.00-DETAILS 00 (HJS) Wed, May 24, 2006 9:36:57 AM

DESIGN SERVICES INCORPORATED
1778 N. PARK AVENUE, SUITE 100, MAITLAND, FL 32751,
TELEPHONE(407) 629-5755
LICENSE NO. FO0061
ARCHITECTURE INTERIOR DESIGN SPACE PLANNING

WEST OFFICE
(NEW BRANCH BANK)
LAKE CITY, FLORIDA

PEOPLES STATE BANK

GENERAL NOTES

FASTENERS NOTES:

METAL STUD TO METAL STUD - MIN. 2 - No. 10 PAN HEAD SELF TAPPING SCREWS AT EACH JOINT

METAL STUD TO CONCRETE - HILTI - DM 2P/B POWER ACTUATED FASTENERS AT 12" O.C. AT CONTINUOUS TRACKS OR MIN. 2 /f EACH JOINT - PROVIDE 1 1/4" PENETRATION

METAL STUD TO WOOD - NO. 10 FLAT HEAD COUNTERSUNK SELF TAPPING SCREWS AT 12 O.C. AT CONTINUOUS TRACKS OR MIN.2/f AT EACH JOINT - PROVIDE 1 1/4" PENETRATION

PLYWOOD TO METAL STUD - NO. 10 FLATHEAD COUNTERSUNK SELF TAPPING SCREWS AT 6" O.C. AT EDGES 12" O.C. INTERMEDILTE

2 X WOOD TO 2 X WOOD - STUD TO PLAT - TOE NAIL - 4- 8d COMMON STUD TO PLATE - FACE - 2 - 16d - COMMON STUD TO STUD - FACE - 2 - 16d COMMON

2 X WOOD TO CONCRETE - 1/4" TAPCONCAT 12" O.C. AT CONTINUOUS TRACKS OR MIN. 2 AT EACH JOINT - PROVIDE 1" PENIRATION

PLYWOOD TO 2 X WOOD - 8d COMMON 6"O.C. AT EDGES, 12" O.C. INTERMEDIATE

1 2 3 4

INTERIOR ELEVATION KEY

NORTH
ACTUAL
PLAN

MARK	DATE	REVISIONS

COMM. NO:	06003.00	DRAWN:	KLP
DATE:	02/15/06	CHECKED:	ELM
SCALE:	AS NOTED		
FILE:	06003.00-DETAILS 00 (HJS)		

DETAILS

HEAD, JAMB, SILLS

SEAL

ARCHITECT/CONSULTANT
EDDIE L. MUSE
JUN 07 2006
LICENSE NO. AR-12112

SHEET NUMBER
A-8.00

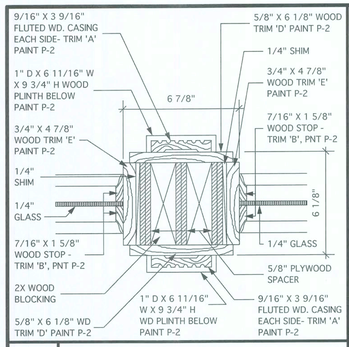

1 DETAIL - STOREFRONT MULLION
SCALE: 3" = 1'-0" AT VERTICAL MULLION

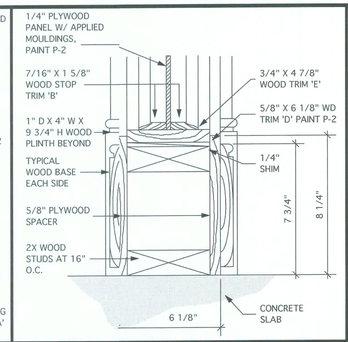

2 DETAL - STOREFRONT SILL
SCALE: 3'= 1'-0"

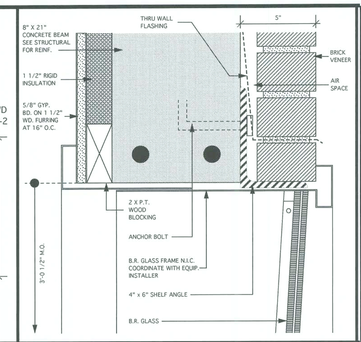

3 DETAIL - B.R. WINDOW HEAD
SCALE: 3" = 1'-0"

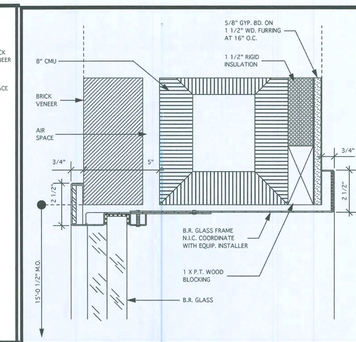

4 DETAIL - B.R. WINDOW JAMB
SCALE: 3" = 1'-0"

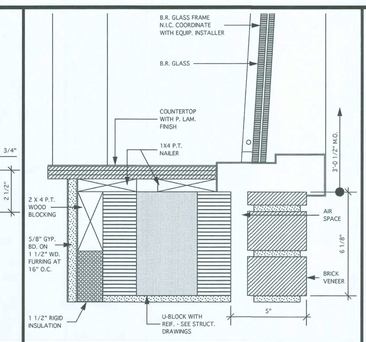

5 DETAIL - B.R. WINDOW SILL
SCALE: 3" = 1'-0"

6

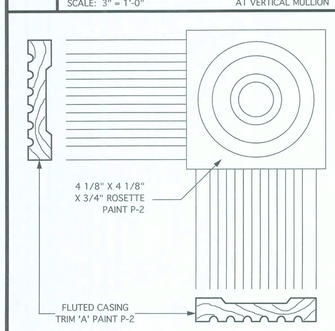

7 DETAIL - DOOR CASING
SCALE: 1/2 FULL

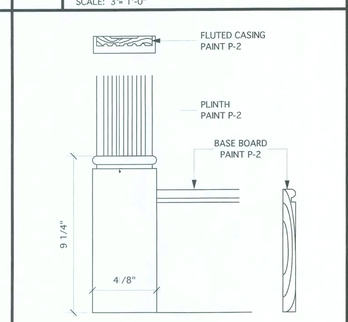

8 DETAL - BASE/CASING DETAIL
SCALE: 3'= 1'-0"

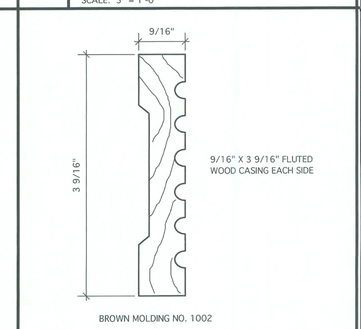

9 DETAIL - WOOD TRIM 'A'
SCALE: FULL SIZE

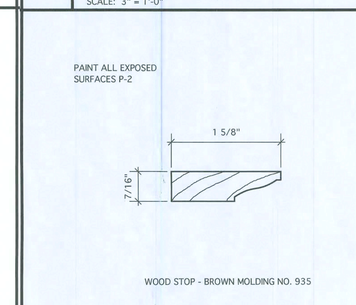

10 DETAIL - WOOD TRIM 'B'
SCALE: FULL SIZE

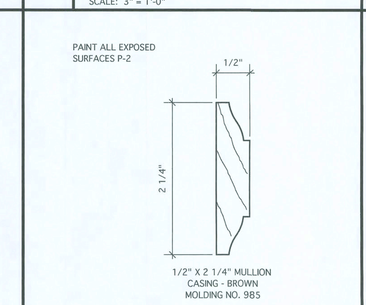

11 DETAIL - WOOD TRIM 'C'
SCALE: FULL SIZE

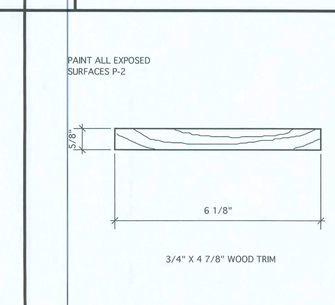

12 DETAIL - WOOD TRIM 'D'
SCALE: 1/2 FULL

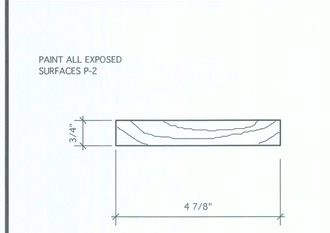

13 DETAIL - WOOD TRIM 'E'
SCALE: 1/2 FULL

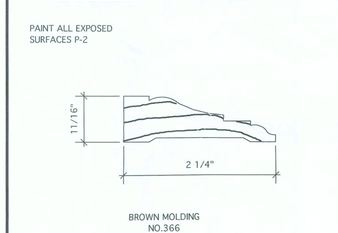

14 DETAL- WOOD TRIM- 'F'
SCALE: FUL SIZE

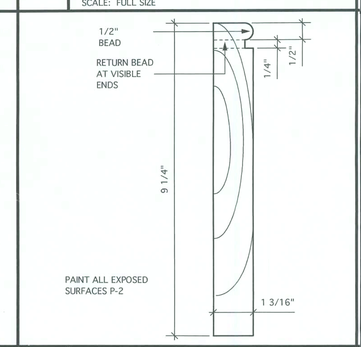

15 DETAIL - PLINTH
SCALE: 1/2 FULL

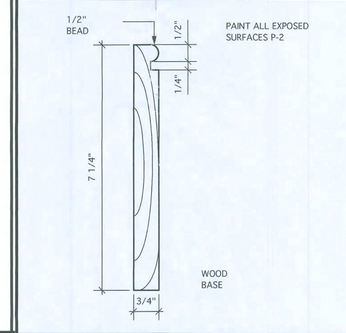

16 DETAIL - WOOD BASE
SCALE: 1/2 FULL

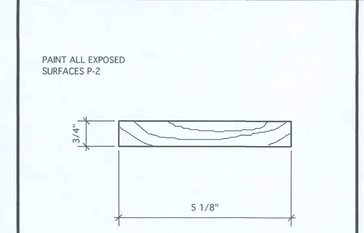

17 DETAIL - WOOD TRIM 'G'
SCALE: 1/2 FULL

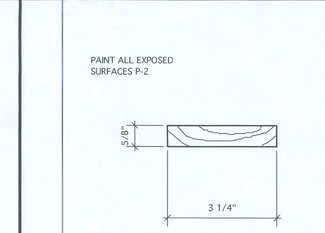

18 DETAIL - WOOD TRIM 'H'
SCALE: 1/2 FULL

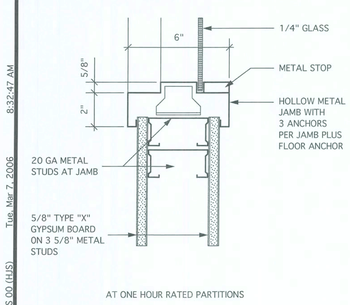

19 DETAIL - STOREFRONT JAMB
SCALE: 3" = 1'-0" HEAD, JAMB SIMILAR

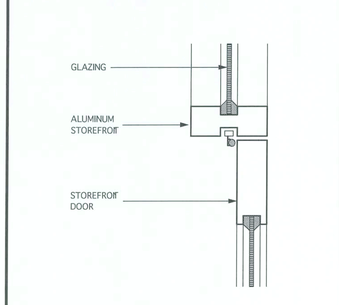

20 DETAL - STOREFRONT DR. JAMB
SCALE: 3"= 1'-0"

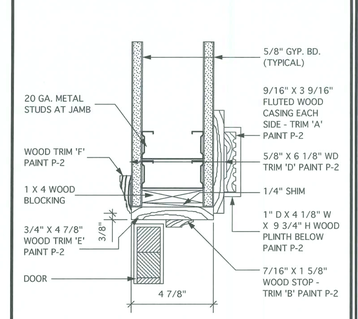

21 DETAIL - DOOR JAMB
SCALE: 3" = 1'-0" HEAD SIMILAR

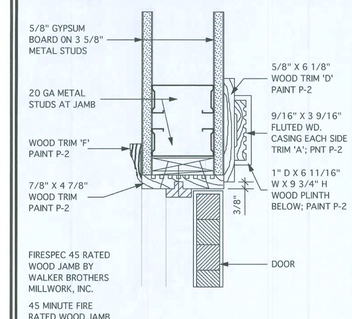

22 DETAIL - FIRE RATED WOOD JAMB
SCALE: 3" = 1'-0"

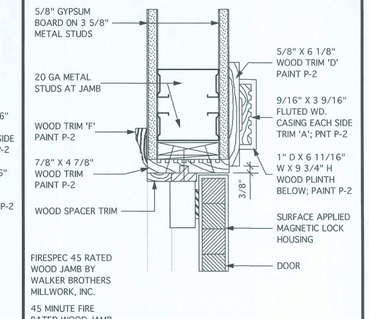

23 DETAIL - FIRE RATED WOOD HEAD
SCALE: 3" = 1'-0"

24

DESIGN SERVICES INCORPORATED
1778 N. PARK AVENUE, SUITE 100, MAITLAND, FL 32751,
TELEPHONE(407) 629-5755
LICENSE NO. F00061
ARCHITECTURE
INTERIOR DESIGN
SPACE PLANNING

WEST OFFICE
(NEW BRANCH BANK)
LAKE CITY, FLORIDA

PEOPLES STATE BANK

GENERA, NOTES

FASTENERS NOTES:

METAL STUD TO METAL STUD - MIN. 2 - №. 10 PAN HEAD SELF TAPPING SCREWS AT EACH JOINT

METAL STUD TO CONCRETE - HILTI - DNI 2PB POWER ACTUATED FASTENERS AT 12" O.C. AT CONTINUOUS TRACKS OR MIN. 2 Æ EACH JOINT - PROVIDE 1 1/4" PENETRATION

METAL STUD TO WOOD - NO. 10 FLAT HEÆD COUNTERSUNK SELF TAPPING SCREWS AT 12 O.C. AT CONTINUOUS TRACKS OR MIN.2 AT EACH JOINT - PROVIDE 1 1/4" PENETRATION

PLYWOOD TO METAL STUD - NO. 10 FLATHEAD COUNTERSUNK SELF TAPPING SCREWS AT 6" O.C. AT EDGES 12" O.C. INTERMEDIATE

2 X WOOD TO 2 X WOOD - STUD TO FLAT - TOE NAIL - 4- 8d COMMON STUD TO PLATE - FACE - 2 - 16d - COMMON STUD TO STUD - FACE - 2 - 16d COMMON

2 X WOOD TO CONCRETE - 1/4" TAPCONSAT 12" O.C. AT CONTINUOUS TRACKS OR MIN. 2 AT EACH JOINT - PROVIDE 1" PENERATION

PLYWOOD TO 2 X WOOD - 8d COMMON 6"O.C. AT EDGES, 12" O.C. INTERMEDIATE

1 2 3 4

INTERIOR ELEVATION KEY

NORTH
ACTUAL
PLAN

MARK	DATE	REVISIONS

COMM. NO:	06003.00	DRAWN:	KLP
DATE:	02/15/06	CHECKED:	ELM
SCALE:	AS NOTED		
FILE:	06003.00-DETAILS 01 (HJS).mcd		

DETAILS

HEAD, JAMB, SILLS

SEAL

ARCHITECT/CONSULTANT

EDDIE L. MUSE
JUN 07 2006
LICENSE NO. AR-12112

SHEET NUMBER
A-8.01

06003.00-DETAILS 00 (HJS) Tue, Mar 7, 2006 8:32:47 AM

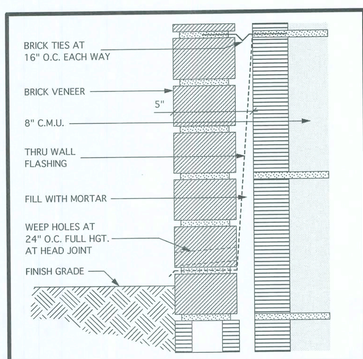

1 DETAIL - CAVITY WALL
SCALE: 3" = 1'-0" AT FOUNDATION

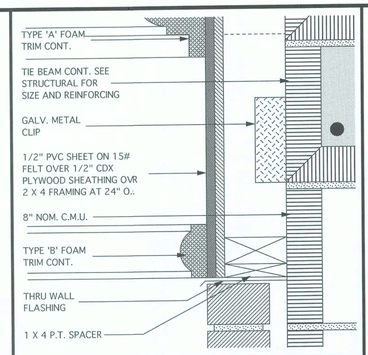

2 DETAIL - TRIM BAND
SCALE: 3" = '-0"

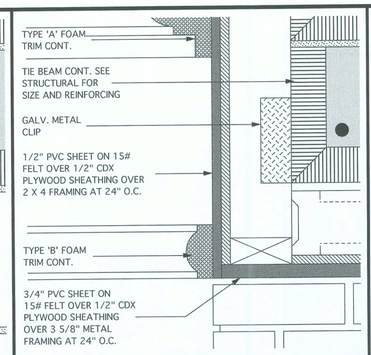

3 DETAIL - TRIM BAND
SCALE: 3" = 1'-0"

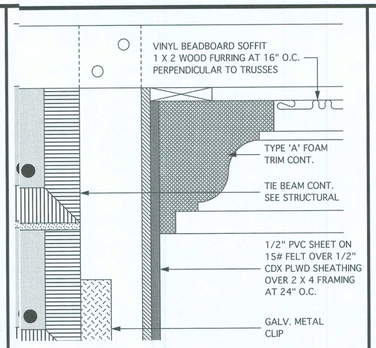

4 DETAIL - TRIM BAND
SCALE: 3" = 1'-0"

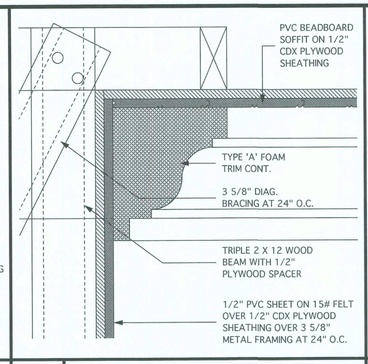

5 DETAIL - TRIM BAND
SCALE: 3" = 1'-0"

6

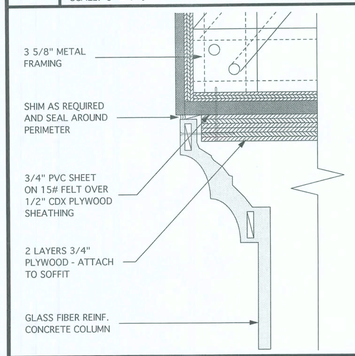

7 DETAIL - COLUMN CAPITAL
SCALE: 3" = 1'-0" AT 2-PIECE COLUMN

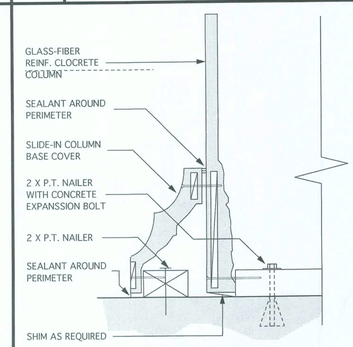

8 DETAIL - COLUMN BASE
SCALE: 3" = '-0" AT 2-PIECE COLUMN

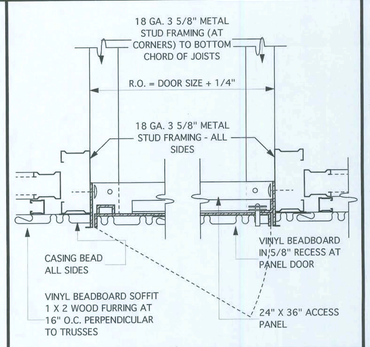

9 DETAIL - ACCESS PANEL
SCALE: 3" = 1'-0" AT DRIVE-IN CANOPY

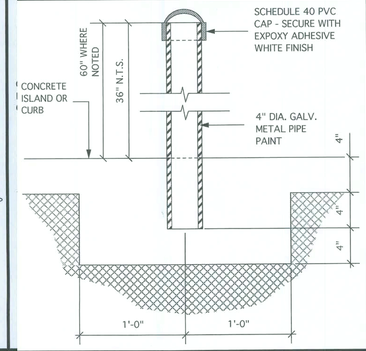

10 DETAIL - PIPE GUARD POST
SCALE: 1 1/2" = 1'-0" AT FOUNDATION

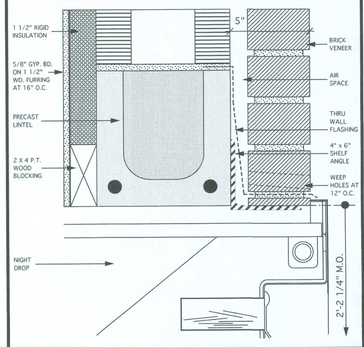

11 DETAIL - NIGHT DROP OPENING
SCALE: 3" = 1'-0" HEAD DETAIL

12

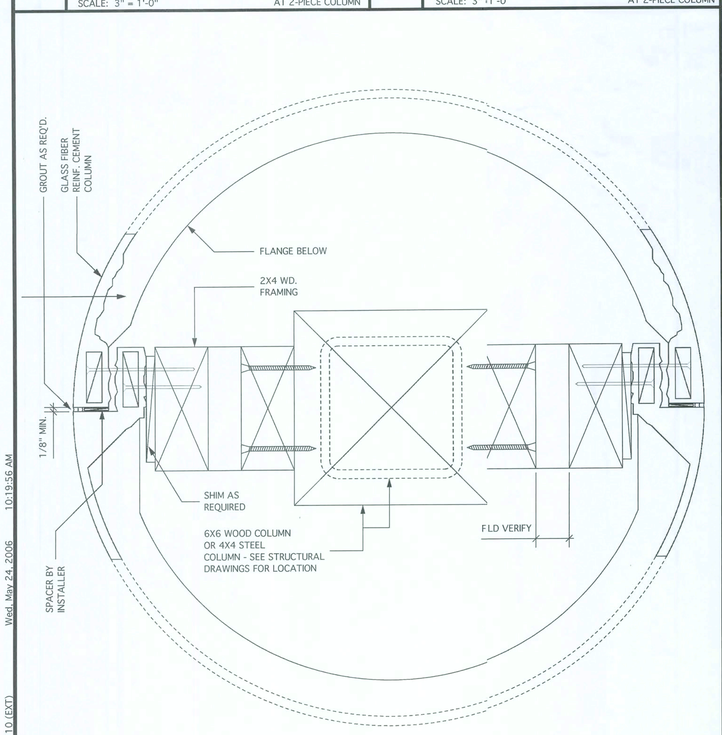

16 DETAIL - COLUMN JOINT
SCALE: 1/2 FULL AT 2-PIECE COLUMN

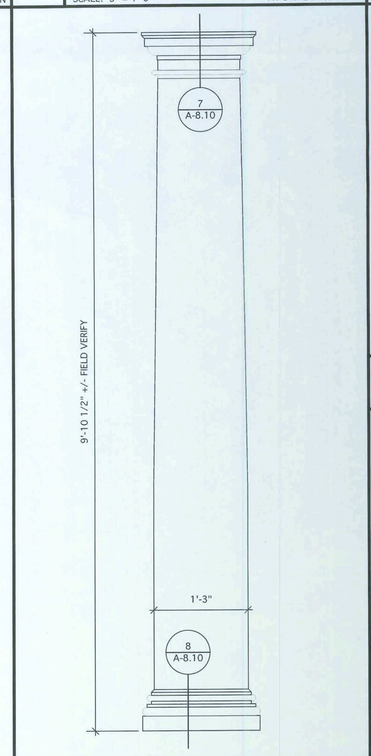

17 DETAIL - 15" COLUMN
SCALE: 1" = 1'-0"

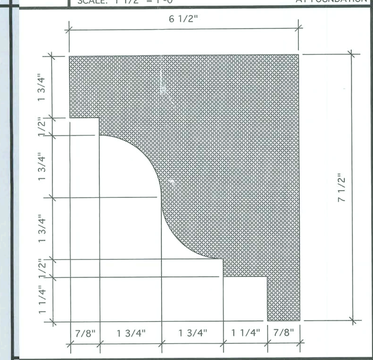

13 DETAIL - FOAM TRIM 'A'
SCALE: 1/2 FULL

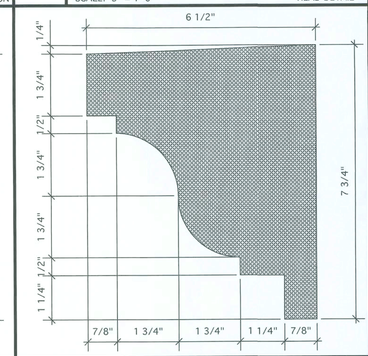

14 DETAIL - FOAM TRIM 'A-1'
SCALE: 1/2 FULL

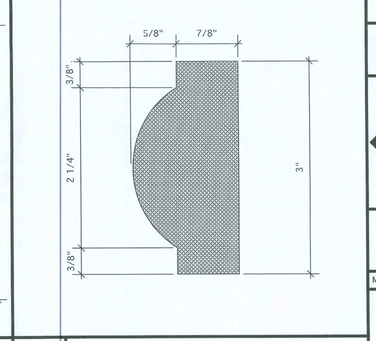

15 DETAIL - FOAM TRIM 'B'
SCALE: 1/2 FULL

18

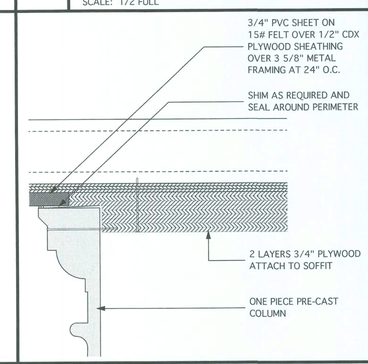

19 DETAIL - COLUMN CAPITAL
SCALE: 3" = 1'-0"

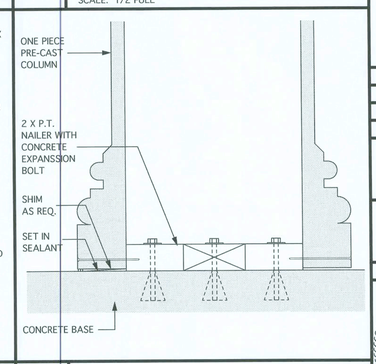

20 DETAIL - COLUMN BASE
SCALE: 3" = 1'-0"

DESIGN SERVICES INCORPORATED
1778 N. PARK AVENUE, SUITE 100, MAITLAND, FL 32751,
TELEPHONE(407) 629-5755
LICENSE NO. F00061
ARCHITECTURE INTERIOR DESIGN SPACE PLANNING

WEST OFFICE
(NEW BRANCH BANK)
LAKE CITY, FLORIDA

PEOPLES STATE BANK

GENERALNOTES

FASTENERS NOTES:

METAL STUD TO METAL STUD - MIN. 2 - NO.10 PAN HEAD SELF TAPPING SCREWS AT EACH JOINT

METAL STUD TO CONCRETE - HILTI - DNI 22B POWER ACTUATED FASTENERS AT 12" O.C. AT CONTINUOUS TRACKS OR MIN. 2 ATTACH JOINT - PROVIDE 1 1/4" PENETRATION

METAL STUD TO WOOD - NO. 10 FLAT HEACOUNTERSUNK SELF TAPPING SCREWS AT 12 O.C. AT CONTINUOUS TRACKS OR MIN. 2AT EACH JOINT - PROVIDE 1 1/4" PENETRATION

PLYWOOD TO METAL STUD - NO. 10 FLAT HAD COUNTERSUNK SELF TAPPING SCREWS AT 6" O.C. AT EDGES 12" O.C. INTERMEDIATE

2 X WOOD TO 2 X WOOD - STUD TO PLATE. TOE NAIL - 4- 8d COMMON STUD TO PLATE - FACE - 2 - 16d - COMMON STUD TOSTUD - FACE - 2 - 16d COMMON

2 X WOOD TO CONCRETE - 1/4" TAPCONS /I 12" O.C. AT CONTINUOUS TRACKS OR MIN. 2 AT EACH JOINT - PROVIDE 1" PENETATION

PLYWOOD TO 2 X WOOD - 8d COMMON 6" CC. AT EDGES, 12" O.C. INTERMEDIATE

INTERIOR ELEVATION KEY

NORTH
ACTUAL
PLAN

MARK	DATE	REVISIONS

COMM. NO:	06003.00	DRAWN:	KLP
DATE:	02/15/06	CHECKED:	ELM
SCALE:	AS NOTED		
FILE:	06003.00-DITAILS 10 (EXT)		

DETAILS

HEAD, JAMB, SILLS

SEAL

ARCHITECT/CONSULTANT
EDDIE L. MUSE
JUN 07 2006
LICENSE NO. AR-12112

SHEET NUMBER
A-8.10

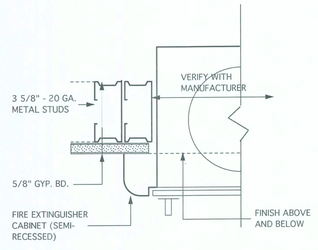

1 DETAIL - FIRE EXTINGUISHER CAB.
SCALE: 3" = 1'-0"

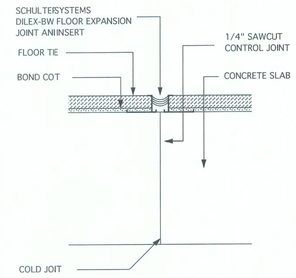

2 DETAIL - TILE JOINT
SCALE: 1/2 FULL

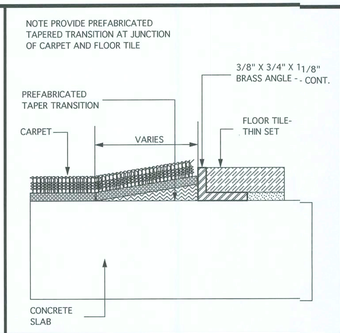

3 DETAIL - BRASS STRIP EDGE
SCALE: FULL SIZE

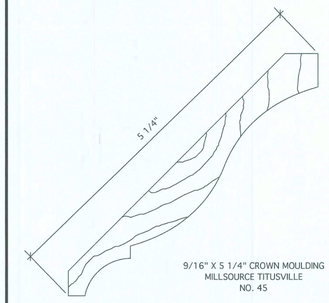

4 DETAIL - WOOD TRIM
SCALE: FULL SCALE

5

6

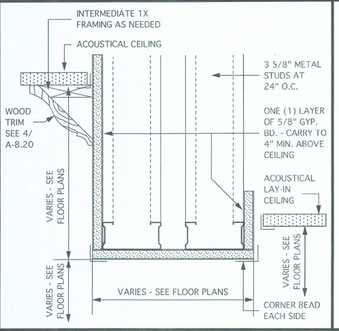

7 DETAIL - GYPSUM BOARD SOFFIT
SCALE: 3" = 1'-0"

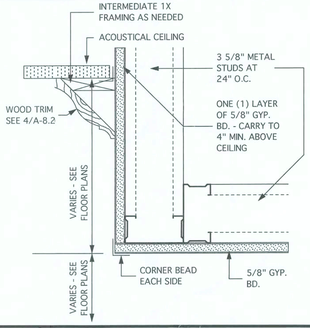

8 DETAIL - GYPSUM BOARD SOFFIT
SCALE: 3" = 1'-0"

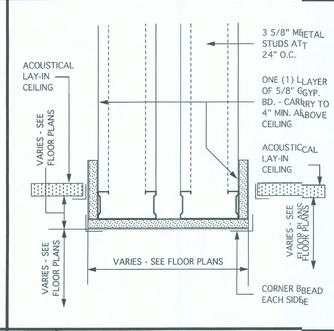

9 DETAIL - GYPSUM BD. BULKHEAD
SCALE: 3" = 1'-0"

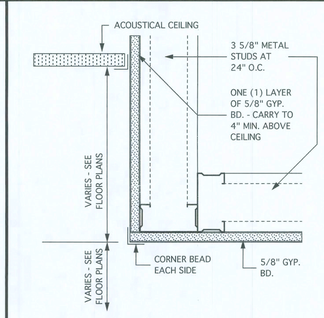

10 DETAIL - GYPSUM BOARD SOFFIT
SCALE: 3" = 1'-0"

11

12

13

14

15

16

17

18

19

20

21

22

23

24

DESIGN SERVICES INCORPORATED
1778 N. PARK AVENUE, SUITE 100, MAITLAND, FL 32751,
TELEPHONE(407) 629-5755
LICENSE NO. F00061
ARCHITECTURE INTERIOR DESIGN SPACE PLANNING

WEST OFFICE
(NEW BRANCH BANK)
LAKE CITY, FLORIDA

PEOPLES STATE BANK

GENERAL NOTES

FASTENERS NOTE:

METAL STUD TO METAL STID - MIN. 2 - NO. 10 PAN HEAD SELF TAPPING SCREWS AT EACH JOINT

METAL STUD TO CONCRETI- HILTI - DNI 22F8 POWER ACTUATED FASTENERS AT 12" O.C. AT CONTINUOUS TRACKS OR MIN. 2 AT EACH JOINT - PROVIDE 1 1/4" PENETRATION

METAL STUD TO WOOD - N0. 10 FLAT HEAD COUNTERSUNK SELF TAPPING SCREWS AT 12 O.C. AT CONTINUOUS TracKS OR MIN. 2 AT EACH JOINT - PROVIDE 1 1/4" PENETRATION

PLYWOOD TO METAL STUD- NO. 10 FLAT HEAD COUNTERSUNK SELF TAPPING SCREWS AT 6" O.C. AT EDGES 12" I.C. INTERMEDIATE

2 X WOOD TO 2 X WOOD - ITUD TO PLATE - TOE NAIL - 4- 8d COMMON STUD TO PLATE - FACE - 2 - 16d - CMMON STUD TO STUD - FACE - 2 - 16d COMMON

2 X WOOD TO CONCRETE -1/4" TAPCONS AT 12" O.C. AT CONTINUOUS TRACKS OR MIN. 2 AT EACH JOINT - PDVIDE 1" PENETRATION

PLYWOOD TO 2 X WOOD - d COMMON 6" O.C. AT EDGES, 12" O.C. INTERMEDIATE

1 2 3 4

INTERIOR ELEVATION KEY

NORTH
ACTUAL
PLAN

MARK	DATE	REVISIONS

COMM. NO:	06003.00	DRAWN:	KLP
DATE:	02/15/06	CHECKED:	ELM
SCALE:	AS NOTED		
FILE:	06D03.00-DETAILS 20 (INT)		

DETAILS

SEAL

ARCHITECT/CONSULTANT
EDDIE L. MUSE
JUN 07 2006
LICENSE NO. AR-12112

SHEET NUMBER
A-8.20

06D03.00-DETAILS 20 (INT) Wed, May 24, 2006 10:27:04 AM