DATE 11/04/2005

Columbia County Building Permit

This Permit Expires One Year From the Date of Issue

PERMIT
000023811

APPLICANT MACK ROBINSON PHONE 755-2492

ADDRESS 24262 HIGHWAY 129 O'BRIEN FL 32071

OWNER ROGER LITTLE, JR PHONE 623-1870

ADDRESS 401 SW LITTLE ROAD LAKE CITY FL 32024

CONTRACTOR MACK ROBINSON PHONE 755-2492

LOCATION OF PROPERTY 47S, TL ON 240, TL ON LITTLE ROAD, CURVE RIGHT, 2ND DRIVE ON RIGHT

TYPE DEVELOPMENT SFD,UTILITY ESTIMATED COST OF CONSTRUCTION 80750.00

HEATED FLOOR AREA 1615.00 TOTAL AREA 2596.00 HEIGHT .00 STORIES 1

FOUNDATION CONC WALLS FRAMED ROOF PITCH 7/12 FLOOR SLAB

LAND USE & ZONING A-3 MAX. HEIGHT 22

Minimum Set Back Requirments: STREET-FRONT 30.00 REAR 25.00 SIDE 25.00

NO. EX.D.U. 0 FLOOD ZONE X DEVELOPMENT PERMIT NO.

PARCEL ID 07-5S-17-09151-007 SUBDIVISION

LOT BLOCK PHASE UNIT TOTAL ACRES

000000876		RB0054287	A Mack Robinson	
Culvert Permit No.	Culvert Waiver	Contractor's License Number	Applicant/Owner/Contractor	
WAIVER	05-1076-N	BK	JH	Y
Driveway Connection	Septic Tank Number	LU & Zoning checked by	Approved for Issuance	New Resident

COMMENTS: SPECIAL FAMILY LOT PERMIT(GRANDSON)

Check # or Cash 8365

FOR BUILDING & ZONING DEPARTMENT ONLY

(footer/Slab)

Temporary Power _____ date/app. by Foundation _____ date/app. by Monolithic _____ date/app. by

Under slab rough-in plumbing _____ date/app. by Slab _____ date/app. by Sheathing/Nailing _____ date/app. by

Framing _____ date/app. by Rough-in plumbing above slab and below wood floor _____ date/app. by

Electrical rough-in _____ date/app. by Heat & Air Duct _____ date/app. by Peri. beam (Lintel) _____ date/app. by

Permanent power _____ date/app. by C.O. Final _____ date/app. by Culvert _____ date/app. by

M/H tie downs, blocking, electricity and plumbing _____ date/app. by Pool _____ date/app. by

Reconnection _____ date/app. by Pump pole _____ date/app. by Utility Pole _____ date/app. by

M/H Pole _____ date/app. by Travel Trailer _____ date/app. by Re-roof _____ date/app. by

BUILDING PERMIT FEE $ 405.00 CERTIFICATION FEE $ 12.98 SURCHARGE FEE $ 12.98

MISC. FEES $ .00 ZONING CERT. FEE $ 50.00 FIRE FEE $ .00 WASTE FEE $

FLOOD DEVELOPMENT FEE $ FLOOD ZONE FEE $ 25.00 CULVERT FEE $ **TOTAL FEE** 505.96

INSPECTORS OFFICE _____ CLERKS OFFICE CH

NOTICE: IN ADDITION TO THE REQUIREMENTS OF THIS PERMIT, THERE MAY BE ADDITIONAL RESTRICTIONS APPLICABLE TO THIS PROPERTY THAT MAY BE FOUND IN THE PUBLIC RECORDS OF THIS COUNTY. AND THERE MAY BE ADDITIONAL PERMITS REQUIRED FROM OTHER GOVERNMENTAL ENTITIES SUCH AS WATER MANAGEMENT DISTRICTS, STATE AGENCIES, OR FEDERAL AGENCIES.

"WARNING TO OWNER: YOUR FAILURE TO RECORD A NOTICE OF COMMENCEMENT MAY RESULT IN YOUR PAYING TWICE FOR IMPROVEMENTS TO YOUR PROPERTY. IF YOU INTEND TO OBTAIN FINANCING, CONSULT WITH YOUR LENDER OR AN ATTORNEY BEFORE RECORDING YOUR NOTICE OF COMMENCEMENT."

This Permit Must Be Prominently Posted on Premises During Construction

PLEASE NOTIFY THE COLUMBIA COUNTY BUILDING DEPARTMENT AT LEAST 24 HOURS IN ADVANCE OF EACH INSPECTION, IN ORDER THAT IT MAY BE MADE WITHOUT DELAY OR INCONVIENCE, PHONE 758-1008. THIS PERMIT IS NOT VALID UNLESS THE WORK AUTHORIZED BY IT IS COMMENCED WITHIN 6 MONTHS AFTER ISSUANCE.

The Issuance of this Permit Does Not Waive Compliance by Permittee with Deed Restrictions.

Meggie

Columbia County Building Department
Culvert Waiver

Culvert Waiver No.
000000876

DATE: 11/04/2005 BUILDING PERMIT NO. 23811

APPLICANT MACK ROBINSON PHONE 755-2492

ADDRESS 24262 HIGHWAY 129 O'BRIEN FL 32071

OWNER ROGER LITTLE, JR PHONE 623-1870

ADDRESS 401 SW LITTLE ROAD LAKE CITY FL 32024

CONTRACTOR MACK ROBINSON PHONE 755-2492

LOCATION OF PROPERTY 47S, TL ON 240, TL ON LITTLE ROAD, AROUND RIGHT CURVE, 2ND ON RIGHT

SUBDIVISION/LOT/BLOCK/PHASE/UNIT

PARCEL ID # 07-5S-17-09151-007

I HEREBY CERTIFY THAT I UNDERSTAND AND WILL FULLY COMPLY WITH THE DECISION OF THE COLUMBIA COUNTY PUBLIC WORKS DEPARTMENT IN CONNECTION WITH THE HEREIN PROPOSED APPLICATION.

SIGNATURE: R Mack Robinson

A SEPARATE CHECK IS REQUIRED
MAKE CHECKS PAYABLE TO BCC

Amount Paid 50.00

PUBLIC WORKS DEPARTMENT USE ONLY

I HEREBY CERTIFY THAT I HAVE EXAMINED THIS APPLICATION AND DETERMINED THAT THE CULVERT WAIVER IS:

✓ APPROVED _____ NOT APPROVED - NEEDS A CULVERT PERMIT

COMMENTS:

SIGNED: Perry Lott DATE: 11/10/05

ANY QUESTIONS PLEASE CONTACT THE PUBLIC WORKS DEPARTMENT AT 386-752-5955.

COLUMBIA COUNTY
NOV 08 2005
PUBLIC WORKS DEPT.

135 NE Hernando Ave., Suite B-21
Lake City, FL 32055
Phone: 386-758-1008 Fax: 386-758-2160

COLUMBIA COUNTY · GATEWAY TO FLORIDA

Columbia County Building Permit Application

CK# 8365 Revised 9-23-04

For Office Use Only Application # 0510-79 Date Received 10/27 By TW Permit # 876/23811

Application Approved by - Zoning Official BLK Date 01.11.05 Plans Examiner DK JTH Date 11-2-05

Flood Zone X Development Permit N/A Zoning A-3 Land Use Plan Map Category A-3

Comments ~~SEE 2001 PROPOSED #~~ SECTION 14.9 Special Family Lot Permit Grandfa

SITE PLAN ON SHEET 1

Applicants Name Mack Robinson Phone 755 2492 935-4468

Address 24262 HW 129 O'Brien Fl 32071

Owners Name Roger Little Jr Phone 623-1870

911 Address 407 SW Little Rd 32024

Contractors Name Mack Robinson Const Phone 755 2492

Address 24262 HW 129 O'Brien Fl 32071

Fee Simple Owner Name & Address First Federal Savings

Bonding Co. Name & Address

Architect/Engineer Name & Address Jim Delbene (arch) Mark Disoway (eng)

Mortgage Lenders Name & Address First Federal Lake City

Circle the correct power company - FL Power & Light - (Clay Elec.) - Suwannee Valley Elec. - Progressive Energy

Property ID Number 07-5S-17-09151-007 Estimated Cost of Construction $128,000

Subdivision Name NA Lot ____ Block ____ Unit ____ Phase ____

Driving Directions State Rd 47 south, TL on Co Rd 240 through S curve TL on Little Rd go around RH curve second drive on right follow easement to site

Type of Construction New house - SFD Number of Existing Dwellings on Property 0

Total Acreage 1 Lot Size ____ Do you need a - Culvert Permit or (Culvert Waiver) or Have an Existing Drive

Actual Distance of Structure from Property Lines - Front 79+ Side 79+ Side 79+ Rear 79+

Total Building Height 22'2" Number of Stories 1 Heated Floor Area 1615 Roof Pitch 7/12

Porches 469 GARAGE 512 TOTAL 2596

Application is hereby made to obtain a permit to do work and installations as indicated. I certify that no work or installation has commenced prior to the issuance of a permit and that all work be performed to meet the standards of all laws regulating construction in this jurisdiction.

OWNERS AFFIDAVIT: I hereby certify that all the foregoing information is accurate and all work will be done in compliance with all applicable laws and regulating construction and zoning.

WARNING TO OWNER: YOUR FAILURE TO RECORD A NOTICE OF COMMENCMENT MAY RESULT IN YOU PAYING TWICE FOR IMPROVEMENTS TO YOUR PROPERTY. IF YOU INTEND TO OBTAIN FINANCING, CONSULT WITH YOUR LENDER OR ATTORNEY BEFORE RECORDING YOUR NOTICE OF COMMENCEMENT.

Owner Builder or Agent (Including Contractor)

Mack Robinson
Contractor Signature

Contractors License Number RB 0054287

Competency Card Number 5529

STATE OF FLORIDA
COUNTY OF COLUMBIA

LAURIE HODGES
MY COMMISSION # DD 333503
EXPIRES: June 28, 2008
Bonded Thru Notary Public Underwriters

NOTARY STAMP/SEAL

Sworn to (or affirmed) and subscribed before me this 27 day of 10 2005.

Personally known ✓ or Produced Identification ____

Notary Signature

ADVISED MARK ON 11-02-05 -

COLUMBIA COUNTY BUILDING DEPARTMENT
CHECKLIST FOR PERMITTING

Application # 0510-79

✓ **Notarized completed Building Permit Application**
Notes:

N/A **If an Owner Builder, signed Disclosure Statement**
Notes:

✓ **Recorded Deed or a Notarized Affidavit (form from the Building Dept.)**
Notes:

✓ **Approved and Signed Site Plan from Environmental Health on the septic**
Notes:

✓ **Site plan with actual distances of the structure to each property line**
Notes:

✓ **911 Address form, Contact 386.752.8787 for an appointment**
Notes:

✓ **Residential or Commercial Checklist completed**
Notes:

✓ **Driving directions including all road names**
Notes:

✓ **Well information (on plans or letter from the well driller)**
Notes:

? **Before the 1st inspection Recorded Notice of Commencement signed by owner**
Notes: PENDING

✓ **2 sets of plans (blueprints)**
Notes:

✓ **2 sets of sealed truss engineering**
Notes:

✓ **2 sets of energy code & manual J**
Notes:

✓ **2 sets of engineering packets including specs on windows, doors, roof and etc.**
Notes:

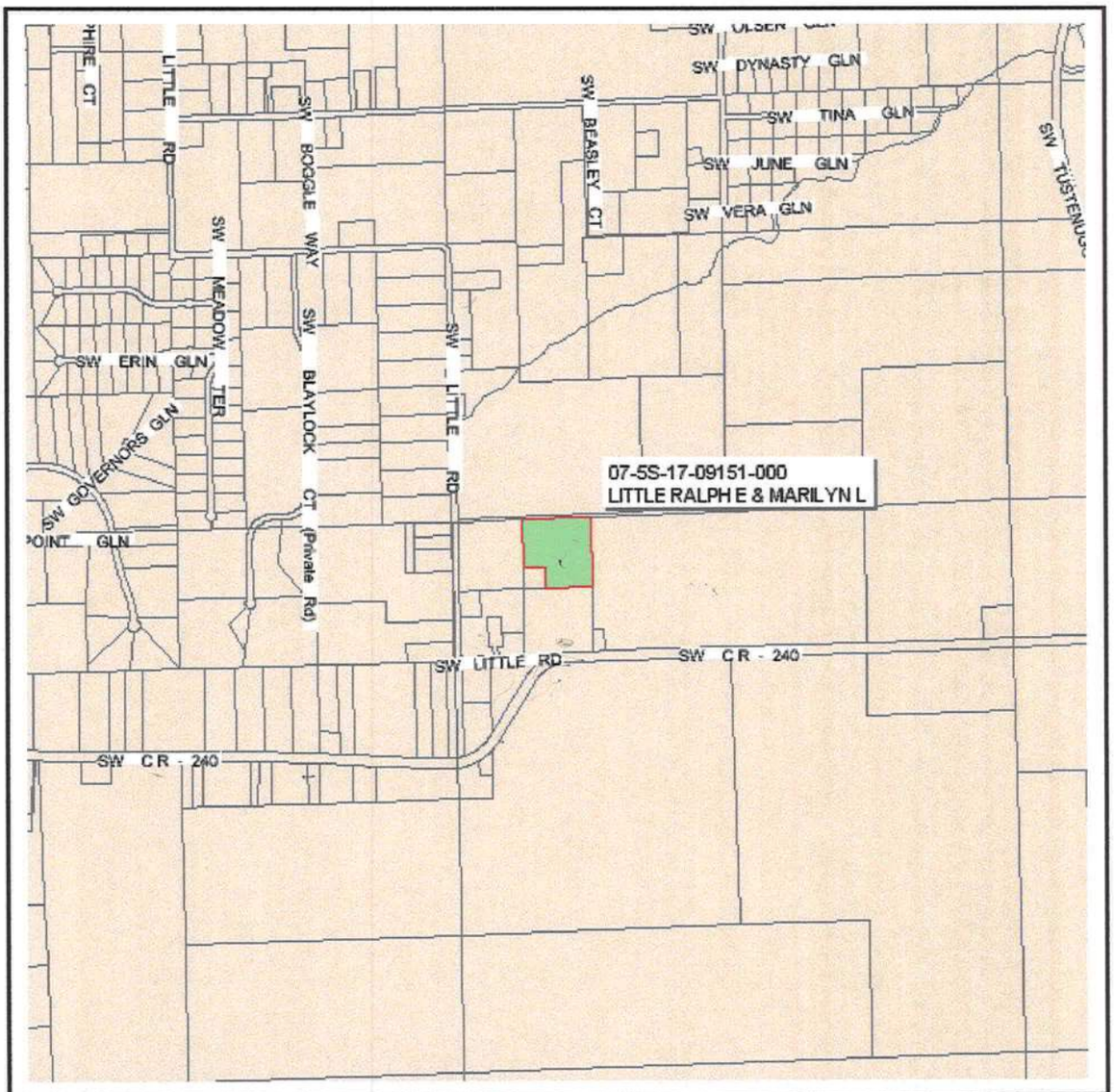

Columbia County Property Appraiser

J. Doyle Crews, CFA - Lake City, Florida - 386-758-1083

PARCEL: 07-5S-17-09151-000 - TIMBERLAND (005500)

NE1/4 OF NW1/4 OF NW1/4, EX 1 AC DESC ORB 1051-163. ORB 368-269,

Name:	LITTLE RALPH E & MARILYN L	LandVal	$0.00
Site:		BldgVal	$0.00
Mail:	559 SW LITTLE RD LAKE CITY, FL 32024	ApprVal	$1,980.00
		JustVal	$29,160.00
Sales Info		Assd	$1,980.00
		Exmpt	$0.00
		Taxable	$1,980.00

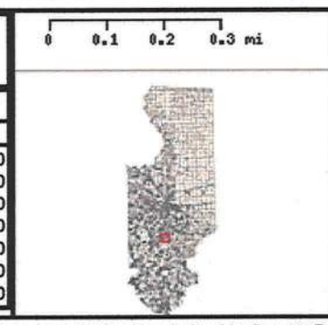

This information, GIS Map Updated: 8/3/2005, was derived from data which was compiled by the Columbia County Property Appraiser Office solely for the governmental purpose of property assessment. This information should not be relied upon by anyone as a determination of the ownership of property or market value. No warranties, expressed or implied, are provided for the accuracy of the data herein, it's use, or it's interpretation. Although it is periodically updated, this information may not reflect the data currently on file in the Property Appraiser's office. The assessed values are NOT certified values and therefore are subject to change before being finalized for ad valorem assessment purposes.

This Instrument Prepared By:
Marilyn Little
559 SW Little Road
Lake City, Florida 32024

PARCEL NO: 07-5S-17-09151-000

Inst:2005015958 Date:07/07/2005 Time:10:02
Doc Stamp-Deed : 0.70
MK DC,P.DeWitt Cason,Columbia County B:1051 P:163

WARRANTY DEED

This Warranty Deed, made the 7th day of July 2005, by **Ralph Edwin & Marilyn L. Nettles Little , husband and wife,** hereinafter called the Grantor, to **Roger Edwin Little, Jr.** a single man whose post office address is 160 SW Crescent Street, Lake City, Florida 32025 hereinafter called the Grantee.

(Wherever used herein the terms "Grantor" and "Grantee" shall include singular and plural, heirs, legal representatives, and assigns of individuals, and the successors and assigns of corporations, wherever the context so admits or requires.)

WITNESSETH: That the Grantor, for and in consideration of the sum of TEN DOLLARS ($10.00) and other valuable considerations, receipt whereof is hereby acknowledged, by these presents does grant, bargain, sell, alien, remise, release, convey and confirm unto the Grantee all that certain land situate, lying and being in COLUMBIA County, State of Florida, viz:

SEE SCHEDULE "A" ATTACHED

*** Before the above mentioned property can be sold Ralph Edwin Little or Marilyn Nettles Little must be given first right of refusal to purchase said property. Roger Edwin Little Sr. must be given second right of refusal. Teresa Rose Little Metrick must be given third right of refusal**

Together, with all the tenements, hereditaments and appurtenances thereto belonging or in anywise appertaining. **To Have and to Hold,** the same in fee simple forever.

And the Grantor hereby covenants with said grantee that the grantor is lawfully seized of said land in fee simple; that the grantor has good right and lawful authority to sell and convey said land, and hereby warrants the title to said land and will defend the same against the lawful claims of all persons whomsoever; and that said land is free of all encumbrances, except taxes acccruing subsequent to December 31, 2004.

In Witness Whereof, the said grantor has signed and sealed these presents the day and year first above written.

Signed, sealed and delivered in the presence of:

Witness Signature

Judith M. Conklin
Printed Name

Pamlyn Douglas
Witness Signature

Pamlyn Douglas
Printed Name

Ralph Edwin Little
RALPH EDWIN LITTLE

Marilyn L. Nettles Little
MARILYN L. NETTLES LITTLE

STATE OF FLORIDA
COUNTY OF COLUMBIA

I hereby certify that on this day, before me, an officer duly authorized to administer oaths and take acknowledgments, personally appeared **RALPH EDWIN LITTLE & MARILYN L NETTLES LITTLE** known to me to be the persons ~~one~~ described in and who executed the foregoing instrument , who acknowledged before me that they executed the same, and an oath was not taken. (Check one:) ___ Said person(s) is personally known to me. ✓ Said person(s) provided the following type of identification: Florida Driver's License (picture ID)

Witness my hand and official seal in the County and State last aforesaid
This 7 day of July, 2005.

Marilyn S Montgomery
Notary Signature

MARILYN S. MONTGOMERY
Printed Name

Notary Public State of Florida
Marylyn S Montgomery
My Commission DD404954
Expires 04/19/2009

SCHEDULE "A"

DESCRIPTION

COMMENCE at the Northeast corner of the Northwest 1/4 of the Northwest 1/4 of Section 7, Township 5 South, Range 17 East, Columbia County, Florida and run South 88°34'37" West along the North line of said Section 7 a distance of 661.15 feet to the Northwest corner of the Northeast 1/4 of the Northwest 1/4 of the Northwest 1/4 of Section 7; thence South 00°10'02" West along the West line of the Northeast 1/4 of the Northwest 1/4 of the Northwest 1/4 of Section 7 a distance of 453.29 feet to the POINT OF BEGINNING; thence North 88°37'47" East along a line parallel to the South line of the Northeast 1/4 of the Northwest 1/4 of the Northwest 1/4 of Section 7 a distance of 208.71 feet; thence South 00°10'02" West along a line parallel to the West line of the Northeast 1/4 of the Northwest 1/4 of the Northwest 1/4 of Section 7 a distance of 208.71 feet to a point on the South line of the Northeast 1/4 of the Northwest 1/4 of the Northwest 1/4 of Section 7; thence South 88°37'47" West along said South line of the Northeast 1/4 of the Northwest 1/4 of the Northwest 1/4 of Section 7 a distance of 208.71 feet to the Southwest corner of the Northeast 1/4 of the Northwest 1/4 of the Northwest 1/4 of Section 7; thence North 00°10'02" East along the West line of the Northeast 1/4 of the Northwest 1/4 of the Northwest 1/4 of Section 7 a distance of 208.71 feet to the POINT OF BEGINNING. Containing 1.00 acres, more or less.

Inst:2005015958 Date:07/07/2005 Time:10:02
Doc Stamp-Deed : 0.70
DC,P.DeWitt Cason,Columbia County B:1051 P:164

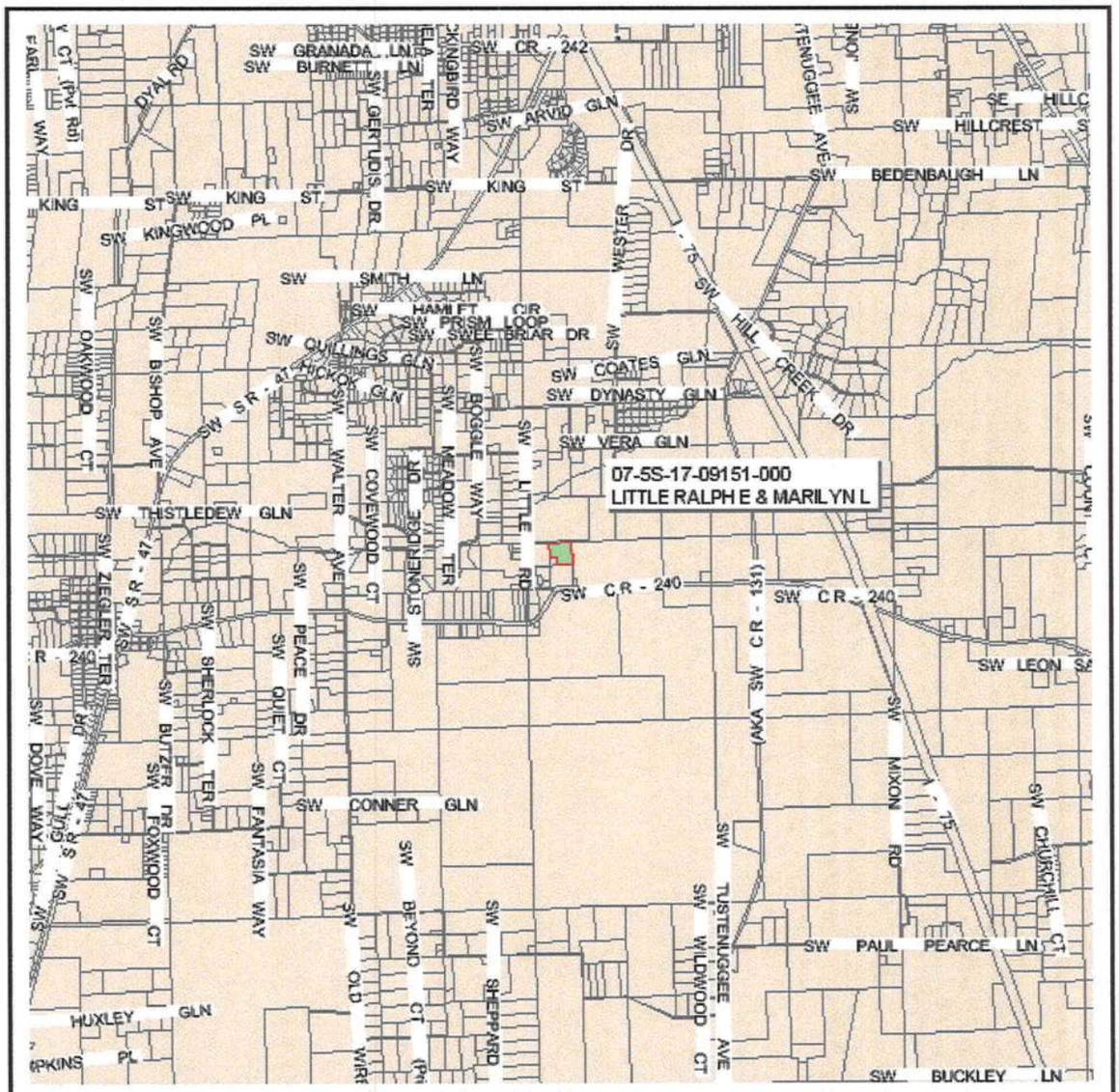

Columbia County Property Appraiser

J. Doyle Crews, CFA - Lake City, Florida - 386-758-1083

PARCEL: 07-5S-17-09151-000 - TIMBERLAND (005500)

NE1/4 OF NW1/4 OF NW1/4, EX 1 AC DESC ORB 1051-163. ORB 368-269,

Name:	LITTLE RALPH E & MARILYN L	LandVal	$0.00
Site:		BldgVal	$0.00
Mail:	559 SW LITTLE RD LAKE CITY, FL 32024	ApprVal	$1,980.00
		JustVal	$29,160.00
Sales		Assd	$1,980.00
Info		Exmpt	$0.00
		Taxable	$1,980.00

0 0.3 0.6 0.9 mi

N W E S

This information, GIS Map Updated: 8/3/2005, was derived from data which was compiled by the Columbia County Property Appraiser Office solely for the governmental purpose of property assessment. This information should not be relied upon by anyone as a determination of the ownership of property or market value. No warranties, expressed or implied, are provided for the accuracy of the data herein, it's use, or it's interpretation. Although it is periodically updated, this information may not reflect the data currently on file in the Property Appraiser's office. The assessed values are NOT certified values and therefore are subject to change before being finalized for ad valorem assessment purposes.

Application for Onsite Sewage Disposal System Construction Permit. Part II Site Plan

Permit Application Number: 05-1076N

ALL CHANGES MUST BE APPROVED BY THE COUNTY HEALTH UNIT

LITTLE JR/CR 05-3151

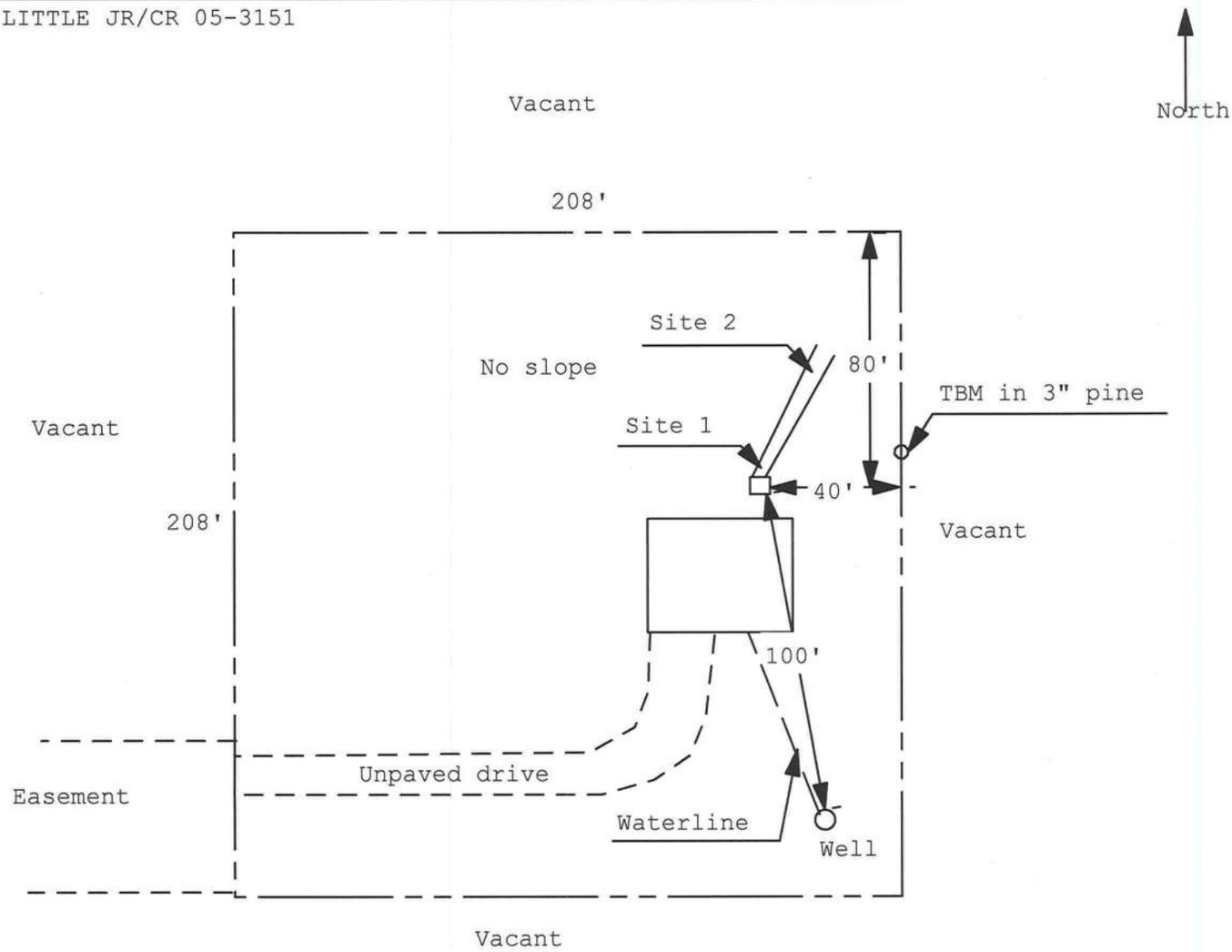

1 inch = 50 feet

Site Plan Submitted By Paul Lloyd **Date** 10/14/05

Plan Approved ✓ **Not Approved** ____ **Date** 10/25/05

By [illegible] Columbia **CPHU**

Notes:

COLUMBIA COUNTY 9-1-1 ADDRESSING

263 NW Lake City Ave. * P. O. Box 1787 * Lake City, FL 32056-1787
PHONE: (386) 758-1125 * FAX: (386) 758-1365 * Email: ron_croft@columbiacountyfla.com

Addressing Maintenance

To maintain the Countywide Addressing Policy you must make application for a 9-1-1 Address at the time you apply for a building permit. The established standards for assigning and posting numbers to all principal buildings, dwellings, businesses and industries are contained in Columbia County Ordinance 2001-9. The addressing system is to enable Emergency Service Agencies to locate you in an emergency, and to assist the United States Postal Service and the public in the timely and efficient provision of services to residents and businesses of Columbia County.

DATE ISSUED: October 21, 2005

ENHANCED 9-1-1 ADDRESS:

401 SW LITTLE RD (LAKE CITY, FL 32024)

Addressed Location 911 Phone Number: NOT AVAIL.

OCCUPANT NAME: NOT AVAIL.

OCCUPANT CURRENT MAILING ADDRESS:

PROPERTY APPRAISER PARCEL NUMBER: 07-5S-17-09151-007

Other Contact Phone Number (If any):

Building Permit Number (If known):

Remarks:

Address Issued By: _____
Columbia County 9-1-1 Addressing / GIS Department

NOTICE: THIS ADDRESS WAS ISSUED BASED ON LOCATION INFORMATION RECEIVED FROM THE REQUESTER. SHOULD, AT A LATER DATE, THE LOCATION INFORMATION BE FOUND TO BE IN ERROR, THIS ADDRESS IS SUBJECT TO CHANGE.

COLUMBIA COUNTY
9-1-1 ADDRESSING
APPROVED

RON E. BIAS
WELL DRILLING

317 SW Brecken Ridge • Fort White, FL 32038
(386) 497-1045 • *Mobile:* (386) 364-9233 • *Fax:* (386) 497-1045

No. _____

Date: _____

Name: Mack Robertson

Address: _____

_____

Phone: ~~Fax~~ 935-4468

DESCRIPTION:
4" Deep Well Down to 100'
1 hp Sub. pump 20 Gpm
80 t Gallon Captive
Constant pressure tank
1 1/4 drop system with back
flow preventer
SRWMD permit

Total: _____

Deposit: _____

Balance: _____

Date Wanted: _____

Authorized By: Ron E Bias

Received By: _____

FORM 600A-2001

FLORIDA ENERGY EFFICIENCY CODE FOR BUILDING CONSTRUCTION

Florida Department of Community Affairs

Residential Whole Building Performance Method A

Project Name:	**Roger Little Residence**	Builder:	Mack Robinson
Address:	Lot: n/a, Sub: NW/4 of NW/4, Plat: SEC 7 T-5-S R-17-E	Permitting Office:	Columbia Co.
City, State:	Lake City, FL 32055-	Permit Number:	
Owner:	Roger Little, Jr.	Jurisdiction Number:	~~121000~~ 221000
Climate Zone:	North		

1. New construction or existing		New	__
2. Single family or multi-family		Single family	__
3. Number of units, if multi-family		1	__
4. Number of Bedrooms		3	__
5. Is this a worst case?		No	__
6. Conditioned floor area (ft²)		1615 ft²	
7. Glass area & type	Single Pane	Double Pane	__
a. Clear glass, default U-factor	0.0 ft²	222.0 ft²	__
b. Default tint	0.0 ft²	0.0 ft²	__
c. Labeled U or SHGC	0.0 ft²	0.0 ft²	
8. Floor types			__
a. Slab-On-Grade Edge Insulation		R=0.0, 193.0(p) ft	__
b. N/A			__
c. N/A			
9. Wall types			__
a. Frame, Wood, Exterior		R=13.0, 1261.0 ft²	__
b. N/A			__
c. N/A			__
d. N/A			__
e. N/A			
10. Ceiling types			__
a. Under Attic		R=30.0, 1615.0 ft²	__
b. N/A			__
c. N/A			
11. Ducts			__
a. Sup: Unc. Ret: Unc. AH: Interior		Sup. R=6.0, 30.0 ft	__
b. N/A			

12. Cooling systems		
a. Central Unit	Cap: 35.0 kBtu/hr	__
	SEER: 12.00	__
b. N/A		__
		__
c. N/A		__
		__
13. Heating systems		
a. Electric Heat Pump	Cap: 35.0 kBtu/hr	__
	HSPF: 7.90	__
b. N/A		__
		__
c. N/A		__
		__
14. Hot water systems		
a. Electric Resistance	Cap: 30.0 gallons	__
	EF: 0.90	__
b. N/A		__
		__
c. Conservation credits (HR-Heat recovery, Solar DHP-Dedicated heat pump)		__
15. HVAC credits (CF-Ceiling fan, CV-Cross ventilation, HF-Whole house fan, PT-Programmable Thermostat, MZ-C-Multizone cooling, MZ-H-Multizone heating)	PT, CF,	__

Glass/Floor Area: 0.14	Total as-built points: 21065 Total base points: 25232	PASS

I hereby certify that the plans and specifications covered by this calculation are in compliance with the Florida Energy Code.

PREPARED BY: Tim Delbene

DATE: 8/25/05 T. Delbene

I hereby certify that this building, as designed, is in compliance with the Florida Energy Code.

OWNER/AGENT: _____

DATE: _____

Review of the plans and specifications covered by this calculation indicates compliance with the Florida Energy Code. Before construction is completed this building will be inspected for compliance with Section 553.908 Florida Statutes.

GREAT SEAL OF THE STATE OF FLORIDA — IN GOD WE TRUST

BUILDING OFFICIAL: _____

DATE: _____

EnergyGauge® (Version: FLRCPB v3.30)

FORM 600A-2001

SUMMER CALCULATIONS

Residential Whole Building Performance Method A - Details

ADDRESS: **Lot: n/a, Sub: NW/4 of NW/4, Plat: SEC 7 T-5-S R-17-E, Lake City, FL 32055**

BASE				AS-BUILT							
GLASS TYPES .18 X Conditioned Floor Area		X BSPM	= Points	Type/SC	Overhang Ornt	Len	Hgt	Area X	SPM X	SOF	= Points
.18	1615.0	20.04	5825.6	Double, Clear	N	2.0	7.0	30.0	19.20	0.92	531.2
				Double, Clear	N	2.0	3.0	3.0	19.20	0.78	44.8
				Double, Clear	S	2.0	5.0	6.0	35.87	0.72	155.7
				Double, Clear	S	2.0	5.0	9.0	35.87	0.72	233.5
				Double, Clear	E	2.0	7.0	45.0	42.06	0.89	1676.9
				Double, Clear	E	10.0	7.0	30.0	42.06	0.44	557.2
				Double, Clear	E	2.0	5.0	9.0	42.06	0.80	301.7
				Double, Clear	W	10.0	7.0	60.0	38.52	0.46	1056.5
				Double, Clear	W	13.0	7.0	30.0	38.52	0.42	480.7
				As-Built Total:				**222.0**			**5038.2**

WALL TYPES	Area X	BSPM	= Points	Type	R-Value	Area X	SPM	= Points
Adjacent	0.0	0.00	0.0	Frame, Wood, Exterior	13.0	1261.0	1.50	1891.5
Exterior	1261.0	1.70	2143.7					
Base Total:	**1261.0**		**2143.7**	**As-Built Total:**		**1261.0**		**1891.5**

DOOR TYPES	Area X	BSPM	= Points	Type	Area X	SPM	= Points
Adjacent	21.0	2.40	50.4	Exterior Insulated	21.0	4.10	86.1
Exterior	42.0	6.10	256.2	Exterior Insulated	21.0	4.10	86.1
				Adjacent Insulated	21.0	1.60	33.6
Base Total:	**63.0**		**306.6**	**As-Built Total:**	**63.0**		**205.8**

CEILING TYPES	Area X	BSPM	= Points	Type	R-Value	Area X	SPM X SCM	= Points
Under Attic	1615.0	1.73	2793.9	Under Attic	30.0	1615.0	1.73 X 1.00	2793.9
Base Total:	**1615.0**		**2793.9**	**As-Built Total:**		**1615.0**		**2793.9**

FLOOR TYPES	Area X	BSPM	= Points	Type	R-Value	Area X	SPM	= Points
Slab	193.0(p)	-37.0	-7141.0	Slab-On-Grade Edge Insulation	0.0	193.0(p	-41.20	-7951.6
Raised	0.0	0.00	0.0					
Base Total:			**-7141.0**	**As-Built Total:**		**193.0**		**-7951.6**

INFILTRATION	Area X	BSPM	= Points	Area X	SPM	= Points
	1615.0	10.21	16489.2	1615.0	10.21	16489.2

FORM 600A-2001

SUMMER CALCULATIONS

Residential Whole Building Performance Method A - Details

ADDRESS: **Lot: n/a, Sub: NW/4 of NW/4, Plat: SEC 7 T-5-S R-17-E, Lake City, FER32055**

BASE				AS-BUILT							
Summer Base Points:			**20418.0**	**Summer As-Built Points:**							**18467.0**
Total Summer Points	X System Multiplier	=	Cooling Points	Total Component	X Cap Ratio	X Duct Multiplier (DM x DSM x AHU)	X System Multiplier	X Credit Multiplier	= Cooling Points		
				18467.0	1.000	(1.090 x 1.147 x 0.91)	0.284	0.902	5393.0		
20418.0	**0.4266**		**8710.3**	**18467.0**	**1.00**	**1.138**	**0.284**	**0.902**	**5393.0**		

FORM 600A-2001

WINTER CALCULATIONS

Residential Whole Building Performance Method A - Details

ADDRESS: **Lot: n/a, Sub: NW/4 of NW/4, Plat: SEC 7 T-5-S R-17-E, Lake City, FL 32055**

BASE				AS-BUILT							
GLASS TYPES .18 X Conditioned Floor Area		X BWPM	= Points	Type/SC	Overhang Ornt	Len	Hgt	Area X	WPM X	WOF	= Points
.18	1615.0	12.74	3703.5	Double, Clear	N	2.0	7.0	30.0	24.58	1.00	739.8
				Double, Clear	N	2.0	3.0	3.0	24.58	1.01	74.7
				Double, Clear	S	2.0	5.0	6.0	13.30	1.40	111.7
				Double, Clear	S	2.0	5.0	9.0	13.30	1.40	167.6
				Double, Clear	E	2.0	7.0	45.0	18.79	1.05	884.1
				Double, Clear	E	10.0	7.0	30.0	18.79	1.38	776.8
				Double, Clear	E	2.0	5.0	9.0	18.79	1.08	183.2
				Double, Clear	W	10.0	7.0	60.0	20.73	1.20	1492.9
				Double, Clear	W	13.0	7.0	30.0	20.73	1.22	758.2
				As-Built Total:				**222.0**			**5189.1**

WALL TYPES	Area X	BWPM	= Points	Type	R-Value	Area X	WPM	= Points
Adjacent	0.0	0.00	0.0	Frame, Wood, Exterior	13.0	1261.0	3.40	4287.4
Exterior	1261.0	3.70	4665.7					
Base Total:	**1261.0**		**4665.7**	**As-Built Total:**		**1261.0**		**4287.4**

DOOR TYPES	Area X	BWPM	= Points	Type	Area X	WPM	= Points
Adjacent	21.0	11.50	241.5	Exterior Insulated	21.0	8.40	176.4
Exterior	42.0	12.30	516.6	Exterior Insulated	21.0	8.40	176.4
				Adjacent Insulated	21.0	8.00	168.0
Base Total:	**63.0**		**758.1**	**As-Built Total:**	**63.0**		**520.8**

CEILING TYPES	Area X	BWPM	= Points	Type	R-Value	Area X	WPM X WCM	= Points
Under Attic	1615.0	2.05	3310.8	Under Attic	30.0	1615.0	2.05 X 1.00	3310.8
Base Total:	**1615.0**		**3310.8**	**As-Built Total:**		**1615.0**		**3310.8**

FLOOR TYPES	Area X	BWPM	= Points	Type	R-Value	Area X	WPM	= Points
Slab	193.0(p)	8.9	1717.7	Slab-On-Grade Edge Insulation	0.0	193.0(p	18.80	3628.4
Raised	0.0	0.00	0.0					
Base Total:			**1717.7**	**As-Built Total:**		**193.0**		**3628.4**

INFILTRATION	Area X	BWPM	= Points	Area X	WPM	= Points
	1615.0	-0.59	-952.8	1615.0	-0.59	-952.8

FORM 600A-2001

WINTER CALCULATIONS

Residential Whole Building Performance Method A - Details

ADDRESS: **Lot: n/a, Sub: NW/4 of NW/4, Plat: SEC 7 T-5-S R-17-E, Lake City, FL 32055**

BASE				AS-BUILT							
Winter Base Points:			**13202.9**	**Winter As-Built Points:**							**15983.6**
Total Winter Points	X System Multiplier	=	Heating Points	Total Component	X Cap Ratio	X Duct Multiplier (DM x DSM x AHU)	X System Multiplier	X Credit Multiplier	=	Heating Points	
13202.9	**0.6274**		**8283.5**	15983.6 **15983.6**	1.000 **1.00**	(1.069 x 1.169 x 0.93) **1.162**	0.432 **0.432**	0.950 **0.950**		7617.3 **7617.3**	

FORM 600A-2001

WATER HEATING & CODE COMPLIANCE STATUS

Residential Whole Building Performance Method A - Details

ADDRESS: **Lot: n/a, Sub: NW/4 of NW/4, Plat: SEC 7 T-5-S R-17-E, Lake City, FL 32055**

BASE				AS-BUILT							
WATER HEATING											
Number of Bedrooms	X	Multiplier	= Total	Tank Volume	EF	Number of Bedrooms	X	Tank Ratio	X Multiplier	X Credit Multiplier	= Total
3		2746.00	8238.0	30.0	0.90	3		1.00	2684.98	1.00	8054.9
				As-Built Total:							**8054.9**

CODE COMPLIANCE STATUS

BASE				AS-BUILT			
Cooling Points +	Heating Points +	Hot Water Points =	Total Points	Cooling Points +	Heating Points +	Hot Water Points =	Total Points
8710	**8284**	**8238**	**25232**	**5393**	**7617**	**8055**	**21065**

PASS

FORM 600A-2001

Code Compliance Checklist

Residential Whole Building Performance Method A - Details

ADDRESS: **Lot: n/a, Sub: NW/4 of NW/4, Plat: SEC 7 T-5-S R-17-E, Lake City, FL 32055**

6A-21 INFILTRATION REDUCTION COMPLIANCE CHECKLIST

COMPONENTS	SECTION	REQUIREMENTS FOR EACH PRACTICE	CHECK
Exterior Windows & Doors	606.1.ABC.1.1	Maximum:.3 cfm/sq.ft. window area; .5 cfm/sq.ft. door area.	✓
Exterior & Adjacent Walls	606.1.ABC.1.2.1	Caulk, gasket, weatherstrip or seal between: windows/doors & frames, surrounding wall; foundation & wall sole or sill plate; joints between exterior wall panels at corners; utility penetrations; between wall panels & top/bottom plates; between walls and floor. EXCEPTION: Frame walls where a continuous infiltration barrier is installed that extends from, and is sealed to, the foundation to the top plate.	✓
Floors	606.1.ABC.1.2.2	Penetrations/openings >1/8" sealed unless backed by truss or joint members. EXCEPTION: Frame floors where a continuous infiltration barrier is installed that is sealed to the perimeter, penetrations and seams.	✓
Ceilings	606.1.ABC.1.2.3	Between walls & ceilings; penetrations of ceiling plane of top floor; around shafts, chases, soffits, chimneys, cabinets sealed to continuous air barrier; gaps in gyp board & top plate; attic access. EXCEPTION: Frame ceilings where a continuous infiltration barrier is installed that is sealed at the perimeter, at penetrations and seams.	✓
Recessed Lighting Fixtures	606.1.ABC.1.2.4	Type IC rated with no penetrations, sealed; or Type IC or non-IC rated, installed inside a sealed box with 1/2" clearance & 3" from insulation; or Type IC rated with < 2.0 cfm from conditioned space, tested.	✓
Multi-story Houses	606.1.ABC.1.2.5	Air barrier on perimeter of floor cavity between floors.	N/A
Additional Infiltration reqts	606.1.ABC.1.3	Exhaust fans vented to outdoors, dampers; combustion space heaters comply with NFPA, have combustion air.	✓

6A-22 OTHER PRESCRIPTIVE MEASURES (must be met or exceeded by all residences.)

COMPONENTS	SECTION	REQUIREMENTS	CHECK
Water Heaters	612.1	Comply with efficiency requirements in Table 6-12. Switch or clearly marked circuit breaker (electric) or cutoff (gas) must be provided. External or built-in heat trap required.	✓
Swimming Pools & Spas	612.1	Spas & heated pools must have covers (except solar heated). Non-commercial pools must have a pump timer. Gas spa & pool heaters must have a minimum thermal efficiency of 78%.	N/A
Shower heads	612.1	Water flow must be restricted to no more than 2.5 gallons per minute at 80 PSIG.	✓
Air Distribution Systems	610.1	All ducts, fittings, mechanical equipment and plenum chambers shall be mechanically attached, sealed, insulated, and installed in accordance with the criteria of Section 610. Ducts in unconditioned attics: R-6 min. insulation.	✓
HVAC Controls	607.1	Separate readily accessible manual or automatic thermostat for each system.	✓
Insulation	604.1, 602.1	Ceilings-Min. R-19. Common walls-Frame R-11 or CBS R-3 both sides. Common ceiling & floors R-11.	✓

From: The Columbia County Building Department
Plans Review
135 NE Hernando Av.
P. O Box 1529
Lake City Florida, 32056-1529

Reference to: Build permit application Number: 0510-79

Mack Robinson Owner Roger Little Jr. 401 SW Little Rd.

On the date of November 1, 2005 application 0510-79 and plans for construction of a single family dwelling were reviewed and the following information or alteration to the plans will be required to continue processing this application. If you should have any question please contact the above address, or contact phone number (386) 758-1163 or fax any information to (386) 754-7088.

Please include application number 0510-79 when making reference to this application.

1. Application 0510-79 which was filed with the building department on the date of October 27, 2005 will be reviewed under the Florida Building Code 2004. The Wind Load design by Mr. Mark Disosway was design under the Florida Building Code 2001. The wind Load design should reflect the code sections of the Florida Building Code 2004 that relate to wind Load design code requirements.

2. Please show compliance with sections R308.4 of the FRC-2004 for the window in bath number 2 hazardous locations: Glazing in doors and enclosures for hot tubs, whirlpools, saunas, steam rooms, bathtubs and showers. Glazing in any part of a building wall enclosing these compartments where the bottom exposed edge of the glazing is less than 60 inches (1524 mm) measured vertically above any standing or walking surface.

3. If the elevation of the covered porches finished floor will be 30" above the finished grade please show compliance with sections R312.1 of the FRC-2004 Guards required:. Porches, balconies or raised floor surfaces located more than 30 inches (762 mm) above the floor or grade below shall have guards not less than 36 inches (914 mm) in height. Open sides of stairs with a total rise of more than 30 inches (762 mm) above the floor or grade below shall have guards not less than 34 inches (864 mm) in height measured vertically from the nosing of the treads.

R312.2 Guard opening limitations.

Required guards on open sides of stairways, raised floor areas, balconies and porches shall have intermediate rails or ornamental closures which do not allow passage of a sphere 4 inches (102mm) or more in diameter.

Exceptions: The triangular openings formed by the riser, tread and bottom rail of a guard at the open side of a stairway are permitted to be of such a size that a sphere 6 inches (152 mm) cannot pass through.

1607.7.1.1 Concentrated load.

Handrail assemblies and guards shall be able to resist a single concentrated load of 200 pounds (0.89 kN), applied in any direction at any point along the top, and have attachment devices and supporting structure to transfer this loading to appropriate structural elements of the building. Please show on the plans a design detail drawing of both interior and exterior guards to comply with the above code requirement.

4. Please show compliance with sections R309 of the FRC-2004 R309.1 Opening protection. Openings from a private garage directly into a room used for sleeping purposes shall not be permitted. Other openings between the garage and residence shall be equipped with solid wood doors not less than 13/8 inches (35 mm) in thickness, solid

or honeycomb core steel doors not less than 13/8 inches (35 mm) thick, or 20-minute fire-rated doors. R309.1.1 Duct penetration: Ducts in the garage and ducts penetrating the walls or ceilings separating the dwelling from the garage shall be constructed of a minimum No. 26 gage (0.48 mm) sheet steel or other approved material and shall have no openings into the garage. R309.2 Separation required: The garage shall be separated from the residence and its attic area by not less than ½-inch (12.7 mm) gypsum board applied to the garage side. Garages beneath habitable rooms shall be separated from all habitable rooms above by not less than 5/8-inch (15.9 mm) Type X gypsum board or equivalent. Where the separation is a floor-ceiling assembly, the structure supporting the separation shall also be protected by not less than ½-inch (12.7 mm) gypsum board or equivalent.

Thank you,

Joe Haltiwanger
Plan Examiner
Columbia County Building Department

CERTIFICATE OF

OCCUPANCY

COLUMBIA COUNTY, FLORIDA

Department of Building and Zoning Inspection

This Certificate of Occupancy is issued to the below named permit holder for the building and premises at the below named location, and certifies that the work has been completed in accordance with the Columbia County Building Code.

Parcel Number 07-5S-17-09151-007 **Building permit No.** 000023811

Use Classification SFD,UTILITY **Fire:** 35.52

Permit Holder MACK ROBINSON **Waste:** 73.50

Owner of Building ROGER LITTLE, JR **Total:** 109.02

Location: 401 SW LITTLE ROAD, LAKE CITY, FL

Date: 04/10/2006

Harry Dicks HD

Building Inspector

POST IN A CONSPICUOUS PLACE
(Business Places Only)

23811

McKinzey
399 SW CR 138
Ft. White

Notice of Preventative Treatments for Termites
(as required by Florida Building Code (FBC) 104.2.6)

EDWARDS PEST CONTROL, 386 454 3051
241 SE HARDIN COURT, HIGH SPRINGS, FL, 32643

Address of Treatment or Lot/Block of Treatment

6/30/05	4:00 pm	Jim Railey
Date	Time	Applicator
PREMISE	Imidoprid	50 gals
Product Used	Chemical used (active ingredient)	Number of gallons applied
.05	450 sq ft	
Percent Concentration	Area treated (square feet)	Linear feet treated

Stage of treatment (Horizontal, Vertical, Adjoining Slab, retreat of disturbed area)

As per 104.2.6 – If soil chemical barrier method for termite prevention is used, final exterior treament shall be completed prior to final building approval.

If this notice is for the final exterior treatment, initial and date this line 11/14/06

Notice Of Inspection and/or Treatment

11/14/06
Date of Inspection

11/14/06
Date of Treatment

PREMISE
Pesticide Used

SUB. TER.
FINAL TREATMENT ADDITION
Wood Destroying Organism Treated

Pursuant to Chapter 482. Florida Statutes 482.226(6), this notice is required to be posted. Any licensee who performs control of any wood destroying organism shall post notice of said treatment immediately adjacent to the access to the attic or crawl area or other readily accessible area of the property treated.

Edwards Pest Control
241 SE Hardin Court
High Springs, FL 32643
(386) 454-3051

RESIDENTIAL MINIMUM PLAN REQUIREMENTS AND CHECKLIST FOR FLORIDA BUILDING CODE 2004 and FLORIDA RESIDENTIAL CODE 2004 WITH AMENDMENTS ONE (1) AND TWO (2) FAMILY DWELLINGS

ALL REQUIREMENTS ARE SUBJECT TO CHANGE
EFFECTIVE OCTOBER 1, 2005

ALL BUILDING PLANS MUST INDICATE THE FOLLOWING ITEMS AND INDICATE COMPLIANCE WITH CHAPTER 16 OF THE FLORIDA BUILDING CODE 2004 BY PROVIDING CALCULATIONS AND DETAILS THAT HAVE THE SEAL AND SIGNATURE OF A CERTIFIED ARCHITECT OR ENGINEER REGISTERED IN THE STATE OF FLORIDA, OR ALTERNATE METHODOLOGIES, APPROVED BY THE STATE OF FLORIDA BUILDING COMMISSION FOR ONE-AND-TWO FAMILY DWELLINGS. FOR DESIGN PURPOSES THE FOLLOWING BASIC WIND SPEED AS PER FIGURE 1609 SHALL BE USED.

WIND SPEED LINE SHALL BE DEFINED AS FOLLOWS: THE CENTERLINE OF INTERSTATE 75.

1. ALL BUILDINGS CONSTRUCTED EAST OF SAID LINE SHALL BE -------- 100 MPH
2. ALL BUILDINGS CONSTRUCTED WEST OF SAID LINE SHALL BE --------110 MPH
3. NO AREA IN COLUMBIA COUNTY IS IN A WIND BORNE DEBRIS REGION

APPLICANT – PLEASE CHECK ALL APPLICABLE BOXES BEFORE SUBMITTAL

GENERAL REQUIREMENTS; Two (2) complete sets of plans containing the following:

Applicant	Plans Examiner	
☑	☐	All drawings must be clear, concise and drawn to scale ("Optional " details that are not used shall be marked void or crossed off). Square footage of different areas shall be shown on plans.
☑	☑	Designers name and signature on document (FBC 106.1). If licensed architect or engineer, official seal shall be affixed.
☑	☐	**Site Plan including:**
	See	a) Dimensions of lot
		b) Dimensions of building set backs
		c) Location of all other buildings on lot, well and septic tank if applicable, and all utility easements.
		d) Provide a full legal description of property.
☑	☐ See NOTE 1	**Wind-load Engineering Summary, calculations and any details required** Plans or specifications must state compliance with FBC Section 1609. The following information must be shown as per section 1603.1.4 FBC
		a. Basic wind speed (3-second gust), miles per hour (km/hr).
		b. Wind importance factor, Iw, and building classification from Table 1604.5 or Table 6-1, ASCE 7 and building classification in Table 1-1, ASCE 7.
		c. Wind exposure, if more than one wind exposure is utilized, the wind exposure and applicable wind direction shall be indicated.
		d. The applicable enclosure classifications and, if designed with ASCE 7, internal pressure coefficient.
		e. Components and Cladding. The design wind pressures in terms of psf (kN/m²) to be used for the design of exterior component and cladding materials not specifally designed by the registered design professional.
		Elevations including:
☑	☑	a) All sides
☑	☑	b) Roof pitch
☑	☑	c) Overhang dimensions and detail with attic ventilation

d) Location, size and height above roof of chimneys.
e) Location and size of skylights
f) Building height
e) Number of stories

Floor Plan including:

a) Rooms labeled and dimensioned.
b) Shear walls identified.
c) Show product approval specification as required by Fla. Statute 553.842 and Fla. Administrative Code 9B-72 **(see attach forms).**
d) Show safety glazing of glass, where required by code. See NOTE 2
e) Identify egress windows in bedrooms, and size.
f) Fireplace (gas vented), (gas non-vented) or wood burning with hearth, **(Please circle applicable type).** PRE FAB METAL FLUE
g) Stairs with dimensions (width, tread and riser) and details of guardrails and handrails. See NOTE 3
h) Must show and identify accessibility requirements (accessible bathroom)

Foundation Plan including:

a) Location of all load-bearing wall with required footings indicated as standard or monolithic and dimensions and reinforcing.
b) All posts and/or column footing including size and reinforcing
c) Any special support required by soil analysis such as piling
d) Location of any vertical steel.

Roof System:

a) Truss package including:
   1. Truss layout and truss details signed and sealed by Fl. Pro. Eng.
   2. Roof assembly (FBC 106.1.1.2)Roofing system, materials, manufacturer, fastening requirements and product evaluation with wind resistance rating)

b) Conventional Framing Layout including:
   1. Rafter size, species and spacing
   2. Attachment to wall and uplift
   3. Ridge beam sized and valley framing and support details
   4. Roof assembly (FBC 106.1.1.2)Roofing systems, materials, manufacturer, fastening requirements and product evaluation with wind resistance rating)

Wall Sections including:

a) Masonry wall
   1. All materials making up wall
   2. Block size and mortar type with size and spacing of reinforcement
   3. Lintel, tie-beam sizes and reinforcement
   4. Gable ends with rake beams showing reinforcement or gable truss and wall bracing details
   5. All required connectors with uplift rating and required number and size of fasteners for continuous tie from roof to foundation
   6. Roof assembly shown here or on roof system detail (FBC 106.1.1.2) Roofing system, materials, manufacturer, fastening requirements and product evaluation with resistance rating)
   7. Fire resistant construction (if required)
   8. Fireproofing requirements
   9. Shoe type of termite treatment (termiticide or alternative method)
   10. Slab on grade
      a. Vapor retarder (6mil. Polyethylene with joints lapped 6 inches and sealed)
      b. Must show control joints, synthetic fiber reinforcement or Welded fire fabric reinforcement and supports
   11. Indicate where pressure treated wood will be placed
   12. Provide insulation R value for the following:
      a. Attic space
      b. Exterior wall cavity

c. Crawl space (if applicable)

☐ ☐ b) Wood frame wall

1. All materials making up wall
2. Size and species of studs
3. Sheathing size, type and nailing schedule
4. Headers sized
5. Gable end showing balloon framing detail or gable truss and wall hinge bracing detail
6. All required fasteners for continuous tie from roof to foundation (truss anchors, straps, anchor bolts and washers)
7. Roof assembly shown here or on roof system detail (FBC 106.1.1.2) Roofing system, materials, manufacturer, fastening requirements and product evaluation with wind resistance rating)
8. Fire resistant construction (if applicable)
9. Fireproofing requirements
10. Show type of termite treatment (termiticide or alternative method)
11. Slab on grade
    a. Vapor retarder (6Mil. Polyethylene with joints lapped 6 inches and sealed
    b. Must show control joints, synthetic fiber reinforcement or welded wire fabric reinforcement and supports
12. Indicate where pressure treated wood will be placed
13. Provide insulation R value for the following:
    a. Attic space
    b. Exterior wall cavity
    c. Crawl space (if applicable)

☐ ☐ c) Metal frame wall and roof (designed, signed and sealed by Florida Prof. Engineer or Architect)

Floor Framing System:

☐ ☐ a) Floor truss package including layout and details, signed and sealed by Florida Registered Professional Engineer

☐ ☐ b) Floor joist size and spacing

☐ ☐ c) Girder size and spacing

☐ ☐ d) Attachment of joist to girder

☐ ☐ e) Wind load requirements where applicable

☐ ☐ **Plumbing Fixture layout**

Electrical layout including:

☐ ☐ a) Switches, outlets/receptacles, lighting and all required GFCI outlets identified

☐ ☐ b) Ceiling fans

☐ ☐ c) Smoke detectors

☐ ☐ d) Service panel and sub-panel size and location(s)

☐ ☐ e) Meter location with type of service entrance (overhead or underground)

☐ ☐ f) Appliances and HVAC equipment

☐ ☐ g) Arc Fault Circuits (AFCI) in bedrooms

☐ ☐ h) Exhaust fans in bathroom

HVAC information

☐ ☐ a) Energy Calculations (dimensions shall match plans)

☐ ☐ b) Manual J sizing equipment or equivalent computation

☐ ☐ c)Gas System Type (LP or Natural) Location and BTU demand of equipment

☐ ☐ **Disclosure Statement for Owner Builders**

☐ ☐ ***Notice Of Commencement Required Before Any Inspections Will Be Done

☐ ☐ **Private Potable Water**

a) Size of pump motor

b) Size of pressure tank

c) Cycle stop valve if used

THE FOLLOWING ITEMS MUST BE SUBMITTED WITH BUILDING PLANS

1. **Building Permit Application:** A current Building Permit Application form is to be completed and submitted for all residential projects.

2. **Parcel Number:** The parcel number (Tax ID number) from the Property Appraiser (386) 758-1084 is required. A copy of property deed is also requested.

3. **Environmental Health Permit or Sewer Tap Approval:** A copy of the Environmental Health permit, existing septic approval or sewer tap approval is required before a building permit can be issued. (386) 758-1058 **(Toilet facilities shall be provided for construction workers)**

4. **City Approval: If the project is to be located within the city limits of the Town of Fort White**, prior approval is required. The Town of Fort White approval letter is required to be submitted by the owner or contractor to this office when applying for a Building Permit. **(386) 497-2321**

5. **Flood Information:** All projects within the Floodway of the Suwannee or Santa Fe Rivers shall require permitting through the Suwannee River Water Management District, before submitting application to this office. Any project located within a flood zone where the base flood elevation (100 year flood) has been established shall meet the requirements of Section 8.8 of the Columbia County Land Development Regulations. Any project located within a flood zone where the base flood elevation has not been established (Zone A) shall meet the requirements of Section 8.7 of the Columbia County Land Development Regulations. **CERTIFIED FINISHED FLOOR ELEVATIONS WILL BE REQUIRED ON ANY PROJECT WHERE THE BASE FLOOD ELEVATION (100 YEAR FLOOD) HAS BEEN ESTABLISHED.**
A development permit will also be required. Development permit cost is **$50.00**

6. **Driveway Connection: If the property does not have an existing access to a public road, then an** application for a culvert permit **($25.00)** must be made. If the applicant feels that a culvert is not needed, they may apply for a culvert waiver **($50.00)**. All culvert waivers are sent to the Columbia County Public Works Department for approval or denial. **If the project is to be located on a F.D.O.T. maintained road, than an F.D.O.T. access permit is required.**

7. **911 Address:** If the project is located in an area where the 911 address has been issued, then the proper paperwork from the 911 Addressing Department must be submitted. (386) 752-8787

ALL REQUIRED INFORMATION IS TO BE SUBMITTED FOR REVIEW. YOU WILL BE NOTIFIED WHEN YOUR APPLICATION AND PLANS ARE APPROVED AND READY TO PERMIT. PLEASE DO NOT EXPECT OR REQUEST THAT PERMIT APPLICATIONS BE REVIEWED OR APPROVED WHILE YOU ARE HERE – TIME WILL NOT ALLOW THIS –PLEASE DO NOT ASK

PRODUCT APPROVAL SPECIFICATION SHEET

Location:_____ **Project Name:**_____

As required by Florida Statute 553.842 and Florida Administrative Code 9B-72, please provide the information and the product approval number(s) on the building components listed below if they will be utilized on the construction project for which you are **applying for a building permit on or after April 1, 2004**. We recommend you contact your local product supplier should you not know the product approval number for any of the applicable listed products. More information about statewide product approval can be obtained at www.floridabuilding.org

Category/Subcategory	Manufacturer	Product Description	Approval Number(s)
A. EXTERIOR DOORS			
1. Swinging	Masonite	Steel	FL 18
2. Sliding			
3. Sectional			
4. Roll up			
5. Automatic			
6. Other			
B. WINDOWS	capital		FL 675
1. Single hung			
2. Horizontal Slider			
3. Casement			
4. Double Hung			
5. Fixed			
6. Awning			
7. Pass -through			
8. Projected			
9. Mullion			
10. Wind Breaker			
11 Dual Action			
12. Other			
C. PANEL WALL			
1. Siding	James Hardy		FL 889
2. Soffits			
3. EIFS			
4. Storefronts			
5. Curtain walls			
6. Wall louver			
7. Glass block			
8. Membrane			
9. Greenhouse			
10. Other			
D. ROOFING PRODUCTS			
1. Asphalt Shingles			
2. Underlayments			
3. Roofing Fasteners			
4. Non-structural Metal Rf			
5. Built-Up Roofing			
6. Modified Bitumen			
7. Single Ply Roofing Sys			
8. Roofing Tiles			
9. Roofing Insulation			
10. Waterproofing			
11. Wood shingles /shakes			
12. Roofing Slate			

Category/Subcategory (cont.)	Manufacturer	Product Description	Approval Number(s)
13. Liquid Applied Roof Sys			
14. Cements-Adhesives – Coatings			
15. Roof Tile Adhesive			
16. Spray Applied Polyurethane Roof			
17. Other			
E. SHUTTERS			
1. Accordion			
2. Bahama			
3. Storm Panels			
4. Colonial			
5. Roll-up			
6. Equipment			
7. Others			
F. SKYLIGHTS			
1. Skylight			
2. Other			
G. STRUCTURAL COMPONENTS			
1. Wood connector/anchor	Simpson	H1 SH4	FL 123 123
2. Truss plates			
3. Engineered lumber			
4. Railing			
5. Coolers-freezers			
6. Concrete Admixtures			
7. Material			
8. Insulation Forms			
9. Plastics			
10. Deck-Roof			
11. Wall			
12. Sheds			
13. Other			
H. NEW EXTERIOR ENVELOPE PRODUCTS			
1.			
2.			

The products listed below did not demonstrate product approval at plan review. I understand that at the time of inspection of these products, the following information must be available to the inspector on the jobsite; 1) copy of the product approval, 2) the performance characteristics which the product was tested and certified to comply with, 3) copy of the applicable manufacturers installation requirements.

I understand these products may have to be removed if approval cannot be demonstrated during inspection

Contractor or Contractor's Authorized Agent Signature

Print Name

Date

Location

Permit # **(FOR STAFF USE ONLY)**

NOTICE:

ADDRESSES BY APPOINTMENT ONLY!

TO OBTAIN A 9-1-1 ADDRESS THE REQUESTER MUST CONTACT THE COLUMBIA COUNTY 9-1-1 ADDRESSING DEPARTMENT AT (386) 752-8787 FOR AN APPOINTMENT TIME AND DATE:

YOU CAN NOT OBTAIN A NEW ADDRESS OVER THE TELEPHONE. MUST MAKE AN APPOINTMENT!

THE ADDRESSING DEPARTMENT IS LOCATED AT 263 NW LAKE CITY AVENUE (OFF OF WEST U.S. HIGHWAY 90 WEST OF INTERSTATE 75 AT THE COLUMBIA COUNTY EMERGENCY OPERATIONS CENTER).

THE REQUESTER WILL NEED THE FOLLOWING:

1. THE PARCEL OR TAX ID NUMBER (SAMPLE: "25-4S-17-12345-123" OR "R12345-123) FOR THE PROPERTY.
2. A PLAT, PLAN, SITE PLAN, OR DRAWING SHOWING THE PROPERTY LINES OF THE PARCEL.
   a. LOCATION OF PLANNED RESIDENT OR BUSINESS STRUCTURE ON THE PROPERTY WITH DISTANCES FROM TWO OF THE PROPERTY LINES TO THE STRUCTURE (SEE SAMPLE BELOW).
   b. LOCATION OF THE ACCESS POINT (DRIVEWAY, ETC.) ON THE ROADWAY FROM WHICH LOCATION IS TO BE ADDRESSED WITH A DISTANCE FROM A PARALLEL PROPERTY LINE AND OR PROPERTY CORNER (SEE SAMPLE BELOW).
   c. TRAVEL OF THE DRIVEWAY FROM THE ACCESS POINT TO THE STRUCTURE (SEE SAMPLE BELOW).

SAMPLE:

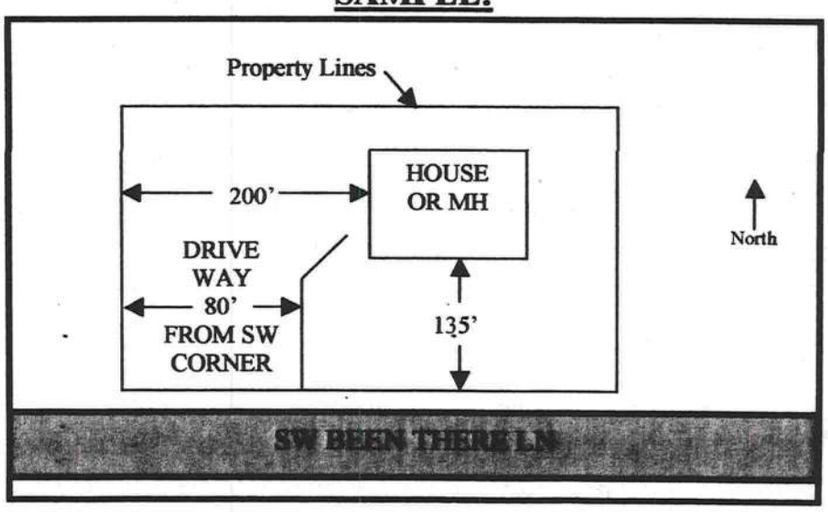

NOTE: 5 TO 7 WORKING DAYS MAY BE REQUIRED IF ADDRESSING DEPARTMENT NEEDS TO CONDUCT AN ON SITE SURVEY.

ELK

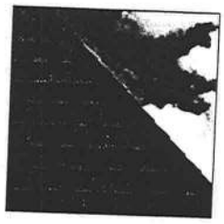

PRESTIQUE®
HIGH DEFINITION®

RAISED PROFILE™

Prestique Plus *High Definition* and Prestique Gallery Collection™

Product size	13¼"x 39 ¾"
Exposure	5⅝"
Pieces/Bundle	16
Bundles/Square	4/98.5 sq.ft.
Squares/Pallet	11

50-year limited warranty period: non-prorated coverage for shingles and application labor for the initial 5 years, plus an option for transferability*; prorated coverage for application labor and shingles for balance of limited warranty period; 5-year limited wind warranty*.

Raised Profile

Product size	13¼"x 38¾"
Exposure	5⅝"
Pieces/Bundle	22
Bundles/Square	3/100 sq.ft.
Squares/Pallet	16

30-year limited warranty period: non-prorated coverage for shingles and application labor for the initial 5 years, plus an option for transferability*; prorated coverage for application labor and shingles for balance of limited warranty period; 5-year limited wind warranty*.

Prestique I *High Definition*

Product size	13¼"x 39¾"
Exposure	5⅝"
Pieces/Bundle	16
Bundles/Square	4/98.5 sq.ft.
Squares/Pallet	14

40-year limited warranty period: non-prorated coverage for shingles and application labor for the initial 5 years, plus an option for transferability*; prorated coverage for application labor and shingles for balance of limited warranty period; 5-year limited wind warranty*.

Prestique *High Definition*

Product size	13¼"x 38¾"
Exposure	5⅝"
Pieces/Bundle	22
Bundles/Square	3/100 sq.ft.
Squares/Pallet	16

30-year limited warranty period: non-prorated coverage for shingles and application labor for the initial 5 years, plus an option for transferability*; prorated coverage for application labor and shingles for balance of limited warranty period; 5-year limited wind warranty*.

HIP AND RIDGE SHINGLES

Seal-A-Ridge® w/*FLX*™

Size: 12"x 12"
Exposure: 6½"
Pieces/Bundle: 45
Coverage: 4 Bundles = 100 linear feet

Elk Starter Strip

52 Bundles/Pallet
18 Pallets/Truck
936 Bundles/Truck
19 Pieces/Bundle
1 Bundle = 120.33 linear feet

Available Colors: Antique Slate, Weatheredwood, Shakewood, Sablewood, Hickory, Barkwood**, Forest Green, Wedgewood**, Birchwood**, Sandalwood. Gallery Collection: Balsam Forest™, Weathered Sage™, Sienna Sunset™.

All Prestique, Raised Profile and Seal-A-Ridge roofing products contain Elk WindGuard® sealant. WindGuard activates with the sun's heat, bonding shingles into a wind and weather resistant cover that resists blow-offs and leaks.

Check for availability with built-in StainGuard® treatment to inhibit the discoloration of roofing granules caused by the growth of certain types of algae. Not available in Sablewood.

All Prestique and Raised Profile shingles meet UL® Wind Resistant (UL 997) and Class "A" Fire Ratings (UL 790); and ASTM Specifications D 3018, Type-I; D 3161, Type-I; E 108 and the requirements of ASTM D 3462.

All Prestique and Raised Profile shingles meet the latest Metro Dade building code requirements.

***See actual limited warranty for conditions and limitations.**
****Check for product availability.**

SPECIFICATIONS

SCOPE: Work includes furnishing all labor, materials and equipment necessary to complete installation of (name) shingles specified herein. Color shall be (name of color). Hip and ridge type to be Elk Seal-A-Ridge with formula *FLX*.

All exposed metal surfaces (flashing, vents, etc.) to be painted with matching Elk roof accessory paint.

PREPARATION OF ROOF DECK: Roof deck to be dry, well-seasoned 1" x 6" (25.4mm x 152.4mm) boards; exterior-grade plywood (exposure 1 rated sheathing) at least 3/8" (9.525mm) thick conforming to the specifications of the American Plywood Association; 7/16" (11.074mm) oriented strandboard; or chipboard. Most fire retardant plywood decks are NOT approved substrates for Elk shingles. Consult Elk Field Service for application specifications over other decks and other slopes.

MATERIALS: Underlayment for standard roof slopes, 4" per foot (101.6/304.8mm) or greater: apply non-perforated No. 15 or 30 asphalt-saturated felt underlayment. For low slopes [4" per foot (101.6/304.8mm) to a minimum of 2" per foot (50.8/304.8mm)], use two plies of underlayment overlapped a minimum of 19". Fasteners shall be of sufficient length and holding power for securing material as required by the application instructions printed on shingle wrapper.

For areas where algae is a problem, shingles shall be (name) with StainGuard treatment, as manufactured by the Elk Tuscaloosa plant. Hip and ridge type to be Seal-A-Ridge with formula *FLX* with StainGuard treatment.

Complete application instructions are published by Elk and printed on the back of every shingle bundle. All warranties are contingent upon the correct installation as shown on the instructions. These instructions are the minimum required to meet Elk application requirements. In some areas, building codes may require additional application techniques or methods beyond our instructions. In these cases, the local code must be followed. Under no circumstances will Elk accept application requirements less than those contained in its application instructions.

For specifications in CSI format, call 800.354.SPEC (7732) or e-mail specinfo@elkcorp.com.

SOUTHEAST & ATLANTIC OFFICE:
800.945.5551

CORPORATE HEADQUARTERS:
800.354.7732

PLANT LOCATION:
800.945.5545

ELK
www.elkcorp.com

SSOOT 01 02

TUSCALOOSA, AL

DIRECTIONS FOR APPLICATION

Please read carefully. Failure to follow these instructions may void the product warranty. See specific application instructions for Prestique® Plus and Prestique Gallery Collection™ 110 MPH, and Prestique I 90 MPH limited wind warranty requirements.

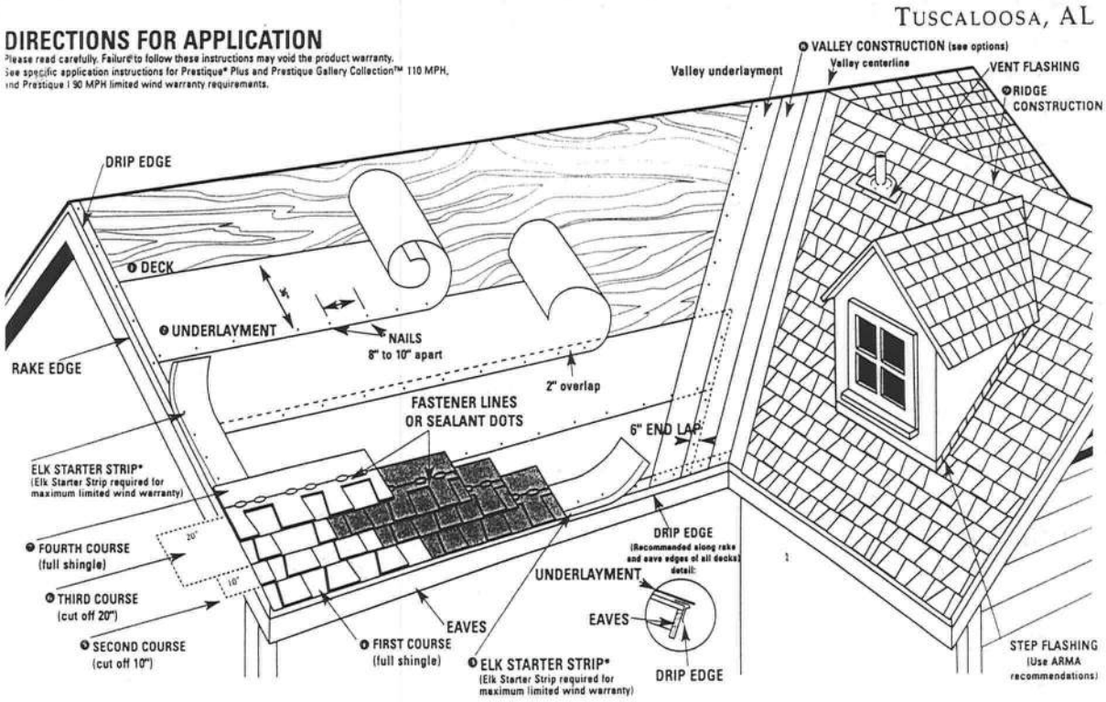

VALLEY CONSTRUCTION OPTION (California Open and California Closed are also acceptable) NOTE: For complete ARMA valley installation details, see ARMA Residential Asphalt Roofing Manual.

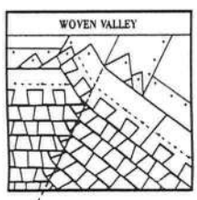

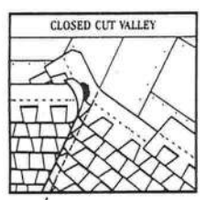

DIRECTIONS FOR APPLICATION

These application instructions are the minimum required to meet Elk's application requirements. Your failure to follow these instructions may void the product warranty. In some areas, the building codes may require additional application techniques or methods beyond our instructions. In these cases, the local code must be followed. Under no circumstances will Elk accept application requirements that are less than those printed here. Shingles should not be jammed tightly together. All attics should be properly ventilated. Note: It is not necessary to remove tape on back of shingle.

❶ DECK PREPARATION

Roof decks should be dry, well-seasoned 1" x 6" boards or exterior grade plywood minimum 3/8" thick and conform to the specifications of the American Plywood Association or 7/16" oriented strandboard, or 7/16" chipboard.

❷ UNDERLAYMENT

Apply underlayment (Non-Perforated No. 15 or 30 asphalt saturated felt). Cover drip edge at eaves only.

For low slope (2/12 up to 4/12), completely cover the deck with two plies of underlayment overlapping a minimum of 19". Begin by fastening a 19" wide strip of underlayment placed along the eaves. Place a full 36" wide sheet over the starter, horizontally placed along the eaves and completely overlapping the starter strip.

EAVE FLASHING FOR ICE DAMS (ASK A ROOFING CONTRACTOR, REFER TO ARMA MANUAL OR CHECK LOCAL CODES)

For standard slope (4/12 to less than 21/12), use coated roll roofing if no less than 50 pounds over the felt underlayment extending from the eave edge to a point at least 24" beyond the inside wall of the living space below or one layer of a self-adhered eave and flashing membrane.

For low slope (2/12 up to 4/12), use a continuous layer of asphalt plastic cement between the two plies of underlayment from the eave edge up roof to a point at least 24" beyond the inside wall of the living space below or one layer of a self-adhered eave and flashing membrane.

Consult the Elk Field Service Department for application specifications over other decks and other slopes.

❸ STARTER SHINGLE COURSE

USE AN ELK STARTER STRIP OR A STRIP SHINGLE INVERTED WITH THE HEADLAP APPLIED AT THE EAVE EDGE. With at least 4" trimmed from the end of the first shingle, start at the rake edge overhanging the eave 1/2" to 3/4". Fasten 2" from the lower edge and 1" from each side.

❹ FIRST COURSE

Start at rake and continue course with full shingles laid flush with the starter course. Shingles may be applied with a course alignment of 45° on the roof.

❺ SECOND COURSE

Start at the rake with the shingle having 10" trimmed off and continue across roof with full shingles.

❻ THIRD COURSE

❼ FOURTH COURSE

Start at the rake and continue with full shingles across roof.

FIFTH AND SUCCEEDING COURSES.

Repeat application as shown for second, third, and fourth courses. Do not rack shingles straight up the roof.

❽ VALLEY CONSTRUCTION

Open, woven and closed cut valleys are acceptable when applied by Asphalt Roofing Manufacturing Association (ARMA) recommended procedures. For metal valleys, use 36" wide vertical underlayment prior to applying 18" metal flashing (secure edge with nails). No nails are to be within 6" of valley center.

❾ RIDGE CONSTRUCTION

For ridge construction use Class "A" Seal-A-Ridge® with formula *FLX™* (See ridge package for installation instructions.)

FASTENERS

While nailing is the preferred method for Elk shingles, Elk will accept fastening methods according to the following instructions.

Always nail or staple through the fastener line or on products without fastener lines, nail or staple between and in line with sealant dots.

NAILS: Corrosive resistant, 3/8" head, minimum 12-gauge roofing nails. Elk recommends 1-1/4" for new roofs and 1-1/2" for roof-overs. In cases where you are applying shingles to a roof that has an exposed overhang, for new roofs only, 3/4" ring shank nails are allowed to be used from the eave's edge to a point up the roof that is past the outside wall line. 1" ring shank nails allowed for re-roof.

STAPLES: Corrosive resistant, 16-gauge minimum, crown width minimum of 15/16". Note: An improperly adjusted staple gun can result in raised staples that can cause a fish-mouthed appearance and can prevent sealing.

Fasteners should be long enough to obtain 3/4" deck penetration or penetration through deck, whichever is less.

MANSARD APPLICATIONS

Correct fastening is critical to the performance of the roof. For slopes exceeding 60° (or 21/12) use six fasteners per shingle. Locate fasteners in the fastener area 1" from each side edge with the remaining four fasteners equally spaced along the length of the double thickness (laminated) area. Only fastening methods according to the above instructions are acceptable.

LIMITED WIND WARRANTY

- For a Limited Wind Warranty, all Prestique and Raised Profile™ shingles must be applied with 4 properly placed fasteners, or in the case of mansard applications, 6 properly placed fasteners per shingle.
- For a Limited Wind Warranty up to 110 MPH for Prestique Gallery Collection or Prestique Plus or 90 MPH for Prestique I, shingles must be applied with 6 properly placed NAILS per shingle. SHINGLES APPLIED WITH STAPLES WILL NOT QUALIFY FOR THIS ENHANCED LIMITED WIND WARRANTY. Also, Elk Starter Strip shingles must be applied at the eaves and rake edges to qualify Prestique Plus, Prestique Gallery Collection and Prestique I shingles for this enhanced Limited Wind Warranty. Under no circumstances should the Elk

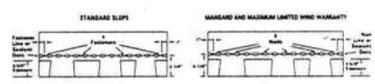

HELP STOP BLOW-OFFS AND CALL-BACKS

A minimum of four fasteners must be driven into the DOUBLE THICKNESS (laminated) area of the shingle. Nails or staples must be placed along – and through – the "fastener line" or on products without fastener lines, nail or staple between and in line with sealant dots. CAUTION: Do not use fastener line for shingle alignment.

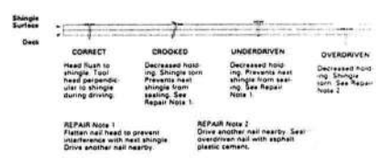

Refer to local codes which in some areas may require specific application techniques beyond those Elk has specified.
All Prestique and Raised Profile shingles have a U.L.® Wind Resistance Rating when applied in accordance with these instructions using nails or staples on re-roofs as well as new construction.

CAUTION TO WHOLESALER: Careless and improper storage or handling can harm fiberglass shingles. Keep these shingles completely covered, dry, reasonably cool, and protected from the weather. Do not store near various sources of heat. Do not store in direct sunlight until applied. DO NOT DOUBLE STACK. Systematically rotate all stock so that the material that has been stored the longest will be the first to be moved out.

ELK

www.elkcorp.com

STRUCTURAL TEST REPORT SUMMARY

Rendered to:

MI HOME PRODUCTS, INC.

SERIES/MODEL: 650
TYPE: Twin Aluminum Single Hung Window

Title of Test	Results
Overall Design Pressure	35.0 psf
Operating Force	18 lb max.
Air Infiltration	0.29 cfm/ft^2
Water Resistance	5.25 psf
Structural Test Pressure	70.5 psf

Reference should be made to Report No. 01-36060.02 for complete test specimen description and data.

For ARCHITECTURAL TESTING, INC.

Scott D. Kramer, Technician

SDK:nlb/baw

ALLEN M. RUCKER
LICENSED
NO. 18574
STATE OF FLORIDA
PROFESSIONAL ENGINEER

Allen M. Rucker
28 MARCH 2002

Architectural Testing

STRUCTURAL TEST REPORT

Rendered to:

MI HOME PRODUCTS, INC.
650 West Market Street
P.O. Box 370
Gratz, Pennsylvania 17030-0370

Report No: 01-36060.02
Test Date: 11/04/99
Report Date: 03/26/02
Expiration Date: 11/04/03

Project Summary: Architectural Testing, Inc. (ATI) was contracted to perform tests on a Series/Model 650, twin aluminum single hung window at MI Home Products' test facility in Elizabethville, Pennsylvania. Test specimen description and results are reported herein.

Test Specification The test specimen was evaluated in accordance with the following:

ASTM E 283-91, *Standard Test Method for Determining the Rate of Air Leakage Through Exterior Windows, Curtain Walls, and Doors Under Specified Pressure Differences Across the Specimen*

ASTM E 330-97, *Standard Test Method for Structural Performance of Exterior Windows, Curtain Walls, and Doors by Uniform Static Air Pressure Difference*

ASTM E 547-96, *Standard Test Method for Water Penetration of Exterior Windows, Curtain Walls, and Doors by Cyclic Static Air Pressure Differential*

Test Specimen Description:

Series/Model: 650

Type: Twin Aluminum Single Hung Window

Overall Size: 5' 10-1/4" wide by 5' 0" high

Active Size (2): 2' 8-3/4" wide by 2' 6-1/4" high

Fixed Daylight Opening Size (2): 2' 6- 1/4" wide by 2' 3" high

Screen Size (2): 2' 7-3/4" wide by 2' 4-1/4" high

ALLEN H. REEVES
CERTIFICATE
NO. 19354
STATE OF
FLORIDA
PROFESSIONAL ENGINEER

Allen H. Reeves
28 MARCH 2002

130 Derry Court
York, PA 17402-9405
phone: 717.764.7700
fax: 717.764.4129
www.archtest.com

Test Specimen Description: (Continued)

Finish: All aluminum was painted white.

Glazing Details: Both the active sash and fixed lites utilized 5/8" thick insulating glass fabricated from two sheets of 3/32" thick clear annealed glass and a desiccant filled metal spacer system. The active sash were channel glazed with a flexible wedge gasket. The fixed lites were interior glazed, back bedded with single sided adhesive foam tape and held-in-place with PVC snap-in glazing beads.

Weatherstripping:

Description	Quantity	Location
0.270" backed by 0.190" high polypile with center fin	1 Row	Fixed meeting stile
3/8" high vinyl wrapped foam bulb	1 Row	Bottom rail
0.187" backed by 0.250" high polypile with center fin	2 Rows	Stiles
1/4" high polypile dust plug	2 Rows	Ends of bottom rail, top of each stile

Frame Construction: Frame was constructed of extruded aluminum members and all corners were coped, butted, sealed, and fastened with two screws per corner. The fixed meeting rail was attached to the jambs with a plastic clip and two screws per end.

Mullion Construction: The mullion was constructed of an extruded aluminum member. It was fastened to the head and sill with four screws per end. All screw heads were sealed as well as the butt joint at the sill.

Sash Construction: The sash were constructed of extruded aluminum members and all corners were coped, butted, and fastened with one screw per corner.

Screen Construction: The screen was constructed of rolled aluminum members and the corners were keyed. The screen mesh was held-in-place with a flexible spline.

ALLEN N. REEVES
CERTIFICATE NO. 18[illegible]
STATE OF FLORIDA
PROFESSIONAL ENGINEER

Allen N. Reeves
28 MARCH 2002

Test Specimen Description: (Continued)

Hardware:

Description	Quantity	Location
Plastic tilt latches	4	Ends of interior meeting rail
Metal pivot bars	4	Ends of the bottom rails
Metal sweep lock	2	Midspan of interior meeting rail
Metal keeper	2	Midspan of fixed meeting rail
Sash stops	4	One per jamb
Block and tackle balance system	4	One per jamb
Spring loaded latch pins	2	6" from ends of screen top rail

Drainage:

Description	Quantity	Location
Sloped sill		Sill
1/4" wide by 3/16" high weepslot	4	Ends of exterior vertical sill leg

Installation: The test unit was installed into the 2" x 8" nominal Spruce-Pine-Fir #2 wood test buck utilizing the integral nailing fin and 1" roofing nails. Five per top, bottom, and sides of the nail fin were evenly spaced. The nail fin was bedded in a silicone sealant.

ALLEN N. REEVES
CERTIFICATE
NO. 18974
STATE OF
FLORIDA
PROFESSIONAL ENGINEER

Allen N. Reeves
28 MARCH 2002

Test Results

The results are tabulated as follows:

Title of Test - Test Method	Results	Allowed
Air Infiltration per ASTM E 283-91		
@ 0.56 psf (15 mph)	0.15 cfm/ft^2	0.30 cfm/ft^2
@ 1.57 psf (25 mph)	0.29 cfm/ft^2	0.30 cfm/ft^2
Water Resistance per ASTM E 547-96 (with and without screen) WTP = 5.25 psf	No leakage	No leakage
Uniform Load Structural per ASTM E 330-97 (Measurements reported were taken on the meeting rail) (load held for 33 seconds)		
@ 47.0 psf (exterior)	0.010"	0.24" max.
@ 47.0 psf (interior)	0.015"	0.24" max.

Note: No end measurements were taken on the member measured. The measurements stated above include displacement as well as bending. Only permanent sets were recorded, not deflection measurements. This statement applies to all uniform load tests performed.

Uniform Load Structural per ASTM E 330-97 (Measurements reported were taken on the meeting rail) (load held for 10 seconds)		
@ 70.5 psf (exterior)	0.060"	0.24" max
@ 70.5 psf (interior)	0.040"	0.24" max

Detailed drawings, representative samples of the test specimen, and a copy of this report will be retained by ATI for a period of four years. The above results were secured by using the designated test methods and they indicate compliance with the performance requirements of the above referenced specification. This report does not constitute certification of this product which may only be granted by the certification program administrator.

For ARCHITECTURAL TESTING, INC:

Scott D. Kramer
Technician

Allen N. Reeves, P.E.
Director – Engineering Services
28 MARCH 2002

ALLEN N. REEVES
CERTIFICATE
NO. 18[illegible]
STATE OF
FLORIDA
PROFESSIONAL ENGINEER

SDK:nlb/baw
01-36060.02

X
Opaque Inswing Unit

COP-WL-JH4101-02

WOOD-EDGE STEEL DOORS

APPROVED ARRANGEMENT:

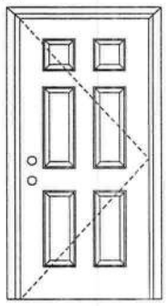

Warnock Hersey

Test Data Review Certificate #3026447A and COP/Test Report Validation Matrix #3026447A-001 provides additional information - available from the ITS/WH website (www.etlsemko.com), the Masonite website (www.masonite.com) or the Masonite technical center.

Note:
Units of other sizes are covered by this report as long as the panel used does not exceed 3'0" x 6'8".

Single Door
Maximum unit size = 3'0" x 6'8"

Design Pressure
+66.0/-66.0
limited water unless special threshold design is used.

Large Missile Impact Resistance
Hurricane protective system (shutters) is NOT REQUIRED.

Actual design pressure and impact resistant requirements for a specific building design and geographic location is determined by ASCE 7-national, state or local building codes specify the edition required.

MINIMUM ASSEMBLY DETAIL:

Compliance requires that minimum assembly details have been followed – see MAD-WL-MA0001-02.

MINIMUM INSTALLATION DETAIL:

Compliance requires that minimum installation details have been followed – see MID-WL-MA0001-02.

APPROVED DOOR STYLES:

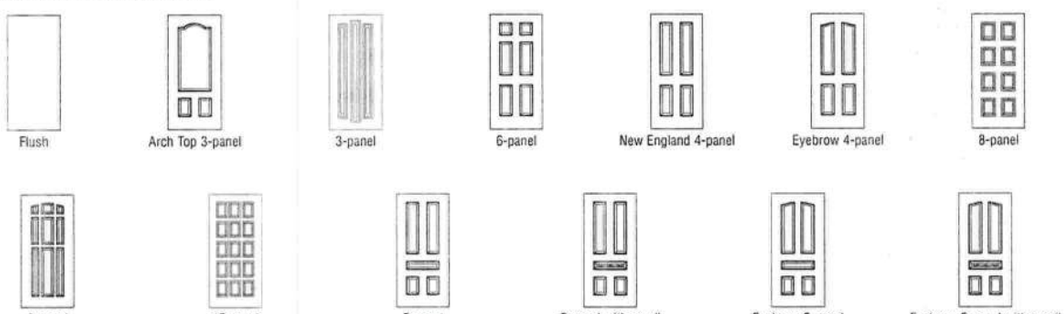

Johnson™ EntrySystems

June 17, 2002
Our continuing program of product improvement makes specifications, design and product detail subject to change without notice.

PREMDOR Collection Premium Quality Doors
Exclusively from Masonite®
Masonite International Corporation

X
Opaque Inswing Unit

COP-WL-JH4101-02

WOOD-EDGE STEEL DOORS

CERTIFIED TEST REPORTS:

NCTL 210-2185-1, 2, 3

Certifying Engineer and License Number: Barry D. Portney, P.E. / 16258.

Unit Tested in Accordance with Miami-Dade BCCO PA201, PA202 and PA203.

Door panels constructed from 26-gauge 0.017" thick steel skins. Both stiles constructed from wood. Top end rails constructed of 0.041" steel. Bottom end rails constructed of 0.021" steel. Interior cavity of slab filled with rigid polyurethane foam core.

Frame constructed of wood with an extruded aluminum threshold.

PRODUCT COMPLIANCE LABELING:

TESTED IN ACCORDANCE WITH
MIAMI-DADE BCCO
PA201, PA202 & PA203

COMPANY NAME
CITY, STATE

To the best of my knowledge and ability the above side-hinged exterior door unit conforms to the requirements of the 2001 Florida Building Code, Chapter 17 (Structural Tests and Inspections).

Kurt L Balthazor

State of Florida, Professional Engineer
Kurt Balthazor, P.E. – License Number 56533

Warnock Hersey

Test Data Review Certificate #3026447A and COP/Test Report Validation Matrix #3026447A-001 provides additional information - available from the ITS/WH website (www.etlsemko.com), the Masonite website (www.masonite.com) or the Masonite technical center.

Johnson™ EntrySystems

June 17, 2002
Our continuing program of product improvement makes specifications, design and product detail subject to change without notice.

PREMDOR Collection Premium Quality Doors

Exclusively from Masonite®
Masonite International Corporation

AAMA/NWWDA 101/I.S.2-97
TEST REPORT SUMMARY

Rendered to:

MI HOME PRODUCTS, INC.

SERIES/MODEL: 650
TYPE: Aluminum Picture Window

Title of Test	Results
Rating	F-R45 60 x 80
Overall Design Pressure	+45.0 psf -47.2 psf
Air Infiltration	0.04 cfm/ft^2
Water Resistance	8.25 psf
Structural Test Pressure	+67.5 psf -70.8 psf
Forced Entry Resistance	Grade 10

Reference should be made to Report No. 01-41135.01 dated 03/26/02 for complete test specimen description and data.

For ARCHITECTURAL TESTING, INC.

Mark A. Hess

Mark A. Hess, Technician

MAH:nlb

Allen N. Reeves
1 APRIL 2002

ALLEN N. REEVES
CERTIFICATE
No. 12078
STATE OF
FLORIDA
PROFESSIONAL ENGINEER

Architectural Testing

AAMA/NWWDA 101/I.S.2-97 TEST REPORT

Rendered to

MI HOME PRODUCTS, INC.
650 West Market Street
P.O. Box 370
Gratz, Pennsylvania 17030-0370

Report No: 01-41135.01
Test Date: 03/07/02
Report Date: 03/26/02
Expiration Date: 03/07/06

Project Summary: Architectural Testing, Inc. (ATI) was contracted by MI Home Products, Inc. to perform tests on Series/Model 650, aluminum picture window at their facility located in Elizabethville, Pennsylvania. The samples tested successfully met the performance requirements for a F-R45 60 x 80 rating.

Test Specification: The test specimen was evaluated in accordance with AAMA/NWWDA 101/I.S.2-97, *Voluntary Specifications for Aluminum, Vinyl (PVC) and Wood Windows and Glass Doors.*

Test Specimen Description:

Series/Model: 650

Type: Aluminum Picture Window

Overall Size: 5' 0" wide by 6' 8" high

Daylight Opening Size: 4' 9-1/4" wide by 6' 5-1/4" high

Finish All aluminum was white.

Glazing Details: The test specimen utilized 7/8" thick, sealed insulating glass constructed from two sheets of 3/16" thick, clear annealed glass and a metal reinforced butyl spacer system. The glass was interior glazed against double-sided adhesive foam tape and secured with aluminum snap-in glazing beads.

130 Derry Court
York, PA 17402-9405
phone: 717.764.7700
fax: 717.764.4129
www.archtest.com

Allen N. Reeves
1 APRIL 2002

ALLEN N. REEVES
CERTIFICATE NO. 11354
STATE OF FLORIDA
PROFESSIONAL ENGINEER

Test Specimen Description: (Continued)

Frame Construction: The frame was constructed of extruded aluminum with coped, butted, and sealed corners fastened with two #8 x 1" screws through the head and sill into each jamb screw boss.

Reinforcement: No reinforcement was utilized.

Installation: The test specimen was installed into a 2 x 8 #2 Spruce-Pine-Fir wood test buck. #8 x 2-1/2" installation screws were utilized 18" on center around the interior perimeter. Polyurethane was utilized to seal the exterior.

Test Results:

The results are tabulated as follows:

Paragraph	Title of Test - Test Method	Results	Allowed
	Air Infiltration (ASTM E 283-91)		
	@ 1.57 psf (25 mph)	0.04 cfm/ft^2	0.3 cfm/ft^2 max.

Note #1: The tested specimen meets the performance levels specified in AAMA/NWWDA 101/I.S. 2-97 for air infiltration.

	Water Resistance (ASTM E 547-00)		
	WTP = 2.86 psf	No leakage	No leakage
2.1.4.1	Uniform Load Deflection (ASTM E 330-97)		
	(Measurements reported were taken on the jamb)		
	(Loads were held for 33 seconds)		
	@ 25.9 psf (positive)	0.01"	0.41" max.
	@ 34.7 psf (negative)	0.01"	0.41" max.
2.1.4.2	Uniform Load Structural (ASTM E 330-97)		
	(Measurements reported were taken on the jamb)		
	(Loads were held for 10 seconds)		
	@ 38.9 psf (positive)	0.0"	0.29" max.
	@ 52.1 psf (negative)	0.01"	0.29" max.

ALLEN N. REEVES
LICENSE
NO. 12356
STATE OF
FLORIDA
PROFESSIONAL ENGINEER

Allen N. Reeves
1 APRIL 2002

Test Results: (Continued)

Paragraph	Title of Test - Test Method	Results	Allowed
	Forced Entry Resistance (ASTM F 588-97)		
	Type: D Grade: 10		
	Hand and Tool Manipulation Test	No entry	No entry
Optional Performance			
4.3	Water Resistance (ASTM E 547-00) WTP = 8.25 psf	No leakage	No leakage
	Uniform Load Deflection (ASTM E 330-97) (Measurements reported were taken on the jamb) (Loads were held for 33 seconds)		
	@ 45.0 psf (positive)	0.02"	0.41" max.
	@ 47.2 psf (negative)	0.02"	0.41" max.
	Uniform Load Structural (ASTM E 330-97) (Measurements reported were taken on the jamb) (Loads were held for 10 seconds)		
	@ 67.5 psf (positive)	0.01"	0.29" max.
	@ 70.8 psf (negative)	0.02"	0.29" max.

Detailed drawings, representative samples of the test specimen, and a copy of this report will be retained by ATI for a period of four years. The above results were secured by using the designated test methods and they indicate compliance with the performance requirements of the above referenced specification. This report does not constitute certification of this product, which may only be granted by the certification program administrator.

For ARCHITECTURAL TESTING, INC:

Mark A. Hess
Technician

MAH:nlb
01-41135.01

Allen N. Reeves, P.E.
Director - Engineering Services
1 APRIL 2002

ALLEN N. REEVES
CERTIFICATE
NO. 13256
STATE OF
FLORIDA
PROFESSIONAL ENGINEER

AAMA/NWWDA 101/I.S.2-97
TEST REPORT SUMMARY

Rendered to:

MI HOME PRODUCTS, INC.

SERIES/MODEL: 650 Fin
TYPE: Aluminum Single Hung Window

Title of Test	Results
Rating	H-R40 52 x 72
Overall Design Pressure	+45.0 psf -47.2 psf
Operating Force	11 lb max.
Air Infiltration	0.13 cfm/ft^2
Water Resistance	6.00 psf
Structural Test Pressure	+67.5 psf -70.8 psf
Deglazing	Passed
Forced Entry Resistance	Grade 10

Reference should be made to Report No. 01-41134.01 dated 03/26/02 for complete test specimen description and data.

For ARCHITECTURAL TESTING, INC.

Mark A. Hess, Technician

MAH:nlb

Allen M. Reeves
1 APRIL 2002

ALLEN M. REEVES
CERTIFICATE
NO. 19354
STATE OF
FLORIDA
PROFESSIONAL ENGINEER

Architectural Testing

AAMA/NWWDA 101/I.S.2-97 TEST REPORT

Rendered to

MI HOME PRODUCTS, INC.
650 West Market Street
P.O. Box 370
Gratz, Pennsylvania 17030-0370

Report No: 01-41134.01
Test Date: 03/07/02
Report Date: 03/26/02
Expiration Date: 03/07/06

Project Summary: Architectural Testing, Inc. (ATI) was contracted by MI Home Products, Inc. to perform tests on Series/Model 650 Fin, aluminum single hung window at their facility located in Elizabethville, Pennsylvania. The samples tested successfully met the performance requirements for a H-R40 52 x 72 rating.

Test Specification: The test specimen was evaluated in accordance with AAMA/NWWDA 101/I.S.2-97, *Voluntary Specifications for Aluminum, Vinyl (PVC) and Wood Windows and Glass Doors.*

Test Specimen Description:

Series/Model: 650 Fin

Type: Aluminum Single Hung Window

Overall Size: 4' 4-1/4" wide by 6' 0-3/8" high

Active Sash Size: 4' 1-3/4" wide by 3' 0-5/8" high

Daylight Opening Size: 3' 11-3/8" wide by 2' 9-1/2" high

Screen Size: 4' 0-1/4" wide by 2' 11-1/8" high

Finish: All aluminum was white.

Glazing Details: The active and fixed lites utilized 5/8" thick, sealed insulating glass constructed from two sheets of 1/8" thick, clear annealed glass and a metal reinforced butyl spacer system. The active sash was channel glazed utilizing a flexible vinyl wrap-around gasket. The fixed lite was interior glazed against double-sided adhesive foam tape and secured with PVC snap-in glazing beads.

130 Derry Court
York, PA 17402-9405
phone: 717.764.7700
fax: 717.764.4129
www.archtest.com

Allen M. Reeves
1 APRIL 2002

REEVES LICENSE NO. 19354 STATE OF FLORIDA PROFESSIONAL ENGINEER

Test Specimen Description: (Continued)

Weatherstripping:

Description	Quantity	Location
0.230" high by 0.270" backed polypile with center fin	1 Row	Fixed meeting rail
0.250" high by 0.187" backed polypile with center fin	2 Rows	Active sash stiles
1/2" x 1/2" dust plug	4 Pieces	Active sash, top and bottom of stiles
1/4" foam-filled vinyl bulb seal	1 Row	Active sash, bottom rail

Frame Construction: The frame was constructed of extruded aluminum with coped, butted, and sealed corners fastened with two #8 x 1" screws through the head and sill into each jamb screw boss. End caps were utilized on the ends of the fixed meeting rail and secured with two 1-1/4" screws per cap. Meeting rail was secured to the frame utilizing two 1-1/4" screws.

Sash Construction: The sash was constructed of extruded aluminum with coped, butted, and sealed corners fastened with two #8 x 1-1/2" screws through the rails into each jamb screw boss.

Screen Construction: The screen was constructed from roll-formed aluminum with keyed corners. The fiberglass mesh was secured with a flexible spline.

Hardware:

Description	Quantity	Location
Metal cam lock with keeper		Midspan, active meeting rail with keeper adjacent on fixed meeting rail
Plastic tilt latch	2	Active sash, meeting rail ends
Metal tilt pin	2	Active sash, bottom rail ends
Balance assembly	2	One in each jamb
Screen plunger	2	4" from rail ends on top rail

ALLEN N. REEVES
CERTIFICATE
NO. 19354
STATE OF
FLORIDA
PROFESSIONAL ENGINEER

Allen N. Reeves
1 APRIL 2002

Test Specimen Description: (Continued)

Drainage: Sloped sill

Reinforcement: No reinforcement was utilized.

Installation: The test specimen was installed into a 2 x 8 #2 Spruce-Pine-Fir wood test buck with #8 x 1-5/8" drywall screws every 8" on center around the nail fin. Polyurethane was used as a sealant under the nail fin and around the exterior perimeter.

Test Results:

The results are tabulated as follows:

Paragraph	Title of Test - Test Method	Results	Allowed
2.2.1.6.1	Operating Force	11 lbs	30 lbs max
	Air Infiltration (ASTM E 283-91) @ 1.57 psf (25 mph)	0.13 cfm/ft^2	0.3 cfm/ft^2 max

Note #1: The tested specimen meets the performance levels specified in AAMA/NWWDA 101/I.S. 2-97 for air infiltration.

	Water Resistance (ASTM E 547-00) (with and without screen) WTP = 2.86 psf	No leakage	No leakage
2.1.4.1	Uniform Load Deflection (ASTM E 330-97) (Measurements reported were taken on the meeting rail) (Loads were held for 33 seconds)		
	@ 25.9 psf (positive)	0.42"*	0.26" max.
	@ 34.7 psf (negative)	0.43"*	0.26" max.

**Exceeds L/175 for deflection, but passes all other test requirements.*

2.1.4.2	Uniform Load Structural (ASTM E 330-97) (Measurements reported were taken on the meeting rail) (Loads were held for 10 seconds)		
	@ 38.9 psf (positive)	0.02"	0.18" max.
	@ 52.1 psf (negative)	0.02"	0.18" max.

Allen N. Reeves
1 APRIL 2002

ALLEN N. REEVES
CERTIFICATE
NO. 13357
STATE OF
FLORIDA
PROFESSIONAL ENGINEER

Test Specimen Description: (Continued)

Paragraph	Title of Test - Test Method	Results	Allowed
2.2.1.6.2	Deglazing Test (ASTM E 987)		
	In operating direction at 70 lbs		
	Meeting rail	0.12"/25%	0.50"/100%
	Bottom rail	0.12"/25%	0.50"/100%
	In remaining direction at 50 lbs		
	Left stile	0.06"/12%	0.50"/100%
	Right stile	0.06"/12%	0.50"/100%
	Forced Entry Resistance (ASTM F 588-97)		
	Type: A Grade: 10		
	Lock Manipulation Test	No entry	No entry
	Tests A1 through A5	No entry	No entry
	Test A7	No entry	No entry
	Lock Manipulation Test	No entry	No entry
Optional Performance			
4.3	Water Resistance (ASTM E 547-00) (with and without screen) WTP = 6.00 psf	No leakage	No leakage
	Uniform Load Deflection (ASTM E 330-97) (Measurements reported were taken on the meeting rail) (Loads were held for 33 seconds)		
	@ 45.0 psf (positive)	0.47"*	0.26" max.
	@ 47.2 psf (negative)	0.46"*	0.26" max.

**Exceeds L/175 for deflection, but passes all other test requirements.*

	Uniform Load Structural (ASTM E 330-97) (Measurements reported were taken on the meeting rail) (Loads were held for 10 seconds)		
	@ 67.5 psf (positive)	0.05"	0.18" max.
	@ 70.8 psf (negative)	0.05"	0.18" max.

Allen N. Reyes
1 APRIL 2002

ALLEN N. REEYES
CERTIFICATE NO. 18334
STATE OF FLORIDA
PROFESSIONAL ENGINEER

Detailed drawings, representative samples of the test specimen, and a copy of this report will be retained by ATI for a period of four years. The above results were secured by using the designated test methods and they indicate compliance with the performance requirements of the above referenced specification. This report does not constitute certification of this product, which may only be granted by the certification program administrator.

For ARCHITECTURAL TESTING, INC:

Mark A. Hess
Technician

Allen N. Reeves, P.E.
Director - Engineering Services
1 APRIL 2002

MAH:nlb
01-41134.01

ALLEN N. REEVES
CERTIFICATE
NO. 13954
STATE OF
FLORIDA
PROFESSIONAL ENGINEER

LITTLE
HVAC LOAD ANALYSIS

for

MACK ROBINSON CONSTRUCTION

Prepared By:

DAVID HALL
DAVID HALL'S INC.
PO BOX 244
LAKE CITY FL. 32056
386-755-9792
10/18/05

Miscellaneous Project Data

Project File Name: MACK ROBINSON, LITTLE

System Input Data

—System 1—	Outdoor Dry Bulb	Outdoor Wet Bulb	Indoor Rel.Hum.	Indoor Dry Bulb	Grains Difference
Winter:	27	N/A	N/A	72	N/A
Summer:	96	78	50%	75	51

External Overhangs

No.	Projection	Offset	No.	Projection	Offset
1	3	1	6	0	0
2	5	0	7	0	0
3	4	0.5	8	0	0
4	0	0	9	0	0
5	0	0	10	0	0

Duct Sizing Inputs

	Runouts		Main Trunk	
Duct Material:	Flexible Duct		Fiberglass Duct Board	
Roughness Factor:	0.010000		0.003000	
Pressure Drop:	0.1000	In.wg/100 Ft.	0.1000	In.wg/100 Ft.
Minimum Velocity:	450.0	Ft./Minute	650.0	Ft./Minute
Maximum Velocity:	750.0	Ft./Minute	900.0	Ft./Minute
Minimum Height:	0	Inches	0	Inches
Maximum Height:	0	Inches	0	Inches

Outside Air Data

	Winter		Summer	
Infiltration:	0.900	AC/Hr	0.400	AC/Hr
Volume of Conditioned Space:	X 13304	Cu.Ft.	X 13304	Cu.Ft.
	11,974	Cu.Ft./Hr	5,322	Cu.Ft./Hr
	X 0.0167		X 0.0167	
Total Building Infiltration:	199.56	CFM	88.69334	CFM
Total Building Ventilation:	0	CFM	0	CFM

—System 1—

Infiltration & Ventilation Sensible Gain Multiplier:	23.10	= (1.10 X 21.00 Summer Temp. Difference)
Infiltration & Ventilation Latent Gain Multiplier:	34.86	= (0.68 X 51.27 Grains Difference)
Infiltration & Ventilation Sensible Loss Multiplier:	49.50	= (1.10 X 45.00 Winter Temp. Difference)

Total Building Summary Loads

Component Description	Area Quan	Sen. Loss	Lat. Gain	Sen. Gain	Total Gain
3C Window Double Pane Clear Glass Metal Frame	231	7,537	0	7,863	7,863
9G French Door Double Clear Glass Wood Frame	21	493	0	491	491
10D Door Wood Solid Core	42	870	0	476	476
12C Wall R-11 + 1/2" Gypsum(R-0.5)	1,130	4,577	0	2,502	2,502
16G Ceiling R-30 Insulation	1,612	2,394	0	2,394	2,394
22A Slab on Grade No Edge Insulation	176	6,416	0	0	0
Subtotals for structure:	3,212	22,287	0	13,726	13,726
Active People:	3	0	690	900	1,590
Inactive People:	0	0	0	0	0
Appliances:	0	0	1,200	1,200	2,400
Lighting:	0	0		3,615	
Ductwork:	0	1,608	0	2,149	2,149
Infiltration: Winter CFM: 199.6, Summer CFM: 88.7	294	9,879	3,094	2,049	5,143
Ventilation: Winter CFM: 0.0, Summer CFM: 0.0	0	0	0	0	0
Sensible Gain Total:				23,639	
Temperature Swing Multiplier:				X1.00	
Building Load Totals:		33,774	4,984	23,639	28,623

Check Figures

Total Building Supply CFM: 1074
Square feet of room area: 1,615

CFM per square foot: 0.665
Square feet per ton: 631.281

Building Loads

Total heating required with outside air:	33,774	Btuh	33.774	MBH
Total sensible gain:	23,639	Btuh	83	%
Total latent gain:	4,984	Btuh	17	%
Total cooling required with outside air:	28,623	Btuh	2.385	Tons (based on sensible + latent)
			2.558	Tons (based on 77% sensible capacity)

Notes

Calculations are based on 7th edition of ACCA Manual J.
All computed results are estimates as building use and weather may vary.
Be sure to select a unit that meets both sensible and latent loads.

Building Load Pie Charts

Total Building Loss 33,774 BTUH

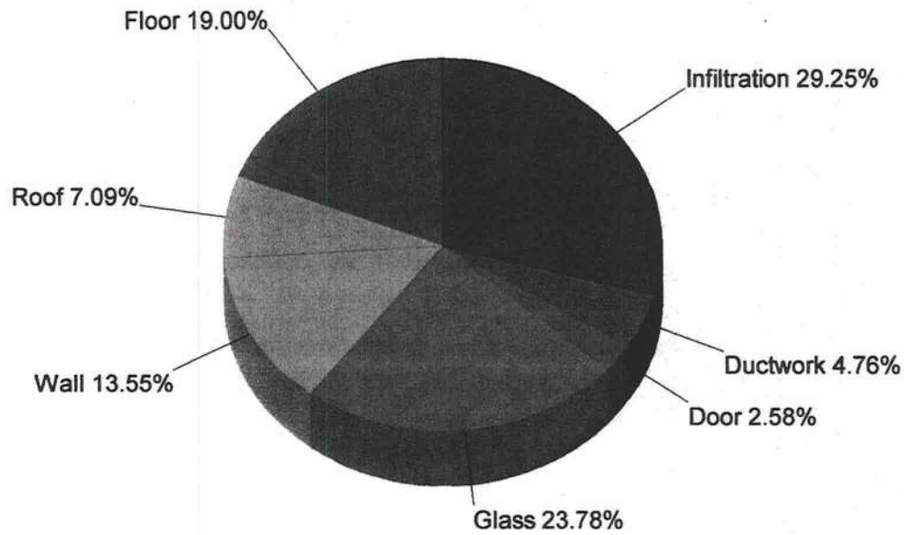

Total Building Gain 28,623 BTUH

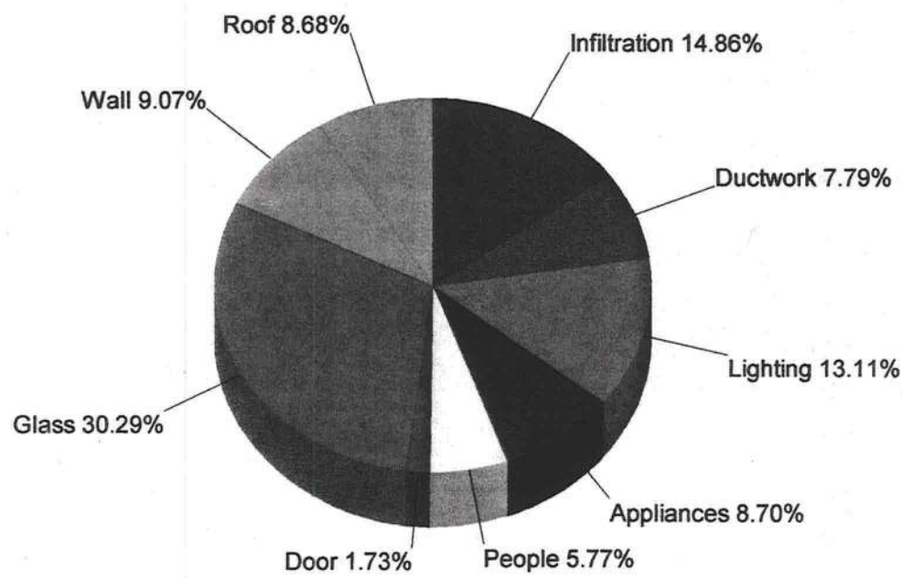

System #1 Summary Loads

Component Description	Area Quan	Sen. Loss	Lat. Gain	Sen. Gain	Total Gain
3C Window Double Pane Clear Glass Metal Frame	231	7,537	0	7,863	7,863
9G French Door Double Clear Glass Wood Frame	21	493	0	491	491
10D Door Wood Solid Core	42	870	0	476	476
12C Wall R-11 + 1/2" Gypsum(R-0.5)	1,130	4,577	0	2,502	2,502
16G Ceiling R-30 Insulation	1,612	2,394	0	2,394	2,394
22A Slab on Grade No Edge Insulation	176	6,416	0	0	0
Subtotals for structure:	3,212	22,287	0	13,726	13,726
Active People:	3	0	690	900	1,590
Inactive People:	0	0	0	0	0
Appliances:	0	0	1,200	1,200	2,400
Lighting:	0	0		3,615	
Ductwork:	0	1,608	0	2,149	2,149
Infiltration: Winter CFM: 199.6, Summer CFM: 88.7	294	9,879	3,094	2,049	5,143
Ventilation: Winter CFM: 0.0, Summer CFM: 0.0	0	0	0	0	0
Sensible Gain Total:				23,639	
Temperature Swing Multiplier:				X1.00	
System Load Totals:		33,774	4,984	23,639	28,623

Check Figures

Supply CFM:	1,074	CFM per square foot:	0.665
Square feet of room area:	1,615	Square feet per ton:	631.281

System Loads

Total heating required with outside air:	33,774	Btuh	33.774	MBH
Total sensible gain:	23,639	Btuh	83	%
Total latent gain:	4,984	Btuh	17	%
Total cooling required with outside air:	28,623	Btuh	2.385	Tons (based on sensible + latent)
			2.558	Tons (based on 77% sensible capacity)

Notes

Calculations are based on 7th edition of ACCA Manual J.
All computed results are estimates as building use and weather may vary.
Be sure to select a unit that meets both sensible and latent loads.

Room Load Summary Reports

System #1 Room Load Summary

No	Room Name	Area SF	Htg Sens Btuh	Htg Nom CFM	Run Duct Size	Run Duct Vel	Clg Sens Btuh	Clg Lat Btuh	Clg Nom CFM	Zone Adj Fact	Clg Adj CFM	Air Sys CFM
	—Zone 1—											
1	Living Room	294	5,532	72	1-10	489	4,346	861	198	1.35	267	198
2	Dining Room	161	4,320	56	1-6	572	2,470	536	112	1.00	112	112
3	Kitchen	136	1,595	21	1-7	466	2,741	1,525	125	1.00	125	125
4	Bedroom#3	179	5,161	67	1-9	462	3,325	473	151	1.35	204	151
5	Bath	70	717	9	1-4	441	846	32	38	1.00	38	38
6	Bedroom#2	166	4,089	53	1-6	481	2,077	316	94	1.00	94	94
7	Utility Room	167	4,125	54	1-6	548	2,368	316	108	1.00	108	108
8	Master Bedroom	206	3,215	42	1-6	514	2,222	546	101	1.00	101	101
9	Master Closet	54	501	7	6-0	0	420	0	19	1.00	19	19
10	Master Bath	109	2,664	35	1-5	583	1,749	158	80	1.00	80	80
11	Foyer	73	1,855	24	1-4	560	1,075	221	49	1.00	49	49
System 1 Totals		1615	33,774	439			23,639	4,984	1,074		1,197	1,074

Main Trunk Size: 16x12 in.

System #1 Cooling System Summary

	Cooling Tons	Sensible/Latent Split	Sensible Btuh	Latent Btuh	Total Btuh
Net Required:	2.385	83%/17%	23,639	4,984	28,623
Recommended:	2.558	77%/23%	23,639	7,061	30,699

Alpine Engineered Products, Inc.

1950 Marley Drive Haines City, FL 33844
Florida Engineering Certificate of Authorization Number: 567
Florida Certificate of Product Approval # FL1999
 Document ID:1SQF487-Z0312153242

Truss Fabricator: Anderson Truss Company
Job Identification: 5-399-MACK ROBINSON-LITTLE
Truss Count: 35
Model Code: Florida Building Code 2001
Truss Criteria: ANSI/TPI-1995(STD)/FBC
Engineering Software: Alpine Software,Version 7.04.
Structural Engineer of Record:
Address:
Minimum Design Loads: Roof - 40.0 PSF @ 1.25 Duration
Floor - N/A
Wind - 110 MPH ASCE 7-98 -Closed

Seal Date: 09/12/2005

-Truss Design Engineer-
Arthur R. Fisher
Florida License Number: 59687
1950 Marley Drive
Haines City, FL 33844

Notes:

1. Determination as to the suitability of these truss components for the structure is the responsibility of the building designer/engineer of record, as defined in ANSI/TPI 1-1995 Section 2.2
2. The drawing date shown on this index sheet must match the date shown on the individual truss component drawing.
3. As shown on attached drawings; the drawing number is preceded by: HCUSR487

Details: BRCLBSUB-A11015EC-GBLLETIN

#	Ref Description	Drawing#	Date
1	88060--A1	05255092	09/12/05
2	88061--A2	05255093	09/12/05
3	88062--A3	05255094	09/12/05
4	88063--A4	05255095	09/12/05
5	88064--A5	05255096	09/12/05
6	88065--A6	05255097	09/12/05
7	88066--AA1	05255098	09/12/05
8	88067--AA2	05255077	09/12/05
9	88068--AA3	05255078	09/12/05
10	88069--AA4	05255079	09/12/05
11	88070--AA5	05255080	09/12/05
12	88071--AA6	05255081	09/12/05
13	88072--AA7	05255082	09/12/05
14	88073--B1	05255099	09/12/05
15	88074--B2	05255083	09/12/05
16	88075--B3	05255084	09/12/05
17	88076--C1-GE	05255100	09/12/05
18	88077--C2	05255085	09/12/05
19	88078--C3	05255086	09/12/05
20	88079--C4	05255087	09/12/05
21	88080--C5	05255088	09/12/05
22	88081--C6	05255089	09/12/05
23	88082--D1	05255101	09/12/05
24	88083--HJA	05255102	09/12/05
25	88084--HJ7	05255103	09/12/05
26	88085--EJ7	05255104	09/12/05
27	88086--J7	05255105	09/12/05
28	88087--J5	05255106	09/12/05
29	88088--J3	05255090	09/12/05
30	88089--J1	05255107	09/12/05
31	88090--MA	05255091	09/12/05
32	88091--AP1	05255108	09/12/05
33	88092--AP2	05255109	09/12/05
34	88093--AP3	05255110	09/12/05
35	88094--AP4	05255111	09/12/05

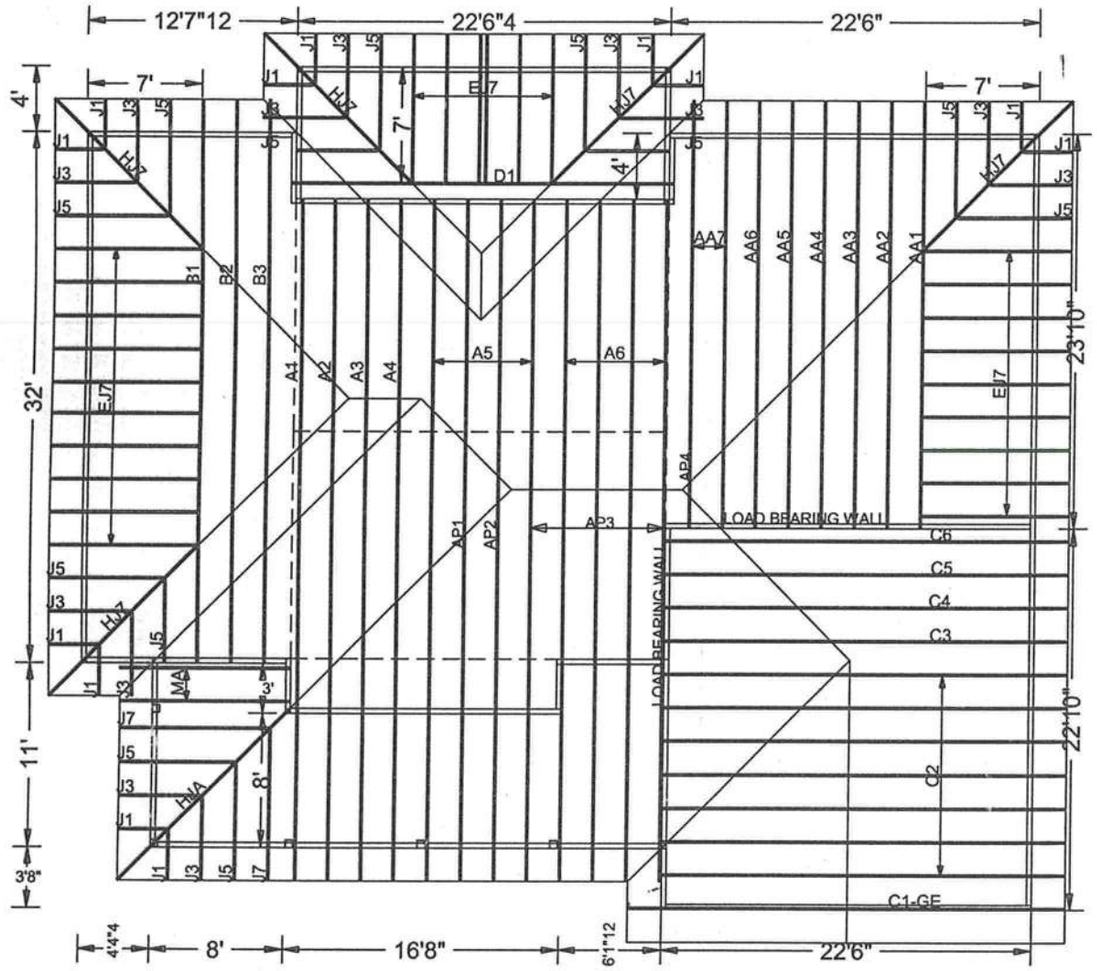

9/12/05

#5-399
MACK ROBINSON
LITTLE RESIDENCE

Scale: 3/32" = 1'

JOB NO: 5-399	PAGE NO: 1 OF 1

(5-399-MACK ROBINSON-LITTLE - A1)

Top chord 2x4 SP #2 Dense
Bot chord 2x4 SP #2 Dense
Webs 2x4 SP #3

Left end vertical not exposed to wind pressure.

(A) Continuous lateral bracing equally spaced on member.

Shim all supports to solid bearing.

** Negative reaction(s) of -517# MAX. (See below) from a non-wind load case requires uplift connection.

110 mph wind, 11.10 ft mean hgt, ASCE 7-98, CLOSED bldg, not located within 4.50 ft from roof edge, CAT II, EXP B, wind TC DL=5.0 psf, wind BC DL=5.0 psf.

Deflection meets L/360 live and L/240 total load.

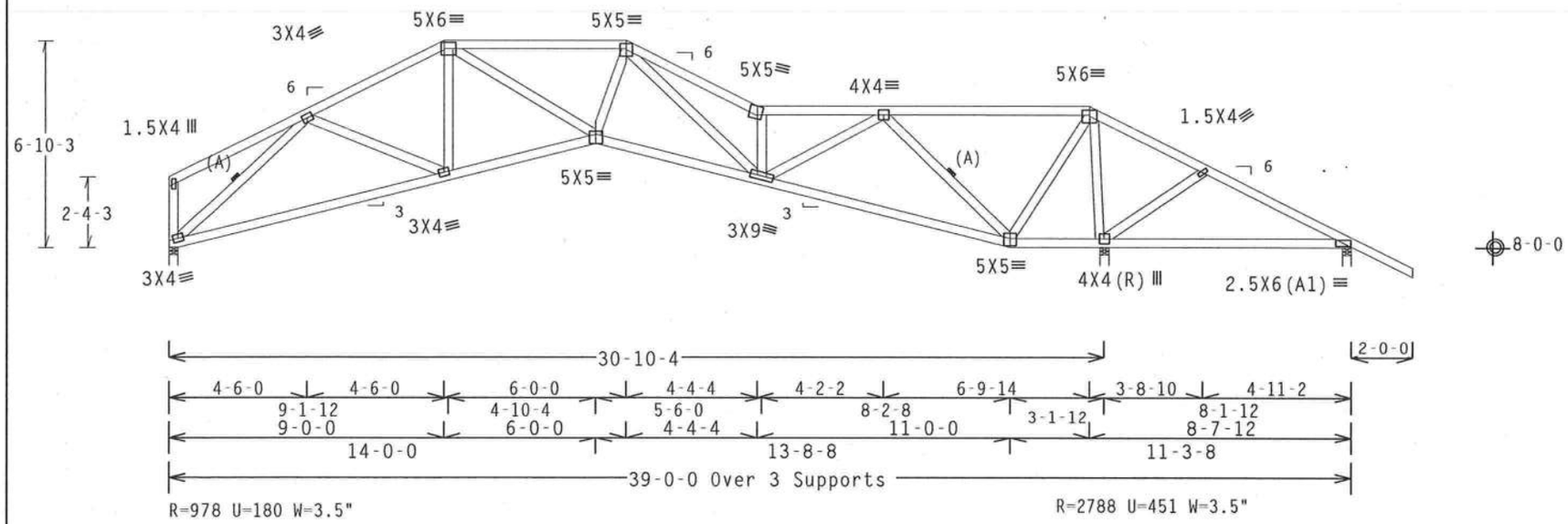

PLT TYP. Wave TPI | Design Crit: TPI-1995(STD)/FBC | 7.04.0805 | QTY:1 | FL/-/4/-/-/R/- | Scale =.1875"/Ft.

ALPINE

Alpine Engineered Products, Inc
1950 Marley Drive
Haines City, FL 33844
FL Certificate of Authorization # 567

WARNING TRUSSES REQUIRE EXTREME CARE IN FABRICATION, HANDLING, SHIPPING, INSTALLING AND BRACING. REFER TO BCSI 1-03 (BUILDING COMPONENT SAFETY INFORMATION), PUBLISHED BY TPI (TRUSS PLATE INSTITUTE, 583 D'ONOFRIO DR., SUITE 200, MADISON, WI 53719) AND WTCA (WOOD TRUSS COUNCIL OF AMERICA, 6300 ENTERPRISE LN, MADISON, WI 53719) FOR SAFETY PRACTICES PRIOR TO PERFORMING THESE FUNCTIONS. UNLESS OTHERWISE INDICATED, TOP CHORD SHALL HAVE PROPERLY ATTACHED STRUCTURAL PANELS AND BOTTOM CHORD SHALL HAVE A PROPERLY ATTACHED RIGID CEILING.

IMPORTANT FURNISH A COPY OF THIS DESIGN TO THE INSTALLATION CONTRACTOR. ALPINE ENGINEERED PRODUCTS, INC. SHALL NOT BE RESPONSIBLE FOR ANY DEVIATION FROM THIS DESIGN; ANY FAILURE TO BUILD THE TRUSS IN CONFORMANCE WITH TPI; OR FABRICATING, HANDLING, SHIPPING, INSTALLING & BRACING OF TRUSSES. DESIGN CONFORMS WITH APPLICABLE PROVISIONS OF NDS (NATIONAL DESIGN SPEC, BY AF&PA) AND TPI. ALPINE CONNECTOR PLATES ARE MADE OF 20/18/16GA (W,H/S/K) ASTM A653 GRADE 40/60 (W, K/H,S) GALV. STEEL. APPLY PLATES TO EACH FACE OF TRUSS AND, UNLESS OTHERWISE LOCATED ON THIS DESIGN, POSITION PER DRAWINGS 160A-2. ANY INSPECTION OF PLATES FOLLOWED BY (I) SHALL BE PER ANNEX A3 OF TPI1-2002 SEC.3. A SEAL ON THIS DRAWING INDICATES ACCEPTANCE OF PROFESSIONAL ENGINEERING RESPONSIBILITY SOLELY FOR THE TRUSS COMPONENT DESIGN SHOWN. THE SUITABILITY AND USE OF THIS COMPONENT FOR ANY BUILDING IS THE RESPONSIBILITY OF THE BUILDING DESIGNER PER ANSI/TPI 1 SEC. 2.

ARTHUR R. FISHER LICENSE No. 59087 STATE OF FLORIDA PROFESSIONAL ENGINEER

Sep 12 '05

TC LL	20.0 PSF	REF R487-- 88060
TC DL	10.0 PSF	DATE 09/12/05
BC DL	10.0 PSF	DRW HCUSR487 05255092
BC LL	0.0 PSF	HC-ENG DF/AF
TOT.LD.	40.0 PSF	SEQN- 31894
DUR.FAC.	1.25	FROM JP
SPACING	24.0"	JREF- 1SQF487_Z03

(5-399-MACK ROBINSON-LITTLE - A2)

Top chord 2x4 SP #2 Dense
Bot chord 2x4 SP #2 Dense
Webs 2x4 SP #3

Left end vertical not exposed to wind pressure.

(A) Continuous lateral bracing equally spaced on member.

Shim all supports to solid bearing.

** Negative reaction(s) of -318# MAX. (See below) from a non-wind load case requires uplift connection.

110 mph wind, 11.60 ft mean hgt, ASCE 7-98, CLOSED bldg, not located within 4.50 ft from roof edge, CAT II, EXP B, wind TC DL=5.0 psf, wind BC DL=5.0 psf.

Deflection meets L/360 live and L/240 total load.

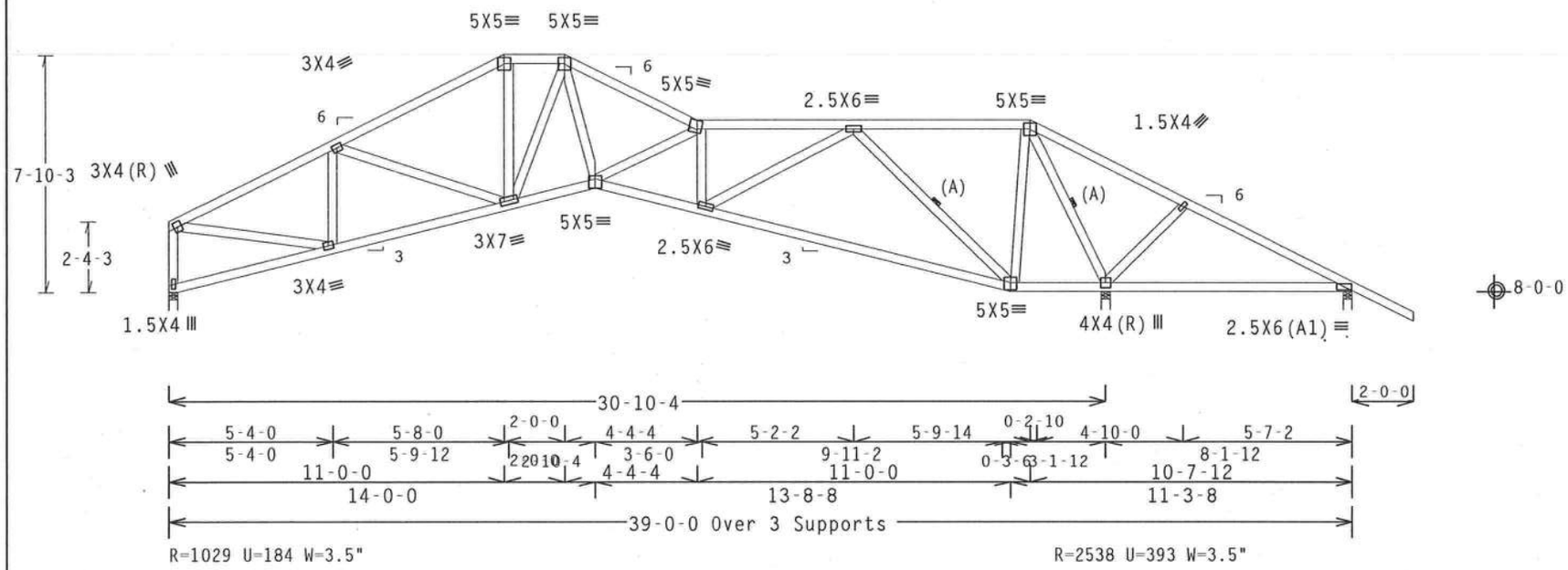

PLT TYP. Wave TPI | Design Crit: TPI-1995(STD)/FBC | 7.04.0805 | QTY:1 | FL/-/4/-/-/R/- | Scale =.1875"/Ft.

ALPINE
Alpine Engineered Products, Inc
1950 Marley Drive
Haines City, FL 33844
FL Certificate of Authorization # 567

WARNING TRUSSES REQUIRE EXTREME CARE IN FABRICATION, HANDLING, SHIPPING, INSTALLING AND BRACING. REFER TO BCSI 1-03 (BUILDING COMPONENT SAFETY INFORMATION), PUBLISHED BY TPI (TRUSS PLATE INSTITUTE, 583 D'ONOFRIO DR., SUITE 200, MADISON, WI 53719) AND WTCA (WOOD TRUSS COUNCIL OF AMERICA, 6300 ENTERPRISE LN, MADISON, WI 53719) FOR SAFETY PRACTICES PRIOR TO PERFORMING THESE FUNCTIONS. UNLESS OTHERWISE INDICATED, TOP CHORD SHALL HAVE PROPERLY ATTACHED STRUCTURAL PANELS AND BOTTOM CHORD SHALL HAVE A PROPERLY ATTACHED RIGID CEILING.

IMPORTANT FURNISH A COPY OF THIS DESIGN TO THE INSTALLATION CONTRACTOR. ALPINE ENGINEERED PRODUCTS, INC. SHALL NOT BE RESPONSIBLE FOR ANY DEVIATION FROM THIS DESIGN; ANY FAILURE TO BUILD THE TRUSS IN CONFORMANCE WITH TPI; OR FABRICATING, HANDLING, SHIPPING, INSTALLING & BRACING OF TRUSSES. DESIGN CONFORMS WITH APPLICABLE PROVISIONS OF NDS (NATIONAL DESIGN SPEC, BY AF&PA) AND TPI. ALPINE CONNECTOR PLATES ARE MADE OF 20/18/16GA (W,H/S/K) ASTM A653 GRADE 40/60 (W, K/H,S) GALV. STEEL. APPLY PLATES TO EACH FACE OF TRUSS AND, UNLESS OTHERWISE LOCATED ON THIS DESIGN, POSITION PER DRAWINGS 160A-Z. ANY INSPECTION OF PLATES FOLLOWED BY (1) SHALL BE PER ANNEX A3 OF TPI1-2002 SEC.3. A SEAL ON THIS DRAWING INDICATES ACCEPTANCE OF PROFESSIONAL ENGINEERING RESPONSIBILITY SOLELY FOR THE TRUSS COMPONENT DESIGN SHOWN. THE SUITABILITY AND USE OF THIS COMPONENT FOR ANY BUILDING IS THE RESPONSIBILITY OF THE BUILDING DESIGNER PER ANSI/TPI 1 SEC. 2.

ARTHUR R. FISHER LICENSE No. 59687 STATE OF FLORIDA PROFESSIONAL ENGINEER
Sep 12 '05

TC LL	20.0 PSF	REF R487-- 88061
TC DL	10.0 PSF	DATE 09/12/05
BC DL	10.0 PSF	DRW HCUSR487 05255093
BC LL	0.0 PSF	HC-ENG DF/AF
TOT.LD.	40.0 PSF	SEQN- 31905
DUR.FAC.	1.25	FROM JP
SPACING	24.0"	JREF- 1SQF487_Z03

Top chord 2x4 SP #2 Dense
Bot chord 2x4 SP #2 Dense
Webs 2x4 SP #3

Left end vertical not exposed to wind pressure.

(A) Continuous lateral bracing equally spaced on member.

Shim all supports to solid bearing.

** Negative reaction(s) of -214# MAX. (See below) from a non-wind load case requires uplift connection.

110 mph wind, 11.01 ft mean hgt, ASCE 7-98, CLOSED bldg, not located within 4.50 ft from roof edge, CAT II, EXP B, wind TC DL=5.0 psf, wind BC DL=5.0 psf.

Deflection meets L/360 live and L/240 total load.

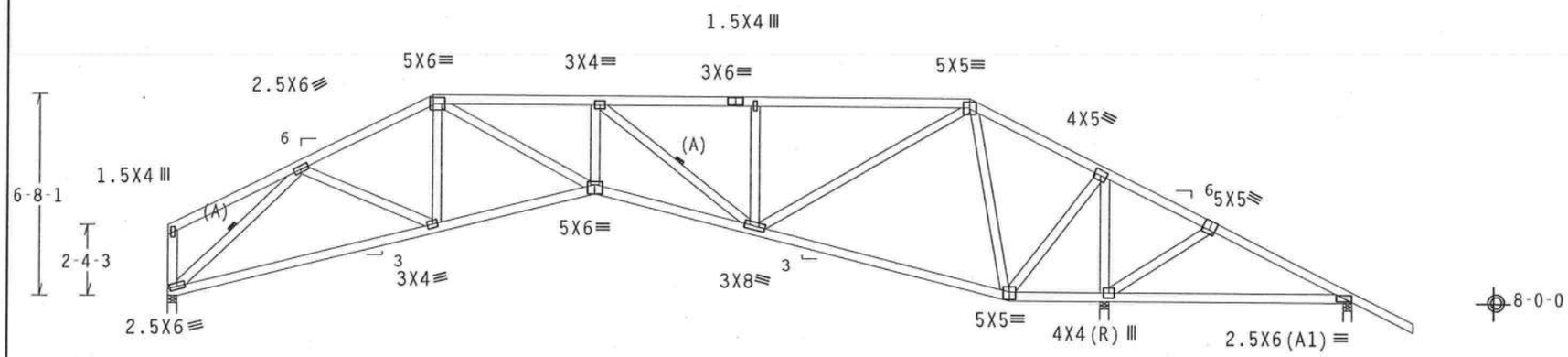

** R=-214 U=180 W=3.5"

PLT TYP. Wave TPI | Design Crit: TPI-1995(STD)/FBC | 7.04.0805 | QTY:1 | FL/-/4/-/-/R/- | Scale =.1875"/Ft.

ALPINE

Alpine Engineered Products, Inc.
1950 Marley Drive
Haines City, FL 33844
FL Certificate of Authorization # 567

WARNING TRUSSES REQUIRE EXTREME CARE IN FABRICATION, HANDLING, SHIPPING, INSTALLING AND BRACING. REFER TO BCSI 1-03 (BUILDING COMPONENT SAFETY INFORMATION), PUBLISHED BY TPI (TRUSS PLATE INSTITUTE, 583 D'ONOFRIO DR., SUITE 200, MADISON, WI 53719) AND WTCA (WOOD TRUSS COUNCIL OF AMERICA, 6300 ENTERPRISE LN, MADISON, WI 53719) FOR SAFETY PRACTICES PRIOR TO PERFORMING THESE FUNCTIONS. UNLESS OTHERWISE INDICATED, TOP CHORD SHALL HAVE PROPERLY ATTACHED STRUCTURAL PANELS AND BOTTOM CHORD SHALL HAVE A PROPERLY ATTACHED RIGID CEILING.

IMPORTANT FURNISH A COPY OF THIS DESIGN TO THE INSTALLATION CONTRACTOR. ALPINE ENGINEERED PRODUCTS, INC. SHALL NOT BE RESPONSIBLE FOR ANY DEVIATION FROM THIS DESIGN; ANY FAILURE TO BUILD THE TRUSS IN CONFORMANCE WITH TPI; OR FABRICATING, HANDLING, SHIPPING, INSTALLING & BRACING OF TRUSSES. DESIGN CONFORMS WITH APPLICABLE PROVISIONS OF NDS (NATIONAL DESIGN SPEC. BY AF&PA) AND TPI. ALPINE CONNECTOR PLATES ARE MADE OF 20/18/16GA (W,H/S/K) ASTM A653 GRADE 40/60 (W, K/H,S) GALV. STEEL. APPLY PLATES TO EACH FACE OF TRUSS AND, UNLESS OTHERWISE LOCATED ON THIS DESIGN, POSITION PER DRAWINGS 160A-Z. ANY INSPECTION OF PLATES FOLLOWED BY (1) SHALL BE PER ANNEX A3 OF TPI1-2002 SEC.3. A SEAL ON THIS DRAWING INDICATES ACCEPTANCE OF PROFESSIONAL ENGINEERING RESPONSIBILITY SOLELY FOR THE TRUSS COMPONENT DESIGN SHOWN. THE SUITABILITY AND USE OF THIS COMPONENT FOR ANY BUILDING IS THE RESPONSIBILITY OF THE BUILDING DESIGNER PER ANSI/TPI 1 SEC. 2.

ARTHUR R. FISHER
LICENSE
No. 59687
STATE OF
FLORIDA
PROFESSIONAL ENGINEER

Sep 12 '05

TC LL	20.0 PSF	REF	R487-- 88062
TC DL	10.0 PSF	DATE	09/12/05
BC DL	10.0 PSF	DRW	HCUSR487 05255094
BC LL	0.0 PSF	HC-ENG	DF/AF
TOT.LD.	40.0 PSF	SEQN-	31917
DUR.FAC.	1.25	FROM	JP
SPACING	24.0"	JREF-	1SQF487_Z03

(5-399-MACK ROBINSON-LITTLE - A4)

Top chord 2x4 SP #2 Dense
Bot chord 2x4 SP #2 Dense
Webs 2x4 SP #3

Left end vertical not exposed to wind pressure.

Deflection meets L/360 live and L/240 total load.

110 mph wind, 11.51 ft mean hgt, ASCE 7-98, CLOSED bldg, not located within 4.50 ft from roof edge, CAT II, EXP B, wind TC DL=5.0 psf, wind BC DL=5.0 psf.

(A) Continuous lateral bracing equally spaced on member.

Shim all supports to solid bearing.

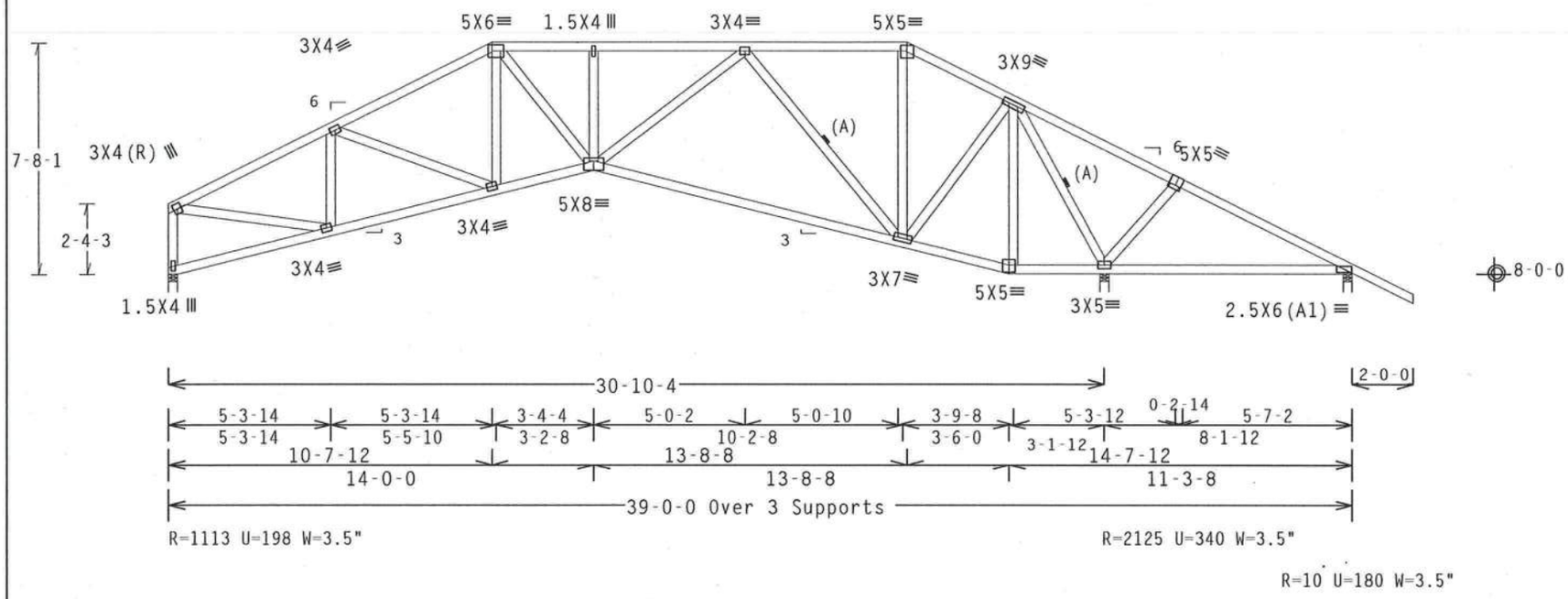

PLT TYP. Wave TPI | Design Crit: TPI-1995(STD)/FBC | 7.04.0805.16 | QTY:1 | FL/-/4/-/-/R/- | Scale =.1875"/Ft.

ALPINE
Alpine Engineered Products, Inc.
1950 Marley Drive
Haines City, FL 33844
FL Certificate of Authorization # 567

WARNING TRUSSES REQUIRE EXTREME CARE IN FABRICATION, HANDLING, SHIPPING, INSTALLING AND BRACING. REFER TO BCSI 1-03 (BUILDING COMPONENT SAFETY INFORMATION), PUBLISHED BY TPI (TRUSS PLATE INSTITUTE, 583 D'ONOFRIO DR., SUITE 200, MADISON, WI 53719) AND WTCA (WOOD TRUSS COUNCIL OF AMERICA, 6300 ENTERPRISE LN, MADISON, WI 53719) FOR SAFETY PRACTICES PRIOR TO PERFORMING THESE FUNCTIONS. UNLESS OTHERWISE INDICATED, TOP CHORD SHALL HAVE PROPERLY ATTACHED STRUCTURAL PANELS AND BOTTOM CHORD SHALL HAVE A PROPERLY ATTACHED RIGID CEILING.

IMPORTANT FURNISH A COPY OF THIS DESIGN TO THE INSTALLATION CONTRACTOR. ALPINE ENGINEERED PRODUCTS, INC. SHALL NOT BE RESPONSIBLE FOR ANY DEVIATION FROM THIS DESIGN; ANY FAILURE TO BUILD THE TRUSS IN CONFORMANCE WITH TPI; OR FABRICATING, HANDLING, SHIPPING, INSTALLING & BRACING OF TRUSSES. DESIGN CONFORMS WITH APPLICABLE PROVISIONS OF NDS (NATIONAL DESIGN SPEC, BY AF&PA) AND TPI. ALPINE CONNECTOR PLATES ARE MADE OF 20/18/16GA (W,H/S/K) ASTM A653 GRADE 40/60 (W, K/H,S) GALV. STEEL. APPLY PLATES TO EACH FACE OF TRUSS AND, UNLESS OTHERWISE LOCATED ON THIS DESIGN, POSITION PER DRAWINGS 160A-Z. ANY INSPECTION OF PLATES FOLLOWED BY (1) SHALL BE PER ANNEX A3 OF TPI1-2002 SEC.3. A SEAL ON THIS DRAWING INDICATES ACCEPTANCE OF PROFESSIONAL ENGINEERING RESPONSIBILITY SOLELY FOR THE TRUSS COMPONENT DESIGN SHOWN. THE SUITABILITY AND USE OF THIS COMPONENT FOR ANY BUILDING IS THE RESPONSIBILITY OF THE BUILDING DESIGNER PER ANSI/TPI 1 SEC. 2.

ARTHUR R. FISHER
LICENSE
No. 59687
STATE OF FLORIDA
PROFESSIONAL ENGINEER
Sep 12 '05

TC LL	20.0 PSF	REF	R487-- 88063
TC DL	10.0 PSF	DATE	09/12/05
BC DL	10.0 PSF	DRW	HCUSR487 05255095
BC LL	0.0 PSF	HC-ENG	DF/AF
TOT.LD.	40.0 PSF	SEQN-	31932
DUR.FAC.	1.25	FROM	JP
SPACING	24.0"	JREF-	1SQF487_Z03

(5-399-MACK ROBINSON-LITTLE - A5)

Top chord 2x4 SP #2 Dense
Bot chord 2x4 SP #2 Dense
Webs 2x4 SP #3

Left end vertical not exposed to wind pressure.

Deflection meets L/360 live and L/240 total load.

110 mph wind, 12.01 ft mean hgt, ASCE 7-98, CLOSED bldg, not located within 4.50 ft from roof edge, CAT II, EXP B, wind TC DL=5.0 psf, wind BC DL=5.0 psf.

(A) Continuous lateral bracing equally spaced on member.

Shim all supports to solid bearing.

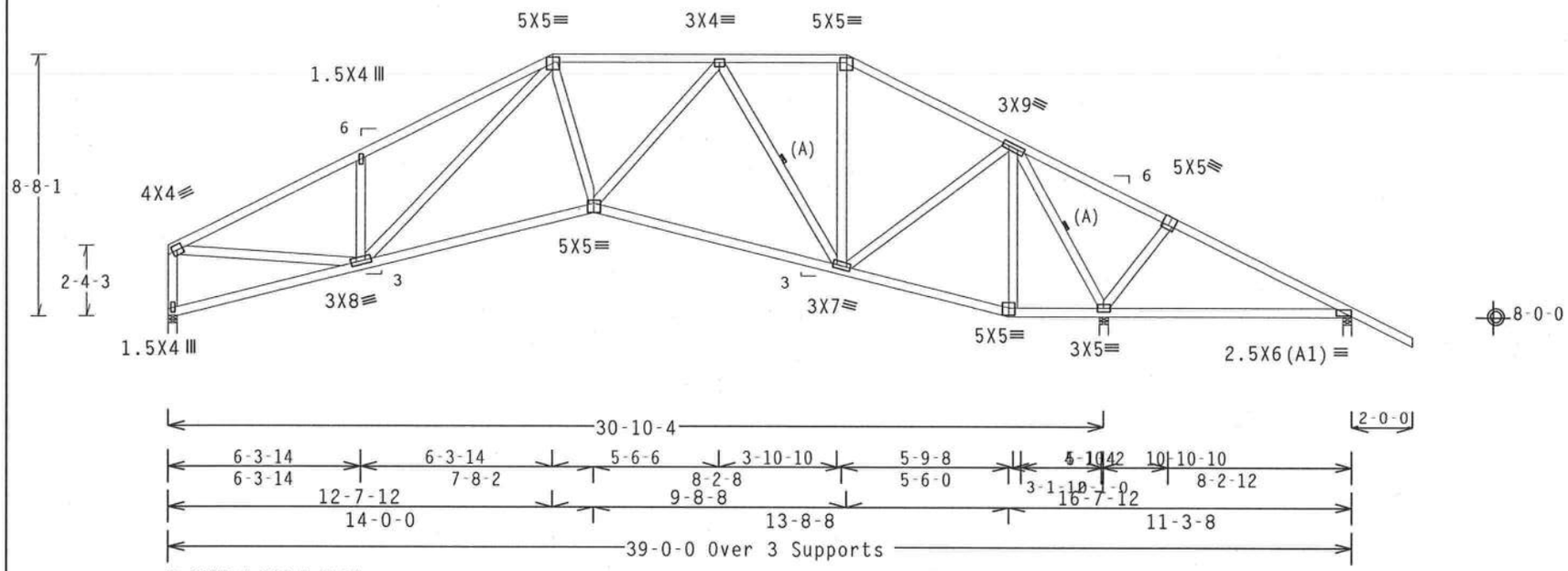

PLT TYP. Wave TPI | Design Crit: TPI-1995(STD)/FBC | 7.04.0805 | QTY:4 | FL/-/4/-/-/R/- | Scale =.1875"/Ft.

ALPINE

Alpine Engineered Products, Inc.
1950 Marley Drive
Haines City, FL 33844
FL Certificate of Authorization # 567

WARNING TRUSSES REQUIRE EXTREME CARE IN FABRICATION, HANDLING, SHIPPING, INSTALLING AND BRACING. REFER TO BCSI 1-03 (BUILDING COMPONENT SAFETY INFORMATION), PUBLISHED BY TPI (TRUSS PLATE INSTITUTE, 583 D'ONOFRIO DR., SUITE 200, MADISON, WI 53719) AND WTCA (WOOD TRUSS COUNCIL OF AMERICA, 6300 ENTERPRISE LN, MADISON, WI 53719) FOR SAFETY PRACTICES PRIOR TO PERFORMING THESE FUNCTIONS. UNLESS OTHERWISE INDICATED, TOP CHORD SHALL HAVE PROPERLY ATTACHED STRUCTURAL PANELS AND BOTTOM CHORD SHALL HAVE A PROPERLY ATTACHED RIGID CEILING.

IMPORTANT FURNISH A COPY OF THIS DESIGN TO THE INSTALLATION CONTRACTOR. ALPINE ENGINEERED PRODUCTS, INC. SHALL NOT BE RESPONSIBLE FOR ANY DEVIATION FROM THIS DESIGN; ANY FAILURE TO BUILD THE TRUSS IN CONFORMANCE WITH TPI; OR FABRICATING, HANDLING, SHIPPING, INSTALLING & BRACING OF TRUSSES. DESIGN CONFORMS WITH APPLICABLE PROVISIONS OF NDS (NATIONAL DESIGN SPEC, BY AF&PA) AND TPI. ALPINE CONNECTOR PLATES ARE MADE OF 20/18/16GA (W,H/S/K) ASTM A653 GRADE 40/60 (W. K/H.S) GALV. STEEL. APPLY PLATES TO EACH FACE OF TRUSS AND, UNLESS OTHERWISE LOCATED ON THIS DESIGN, POSITION PER DRAWINGS 160A-Z. ANY INSPECTION OF PLATES FOLLOWED BY (1) SHALL BE PER ANNEX A3 OF TPI1-2002 SEC.3. A SEAL ON THIS DRAWING INDICATES ACCEPTANCE OF PROFESSIONAL ENGINEERING RESPONSIBILITY SOLELY FOR THE TRUSS COMPONENT DESIGN SHOWN. THE SUITABILITY AND USE OF THIS COMPONENT FOR ANY BUILDING IS THE RESPONSIBILITY OF THE BUILDING DESIGNER PER ANSI/TPI 1 SEC. 2.

ARTHUR R. FISHER LICENSE No. 59687 STATE OF FLORIDA PROFESSIONAL ENGINEER

Sep 12 '05

TC LL	20.0 PSF	REF	R487-- 88064
TC DL	10.0 PSF	DATE	09/12/05
BC DL	10.0 PSF	DRW	HCUSR487 05255096
BC LL	0.0 PSF	HC-ENG	DF/AF
TOT.LD.	40.0 PSF	SEQN-	31944
DUR.FAC.	1.25	FROM	JP
SPACING	24.0"	JREF-	1SQF487_Z03

(5-399-MACK ROBINSON-LITTLE - A6)

Top chord 2x4 SP #2 Dense
Bot chord 2x4 SP #2 Dense
Webs 2x4 SP #3

Left end vertical not exposed to wind pressure.

Deflection meets L/360 live and L/240 total load.

110 mph wind, 12.01 ft mean hgt, ASCE 7-98, CLOSED bldg, not located within 4.50 ft from roof edge, CAT II, EXP B, wind TC DL=5.0 psf, wind BC DL=5.0 psf.

(A) Continuous lateral bracing equally spaced on member.

Shim all supports to solid bearing.

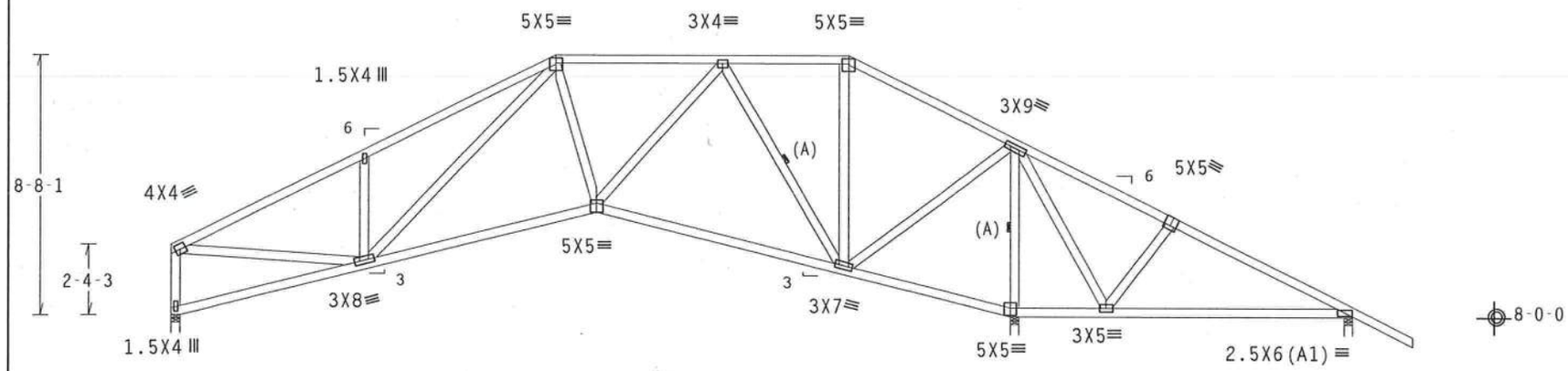

PLT TYP. Wave TPI | Design Crit: TPI-1995(STD)/FBC | 7.04.0805 | QTY:4 | FL/-/4/-/-/R/- | Scale =.1875"/Ft.

ALPINE

Alpine Engineered Products, Inc
1950 Marley Drive
Haines City, FL 33844
FL Certificate of Authorization # 567

WARNING TRUSSES REQUIRE EXTREME CARE IN FABRICATION, HANDLING, SHIPPING, INSTALLING AND BRACING. REFER TO BCSI 1-03 (BUILDING COMPONENT SAFETY INFORMATION), PUBLISHED BY TPI (TRUSS PLATE INSTITUTE, 583 D'ONOFRIO DR., SUITE 200, MADISON, WI 53719) AND WTCA (WOOD TRUSS COUNCIL OF AMERICA, 6300 ENTERPRISE LN, MADISON, WI 53719) FOR SAFETY PRACTICES PRIOR TO PERFORMING THESE FUNCTIONS. UNLESS OTHERWISE INDICATED, TOP CHORD SHALL HAVE PROPERLY ATTACHED STRUCTURAL PANELS AND BOTTOM CHORD SHALL HAVE A PROPERLY ATTACHED RIGID CEILING.

IMPORTANT FURNISH A COPY OF THIS DESIGN TO THE INSTALLATION CONTRACTOR. ALPINE ENGINEERED PRODUCTS, INC. SHALL NOT BE RESPONSIBLE FOR ANY DEVIATION FROM THIS DESIGN; ANY FAILURE TO BUILD THE TRUSS IN CONFORMANCE WITH TPI; OR FABRICATING, HANDLING, SHIPPING, INSTALLING & BRACING OF TRUSSES. DESIGN CONFORMS WITH APPLICABLE PROVISIONS OF NDS (NATIONAL DESIGN SPEC. BY AF&PA) AND TPI. ALPINE CONNECTOR PLATES ARE MADE OF 20/18/16GA (W,H/S/K) ASTM A653 GRADE 40/60 (W, K/H,S) GALV. STEEL. APPLY PLATES TO EACH FACE OF TRUSS AND, UNLESS OTHERWISE LOCATED ON THIS DESIGN, POSITION PER DRAWINGS 160A-Z. ANY INSPECTION OF PLATES FOLLOWED BY (I) SHALL BE PER ANNEX A3 OF TPI1-2002 SEC.3. A SEAL ON THIS DRAWING INDICATES ACCEPTANCE OF PROFESSIONAL ENGINEERING RESPONSIBILITY SOLELY FOR THE TRUSS COMPONENT DESIGN SHOWN. THE SUITABILITY AND USE OF THIS COMPONENT FOR ANY BUILDING IS THE RESPONSIBILITY OF THE BUILDING DESIGNER PER ANSI/TPI 1 SEC. 2.

ARTHUR R. FISHER LICENSE No. 59687 STATE OF FLORIDA PROFESSIONAL ENGINEER

Sep 12 '05

TC LL	20.0 PSF	REF	R487-- 88065
TC DL	10.0 PSF	DATE	09/12/05
BC DL	10.0 PSF	DRW	HCUSR487 05255097
BC LL	0.0 PSF	HC-ENG	DF/AF
TOT.LD.	40.0 PSF	SEQN-	31951
DUR.FAC.	1.25	FROM	JP
SPACING	24.0"	JREF-	1SQF487_Z03

(5-399-MACK ROBINSON-LITTLE - AA1)

Top chord 2x4 SP #2 Dense
Bot chord 2x4 SP #2 Dense
Webs 2x4 SP #3

#1 hip supports 7-0-0 jacks with no webs.

Deflection meets L/360 live and L/240 total load.

110 mph wind, 15.00 ft mean hgt, ASCE 7-98, CLOSED bldg, Located anywhere in roof, CAT II, EXP B, wind TC DL=5.0 psf, wind BC DL=5.0 psf.

Right end vertical not exposed to wind pressure.

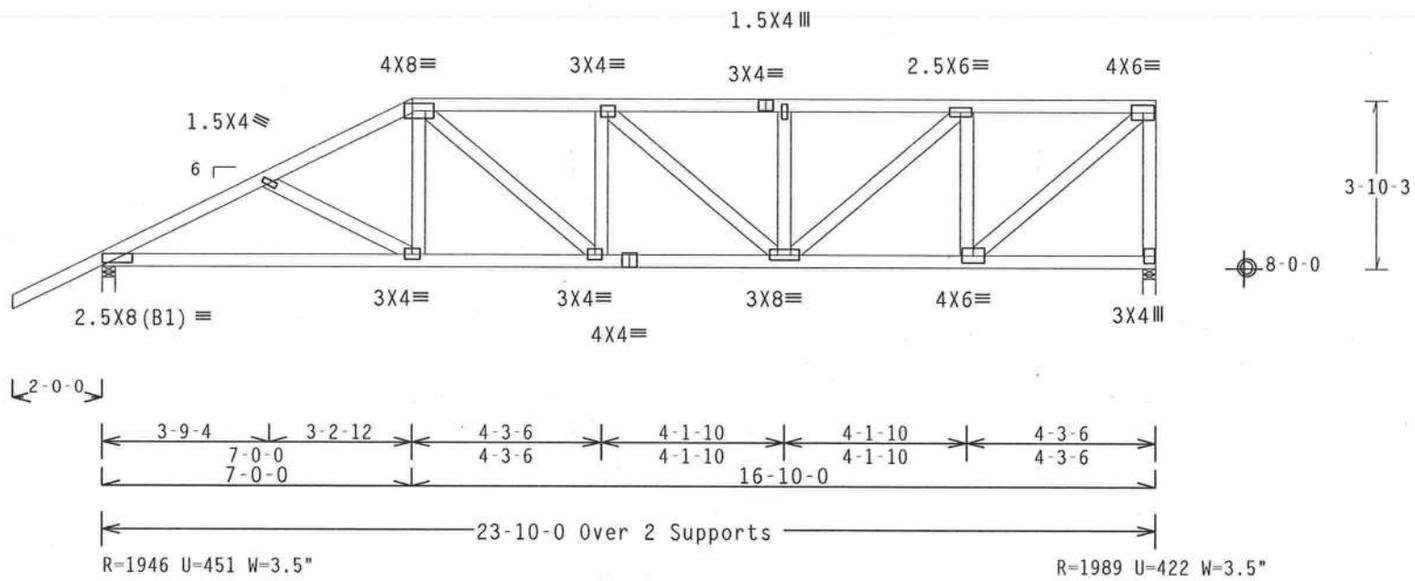

PLT TYP. Wave TPI | Design Crit: TPI-1995(STD)/FBC | 7.04.0805 | QTY:1 | FL/-/4/-/-/R/- | Scale =.25"/Ft.

ALPINE

Alpine Engineered Products, Inc
1950 Marley Drive
Haines City, FL 33844
FL Certificate of Authorization # 567

WARNING TRUSSES REQUIRE EXTREME CARE IN FABRICATION, HANDLING, SHIPPING, INSTALLING AND BRACING. REFER TO BCSI 1-03 (BUILDING COMPONENT SAFETY INFORMATION), PUBLISHED BY TPI (TRUSS PLATE INSTITUTE, 583 D'ONOFRIO DR., SUITE 200, MADISON, WI 53719) AND WTCA (WOOD TRUSS COUNCIL OF AMERICA, 6300 ENTERPRISE LN, MADISON, WI 53719) FOR SAFETY PRACTICES PRIOR TO PERFORMING THESE FUNCTIONS. UNLESS OTHERWISE INDICATED, TOP CHORD SHALL HAVE PROPERLY ATTACHED STRUCTURAL PANELS AND BOTTOM CHORD SHALL HAVE A PROPERLY ATTACHED RIGID CEILING.

IMPORTANTFURNISH A COPY OF THIS DESIGN TO THE INSTALLATION CONTRACTOR. ALPINE ENGINEERED PRODUCTS, INC. SHALL NOT BE RESPONSIBLE FOR ANY DEVIATION FROM THIS DESIGN; ANY FAILURE TO BUILD THE TRUSS IN CONFORMANCE WITH TPI; OR FABRICATING, HANDLING, SHIPPING, INSTALLING & BRACING OF TRUSSES. DESIGN CONFORMS WITH APPLICABLE PROVISIONS OF NDS (NATIONAL DESIGN SPEC, BY AF&PA) AND TPI. ALPINE CONNECTOR PLATES ARE MADE OF 20/18/16GA (W,H/S/K) ASTM A653 GRADE 40/60 (W, K/H,S) GALV. STEEL. APPLY PLATES TO EACH FACE OF TRUSS AND, UNLESS OTHERWISE LOCATED ON THIS DESIGN, POSITION PER DRAWINGS 160A-Z. ANY INSPECTION OF PLATES FOLLOWED BY (I) SHALL BE PER ANNEX A3 OF TPI1-2002 SEC.3. A SEAL ON THIS DRAWING INDICATES ACCEPTANCE OF PROFESSIONAL ENGINEERING RESPONSIBILITY SOLELY FOR THE TRUSS COMPONENT DESIGN SHOWN. THE SUITABILITY AND USE OF THIS COMPONENT FOR ANY BUILDING IS THE RESPONSIBILITY OF THE BUILDING DESIGNER PER ANSI/TPI 1 SEC. 2.

ARTHUR R. FISHER LICENSE No. 59487 STATE OF FLORIDA PROFESSIONAL ENGINEER

Sep 12 '05

TC LL	20.0 PSF	REF	R487-- 88066
TC DL	10.0 PSF	DATE	09/12/05
BC DL	10.0 PSF	DRW	HCUSR487 05255098
BC LL	0.0 PSF	HC-ENG	DF/AF
TOT.LD.	40.0 PSF	SEQN-	31732
DUR.FAC.	1.25	FROM	JP
SPACING	SEE ABOVE	JREF-	1SQF487_Z03

(5-399-MACK ROBINSON-LITTLE - AA2)

Top chord 2x4 SP #2 Dense
Bot chord 2x4 SP #2 Dense
Webs 2x4 SP #3

Deflection meets L/360 live and L/240 total load.

110 mph wind, 10.10 ft mean hgt, ASCE 7-98, CLOSED bldg, not located within 4.50 ft from roof edge, CAT II, EXP B, wind TC DL=5.0 psf, wind BC DL=5.0 psf.

Right end vertical not exposed to wind pressure.

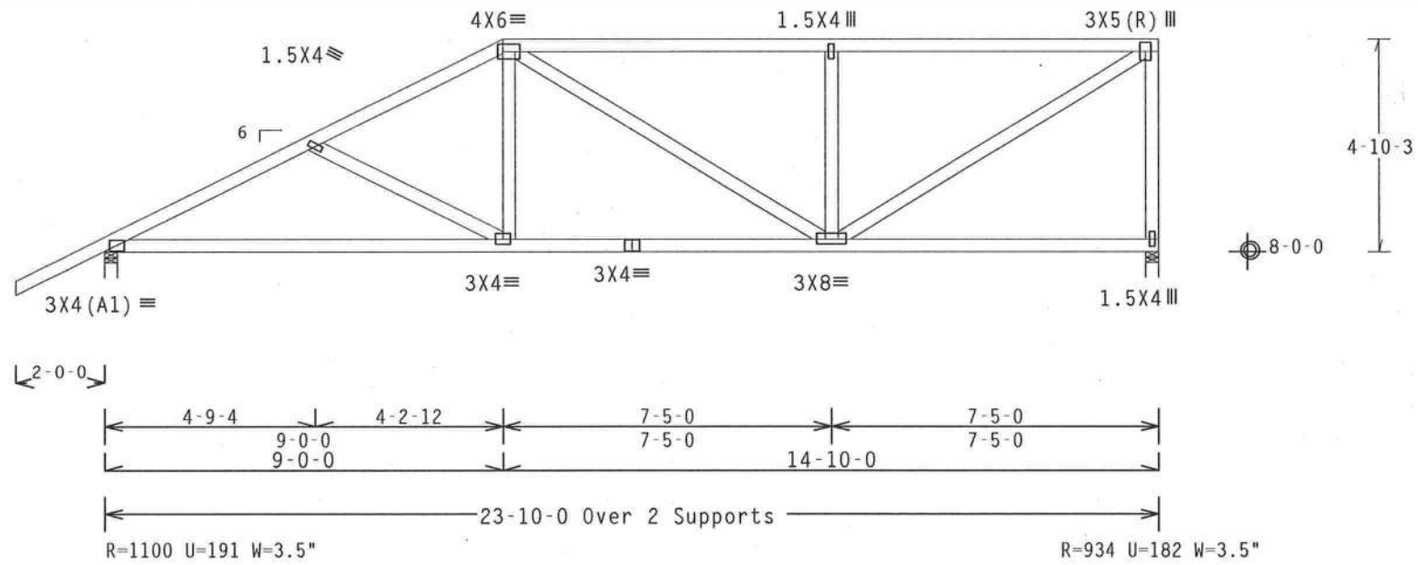

PLT TYP. Wave TPI | Design Crit: TPI-1995(STD)/FBC | 7.04.0805 | QTY:1 | FL/-/4/-/-/R/- | Scale =.25"/Ft.

ALPINE
Alpine Engineered Products, Inc
1950 Marley Drive
Haines City, FL 33844
FL Certificate of Authorization # 567

WARNING TRUSSES REQUIRE EXTREME CARE IN FABRICATION, HANDLING, SHIPPING, INSTALLING AND BRACING. REFER TO BCSI 1-03 (BUILDING COMPONENT SAFETY INFORMATION), PUBLISHED BY TPI (TRUSS PLATE INSTITUTE, 583 D'ONOFRIO DR., SUITE 200, MADISON, WI 53719) AND WTCA (WOOD TRUSS COUNCIL OF AMERICA, 6300 ENTERPRISE LN, MADISON, WI 53719) FOR SAFETY PRACTICES PRIOR TO PERFORMING THESE FUNCTIONS. UNLESS OTHERWISE INDICATED, TOP CHORD SHALL HAVE PROPERLY ATTACHED STRUCTURAL PANELS AND BOTTOM CHORD SHALL HAVE A PROPERLY ATTACHED RIGID CEILING.

IMPORTANT FURNISH A COPY OF THIS DESIGN TO THE INSTALLATION CONTRACTOR. ALPINE ENGINEERED PRODUCTS, INC. SHALL NOT BE RESPONSIBLE FOR ANY DEVIATION FROM THIS DESIGN; ANY FAILURE TO BUILD THE TRUSS IN CONFORMANCE WITH TPI; OR FABRICATING, HANDLING, SHIPPING, INSTALLING & BRACING OF TRUSSES. DESIGN CONFORMS WITH APPLICABLE PROVISIONS OF NDS (NATIONAL DESIGN SPEC, BY AF&PA) AND TPI. ALPINE CONNECTOR PLATES ARE MADE OF 20/18/16GA (W,H/S/K) ASTM A653 GRADE 40/60 (W, K/H,S) GALV. STEEL. APPLY PLATES TO EACH FACE OF TRUSS AND, UNLESS OTHERWISE LOCATED ON THIS DESIGN, POSITION PER DRAWINGS 160A-Z. ANY INSPECTION OF PLATES FOLLOWED BY (1) SHALL BE PER ANNEX A3 OF TPI1-2002 SEC.3. A SEAL ON THIS DRAWING INDICATES ACCEPTANCE OF PROFESSIONAL ENGINEERING RESPONSIBILITY SOLELY FOR THE TRUSS COMPONENT DESIGN SHOWN. THE SUITABILITY AND USE OF THIS COMPONENT FOR ANY BUILDING IS THE RESPONSIBILITY OF THE BUILDING DESIGNER PER ANSI/TPI 1 SEC. 2.

ARTHUR R. FISHER
LICENSE
No. 59687
STATE OF
FLORIDA
PROFESSIONAL ENGINEER
Sep 12 '05

TC LL	20.0 PSF	REF	R487-- 88067
TC DL	10.0 PSF	DATE	09/12/05
BC DL	10.0 PSF	DRW	HCUSR487 05255077
BC LL	0.0 PSF	HC-ENG	DF/AF *
TOT.LD.	40.0 PSF	SEQN-	31740
DUR.FAC.	1.25	FROM	JP
SPACING	24.0"	JREF-	1SQF487_Z03

(5-399-MACK ROBINSON-LITTLE - AA3)

Top chord 2x4 SP #2 Dense
Bot chord 2x4 SP #2 Dense
Webs 2x4 SP #3

(A) 1x4 SP #3 or better "T" brace. 80% length of web member. Attach with 8d Box or Gun (0.113"x2.5",min.)nails @ 6" OC.

110 mph wind, 10.60 ft mean hgt, ASCE 7-98, CLOSED bldg, not located within 4.50 ft from roof edge, CAT II, EXP B, wind TC DL=5.0 psf, wind BC DL=5.0 psf.

Right end vertical not exposed to wind pressure.

Deflection meets L/360 live and L/240 total load.

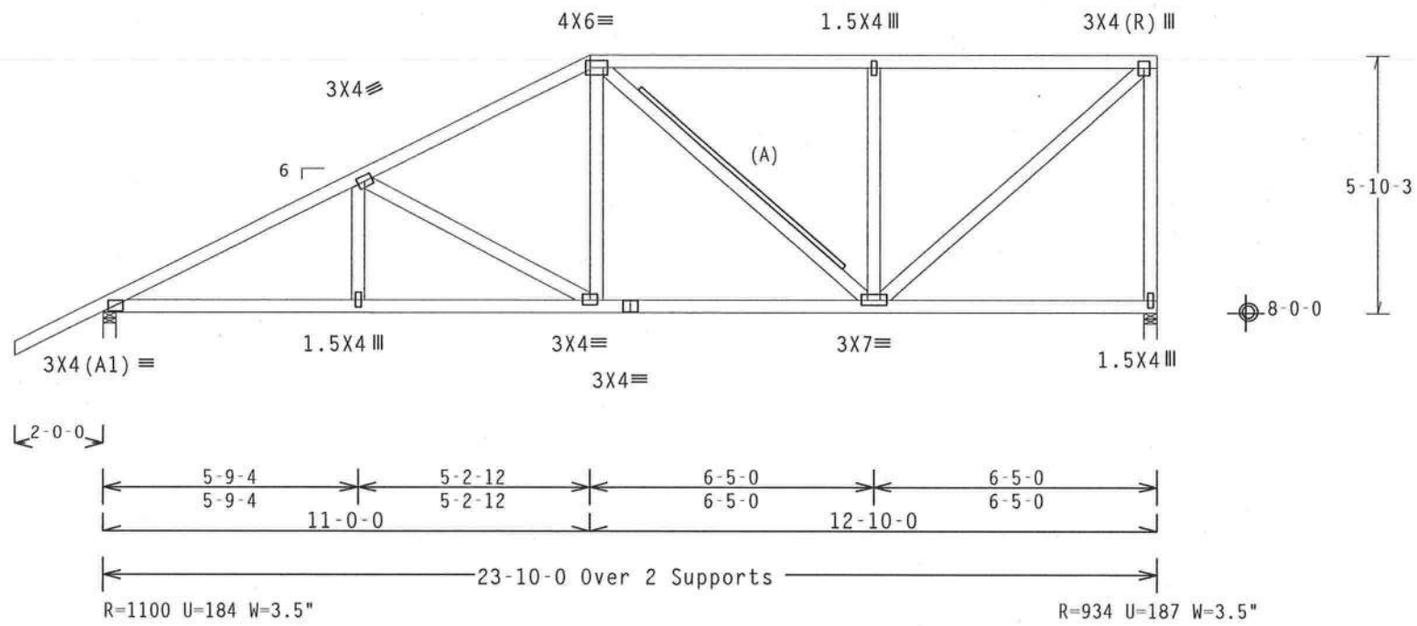

PLT TYP. Wave TPI | Design Crit: TPI-1995(STD)/FBC | 7.04.0805 | QTY:1 | FL/-/4/-/-/R/- | Scale =.25"/Ft.

ALPINE
Alpine Engineered Products, Inc.
1950 Marley Drive
Haines City, FL 33844
FL Certificate of Authorization # 567

WARNING TRUSSES REQUIRE EXTREME CARE IN FABRICATION, HANDLING, SHIPPING, INSTALLING AND BRACING. REFER TO BCSI 1-03 (BUILDING COMPONENT SAFETY INFORMATION), PUBLISHED BY TPI (TRUSS PLATE INSTITUTE, 583 D'ONOFRIO DR., SUITE 200, MADISON, WI 53719) AND WTCA (WOOD TRUSS COUNCIL OF AMERICA, 6300 ENTERPRISE LN, MADISON, WI 53719) FOR SAFETY PRACTICES PRIOR TO PERFORMING THESE FUNCTIONS. UNLESS OTHERWISE INDICATED, TOP CHORD SHALL HAVE PROPERLY ATTACHED STRUCTURAL PANELS AND BOTTOM CHORD SHALL HAVE A PROPERLY ATTACHED RIGID CEILING.

IMPORTANT FURNISH A COPY OF THIS DESIGN TO THE INSTALLATION CONTRACTOR. ALPINE ENGINEERED PRODUCTS, INC. SHALL NOT BE RESPONSIBLE FOR ANY DEVIATION FROM THIS DESIGN; ANY FAILURE TO BUILD THE TRUSS IN CONFORMANCE WITH TPI; OR FABRICATING, HANDLING, SHIPPING, INSTALLING & BRACING OF TRUSSES. DESIGN CONFORMS WITH APPLICABLE PROVISIONS OF NDS (NATIONAL DESIGN SPEC, BY AF&PA) AND TPI. ALPINE CONNECTOR PLATES ARE MADE OF ZO/18/16GA (W,H/S/K) ASTM A653 GRADE 40/60 (W, K/H,S) GALV. STEEL. APPLY PLATES TO EACH FACE OF TRUSS AND, UNLESS OTHERWISE LOCATED ON THIS DESIGN, POSITION PER DRAWINGS 160A-Z. ANY INSPECTION OF PLATES FOLLOWED BY (1) SHALL BE PER ANNEX A3 OF TPI1-2002 SEC.3. A SEAL ON THIS DRAWING INDICATES ACCEPTANCE OF PROFESSIONAL ENGINEERING RESPONSIBILITY SOLELY FOR THE TRUSS COMPONENT DESIGN SHOWN. THE SUITABILITY AND USE OF THIS COMPONENT FOR ANY BUILDING IS THE RESPONSIBILITY OF THE BUILDING DESIGNER PER ANSI/TPI 1 SEC. 2.

ARTHUR R. FISHER LICENSE No 59997 STATE OF FLORIDA PROFESSIONAL ENGINEER
Sep 12 '05

TC LL	20.0 PSF	REF	R487-- 88068
TC DL	10.0 PSF	DATE	09/12/05
BC DL	10.0 PSF	DRW	HCUSR487 05255078
BC LL	0.0 PSF	HC-ENG	DF/AF *
TOT.LD.	40.0 PSF	SEQN-	31749
DUR.FAC.	1.25	FROM	JP
SPACING	24.0"	JREF-	1SQF487_Z03

(5-399-MACK ROBINSON-LITTLE - AA4)

Top chord 2x4 SP #2 Dense
Bot chord 2x4 SP #2 Dense
Webs 2x4 SP #3

Deflection meets L/360 live and L/240 total load.

110 mph wind, 11.10 ft mean hgt, ASCE 7-98, CLOSED bldg, not located within 4.50 ft from roof edge, CAT II, EXP B, wind TC DL=5.0 psf, wind BC DL=5.0 psf.

Right end vertical not exposed to wind pressure.

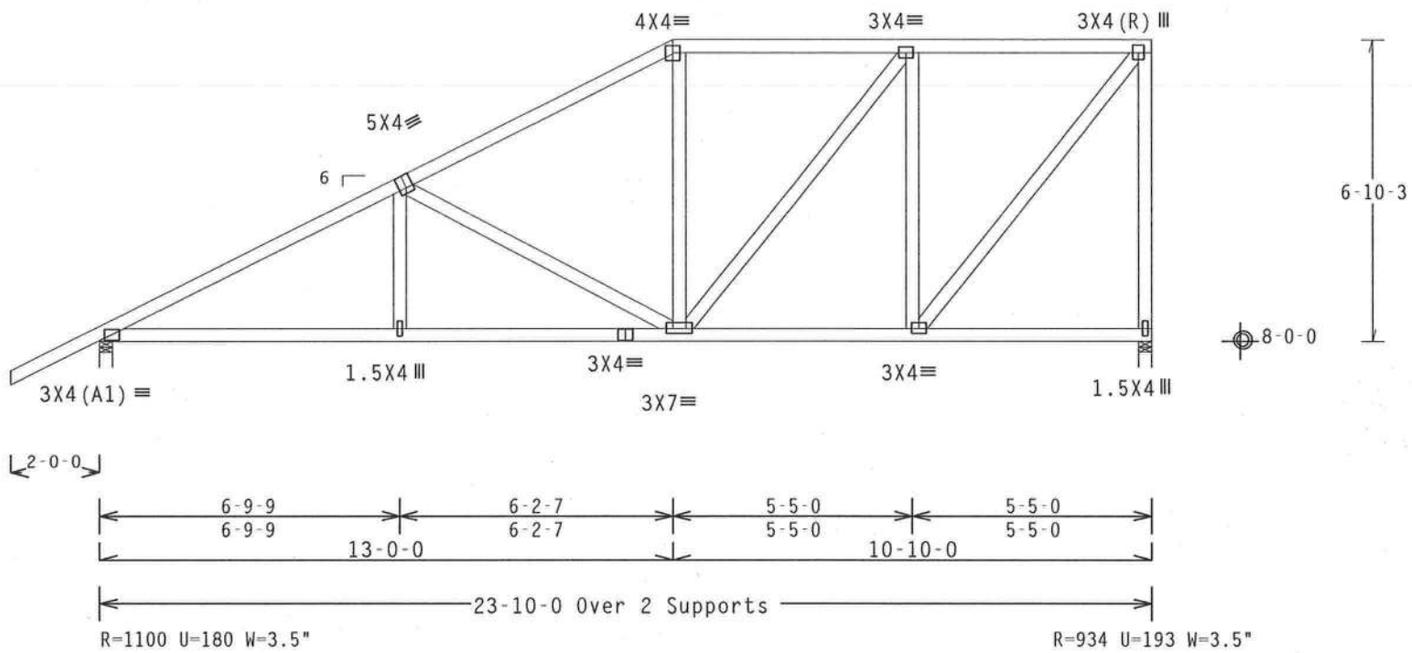

PLT TYP. Wave TPI | Design Crit: TPI-1995(STD)/FBC | 7.04.0805.16 | QTY:1 | FL/-/4/-/-/R/- | Scale =.25"/Ft.

ALPINE
Alpine Engineered Products, Inc
1950 Marley Drive
Haines City, FL 33844
FL Certificate of Authorization # 567

WARNING TRUSSES REQUIRE EXTREME CARE IN FABRICATION, HANDLING, SHIPPING, INSTALLING AND BRACING. REFER TO BCSI 1-03 (BUILDING COMPONENT SAFETY INFORMATION), PUBLISHED BY TPI (TRUSS PLATE INSTITUTE, 583 D'ONOFRIO DR., SUITE 200, MADISON, WI 53719) AND WTCA (WOOD TRUSS COUNCIL OF AMERICA, 6300 ENTERPRISE LN, MADISON, WI 53719) FOR SAFETY PRACTICES PRIOR TO PERFORMING THESE FUNCTIONS. UNLESS OTHERWISE INDICATED, TOP CHORD SHALL HAVE PROPERLY ATTACHED STRUCTURAL PANELS AND BOTTOM CHORD SHALL HAVE A PROPERLY ATTACHED RIGID CEILING.

IMPORTANT FURNISH A COPY OF THIS DESIGN TO THE INSTALLATION CONTRACTOR. ALPINE ENGINEERED PRODUCTS, INC. SHALL NOT BE RESPONSIBLE FOR ANY DEVIATION FROM THIS DESIGN; ANY FAILURE TO BUILD THE TRUSS IN CONFORMANCE WITH TPI; OR FABRICATING, HANDLING, SHIPPING, INSTALLING & BRACING OF TRUSSES. DESIGN CONFORMS WITH APPLICABLE PROVISIONS OF NDS (NATIONAL DESIGN SPEC, BY AF&PA) AND TPI. ALPINE CONNECTOR PLATES ARE MADE OF 20/18/16GA (W,H/S/K) ASTM A653 GRADE 40/60 (W, K/H,S) GALV. STEEL. APPLY PLATES TO EACH FACE OF TRUSS AND, UNLESS OTHERWISE LOCATED ON THIS DESIGN, POSITION PER DRAWINGS 160A-Z. ANY INSPECTION OF PLATES FOLLOWED BY (1) SHALL BE PER ANNEX A3 OF TPI1-2002 SEC.3. A SEAL ON THIS DRAWING INDICATES ACCEPTANCE OF PROFESSIONAL ENGINEERING RESPONSIBILITY SOLELY FOR THE TRUSS COMPONENT DESIGN SHOWN. THE SUITABILITY AND USE OF THIS COMPONENT FOR ANY BUILDING IS THE RESPONSIBILITY OF THE BUILDING DESIGNER PER ANSI/TPI 1 SEC. 2.

ARTHUR R. FISHER
LICENSE
No. 59687
STATE OF
FLORIDA
PROFESSIONAL ENGINEER
Sep 12 '05

TC LL	20.0 PSF	REF	R487-- 88069
TC DL	10.0 PSF	DATE	09/12/05
BC DL	10.0 PSF	DRW	HCUSR487 05255079
BC LL	0.0 PSF	HC-ENG	DF/AF *
TOT.LD.	40.0 PSF	SEQN-	31768
DUR.FAC.	1.25	FROM	JP
SPACING	24.0"	JREF-	1SQF487_Z03

(5-399-MACK ROBINSON-LITTLE - AA5)

Top chord 2x4 SP #2 Dense
Bot chord 2x4 SP #2 Dense
Webs 2x4 SP #3

(A) 1x4 SP #3 or better "T" brace. 80% length of web member. Attach with 8d Box or Gun (0.113"x2.5",min.)nails @ 6" OC.

110 mph wind, 11.60 ft mean hgt, ASCE 7-98, CLOSED bldg, not located within 4.50 ft from roof edge, CAT II, EXP B, wind TC DL=5.0 psf, wind BC DL=5.0 psf.

Right end vertical not exposed to wind pressure.

Deflection meets L/360 live and L/240 total load.

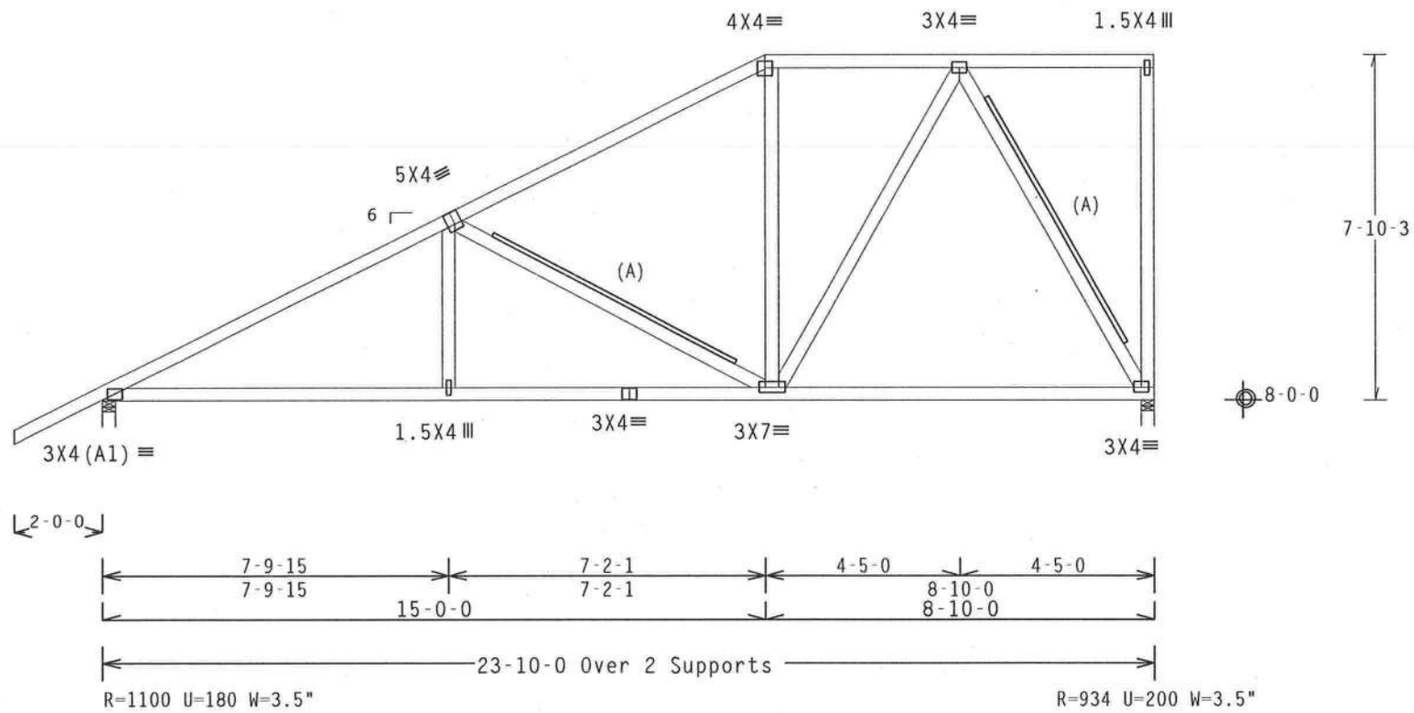

PLT TYP. Wave TPI | Design Crit: TPI-1995(STD)/FBC | 7.04.0805 | QTY:1 | FL/-/4/-/-/R/- | Scale =.25"/Ft.

ALPINE

Alpine Engineered Products, Inc.
1950 Marley Drive
Haines City, FL 33844
FL Certificate of Authorization # 567

WARNING TRUSSES REQUIRE EXTREME CARE IN FABRICATION, HANDLING, SHIPPING, INSTALLING AND BRACING. REFER TO BCSI 1-03 (BUILDING COMPONENT SAFETY INFORMATION), PUBLISHED BY TPI (TRUSS PLATE INSTITUTE, 583 D'ONOFRIO DR., SUITE 200, MADISON, WI 53719) AND WTCA (WOOD TRUSS COUNCIL OF AMERICA, 6300 ENTERPRISE LN, MADISON, WI 53719) FOR SAFETY PRACTICES PRIOR TO PERFORMING THESE FUNCTIONS. UNLESS OTHERWISE INDICATED, TOP CHORD SHALL HAVE PROPERLY ATTACHED STRUCTURAL PANELS AND BOTTOM CHORD SHALL HAVE A PROPERLY ATTACHED RIGID CEILING.

IMPORTANT FURNISH A COPY OF THIS DESIGN TO THE INSTALLATION CONTRACTOR. ALPINE ENGINEERED PRODUCTS, INC. SHALL NOT BE RESPONSIBLE FOR ANY DEVIATION FROM THIS DESIGN; ANY FAILURE TO BUILD THE TRUSS IN CONFORMANCE WITH TPI; OR FABRICATING, HANDLING, SHIPPING, INSTALLING & BRACING OF TRUSSES. DESIGN CONFORMS WITH APPLICABLE PROVISIONS OF NDS (NATIONAL DESIGN SPEC. BY AF&PA) AND TPI. ALPINE CONNECTOR PLATES ARE MADE OF 20/18/16GA (W,H/S/K) ASTM A653 GRADE 40/60 (W, K/H,S) GALV. STEEL. APPLY PLATES TO EACH FACE OF TRUSS AND, UNLESS OTHERWISE LOCATED ON THIS DESIGN, POSITION PER DRAWINGS 160A-Z. ANY INSPECTION OF PLATES FOLLOWED BY (1) SHALL BE PER ANNEX A3 OF TPI1-2002 SEC.3. A SEAL ON THIS DRAWING INDICATES ACCEPTANCE OF PROFESSIONAL ENGINEERING RESPONSIBILITY SOLELY FOR THE TRUSS COMPONENT DESIGN SHOWN. THE SUITABILITY AND USE OF THIS COMPONENT FOR ANY BUILDING IS THE RESPONSIBILITY OF THE BUILDING DESIGNER PER ANSI/TPI 1 SEC. 2.

ARTHUR R. FISHER
LICENSE
No. 59687
STATE OF FLORIDA
PROFESSIONAL ENGINEER

Sep 12 '05

TC LL	20.0 PSF	REF	R487-- 88070
TC DL	10.0 PSF	DATE	09/12/05
BC DL	10.0 PSF	DRW	HCUSR487 05255080
BC LL	0.0 PSF	HC-ENG	DF/AF *
TOT.LD.	40.0 PSF	SEQN-	31777
DUR.FAC.	1.25	FROM	JP
SPACING	24.0"	JREF-	1SQF487_Z03

(5-399-MACK ROBINSON-LITTLE - AA6)

Top chord 2x4 SP #2 Dense
Bot chord 2x4 SP #2 Dense
Webs 2x4 SP #3

(A) 1x4 SP #3 or better "T" brace. 80% length of web member. Attach with 8d Box or Gun (0.113"x2.5",min.)nails @ 6" OC.

110 mph wind, 12.10 ft mean hgt, ASCE 7-98, CLOSED bldg, not located within 4.50 ft from roof edge, CAT II, EXP B, wind TC DL=5.0 psf, wind BC DL=5.0 psf.

Right end vertical not exposed to wind pressure.

Deflection meets L/360 live and L/240 total load.

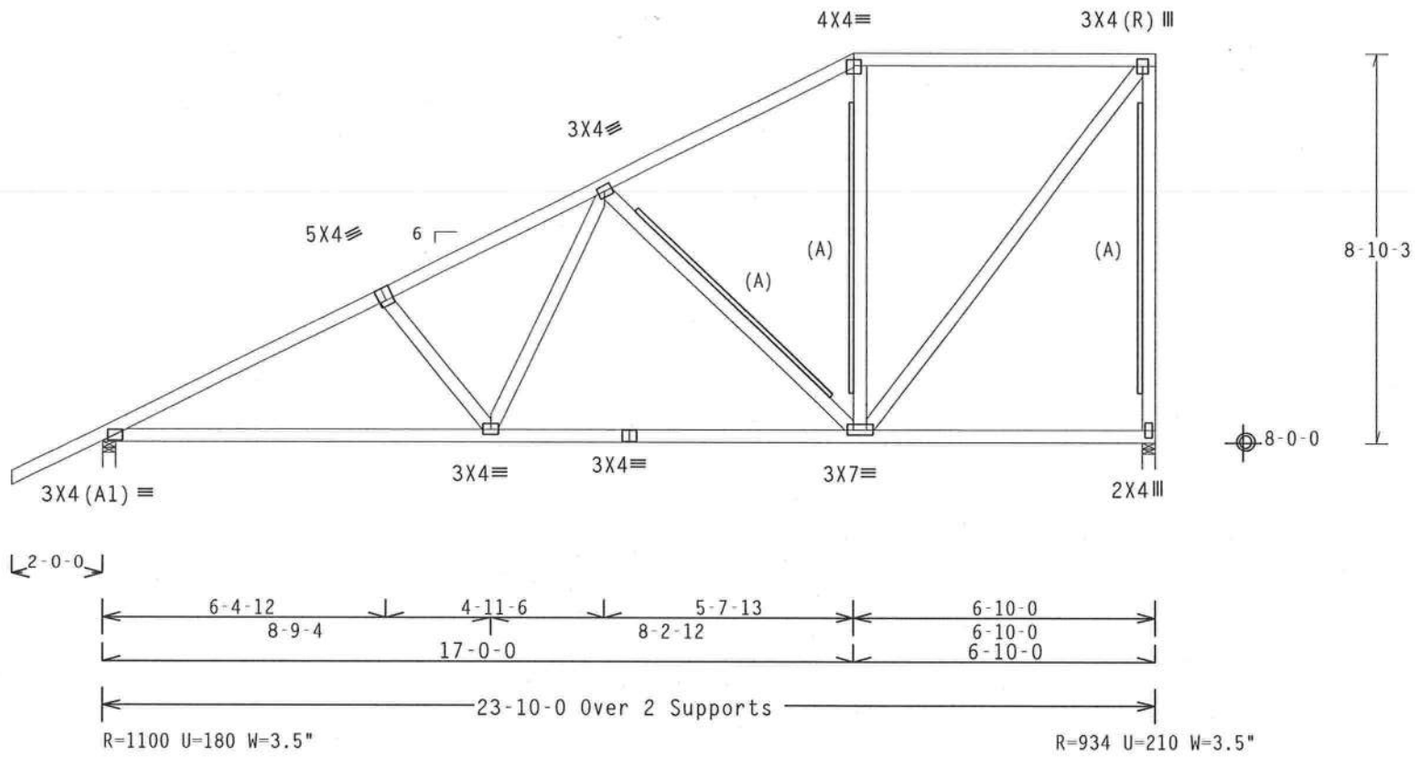

PLT TYP. Wave TPI | Design Crit: TPI-1995(STD)/FBC | 7.04.0805.16 | QTY:1 | FL/-/4/-/-/R/- | Scale =.25"/Ft.

ALPINE

Alpine Engineered Products, Inc
1950 Marley Drive
Haines City, FL 33844
FL Certificate of Authorization # 567

WARNING TRUSSES REQUIRE EXTREME CARE IN FABRICATION, HANDLING, SHIPPING, INSTALLING AND BRACING. REFER TO BCSI 1-03 (BUILDING COMPONENT SAFETY INFORMATION), PUBLISHED BY TPI (TRUSS PLATE INSTITUTE, 583 D'ONOFRIO DR., SUITE 200, MADISON, WI 53719) AND WTCA (WOOD TRUSS COUNCIL OF AMERICA, 6300 ENTERPRISE LN, MADISON, WI 53719) FOR SAFETY PRACTICES PRIOR TO PERFORMING THESE FUNCTIONS. UNLESS OTHERWISE INDICATED, TOP CHORD SHALL HAVE PROPERLY ATTACHED STRUCTURAL PANELS AND BOTTOM CHORD SHALL HAVE A PROPERLY ATTACHED RIGID CEILING.

IMPORTANT FURNISH A COPY OF THIS DESIGN TO THE INSTALLATION CONTRACTOR. ALPINE ENGINEERED PRODUCTS, INC. SHALL NOT BE RESPONSIBLE FOR ANY DEVIATION FROM THIS DESIGN; ANY FAILURE TO BUILD THE TRUSS IN CONFORMANCE WITH TPI; OR FABRICATING, HANDLING, SHIPPING, INSTALLING & BRACING OF TRUSSES. DESIGN CONFORMS WITH APPLICABLE PROVISIONS OF NDS (NATIONAL DESIGN SPEC, BY AF&PA) AND TPI. ALPINE CONNECTOR PLATES ARE MADE OF 20/18/16GA (W,H/S/K) ASTM A653 GRADE 40/60 (W, K/H,S) GALV. STEEL. APPLY PLATES TO EACH FACE OF TRUSS AND, UNLESS OTHERWISE LOCATED ON THIS DESIGN, POSITION PER DRAWINGS 160A-Z. ANY INSPECTION OF PLATES FOLLOWED BY (1) SHALL BE PER ANNEX A3 OF TPI1-2002 SEC.3. A SEAL ON THIS DRAWING INDICATES ACCEPTANCE OF PROFESSIONAL ENGINEERING RESPONSIBILITY SOLELY FOR THE TRUSS COMPONENT DESIGN SHOWN. THE SUITABILITY AND USE OF THIS COMPONENT FOR ANY BUILDING IS THE RESPONSIBILITY OF THE BUILDING DESIGNER PER ANSI/TPI 1 SEC. 2.

ARTHUR R. FISHER
LICENSE
No. 59687
STATE OF FLORIDA
PROFESSIONAL ENGINEER
Sep 12 '05

TC LL	20.0 PSF	REF R487-- 88071
TC DL	10.0 PSF	DATE 09/12/05
BC DL	10.0 PSF	DRW HCUSR487 05255081
BC LL	0.0 PSF	HC-ENG DF/AF *
TOT.LD.	40.0 PSF	SEQN- 31788
DUR.FAC.	1.25	FROM JP
SPACING	24.0"	JREF- 1SQF487_Z03

(5-399-MACK ROBINSON-LITTLE - AA7)

Top chord 2x4 SP #2 Dense
Bot chord 2x4 SP #2 Dense
Webs 2x4 SP #3

(A) 1x4 SP #3 or better "T" brace. 80% length of web member. Attach with 8d Box or Gun (0.113"x2.5",min.)nails @ 6" OC.

Deflection meets L/360 live and L/240 total load.

110 mph wind, 12.60 ft mean hgt, ASCE 7-98, CLOSED bldg, not located within 4.50 ft from roof edge, CAT II, EXP B, wind TC DL=5.0 psf, wind BC DL=5.0 psf.

Right end vertical not exposed to wind pressure.

(B) 2x4 SP #3 or better "T" brace. 80% length of web member. Attach with 16d Box or Gun (0.135"x3.5",min.)nails @ 6" OC.

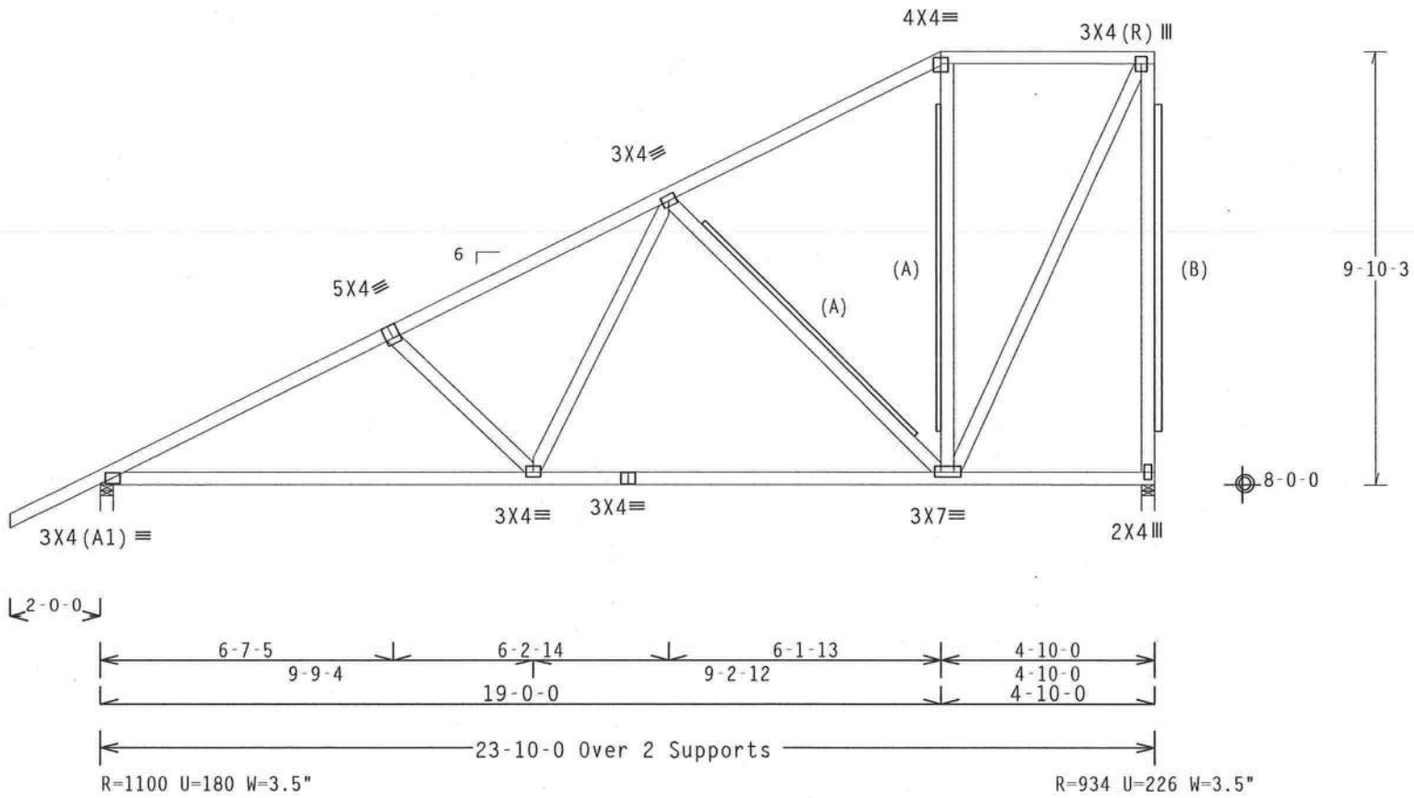

PLT TYP. Wave TPI | Design Crit: TPI-1995(STD)/FBC | 7.04.0805 | QTY:2 | FL/-/4/-/-/R/- | Scale =.25"/Ft.

ALPINE

Alpine Engineered Products, Inc
1950 Marley Drive
Haines City, FL 33844
FL Certificate of Authorization # 567

WARNING TRUSSES REQUIRE EXTREME CARE IN FABRICATION, HANDLING, SHIPPING, INSTALLING AND BRACING. REFER TO BCSI 1-03 (BUILDING COMPONENT SAFETY INFORMATION), PUBLISHED BY TPI (TRUSS PLATE INSTITUTE, 583 D'ONOFRIO DR., SUITE 200, MADISON, WI 53719) AND WTCA (WOOD TRUSS COUNCIL OF AMERICA, 6300 ENTERPRISE LN, MADISON, WI 53719) FOR SAFETY PRACTICES PRIOR TO PERFORMING THESE FUNCTIONS. UNLESS OTHERWISE INDICATED, TOP CHORD SHALL HAVE PROPERLY ATTACHED STRUCTURAL PANELS AND BOTTOM CHORD SHALL HAVE A PROPERLY ATTACHED RIGID CEILING.

IMPORTANT FURNISH A COPY OF THIS DESIGN TO THE INSTALLATION CONTRACTOR. ALPINE ENGINEERED PRODUCTS, INC. SHALL NOT BE RESPONSIBLE FOR ANY DEVIATION FROM THIS DESIGN; ANY FAILURE TO BUILD THE TRUSS IN CONFORMANCE WITH TPI; OR FABRICATING, HANDLING, SHIPPING, INSTALLING & BRACING OF TRUSSES. DESIGN CONFORMS WITH APPLICABLE PROVISIONS OF NDS (NATIONAL DESIGN SPEC. BY AF&PA) AND TPI. ALPINE CONNECTOR PLATES ARE MADE OF 20/18/16GA (W,H/S/K) ASTM A653 GRADE 40/60 (W, K/H,S) GALV. STEEL. APPLY PLATES TO EACH FACE OF TRUSS AND, UNLESS OTHERWISE LOCATED ON THIS DESIGN, POSITION PER DRAWINGS 160A-2. ANY INSPECTION OF PLATES FOLLOWED BY (1) SHALL BE PER ANNEX A3 OF TPI1-2002 SEC.3. A SEAL ON THIS DRAWING INDICATES ACCEPTANCE OF PROFESSIONAL ENGINEERING RESPONSIBILITY SOLELY FOR THE TRUSS COMPONENT DESIGN SHOWN. THE SUITABILITY AND USE OF THIS COMPONENT FOR ANY BUILDING IS THE RESPONSIBILITY OF THE BUILDING DESIGNER PER ANSI/TPI 1 SEC. 2.

ARTHUR R. FISHER LICENSE No. 59887 STATE OF FLORIDA PROFESSIONAL ENGINEER

Sep 12 '05

TC LL	20.0 PSF	REF	R487-- 88072
TC DL	10.0 PSF	DATE	09/12/05
BC DL	10.0 PSF	DRW	HCUSR487 05255082
BC LL	0.0 PSF	HC-ENG	DF/AF *
TOT.LD.	40.0 PSF	SEQN-	31797
DUR.FAC.	1.25	FROM	JP
SPACING	24.0"	JREF-	1SQF487_Z03

(5-399-MACK ROBINSON-LITTLE - B1)

Top chord 2x4 SP #2 Dense
Bot chord 2x6 SP #2
Webs 2x4 SP #3

#1 hip supports 7-0-0 jacks with no webs.

110 mph wind, 15.00 ft mean hgt, ASCE 7-98, CLOSED bldg, Located anywhere in roof, CAT II, EXP B, wind TC DL=5.0 psf, wind BC DL=5.0 psf.

Deflection meets L/360 live and L/240 total load.

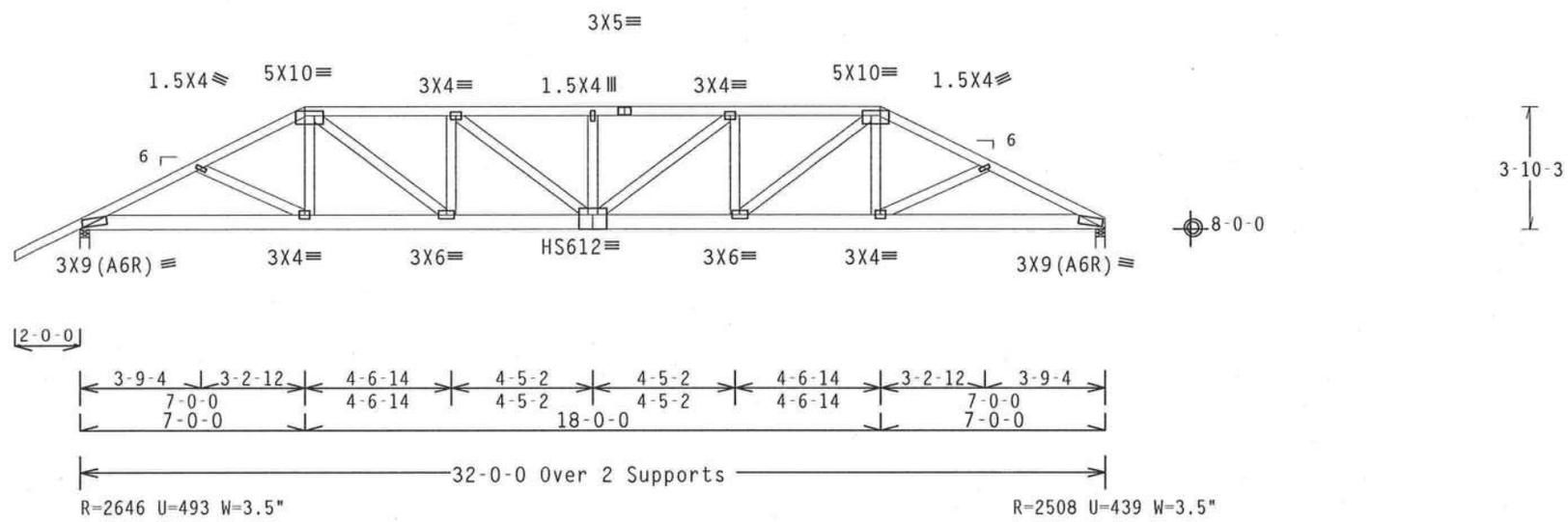

PLT TYP. 20 Gauge HS,Wave TPI Design Crit: TPI-1995(STD)/FBC 7.04.0805 QTY:1 FL/-/4/-/-/R/- Scale =.1875"/Ft.

ALPINE

Alpine Engineered Products, Inc
1950 Marley Drive
Haines City, FL 33844
FL Certificate of Authorization # 567

WARNING TRUSSES REQUIRE EXTREME CARE IN FABRICATION, HANDLING, SHIPPING, INSTALLING AND BRACING. REFER TO BCSI 1-03 (BUILDING COMPONENT SAFETY INFORMATION), PUBLISHED BY TPI (TRUSS PLATE INSTITUTE, 583 D'ONOFRIO DR., SUITE 200, MADISON, WI 53719) AND WTCA (WOOD TRUSS COUNCIL OF AMERICA, 6300 ENTERPRISE LN, MADISON, WI 53719) FOR SAFETY PRACTICES PRIOR TO PERFORMING THESE FUNCTIONS. UNLESS OTHERWISE INDICATED, TOP CHORD SHALL HAVE PROPERLY ATTACHED STRUCTURAL PANELS AND BOTTOM CHORD SHALL HAVE A PROPERLY ATTACHED RIGID CEILING.

IMPORTANTFURNISH A COPY OF THIS DESIGN TO THE INSTALLATION CONTRACTOR. ALPINE ENGINEERED PRODUCTS, INC. SHALL NOT BE RESPONSIBLE FOR ANY DEVIATION FROM THIS DESIGN; ANY FAILURE TO BUILD THE TRUSS IN CONFORMANCE WITH TPI; OR FABRICATING, HANDLING, SHIPPING, INSTALLING & BRACING OF TRUSSES. DESIGN CONFORMS WITH APPLICABLE PROVISIONS OF NDS (NATIONAL DESIGN SPEC, BY AF&PA) AND TPI. ALPINE CONNECTOR PLATES ARE MADE OF 20/18/16GA (W,H/S/K) ASTM A653 GRADE 40/60 (W, K/H,S) GALV. STEEL. APPLY PLATES TO EACH FACE OF TRUSS AND, UNLESS OTHERWISE LOCATED ON THIS DESIGN, POSITION PER DRAWINGS 160A-Z. ANY INSPECTION OF PLATES FOLLOWED BY (I) SHALL BE PER ANNEX A3 OF TPI1-2002 SEC.3. A SEAL ON THIS DRAWING INDICATES ACCEPTANCE OF PROFESSIONAL ENGINEERING RESPONSIBILITY SOLELY FOR THE TRUSS COMPONENT DESIGN SHOWN. THE SUITABILITY AND USE OF THIS COMPONENT FOR ANY BUILDING IS THE RESPONSIBILITY OF THE BUILDING DESIGNER PER ANSI/TPI 1 SEC. 2.

ARTHUR R. FISHER LICENSE No. 59687 STATE OF FLORIDA PROFESSIONAL ENGINEER

Sep 12 '05

TC LL	20.0 PSF	REF	R487-- 88073
TC DL	10.0 PSF	DATE	09/12/05
BC DL	10.0 PSF	DRW	HCUSR487 05255099
BC LL	0.0 PSF	HC-ENG	DF/AF
TOT.LD.	40.0 PSF	SEQN-	31862
DUR.FAC.	1.25	FROM	JP
SPACING	SEE ABOVE	JREF-	1SQF487_Z03

(5-399-MACK ROBINSON-LITTLE - B2)

Top chord 2x4 SP #2 Dense
Bot chord 2x4 SP #2 Dense
Webs 2x4 SP #3

Deflection meets L/360 live and L/240 total load.

110 mph wind, 10.10 ft mean hgt, ASCE 7-98, CLOSED bldg, not located within 4.50 ft from roof edge, CAT II, EXP B, wind TC DL=5.0 psf, wind BC DL=5.0 psf.

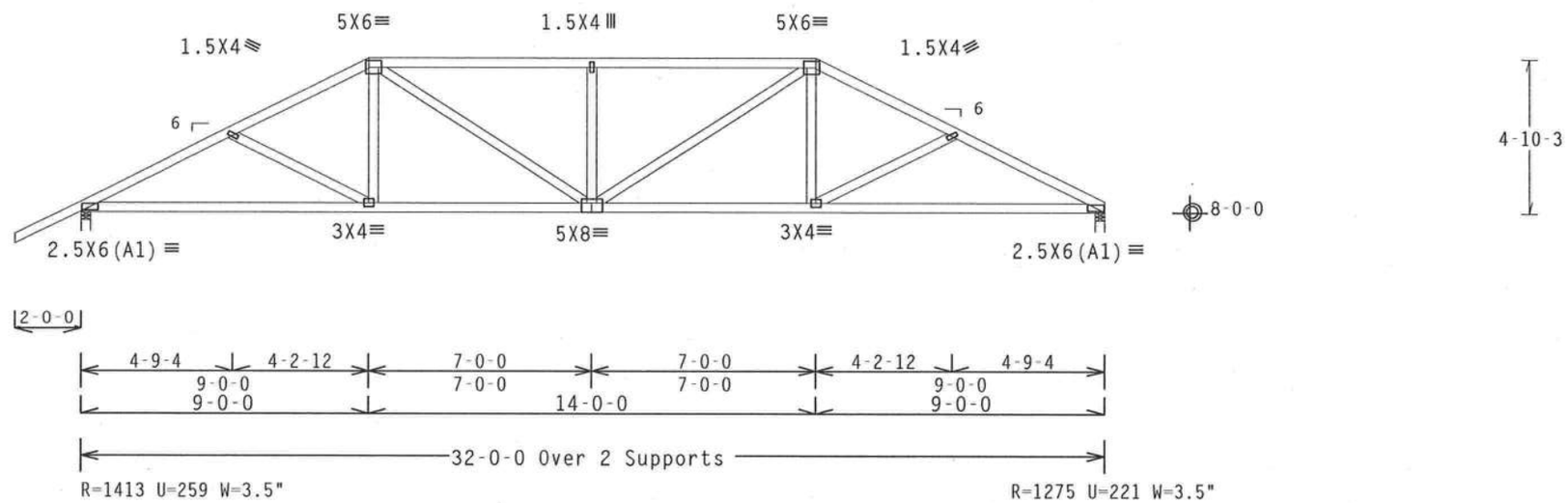

PLT TYP. Wave TPI | Design Crit: TPI-1995(STD)/FBC | 7.04.0805 | QTY:1 | FL/-/4/-/-/R/- | Scale =.1875"/Ft.

ALPINE

Alpine Engineered Products, Inc
1950 Marley Drive
Haines City, FL 33844
FL Certificate of Authorization # 567

WARNING TRUSSES REQUIRE EXTREME CARE IN FABRICATION, HANDLING, SHIPPING, INSTALLING AND BRACING. REFER TO BCSI 1-03 (BUILDING COMPONENT SAFETY INFORMATION), PUBLISHED BY TPI (TRUSS PLATE INSTITUTE, 583 D'ONOFRIO DR., SUITE 200, MADISON, WI 53719) AND WTCA (WOOD TRUSS COUNCIL OF AMERICA, 6300 ENTERPRISE LN, MADISON, WI 53719) FOR SAFETY PRACTICES PRIOR TO PERFORMING THESE FUNCTIONS. UNLESS OTHERWISE INDICATED, TOP CHORD SHALL HAVE PROPERLY ATTACHED STRUCTURAL PANELS AND BOTTOM CHORD SHALL HAVE A PROPERLY ATTACHED RIGID CEILING.

IMPORTANT FURNISH A COPY OF THIS DESIGN TO THE INSTALLATION CONTRACTOR. ALPINE ENGINEERED PRODUCTS, INC. SHALL NOT BE RESPONSIBLE FOR ANY DEVIATION FROM THIS DESIGN; ANY FAILURE TO BUILD THE TRUSS IN CONFORMANCE WITH TPI; OR FABRICATING, HANDLING, SHIPPING, INSTALLING & BRACING OF TRUSSES. DESIGN CONFORMS WITH APPLICABLE PROVISIONS OF NDS (NATIONAL DESIGN SPEC, BY AF&PA) AND TPI. ALPINE CONNECTOR PLATES ARE MADE OF 20/18/16GA (W,H/S/K) ASTM A653 GRADE 40/60 (W, K/H,S) GALV. STEEL. APPLY PLATES TO EACH FACE OF TRUSS AND, UNLESS OTHERWISE LOCATED ON THIS DESIGN, POSITION PER DRAWINGS 160A-Z. ANY INSPECTION OF PLATES FOLLOWED BY (1) SHALL BE PER ANNEX A3 OF TPI1-2002 SEC.3. A SEAL ON THIS DRAWING INDICATES ACCEPTANCE OF PROFESSIONAL ENGINEERING RESPONSIBILITY SOLELY FOR THE TRUSS COMPONENT DESIGN SHOWN. THE SUITABILITY AND USE OF THIS COMPONENT FOR ANY BUILDING IS THE RESPONSIBILITY OF THE BUILDING DESIGNER PER ANSI/TPI 1 SEC. 2.

ARTHUR A. FISHER LICENSE No.59687 STATE OF FLORIDA PROFESSIONAL ENGINEER

Sep 12 '05

TC LL	20.0 PSF	REF	R487-- 88074
TC DL	10.0 PSF	DATE	09/12/05
BC DL	10.0 PSF	DRW	HCUSR487 05255083
BC LL	0.0 PSF	HC-ENG	DF/AF *
TOT.LD.	40.0 PSF	SEQN-	31869
DUR.FAC.	1.25	FROM	JP
SPACING	24.0"	JREF-	1SQF487_Z03

(5-399-MACK ROBINSON-LITTLE - B3)

Top chord 2x4 SP #2 Dense
Bot chord 2x4 SP #2 Dense
Webs 2x4 SP #3

Deflection meets L/360 live and L/240 total load.

110 mph wind, 10.60 ft mean hgt, ASCE 7-98, CLOSED bldg, not located within 4.50 ft from roof edge, CAT II, EXP B, wind TC DL=5.0 psf, wind BC DL=5.0 psf.

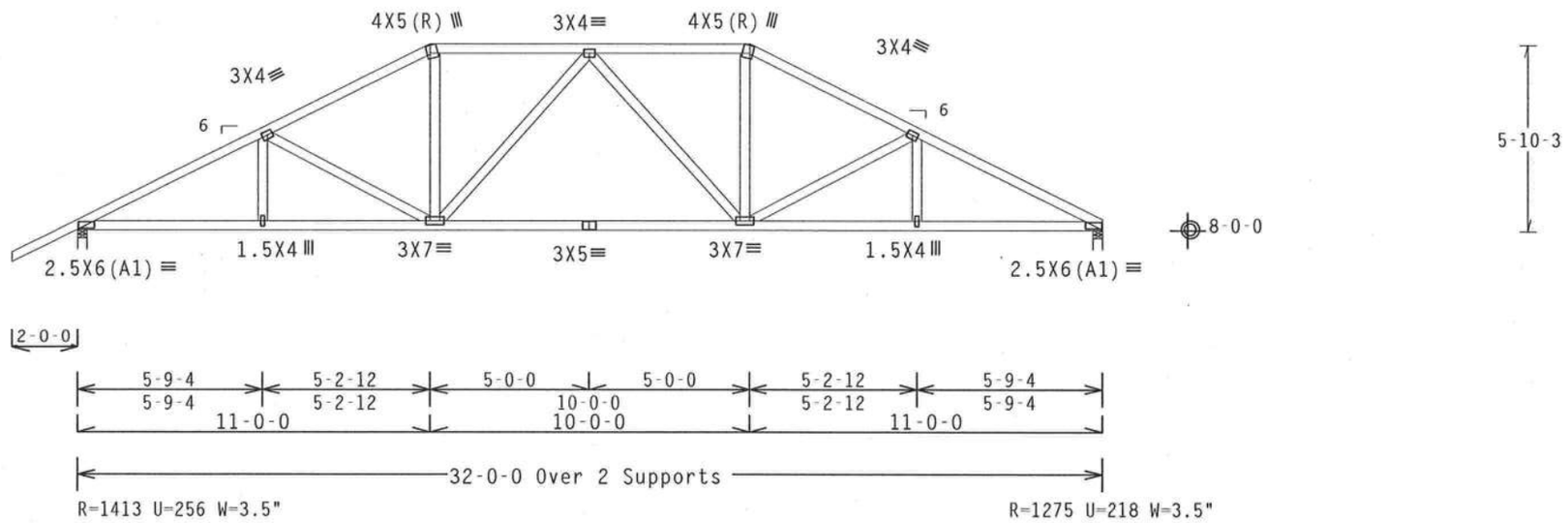

PLT TYP. Wave TPI Design Crit: TPI-1995(STD)/FBC 7.04.0805 QTY:1 FL/-/4/-/-/R/- Scale =.1875"/Ft.

ALPINE

Alpine Engineered Products, Inc
1950 Marley Drive
Haines City, FL 33844
FL Certificate of Authorization # 567

WARNING TRUSSES REQUIRE EXTREME CARE IN FABRICATION, HANDLING, SHIPPING, INSTALLING AND BRACING. REFER TO BCSI 1-03 (BUILDING COMPONENT SAFETY INFORMATION), PUBLISHED BY TPI (TRUSS PLATE INSTITUTE, 583 D'ONOFRIO DR., SUITE 200, MADISON, WI 53719) AND WTCA (WOOD TRUSS COUNCIL OF AMERICA, 6300 ENTERPRISE LN, MADISON, WI 53719) FOR SAFETY PRACTICES PRIOR TO PERFORMING THESE FUNCTIONS. UNLESS OTHERWISE INDICATED, TOP CHORD SHALL HAVE PROPERLY ATTACHED STRUCTURAL PANELS AND BOTTOM CHORD SHALL HAVE A PROPERLY ATTACHED RIGID CEILING.

IMPORTANT FURNISH A COPY OF THIS DESIGN TO THE INSTALLATION CONTRACTOR. ALPINE ENGINEERED PRODUCTS, INC. SHALL NOT BE RESPONSIBLE FOR ANY DEVIATION FROM THIS DESIGN; ANY FAILURE TO BUILD THE TRUSS IN CONFORMANCE WITH TPI; OR FABRICATING, HANDLING, SHIPPING, INSTALLING & BRACING OF TRUSSES. DESIGN CONFORMS WITH APPLICABLE PROVISIONS OF NDS (NATIONAL DESIGN SPEC, BY AF&PA) AND TPI. ALPINE CONNECTOR PLATES ARE MADE OF 20/18/16GA (W,H/S/K) ASTM A653 GRADE 40/60 (W, K/H,S) GALV. STEEL. APPLY PLATES TO EACH FACE OF TRUSS AND, UNLESS OTHERWISE LOCATED ON THIS DESIGN, POSITION PER DRAWINGS 160A-Z. ANY INSPECTION OF PLATES FOLLOWED BY (I) SHALL BE PER ANNEX A3 OF TPI1-2002 SEC.3. A SEAL ON THIS DRAWING INDICATES ACCEPTANCE OF PROFESSIONAL ENGINEERING RESPONSIBILITY SOLELY FOR THE TRUSS COMPONENT DESIGN SHOWN. THE SUITABILITY AND USE OF THIS COMPONENT FOR ANY BUILDING IS THE RESPONSIBILITY OF THE BUILDING DESIGNER PER ANSI/TPI 1 SEC. 2.

ARTHUR R. FISHER LICENSE No. 59687 STATE OF FLORIDA PROFESSIONAL ENGINEER

Sep 12 '05

TC LL	20.0 PSF	REF R487-- 88075
TC DL	10.0 PSF	DATE 09/12/05
BC DL	10.0 PSF	DRW HCUSR487 05255084
BC LL	0.0 PSF	HC-ENG DF/AF *
TOT.LD.	40.0 PSF	SEQN- 31877
DUR.FAC.	1.25	FROM JP
SPACING	24.0"	JREF- 1SQF487_Z03

(5-399-MACK ROBINSON-LITTLE - C1-GE)

Top chord 2x4 SP #2 Dense
Bot chord 2x4 SP #2 Dense
Webs 2x4 SP #3

SPECIAL LOADS
------(LUMBER DUR.FAC.=1.25 / PLATE DUR.FAC.=1.25)
TC - From 81 PLF at -2.00 to 81 PLF at 24.50
BC - From 4 PLF at -2.00 to 4 PLF at 0.00
BC - From 20 PLF at 0.00 to 20 PLF at 22.50

THE BUILDING DESIGNER IS RESPONSIBLE FOR THE DESIGN OF THE ROOF AND CEILING DIAPHRAGMS, GABLE END SHEAR WALLS, AND SUPPORTING SHEAR WALLS. SHEAR WALLS MUST PROVIDE CONTINUOUS LATERAL RESTRAINT TO THE GABLE END. ALL CONNECTIONS TO BE DESIGNED BY THE BUILDING DESIGNER.

110 mph wind, 10.50 ft mean hgt, ASCE 7-98, CLOSED bldg, Located anywhere in roof, CAT II, EXP B, wind TC DL=5.0 psf, wind BC DL=5.0 psf.

See DWGS A11015EC1103 & GBLLETIN0405 for more requirements.

Deflection meets L/360 live and L/240 total load.

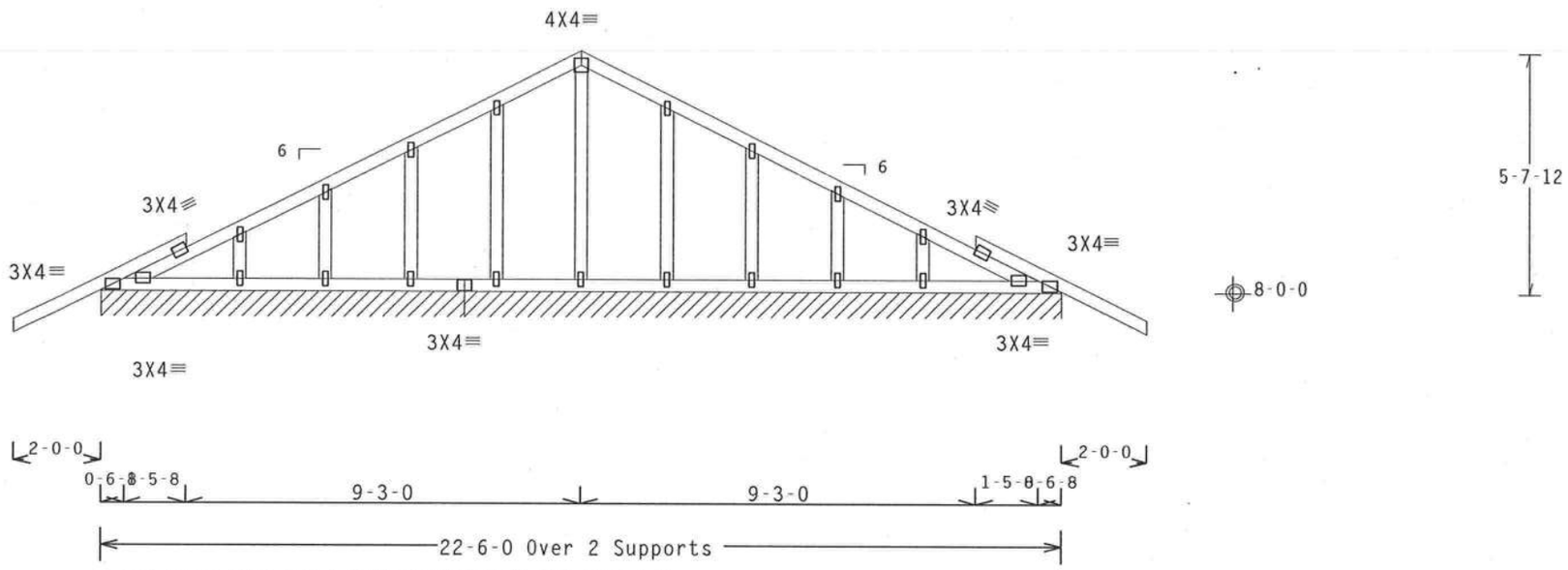

Note: All Plates Are 1.5X4 Except As Shown.

PLT TYP. Wave TPI | Design Crit: TPI-1995(STD)/FBC | 7.04.0805 | QTY:1 | FL/-/4/-/-/R/- | Scale =.25"/Ft.

ALPINE
Alpine Engineered Products, Inc
1950 Marley Drive
Haines City, FL 33844
FL Certificate of Authorization # 567

WARNING TRUSSES REQUIRE EXTREME CARE IN FABRICATION, HANDLING, SHIPPING, INSTALLING AND BRACING. REFER TO BCSI 1-03 (BUILDING COMPONENT SAFETY INFORMATION), PUBLISHED BY TPI (TRUSS PLATE INSTITUTE, 583 D'ONOFRIO DR., SUITE 200, MADISON, WI 53719) AND WTCA (WOOD TRUSS COUNCIL OF AMERICA, 6300 ENTERPRISE LN, MADISON, WI 53719) FOR SAFETY PRACTICES PRIOR TO PERFORMING THESE FUNCTIONS. UNLESS OTHERWISE INDICATED, TOP CHORD SHALL HAVE PROPERLY ATTACHED STRUCTURAL PANELS AND BOTTOM CHORD SHALL HAVE A PROPERLY ATTACHED RIGID CEILING.

IMPORTANT FURNISH A COPY OF THIS DESIGN TO THE INSTALLATION CONTRACTOR. ALPINE ENGINEERED PRODUCTS, INC. SHALL NOT BE RESPONSIBLE FOR ANY DEVIATION FROM THIS DESIGN; ANY FAILURE TO BUILD THE TRUSS IN CONFORMANCE WITH TPI; OR FABRICATING, HANDLING, SHIPPING, INSTALLING & BRACING OF TRUSSES. DESIGN CONFORMS WITH APPLICABLE PROVISIONS OF NDS (NATIONAL DESIGN SPEC. BY AF&PA) AND TPI. ALPINE CONNECTOR PLATES ARE MADE OF 20/18/16GA (W,H/S/K) ASTM A653 GRADE 40/60 (W, K/H,S) GALV. STEEL. APPLY PLATES TO EACH FACE OF TRUSS AND, UNLESS OTHERWISE LOCATED ON THIS DESIGN, POSITION PER DRAWINGS 160A-Z. ANY INSPECTION OF PLATES FOLLOWED BY (1) SHALL BE PER ANNEX A3 OF TPI1-2002 SEC.3. A SEAL ON THIS DRAWING INDICATES ACCEPTANCE OF PROFESSIONAL ENGINEERING RESPONSIBILITY SOLELY FOR THE TRUSS COMPONENT DESIGN SHOWN. THE SUITABILITY AND USE OF THIS COMPONENT FOR ANY BUILDING IS THE RESPONSIBILITY OF THE BUILDING DESIGNER PER ANSI/TPI 1 SEC. 2.

ARTHUR R. FISHER LICENSE No. 59687 STATE OF FLORIDA PROFESSIONAL ENGINEER
Sep 12 '05

TC LL	20.0 PSF	REF	R487-- 88076
TC DL	10.0 PSF	DATE	09/12/05
BC DL	10.0 PSF	DRW	HCUSR487 05255100
BC LL	0.0 PSF	HC-ENG	DF/AF
TOT.LD.	40.0 PSF	SEQN-	31815
DUR.FAC.	1.25	FROM	JP
SPACING	SEE ABOVE	JREF-	1SQF487_Z03

(5-399-MACK ROBINSON-LITTLE - C2)

Top chord 2x4 SP #2 Dense
Bot chord 2x4 SP #2 Dense
Webs 2x4 SP #3

Deflection meets L/360 live and L/240 total load.

110 mph wind, 10.66 ft mean hgt, ASCE 7-98, CLOSED bldg, Located anywhere in roof, CAT II, EXP B, wind TC DL=5.0 psf, wind BC DL=5.0 psf.

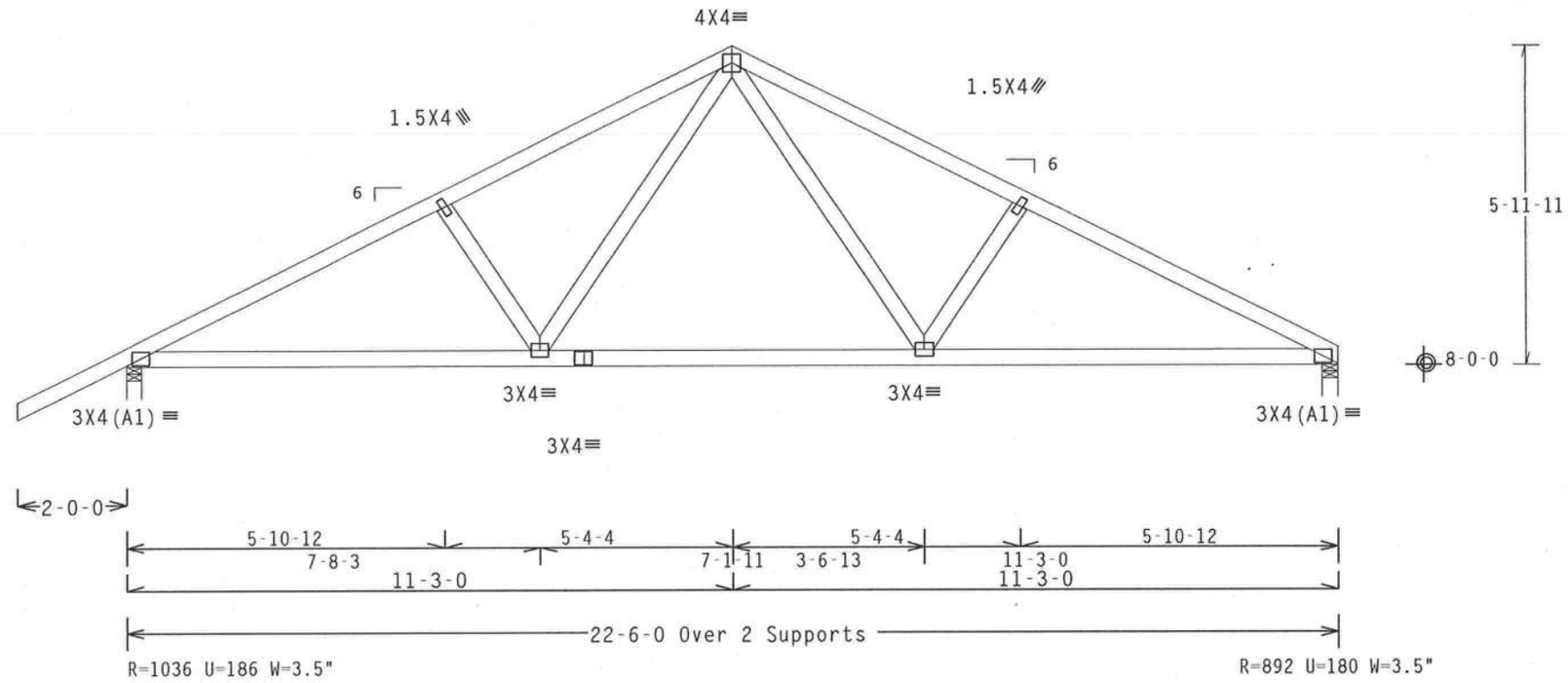

PLT TYP. Wave TPI | Design Crit: TPI-1995(STD)/FBC | 7.04.0805 | QTY:7 | FL/-/4/-/-/R/- | Scale =.3125"/Ft.

ALPINE
Alpine Engineered Products, Inc
1950 Marley Drive
Haines City, FL 33844
FL Certificate of Authorization # 567

WARNING TRUSSES REQUIRE EXTREME CARE IN FABRICATION, HANDLING, SHIPPING, INSTALLING AND BRACING. REFER TO BCSI 1-03 (BUILDING COMPONENT SAFETY INFORMATION), PUBLISHED BY TPI (TRUSS PLATE INSTITUTE, 583 D'ONOFRIO DR., SUITE 200, MADISON, WI 53719) AND WTCA (WOOD TRUSS COUNCIL OF AMERICA, 6300 ENTERPRISE LN, MADISON, WI 53719) FOR SAFETY PRACTICES PRIOR TO PERFORMING THESE FUNCTIONS. UNLESS OTHERWISE INDICATED, TOP CHORD SHALL HAVE PROPERLY ATTACHED STRUCTURAL PANELS AND BOTTOM CHORD SHALL HAVE A PROPERLY ATTACHED RIGID CEILING.

IMPORTANT FURNISH A COPY OF THIS DESIGN TO THE INSTALLATION CONTRACTOR. ALPINE ENGINEERED PRODUCTS, INC. SHALL NOT BE RESPONSIBLE FOR ANY DEVIATION FROM THIS DESIGN; ANY FAILURE TO BUILD THE TRUSS IN CONFORMANCE WITH TPI; OR FABRICATING, HANDLING, SHIPPING, INSTALLING & BRACING OF TRUSSES. DESIGN CONFORMS WITH APPLICABLE PROVISIONS OF NDS (NATIONAL DESIGN SPEC, BY AF&PA) AND TPI. ALPINE CONNECTOR PLATES ARE MADE OF 20/18/16GA (W,H/S/K) ASTM A653 GRADE 40/60 (W, K/H,S) GALV. STEEL. APPLY PLATES TO EACH FACE OF TRUSS AND, UNLESS OTHERWISE LOCATED ON THIS DESIGN, POSITION PER DRAWINGS 160A-Z. ANY INSPECTION OF PLATES FOLLOWED BY (I) SHALL BE PER ANNEX A3 OF TPI1-2002 SEC.3. A SEAL ON THIS DRAWING INDICATES ACCEPTANCE OF PROFESSIONAL ENGINEERING RESPONSIBILITY SOLELY FOR THE TRUSS COMPONENT DESIGN SHOWN. THE SUITABILITY AND USE OF THIS COMPONENT FOR ANY BUILDING IS THE RESPONSIBILITY OF THE BUILDING DESIGNER PER ANSI/TPI 1 SEC. 2.

ARTHUR R. FISHER
LICENSE
No. 59687
STATE OF
FLORIDA
PROFESSIONAL ENGINEER
Sep 12 '05

TC LL	20.0 PSF	REF	R487-- 88077
TC DL	10.0 PSF	DATE	09/12/05
BC DL	10.0 PSF	DRW	HCUSR487 05255085
BC LL	0.0 PSF	HC-ENG	DF/AF *
TOT.LD.	40.0 PSF	SEQN-	31808
DUR.FAC.	1.25	FROM	JP
SPACING	24.0"	JREF-	1SQF487_Z03

(5-399-MACK ROBINSON-LITTLE - C3)

Top chord 2x4 SP #2 Dense
Bot chord 2x4 SP #2 Dense
Webs 2x4 SP #3

Deflection meets L/360 live and L/240 total load.

110 mph wind, 10.93 ft mean hgt, ASCE 7-98, CLOSED bldg, not located within 4.50 ft from roof edge, CAT II, EXP B, wind TC DL=5.0 psf, wind BC DL=5.0 psf.

Right end vertical not exposed to wind pressure.

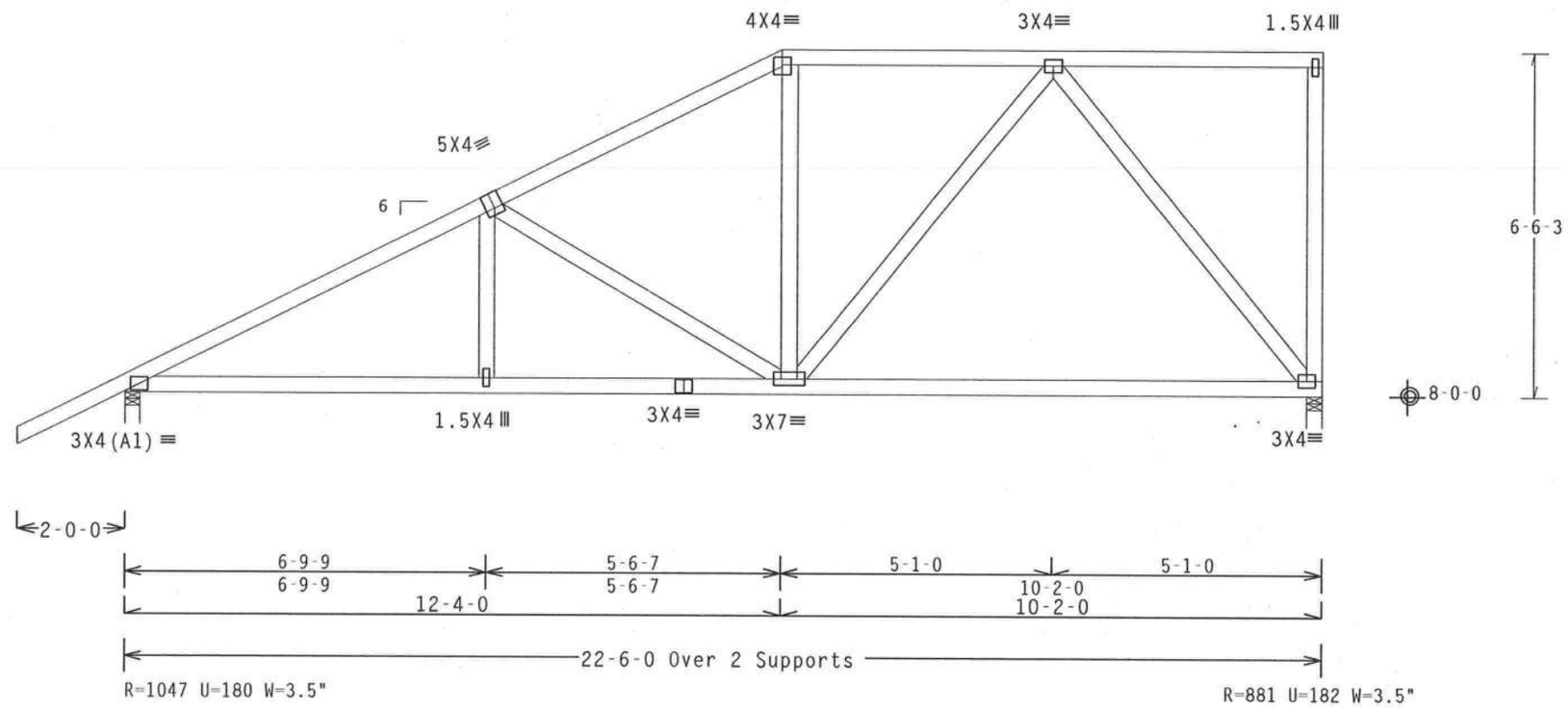

PLT TYP. Wave TPI | Design Crit: TPI-1995(STD)/FBC | 7.04.0805 | QTY:1 | FL/-/4/-/-/R/- | Scale =.3125"/Ft.

ALPINE

Alpine Engineered Products, Inc.
1950 Marley Drive
Haines City, FL 33844
FL Certificate of Authorization # 567

WARNING TRUSSES REQUIRE EXTREME CARE IN FABRICATION, HANDLING, SHIPPING, INSTALLING AND BRACING. REFER TO BCSI 1-03 (BUILDING COMPONENT SAFETY INFORMATION), PUBLISHED BY TPI (TRUSS PLATE INSTITUTE, 583 D'ONOFRIO DR., SUITE 200, MADISON, WI 53719) AND WTCA (WOOD TRUSS COUNCIL OF AMERICA, 6300 ENTERPRISE LN. MADISON, WI 53719) FOR SAFETY PRACTICES PRIOR TO PERFORMING THESE FUNCTIONS. UNLESS OTHERWISE INDICATED, TOP CHORD SHALL HAVE PROPERLY ATTACHED STRUCTURAL PANELS AND BOTTOM CHORD SHALL HAVE A PROPERLY ATTACHED RIGID CEILING.

IMPORTANT FURNISH A COPY OF THIS DESIGN TO THE INSTALLATION CONTRACTOR. ALPINE ENGINEERED PRODUCTS, INC. SHALL NOT BE RESPONSIBLE FOR ANY DEVIATION FROM THIS DESIGN; ANY FAILURE TO BUILD THE TRUSS IN CONFORMANCE WITH TPI; OR FABRICATING, HANDLING, SHIPPING, INSTALLING & BRACING OF TRUSSES. DESIGN CONFORMS WITH APPLICABLE PROVISIONS OF NDS (NATIONAL DESIGN SPEC. BY AF&PA) AND TPI. ALPINE CONNECTOR PLATES ARE MADE OF 20/18/16GA (W,H/S/K) ASTM A653 GRADE 40/60 (W, K/H,S) GALV. STEEL. APPLY PLATES TO EACH FACE OF TRUSS AND, UNLESS OTHERWISE LOCATED ON THIS DESIGN, POSITION PER DRAWINGS 160A-Z. ANY INSPECTION OF PLATES FOLLOWED BY (I) SHALL BE PER ANNEX A3 OF TPI1-2002 SEC.3. A SEAL ON THIS DRAWING INDICATES ACCEPTANCE OF PROFESSIONAL ENGINEERING RESPONSIBILITY SOLELY FOR THE TRUSS COMPONENT DESIGN SHOWN. THE SUITABILITY AND USE OF THIS COMPONENT FOR ANY BUILDING IS THE RESPONSIBILITY OF THE BUILDING DESIGNER PER ANSI/TPI 1 SEC. 2.

ARTHUR R. FISHER
LICENSE
No. 59687
STATE OF FLORIDA
PROFESSIONAL ENGINEER
Sep 12 '05

TC LL	20.0 PSF	REF	R487-- 88078
TC DL	10.0 PSF	DATE	09/12/05
BC DL	10.0 PSF	DRW	HCUSR487 05255086
BC LL	0.0 PSF	HC-ENG	DF/AF *
TOT.LD.	40.0 PSF	SEQN-	31824
DUR.FAC.	1.25	FROM	JP
SPACING	24.0"	JREF-	1SQF487_Z03

(5-399-MACK ROBINSON-LITTLE - C4)

Top chord 2x4 SP #2 Dense
Bot chord 2x4 SP #2 Dense
Webs 2x4 SP #3

(A) Continuous lateral bracing equally spaced on member.

Deflection meets L/360 live and L/240 total load.

110 mph wind, 11.43 ft mean hgt, ASCE 7-98, CLOSED bldg, not located within 4.50 ft from roof edge, CAT II, EXP B, wind TC DL=5.0 psf, wind BC DL=5.0 psf.

Right end vertical not exposed to wind pressure.

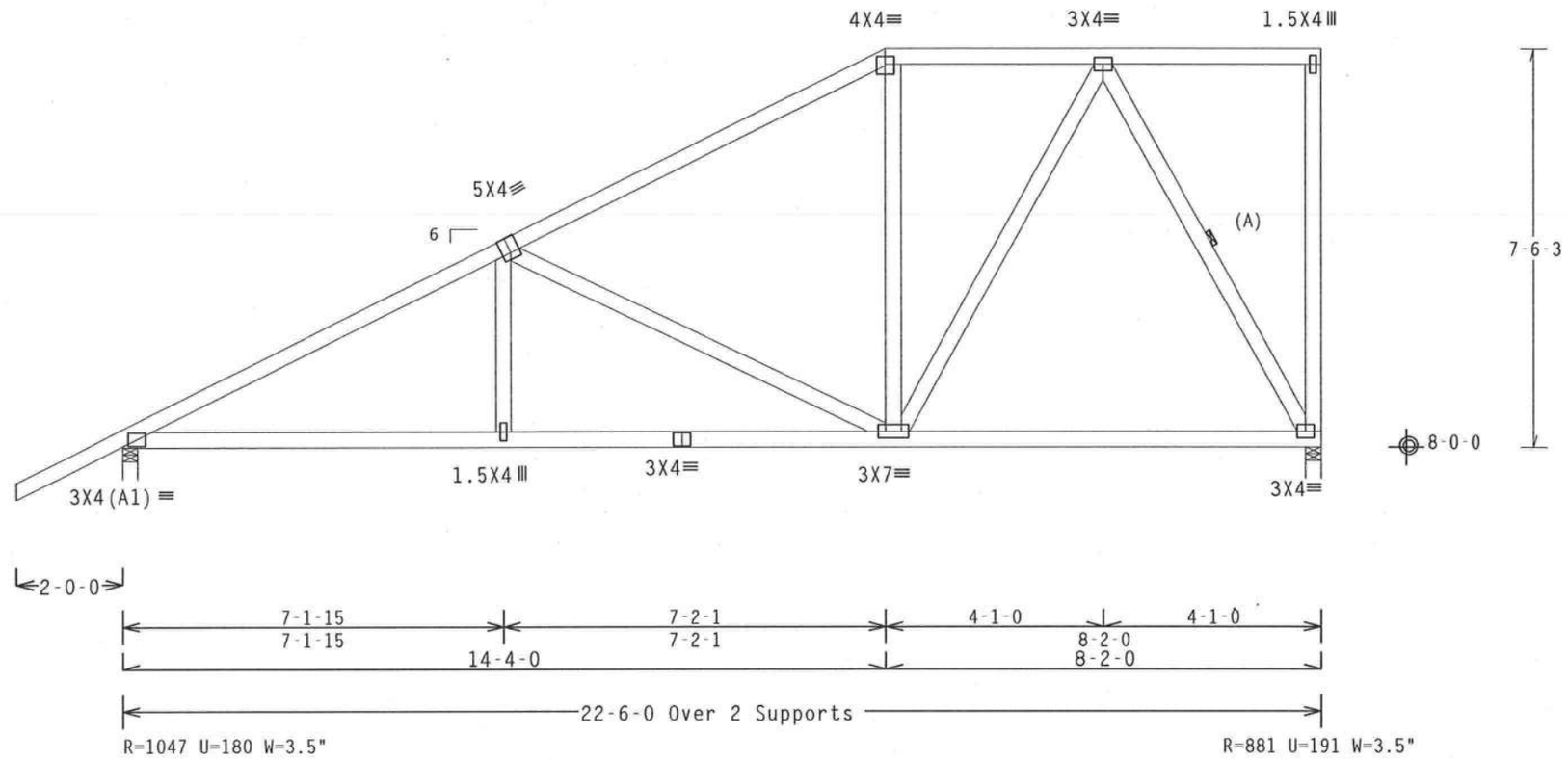

PLT TYP. Wave TPI | Design Crit: TPI-1995(STD)/FBC | 7.04.0805 | QTY:1 | FL/-/4/-/-/R/- | Scale =.3125"/Ft.

ALPINE
Alpine Engineered Products, Inc
1950 Marley Drive
Haines City, FL 33844
FL Certificate of Authorization # 567

WARNING TRUSSES REQUIRE EXTREME CARE IN FABRICATION, HANDLING, SHIPPING, INSTALLING AND BRACING. REFER TO BCSI 1-03 (BUILDING COMPONENT SAFETY INFORMATION), PUBLISHED BY TPI (TRUSS PLATE INSTITUTE, 583 D'ONOFRIO DR., SUITE 200, MADISON, WI 53719) AND WTCA (WOOD TRUSS COUNCIL OF AMERICA, 6300 ENTERPRISE LN, MADISON, WI 53719) FOR SAFETY PRACTICES PRIOR TO PERFORMING THESE FUNCTIONS. UNLESS OTHERWISE INDICATED, TOP CHORD SHALL HAVE PROPERLY ATTACHED STRUCTURAL PANELS AND BOTTOM CHORD SHALL HAVE A PROPERLY ATTACHED RIGID CEILING.

IMPORTANT FURNISH A COPY OF THIS DESIGN TO THE INSTALLATION CONTRACTOR. ALPINE ENGINEERED PRODUCTS, INC. SHALL NOT BE RESPONSIBLE FOR ANY DEVIATION FROM THIS DESIGN; ANY FAILURE TO BUILD THE TRUSS IN CONFORMANCE WITH TPI; OR FABRICATING, HANDLING, SHIPPING, INSTALLING & BRACING OF TRUSSES. DESIGN CONFORMS WITH APPLICABLE PROVISIONS OF NDS (NATIONAL DESIGN SPEC, BY AF&PA) AND TPI. ALPINE CONNECTOR PLATES ARE MADE OF 20/18/16GA (W.H/S/K) ASTM A653 GRADE 40/60 (W. K/H.S) GALV. STEEL. APPLY PLATES TO EACH FACE OF TRUSS AND, UNLESS OTHERWISE LOCATED ON THIS DESIGN, POSITION PER DRAWINGS 160A-Z. ANY INSPECTION OF PLATES FOLLOWED BY (1) SHALL BE PER ANNEX A3 OF TPI1-2002 SEC.3. A SEAL ON THIS DRAWING INDICATES ACCEPTANCE OF PROFESSIONAL ENGINEERING RESPONSIBILITY SOLELY FOR THE TRUSS COMPONENT DESIGN SHOWN. THE SUITABILITY AND USE OF THIS COMPONENT FOR ANY BUILDING IS THE RESPONSIBILITY OF THE BUILDING DESIGNER PER ANSI/TPI 1 SEC. 2.

ARTHUR R. FISHER LICENSE No. 59587 STATE OF FLORIDA PROFESSIONAL ENGINEER

Sep 12 '05

TC LL	20.0 PSF	REF	R487-- 88079
TC DL	10.0 PSF	DATE	09/12/05
BC DL	10.0 PSF	DRW	HCUSR487 05255087
BC LL	0.0 PSF	HC-ENG	DF/AF *
TOT.LD.	40.0 PSF	SEQN-	31833
DUR.FAC.	1.25	FROM	JP
SPACING	24.0"	JREF-	1SQF487_Z03

(5-399-MACK ROBINSON-LITTLE - C5)

Top chord 2x4 SP #2 Dense
Bot chord 2x4 SP #2 Dense
Webs 2x4 SP #3

(A) Continuous lateral bracing equally spaced on member.

Deflection meets L/360 live and L/240 total load.

110 mph wind, 11.93 ft mean hgt, ASCE 7-98, CLOSED bldg, not located within 4.50 ft from roof edge, CAT II, EXP B, wind TC DL=5.0 psf, wind BC DL=5.0 psf.

Right end vertical not exposed to wind pressure.

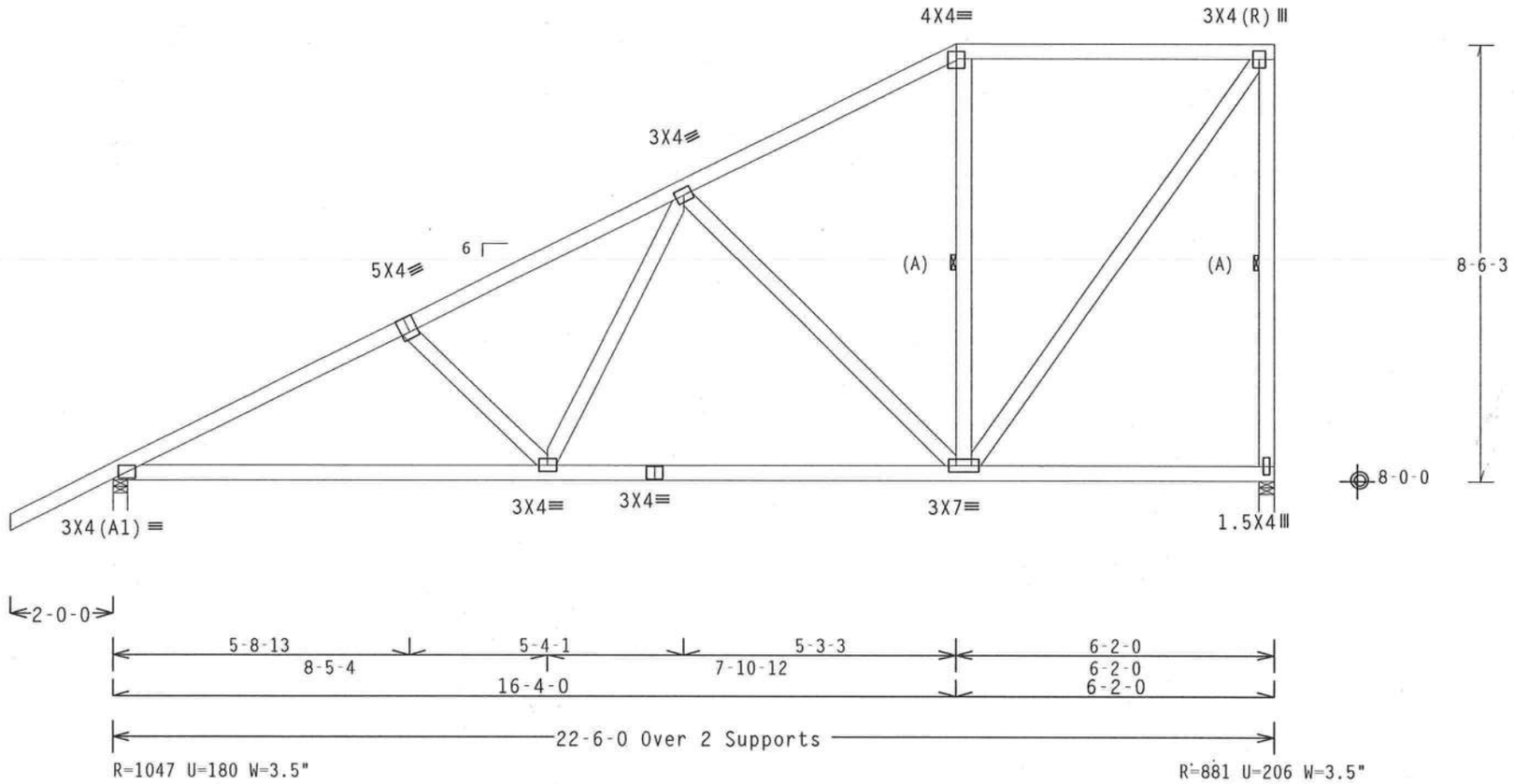

PLT TYP. Wave TPI | Design Crit: TPI-1995(STD)/FBC | 7.04.0805 | QTY:1 | FL/-/4/-/-/R/- | Scale =.3125"/Ft.

ALPINE

Alpine Engineered Products, Inc.
1950 Marley Drive
Haines City, FL 33844
FL Certificate of Authorization # 567

WARNING TRUSSES REQUIRE EXTREME CARE IN FABRICATION, HANDLING, SHIPPING, INSTALLING AND BRACING. REFER TO BCSI 1-03 (BUILDING COMPONENT SAFETY INFORMATION), PUBLISHED BY TPI (TRUSS PLATE INSTITUTE, 583 D'ONOFRIO DR., SUITE 200, MADISON, WI 53719) AND WTCA (WOOD TRUSS COUNCIL OF AMERICA, 6300 ENTERPRISE LN, MADISON, WI 53719) FOR SAFETY PRACTICES PRIOR TO PERFORMING THESE FUNCTIONS. UNLESS OTHERWISE INDICATED, TOP CHORD SHALL HAVE PROPERLY ATTACHED STRUCTURAL PANELS AND BOTTOM CHORD SHALL HAVE A PROPERLY ATTACHED RIGID CEILING.

IMPORTANT FURNISH A COPY OF THIS DESIGN TO THE INSTALLATION CONTRACTOR. ALPINE ENGINEERED PRODUCTS, INC. SHALL NOT BE RESPONSIBLE FOR ANY DEVIATION FROM THIS DESIGN; ANY FAILURE TO BUILD THE TRUSS IN CONFORMANCE WITH TPI; OR FABRICATING, HANDLING, SHIPPING, INSTALLING & BRACING OF TRUSSES. DESIGN CONFORMS WITH APPLICABLE PROVISIONS OF NDS (NATIONAL DESIGN SPEC. BY AF&PA) AND TPI. ALPINE CONNECTOR PLATES ARE MADE OF 20/18/16GA (W,H/S/K) ASTM A653 GRADE 40/60 (W, K/H,S) GALV. STEEL. APPLY PLATES TO EACH FACE OF TRUSS AND, UNLESS OTHERWISE LOCATED ON THIS DESIGN, POSITION PER DRAWINGS 160A-Z. ANY INSPECTION OF PLATES FOLLOWED BY (1) SHALL BE PER ANNEX A3 OF TPI1-2002 SEC.3. A SEAL ON THIS DRAWING INDICATES ACCEPTANCE OF PROFESSIONAL ENGINEERING RESPONSIBILITY SOLELY FOR THE TRUSS COMPONENT DESIGN SHOWN. THE SUITABILITY AND USE OF THIS COMPONENT FOR ANY BUILDING IS THE RESPONSIBILITY OF THE BUILDING DESIGNER PER ANSI/TPI 1 SEC. 2.

ARTHUR R. FISHER
LICENSE
No. 59687
STATE OF FLORIDA
PROFESSIONAL ENGINEER

Sep 12 '05

TC LL	20.0 PSF	REF R487-- 88080
TC DL	10.0 PSF	DATE 09/12/05
BC DL	10.0 PSF	DRW HCUSR487 05255088
BC LL	0.0 PSF	HC-ENG DF/AF *
TOT.LD.	40.0 PSF	SEQN- 31842
DUR.FAC.	1.25	FROM JP
SPACING	24.0"	JREF- 1SQF487_Z03

(5-399-MACK ROBINSON-LITTLE - C6)

Top chord 2x4 SP #2 Dense
Bot chord 2x4 SP #2 Dense
Webs 2x4 SP #3

(A) Continuous lateral bracing equally spaced on member.

Deflection meets L/360 live and L/240 total load.

110 mph wind, 12.43 ft mean hgt, ASCE 7-98, CLOSED bldg, not located within 4.50 ft from roof edge, CAT II, EXP B, wind TC DL=5.0 psf, wind BC DL=5.0 psf.

Right end vertical not exposed to wind pressure.

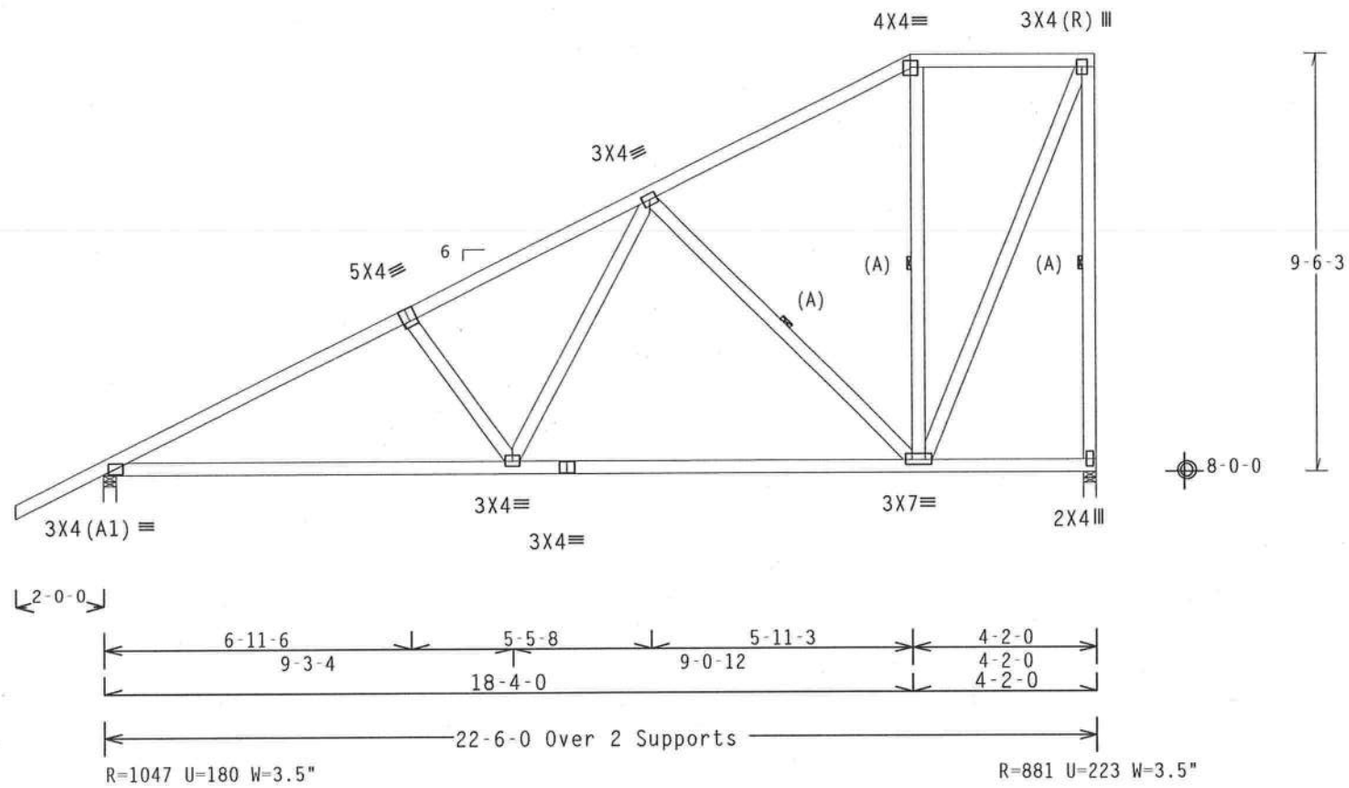

PLT TYP. Wave TPI | Design Crit: TPI-1995(STD)/FBC | 7.04.0805 | QTY:1 | FL/-/4/-/-/R/- | Scale =.25"/Ft.

ALPINE
Alpine Engineered Products, Inc.
1950 Marley Drive
Haines City, FL 33844
FL Certificate of Authorization # 567

WARNING TRUSSES REQUIRE EXTREME CARE IN FABRICATION, HANDLING, SHIPPING, INSTALLING AND BRACING. REFER TO BCSI 1-03 (BUILDING COMPONENT SAFETY INFORMATION), PUBLISHED BY TPI (TRUSS PLATE INSTITUTE, 583 D'ONOFRIO DR., SUITE 200, MADISON, WI 53719) AND WTCA (WOOD TRUSS COUNCIL OF AMERICA, 6300 ENTERPRISE LN, MADISON, WI 53719) FOR SAFETY PRACTICES PRIOR TO PERFORMING THESE FUNCTIONS. UNLESS OTHERWISE INDICATED, TOP CHORD SHALL HAVE PROPERLY ATTACHED STRUCTURAL PANELS AND BOTTOM CHORD SHALL HAVE A PROPERLY ATTACHED RIGID CEILING.

IMPORTANT FURNISH A COPY OF THIS DESIGN TO THE INSTALLATION CONTRACTOR. ALPINE ENGINEERED PRODUCTS, INC. SHALL NOT BE RESPONSIBLE FOR ANY DEVIATION FROM THIS DESIGN; ANY FAILURE TO BUILD THE TRUSS IN CONFORMANCE WITH TPI; OR FABRICATING, HANDLING, SHIPPING, INSTALLING & BRACING OF TRUSSES. DESIGN CONFORMS WITH APPLICABLE PROVISIONS OF NDS (NATIONAL DESIGN SPEC. BY AF&PA) AND TPI. ALPINE CONNECTOR PLATES ARE MADE OF 20/18/16GA (W,H/S/K) ASTM A653 GRADE 40/60 (W, K/H,S) GALV. STEEL. APPLY PLATES TO EACH FACE OF TRUSS AND, UNLESS OTHERWISE LOCATED ON THIS DESIGN, POSITION PER DRAWINGS 160A-Z. ANY INSPECTION OF PLATES FOLLOWED BY (I) SHALL BE PER ANNEX A3 OF TPI1-2002 SEC.3. A SEAL ON THIS DRAWING INDICATES ACCEPTANCE OF PROFESSIONAL ENGINEERING RESPONSIBILITY SOLELY FOR THE TRUSS COMPONENT DESIGN SHOWN. THE SUITABILITY AND USE OF THIS COMPONENT FOR ANY BUILDING IS THE RESPONSIBILITY OF THE BUILDING DESIGNER PER ANSI/TPI 1 SEC. 2.

ARTHUR R. FISHER LICENSE No. 50687 STATE OF FLORIDA PROFESSIONAL ENGINEER

Sep 12 '05

TC LL	20.0 PSF	REF	R487-- 88081
TC DL	10.0 PSF	DATE	09/12/05
BC DL	10.0 PSF	DRW	HCUSR487 05255089
BC LL	0.0 PSF	HC-ENG	DF/AF *
TOT.LD.	40.0 PSF	SEQN-	31853
DUR.FAC.	1.25	FROM	JP
SPACING	24.0"	JREF-	1SQF487_Z03

(5-399-MACK ROBINSON-LITTLE - D1)

Top chord 2x4 SP #2 Dense
Bot chord 2x4 SP #2 Dense
Webs 2x4 SP #3

#1 hip supports 7-3-8 jacks with no webs.

Deflection meets L/360 live and L/240 total load.

110 mph wind, 15.00 ft mean hgt, ASCE 7-98, CLOSED bldg, Located anywhere in roof, CAT II, EXP B, wind TC DL=5.0 psf, wind BC DL=5.0 psf.

Left side jacks have 7-3-8 setback with 0-0-0 cant and 2-0-0 overhang. End jacks have 7-3-8 setback with 0-0-0 cant and 2-0-0 overhang. Right side jacks have 7-3-8 setback with 0-0-0 cant and 2-0-0 overhang.

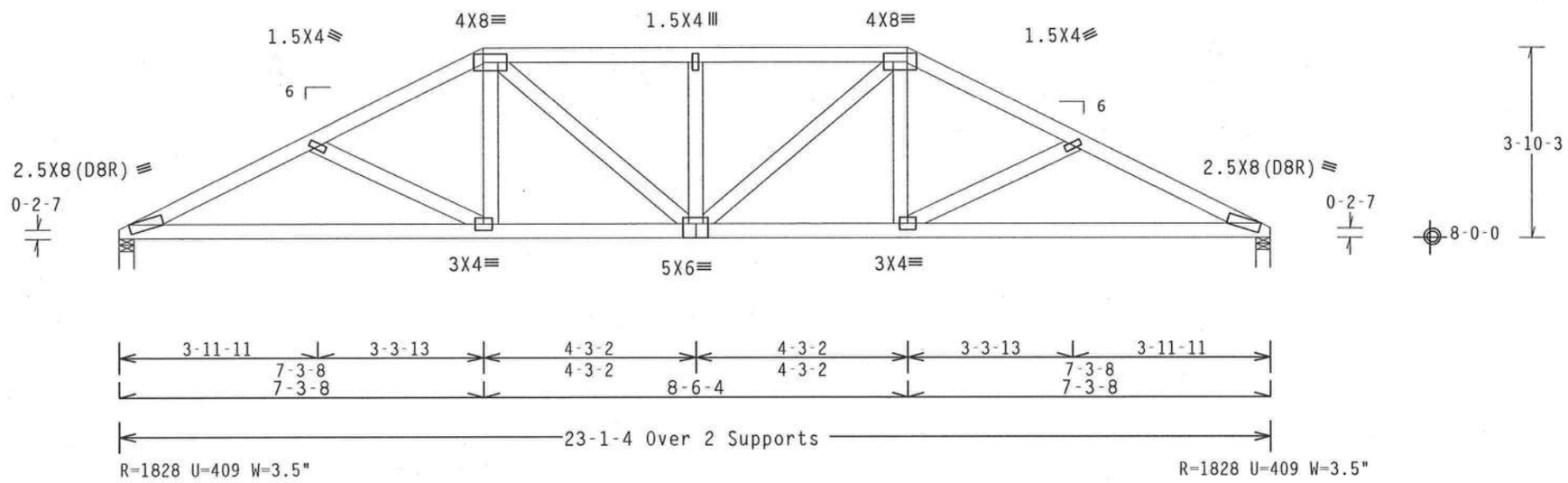

PLT TYP. Wave TPI | Design Crit: TPI-1995(STD)/FBC | 7.04.0805 | QTY:1 | FL/-/4/-/-/R/- | Scale =.3125"/Ft.

ALPINE

Alpine Engineered Products, Inc
1950 Marley Drive
Haines City, FL 33844
FL Certificate of Authorization # 567

WARNING TRUSSES REQUIRE EXTREME CARE IN FABRICATION, HANDLING, SHIPPING, INSTALLING AND BRACING. REFER TO BCSI 1-03 (BUILDING COMPONENT SAFETY INFORMATION), PUBLISHED BY TPI (TRUSS PLATE INSTITUTE, 583 D'ONOFRIO DR., SUITE 200, MADISON, WI 53719) AND WTCA (WOOD TRUSS COUNCIL OF AMERICA, 6300 ENTERPRISE LN, MADISON, WI 53719) FOR SAFETY PRACTICES PRIOR TO PERFORMING THESE FUNCTIONS. UNLESS OTHERWISE INDICATED, TOP CHORD SHALL HAVE PROPERLY ATTACHED STRUCTURAL PANELS AND BOTTOM CHORD SHALL HAVE A PROPERLY ATTACHED RIGID CEILING.

IMPORTANT FURNISH A COPY OF THIS DESIGN TO THE INSTALLATION CONTRACTOR. ALPINE ENGINEERED PRODUCTS, INC. SHALL NOT BE RESPONSIBLE FOR ANY DEVIATION FROM THIS DESIGN; ANY FAILURE TO BUILD THE TRUSS IN CONFORMANCE WITH TPI; OR FABRICATING, HANDLING, SHIPPING, INSTALLING & BRACING OF TRUSSES. DESIGN CONFORMS WITH APPLICABLE PROVISIONS OF NDS (NATIONAL DESIGN SPEC, BY AF&PA) AND TPI. ALPINE CONNECTOR PLATES ARE MADE OF 20/18/16GA (W,H/S/K) ASTM A653 GRADE 40/60 (W, K/H,S) GALV. STEEL. APPLY PLATES TO EACH FACE OF TRUSS AND, UNLESS OTHERWISE LOCATED ON THIS DESIGN, POSITION PER DRAWINGS 160A-Z. ANY INSPECTION OF PLATES FOLLOWED BY (1) SHALL BE PER ANNEX A3 OF TPI1-2002 SEC.3. A SEAL ON THIS DRAWING INDICATES ACCEPTANCE OF PROFESSIONAL ENGINEERING RESPONSIBILITY SOLELY FOR THE TRUSS COMPONENT DESIGN SHOWN. THE SUITABILITY AND USE OF THIS COMPONENT FOR ANY BUILDING IS THE RESPONSIBILITY OF THE BUILDING DESIGNER PER ANSI/TPI 1 SEC. 2.

ARTHUR R. FISHER
LICENSE
No. 56687
STATE OF
FLORIDA
PROFESSIONAL ENGINEER

Sep 12 '05

TC LL	20.0 PSF	REF	R487-- 88082
TC DL	10.0 PSF	DATE	09/12/05
BC DL	10.0 PSF	DRW	HCUSR487 05255101
BC LL	0.0 PSF	HC-ENG	DF/AF
TOT.LD.	40.0 PSF	SEQN-	10070
DUR.FAC.	1.25	FROM	JP
SPACING	SEE ABOVE	JREF-	1SQF487_Z03

(5-399-MACK ROBINSON-LITTLE - HJA)

Top chord 2x4 SP #2 Dense
Bot chord 2x4 SP #2 Dense
Webs 2x4 SP #3

Hipjack supports 8-3-8 setback jacks. Jacks up to 7' have no webs.
Longer jacks supported to BC.

110 mph wind, 15.00 ft mean hgt, ASCE 7-98, CLOSED bldg, Located anywhere in roof, CAT II, EXP B, wind TC DL=5.0 psf, wind BC DL=5.0 psf.

Right end vertical not exposed to wind pressure.

Deflection meets L/360 live and L/240 total load.

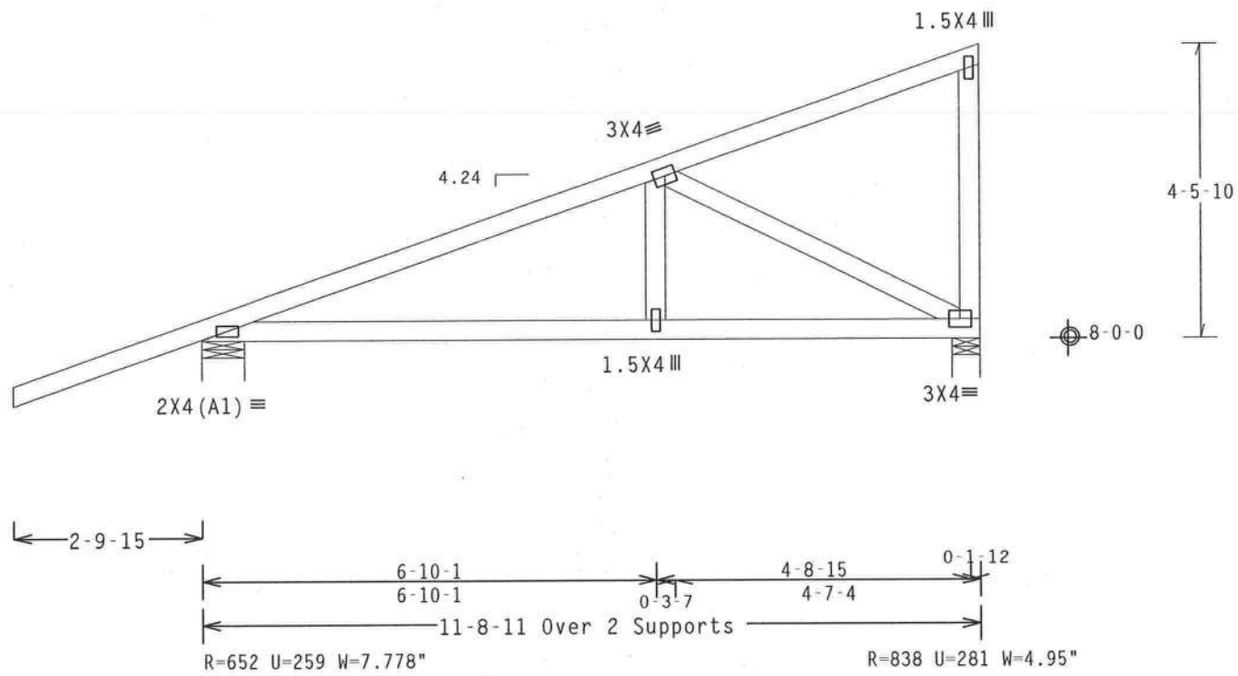

PLT TYP. Wave TPI | Design Crit: TPI-1995(STD)/FBC | 7.04.0805.1 | QTY:1 | FL/-/4/-/-/R/- | Scale =.375"/Ft.

ALPINE
Alpine Engineered Products, Inc
1950 Marley Drive
Haines City, FL 33844
FL Certificate of Authorization # 567

WARNING TRUSSES REQUIRE EXTREME CARE IN FABRICATION, HANDLING, SHIPPING, INSTALLING AND BRACING. REFER TO BCSI 1-03 (BUILDING COMPONENT SAFETY INFORMATION), PUBLISHED BY TPI (TRUSS PLATE INSTITUTE, 583 D'ONOFRIO DR., SUITE 200, MADISON, WI 53719) AND WTCA (WOOD TRUSS COUNCIL OF AMERICA, 6300 ENTERPRISE LN, MADISON, WI 53719) FOR SAFETY PRACTICES PRIOR TO PERFORMING THESE FUNCTIONS. UNLESS OTHERWISE INDICATED, TOP CHORD SHALL HAVE PROPERLY ATTACHED STRUCTURAL PANELS AND BOTTOM CHORD SHALL HAVE A PROPERLY ATTACHED RIGID CEILING.

IMPORTANT FURNISH A COPY OF THIS DESIGN TO THE INSTALLATION CONTRACTOR. ALPINE ENGINEERED PRODUCTS, INC. SHALL NOT BE RESPONSIBLE FOR ANY DEVIATION FROM THIS DESIGN; ANY FAILURE TO BUILD THE TRUSS IN CONFORMANCE WITH TPI; OR FABRICATING, HANDLING, SHIPPING, INSTALLING & BRACING OF TRUSSES. DESIGN CONFORMS WITH APPLICABLE PROVISIONS OF NDS (NATIONAL DESIGN SPEC, BY AF&PA) AND TPI. ALPINE CONNECTOR PLATES ARE MADE OF 20/18/16GA (W,H/S/K) ASTM A653 GRADE 40/60 (W, K/H,S) GALV. STEEL. APPLY PLATES TO EACH FACE OF TRUSS AND, UNLESS OTHERWISE LOCATED ON THIS DESIGN, POSITION PER DRAWINGS 160A-Z. ANY INSPECTION OF PLATES FOLLOWED BY (1) SHALL BE PER ANNEX A3 OF TPI1-2002 SEC.3. A SEAL ON THIS DRAWING INDICATES ACCEPTANCE OF PROFESSIONAL ENGINEERING RESPONSIBILITY SOLELY FOR THE TRUSS COMPONENT DESIGN SHOWN. THE SUITABILITY AND USE OF THIS COMPONENT FOR ANY BUILDING IS THE RESPONSIBILITY OF THE BUILDING DESIGNER PER ANSI/TPI 1 SEC. 2.

ARTHUR R. FISHER
LICENSE
No. 55687
STATE OF
FLORIDA
PROFESSIONAL ENGINEER

Sep 12 '05

TC LL	20.0 PSF	REF	R487-- 88083
TC DL	10.0 PSF	DATE	09/12/05
BC DL	10.0 PSF	DRW	HCUSR487 05255102
BC LL	0.0 PSF	HC-ENG	DF/AF
TOT.LD.	40.0 PSF	SEQN-	31722
DUR.FAC.	1.25	FROM	JP
SPACING	SEE ABOVE	JREF-	1SQF487_Z03

(5-399-MACK ROBINSON-LITTLE - HJ7)

Top chord 2x4 SP #2 Dense
Bot chord 2x4 SP #2 Dense
Webs 2x4 SP #3

Hipjack supports 7-0-0 setback jacks with no webs.

Provide (2) 16d common nails(0.162"x3.5"), toe nailed at Top chord.
Provide (3) 16d common nails(0.162"x3.5"), toe nailed at Bot chord.

110 mph wind, 15.00 ft mean hgt, ASCE 7-98, CLOSED bldg, Located anywhere in roof, CAT II, EXP B, wind TC DL=5.0 psf, wind BC DL=5.0 psf.

Deflection meets L/360 live and L/240 total load.

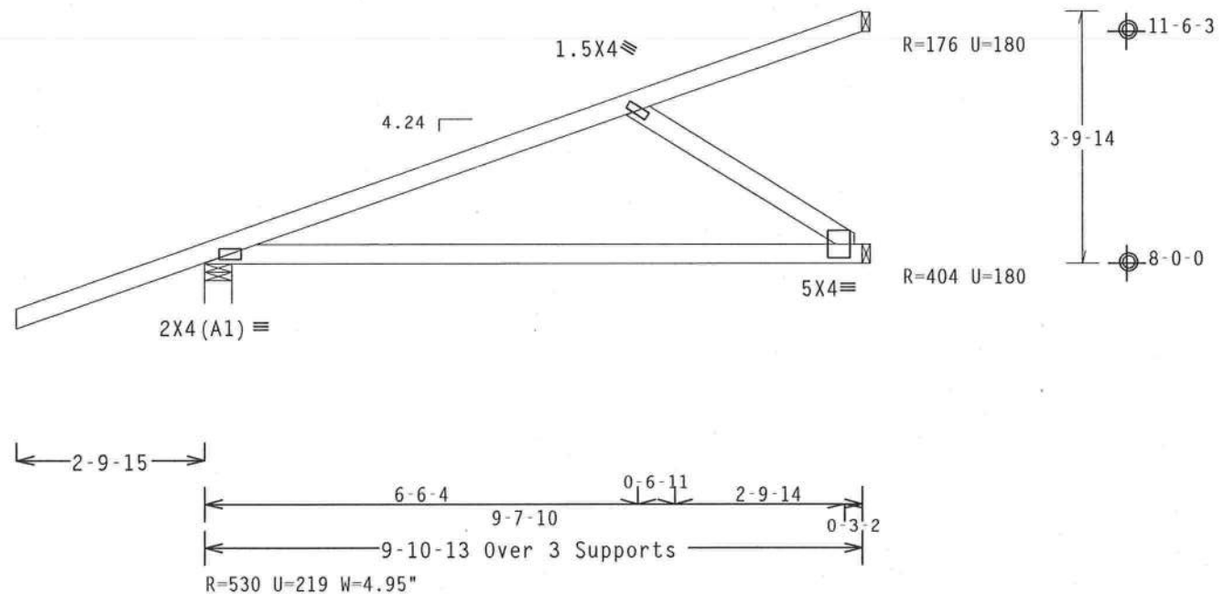

PLT TYP. Wave TPI | Design Crit: TPI-1995(STD)/FBC | 7.04.0805 | QTY:5 | FL/-/4/-/-/R/- | Scale =.375"/Ft.

ALPINE

Alpine Engineered Products, Inc
1950 Marley Drive
Haines City, FL 33844
FL Certificate of Authorization # 567

WARNING TRUSSES REQUIRE EXTREME CARE IN FABRICATION, HANDLING, SHIPPING, INSTALLING AND BRACING. REFER TO BCSI 1-03 (BUILDING COMPONENT SAFETY INFORMATION), PUBLISHED BY TPI (TRUSS PLATE INSTITUTE, 583 D'ONOFRIO DR., SUITE 200, MADISON, WI 53719) AND WTCA (WOOD TRUSS COUNCIL OF AMERICA, 6300 ENTERPRISE LN, MADISON, WI 53719) FOR SAFETY PRACTICES PRIOR TO PERFORMING THESE FUNCTIONS. UNLESS OTHERWISE INDICATED, TOP CHORD SHALL HAVE PROPERLY ATTACHED STRUCTURAL PANELS AND BOTTOM CHORD SHALL HAVE A PROPERLY ATTACHED RIGID CEILING.

IMPORTANT FURNISH A COPY OF THIS DESIGN TO THE INSTALLATION CONTRACTOR. ALPINE ENGINEERED PRODUCTS, INC. SHALL NOT BE RESPONSIBLE FOR ANY DEVIATION FROM THIS DESIGN; ANY FAILURE TO BUILD THE TRUSS IN CONFORMANCE WITH TPI; OR FABRICATING, HANDLING, SHIPPING, INSTALLING & BRACING OF TRUSSES. DESIGN CONFORMS WITH APPLICABLE PROVISIONS OF NDS (NATIONAL DESIGN SPEC. BY AF&PA) AND TPI. ALPINE CONNECTOR PLATES ARE MADE OF 20/18/16GA (W,H/S/K) ASTM A653 GRADE 40/60 (W, K/H.S) GALV. STEEL. APPLY PLATES TO EACH FACE OF TRUSS AND, UNLESS OTHERWISE LOCATED ON THIS DESIGN, POSITION PER DRAWINGS 160A-Z. ANY INSPECTION OF PLATES FOLLOWED BY (1) SHALL BE PER ANNEX A3 OF TPI1-2002 SEC.3. A SEAL ON THIS DRAWING INDICATES ACCEPTANCE OF PROFESSIONAL ENGINEERING RESPONSIBILITY SOLELY FOR THE TRUSS COMPONENT DESIGN SHOWN. THE SUITABILITY AND USE OF THIS COMPONENT FOR ANY BUILDING IS THE RESPONSIBILITY OF THE BUILDING DESIGNER PER ANSI/TPI 1 SEC. 2.

ARTHUR R. FISHER
LICENSE
No. 59687
STATE OF FLORIDA
PROFESSIONAL ENGINEER

Sep 12 '05

TC LL	20.0 PSF	REF	R487-- 88084
TC DL	10.0 PSF	DATE	09/12/05
BC DL	10.0 PSF	DRW	HCUSR487 05255103
BC LL	0.0 PSF	HC-ENG	DF/AF
TOT.LD.	40.0 PSF	SEQN-	31700
DUR.FAC.	1.25	FROM	JP
SPACING	SEE ABOVE	JREF-	1SQF487_Z03

(5-399-MACK ROBINSON-LITTLE - EJ7)

Top chord 2x4 SP #2 Dense
Bot chord 2x4 SP #2 Dense

Deflection meets L/360 live and L/240 total load.

110 mph wind, 9.60 ft mean hgt, ASCE 7-98, CLOSED bldg, not located within 4.50 ft from roof edge, CAT II, EXP B, wind TC DL=5.0 psf, wind BC DL=5.0 psf.

Provide (2) 16d common nails(0.162"x3.5"), toe nailed at Top chord.
Provide (2) 16d common nails(0.162"x3.5"), toe nailed at Bot chord.

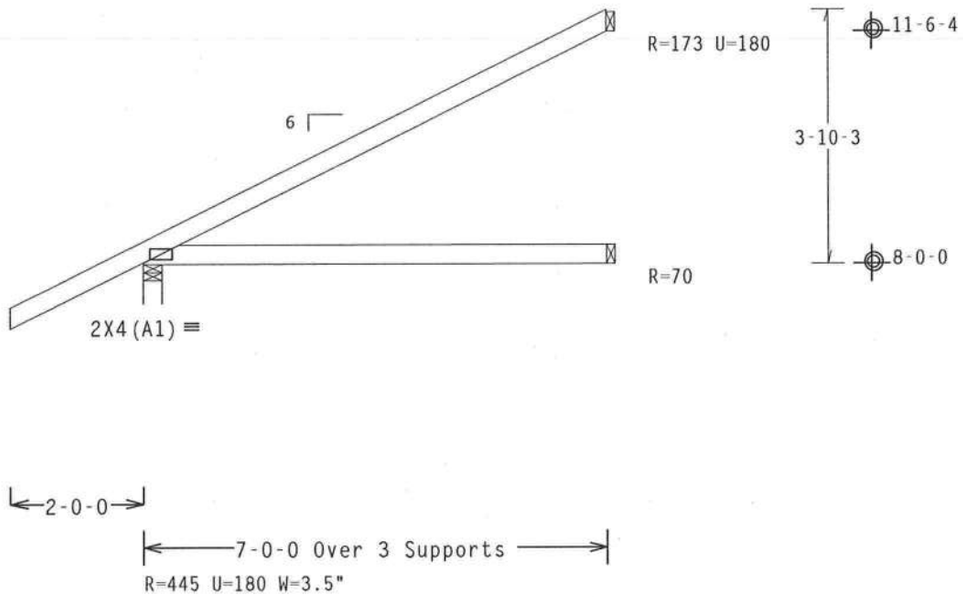

PLT TYP. Wave TPI Design Crit: TPI-1995(STD)/FBC 7.04.0805 QTY:25 FL/-/4/-/-/R/- Scale =.375"/Ft.

ALPINE
Alpine Engineered Products, Inc
1950 Marley Drive
Haines City, FL 33844
FL Certificate of Authorization # 567

WARNING TRUSSES REQUIRE EXTREME CARE IN FABRICATION, HANDLING, SHIPPING, INSTALLING AND BRACING. REFER TO BCSI 1-03 (BUILDING COMPONENT SAFETY INFORMATION), PUBLISHED BY TPI (TRUSS PLATE INSTITUTE, 583 D'ONOFRIO DR., SUITE 200, MADISON, WI 53719) AND WTCA (WOOD TRUSS COUNCIL OF AMERICA, 6300 ENTERPRISE LN, MADISON, WI 53719) FOR SAFETY PRACTICES PRIOR TO PERFORMING THESE FUNCTIONS. UNLESS OTHERWISE INDICATED, TOP CHORD SHALL HAVE PROPERLY ATTACHED STRUCTURAL PANELS AND BOTTOM CHORD SHALL HAVE A PROPERLY ATTACHED RIGID CEILING.

IMPORTANT FURNISH A COPY OF THIS DESIGN TO THE INSTALLATION CONTRACTOR. ALPINE ENGINEERED PRODUCTS, INC. SHALL NOT BE RESPONSIBLE FOR ANY DEVIATION FROM THIS DESIGN; ANY FAILURE TO BUILD THE TRUSS IN CONFORMANCE WITH TPI; OR FABRICATING, HANDLING, SHIPPING, INSTALLING & BRACING OF TRUSSES. DESIGN CONFORMS WITH APPLICABLE PROVISIONS OF NDS (NATIONAL DESIGN SPEC, BY AF&PA) AND TPI. ALPINE CONNECTOR PLATES ARE MADE OF 20/18/16GA (W,H/S/K) ASTM A653 GRADE 40/60 (W, K/H,S) GALV. STEEL. APPLY PLATES TO EACH FACE OF TRUSS AND, UNLESS OTHERWISE LOCATED ON THIS DESIGN, POSITION PER DRAWINGS 160A-Z. ANY INSPECTION OF PLATES FOLLOWED BY (1) SHALL BE PER ANNEX A3 OF TPI1-2002 SEC.3. A SEAL ON THIS DRAWING INDICATES ACCEPTANCE OF PROFESSIONAL ENGINEERING RESPONSIBILITY SOLELY FOR THE TRUSS COMPONENT DESIGN SHOWN. THE SUITABILITY AND USE OF THIS COMPONENT FOR ANY BUILDING IS THE RESPONSIBILITY OF THE BUILDING DESIGNER PER ANSI/TPI 1 SEC. 2.

ARTHUR R. FISHER LICENSE No.59687 STATE OF FLORIDA PROFESSIONAL ENGINEER
Sep 12 '05

TC LL	20.0 PSF	REF	R487-- 88085
TC DL	10.0 PSF	DATE	09/12/05
BC DL	10.0 PSF	DRW	HCUSR487 05255104
BC LL	0.0 PSF	HC-ENG	DF/AF
TOT.LD.	40.0 PSF	SEQN-	10074
DUR.FAC.	1.25	FROM	JP
SPACING	24.0"	JREF-	1SQF487_Z03

(5-399-MACK ROBINSON-LITTLE - J7)

Top chord 2x4 SP #2 Dense
Bot chord 2x4 SP #2 Dense

Deflection meets L/360 live and L/240 total load.

110 mph wind, 9.60 ft mean hgt, ASCE 7-98, CLOSED bldg, not located within 4.50 ft from roof edge, CAT II, EXP B, wind TC DL=5.0 psf, wind BC DL=5.0 psf.

Provide (2) 16d common nails(0.162"x3.5"), toe nailed at Top chord.
Provide (2) 16d common nails(0.162"x3.5"), toe nailed at Bot chord.

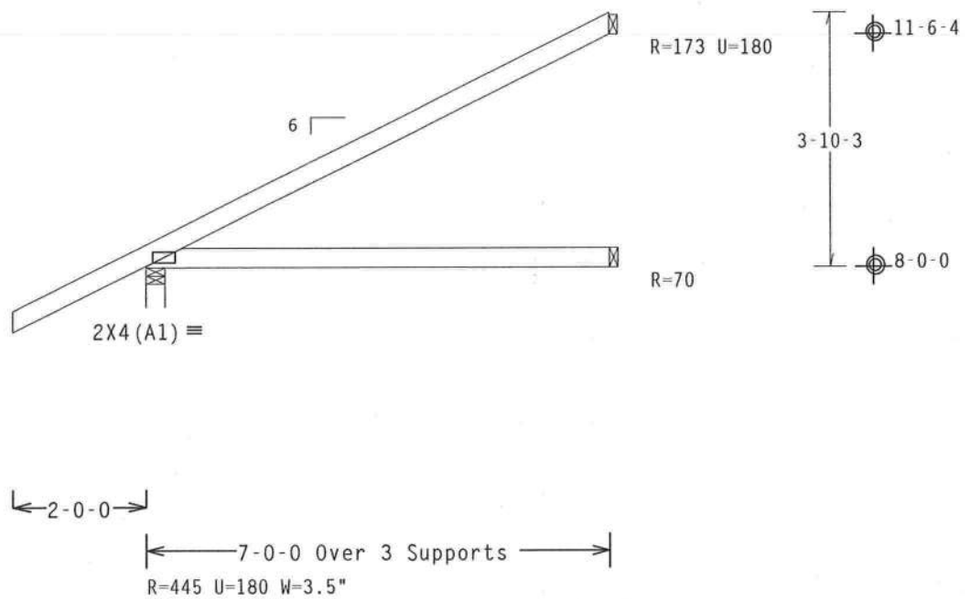

PLT TYP. Wave TPI | Design Crit: TPI-1995(STD)/FBC | 7.04.0805 | QTY:2 | FL/-/4/-/-/R/- | Scale =.375"/Ft.

ALPINE
Alpine Engineered Products, Inc
1950 Marley Drive
Haines City, FL 33844
FL Certificate of Authorization # 567

WARNING TRUSSES REQUIRE EXTREME CARE IN FABRICATION, HANDLING, SHIPPING, INSTALLING AND BRACING. REFER TO BCSI 1-03 (BUILDING COMPONENT SAFETY INFORMATION), PUBLISHED BY TPI (TRUSS PLATE INSTITUTE, 583 D'ONOFRIO DR., SUITE 200, MADISON, WI 53719) AND WTCA (WOOD TRUSS COUNCIL OF AMERICA, 6300 ENTERPRISE LN, MADISON, WI 53719) FOR SAFETY PRACTICES PRIOR TO PERFORMING THESE FUNCTIONS. UNLESS OTHERWISE INDICATED, TOP CHORD SHALL HAVE PROPERLY ATTACHED STRUCTURAL PANELS AND BOTTOM CHORD SHALL HAVE A PROPERLY ATTACHED RIGID CEILING.

IMPORTANT FURNISH A COPY OF THIS DESIGN TO THE INSTALLATION CONTRACTOR. ALPINE ENGINEERED PRODUCTS, INC. SHALL NOT BE RESPONSIBLE FOR ANY DEVIATION FROM THIS DESIGN; ANY FAILURE TO BUILD THE TRUSS IN CONFORMANCE WITH TPI; OR FABRICATING, HANDLING, SHIPPING, INSTALLING & BRACING OF TRUSSES. DESIGN CONFORMS WITH APPLICABLE PROVISIONS OF NDS (NATIONAL DESIGN SPEC. BY AF&PA) AND TPI. ALPINE CONNECTOR PLATES ARE MADE OF 20/18/16GA (W,H/S/K) ASTM A653 GRADE 40/60 (W, K/H,S) GALV. STEEL. APPLY PLATES TO EACH FACE OF TRUSS AND, UNLESS OTHERWISE LOCATED ON THIS DESIGN, POSITION PER DRAWINGS 160A-Z. ANY INSPECTION OF PLATES FOLLOWED BY (I) SHALL BE PER ANNEX A3 OF TPI1-2002 SEC.3. A SEAL ON THIS DRAWING INDICATES ACCEPTANCE OF PROFESSIONAL ENGINEERING RESPONSIBILITY SOLELY FOR THE TRUSS COMPONENT DESIGN SHOWN. THE SUITABILITY AND USE OF THIS COMPONENT FOR ANY BUILDING IS THE RESPONSIBILITY OF THE BUILDING DESIGNER PER ANSI/TPI 1 SEC. 2.

ARTHUR R. FISHER LICENSE No. 69687 STATE OF FLORIDA PROFESSIONAL ENGINEER
Sep 12 '05

TC LL	20.0 PSF	REF	R487-- 88086
TC DL	10.0 PSF	DATE	09/12/05
BC DL	10.0 PSF	DRW	HCUSR487 05255105
BC LL	0.0 PSF	HC-ENG	DF/AF
TOT.LD.	40.0 PSF	SEQN-	31706
DUR.FAC.	1.25	FROM	JP
SPACING	24.0"	JREF-	1SQF487_Z03

(5-399-MACK ROBINSON-LITTLE - J5)

Top chord 2x4 SP #2 Dense
Bot chord 2x4 SP #2 Dense

Deflection meets L/360 live and L/240 total load.

110 mph wind, 9.10 ft mean hgt, ASCE 7-98, CLOSED bldg, not located within 4.50 ft from roof edge, CAT II, EXP B, wind TC DL=5.0 psf, wind BC DL=5.0 psf.

Provide (2) 16d common nails(0.162"x3.5"), toe nailed at Top chord.
Provide (2) 16d common nails(0.162"x3.5"), toe nailed at Bot chord.

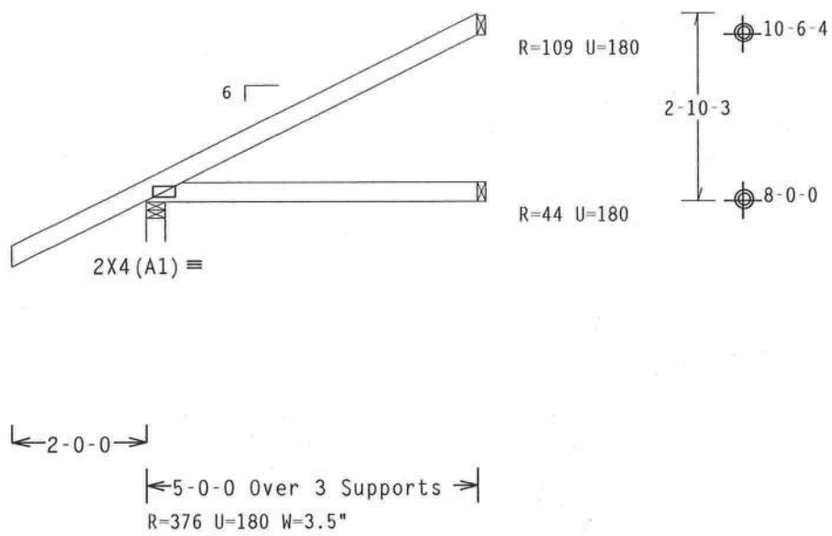

PLT TYP. Wave TPI Design Crit: TPI-1995(STD)/FBC 7.04.0805 QTY:12 FL/-/4/-/-/R/- Scale =.375"/Ft.

ALPINE
Alpine Engineered Products, Inc.
1950 Marley Drive
Haines City, FL 33844
FL Certificate of Authorization # 567

WARNING TRUSSES REQUIRE EXTREME CARE IN FABRICATION, HANDLING, SHIPPING, INSTALLING AND BRACING. REFER TO BCSI 1-03 (BUILDING COMPONENT SAFETY INFORMATION), PUBLISHED BY TPI (TRUSS PLATE INSTITUTE, 583 D'ONOFRIO DR., SUITE 200, MADISON, WI 53719) AND WTCA (WOOD TRUSS COUNCIL OF AMERICA, 6300 ENTERPRISE LN, MADISON, WI 53719) FOR SAFETY PRACTICES PRIOR TO PERFORMING THESE FUNCTIONS. UNLESS OTHERWISE INDICATED, TOP CHORD SHALL HAVE PROPERLY ATTACHED STRUCTURAL PANELS AND BOTTOM CHORD SHALL HAVE A PROPERLY ATTACHED RIGID CEILING.

IMPORTANT FURNISH A COPY OF THIS DESIGN TO THE INSTALLATION CONTRACTOR. ALPINE ENGINEERED PRODUCTS, INC. SHALL NOT BE RESPONSIBLE FOR ANY DEVIATION FROM THIS DESIGN; ANY FAILURE TO BUILD THE TRUSS IN CONFORMANCE WITH TPI; OR FABRICATING, HANDLING, SHIPPING, INSTALLING & BRACING OF TRUSSES. DESIGN CONFORMS WITH APPLICABLE PROVISIONS OF NDS (NATIONAL DESIGN SPEC, BY AF&PA) AND TPI. ALPINE CONNECTOR PLATES ARE MADE OF 20/18/16GA (W,H/S/K) ASTM A653 GRADE 40/60 (W, K/H,S) GALV. STEEL. APPLY PLATES TO EACH FACE OF TRUSS AND, UNLESS OTHERWISE LOCATED ON THIS DESIGN, POSITION PER DRAWINGS 160A-Z. ANY INSPECTION OF PLATES FOLLOWED BY (1) SHALL BE PER ANNEX A3 OF TPI1-2002 SEC.3. A SEAL ON THIS DRAWING INDICATES ACCEPTANCE OF PROFESSIONAL ENGINEERING RESPONSIBILITY SOLELY FOR THE TRUSS COMPONENT DESIGN SHOWN. THE SUITABILITY AND USE OF THIS COMPONENT FOR ANY BUILDING IS THE RESPONSIBILITY OF THE BUILDING DESIGNER PER ANSI/TPI 1 SEC. 2.

ARTHUR R. FISHER LICENSE No.59687 STATE OF FLORIDA PROFESSIONAL ENGINEER
Sep 12 '05

TC LL	20.0 PSF	REF R487-- 88087
TC DL	10.0 PSF	DATE 09/12/05
BC DL	10.0 PSF	DRW HCUSR487 05255106
BC LL	0.0 PSF	HC-ENG DF/AF
TOT.LD.	40.0 PSF	SEQN- 10079
DUR.FAC.	1.25	FROM JP
SPACING	24.0"	JREF- 1SQF487_Z03

(5-399-MACK ROBINSON-LITTLE - J3)

Top chord 2x4 SP #2 Dense
Bot chord 2x4 SP #2 Dense

Deflection meets L/360 live and L/240 total load.

110 mph wind, 8.60 ft mean hgt, ASCE 7-98, CLOSED bldg, Located anywhere in roof, CAT II, EXP B, wind TC DL=5.0 psf, wind BC DL=5.0 psf.

Provide (2) 16d common nails(0.162"x3.5"), toe nailed at Top chord.
Provide (2) 16d common nails(0.162"x3.5"), toe nailed at Bot chord.

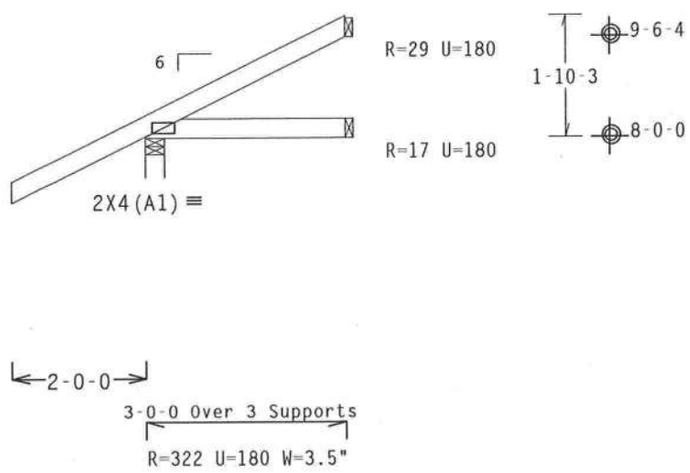

PLT TYP. Wave TPI | Design Crit: TPI-1995(STD)/FBC | 7.04.0805 | QTY:12 FL/-/4/-/-/R/- | Scale =.375"/Ft.

ALPINE
Alpine Engineered Products, Inc
1950 Marley Drive
Haines City, FL 33844
FL Certificate of Authorization # 567

WARNING TRUSSES REQUIRE EXTREME CARE IN FABRICATION, HANDLING, SHIPPING, INSTALLING AND BRACING. REFER TO BCSI 1-03 (BUILDING COMPONENT SAFETY INFORMATION), PUBLISHED BY TPI (TRUSS PLATE INSTITUTE, 583 D'ONOFRIO DR., SUITE 200, MADISON, WI 53719) AND WTCA (WOOD TRUSS COUNCIL OF AMERICA, 6300 ENTERPRISE LN, MADISON, WI 53719) FOR SAFETY PRACTICES PRIOR TO PERFORMING THESE FUNCTIONS. UNLESS OTHERWISE INDICATED, TOP CHORD SHALL HAVE PROPERLY ATTACHED STRUCTURAL PANELS AND BOTTOM CHORD SHALL HAVE A PROPERLY ATTACHED RIGID CEILING.

IMPORTANT FURNISH A COPY OF THIS DESIGN TO THE INSTALLATION CONTRACTOR. ALPINE ENGINEERED PRODUCTS, INC. SHALL NOT BE RESPONSIBLE FOR ANY DEVIATION FROM THIS DESIGN; ANY FAILURE TO BUILD THE TRUSS IN CONFORMANCE WITH TPI: OR FABRICATING, HANDLING, SHIPPING, INSTALLING & BRACING OF TRUSSES. DESIGN CONFORMS WITH APPLICABLE PROVISIONS OF NDS (NATIONAL DESIGN SPEC, BY AF&PA) AND TPI. ALPINE CONNECTOR PLATES ARE MADE OF 20/18/16GA (W,H/S/K) ASTM A653 GRADE 40/60 (W, K/H,S) GALV. STEEL. APPLY PLATES TO EACH FACE OF TRUSS AND, UNLESS OTHERWISE LOCATED ON THIS DESIGN, POSITION PER DRAWINGS 160A-Z. ANY INSPECTION OF PLATES FOLLOWED BY (1) SHALL BE PER ANNEX A3 OF TPI1-2002 SEC.3. A SEAL ON THIS DRAWING INDICATES ACCEPTANCE OF PROFESSIONAL ENGINEERING RESPONSIBILITY SOLELY FOR THE TRUSS COMPONENT DESIGN SHOWN. THE SUITABILITY AND USE OF THIS COMPONENT FOR ANY BUILDING IS THE RESPONSIBILITY OF THE BUILDING DESIGNER PER ANSI/TPI 1 SEC. 2.

ARTHUR R. FISHER LICENSE No. 59687 STATE OF FLORIDA PROFESSIONAL ENGINEER

Sep 12 '05

TC LL	20.0 PSF	REF	R487-- 88088
TC DL	10.0 PSF	DATE	09/12/05
BC DL	10.0 PSF	DRW	HCUSR487 05255090
BC LL	0.0 PSF	HC-ENG	DF/AF *
TOT.LD.	40.0 PSF	SEQN-	10084
DUR.FAC.	1.25	FROM	JP
SPACING	24.0"	JREF-	1SQF487_Z03

(5-399-MACK ROBINSON-LITTLE - J1)

Top chord 2x4 SP #2 Dense
Bot chord 2x4 SP #2 Dense

110 mph wind, 8.10 ft mean hgt, ASCE 7-98, CLOSED bldg, Located anywhere in roof, CAT II, EXP B, wind TC DL=5.0 psf, wind BC DL=5.0 psf.

** Negative reaction(s) of -190# MAX. (See below) from a non-wind load case requires uplift connection.

Deflection meets L/360 live and L/240 total load.

Provide (2) 16d common nails(0.162"x3.5"), toe nailed at Top chord.
Provide (2) 16d common nails(0.162"x3.5"), toe nailed at Bot chord.

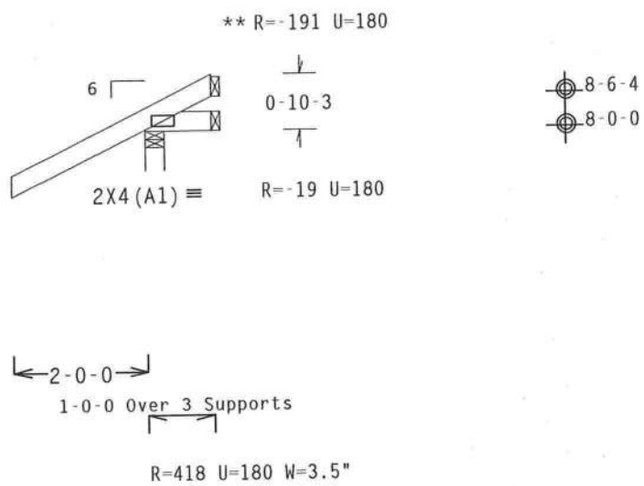

PLT TYP. Wave TPI

Design Crit: TPI-1995(STD)/FBC 7.04.0805

QTY:12 FL/-/4/-/-/R/-

Scale =.375"/Ft.

ALPINE
Alpine Engineered Products, Inc
1950 Marley Drive
Haines City, FL 33844

WARNING TRUSSES REQUIRE EXTREME CARE IN FABRICATION, HANDLING, SHIPPING, INSTALLING AND BRACING. REFER TO BCSI 1-03 (BUILDING COMPONENT SAFETY INFORMATION), PUBLISHED BY TPI (TRUSS PLATE INSTITUTE, 583 D'ONOFRIO DR., SUITE 200, MADISON, WI 53719) AND WTCA (WOOD TRUSS COUNCIL OF AMERICA, 6300 ENTERPRISE LN, MADISON, WI 53719) FOR SAFETY PRACTICES PRIOR TO PERFORMING THESE FUNCTIONS. UNLESS OTHERWISE INDICATED, TOP CHORD SHALL HAVE PROPERLY ATTACHED STRUCTURAL PANELS AND BOTTOM CHORD SHALL HAVE A PROPERLY ATTACHED RIGID CEILING.

IMPORTANT FURNISH A COPY OF THIS DESIGN TO THE INSTALLATION CONTRACTOR. ALPINE ENGINEERED PRODUCTS, INC. SHALL NOT BE RESPONSIBLE FOR ANY DEVIATION FROM THIS DESIGN; ANY FAILURE TO BUILD THE TRUSS IN CONFORMANCE WITH TPI; OR FABRICATING, HANDLING, SHIPPING, INSTALLING & BRACING OF TRUSSES. DESIGN CONFORMS WITH APPLICABLE PROVISIONS OF NDS (NATIONAL DESIGN SPEC. BY AF&PA) AND TPI. ALPINE CONNECTOR PLATES ARE MADE OF 20/18/16GA (W,H/S/K) ASTM A653 GRADE 40/60 (W, K/H,S) GALV. STEEL. APPLY PLATES TO EACH FACE OF TRUSS AND, UNLESS OTHERWISE LOCATED ON THIS DESIGN, POSITION PER DRAWINGS 160A-2. ANY INSPECTION OF PLATES FOLLOWED BY (1) SHALL BE PER ANNEX A3 OF TPI1-2002 SEC.3. A SEAL ON THIS DRAWING INDICATES ACCEPTANCE OF PROFESSIONAL ENGINEERING RESPONSIBILITY SOLELY FOR THE TRUSS COMPONENT DESIGN SHOWN. THE SUITABILITY AND USE OF THIS COMPONENT FOR ANY BUILDING IS THE RESPONSIBILITY OF THE BUILDING DESIGNER PER ANSI/TPI 1 SEC. 2.

ARTHUR R. FISHER
LICENSE
No. 59687
STATE OF
FLORIDA
PROFESSIONAL ENGINEER

Sep 12 '05

TC LL	20.0 PSF	REF R487-- 88089
TC DL	10.0 PSF	DATE 09/12/05
BC DL	10.0 PSF	DRW HCUSR487 05255107
BC LL	0.0 PSF	HC-ENG DF/AF
TOT.LD.	40.0 PSF	SEQN- 10087
DUR.FAC.	1.25	FROM JP
SPACING	24.0"	JREF- 1SQF487_Z03

(5-399-MACK ROBINSON-LITTLE - MA)

Top chord 2x4 SP #2 Dense
Bot chord 2x4 SP #2 Dense
Webs 2x4 SP #3

Deflection meets L/360 live and L/240 total load.

110 mph wind, 9.92 ft mean hgt, ASCE 7-98, CLOSED bldg, not located within 4.50 ft from roof edge, CAT II, EXP B, wind TC DL=5.0 psf, wind BC DL=5.0 psf.

Right end vertical not exposed to wind pressure.

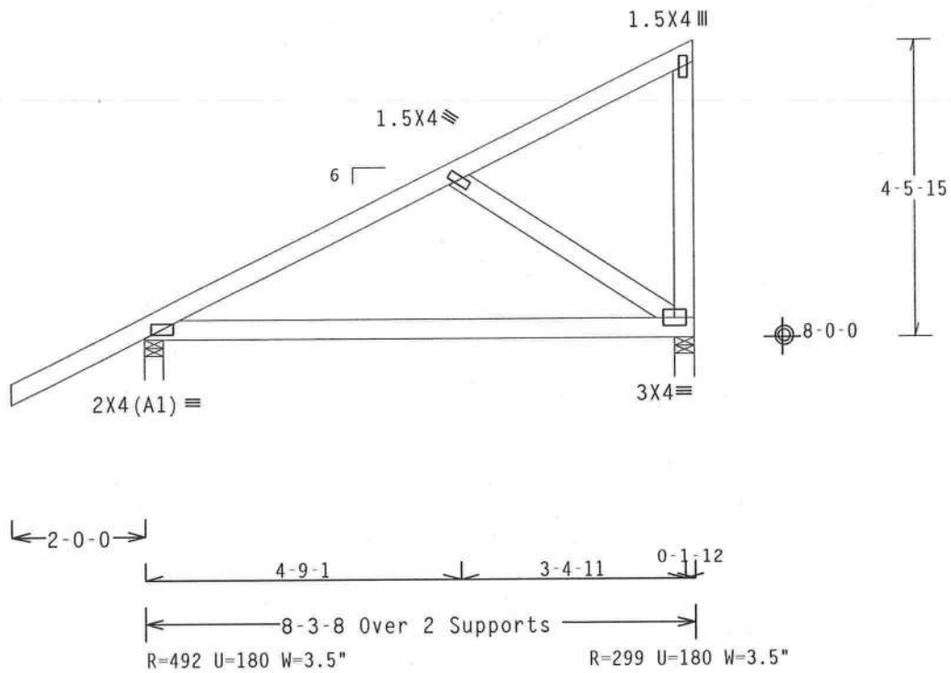

PLT TYP. Wave TPI | Design Crit: TPI-1995(STD)/FBC | 7.04.0805 | QTY:2 | FL/-/4/-/-/R/- | Scale =.375"/Ft.

ALPINE
Alpine Engineered Products, Inc
1950 Marley Drive
Haines City, FL 33844
FL Certificate of Authorization # 567

WARNING TRUSSES REQUIRE EXTREME CARE IN FABRICATION, HANDLING, SHIPPING, INSTALLING AND BRACING. REFER TO BCSI 1-03 (BUILDING COMPONENT SAFETY INFORMATION), PUBLISHED BY TPI (TRUSS PLATE INSTITUTE, 583 D'ONOFRIO DR., SUITE 200, MADISON, WI 53719) AND WTCA (WOOD TRUSS COUNCIL OF AMERICA, 6300 ENTERPRISE LN, MADISON, WI 53719) FOR SAFETY PRACTICES PRIOR TO PERFORMING THESE FUNCTIONS. UNLESS OTHERWISE INDICATED, TOP CHORD SHALL HAVE PROPERLY ATTACHED STRUCTURAL PANELS AND BOTTOM CHORD SHALL HAVE A PROPERLY ATTACHED RIGID CEILING.

IMPORTANT FURNISH A COPY OF THIS DESIGN TO THE INSTALLATION CONTRACTOR. ALPINE ENGINEERED PRODUCTS, INC. SHALL NOT BE RESPONSIBLE FOR ANY DEVIATION FROM THIS DESIGN; ANY FAILURE TO BUILD THE TRUSS IN CONFORMANCE WITH TPI; OR FABRICATING, HANDLING, SHIPPING, INSTALLING & BRACING OF TRUSSES. DESIGN CONFORMS WITH APPLICABLE PROVISIONS OF NDS (NATIONAL DESIGN SPEC, BY AF&PA) AND TPI. ALPINE CONNECTOR PLATES ARE MADE OF 20/18/16GA (W,H/S/K) ASTM A653 GRADE 40/60 (W, K/H,S) GALV. STEEL. APPLY PLATES TO EACH FACE OF TRUSS AND, UNLESS OTHERWISE LOCATED ON THIS DESIGN, POSITION PER DRAWINGS 160A-Z. ANY INSPECTION OF PLATES FOLLOWED BY (1) SHALL BE PER ANNEX A3 OF TPI1-2002 SEC.3. A SEAL ON THIS DRAWING INDICATES ACCEPTANCE OF PROFESSIONAL ENGINEERING RESPONSIBILITY SOLELY FOR THE TRUSS COMPONENT DESIGN SHOWN. THE SUITABILITY AND USE OF THIS COMPONENT FOR ANY BUILDING IS THE RESPONSIBILITY OF THE BUILDING DESIGNER PER ANSI/TPI 1 SEC. 2.

ARTHUR R. FISHER LICENSE No. 59687 STATE OF FLORIDA PROFESSIONAL ENGINEER
Sep 12 '05

TC LL	20.0 PSF	REF	R487-- 88090
TC DL	10.0 PSF	DATE	09/12/05
BC DL	10.0 PSF	DRW	HCUSR487 05255091
BC LL	0.0 PSF	HC-ENG	DF/AF *
TOT.LD.	40.0 PSF	SEQN-	31714
DUR.FAC.	1.25	FROM	JP
SPACING	24.0"	JREF-	1SQF487_Z03

(5-399-MACK ROBINSON-LITTLE - AP1)

Top chord 2x4 SP #2 Dense
Bot chord 2x4 SP #2 Dense
Webs 2x4 SP #3

Deflection meets L/360 live and L/240 total load.

Refer to DWG PIGBACKA1103 or PIGBACKB1103 for piggyback details.
PORTION OF TRUSS UNDER PIGGYBACK IS TO BE BRACED @ 24" OC,
UNLESS OTHERWISE SPECIFIED.

110 mph wind, 8.50 ft mean hgt, ASCE 7-98, CLOSED bldg, not located within 4.50 ft from roof edge, CAT II, EXP B, wind TC DL=5.0 psf, wind BC DL=5.0 psf.

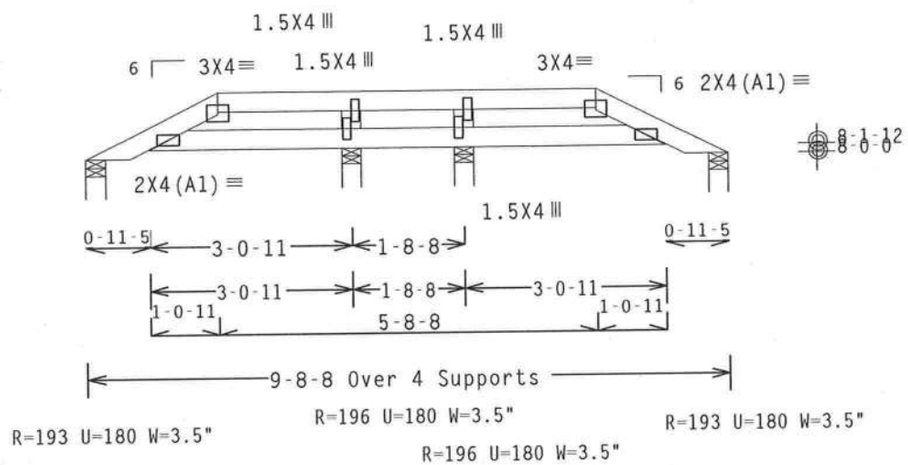

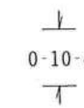

PLT TYP. Wave TPI | Design Crit: TPI-1995(STD)/FBC | 7.04.0805.1 | QTY:1 | FL/-/4/-/-/R/- | Scale =.375"/Ft.

ALPINE
Alpine Engineered Products, Inc.
1950 Marley Drive
Haines City, FL 33844
FL Certificate of Authorization # 567

WARNING TRUSSES REQUIRE EXTREME CARE IN FABRICATION, HANDLING, SHIPPING, INSTALLING AND BRACING. REFER TO BCSI 1-03 (BUILDING COMPONENT SAFETY INFORMATION), PUBLISHED BY TPI (TRUSS PLATE INSTITUTE, 583 D'ONOFRIO DR., SUITE 200, MADISON, WI 53719) AND WTCA (WOOD TRUSS COUNCIL OF AMERICA, 6300 ENTERPRISE LN, MADISON, WI 53719) FOR SAFETY PRACTICES PRIOR TO PERFORMING THESE FUNCTIONS. UNLESS OTHERWISE INDICATED, TOP CHORD SHALL HAVE PROPERLY ATTACHED STRUCTURAL PANELS AND BOTTOM CHORD SHALL HAVE A PROPERLY ATTACHED RIGID CEILING.

IMPORTANT FURNISH A COPY OF THIS DESIGN TO THE INSTALLATION CONTRACTOR. ALPINE ENGINEERED PRODUCTS, INC. SHALL NOT BE RESPONSIBLE FOR ANY DEVIATION FROM THIS DESIGN; ANY FAILURE TO BUILD THE TRUSS IN CONFORMANCE WITH TPI1: OR FABRICATING, HANDLING, SHIPPING, INSTALLING & BRACING OF TRUSSES. DESIGN CONFORMS WITH APPLICABLE PROVISIONS OF NDS (NATIONAL DESIGN SPEC. BY AF&PA) AND TPI. ALPINE CONNECTOR PLATES ARE MADE OF 20/18/16GA (W,H/S/K) ASTM A653 GRADE 40/60 (W, K/H,S) GALV. STEEL. APPLY PLATES TO EACH FACE OF TRUSS AND, UNLESS OTHERWISE LOCATED ON THIS DESIGN, POSITION PER DRAWINGS 160A-Z. ANY INSPECTION OF PLATES FOLLOWED BY (1) SHALL BE PER ANNEX A3 OF TPI1-2002 SEC.3. A SEAL ON THIS DRAWING INDICATES ACCEPTANCE OF PROFESSIONAL ENGINEERING RESPONSIBILITY SOLELY FOR THE TRUSS COMPONENT DESIGN SHOWN. THE SUITABILITY AND USE OF THIS COMPONENT FOR ANY BUILDING IS THE RESPONSIBILITY OF THE BUILDING DESIGNER PER ANSI/TPI 1 SEC. 2.

ARTHUR R. FISHER LICENSE No. 59687 STATE OF FLORIDA PROFESSIONAL ENGINEER
Sep 12 '05

TC LL	20.0 PSF	REF	R487-- 88091
TC DL	10.0 PSF	DATE	09/12/05
BC DL	10.0 PSF	DRW	HCUSR487 05255108
BC LL	0.0 PSF	HC-ENG	DF/AF
TOT.LD.	40.0 PSF	SEQN-	31963
DUR.FAC.	1.25	FROM	JP
SPACING	24.0"	JREF-	1SQF487_Z03

(5-399-MACK ROBINSON-LITTLE - AP2)

Top chord 2x4 SP #2 Dense
Bot chord 2x4 SP #2 Dense
Webs 2x4 SP #3

Deflection meets L/360 live and L/240 total load.

Refer to DWG PIGBACKA1103 or PIGBACKB1103 for piggyback details.
PORTION OF TRUSS UNDER PIGGYBACK IS TO BE BRACED @ 24" OC,
UNLESS OTHERWISE SPECIFIED.

110 mph wind, 9.00 ft mean hgt, ASCE 7-98, CLOSED bldg, not located within 4.50 ft from roof edge, CAT II, EXP B, wind TC DL=5.0 psf, wind BC DL=5.0 psf.

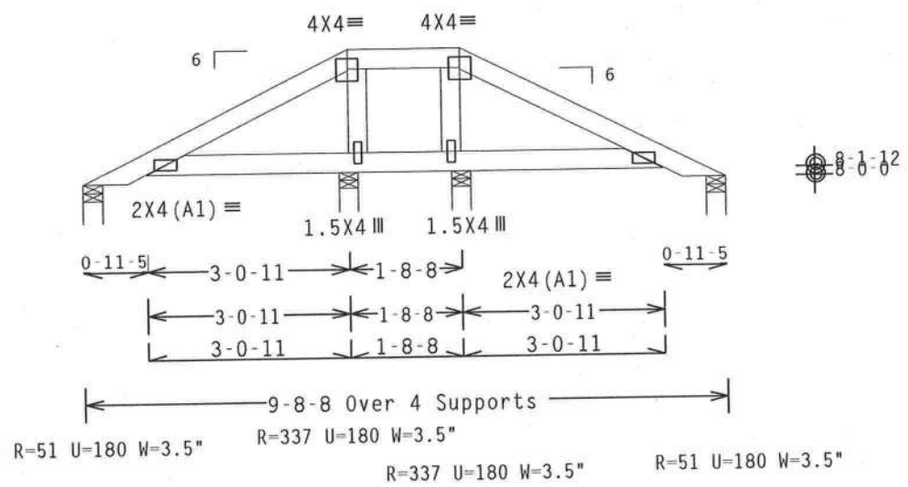

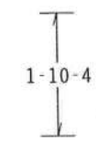

PLT TYP. Wave TPI | Design Crit: TPI-1995(STD)/FBC | 7.04.0805 | QTY:1 | FL/-/4/-/-/R/- | Scale =.375"/Ft.

ALPINE
Alpine Engineered Products, Inc
1950 Marley Drive
Haines City, FL 33844

WARNING TRUSSES REQUIRE EXTREME CARE IN FABRICATION, HANDLING, SHIPPING, INSTALLING AND BRACING. REFER TO BCSI 1-03 (BUILDING COMPONENT SAFETY INFORMATION), PUBLISHED BY TPI (TRUSS PLATE INSTITUTE, 583 D'ONOFRIO DR., SUITE 200, MADISON, WI 53719) AND WTCA (WOOD TRUSS COUNCIL OF AMERICA, 6300 ENTERPRISE LN. MADISON, WI 53719) FOR SAFETY PRACTICES PRIOR TO PERFORMING THESE FUNCTIONS. UNLESS OTHERWISE INDICATED, TOP CHORD SHALL HAVE PROPERLY ATTACHED STRUCTURAL PANELS AND BOTTOM CHORD SHALL HAVE A PROPERLY ATTACHED RIGID CEILING.

IMPORTANTFURNISH A COPY OF THIS DESIGN TO THE INSTALLATION CONTRACTOR. ALPINE ENGINEERED PRODUCTS, INC. SHALL NOT BE RESPONSIBLE FOR ANY DEVIATION FROM THIS DESIGN; ANY FAILURE TO BUILD THE TRUSS IN CONFORMANCE WITH TPI; OR FABRICATING, HANDLING, SHIPPING, INSTALLING & BRACING OF TRUSSES. DESIGN CONFORMS WITH APPLICABLE PROVISIONS OF NDS (NATIONAL DESIGN SPEC. BY AF&PA) AND TPI. ALPINE CONNECTOR PLATES ARE MADE OF 20/18/16GA (W,H/S/K) ASTM A653 GRADE 40/60 (W, K/H,S) GALV. STEEL. APPLY PLATES TO EACH FACE OF TRUSS AND, UNLESS OTHERWISE LOCATED ON THIS DESIGN, POSITION PER DRAWINGS 160A-Z. ANY INSPECTION OF PLATES FOLLOWED BY (1) SHALL BE PER ANNEX A3 OF TPI1-2002 SEC.3. A SEAL ON THIS DRAWING INDICATES ACCEPTANCE OF PROFESSIONAL ENGINEERING RESPONSIBILITY SOLELY FOR THE TRUSS COMPONENT DESIGN SHOWN. THE SUITABILITY AND USE OF THIS COMPONENT FOR ANY BUILDING IS THE RESPONSIBILITY OF THE BUILDING DESIGNER PER ANSI/TPI 1 SEC. 2.

ARTHUR R. FISHER LICENSE No. 59687 STATE OF FLORIDA PROFESSIONAL ENGINEER
Sep 12 '05

TC LL	20.0 PSF	REF	R487-- 88092
TC DL	10.0 PSF	DATE	09/12/05
BC DL	10.0 PSF	DRW	HCUSR487 05255109
BC LL	0.0 PSF	HC-ENG	DF/AF
TOT.LD.	40.0 PSF	SEQN-	31966
DUR.FAC.	1.25	FROM	JP
SPACING	24.0"	JREF-	1SQF487_Z03

(5-399-MACK ROBINSON-LITTLE - AP3)

Top chord 2x4 SP #2 Dense
Bot chord 2x4 SP #2 Dense
Webs 2x4 SP #3

Deflection meets L/360 live and L/240 total load.

Refer to DWG PIGBACKA1103 or PIGBACKB1103 for piggyback details.
PORTION OF TRUSS UNDER PIGGYBACK IS TO BE BRACED @ 24" OC,
UNLESS OTHERWISE SPECIFIED.

110 mph wind, 9.21 ft mean hgt, ASCE 7-98, CLOSED bldg, not located within 4.50 ft from roof edge, CAT II, EXP B, wind TC DL=5.0 psf, wind BC DL=5.0 psf.

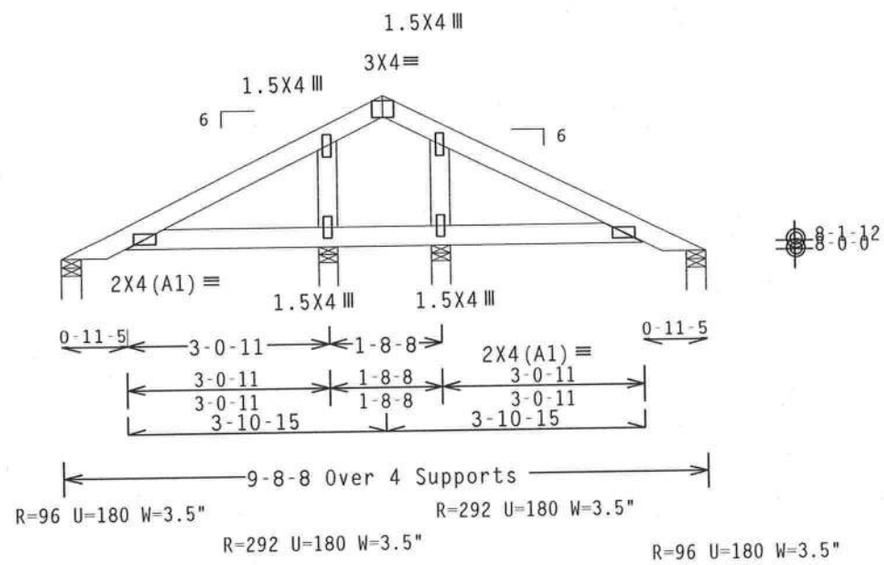

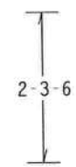

PLT TYP. Wave TPI | Design Crit: TPI-1995(STD)/FBC | 7.04.0805 | QTY:5 | FL/-/4/-/-/R/- | Scale =.375"/Ft.

ALPINE
Alpine Engineered Products, Inc.
1950 Marley Drive
Haines City, FL 33844

WARNING TRUSSES REQUIRE EXTREME CARE IN FABRICATION, HANDLING, SHIPPING, INSTALLING AND BRACING. REFER TO BCSI 1-03 (BUILDING COMPONENT SAFETY INFORMATION), PUBLISHED BY TPI (TRUSS PLATE INSTITUTE, 583 D'ONOFRIO DR., SUITE 200, MADISON, WI 53719) AND WTCA (WOOD TRUSS COUNCIL OF AMERICA, 6300 ENTERPRISE LN, MADISON, WI 53719) FOR SAFETY PRACTICES PRIOR TO PERFORMING THESE FUNCTIONS. UNLESS OTHERWISE INDICATED, TOP CHORD SHALL HAVE PROPERLY ATTACHED STRUCTURAL PANELS AND BOTTOM CHORD SHALL HAVE A PROPERLY ATTACHED RIGID CEILING.

IMPORTANT FURNISH A COPY OF THIS DESIGN TO THE INSTALLATION CONTRACTOR. ALPINE ENGINEERED PRODUCTS, INC. SHALL NOT BE RESPONSIBLE FOR ANY DEVIATION FROM THIS DESIGN; ANY FAILURE TO BUILD THE TRUSS IN CONFORMANCE WITH TPI; OR FABRICATING, HANDLING, SHIPPING, INSTALLING & BRACING OF TRUSSES. DESIGN CONFORMS WITH APPLICABLE PROVISIONS OF NDS (NATIONAL DESIGN SPEC, BY AF&PA) AND TPI. ALPINE CONNECTOR PLATES ARE MADE OF 20/18/16GA (W,H/S/K) ASTM A653 GRADE 40/60 (W, K/H,S) GALV. STEEL. APPLY PLATES TO EACH FACE OF TRUSS AND, UNLESS OTHERWISE LOCATED ON THIS DESIGN, POSITION PER DRAWINGS 160A-Z. ANY INSPECTION OF PLATES FOLLOWED BY (1) SHALL BE PER ANNEX A3 OF TPI1-2002 SEC.3. A SEAL ON THIS DRAWING INDICATES ACCEPTANCE OF PROFESSIONAL ENGINEERING RESPONSIBILITY SOLELY FOR THE TRUSS COMPONENT DESIGN SHOWN. THE SUITABILITY AND USE OF THIS COMPONENT FOR ANY BUILDING IS THE RESPONSIBILITY OF THE BUILDING DESIGNER PER ANSI/TPI 1 SEC. 2.

ARTHUR R. FISHER LICENSE No. 59687 STATE OF FLORIDA PROFESSIONAL ENGINEER
Sep 12 '05

TC LL	20.0 PSF	REF	R487-- 88093
TC DL	10.0 PSF	DATE	09/12/05
BC DL	10.0 PSF	DRW	HCUSR487 05255110
BC LL	0.0 PSF	HC-ENG	DF/AF
TOT.LD.	40.0 PSF	SEQN-	31969
DUR.FAC.	1.25	FROM	JP
SPACING	24.0"	JREF-	1SQF487_Z03

(5-399-MACK ROBINSON-LITTLE - AP4)

Top chord 2x4 SP #2 Dense
Bot chord 2x4 SP #2 Dense
Webs 2x4 SP #3

Deflection meets L/360 live and L/240 total load.

Refer to DWG PIGBACKA1103 or PIGBACKB1103 for piggyback details.
PORTION OF TRUSS UNDER PIGGYBACK IS TO BE BRACED @ 24" OC,
UNLESS OTHERWISE SPECIFIED.

110 mph wind, 8.50 ft mean hgt, ASCE 7-98, CLOSED bldg, not located within 4.50 ft from roof edge, CAT II, EXP B, wind TC DL=5.0 psf, wind BC DL=5.0 psf.

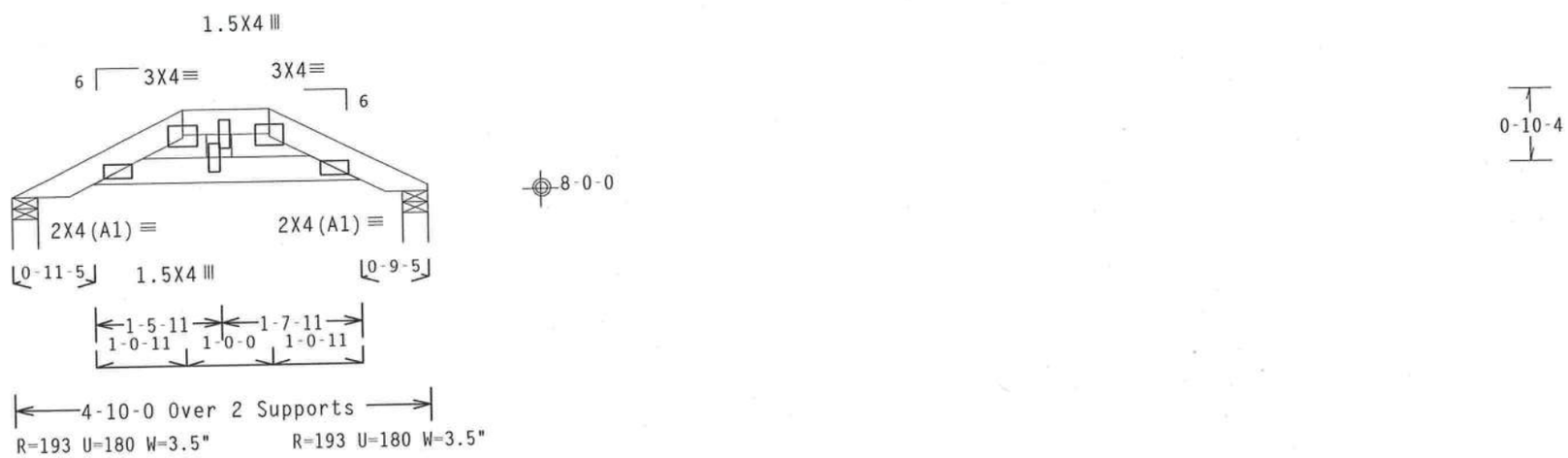

PLT TYP. Wave TPI

Design Crit: TPI-1995(STD)/FBC

7.04.0805 1

QTY:1

FL/-/4/-/-/R/-

Scale =.5"/Ft.

ALPINE

Alpine Engineered Products, Inc.
1950 Marley Drive
Haines City, FL 33844

WARNING TRUSSES REQUIRE EXTREME CARE IN FABRICATION, HANDLING, SHIPPING, INSTALLING AND BRACING. REFER TO BCSI 1-03 (BUILDING COMPONENT SAFETY INFORMATION), PUBLISHED BY TPI (TRUSS PLATE INSTITUTE, 583 D'ONOFRIO DR., SUITE 200, MADISON, WI 53719) AND WTCA (WOOD TRUSS COUNCIL OF AMERICA, 6300 ENTERPRISE LN, MADISON, WI 53719) FOR SAFETY PRACTICES PRIOR TO PERFORMING THESE FUNCTIONS. UNLESS OTHERWISE INDICATED, TOP CHORD SHALL HAVE PROPERLY ATTACHED STRUCTURAL PANELS AND BOTTOM CHORD SHALL HAVE A PROPERLY ATTACHED RIGID CEILING.

IMPORTANT FURNISH A COPY OF THIS DESIGN TO THE INSTALLATION CONTRACTOR. ALPINE ENGINEERED PRODUCTS, INC. SHALL NOT BE RESPONSIBLE FOR ANY DEVIATION FROM THIS DESIGN; ANY FAILURE TO BUILD THE TRUSS IN CONFORMANCE WITH TPI; OR FABRICATING, HANDLING, SHIPPING, INSTALLING & BRACING OF TRUSSES. DESIGN CONFORMS WITH APPLICABLE PROVISIONS OF NDS (NATIONAL DESIGN SPEC. BY AF&PA) AND TPI. ALPINE CONNECTOR PLATES ARE MADE OF 20/18/16GA (W,H/S/K) ASTM A653 GRADE 40/60 (W, K/H,S) GALV. STEEL. APPLY PLATES TO EACH FACE OF TRUSS AND, UNLESS OTHERWISE LOCATED ON THIS DESIGN, POSITION PER DRAWINGS 160A-Z. ANY INSPECTION OF PLATES FOLLOWED BY (1) SHALL BE PER ANNEX A3 OF TPI1-2002 SEC.3. A SEAL ON THIS DRAWING INDICATES ACCEPTANCE OF PROFESSIONAL ENGINEERING RESPONSIBILITY SOLELY FOR THE TRUSS COMPONENT DESIGN SHOWN. THE SUITABILITY AND USE OF THIS COMPONENT FOR ANY BUILDING IS THE RESPONSIBILITY OF THE BUILDING DESIGNER PER ANSI/TPI 1 SEC. 2.

ARTHUR R. FISHER
LICENSE
No. 59697
STATE OF
FLORIDA
PROFESSIONAL ENGINEER

Sep 12 '05

TC LL	20.0 PSF	REF R487-- 88094
TC DL	10.0 PSF	DATE 09/12/05
BC DL	10.0 PSF	DRW HCUSR487 05255111
BC LL	0.0 PSF	HC-ENG DF/AF
TOT.LD.	40.0 PSF	SEQN- 31975
DUR.FAC.	1.25	FROM JP
SPACING	24.0"	JREF- 1SQF487_Z03

CLB WEB BRACE SUBSTITUTION

THIS DETAIL IS TO BE USED WHEN CONTINUOUS LATERAL BRACING (CLB) IS SPECIFIED ON AN ALPINE TRUSS DESIGN BUT AN ALTERNATIVE WEB BRACING METHOD IS DESIRED.

NOTES:

THIS DETAIL IS ONLY APPLICABLE FOR CHANGING THE SPECIFIED CLB SHOWN ON SINGLE PLY SEALED DESIGNS TO T-BRACING OR SCAB BRACING.

ALTERNATIVE BRACING SPECIFIED IN CHART BELOW MAY BE CONSERVATIVE. FOR MINIMUM ALTERNATIVE BRACING, RE-RUN DESIGN WITH APPROPRIATE BRACING.

WEB MEMBER SIZE	SPECIFIED CLB BRACING	ALTERNATIVE BRACING T OR L-BRACE	ALTERNATIVE BRACING SCAB BRACE
2X3 OR 2X4	1 ROW	2X4	1-2X4
2X3 OR 2X4	2 ROWS	2X6	2-2X4
2X6	1 ROW	2X4	1-2X6
2X6	2 ROWS	2X6	2-2X4(*)
2X8	1 ROW	2X6	1-2X8
2X8	2 ROWS	2X6	2-2X6(*)

T-BRACE, L-BRACE AND SCAB BRACE TO BE SAME SPECIES AND GRADE OR BETTER THAN WEB MEMBER UNLESS SPECIFIED OTHERWISE ON ENGINEER'S SEALED DESIGN.

(*) CENTER SCAB ON WIDE FACE OF WEB. APPLY (1) SCAB TO EACH FACE OF WEB.

T-BRACING OR L-BRACING:

APPLY TO EITHER SIDE OF WEB NARROW FACE

ATTACH WITH 16d NAILS AT 6" O.C.

BRACE IS A MINIMUM 80% OF WEB MEMBER LENGTH

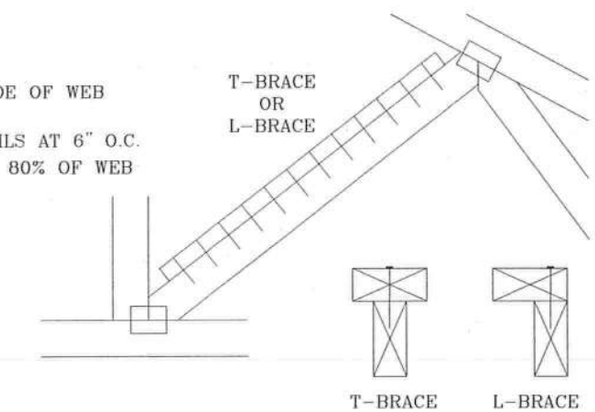

SCAB BRACING:

APPLY SCAB(S) TO WIDE FACE OF WEB.

NO MORE THAN (1) SCAB PER FACE.

ATTACH WITH 10d OR .128"x3" GUN NAILS AT 6" O.C. BRACE IS A MINIMUM 80% OF WEB MEMBER LENGTH

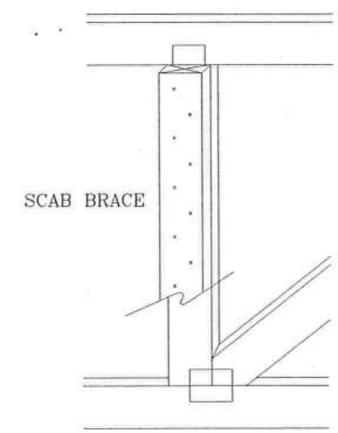

THIS DRAWING REPLACES DRAWING 579,640

ALPINE

ALPINE ENGINEERED PRODUCTS, INC.
POMPANO BEACH, FLORIDA

WARNING TRUSSES REQUIRE EXTREME CARE IN FABRICATING, HANDLING, SHIPPING, INSTALLING AND BRACING. REFER TO BCSI 1-03 (BUILDING COMPONENT SAFETY INFORMATION), PUBLISHED BY TPI (TRUSS PLATE INSTITUTE, 583 D'ONOFRIO DR., SUITE 200, MADISON, WI. 53719) AND WTCA (WOOD TRUSS COUNCIL OF AMERICA, 6300 ENTERPRISE LN, MADISON, WI 53719) FOR SAFETY PRACTICES PRIOR TO PERFORMING THESE FUNCTIONS. UNLESS OTHERWISE INDICATED, TOP CHORD SHALL HAVE PROPERLY ATTACHED STRUCTURAL PANELS AND BOTTOM CHORD SHALL HAVE A PROPERLY ATTACHED RIGID CEILING.

IMPORTANT FURNISH COPY OF THIS DESIGN TO INSTALLATION CONTRACTOR. ALPINE ENGINEERED PRODUCTS, INC., SHALL NOT BE RESPONSIBLE FOR ANY DEVIATION FROM THIS DESIGN; ANY FAILURE TO BUILD THE TRUSS IN CONFORMANCE WITH TPI; OR FABRICATING, HANDLING, SHIPPING, INSTALLING & BRACING OF TRUSSES. DESIGN CONFORMS WITH APPLICABLE PROVISIONS OF NDS (NATIONAL DESIGN SPEC. BY AF&PA) AND TPI. ALPINE CONNECTOR PLATES ARE MADE OF 20/18/16GA (W,H/S/K) ASTM A653 GRADE 40/60 (W,K/H,S) GALV. STEEL. APPLY PLATES TO EACH FACE OF TRUSS AND, UNLESS OTHERWISE LOCATED ON THIS DESIGN, POSITION PER DRAWINGS 160A-Z. ANY INSPECTION OF PLATES FOLLOWED BY (1) SHALL BE PER ANNEX A3 OF TPI 1-2002 SEC. 3. A SEAL ON THIS DRAWING INDICATES ACCEPTANCE OF PROFESSIONAL ENGINEERING RESPONSIBILITY SOLELY FOR THE TRUSS COMPONENT DESIGN SHOWN. THE SUITABILITY AND USE OF THIS COMPONENT FOR ANY BUILDING IS THE RESPONSIBILITY OF THE BUILDING DESIGNER, PER ANSI/TPI 1 SEC. 2.

ARTHUR R. FISHER
LICENSE
No. 59687
STATE OF FLORIDA
PROFESSIONAL ENGINEER

TC LL	PSF	REF	CLB SUBST.
TC DL	PSF	DATE	11/26/03
BC DL	PSF	DRWG	BRCLBSUB1103
BC LL	PSF	-ENG	MLH/KAR
TOT. LD.	PSF		
DUR. FAC.			
SPACING			

ASCE 7-98: 110 MPH WIND SPEED, 15' MEAN HEIGHT, ENCLOSED, I = 1.00, EXPOSURE C

MAX GABLE VERTICAL LENGTH	2X4 GABLE VERTICAL SPACING	SPECIES	BRACE / GRADE	NO BRACES	(1) 1X4 "L" BRACE * GROUP A	(1) 1X4 "L" BRACE * GROUP B	(1) 2X4 "L" BRACE * GROUP A	(1) 2X4 "L" BRACE * GROUP B	(2) 2X4 "L" BRACE ** GROUP A	(2) 2X4 "L" BRACE ** GROUP B	(1) 2X6 "L" BRACE * GROUP A	(1) 2X6 "L" BRACE * GROUP B	(2) 2X6 "L" BRACE ** GROUP A	(2) 2X6 "L" BRACE ** GROUP B
	24" O.C.	SPF HF	#1 / #2	3' 10"	6' 8"	6' 10"	7' 11"	8' 1"	9' 5"	9' 8"	12' 5"	12' 9"	14' 0"	14' 0"
			#3	3' 9"	6' 0"	6' 0"	7' 11"	7' 11"	9' 5"	9' 5"	12' 4"	12' 4"	14' 0"	14' 0"
			STUD	3' 9"	6' 0"	6' 0"	7' 11"	7' 11"	9' 5"	9' 5"	12' 3"	12' 3"	14' 0"	14' 0"
			STANDARD	3' 9"	5' 2"	5' 2"	6' 9"	6' 9"	9' 1"	9' 1"	10' 7"	10' 7"	14' 0"	14' 0"
		SP DFL	#1	4' 3"	6' 8"	7' 2"	7' 11"	8' 6"	9' 5"	10' 2"	12' 5"	13' 5"	14' 0"	14' 0"
			#2	4' 2"	6' 8"	7' 2"	7' 11"	8' 6"	9' 5"	10' 2"	12' 5"	13' 5"	14' 0"	14' 0"
			#3	4' 0"	6' 2"	6' 2"	7' 11"	8' 1"	9' 5"	9' 11"	12' 5"	12' 8"	14' 0"	14' 0"
			STUD	4' 0"	6' 1"	6' 1"	7' 11"	8' 0"	9' 5"	9' 11"	12' 5"	12' 6"	14' 0"	14' 0"
			STANDARD	3' 10"	5' 3"	5' 3"	6' 11"	6' 11"	9' 4"	9' 4"	10' 10"	10' 10"	14' 0"	14' 0"
	16" O.C.	SPF HF	#1 / #2	4' 5"	7' 8"	7' 10"	9' 1"	9' 4"	10' 10"	11' 1"	14' 0"	14' 0"	14' 0"	14' 0"
			#3	4' 4"	7' 4"	7' 4"	9' 1"	9' 1"	10' 10"	10' 10"	14' 0"	14' 0"	14' 0"	14' 0"
			STUD	4' 4"	7' 4"	7' 4"	9' 1"	9' 1"	10' 10"	10' 10"	14' 0"	14' 0"	14' 0"	14' 0"
			STANDARD	4' 4"	6' 4"	6' 4"	8' 4"	8' 4"	10' 10"	10' 10"	12' 11"	12' 11"	14' 0"	14' 0"
		SP DFL	#1	4' 10"	7' 8"	8' 3"	9' 1"	9' 9"	10' 10"	11' 8"	14' 0"	14' 0"	14' 0"	14' 0"
			#2	4' 9"	7' 8"	8' 3"	9' 1"	9' 9"	10' 10"	11' 8"	14' 0"	14' 0"	14' 0"	14' 0"
			#3	4' 6"	7' 7"	7' 7"	9' 1"	9' 6"	10' 10"	11' 4"	14' 0"	14' 0"	14' 0"	14' 0"
			STUD	4' 6"	7' 6"	7' 6"	9' 1"	9' 6"	10' 10"	11' 4"	14' 0"	14' 0"	14' 0"	14' 0"
			STANDARD	4' 5"	6' 5"	6' 5"	8' 6"	8' 6"	10' 10"	11' 1"	13' 3"	13' 3"	14' 0"	14' 0"
	12" O.C.	SPF HF	#1 / #2	4' 11"	8' 5"	8' 8"	10' 0"	10' 3"	11' 11"	12' 3"	14' 0"	14' 0"	14' 0"	14' 0"
			#3	4' 9"	8' 5"	8' 5"	10' 0"	10' 0"	11' 11"	11' 11"	14' 0"	14' 0"	14' 0"	14' 0"
			STUD	4' 9"	8' 5"	8' 5"	10' 0"	10' 0"	11' 11"	11' 11"	14' 0"	14' 0"	14' 0"	14' 0"
			STANDARD	4' 9"	7' 3"	7' 3"	9' 7"	9' 7"	11' 11"	11' 11"	14' 0"	14' 0"	14' 0"	14' 0"
		SP DFL	#1	5' 4"	8' 5"	9' 1"	10' 0"	10' 9"	11' 11"	12' 10"	14' 0"	14' 0"	14' 0"	14' 0"
			#2	5' 3"	8' 5"	9' 1"	10' 0"	10' 9"	11' 11"	12' 10"	14' 0"	14' 0"	14' 0"	14' 0"
			#3	5' 0"	8' 5"	8' 5"	10' 0"	10' 6"	11' 11"	12' 6"	14' 0"	14' 0"	14' 0"	14' 0"
			STUD	5' 0"	8' 5"	8' 7"	10' 0"	10' 6"	11' 11"	12' 6"	14' 0"	14' 0"	14' 0"	14' 0"
			STANDARD	4' 11"	7' 5"	7' 5"	9' 10"	9' 10"	11' 11"	12' 3"	14' 0"	14' 0"	14' 0"	14' 0"

BRACING GROUP SPECIES AND GRADES:

GROUP A:

SPRUCE-PINE-FIR: #1 / #2 STANDARD; #3 STUD

HEM-FIR: #2 STUD; #3 STANDARD

DOUGLAS FIR-LARCH: #3; STUD; STANDARD

SOUTHERN PINE: #3; STUD; STANDARD

GROUP B:

HEM-FIR: #1 & BTR; #1

SOUTHERN PINE: #1; #2

DOUGLAS FIR-LARCH: #1; #2

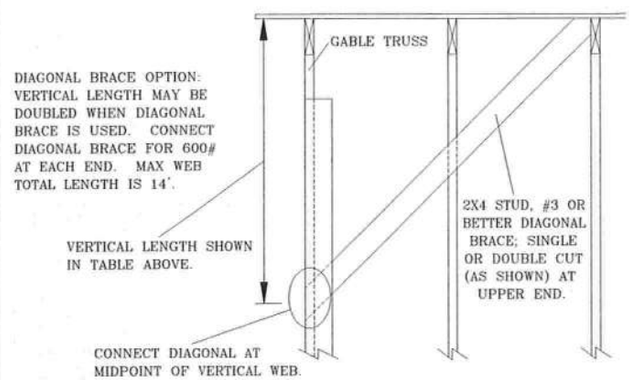

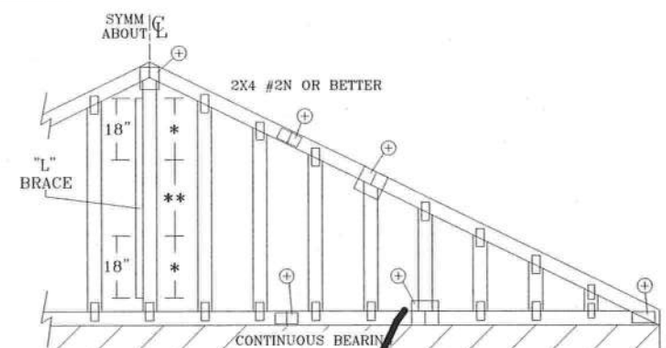

REFER TO CHART ABOVE FOR MAX GABLE VERTICAL LENGTH.

GABLE TRUSS DETAIL NOTES:

LIVE LOAD DEFLECTION CRITERIA IS L/240.

PROVIDE UPLIFT CONNECTIONS FOR 80 PLF OVER CONTINUOUS BEARING (5 PSF TC DEAD LOAD).

GABLE END SUPPORTS LOAD FROM 4' 0" OUTLOOKERS WITH 2' 0" OVERHANG, OR 12" PLYWOOD OVERHANG.

ATTACH EACH "L" BRACE WITH 10d NAILS.
* FOR (1) "L" BRACE: SPACE NAILS AT 2" O.C. IN 18" END ZONES AND 4" O.C. BETWEEN ZONES.
** FOR (2) "L" BRACES: SPACE NAILS AT 3" O.C. IN 18" END ZONES AND 6" O.C. BETWEEN ZONES.

"L" BRACING MUST BE A MINIMUM OF 80% OF WEB MEMBER LENGTH.

GABLE VERTICAL PLATE SIZES

VERTICAL LENGTH	NO SPLICE
LESS THAN 4' 0"	1X4 OR 2X3
GREATER THAN 4' 0", BUT LESS THAN 11' 6"	2X4
GREATER THAN 11' 6"	2.5X4

+ REFER TO COMMON TRUSS DESIGN FOR PEAK, SPLICE, AND HEEL PLATES.

ALPINE

ALPINE ENGINEERED PRODUCTS, INC.
POMPANO BEACH, FLORIDA

WARNING TRUSSES REQUIRE EXTREME CARE IN FABRICATING, HANDLING, SHIPPING, INSTALLING AND BRACING. REFER TO BCSI 1-03 (BUILDING COMPONENT SAFETY INFORMATION), PUBLISHED BY TPI (TRUSS PLATE INSTITUTE, 583 D'ONOFRIO DR., SUITE 200, MADISON, WI 53719) AND WTCA (WOOD TRUSS COUNCIL OF AMERICA, 6300 ENTERPRISE LN, MADISON, WI 53719) FOR SAFETY PRACTICES PRIOR TO PERFORMING THESE FUNCTIONS. UNLESS OTHERWISE INDICATED, TOP CHORD SHALL HAVE PROPERLY ATTACHED STRUCTURAL PANELS AND BOTTOM CHORD SHALL HAVE A PROPERLY ATTACHED RIGID CEILING.

IMPORTANT FURNISH COPY OF THIS DESIGN TO INSTALLATION CONTRACTOR. ALPINE ENGINEERED PRODUCTS, INC., SHALL NOT BE RESPONSIBLE FOR ANY DEVIATION FROM THIS DESIGN; ANY FAILURE TO BUILD THE TRUSS IN CONFORMANCE WITH TPI; OR FABRICATING, HANDLING, SHIPPING, INSTALLING & BRACING OF TRUSSES. DESIGN CONFORMS WITH APPLICABLE PROVISIONS OF NDS (NATIONAL DESIGN SPEC, BY AF&PA) AND TPI. ALPINE CONNECTOR PLATES ARE MADE OF 20/18/16GA (W,H/S/K) ASTM A653 GRADE 40/60 (W,K/H,S) GALV. STEEL. APPLY PLATES TO EACH FACE OF TRUSS AND, UNLESS OTHERWISE LOCATED ON THIS DESIGN, POSITION PER DRAWINGS 160A-Z. ANY INSPECTION OF PLATES FOLLOWED BY (1) SHALL BE PER ANNEX A3 OF TPI 1-2002 SEC. 3. A SEAL ON THIS DRAWING INDICATES ACCEPTANCE OF PROFESSIONAL ENGINEERING RESPONSIBILITY SOLELY FOR THE TRUSS COMPONENT DESIGN SHOWN. THE SUITABILITY AND USE OF THIS COMPONENT FOR ANY BUILDING IS THE RESPONSIBILITY OF THE BUILDING DESIGNER, PER ANSI/TPI 1 SEC. 2.

ARTHUR R. FISHER
LICENSE
No. 59687
STATE OF FLORIDA
PROFESSIONAL ENGINEER
Sep '03

MAX. TOT. LD. 60 PSF

MAX. SPACING 24.0"

REF	ASCE7-98-GAB11015
DATE	11/26/03
DRWG	A11015EC1103
-ENG	

GABLE DETAIL
FOR LET-IN VERTICALS

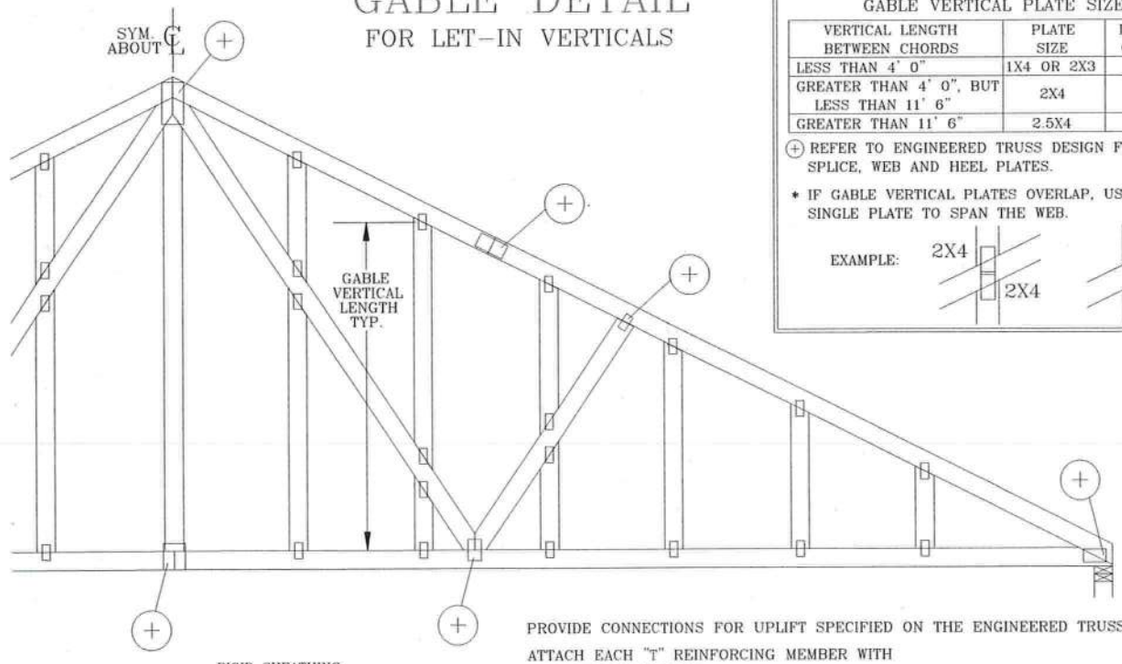

GABLE VERTICAL PLATE SIZES		
VERTICAL LENGTH BETWEEN CHORDS	PLATE SIZE	IF PLATES OVERLAP*
LESS THAN 4' 0"	1X4 OR 2X3	2X8
GREATER THAN 4' 0", BUT LESS THAN 11' 6"	2X4	2X8
GREATER THAN 11' 6"	2.5X4	2.5X8

(+) REFER TO ENGINEERED TRUSS DESIGN FOR PEAK, SPLICE, WEB AND HEEL PLATES.

* IF GABLE VERTICAL PLATES OVERLAP, USE A SINGLE PLATE TO SPAN THE WEB.

EXAMPLE:

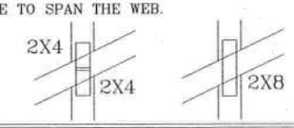

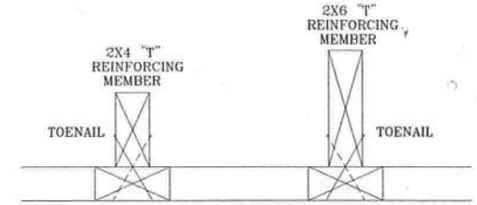

TO CONVERT FROM "L" TO "T" REINFORCING MEMBERS, MULTIPLY "T" FACTOR BY LENGTH (BASED ON GABLE VERTICAL SPECIES, GRADE AND SPACING) FOR (1) 2X4 "L" BRACE, GROUP A, OBTAINED FROM THE APPROPRIATE ALPINE GABLE DETAIL FOR ASCE OR SBCCI WIND LOAD.

MAXIMUM ALLOWABLE "T" REINFORCED GABLE VERTICAL LENGTH IS 14' FROM TOP TO BOTTOM CHORD.

WEB LENGTH INCREASE W/ "T" BRACE

WIND SPEED AND MRH	"T" REINF. MBR. SIZE	SBCCI	ASCE
110 MPH	2x4	10 %	10 %
15 FT	2x6	40 %	50 %
110 MPH	2x4	10 %	10 %
30 FT	2x6	50 %	50 %
100 MPH	2x4	10 %	10 %
15 FT	2x6	30 %	50 %
100 MPH	2x4	10 %	10 %
30 FT	2x6	40 %	40 %
90 MPH	2x4	20 %	10 %
15 FT	2x6	20 %	40 %
90 MPH	2x4	10 %	10 %
30 FT	2x6	30 %	50 %
80 MPH	2x4	10 %	20 %
15 FT	2x6	10 %	30 %
80 MPH	2x4	20 %	10 %
30 FT	2x6	20 %	40 %
70 MPH	2x4	0 %	20 %
15 FT	2x6	0 %	20 %
70 MPH	2x4	10 %	20 %
30 FT	2x6	10 %	30 %

EXAMPLE:
ASCE WIND SPEED = 100 MPH
MEAN ROOF HEIGHT = 30 FT
GABLE VERTICAL = 24" O.C. SP #3
"T" REINFORCING MEMBER SIZE = 2X4
"T" BRACE INCREASE (FROM ABOVE) = 10% = 1.10
(1) 2X4 "L" BRACE LENGTH = 6' 7"
MAXIMUM "T" REINFORCED GABLE VERTICAL LENGTH
1.10 x 6' 7" = 7' 3"

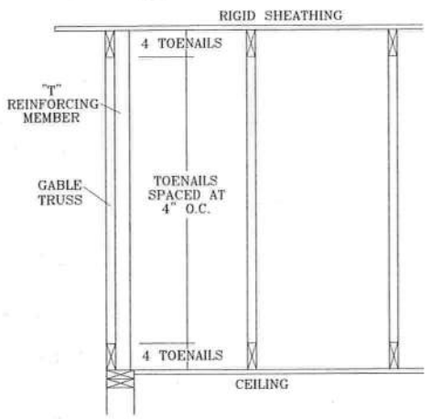

PROVIDE CONNECTIONS FOR UPLIFT SPECIFIED ON THE ENGINEERED TRUSS DESIGN.

ATTACH EACH "T" REINFORCING MEMBER WITH
HAND DRIVEN NAILS:
10d COMMON TOENAILS AT 4" O.C. PLUS (4) 16d COMMON TOENAILS IN TOP AND BOTTOM CHORD.
GUN DRIVEN NAILS - 0.131" X 3":
TOENAILS AT 4" O.C. PLUS (4) TOENAILS IN TOP AND BOTTOM CHORD.

THIS DETAIL TO BE USED WITH THE APPROPRIATE ALPINE GABLE DETAIL FOR ASCE OR SBCCI WIND LOAD.
ASCE 7-93 GABLE DETAIL DRAWINGS
A11015EN1103, A10015EN1103, A09015EN1103, A08015EN1103, A07015EN1103
A11030EN1103, A10030EN1103, A09030EN1103, A08030EN1103, A07030EN1103
ASCE 7-98 GABLE DETAIL DRAWINGS
A13015EC1103, A12015EC1103, A11015EC1103, A10015EC1103, A08515EC1103
A13030EC1103, A12030EC1103, A11030EC1103, A10030EC1103, A08530EC1103
SBCCI GABLE DETAIL DRAWINGS
S11015EN1103, S10015EN1103, S09015EN1103, S08015EN1103, S07015EN1103
S11030EN1103, S10030EN1103, S09030EN1103, S08030EN1103, S07030EN1103

SEE APPROPRIATE ALPINE GABLE DETAIL (ASCE OR SBCCI WIND LOAD) FOR MAXIMUM UNREINFORCED GABLE VERTICAL LENGTH.

THIS DRAWING REPLACES DRAWINGS GAB98117 876,719 & HC26294035

ALPINE
ALPINE ENGINEERED PRODUCTS, INC.
POMPANO BEACH, FLORIDA

WARNING TRUSSES REQUIRE EXTREME CARE IN FABRICATING, HANDLING, SHIPPING, INSTALLING AND BRACING. REFER TO BCSI 1-03 (BUILDING COMPONENT SAFETY INFORMATION), PUBLISHED BY TPI (TRUSS PLATE INSTITUTE, 583 D'ONOFRIO DR., SUITE 200, MADISON, WI. 53719) AND WTCA (WOOD TRUSS COUNCIL OF AMERICA, 6300 ENTERPRISE LN, MADISON, WI 53719) FOR SAFETY PRACTICES PRIOR TO PERFORMING THESE FUNCTIONS. UNLESS OTHERWISE INDICATED, TOP CHORD SHALL HAVE PROPERLY ATTACHED STRUCTURAL PANELS AND BOTTOM CHORD SHALL HAVE A PROPERLY ATTACHED RIGID CEILING.

IMPORTANT FURNISH COPY OF THIS DESIGN TO INSTALLATION CONTRACTOR. ALPINE ENGINEERED PRODUCTS, INC., SHALL NOT BE RESPONSIBLE FOR ANY DEVIATION FROM THIS DESIGN; ANY FAILURE TO BUILD THE TRUSS IN CONFORMANCE WITH TPI; OR FABRICATING, HANDLING, SHIPPING, INSTALLING & BRACING OF TRUSSES. DESIGN CONFORMS WITH APPLICABLE PROVISIONS OF NDS (NATIONAL DESIGN SPEC, BY AF&PA) AND TPI. ALPINE CONNECTOR PLATES ARE MADE OF 20/18/16GA (W,H/S/K) ASTM A653 GRADE 40/60 (W,K/H,S) GALV. STEEL. APPLY PLATES TO EACH FACE OF TRUSS AND, UNLESS OTHERWISE LOCATED ON THIS DESIGN, POSITION PER DRAWINGS 160A-Z. ANY INSPECTION OF PLATES FOLLOWED BY (I) SHALL BE PER ANNEX A3 OF TPI 1-2002 SEC. 3. A SEAL ON THIS DRAWING INDICATES ACCEPTANCE OF PROFESSIONAL ENGINEERING RESPONSIBILITY SOLELY FOR THE TRUSS COMPONENT DESIGN SHOWN. THE SUITABILITY AND USE OF THIS COMPONENT FOR ANY BUILDING IS THE RESPONSIBILITY OF THE BUILDING DESIGNER, PER ANSI/TPI 1 SEC. 2.

ARTHUR R. FISHER
LICENSE
No. 59687
STATE OF FLORIDA
PROFESSIONAL ENGINEER

MAX TOT. LD. 60 PSF
DUR. FAC. ANY
MAX SPACING 24.0"

REF	LET-IN VERT
DATE	01/16/04
DRWG	GBLLETIN1103
-ENG	DLJ/KAR

Mark Disosway, P.E.
POB 868, Lake City, FL 32056, Ph (386) 754-5419, Fax (386) 269-4871

Nov 2, 2005

Columbia County, Florida Building Department

Re: Mack Robinson, Roger Little Residence, NW 1/4 of NW 1/5 - Section 7 TWP-5-South, Range-17-East Columbia County, Florida

Dear Building Official:

Please accept this letter as addendum to the plans for the above referenced house to change all references to FBC 2001 to FBC 2004.

- The plan was drawn prior to the effective date for FBC 2004, 01 October 2005.
- Since the wind load requirements of FBC 2004 remain basically unchanged from FBC 2001 there are no structural changes required to this plan.

02NOV05

Mark Disosway, PE
Florida Registered Professional Engineer

Cc Mack Robinson

16x7

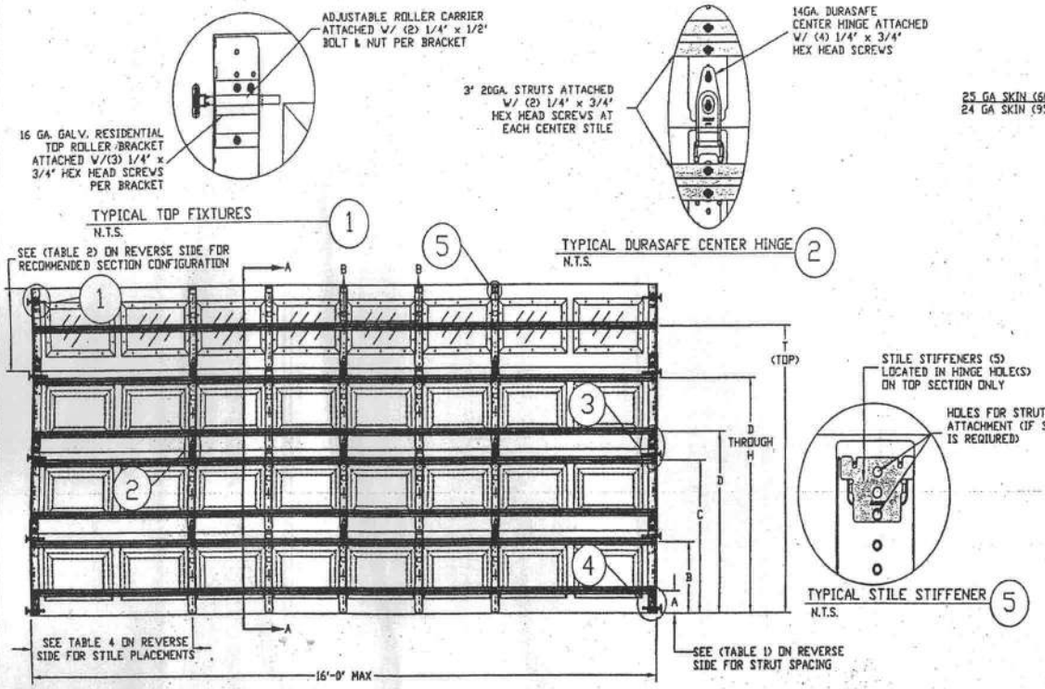

INSIDE ELEVATION
N.T.S.

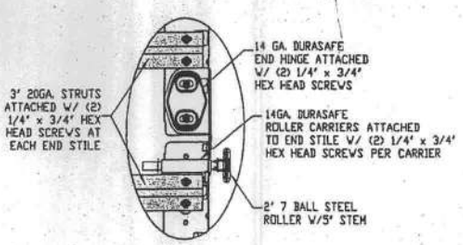

TYPICAL DURASAFE END HINGE
N.T.S.
3

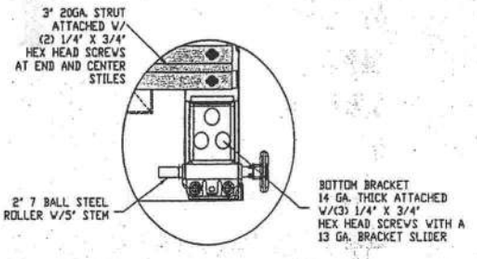

TYPICAL BOTTOM BRACKET
N.T.S.
4

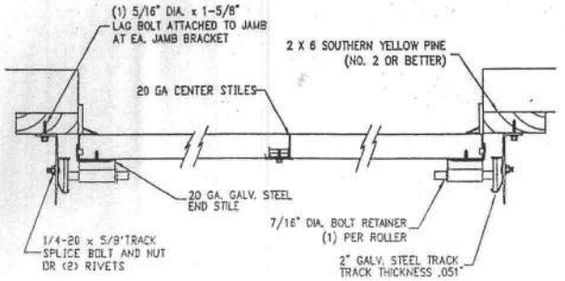

TRACK MOUNTING DETAIL
N.T.S.

WOOD JAMB ATTACHMENT TO STRUCTURE

RATED FOR 120 MPH PEAK GUST; EXPOSURE B; 30' OR LESS MEAN ROOF HEIGHT

2 X 6 VERTICAL JAMB ATTACHMENT TO WOOD FRAME STRUCTURE
5/16" X 3" LAG SCREWS STARTING 6" FROM ENDS THEN 24" O.C. (1 1/2" EMBEDMENT)

2 X 6 VERTICAL JAMB ATTACHMENT TO 2,000 PSI CONCRETE
HILTI KWIK BOLT 3/8" X 4" STARTING 6" FROM ENDS THEN 24" O.C. (2 1/2" EMBEDMENT)
HILTI SLEEVE ANCHOR 3/8" X 2-3/4" STARTING 6" FROM ENDS THEN 24" O.C. (1 1/4" EMBEDMENT)
ITW/RAMSET REDHEAD (TRU-BOLT) 3/8" X 4" STARTING 6" FROM ENDS THEN 24" O.C. (2 1/2" EMBEDMENT)

2 X 6 VERTICAL JAMB ATTACHMENT TO C-90 BLOCK
HILTI SLEEVE ANCHOR 3/8" X 2-3/4" STARTING 6" FROM ENDS THEN 24" O.C. (1 1/4" EMBEDMENT)
ITW/RAMSET TAPCON 1/4" X 2-3/4" STARTING 6" FROM ENDS, USE PAIRS OF FASTENERS (3" APART) AT 16" O.C.(1 1/4" EMBEDMENT)

*LAGS AND BOLTS CAN BE COUNTERSUNK TO PROVIDE A FLUSH MOUNTING SURFACE.
*PREPARATION OF WOOD JAMBS BY OTHERS

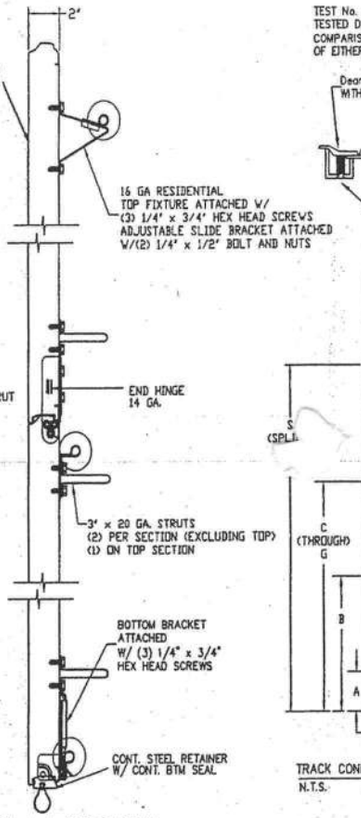

SECTION A-A (SIDE VIEW)
N.T.S.

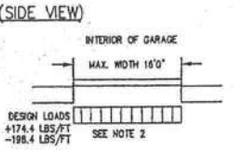

SPECIFICATIONS AND NOTES

1. ALL THE LOAD FROM THE DOOR IS TRANSFERRED TO THE VERTICAL TRACK, FROM THE TRACK THE LOAD IS TRANSFERRED TO THE VERTICAL JAMBS. THE HORIZONTAL JAMB OR HEADER RECEIVES NO PORTION OF THE LOAD TRANSFERRED FROM THE DOOR.
2. EACH VERTICAL JAMBS RECEIVES MAXIMUM DESIGN LOADS OF: +174.4 LBS/FT & -198.4 LBS/FT
3. DOORS AND HARDWARE WILL BE DESIGNED, MANUFACTURED AND INSTALLED WITH STANDARDS AS SET FORTH BY DASMA.
4. DOOR SECTIONS SHALL BE 25 GA. MIN. (.019") ROLLED FORMED LIGHT COMMERCIAL QUALITY, G-40 GALVANIZATION
5. SUPPORTING STRUCTURAL ELEMENTS SHALL BE DESIGNED BY A REGISTRED PROFESSIONAL ENGINEER FOR WIND LOADS INDICATED ON THIS DRAWING IN ADDITION TO OTHER LOADINGS.
6. THE METHOD OF TESTING WAS IN SUBSTANTIAL CONFORMANCE WITH THE PROCEDURE DESCRIBED IN DASMA 108, ASTM E330, AND THE SOUTHERN BUILDING CODE SECTION 1606 WIND LOAD DESIGN CRITERIA THE PRESSURES SHOWN ON THE DRAWINGS WERE CALCULATED USING ASCE 7-98 WITH THE FOLLOWING PARAMETERS:
   A. BASIC WIND SPEED OF 120 MPH (PEAK GUST)
   B. DOOR CAN BE INSTALLED WITH 5 FEET OF DOORS WIDTH INSIDE THE EDGE STRIP.
   C. 30' OR LESS MEAN ROOF HEIGHT AT ANY SLOPE
   D. USE FACTOR OF 1.0
   E. EXPOSURE RATING OF B
7. REFER TO TABLES ON THE REVERSE SIDE FOR ADDITIONAL DOOR WIDTHS AND THEIR DESIGN PRESSURES

GLAZING OPTION CROSS SECTION

GLAZING NOT AVAILABLE IN WIND-BORNE DEBRIS REGION

TEST No. IRC-6009-169-15 ON OCTOBER 10, 2002 INCLUDED GLAZING IN THE TESTED DOOR. THE TEST PRESSURES WERE +67.9 PSF AND -80.3 PSF. BY COMPARISION, UP TO EIGHT (8) WINDOWS MAY BE INSTALLED IN (1) ONE SECTION OF EITHER THE MODEL 600 OR 950 DOORS CONSTRUCTED PER THIS DRAWING.

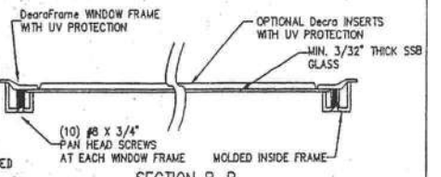

SECTION B-B

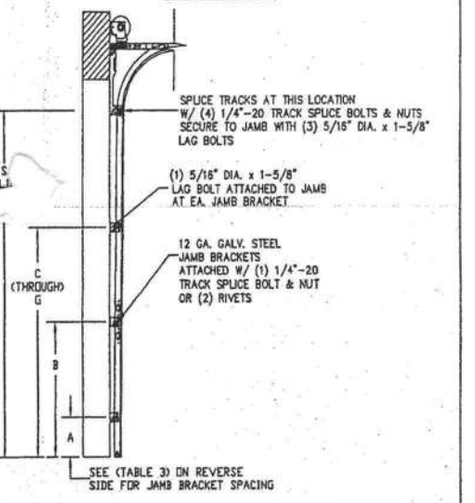

TRACK CONFIGURATION FOR 6'6" UP TO 14' TALL DOORS
N.T.S.

REV	DESCRIPTION OF REVISIONS	DATE	BY

MAX SIZE
16' x 14'

DESIGN LOADS
+21.8 PSF
-24.8 PSF

TEST LOADS
+32.7 PSF
-37.2 PSF

JUN 03 2003

Amarr GARAGE DOORS
165 CARRIAGE COURT WINSTON-SALEM, N.C. 27103

MODEL #600 STRATFORD w/DuraSafe
MODEL 950 HERITAGE w/DuraSafe
Short Panel, Long Panel, and Flush Panel

SIZE	DRAWN BY	DLJ	DATE	04/15/03	DRAWING NUMBER
B	CHECKED BY	AAE	DATE	04/15/03	IRC-6016-120-15

ENGINEER: THOMAS L. SHUMBERNE P.E. LIC. No. 0040579 | SHEET 1 OF 1

TABLE 1

DOOR	STRUT SPACING (BASED ON RECOMMENDED SECTION CONFIGURATION)														TOP
HEIGHT	A	B	C	D	E	F	G	H	I	J	K	L	M	N	T
6' 6"	5 1/2"	18 1/4"	25 1/2"	36 1/4"	43 1/2"	54 1/4"									67 1/2"
7' 0"	5 1/2"	18 1/4"	25 1/2"	33 1/4"	46 1/2"	60 1/4"									73 1/2"
7' 6"	5 1/2"	15 1/4"	22 1/2"	33 1/4"	40 1/2"	51 1/4"	58 1/2"	69 1/4"							81"
8' 0"	5 1/2"	18 1/4"	25 1/2"	36 1/4"	43 1/2"	54 1/4"	61 1/2"	72 1/4"							85 1/2"
8' 6"	5 1/2"	18 1/4"	25 1/2"	39 1/4"	46 1/2"	60 1/4"	67 1/2"	78 1/4"							91 1/2"
9' 0"	5 1/2"	15 1/4"	22 1/2"	33 1/4"	40 1/2"	51 1/4"	58 1/2"	69 1/4"	76 1/2"	87 1/4"					99"
9' 6"	5 1/2"	18 1/4"	25 1/2"	36 1/4"	43 1/2"	54 1/4"	61 1/2"	72 1/4"	79 1/2"	90 1/4"					103 1/2"
10' 0"	5 1/2"	18 1/4"	25 1/2"	39 1/4"	46 1/2"	60 1/4"	67 1/2"	78 1/4"	85 1/2"	96 1/4"					109 1/2"
10' 6"	5 1/2"	18 1/4"	25 1/2"	39 1/4"	46 1/2"	60 1/4"	67 1/2"	81 1/4"	88 1/2"	102 1/4"					115 1/2"
11' 0"	5 1/2"	18 1/4"	25 1/2"	36 1/4"	43 1/2"	54 1/4"	61 1/2"	72 1/4"	79 1/2"	90 1/4"	97 1/2"	108 1/4"			121 1/2"
11' 6"	5 1/2"	18 1/4"	25 1/2"	39 1/4"	46 1/2"	60 1/4"	67 1/2"	78 1/4"	85 1/2"	96 1/4"	103 1/2"	114 1/4"			127 1/2"
12' 0"	5 1/2"	18 1/4"	25 1/2"	39 1/4"	46 1/2"	60 1/4"	67 1/2"	81 1/4"	88 1/2"	102 1/4"	109 1/2"	120 1/4"			133 1/2"
12' 6"	5 1/2"	18 1/4"	25 1/2"	36 1/4"	43 1/2"	54 1/4"	61 1/2"	72 1/4"	79 1/2"	90 1/4"	97 1/2"	108 1/4"	115 1/2"	126 1/4"	139 1/2"
13' 0"	5 1/2"	18 1/4"	25 1/2"	39 1/4"	46 1/2"	60 1/4"	67 1/2"	78 1/4"	85 1/2"	96 1/4"	103 1/2"	114 1/4"	121 1/2"	132 1/4"	145 1/2"
13' 6"	5 1/2"	18 1/4"	25 1/2"	39 1/4"	46 1/2"	60 1/4"	67 1/2"	81 1/4"	88 1/2"	102 1/4"	109 1/2"	120 1/4"	127 1/2"	138 1/4"	151 1/2"
14' 0"	5 1/2"	18 1/4"	25 1/2"	39 1/4"	46 1/2"	60 1/4"	67 1/2"	81 1/4"	88 1/2"	102 1/4"	109 1/2"	123 1/4"	130 1/2"	144 1/4"	157 1/2"

TABLE 2

DOOR	SECTION HEIGHTS							
HEIGHT	Btm	#2	#3	#4	#5	#6	#7	#8
14' 0"	21"	21"	21"	21"	21"	21"	21"	21"
13' 6"	21"	21"	21"	21"	21"	18"	18"	21"
13' 0"	21"	21"	21"	18"	18"	18"	18"	21"
12' 6"	21"	18"	18"	18"	18"	18"	18"	21"
12' 0"	21"	21"	21"	21"	21"	18"	21"	
11' 6"	21"	21"	21"	18"	18"	18"	21"	
11' 0"	21"	18"	18"	18"	18"	18"	21"	
10' 6"	21"	21"	21"	21"	21"	21"		
10' 0"	21"	21"	21"	18"	18"	21"		
9' 6"	21"	18"	18"	18"	18"	21"		
9' 0"	18"	18"	18"	18"	18"	18"		
8' 6"	21"	21"	21"	18"	21"			
8' 0"	21"	18"	18"	18"	21"			
7' 6"	18"	18"	18"	18"	18"			
7' 0"	21"	21"	21"	21"				
6' 6"	21"	18"	18"	21"				

TABLE 3

DOOR	TRACK ATTACHMENT							SPLICE
HEIGHT	A	B	C	D	E	F	G	S
6' 6"	10"	38"	58"					70"
7'	10"	38"	58"					76"
7' 6"	4"	28"	52"	76"				82"
8'	10"	34"	58"	82"				88"
8' 6"	4"	28"	52"	76"				94"
9'	10"	34"	58"	82"				100"
9' 6"	4"	28"	52"	76"	100"			106"
10'	10"	34"	58"	82"	106"			112"
10' 6"	4"	28"	52"	76"	100"			118"
11'	10"	34"	58"	82"	106"			124"
11' 6"	4"	28"	52"	76"	100"	124"		130"
12'	10"	34"	58"	82"	106"	130"		136"
12' 6"	4"	28"	52"	76"	100"	124"		142"
13'	10"	34"	58"	82"	106"	130"		148"
13' 6"	4"	28"	52"	76"	100"	124"	148"	154"
14'	10"	34"	58"	82"	106"	130"	154"	160"

TABLE 4

Section Width (ft)	Panel Type	Center Stile Locations (Measured from Left Edge)				
		1st (in)	2nd (in)	3rd (in)	4th (in)	5th (in)
10' 0	Short	48.406	71.594			
10' 0	Long	30.000	60.000	90.000		
12' 0	Short	48.812	72.000	96.364		
12' 0	Long	49.625	72.000	94.375		
12' 2	Short	49.636	73.000	96.364		
12' 2	Long	50.084	73.000	95.916		
12' 4	Short	50.636	74.000	97.364		
12' 4	Long	51.084	74.000	96.916		
12' 6	Short	50.670	75.000	99.330		
12' 6	Long	51.170	75.000	98.830		
12' 8	Short	51.670	76.000	100.330		
12' 8	Long	52.100	76.000	99.900		
12' 10	Short	52.250	77.000	101.750		
12' 10	Long	53.100	77.000	100.900		
13' 0	Short	53.000	78.000	103.000		
13' 0	Long	54.100	78.000	101.900		
13' 2	Short	54.000	79.000	104.000		
13' 2	Long	55.100	79.000	102.900		
13' 4	Short	54.400	80.000	105.600		
13' 4	Long	54.900	80.000	105.100		
13' 6	Short	55.400	81.000	106.600		
13' 6	Long	55.900	81.000	106.100		
13' 8	Short	56.400	82.000	107.600		
13' 8	Long	56.625	82.000	107.375		
13' 10	Short	57.163	82.938	108.713		
13' 10	Long	57.170	83.000	108.830		
14' 0	Short	57.763	83.938	110.113		
14' 0	Long	58.625	84.000	109.375		
14' 2	Short	58.846	84.938	111.413		
14' 2	Long	59.170	85.000	110.830		
14' 4	Short	59.163	85.938	112.713		
14' 4	Long	60.170	86.000	111.830		
14' 6	Short	59.863	86.938	114.013		
14' 6	Long	61.170	87.000	112.8300		
14' 8	Short	60.563	87.938	115.313		
14' 8	Long	44.812	^66.406	88.000	^109.594	131.188
14' 10	Short	61.263	88.938	116.613		
14' 10	Long	45.600	^67.300	89.000	^110.700	132.400
15' 0	Short	61.938	^75.938	89.938	^103.938	117.938
15' 0	Long	46.600	^68.300	90.000	^111.700	133.400
15' 2	Short	62.663	^76.801	90.938	^105.076	119.213
15' 2	Long	47.600	^69.300	91.000	^112.700	134.400
15' 4	Short	53.600	79.200	104.800	130.400	
15' 4	Long	47.250	^69.625	92.000	^114.375	136.750
15' 6	Short	46.624	^69.812	93.000	^116.188	139.376
15' 6	Long	47.600	^70.300	93.000	^115.700	138.400
15' 8	Short	47.624	^70.812	94.000	^117.188	140.376
15' 8	Long	48.600	^71.300	94.000	^116.700	139.400
15' 10	Short	48.624	^71.812	95.000	^118.188	141.376
15' 10	Long	49.167	^72.084	95.000	^117.917	140.833
16' 0	Short	49.624	^72.812	96.000	^119.188	142.376
16' 0	Long	50.600	^73.300	96.000	^118.700	141.400

^ Stiles do not need to be hinged

TABLE 5

Section Width (ft)	Panel Type	Max Design Loads Allowed	
		Positive (PSF)	Negitive (PSF)
10' 0	Short	29.1	33.1
10' 0	Long	34.7	39.5
12' 0	Short	28.9	32.9
12' 0	Long	28.9	32.9
12' 2	Short	28.5	32.5
12' 2	Long	28.5	32.5
12' 4	Short	28.1	32.0
12' 4	Long	28.1	32.0
12' 6	Short	27.8	31.6
12' 6	Long	27.8	31.6
12' 8	Short	27.4	31.2
12' 8	Long	27.4	31.2
12' 10	Short	27.0	30.8
12' 10	Long	27.0	30.8
13' 0	Short	26.7	30.4
13' 0	Long	26.7	30.4
13' 2	Short	26.4	30.0
13' 2	Long	26.4	30.0
13' 4	Short	26.0	29.6
13' 4	Long	26.0	29.6
13' 6	Short	25.7	29.2
13' 6	Long	25.7	29.2
13' 8	Short	25.4	28.9
13' 8	Long	25.4	28.9
13' 10	Short	25.1	28.5
13' 10	Long	25.1	28.5
14' 0	Short	24.8	28.2
14' 0	Long	24.8	28.2
14' 2	Short	24.5	27.9
14' 2	Long	24.5	27.9
14' 4	Short	24.2	27.5
14' 4	Long	24.2	27.5
14' 6	Short	23.9	27.2
14' 6	Long	23.9	27.2
14' 8	Short	23.7	26.9
14' 8	Long	23.7	26.9
14' 10	Short	23.4	26.6
14' 10	Long	23.4	26.6
15' 0	Short	23.1	26.3
15' 0	Long	23.1	26.3
15' 2	Short	22.9	26.0
15' 2	Long	22.9	26.0
15' 4	Short	22.6	25.7
15' 4	Long	22.6	25.7
15' 6	Short	22.4	25.5
15' 6	Long	22.4	25.5
15' 8	Short	22.2	25.2
15' 8	Long	22.2	25.2
15' 10	Short	21.9	24.9
15' 10	Long	21.9	24.9
16' 0	Short	21.8	24.8
16' 0	Long	21.8	24.8

LX01

Notice of Treatment 11755

Applicator: Florida Pest Control & Chemical Co. (www.flapest .com)
Address: BAYA AVE
City L.C. Phone 752 1703

Site Location: Subdivision
Lot # Block# Permit # 23811
Address 401 SW LITTLE RD

Product used	Active Ingredient	% Concentration
☐ Premise	Imidacloprid	0.1%
☐ Termidor	Fipronil	0.12%
☑ Bora-Care	Disodium Octaborate Tetrahydrate	23.0%

Type treatment: ☐ Soil ☑ Wood

Area Treated	Square feet	Linear feet	Gallons Applied
Dwelling	2596	661	4

As per Florida Building Code 104.2.6 – If soil chemical barrier method for termite prevention is used, final exterior treatment shall be completed prior to final building approval.

If this notice is for the final exterior treatment, initial this line _____.

12/29/05 — Date
1100 — Time
GUNNY F254 — Print Technician's Name

Remarks:

Applicator - White Permit File - Canary Permit Holder - Pink

10/05 ©

4

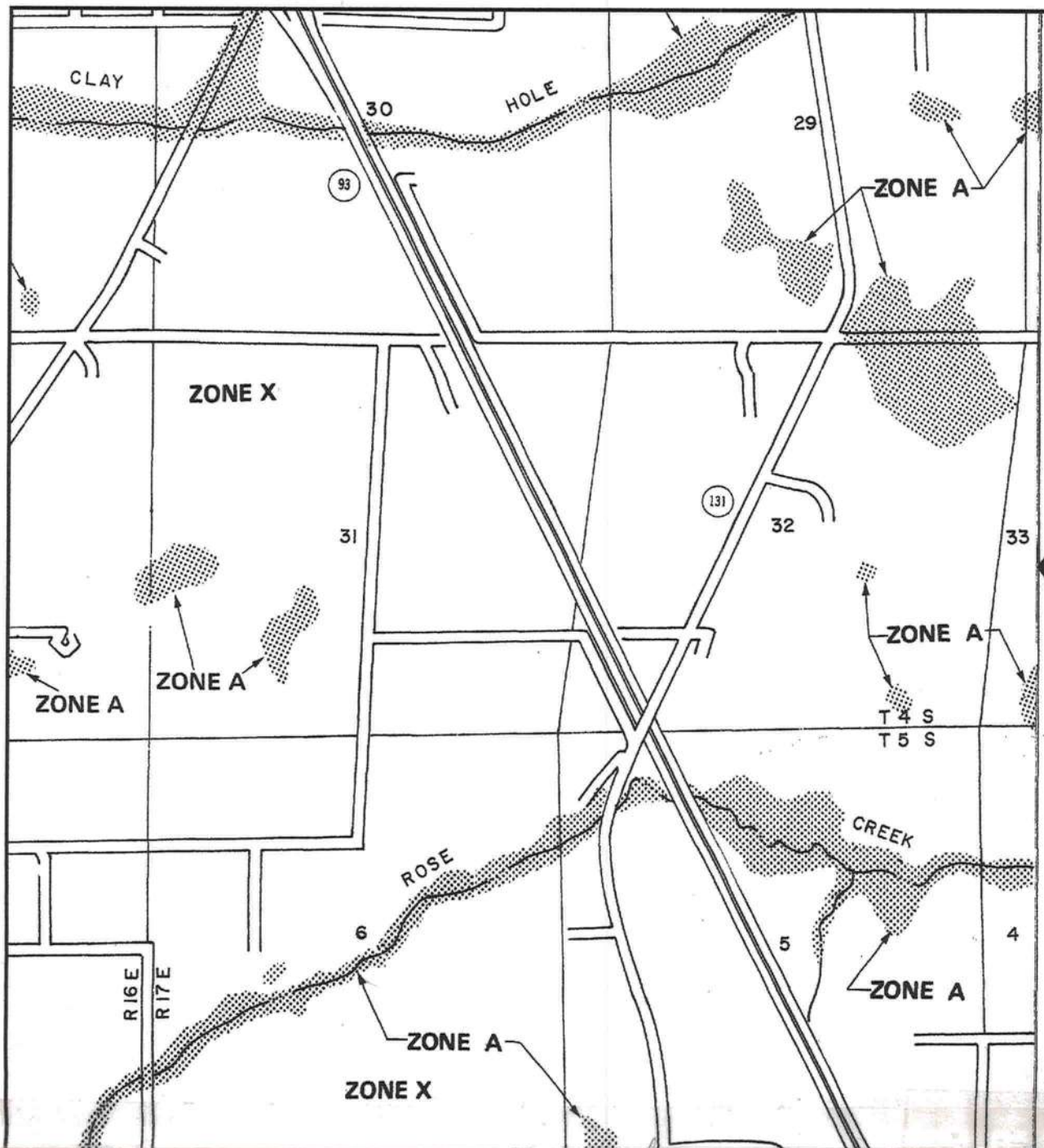

APPROXIMATE SCALE IN FEET
2000 0 2000

NATIONAL FLOOD INSURANCE PROGRAM

FIRM
FLOOD INSURANCE RATE MAP

COLUMBIA COUNTY, FLORIDA
(UNINCORPORATED AREAS)

PANEL 175 OF 290

PANEL LOCATION

COMMUNITY-PANEL NUMBER
120070 0175 B
EFFECTIVE DATE:
JANUARY 6, 1988

Federal Emergency Management Agency

This is an official copy of a portion of the above referenced flood map. It was extracted using F-MIT Version 1.0. This map does not reflect changes or amendments which may have been made subsequent to the date on the title block. Futher information

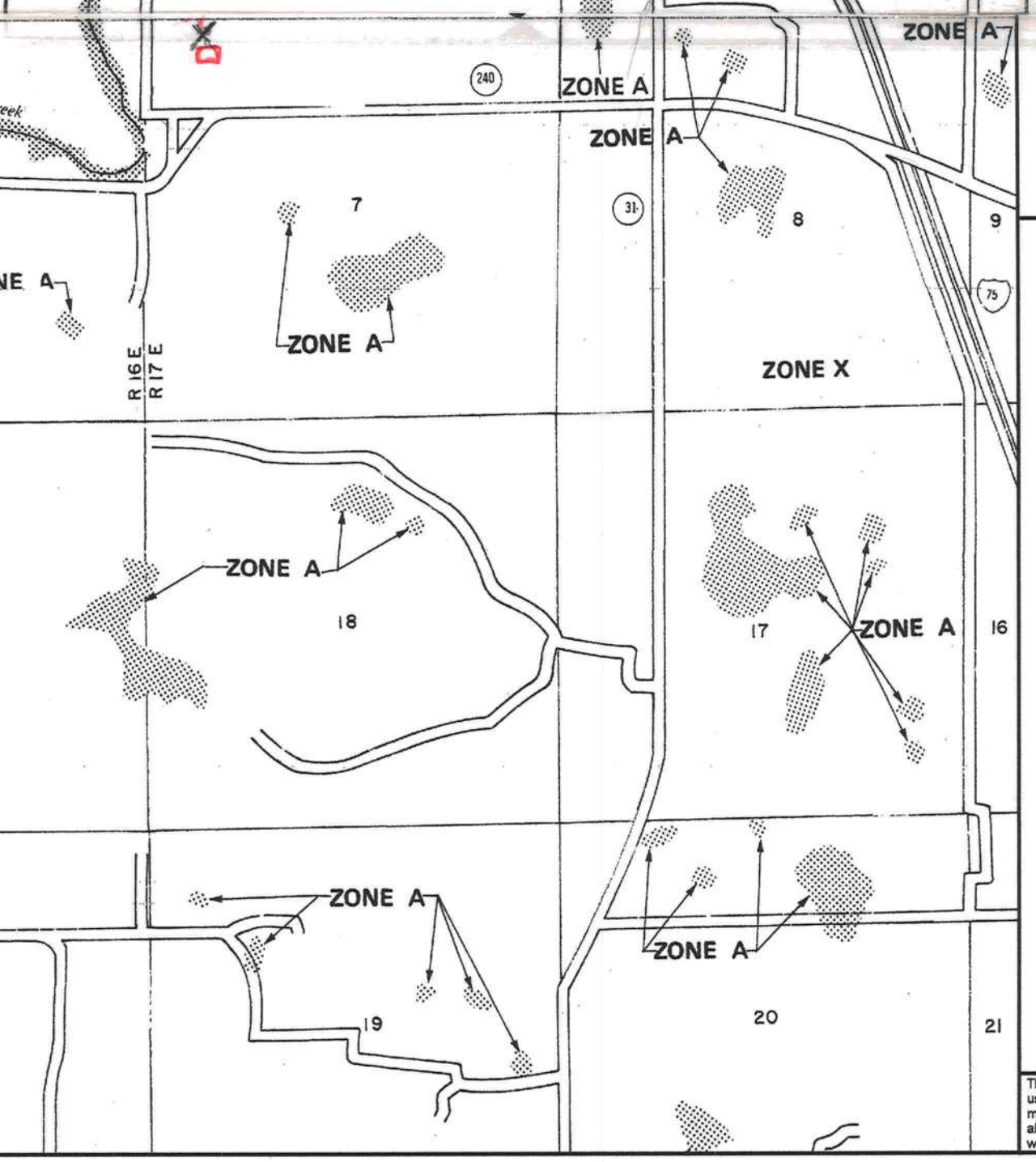

APPROXIMATE SCALE IN FEET
2000 0 2000

NATIONAL FLOOD INSURANCE PROGRAM

FIRM
FLOOD INSURANCE RATE MAP

COLUMBIA COUNTY, FLORIDA
(UNINCORPORATED AREAS)

PANEL 225 OF 290

PANEL LOCATION

COMMUNITY-PANEL NUMBER
120070 0225 B
EFFECTIVE DATE:
JANUARY 6, 1988

Federal Emergency Management Agency

This is an official copy of a portion of the above referenced flood map. It was extracted using F-MIT Version 1.0. This map does not reflect changes or amendments which may have been made subsequent to the date on the title block. Futher information about National Flood Insurance Program flood hazard maps is available at www.fema.gov/mit/tsd.

Print Date: 10/31/2005 (printed at scale and type A)