THIS DWG PREPARED FROM COMPUTER INPUT (LOADS & DIMENSIONS) SUBMITTED BY TRUSS MFR.

Top chord 2x6 SP #2 N :T1 2x4 SP #2 N:
Bot chord 2x6 SP #2 N
Webs 2x4 SP #2 N

110 mph wind, 15.00 ft mean hgt, ASCE 7-02, CLOSED bldg, Located anywhere in roof, CAT II, EXP B, wind TC DL=5.0 psf, wind BC DL=5.0 psf.

Wind reactions based on MWFRS pressures.

In lieu of structural panels use purlins to brace all flat TC @ 24" OC.

Deflection meets L/240 live and L/180 total load.

2 COMPLETE TRUSSES REQUIRED

Nailing Schedule: (0.131"x3"_Gun_nails)
Top Chord: 1 Row @12.00" o.c.
Bot Chord: 1 Row @12.00" o.c.
Webs : 1 Row @ 4" o.c.
Use equal spacing between rows and stagger nails in each row to avoid splitting.

Right end vertical not exposed to wind pressure.

#1 hip supports 7-0-0 jacks with no webs.

The overall height of this truss excluding overhang is 5-0-7.

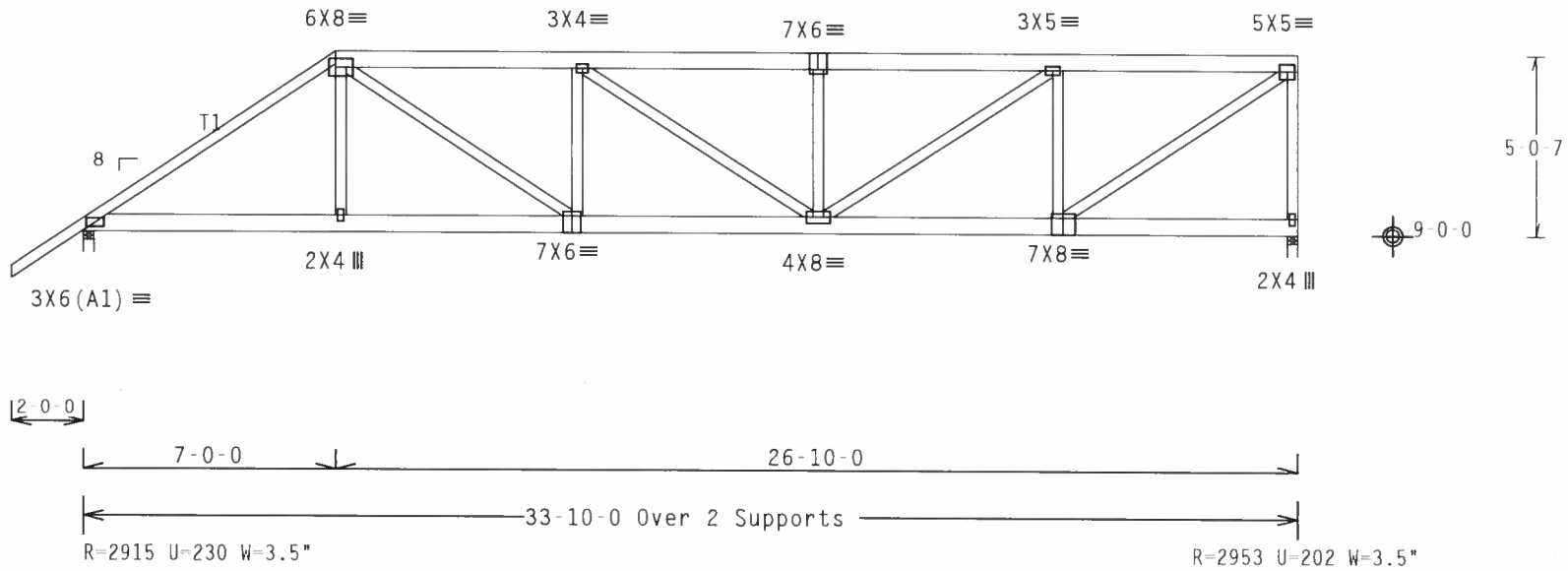

Design Crit: TPI-2002(STD)/FBC

PLT TYP. Wave

Cq/RT=1.00(1.25)/10(0) 7.25.0502.30 QTY:1 FL/-/5/-/-/R/- Scale =.1875"/Ft.

ALPINE
Alpine Engineered Products, Inc.
1950 Marley Drive
Haines City, FL 33844
FL Certificate of Authorization # 567

WARNING TRUSSES REQUIRE EXTREME CARE IN FABRICATION, HANDLING, SHIPPING, INSTALLING AND BRACING. REFER TO BCSI (BUILDING COMPONENT SAFETY INFORMATION), PUBLISHED BY TPI (TRUSS PLATE INSTITUTE, 218 NORTH LEE STREET, SUITE 312, ALEXANDRIA, VA, 22314) AND WTCA (WOOD TRUSS COUNCIL OF AMERICA, 6300 ENTERPRISE LANE, MADISON, WI 53719) FOR SAFETY PRACTICES PRIOR TO PERFORMING THESE FUNCTIONS. UNLESS OTHERWISE INDICATED TOP CHORD SHALL HAVE PROPERLY ATTACHED STRUCTURAL PANELS AND BOTTOM CHORD SHALL HAVE A PROPERLY ATTACHED RIGID CEILING.

IMPORTANT FURNISH A COPY OF THIS DESIGN TO THE INSTALLATION CONTRACTOR. ALPINE ENGINEERED PRODUCTS, INC. SHALL NOT BE RESPONSIBLE FOR ANY DEVIATION FROM THIS DESIGN; ANY FAILURE TO BUILD THE TRUSS IN CONFORMANCE WITH TPI; OR FABRICATING, HANDLING, SHIPPING, INSTALLING & BRACING OF TRUSSES DESIGN CONFORMS WITH APPLICABLE PROVISIONS OF NDS (NATIONAL DESIGN SPEC. BY AF&PA) AND TPI. ALPINE CONNECTOR PLATES ARE MADE OF 20/18/16GA (W,H/SS/K) ASTM A653 GRADE 40/60 (W, K/H,SS) GALV. STEEL. APPLY PLATES TO EACH FACE OF TRUSS AND, UNLESS OTHERWISE LOCATED ON THIS DESIGN, POSITION PER DRAWINGS 160A Z. ANY INSPECTION OF PLATES FOLLOWED BY (1) SHALL BE PER ANNEX A3 OF TPI1 2002 SEC.3. A SEAL ON THIS DRAWING INDICATES ACCEPTANCE OF PROFESSIONAL ENGINEERING RESPONSIBILITY SOLELY FOR THE TRUSS COMPONENT DESIGN SHOWN. THE SUITABILITY AND USE OF THIS COMPONENT FOR ANY BUILDING IS THE RESPONSIBILITY OF THE BUILDING DESIGNER PER ANSI/TPI 1 SEC. 2.

JAMES F. COLLINS, JR. LICENSED No. 52212 STATE OF FLORIDA PROFESSIONAL ENGINEER

Jan 03,2007

TC LL	20.0 PSF	REF	R215-- 8793
TC DL	10.0 PSF	DATE	01/03/07
BC DL	10.0 PSF	DRW	HCUSR215 07003026
BC LL	0.0 PSF	HC-ENG	JK/WHK
TOT.LD.	40.0 PSF	SEQN-	158268
DUR.FAC.	1.25	FROM	CDM
SPACING	24.0"	JREF-	1T3P215_Z01

(4176-/Laurel Lakes Phase II Lot /J.L. DUPREE -- LAKE CITY, FL - D1)

Top chord 2x4 SP #2 N
Bot chord 2x4 SP #2 N
Webs 2x4 SP #2 N

Wind reactions based on MWFRS pressures.

See DWGS A11030EE1106 & GBLLETIN1106 for more requirements.

Deflection meets L/240 live and L/180 total load.

110 mph wind, 19.32 ft mean hgt, ASCE 7-02, CLOSED bldg, Located anywhere in roof, CAT II, EXP B, wind TC DL=5.0 psf, wind BC DL=5.0 psf.

Truss spaced at 24.0" OC designed to support 2-0-0 top chord outlookers. Cladding load shall not exceed 0.00 PSF. Top chord must not be cut or notched.

The overall height of this truss excluding overhang is 1-4-4.

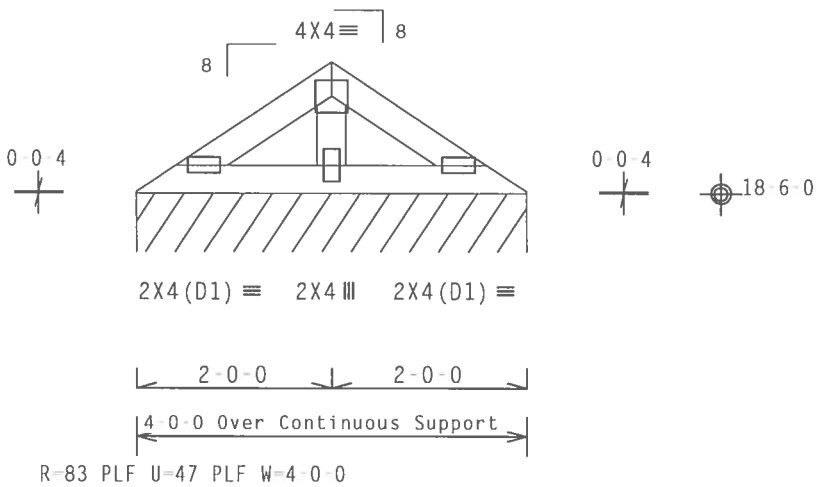

Design Crit: TPI-2002(STD)/FBC

PLT TYP. Wave Cq/RT=1.00(1.25)/10(0) 7.25.0502.23 QTY:1 FL/-/5/-/-/R/- Scale =.5"/Ft.

ALPINE
Alpine Engineered Products, Inc.
1950 Marley Drive
Haines City, FL 33844
FL Certificate of Authorization # 567

WARNING TRUSSES REQUIRE EXTREME CARE IN FABRICATION, HANDLING, SHIPPING, INSTALLING AND BRACING. REFER TO BCSI (BUILDING COMPONENT SAFETY INFORMATION), PUBLISHED BY TPI (TRUSS PLATE INSTITUTE, 218 NORTH LEE STREET, SUITE 312, ALEXANDRIA, VA, 22314) AND WTCA (WOOD TRUSS COUNCIL OF AMERICA, 6300 ENTERPRISE LANE, MADISON, WI 53719) FOR SAFETY PRACTICES PRIOR TO PERFORMING THESE FUNCTIONS. UNLESS OTHERWISE INDICATED TOP CHORD SHALL HAVE PROPERLY ATTACHED STRUCTURAL PANELS AND BOTTOM CHORD SHALL HAVE A PROPERLY ATTACHED RIGID CEILING.

IMPORTANT FURNISH A COPY OF THIS DESIGN TO THE INSTALLATION CONTRACTOR. ALPINE ENGINEERED PRODUCTS, INC. SHALL NOT BE RESPONSIBLE FOR ANY DEVIATION FROM THIS DESIGN; ANY FAILURE TO BUILD THE TRUSS IN CONFORMANCE WITH TPI; OR FABRICATING, HANDLING, SHIPPING, INSTALLING & BRACING OF TRUSSES. DESIGN CONFORMS WITH APPLICABLE PROVISIONS OF NDS (NATIONAL DESIGN SPEC. BY AF&PA) AND TPI. ALPINE CONNECTOR PLATES ARE MADE OF 20/18/16GA (W,H/SS/K) ASTM A653 GRADE 40/60 (W, K/H,SS) GALV. STEEL. APPLY PLATES TO EACH FACE OF TRUSS AND, UNLESS OTHERWISE LOCATED ON THIS DESIGN, POSITION PER DRAWINGS 160A Z. ANY INSPECTION OF PLATES FOLLOWED BY (I) SHALL BE PER ANNEX A3 OF TPI1-2002 SEC 3. A SEAL ON THIS DRAWING INDICATES ACCEPTANCE OF PROFESSIONAL ENGINEERING RESPONSIBILITY SOLELY FOR THE TRUSS COMPONENT DESIGN SHOWN. THE SUITABILITY AND USE OF THIS COMPONENT FOR ANY BUILDING IS THE RESPONSIBILITY OF THE BUILDING DESIGNER PER ANSI/TPI 1 SEC. 2.

JAMES F. COLLINS, JR. LICENSED No. 52212 STATE OF FLORIDA PROFESSIONAL ENGINEER

Jan 08

TC LL	20.0 PSF	REF	R215-- 8794
TC DL	10.0 PSF	DATE	01/03/07
BC DL	10.0 PSF	DRW	HCUSR215 07003029
BC LL	0.0 PSF	HC-ENG	JK/WHK
TOT.LD.	40.0 PSF	SEQN-	158212
DUR.FAC.	1.25	FROM	CDM
SPACING	24.0"	JREF-	1T3P215_Z01

(4176-/Laurel Lakes Phase II Lot /J.L. DUPREE -- LAKE CITY, FL - D2)

Top chord 2x4 SP #2 N
Bot chord 2x4 SP #2 N
Webs 2x4 SP #2 N

Wind reactions based on MWFRS pressures.

The overall height of this truss excluding overhang is 1-8-7.

110 mph wind, 19.20 ft mean hgt, ASCE 7-02, CLOSED bldg, Located anywhere in roof, CAT II, EXP B, wind TC DL=5.0 psf, wind BC DL=5.0 psf.

Deflection meets L/240 live and L/180 total load.

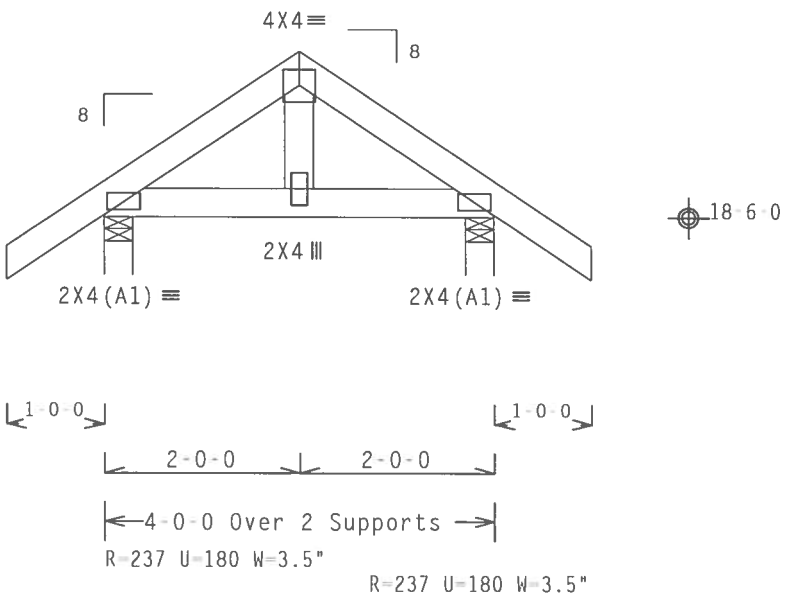

Design Crit: TPI-2002(STD)/FBC

PLT TYP. Wave Cq/RT=1.00(1.25)/10(0) 7.25.0502.23 QTY:3 FL/-/5/-/-/R/- Scale =.5"/Ft.

ALPINE
Alpine Engineered Products, Inc.
1950 Marley Drive
Haines City, FL 33844
FL Certificate of Authorization # 567

WARNING TRUSSES REQUIRE EXTREME CARE IN FABRICATION, HANDLING, SHIPPING, INSTALLING AND BRACING. REFER TO BCSI (BUILDING COMPONENT SAFETY INFORMATION), PUBLISHED BY TPI (TRUSS PLATE INSTITUTE, 218 NORTH LEE STREET, SUITE 312, ALEXANDRIA, VA. 22314) AND WTCA (WOOD TRUSS COUNCIL OF AMERICA, 6300 ENTERPRISE LANE, MADISON, WI 53719) FOR SAFETY PRACTICES PRIOR TO PERFORMING THESE FUNCTIONS. UNLESS OTHERWISE INDICATED TOP CHORD SHALL HAVE PROPERLY ATTACHED STRUCTURAL PANELS AND BOTTOM CHORD SHALL HAVE A PROPERLY ATTACHED RIGID CEILING.

IMPORTANT FURNISH A COPY OF THIS DESIGN TO THE INSTALLATION CONTRACTOR. ALPINE ENGINEERED PRODUCTS, INC. SHALL NOT BE RESPONSIBLE FOR ANY DEVIATION FROM THIS DESIGN; ANY FAILURE TO BUILD THE TRUSS IN CONFORMANCE WITH TPI; OR FABRICATING, HANDLING, SHIPPING, INSTALLING & BRACING OF TRUSSES. DESIGN CONFORMS WITH APPLICABLE PROVISIONS OF NDS (NATIONAL DESIGN SPEC. BY AF&PA) AND TPI. ALPINE CONNECTOR PLATES ARE MADE OF 20/18/16GA (W,H/SS/K) ASTM A653 GRADE 40/60 (H, K/H,SS) GALV. STEEL. APPLY PLATES TO EACH FACE OF TRUSS AND, UNLESS OTHERWISE LOCATED ON THIS DESIGN, POSITION PER DRAWINGS 160A Z. ANY INSPECTION OF PLATES FOLLOWED BY (1) SHALL BE PER ANNEX A3 OF TPI1 2002 SEC.3. A SEAL ON THIS DRAWING INDICATES ACCEPTANCE OF PROFESSIONAL ENGINEERING RESPONSIBILITY SOLELY FOR THE TRUSS COMPONENT DESIGN SHOWN. THE SUITABILITY AND USE OF THIS COMPONENT FOR ANY BUILDING IS THE RESPONSIBILITY OF THE BUILDING DESIGNER PER ANSI/TPI 1 SEC. 2.

JAMES F. COLLINS, JR. LICENSE No. 32212 STATE OF FLORIDA PROFESSIONAL ENGINEER

Jan 8, 2007

TC LL	20.0 PSF	REF	R215-- 8795
TC DL	10.0 PSF	DATE	01/03/07
BC DL	10.0 PSF	DRW	HCUSR215 07003008
BC LL	0.0 PSF	HC-ENG	JK/WHK *
TOT.LD.	40.0 PSF	SEQN-	158215
DUR.FAC.	1.25	FROM	CDM
SPACING	24.0"	JREF-	1T3P215_Z01

Top chord 2x4 SP #2 N
Bot chord 2x4 SP #2 N

Wind reactions based on MWFRS pressures.

The overall height of this truss excluding overhang is 1-0-7.

110 mph wind, 15.00 ft mean hgt, ASCE 7-02, CLOSED bldg, Located anywhere in roof, CAT II, EXP B, wind TC DL=5.0 psf, wind BC DL=5.0 psf.

Deflection meets L/240 live and L/180 total load.

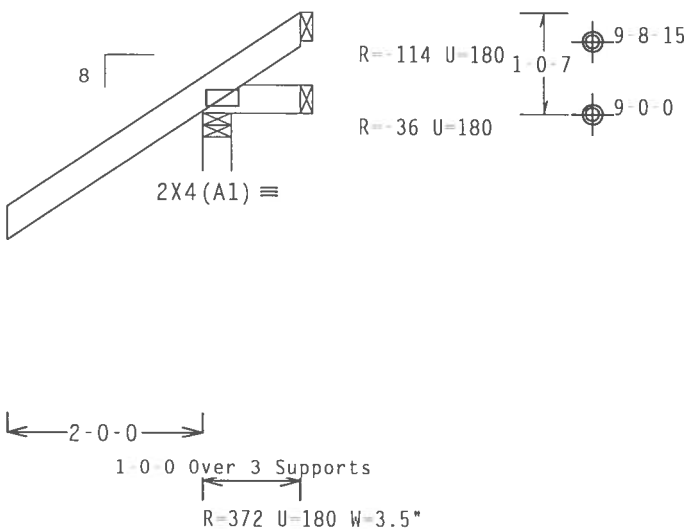

Design Crit: TPI-2002(STD)/FBC

PLT TYP. Wave

Cq/RT=1.00(1.25)/10(0) 7.25.0502 01.8 FL/-/5/-/-/R/- Scale =.5"/Ft.

ALPINE

Alpine Engineered Products, Inc.
1950 Marley Drive
Haines City, FL 33844
FL Certificate of Authorization # 567

WARNING TRUSSES REQUIRE EXTREME CARE IN FABRICATION, HANDLING, SHIPPING, INSTALLING AND BRACING. REFER TO BCSI (BUILDING COMPONENT SAFETY INFORMATION), PUBLISHED BY TPI (TRUSS PLATE INSTITUTE, 218 NORTH LEE STREET, SUITE 312, ALEXANDRIA, VA, 22314) AND WTCA (WOOD TRUSS COUNCIL OF AMERICA, 6300 ENTERPRISE LANE, MADISON, WI 53719) FOR SAFETY PRACTICES PRIOR TO PERFORMING THESE FUNCTIONS. UNLESS OTHERWISE INDICATED TOP CHORD SHALL HAVE PROPERLY ATTACHED STRUCTURAL PANELS AND BOTTOM CHORD SHALL HAVE A PROPERLY ATTACHED RIGID CEILING.

IMPORTANT FURNISH A COPY OF THIS DESIGN TO THE INSTALLATION CONTRACTOR. ALPINE ENGINEERED PRODUCTS, INC. SHALL NOT BE RESPONSIBLE FOR ANY DEVIATION FROM THIS DESIGN; ANY FAILURE TO BUILD THE TRUSS IN CONFORMANCE WITH TPI; OR FABRICATING, HANDLING, SHIPPING, INSTALLING & BRACING OF TRUSSES. DESIGN CONFORMS WITH APPLICABLE PROVISIONS OF NDS (NATIONAL DESIGN SPEC. BY AF&PA) AND TPI. ALPINE CONNECTOR PLATES ARE MADE OF 20/18/16GA (W,H/SS/K) ASTM A653 GRADE 40/60 (W, K/H,SS) GALV. STEEL. APPLY PLATES TO EACH FACE OF TRUSS AND, UNLESS OTHERWISE LOCATED ON THIS DESIGN, POSITION PER DRAWINGS 160A-Z. ANY INSPECTION OF PLATES FOLLOWED BY (1) SHALL BE PER ANNEX A3 OF TPI1-2002 SEC.3. A SEAL ON THIS DRAWING INDICATES ACCEPTANCE OF PROFESSIONAL ENGINEERING RESPONSIBILITY SOLELY FOR THE TRUSS COMPONENT DESIGN SHOWN. THE SUITABILITY AND USE OF THIS COMPONENT FOR ANY BUILDING IS THE RESPONSIBILITY OF THE BUILDING DESIGNER PER ANSI/TPI 1 SEC. 2.

JAMES R. COLLINS, JR. LICENSE No. 52312 STATE OF FLORIDA PROFESSIONAL ENGINEER

Jan 03 07

TC LL	20.0 PSF	REF	R215-- 8796
TC DL	10.0 PSF	DATE	01/03/07
BC DL	10.0 PSF	DRW	HCUSR215 07003028
BC LL	0.0 PSF	HC-ENG	JK/WHK
TOT.LD.	40.0 PSF	SEQN-	158356
DUR.FAC.	1.25	FROM	CDM
SPACING	24.0"	JREF-	1T3P215_Z01

THIS DWG PREPARED FROM COMPUTER INPUT (LOADS & DIMENSIONS) SUBMITTED BY TRUSS MFR.

Top chord 2x4 SP #2 N
Bot chord 2x4 SP #2 N

Wind reactions based on MWFRS pressures.

The overall height of this truss excluding overhang is 2-4-7.

110 mph wind, 15.00 ft mean hgt, ASCE 7-02, CLOSED bldg, Located anywhere in roof, CAT II, EXP B, wind TC DL=5.0 psf, wind BC DL=5.0 psf.

Deflection meets L/240 live and L/180 total load.

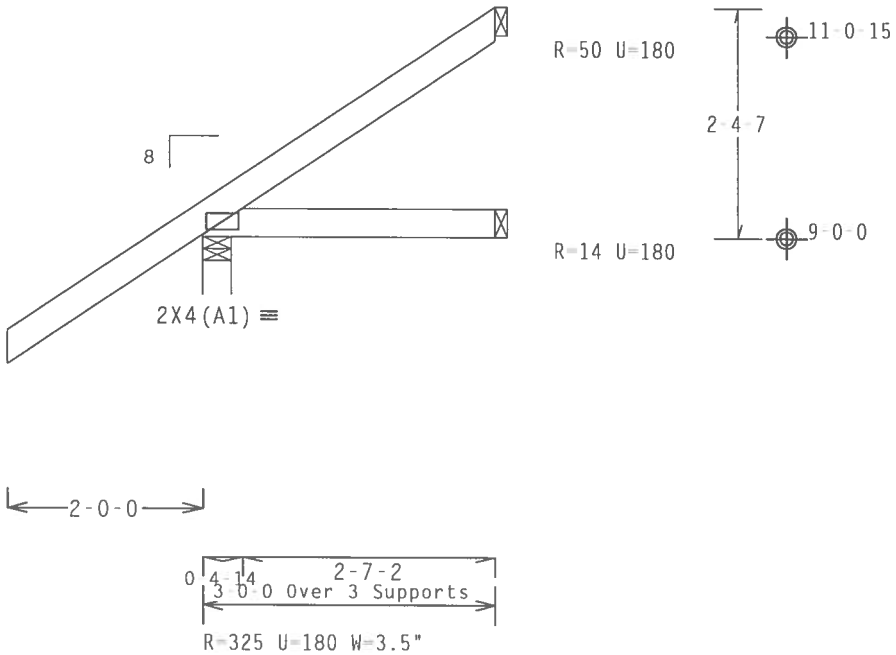

Design Crit: TPI-2002(STD)/FBC

PLT TYP. Wave — Cq/RT=1.00(1.25)/10(0) 7.25.0502.23 — QTY:8 — FL/-/5/-/-/R/- — Scale =.5"/Ft.

ALPINE
Alpine Engineered Products, Inc.
1950 Marley Drive
Haines City, FL 33844
FL Certificate of Authorization # 567

WARNING TRUSSES REQUIRE EXTREME CARE IN FABRICATION, HANDLING, SHIPPING, INSTALLING AND BRACING. REFER TO BCSI (BUILDING COMPONENT SAFETY INFORMATION), PUBLISHED BY TPI (TRUSS PLATE INSTITUTE, 218 NORTH LEE STREET, SUITE 312, ALEXANDRIA, VA, 22314) AND WTCA (WOOD TRUSS COUNCIL OF AMERICA, 6300 ENTERPRISE LANE, MADISON, WI 53719) FOR SAFETY PRACTICES PRIOR TO PERFORMING THESE FUNCTIONS. UNLESS OTHERWISE INDICATED TOP CHORD SHALL HAVE PROPERLY ATTACHED STRUCTURAL PANELS AND BOTTOM CHORD SHALL HAVE A PROPERLY ATTACHED RIGID CEILING.

IMPORTANT FURNISH A COPY OF THIS DESIGN TO THE INSTALLATION CONTRACTOR. ALPINE ENGINEERED PRODUCTS, INC. SHALL NOT BE RESPONSIBLE FOR ANY DEVIATION FROM THIS DESIGN; ANY FAILURE TO BUILD THE TRUSS IN CONFORMANCE WITH TPI; OR FABRICATING, HANDLING, SHIPPING, INSTALLING & BRACING OF TRUSSES. DESIGN CONFORMS WITH APPLICABLE PROVISIONS OF NDS (NATIONAL DESIGN SPEC, BY AF&PA) AND TPI. ALPINE CONNECTOR PLATES ARE MADE OF 20/18/16GA (W,H/SS/K) ASTM A653 GRADE 40/60 (W, K/H,SS) GALV. STEEL. APPLY PLATES TO EACH FACE OF TRUSS AND, UNLESS OTHERWISE LOCATED ON THIS DESIGN, POSITION PER DRAWINGS 160A Z. ANY INSPECTION OF PLATES FOLLOWED BY (1) SHALL BE PER ANNEX A3 OF TPI1 2002 SEC 3. A SEAL ON THIS DRAWING INDICATES ACCEPTANCE OF PROFESSIONAL ENGINEERING RESPONSIBILITY SOLELY FOR THE TRUSS COMPONENT DESIGN SHOWN. THE SUITABILITY AND USE OF THIS COMPONENT FOR ANY BUILDING IS THE RESPONSIBILITY OF THE BUILDING DESIGNER PER ANSI/TPI 1 SEC. 2.

JAMES F. COLLINS JR. LICENSE No 52272 STATE OF FLORIDA PROFESSIONAL ENGINEER

Jan 0[illegible]

TC LL	20.0 PSF	REF	R215-- 8797
TC DL	10.0 PSF	DATE	01/03/07
BC DL	10.0 PSF	DRW	HCUSR215 07003009
BC LL	0.0 PSF	HC-ENG	JK/WHK *
TOT.LD.	40.0 PSF	SEQN-	158358
DUR.FAC.	1.25	FROM	CDM
SPACING	24.0"	JREF-	1T3P215_Z01

Top chord 2x4 SP #2 N
Bot chord 2x4 SP #2 N

Wind reactions based on MWFRS pressures.

The overall height of this truss excluding overhang is 3-8-7.

110 mph wind, 15.00 ft mean hgt, ASCE 7-02, CLOSED bldg, not located within 4.50 ft from roof edge, CAT II, EXP B, wind TC DL=5.0 psf, wind BC DL=5.0 psf.

Deflection meets L/240 live and L/180 total load.

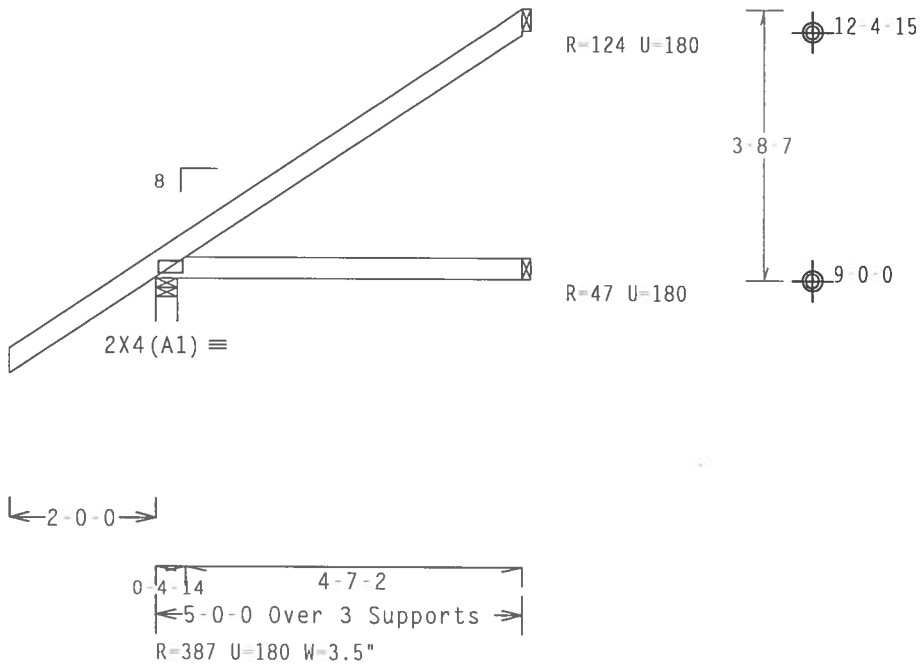

Design Crit: TPI-2002(STD)/FBC
Cq/RT=1.00(1.25)/10(0) 7.25.0502 QTY:3 FL/-/5/-/-/R/- Scale =.375"/Ft.

PLT TYP. Wave

ALPINE
Alpine Engineered Products, Inc.
1950 Marley Drive
Haines City, FL 33844
FL Certificate of Authorization # 567

WARNING TRUSSES REQUIRE EXTREME CARE IN FABRICATION, HANDLING, SHIPPING, INSTALLING AND BRACING. REFER TO BCSI (BUILDING COMPONENT SAFETY INFORMATION), PUBLISHED BY TPI (TRUSS PLATE INSTITUTE, 218 NORTH LEE STREET, SUITE 312, ALEXANDRIA, VA, 22314) AND WTCA (WOOD TRUSS COUNCIL OF AMERICA, 6300 ENTERPRISE LANE, MADISON, WI 53719) FOR SAFETY PRACTICES PRIOR TO PERFORMING THESE FUNCTIONS. UNLESS OTHERWISE INDICATED TOP CHORD SHALL HAVE PROPERLY ATTACHED STRUCTURAL PANELS AND BOTTOM CHORD SHALL HAVE A PROPERLY ATTACHED RIGID CEILING.

IMPORTANT FURNISH A COPY OF THIS DESIGN TO THE INSTALLATION CONTRACTOR. ALPINE ENGINEERED PRODUCTS, INC. SHALL NOT BE RESPONSIBLE FOR ANY DEVIATION FROM THIS DESIGN; ANY FAILURE TO BUILD THE TRUSS IN CONFORMANCE WITH TPI; OR FABRICATING, HANDLING, SHIPPING, INSTALLING & BRACING OF TRUSSES. DESIGN CONFORMS WITH APPLICABLE PROVISIONS OF NDS (NATIONAL DESIGN SPEC. BY AF&PA) AND TPI. ALPINE CONNECTOR PLATES ARE MADE OF 20/18/16GA (W,H/SS/K) ASTM A653 GRADE 40/60 (W, K/H,SS) GALV. STEEL. APPLY PLATES TO EACH FACE OF TRUSS AND, UNLESS OTHERWISE LOCATED ON THIS DESIGN, POSITION PER DRAWINGS 160A Z. ANY INSPECTION OF PLATES FOLLOWED BY (1) SHALL BE PER ANNEX A3 OF TPI1 2002 SEC 3. A SEAL ON THIS DRAWING INDICATES ACCEPTANCE OF PROFESSIONAL ENGINEERING RESPONSIBILITY SOLELY FOR THE TRUSS COMPONENT DESIGN SHOWN. THE SUITABILITY AND USE OF THIS COMPONENT FOR ANY BUILDING IS THE RESPONSIBILITY OF THE BUILDING DESIGNER PER ANSI/TPI 1 SEC 2.

JAMES F. COLLINS LICENSE No. 52212 STATE OF FLORIDA PROFESSIONAL ENGINEER

Jan 03 07

TC LL	20.0 PSF	REF R215-- 8798
TC DL	10.0 PSF	DATE 01/03/07
BC DL	10.0 PSF	DRW HCUSR215 07003010
BC LL	0.0 PSF	HC-ENG JK/WHK *
TOT.LD.	40.0 PSF	SEQN- 158360
DUR.FAC.	1.25	FROM CDM
SPACING	24.0"	JREF- 1T3P215_Z01

(4176-/Laurel Lakes Phase II Lot /J.L. DUPREE -- LAKE CITY, FL - JE7)

Top chord 2x4 SP #2 N
Bot chord 2x4 SP #2 N

Wind reactions based on MWFRS pressures.

The overall height of this truss excluding overhang is 5-0-7.

110 mph wind, 15.00 ft mean hgt, ASCE 7-02, CLOSED bldg, not located within 4.50 ft from roof edge, CAT II, EXP B, wind TC DL=5.0 psf, wind BC DL=5.0 psf.

Deflection meets L/240 live and L/180 total load.

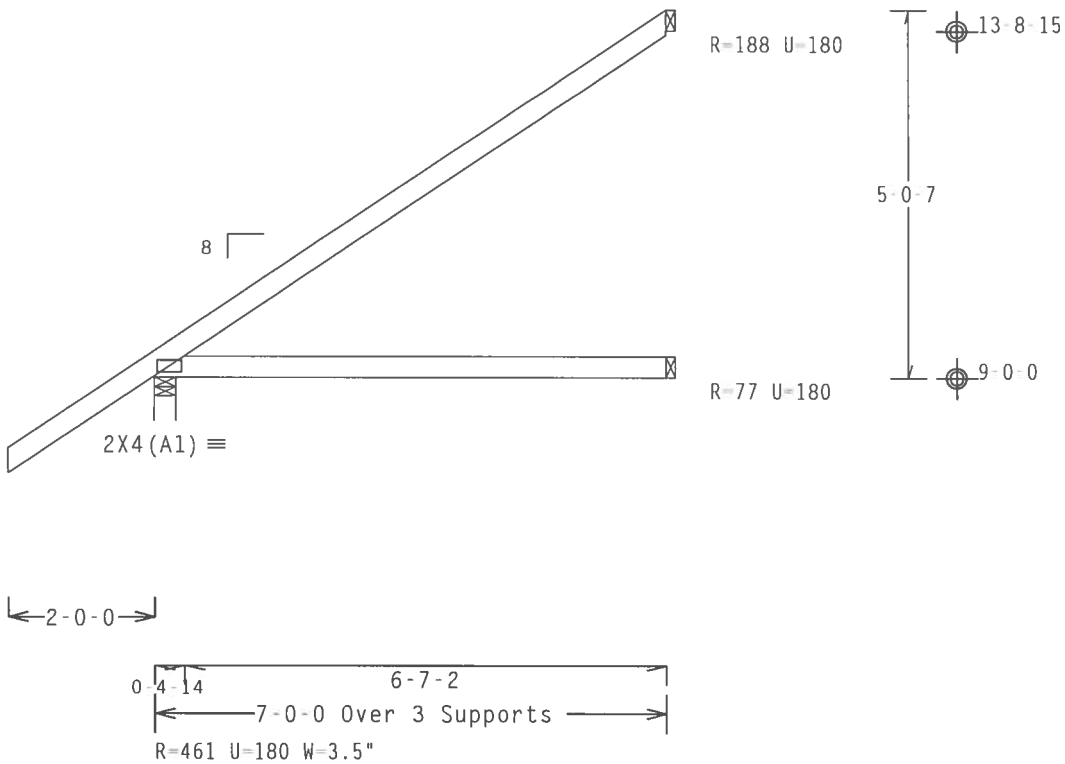

Design Crit: TPI-2002(STD)/FBC

PLT TYP. Wave Cq/RT=1.00(1.25)/10(0) 7.25.0502 QTY:34 FL/-/5/-/-/R/- Scale =.375"/Ft.

ALPINE
Alpine Engineered Products, Inc.
1950 Marley Drive
Haines City, FL 33844
FL Certificate of Authorization # 567

WARNING TRUSSES REQUIRE EXTREME CARE IN FABRICATION, HANDLING, SHIPPING, INSTALLING AND BRACING. REFER TO BCSI (BUILDING COMPONENT SAFETY INFORMATION), PUBLISHED BY TPI (TRUSS PLATE INSTITUTE, 218 NORTH LEE STREET, SUITE 312, ALEXANDRIA, VA. 22314) AND WTCA (WOOD TRUSS COUNCIL OF AMERICA, 6300 ENTERPRISE LANE, MADISON, WI 53719) FOR SAFETY PRACTICES PRIOR TO PERFORMING THESE FUNCTIONS. UNLESS OTHERWISE INDICATED TOP CHORD SHALL HAVE PROPERLY ATTACHED STRUCTURAL PANELS AND BOTTOM CHORD SHALL HAVE A PROPERLY ATTACHED RIGID CEILING.

IMPORTANT FURNISH A COPY OF THIS DESIGN TO THE INSTALLATION CONTRACTOR. ALPINE ENGINEERED PRODUCTS, INC. SHALL NOT BE RESPONSIBLE FOR ANY DEVIATION FROM THIS DESIGN; ANY FAILURE TO BUILD THE TRUSS IN CONFORMANCE WITH TPI; OR FABRICATING, HANDLING, SHIPPING, INSTALLING & BRACING OF TRUSSES. DESIGN CONFORMS WITH APPLICABLE PROVISIONS OF NDS (NATIONAL DESIGN SPEC. BY AF&PA) AND TPI. ALPINE CONNECTOR PLATES ARE MADE OF 20/18/16GA (W,H/SS/K) ASTM A653 GRADE 40/60 (W, K/H,SS) GALV. STEEL. APPLY PLATES TO EACH FACE OF TRUSS AND, UNLESS OTHERWISE LOCATED ON THIS DESIGN, POSITION PER DRAWINGS 160A-Z. ANY INSPECTION OF PLATES FOLLOWED BY (i) SHALL BE PER ANNEX A3 OF TPI1-2002 SEC.3. A SEAL ON THIS DRAWING INDICATES ACCEPTANCE OF PROFESSIONAL ENGINEERING RESPONSIBILITY SOLELY FOR THE TRUSS COMPONENT DESIGN SHOWN. THE SUITABILITY AND USE OF THIS COMPONENT FOR ANY BUILDING IS THE RESPONSIBILITY OF THE BUILDING DESIGNER PER ANSI/TPI 1 SEC. 2.

JAMES F. COLLINS JR. LICENSED No. 52212 STATE OF FLORIDA PROFESSIONAL ENGINEER

Jan 03-07

TC LL	20.0 PSF	REF	R215-- 8799
TC DL	10.0 PSF	DATE	01/03/07
BC DL	10.0 PSF	DRW	HCUSR215 07003011
BC LL	0.0 PSF	HC-ENG	JK/WHK *
TOT.LD.	40.0 PSF	SEQN-	158362
DUR.FAC.	1.25	FROM	CDM
SPACING	24.0"	JREF-	1T3P215_Z01

THIS DWG PREPARED FROM COMPUTER INPUT (LOADS & DIMENSIONS) SUBMITTED BY TRUSS MFR.

Top chord 2x4 SP #2 N
Bot chord 2x4 SP #2 N
Webs 2x4 SP #2 N

Wind reactions based on MWFRS pressures.

Deflection meets L/240 live and L/180 total load.

Top chord overhangs have been checked only for loads as indicates. Overhangs not checked for man loads or long-term deflection.

* TOENAIL AVERAGE BASED ON AVERAGE REACTIONS

110 mph wind, 15.00 ft mean hgt, ASCE 7-02, CLOSED bldg, Located anywhere in roof, CAT II, EXP B, wind TC DL=5.0 psf, wind BC DL=5.0 psf.

Hipjack supports 7-0-0 setback jacks with no webs.

The overall height of this truss excluding overhang is 5-0-2.

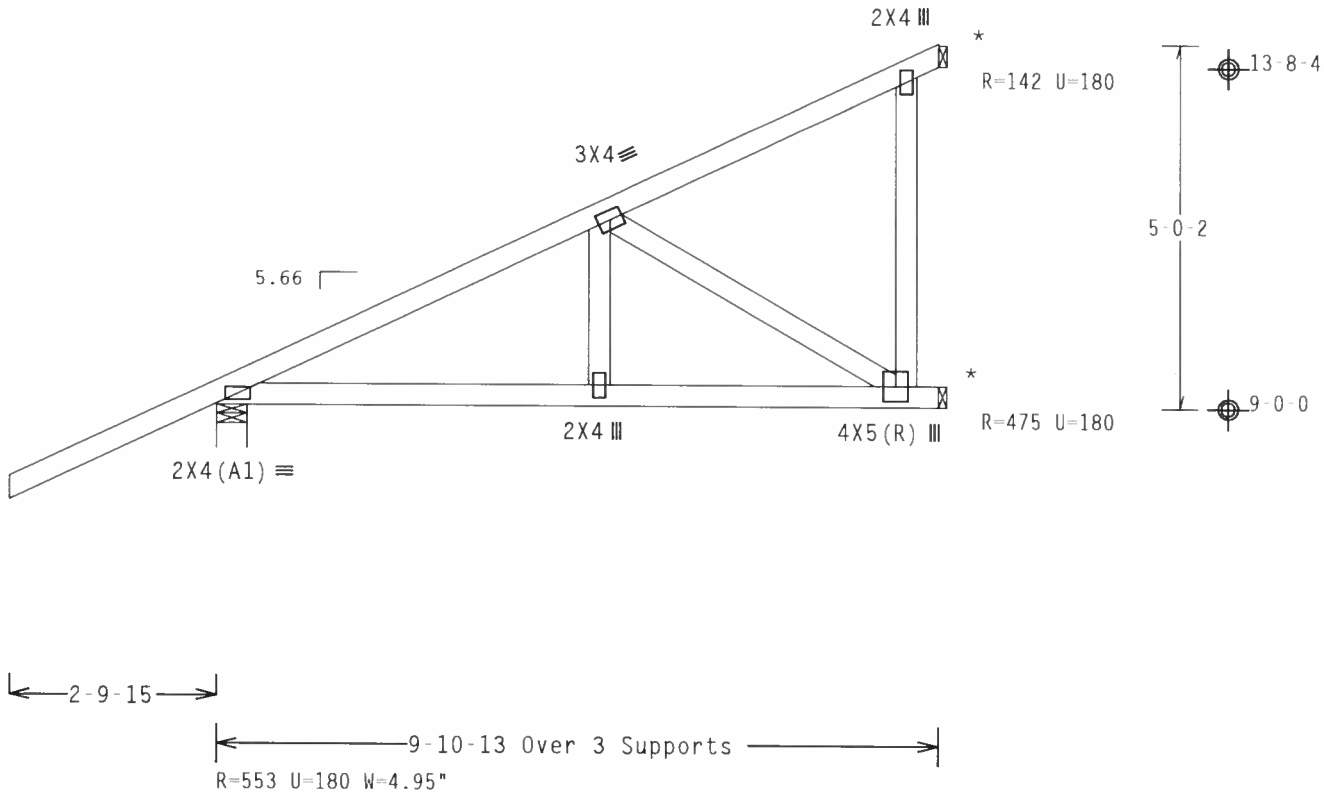

Design Crit: TPI-2002(STD)/FBC
PLT TYP. Wave Cq/RT=1.00(1.25)/10(0) 7.25.0502 QTY 4 FL/-/5/-/-/R/- Scale =.375"/Ft.

ALPINE
Alpine Engineered Products, Inc.
1950 Marley Drive
Haines City, FL 33844
FL Certificate of Authorization # 567

WARNING TRUSSES REQUIRE EXTREME CARE IN FABRICATION, HANDLING, SHIPPING, INSTALLING AND BRACING. REFER TO BCSI (BUILDING COMPONENT SAFETY INFORMATION), PUBLISHED BY TPI (TRUSS PLATE INSTITUTE, 218 NORTH LEE STREET, SUITE 312, ALEXANDRIA, VA, 22314) AND WTCA (WOOD TRUSS COUNCIL OF AMERICA, 6300 ENTERPRISE LANE, MADISON, WI 53719) FOR SAFETY PRACTICES PRIOR TO PERFORMING THESE FUNCTIONS. UNLESS OTHERWISE INDICATED TOP CHORD SHALL HAVE PROPERLY ATTACHED STRUCTURAL PANELS AND BOTTOM CHORD SHALL HAVE A PROPERLY ATTACHED RIGID CEILING.

IMPORTANT FURNISH A COPY OF THIS DESIGN TO THE INSTALLATION CONTRACTOR. ALPINE ENGINEERED PRODUCTS, INC. SHALL NOT BE RESPONSIBLE FOR ANY DEVIATION FROM THIS DESIGN; ANY FAILURE TO BUILD THE TRUSS IN CONFORMANCE WITH TPI; OR FABRICATING, HANDLING, SHIPPING, INSTALLING & BRACING OF TRUSSES. DESIGN CONFORMS WITH APPLICABLE PROVISIONS OF NDS (NATIONAL DESIGN SPEC. BY AFAPA) AND TPI. ALPINE CONNECTOR PLATES ARE MADE OF 20/18/16GA (W,H/SS/K) ASTM A653 GRADE 40/60 (W, K/H,SS) GALV. STEEL. APPLY PLATES TO EACH FACE OF TRUSS AND, UNLESS OTHERWISE LOCATED ON THIS DESIGN, POSITION PER DRAWINGS 160A Z. ANY INSPECTION OF PLATES FOLLOWED BY (I) SHALL BE PER ANNEX A3 OF TPI1 2002 SEC.3. A SEAL ON THIS DRAWING INDICATES ACCEPTANCE OF PROFESSIONAL ENGINEERING RESPONSIBILITY SOLELY FOR THE TRUSS COMPONENT DESIGN SHOWN. THE SUITABILITY AND USE OF THIS COMPONENT FOR ANY BUILDING IS THE RESPONSIBILITY OF THE BUILDING DESIGNER PER ANSI/TPI 1 SEC. 2.

JAMES F. COLLINS, JR. LICENSE No. 52212 STATE OF FLORIDA PROFESSIONAL ENGINEER
Jan 03, 2007

TC LL	20.0 PSF	REF R215-- 8800
TC DL	10.0 PSF	DATE 01/03/07
BC DL	10.0 PSF	DRW HCUSR215 07003027
BC LL	0.0 PSF	HC-ENG JK/WHK
TOT.LD.	40.0 PSF	SEQN- 158242
DUR.FAC.	1.25	FROM CDM
SPACING	24.0"	JREF- 1T3P215 Z01

(4176 /Laurel Lakes Phase II Lot /J.L. DUPREE -- LAKE CITY, FL - PB1)

Top chord 2x4 SP #2 N
Bot chord 2x4 SP #2 N
Webs 2x4 SP #2 N

Wind reactions based on MWFRS pressures.

Deflection meets L/240 live and L/180 total load.

REFER TO DRAWING PIGBACKB0204 FOR PIGGYBACK DETAILS.
TOP CHORD OF SUPPORTING TRUSS UNDER PIGGYBACK TO BE BRACED @ 24" O.C.

110 mph wind, 20.04 ft mean hgt, ASCE 7-02, CLOSED bldg, not located within 4.50 ft from roof edge, CAT II, EXP B, wind TC DL=5.0 psf, wind BC DL=1.2 psf.

In lieu of structural panels or rigid ceiling use purlins to brace all flat TC @ 24" OC, all BC @ 24" OC.

The overall height of this truss excluding overhang is 1-4-0.

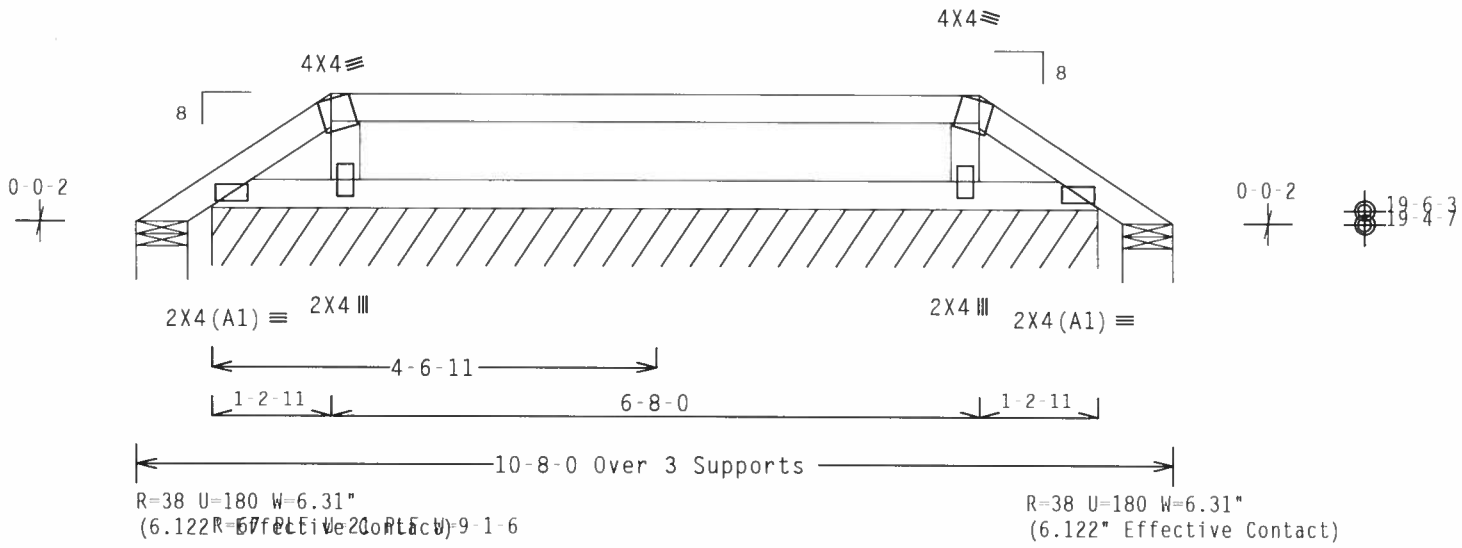

Design Crit: TPI-2002(STD)/FBC
Cq/RT=1.00(1.25)/10(0) 7.25.0502

PLT TYP. Wave QTY:2 FL/-/5/-/-/R/- Scale =.5"/Ft.

ALPINE
Alpine Engineered Products, Inc.
1950 Marley Drive
Haines City, FL 33844
FL Certificate of Authorization # 567

WARNING TRUSSES REQUIRE EXTREME CARE IN FABRICATION, HANDLING, SHIPPING, INSTALLING AND BRACING. REFER TO BCSI (BUILDING COMPONENT SAFETY INFORMATION), PUBLISHED BY TPI (TRUSS PLATE INSTITUTE, 218 NORTH LEE STREET, SUITE 312, ALEXANDRIA, VA, 22314) AND WTCA (WOOD TRUSS COUNCIL OF AMERICA, 6300 ENTERPRISE LANE, MADISON, WI 53719) FOR SAFETY PRACTICES PRIOR TO PERFORMING THESE FUNCTIONS. UNLESS OTHERWISE INDICATED TOP CHORD SHALL HAVE PROPERLY ATTACHED STRUCTURAL PANELS AND BOTTOM CHORD SHALL HAVE A PROPERLY ATTACHED RIGID CEILING.

IMPORTANT FURNISH A COPY OF THIS DESIGN TO THE INSTALLATION CONTRACTOR. ALPINE ENGINEERED PRODUCTS, INC. SHALL NOT BE RESPONSIBLE FOR ANY DEVIATION FROM THIS DESIGN; ANY FAILURE TO BUILD THE TRUSS IN CONFORMANCE WITH TPI; OR FABRICATING, HANDLING, SHIPPING, INSTALLING & BRACING OF TRUSSES. DESIGN CONFORMS WITH APPLICABLE PROVISIONS OF NDS (NATIONAL DESIGN SPEC, BY AF&PA) AND TPI. ALPINE CONNECTOR PLATES ARE MADE OF 20/18/16GA (W,H/SS/K) ASTM A653 GRADE 40/60 (W, K/H,SS) GALV. STEEL. APPLY PLATES TO EACH FACE OF TRUSS AND, UNLESS OTHERWISE LOCATED ON THIS DESIGN, POSITION PER DRAWINGS 160A Z. ANY INSPECTION OF PLATES FOLLOWED BY (1) SHALL BE PER ANNEX A3 OF TPI1 2002 SEC.3. A SEAL ON THIS DRAWING INDICATES ACCEPTANCE OF PROFESSIONAL ENGINEERING RESPONSIBILITY SOLELY FOR THE TRUSS COMPONENT DESIGN SHOWN. THE SUITABILITY AND USE OF THIS COMPONENT FOR ANY BUILDING IS THE RESPONSIBILITY OF THE BUILDING DESIGNER PER ANSI/TPI 1 SEC. 2.

JAMES F. COLLINS, JR. LICENSE No. 52212 STATE OF FLORIDA PROFESSIONAL ENGINEER
Jan 03-07

TC LL	20.0 PSF	REF R215-- 8801
TC DL	10.0 PSF	DATE 01/03/07
BC DL	2.0 PSF	DRW HCUSR215 07003030
BC LL	0.0 PSF	HC-ENG JK/WHK
TOT.LD.	32.0 PSF	SEQN- 158224
DUR.FAC.	1.25	FROM CDM
SPACING	24.0"	JREF- 1T3P215 Z01

THIS DWG PREPARED FROM COMPUTER INPUT (LOADS & DIMENSIONS) SUBMITTED BY TRUSS MFR.

Top chord 2x4 SP #2 N
Bot chord 2x4 SP #2 N
Webs 2x4 SP #2 N

Wind reactions based on MWFRS pressures.

Deflection meets L/240 live and L/180 total load.

REFER TO DRAWING PIGBACKB0204 FOR PIGGYBACK DETAILS.
TOP CHORD OF SUPPORTING TRUSS UNDER PIGGYBACK TO BE BRACED @ 24" O.C.

110 mph wind, 20.71 ft mean hgt, ASCE 7-02, CLOSED bldg, not located within 4.50 ft from roof edge, CAT II, EXP B, wind TC DL=5.0 psf, wind BC DL=1.2 psf.

In lieu of structural panels or rigid ceiling use purlins to brace all flat TC @ 24" OC, all BC @ 24" OC.

The overall height of this truss excluding overhang is 2-8-0.

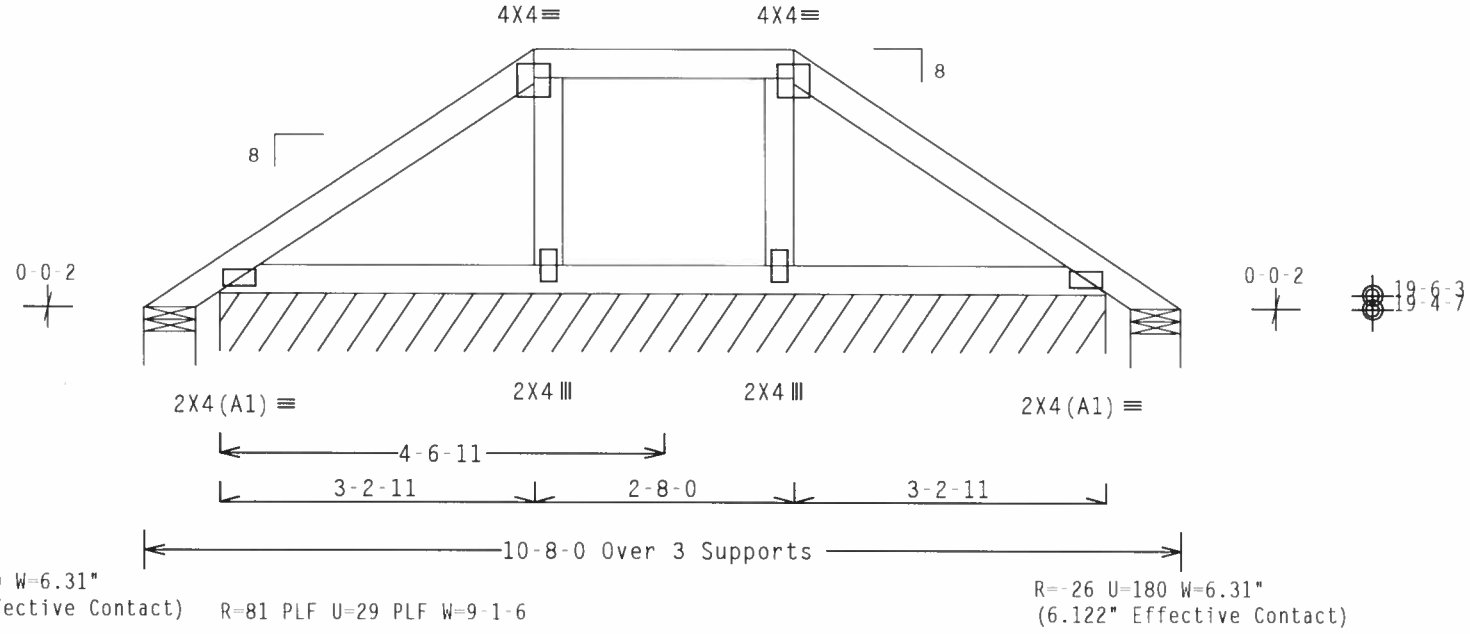

Design Crit: TPI-2002(STD)/FBC

PLT TYP. Wave — Cq/RT=1.00(1.25)/10(0) 7.25.0502.22 — QTY:2 — FL/-/5/-/-/R/- — Scale =.5"/Ft.

ALPINE
Alpine Engineered Products, Inc.
1950 Marley Drive
Haines City, FL 33844
FL Certificate of Authorization # 567

WARNING TRUSSES REQUIRE EXTREME CARE IN FABRICATION, HANDLING, SHIPPING, INSTALLING AND BRACING. REFER TO BCSI (BUILDING COMPONENT SAFETY INFORMATION), PUBLISHED BY TPI (TRUSS PLATE INSTITUTE, 218 NORTH LEE STREET, SUITE 312, ALEXANDRIA, VA. 22314) AND WTCA (WOOD TRUSS COUNCIL OF AMERICA, 6300 ENTERPRISE LANE, MADISON, WI 53719) FOR SAFETY PRACTICES PRIOR TO PERFORMING THESE FUNCTIONS. UNLESS OTHERWISE INDICATED TOP CHORD SHALL HAVE PROPERLY ATTACHED STRUCTURAL PANELS AND BOTTOM CHORD SHALL HAVE A PROPERLY ATTACHED RIGID CEILING.

IMPORTANT FURNISH A COPY OF THIS DESIGN TO THE INSTALLATION CONTRACTOR. ALPINE ENGINEERED PRODUCTS, INC. SHALL NOT BE RESPONSIBLE FOR ANY DEVIATION FROM THIS DESIGN; ANY FAILURE TO BUILD THE TRUSS IN CONFORMANCE WITH TPI; OR FABRICATING, HANDLING, SHIPPING, INSTALLING & BRACING OF TRUSSES. DESIGN CONFORMS WITH APPLICABLE PROVISIONS OF NDS (NATIONAL DESIGN SPEC. BY AF&PA) AND TPI. ALPINE CONNECTOR PLATES ARE MADE OF 20/18/16GA (W,H/SS/K) ASTM A653 GRADE 40/60 (W, K/H,SS) GALV. STEEL. APPLY PLATES TO EACH FACE OF TRUSS AND, UNLESS OTHERWISE LOCATED ON THIS DESIGN, POSITION PER DRAWINGS 160A Z. ANY INSPECTION OF PLATES FOLLOWED BY (1) SHALL BE PER ANNEX A3 OF TPI1 2002 SEC.3. A SEAL ON THIS DRAWING INDICATES ACCEPTANCE OF PROFESSIONAL ENGINEERING RESPONSIBILITY SOLELY FOR THE TRUSS COMPONENT DESIGN SHOWN. THE SUITABILITY AND USE OF THIS COMPONENT FOR ANY BUILDING IS THE RESPONSIBILITY OF THE BUILDING DESIGNER PER ANSI/TPI 1 SEC. 2.

JAMES F. COLLINS, JR. LICENSE No. 52212 STATE OF FLORIDA PROFESSIONAL ENGINEER

Jan

TC LL	20.0 PSF	REF R215-- 8802
TC DL	10.0 PSF	DATE 01/03/07
BC DL	2.0 PSF	DRW HCUSR215 07003031
BC LL	0.0 PSF	HC-ENG JK/WHK
TOT.LD.	32.0 PSF	SEQN- 158221
DUR.FAC.	1.25	FROM CDM
SPACING	24.0"	JREF- 1T3P215_Z01

(4176-/Laurel Lakes Phase II Lot /J.L. DUPREE -- LAKE CITY, FL - PB3)

Top chord 2x4 SP #2 N
Bot chord 2x4 SP #2 N
Webs 2x4 SP #2 N

The overall height of this truss excluding overhang is 3-6-11.

REFER TO DRAWING PIGBACKB0204 FOR PIGGYBACK DETAILS.
TOP CHORD OF SUPPORTING TRUSS UNDER PIGGYBACK TO BE BRACED @ 24" O.C.

110 mph wind, 20.71 ft mean hgt, ASCE 7-02, CLOSED bldg, not located within 4.50 ft from roof edge, CAT II, EXP B, wind TC DL=5.0 psf, wind BC DL=1.2 psf.

Deflection meets L/240 live and L/180 total load.

In lieu of rigid ceiling use purlins to brace BC @ 24" OC.

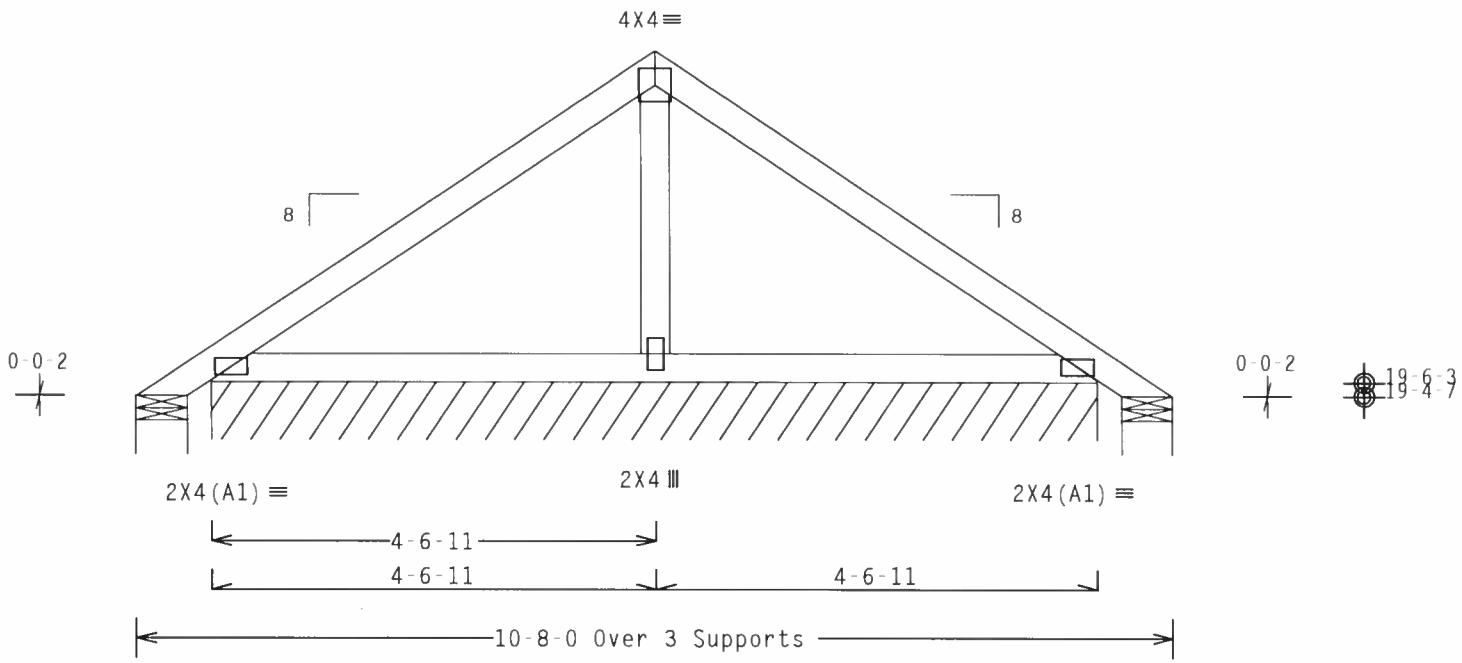

R=-79 U=180 W=6.31"
(6.122" Effective Contact)

R=93 PLF U=60 PLF W=9-1-6

R=-79 U=180 W=6.31"
(6.122" Effective Contact)

Design Crit: TPI-2002(STD)/FBC
Cq/RT=1.00(1.25)/10(0) 7.25.0503.43

PLT TYP. Wave QTY:8 FL/-/5/-/-/R/- Scale =.5"/Ft.

ALPINE
Alpine Engineered Products, Inc.
1950 Marley Drive
Haines City, FL 33844
FL Certificate of Authorization # 567

WARNING TRUSSES REQUIRE EXTREME CARE IN FABRICATION, HANDLING, SHIPPING, INSTALLING AND BRACING. REFER TO BCSI (BUILDING COMPONENT SAFETY INFORMATION), PUBLISHED BY TPI (TRUSS PLATE INSTITUTE, 218 NORTH LEE STREET, SUITE 312, ALEXANDRIA, VA. 22314) AND WTCA (WOOD TRUSS COUNCIL OF AMERICA, 6300 ENTERPRISE LANE, MADISON, WI 53719) FOR SAFETY PRACTICES PRIOR TO PERFORMING THESE FUNCTIONS. UNLESS OTHERWISE INDICATED TOP CHORD SHALL HAVE PROPERLY ATTACHED STRUCTURAL PANELS AND BOTTOM CHORD SHALL HAVE A PROPERLY ATTACHED RIGID CEILING.

IMPORTANT FURNISH A COPY OF THIS DESIGN TO THE INSTALLATION CONTRACTOR. ALPINE ENGINEERED PRODUCTS, INC. SHALL NOT BE RESPONSIBLE FOR ANY DEVIATION FROM THIS DESIGN; ANY FAILURE TO BUILD THE TRUSS IN CONFORMANCE WITH TPI; OR FABRICATING, HANDLING, SHIPPING, INSTALLING & BRACING OF TRUSSES. DESIGN CONFORMS WITH APPLICABLE PROVISIONS OF NDS (NATIONAL DESIGN SPEC. BY AF&PA) AND TPI. ALPINE CONNECTOR PLATES ARE MADE OF 20/18/16GA (W,H/SS/K) ASTM A653 GRADE 40/60 (W, K/H,SS) GALV. STEEL. APPLY PLATES TO EACH FACE OF TRUSS AND, UNLESS OTHERWISE LOCATED ON THIS DESIGN, POSITION PER DRAWINGS 160A Z. ANY INSPECTION OF PLATES FOLLOWED BY (I) SHALL BE PER ANNEX A3 OF TPI1 2002 SEC.3. A SEAL ON THIS DRAWING INDICATES ACCEPTANCE OF PROFESSIONAL ENGINEERING RESPONSIBILITY SOLELY FOR THE TRUSS COMPONENT DESIGN SHOWN. THE SUITABILITY AND USE OF THIS COMPONENT FOR ANY BUILDING IS THE RESPONSIBILITY OF THE BUILDING DESIGNER PER ANSI/TPI 1 SEC. 2.

JAMES F. COLLINS, JR. LICENSE No. 52212 STATE OF FLORIDA PROFESSIONAL ENGINEER
Jan 03 '07

TC LL	20.0 PSF	REF	R215-- 8803
TC DL	10.0 PSF	DATE	01/03/07
BC DL	2.0 PSF	DRW	HCUSR215 07003032
BC LL	0.0 PSF	HC-ENG	JK/WHK
TOT.LD.	32.0 PSF	SEQN-	158218
DUR.FAC.	1.25	FROM	CDM
SPACING	24.0"	JREF-	1T3P215_Z01

ASCE 7-02: 110 MPH WIND SPEED, 15' MEAN HEIGHT, ENCLOSED, I = 1.00, EXPOSURE C

MAX GABLE VERTICAL LENGTH

2X4 GABLE VERTICAL SPACING	SPECIES	BRACE GRADE	NO BRACES	(1) 1X4 "L" BRACE * GROUP A	(1) 1X4 "L" BRACE * GROUP B	(1) 2X4 "L" BRACE * GROUP A	(1) 2X4 "L" BRACE * GROUP B	(2) 2X4 "L" BRACE ** GROUP A	(2) 2X4 "L" BRACE ** GROUP B	(1) 2X6 "L" BRACE * GROUP A	(1) 2X6 "L" BRACE * GROUP B	(2) 2X6 "L" BRACE ** GROUP A	(2) 2X6 "L" BRACE ** GROUP B
24" O.C.	SPF HF	#1 / #2	3' 10"	6' 8"	6' 10"	7' 11"	8' 1"	9' 5"	9' 8"	12' 5"	12' 9"	14' 0"	14' 0"
		#3	3' 9"	6' 0"	6' 0"	7' 11"	7' 11"	9' 5"	9' 5"	12' 4"	12' 4"	14' 0"	14' 0"
		STUD	3' 9"	6' 0"	6' 0"	7' 11"	7' 11"	9' 5"	9' 5"	12' 3"	12' 3"	14' 0"	14' 0"
		STANDARD	3' 9"	5' 2"	5' 2"	6' 9"	6' 9"	9' 1"	9' 1"	10' 7"	10' 7"	14' 0"	14' 0"
	SP DFL	#1	4' 3"	6' 8"	7' 2"	7' 11"	8' 6"	9' 5"	10' 2"	12' 5"	13' 5"	14' 0"	14' 0"
		#2	4' 2"	6' 8"	7' 2"	7' 11"	8' 6"	9' 5"	10' 2"	12' 5"	13' 5"	14' 0"	14' 0"
		#3	4' 0"	6' 2"	6' 2"	7' 11"	8' 1"	9' 5"	9' 11"	12' 5"	12' 8"	14' 0"	14' 0"
		STUD	4' 0"	6' 1"	6' 1"	7' 11"	8' 0"	9' 5"	9' 11"	12' 5"	12' 6"	14' 0"	14' 0"
		STANDARD	3' 10"	5' 3"	5' 3"	6' 11"	6' 11"	9' 4"	9' 4"	10' 10"	10' 10"	14' 0"	14' 0"
16" O.C.	SPF HF	#1 / #2	4' 5"	7' 8"	7' 10"	9' 1"	9' 4"	10' 10"	11' 1"	14' 0"	14' 0"	14' 0"	14' 0"
		#3	4' 4"	7' 4"	7' 4"	9' 1"	9' 1"	10' 10"	10' 10"	14' 0"	14' 0"	14' 0"	14' 0"
		STUD	4' 4"	7' 4"	7' 4"	9' 1"	9' 1"	10' 10"	10' 10"	14' 0"	14' 0"	14' 0"	14' 0"
		STANDARD	4' 4"	6' 4"	6' 4"	8' 4"	8' 4"	10' 10"	10' 10"	12' 11"	12' 11"	14' 0"	14' 0"
	SP DFL	#1	4' 10"	7' 8"	8' 3"	9' 1"	9' 9"	10' 10"	11' 8"	14' 0"	14' 0"	14' 0"	14' 0"
		#2	4' 9"	7' 8"	8' 3"	9' 1"	9' 9"	10' 10"	11' 8"	14' 0"	14' 0"	14' 0"	14' 0"
		#3	4' 6"	7' 7"	7' 7"	9' 1"	9' 6"	10' 10"	11' 4"	14' 0"	14' 0"	14' 0"	14' 0"
		STUD	4' 6"	7' 6"	7' 6"	9' 1"	9' 6"	10' 10"	11' 4"	14' 0"	14' 0"	14' 0"	14' 0"
		STANDARD	4' 5"	6' 5"	6' 5"	8' 6"	8' 6"	10' 10"	11' 1"	13' 3"	13' 3"	14' 0"	14' 0"
12" O.C.	SPF HF	#1 / #2	4' 11"	8' 5"	8' 8"	10' 0"	10' 3"	11' 11"	12' 3"	14' 0"	14' 0"	14' 0"	14' 0"
		#3	4' 9"	8' 5"	8' 5"	10' 0"	10' 0"	11' 11"	11' 11"	14' 0"	14' 0"	14' 0"	14' 0"
		STUD	4' 9"	8' 5"	8' 5"	10' 0"	10' 0"	11' 11"	11' 11"	14' 0"	14' 0"	14' 0"	14' 0"
		STANDARD	4' 9"	7' 3"	7' 3"	9' 7"	9' 7"	11' 11"	11' 11"	14' 0"	14' 0"	14' 0"	14' 0"
	SP DFL	#1	5' 4"	8' 5"	9' 1"	10' 0"	10' 9"	11' 11"	12' 10"	14' 0"	14' 0"	14' 0"	14' 0"
		#2	5' 3"	8' 5"	9' 1"	10' 0"	10' 9"	11' 11"	12' 10"	14' 0"	14' 0"	14' 0"	14' 0"
		#3	5' 0"	8' 5"	8' 5"	10' 0"	10' 6"	11' 11"	12' 6"	14' 0"	14' 0"	14' 0"	14' 0"
		STUD	5' 0"	8' 5"	8' 7"	10' 0"	10' 6"	11' 11"	12' 6"	14' 0"	14' 0"	14' 0"	14' 0"
		STANDARD	4' 11"	7' 5"	7' 5"	9' 10"	9' 10"	11' 11"	12' 3"	14' 0"	14' 0"	14' 0"	14' 0"

BRACING GROUP SPECIES AND GRADES:

GROUP A:

SPRUCE-PINE-FIR

#1 / #2	STANDARD
#3	STUD

HEM-FIR

#2	STUD
#3	STANDARD

DOUGLAS FIR-LARCH

#3
STUD
STANDARD

SOUTHERN PINE

#3
STUD
STANDARD

GROUP B:

HEM-FIR

#1 & BTR
#1

SOUTHERN PINE

#1
#2

DOUGLAS FIR-LARCH

#1
#2

GABLE TRUSS DETAIL NOTES:

LIVE LOAD DEFLECTION CRITERIA IS L/240.

PROVIDE UPLIFT CONNECTIONS FOR 80 PLF OVER CONTINUOUS BEARING (5 PSF TC DEAD LOAD).

GABLE END SUPPORTS LOAD FROM 4' 0" OUTLOOKERS WITH 2' 0" OVERHANG, OR 12" PLYWOOD OVERHANG.

ATTACH EACH "L" BRACE WITH 10d NAILS.

* FOR (1) "L" BRACE: SPACE NAILS AT 2" O.C. IN 18" END ZONES AND 4" O.C. BETWEEN ZONES.

** FOR (2) "L" BRACES: SPACE NAILS AT 3" O.C. IN 18" END ZONES AND 6" O.C. BETWEEN ZONES.

"L" BRACING MUST BE A MINIMUM OF 80% OF WEB MEMBER LENGTH.

DIAGONAL BRACE OPTION: VERTICAL LENGTH MAY BE DOUBLED WHEN DIAGONAL BRACE IS USED. CONNECT DIAGONAL BRACE FOR 600# AT EACH END. MAX WEB TOTAL LENGTH IS 14'.

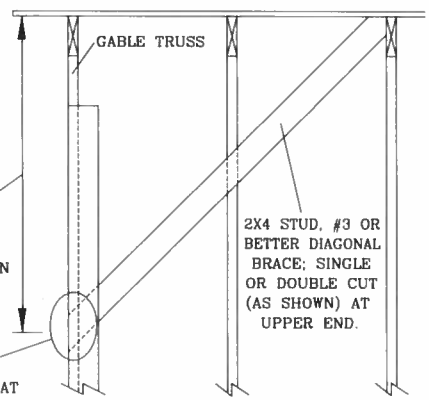

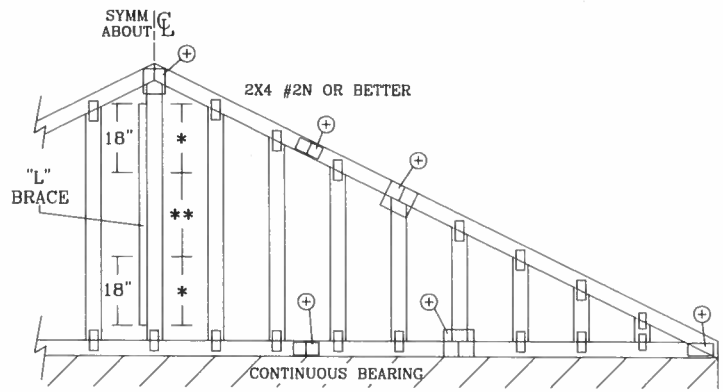

REFER TO CHART ABOVE FOR MAX GABLE VERTICAL LENGTH.

GABLE VERTICAL PLATE SIZES

VERTICAL LENGTH	NO SPLICE
LESS THAN 4' 0"	1X4 OR 2X3
GREATER THAN 4' 0", BUT LESS THAN 11' 6"	2X4
GREATER THAN 11' 6"	2.5X4

\+ REFER TO COMMON TRUSS DESIGN FOR PEAK, SPLICE, AND HEEL PLATES.

ALPINE

ALPINE ENGINEERED PRODUCTS, INC.
POMPANO BEACH, FLORIDA

WARNING TRUSSES REQUIRE EXTREME CARE IN FABRICATING, HANDLING, SHIPPING, INSTALLING AND BRACING. REFER TO BCSI (BUILDING COMPONENT SAFETY INFORMATION), PUBLISHED BY TPI (TRUSS PLATE INSTITUTE, 218 NORTH LEE STR., SUITE 312, ALEXANDRIA, VA. 22314) AND WTCA (WOOD TRUSS COUNCIL OF AMERICA, 6300 ENTERPRISE LN, MADISON, WI 53719) FOR SAFETY PRACTICES PRIOR TO PERFORMING THESE FUNCTIONS. UNLESS OTHERWISE INDICATED, TOP CHORD SHALL HAVE PROPERLY ATTACHED STRUCTURAL PANELS AND BOTTOM CHORD SHALL HAVE A PROPERLY ATTACHED RIGID CEILING.

IMPORTANT FURNISH COPY OF THIS DESIGN TO INSTALLATION CONTRACTOR. ALPINE ENGINEERED PRODUCTS, INC., SHALL NOT BE RESPONSIBLE FOR ANY DEVIATION FROM THIS DESIGN; ANY FAILURE TO BUILD THE TRUSS IN CONFORMANCE WITH TPI; OR FABRICATING, HANDLING, SHIPPING, INSTALLING & BRACING OF TRUSSES. DESIGN CONFORMS WITH APPLICABLE PROVISIONS OF NDS (NATIONAL DESIGN SPEC, BY AF&PA) AND TPI. ALPINE CONNECTOR PLATES ARE MADE OF 20/18/16GA (W,H/SS/K) ASTM A653 GRADE 40/60 (W,K/H,SS) GALV. STEEL. APPLY PLATES TO EACH FACE OF TRUSS AND, UNLESS OTHERWISE LOCATED ON THIS DESIGN, POSITION PER DRAWINGS 160A-Z. ANY INSPECTION OF PLATES FOLLOWED BY (I) SHALL BE PER ANNEX A3 OF TPI 1-2002 SEC. 3. A SEAL ON THIS DRAWING INDICATES ACCEPTANCE OF PROFESSIONAL ENGINEERING RESPONSIBILITY SOLELY FOR THE TRUSS COMPONENT DESIGN SHOWN. THE SUITABILITY AND USE OF THIS COMPONENT FOR ANY BUILDING IS THE RESPONSIBILITY OF THE BUILDING DESIGNER, PER ANSI/TPI 1 SEC. 2.

JAMES E. COLLINS JR. LICENSE No. 52212 STATE OF FLORIDA PROFESSIONAL ENGINEER

MAX. TOT. LD. 60 PSF

MAX. SPACING 24.0"

REF	ASCE7-02-GAB11015
DATE	11/1/06
DRWG	A11015EE1106
-ENG	

GABLE DETAIL
FOR LET-IN VERTICALS

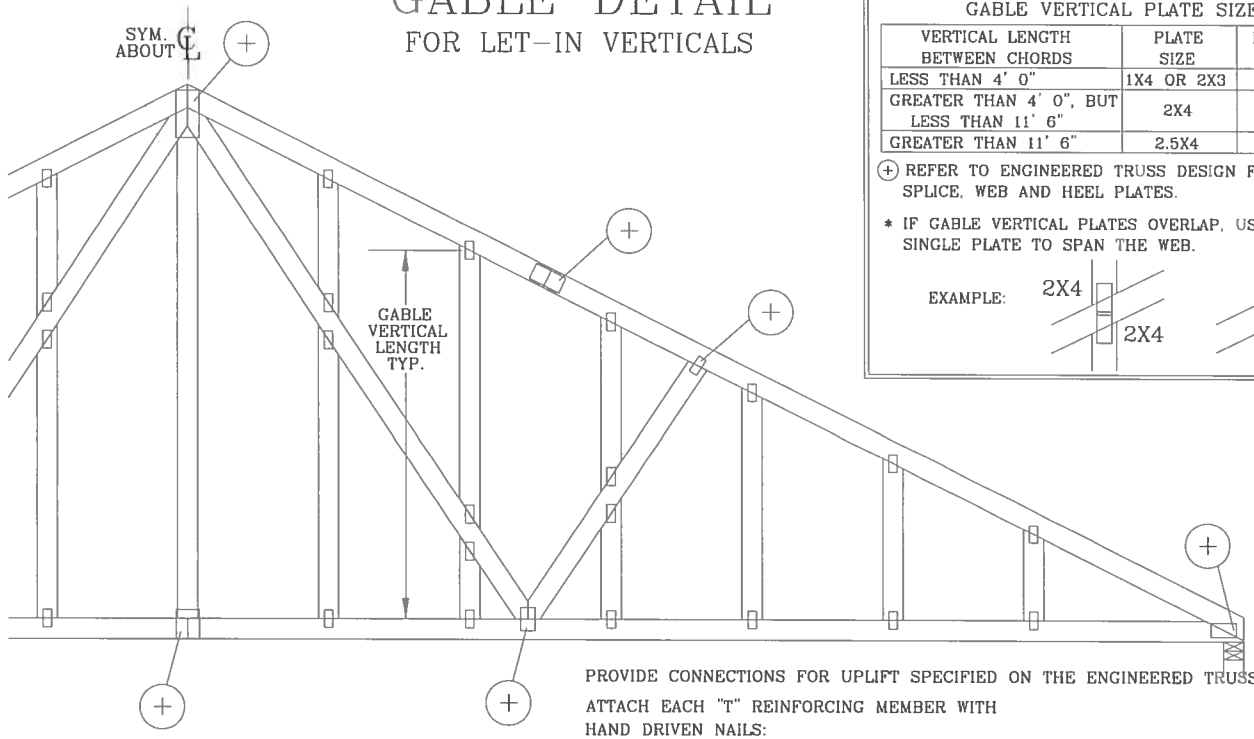

GABLE VERTICAL PLATE SIZES		
VERTICAL LENGTH BETWEEN CHORDS	PLATE SIZE	IF PLATES OVERLAP*
LESS THAN 4' 0"	1X4 OR 2X3	2X8
GREATER THAN 4' 0", BUT LESS THAN 11' 6"	2X4	2X8
GREATER THAN 11' 6"	2.5X4	2.5X8

(+) REFER TO ENGINEERED TRUSS DESIGN FOR PEAK, SPLICE, WEB AND HEEL PLATES.

* IF GABLE VERTICAL PLATES OVERLAP, USE A SINGLE PLATE TO SPAN THE WEB.

EXAMPLE:

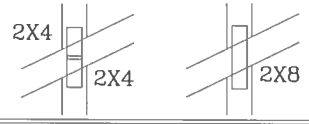

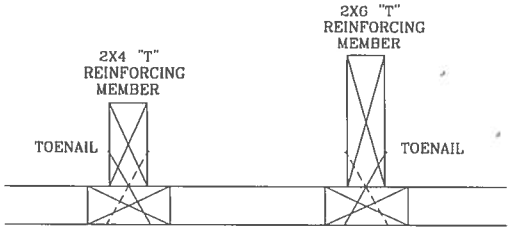

TO CONVERT FROM "L" TO "T" REINFORCING MEMBERS, MULTIPLY "T" FACTOR BY LENGTH (BASED ON GABLE VERTICAL SPECIES, GRADE AND SPACING) FOR (1) 2X4 "L" BRACE, GROUP A, OBTAINED FROM THE APPROPRIATE ALPINE GABLE DETAIL FOR ASCE OR SBCCI WIND LOAD.

MAXIMUM ALLOWABLE "T" REINFORCED GABLE VERTICAL LENGTH IS 14' FROM TOP TO BOTTOM CHORD.

WEB LENGTH INCREASE W/ "T" BRACE

WIND SPEED AND MRH	"T" REINF. MBR. SIZE	SBCCI	ASCE
110 MPH	2x4	10 %	10 %
15 FT	2x6	40 %	50 %
110 MPH	2x4	10 %	10 %
30 FT	2x6	50 %	50 %
100 MPH	2x4	10 %	10 %
15 FT	2x6	30 %	50 %
100 MPH	2x4	10 %	10 %
30 FT	2x6	40 %	40 %
90 MPH	2x4	20 %	10 %
15 FT	2x6	20 %	40 %
90 MPH	2x4	10 %	10 %
30 FT	2x6	30 %	50 %
80 MPH	2x4	10 %	20 %
15 FT	2x6	10 %	30 %
80 MPH	2x4	20 %	10 %
30 FT	2x6	20 %	40 %
70 MPH	2x4	0 %	20 %
15 FT	2x6	0 %	20 %
70 MPH	2x4	10 %	20 %
30 FT	2x6	10 %	30 %

EXAMPLE:
ASCE WIND SPEED = 100 MPH
MEAN ROOF HEIGHT = 30 FT
GABLE VERTICAL = 24" O.C. SP #3
"T" REINFORCING MEMBER SIZE = 2X4
"T" BRACE INCREASE (FROM ABOVE) = 10% = 1.10
(1) 2X4 "L" BRACE LENGTH = 6' 7"
MAXIMUM "T" REINFORCED GABLE VERTICAL LENGTH
1.10 x 6' 7" = 7' 3"

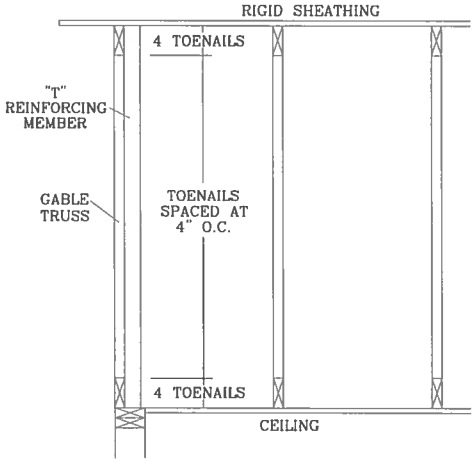

PROVIDE CONNECTIONS FOR UPLIFT SPECIFIED ON THE ENGINEERED TRUSS DESIGN.

ATTACH EACH "T" REINFORCING MEMBER WITH
HAND DRIVEN NAILS:
10d COMMON (0.148"X 3.",MIN) TOENAILS AT 4" O.C. PLUS
(4) 16d COMMON (0.162" X 3.5",MIN) TOENAILS IN TOP AND BOTTOM CHORD.

GUN DRIVEN NAILS:
8d COMMON (0.131"X 2.5",MIN) TOENAILS AT 4" O.C. PLUS
(4) TOENAILS IN TOP AND BOTTOM CHORD.

THIS DETAIL TO BE USED WITH THE APPROPRIATE ALPINE GABLE DETAIL FOR ASCE OR SBCCI WIND LOAD.
ASCE 7-93 GABLE DETAIL DRAWINGS
A11015EN1103, A10015EN1103, A09015EN1103, A08015EN1103, A07015EN1103
A11030EN1103, A10030EN1103, A09030EN1103, A08030EN1103, A07030EN1103
ASCE 7-98 GABLE DETAIL DRAWINGS
A13015EC1103, A12015EC1103, A11015EC1103, A10015EC1103, A08515EC1103
A13030EC1103, A12030EC1103, A11030EC1103, A10030EC1103, A08530EC1103
ASCE 7-02 GABLE DETAIL DRAWINGS
A13015EE0405, A12015EE0405, A11015EE0405, A10015EE0405, A08515EE0405
A13030EE0405, A12030EE0405, A11030EE0405, A10030EE0405, A08530EE0405

SEE APPROPRIATE ALPINE GABLE DETAIL (ASCE OR SBCCI WIND LOAD) FOR MAXIMUM UNREINFORCED GABLE VERTICAL LENGTH.

THIS DRAWING REPLACES DRAWINGS GAB98117 876,719 & HC26294035

ALPINE
ALPINE ENGINEERED PRODUCTS, INC.
POMPANO BEACH, FLORIDA

WARNING TRUSSES REQUIRE EXTREME CARE IN FABRICATING, HANDLING, SHIPPING, INSTALLING AND BRACING. REFER TO BCSI (BUILDING COMPONENT SAFETY INFORMATION), PUBLISHED BY TPI (TRUSS PLATE INSTITUTE, 218 NORTH LEE STR., SUITE 312, ALEXANDRIA, VA. 22314) AND WTCA (WOOD TRUSS COUNCIL OF AMERICA, 6300 ENTERPRISE LN, MADISON, WI 53719) FOR SAFETY PRACTICES PRIOR TO PERFORMING THESE FUNCTIONS. UNLESS OTHERWISE INDICATED, TOP CHORD SHALL HAVE PROPERLY ATTACHED STRUCTURAL PANELS AND BOTTOM CHORD SHALL HAVE A PROPERLY ATTACHED RIGID CEILING.

IMPORTANT FURNISH COPY OF THIS DESIGN TO INSTALLATION CONTRACTOR. ALPINE ENGINEERED PRODUCTS, INC., SHALL NOT BE RESPONSIBLE FOR ANY DEVIATION FROM THIS DESIGN; ANY FAILURE TO BUILD THE TRUSS IN CONFORMANCE WITH TPI; OR FABRICATING, HANDLING, SHIPPING, INSTALLING & BRACING OF TRUSSES. DESIGN CONFORMS WITH APPLICABLE PROVISIONS OF NDS (NATIONAL DESIGN SPEC BY AF&PA) AND TPI. ALPINE CONNECTOR PLATES ARE MADE OF 20/18/16GA (W,H/SS/K) ASTM A653 GRADE 40/60 (W,K/H,SS) GALV. STEEL. APPLY PLATES TO EACH FACE OF TRUSS AND, UNLESS OTHERWISE LOCATED ON THIS DESIGN, POSITION PER DRAWINGS 160A-Z. ANY INSPECTION OF PLATES FOLLOWED BY (I) SHALL BE PER ANNEX A3 OF TPI 1-2002 SEC. 3. A SEAL ON THIS DRAWING INDICATES ACCEPTANCE OF PROFESSIONAL ENGINEERING RESPONSIBILITY SOLELY FOR THE TRUSS COMPONENT DESIGN SHOWN. THE SUITABILITY AND USE OF THIS COMPONENT FOR ANY BUILDING IS THE RESPONSIBILITY OF THE BUILDING DESIGNER, PER ANSI/TPI 1 SEC. 2.

JAMES F. COLLINS JR. LICENSE No. 52212 STATE OF FLORIDA PROFESSIONAL ENGINEER

MAX TOT. LD.	60 PSF
DUR. FAC.	ANY
MAX SPACING	24.0"

REF	LET-IN VERT
DATE	11/1/06
DRWG	GBLLETIN1106
-ENG	DLJ/KAR

CLB WEB BRACE SUBSTITUTION

THIS DETAIL IS TO BE USED WHEN CONTINUOUS LATERAL BRACING (CLB) IS SPECIFIED ON AN ALPINE TRUSS DESIGN BUT AN ALTERNATIVE WEB BRACING METHOD IS DESIRED.

NOTES:

THIS DETAIL IS ONLY APPLICABLE FOR CHANGING THE SPECIFIED CLB SHOWN ON SINGLE PLY SEALED DESIGNS TO T-BRACING OR SCAB BRACING.

ALTERNATIVE BRACING SPECIFIED IN CHART BELOW MAY BE CONSERVATIVE. FOR MINIMUM ALTERNATIVE BRACING, RE-RUN DESIGN WITH APPROPRIATE BRACING.

WEB MEMBER SIZE	SPECIFIED CLB BRACING	ALTERNATIVE BRACING T OR L-BRACE	ALTERNATIVE BRACING SCAB BRACE
2X3 OR 2X4	1 ROW	2X4	1-2X4
2X3 OR 2X4	2 ROWS	2X6	2-2X4
2X6	1 ROW	2X4	1-2X6
2X6	2 ROWS	2X6	2-2X4(*)
2X8	1 ROW	2X6	1-2X8
2X8	2 ROWS	2X6	2-2X6(*)

T-BRACE, L-BRACE AND SCAB BRACE TO BE SAME SPECIES AND GRADE OR BETTER THAN WEB MEMBER UNLESS SPECIFIED OTHERWISE ON ENGINEER'S SEALED DESIGN.

(*) CENTER SCAB ON WIDE FACE OF WEB. APPLY (1) SCAB TO EACH FACE OF WEB.

T-BRACING OR L-BRACING:

APPLY TO EITHER SIDE OF WEB NARROW FACE.
ATTACH WITH 10d BOX OR GUN
(0.128"x 3.",MIN) NAILS.
AT 6" O.C. BRACE IS A
MINIMUM 80% OF WEB
MEMBER LENGTH

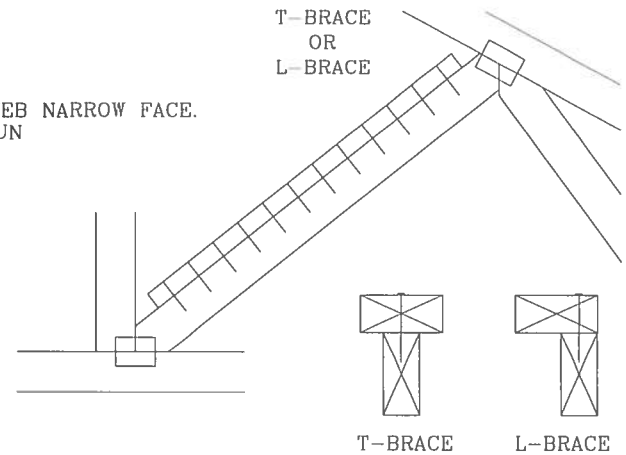

SCAB BRACING:

APPLY SCAB(S) TO WIDE FACE OF WEB.
NO MORE THAN (1) SCAB PER FACE.
ATTACH WITH 10d BOX OR GUN
(0.128"x 3.",MIN) NAILS.
AT 6" O.C. BRACE IS A MINIMUM
80% OF WEB MEMBER LENGTH

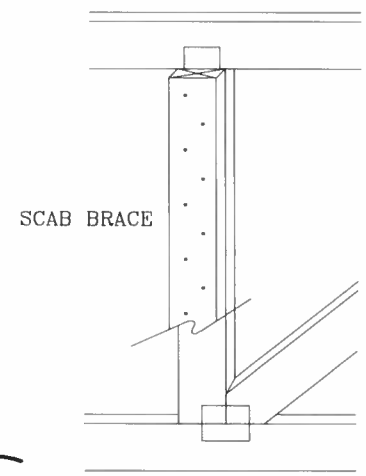

THIS DRAWING REPLACES DRAWING 579,640

ALPINE

ALPINE ENGINEERED PRODUCTS, INC.
POMPANO BEACH, FLORIDA

WARNING TRUSSES REQUIRE EXTREME CARE IN FABRICATING, HANDLING, SHIPPING, INSTALLING AND BRACING. REFER TO BCSI (BUILDING COMPONENT SAFETY INFORMATION), PUBLISHED BY TPI (TRUSS PLATE INSTITUTE, 218 NORTH LEE STR., SUITE 312, ALEXANDRIA, VA. 22314) AND WTCA (WOOD TRUSS COUNCIL OF AMERICA, 6300 ENTERPRISE LN, MADISON, WI 53719) FOR SAFETY PRACTICES PRIOR TO PERFORMING THESE FUNCTIONS. UNLESS OTHERWISE INDICATED, TOP CHORD SHALL HAVE PROPERLY ATTACHED STRUCTURAL PANELS AND BOTTOM CHORD SHALL HAVE A PROPERLY ATTACHED RIGID CEILING.

IMPORTANT FURNISH COPY OF THIS DESIGN TO INSTALLATION CONTRACTOR. ALPINE ENGINEERED PRODUCTS, INC., SHALL NOT BE RESPONSIBLE FOR ANY DEVIATION FROM THIS DESIGN; ANY FAILURE TO BUILD THE TRUSS IN CONFORMANCE WITH TPI; OR FABRICATING, HANDLING, SHIPPING, INSTALLING & BRACING OF TRUSSES. DESIGN CONFORMS WITH APPLICABLE PROVISIONS OF NDS (NATIONAL DESIGN SPEC. BY AF&PA) AND TPI. ALPINE CONNECTOR PLATES ARE MADE OF 20/18/16GA (W,H/SS/K) ASTM A653 GRADE 40/60 (W,K/H,SS) GALV. STEEL. APPLY PLATES TO EACH FACE OF TRUSS AND, UNLESS OTHERWISE LOCATED ON THIS DESIGN, POSITION PER DRAWINGS 160A-Z. ANY INSPECTION OF PLATES FOLLOWED BY (I) SHALL BE PER ANNEX A3 OF TPI 1-2002 SEC. 3. A SEAL ON THIS DRAWING INDICATES ACCEPTANCE OF PROFESSIONAL ENGINEERING RESPONSIBILITY SOLELY FOR THE TRUSS COMPONENT DESIGN SHOWN. THE SUITABILITY AND USE OF THIS COMPONENT FOR ANY BUILDING IS THE RESPONSIBILITY OF THE BUILDING DESIGNER, PER ANSI/TPI 1 SEC. 2.

JAMES F. COLLINS, JR. LICENSE No. 52212 STATE OF FLORIDA PROFESSIONAL ENGINEER

TC LL	PSF	REF	CLB SUBST.
TC DL	PSF	DATE	11/1/06
BC DL	PSF	DRWG	BRCLBSUB1106
BC LL	PSF	-ENG	MLH/KAR
TOT. LD.	PSF		
DUR. FAC.			
SPACING			

BEARING BLOCK NAIL SPACING DETAIL

MINIMUM SPACING FOR SINGLE BEARING BLOCK IS SHOWN. DOUBLE NAIL SPACINGS AND STAGGER NAILING FOR TWO BLOCKS. GREATER SPACING MAY BE REQUIRED TO AVOID SPLITTING.

A – EDGE DISTANCE AND SPACING BETWEEN STAGGERED ROWS OF NAILS (6 NAIL DIAMETERS)
B – SPACING OF NAILS IN A ROW (12 NAIL DIAMETERS)
C – END DISTANCE (15 NAIL DIAMETERS)

IF NAIL HOLES ARE PREBORED, SOME SPACING MAY BE REDUCED BY THE AMOUNTS GIVEN BELOW:
- • SPACING MAY BE REDUCED BY 50%
- •• SPACING MAY BE REDUCED BY 33%

BEARING BLOCK TO BE SAME SIZE AND SPECIES AS BOTTOM CHORD. BLOCKS MAY BE ANY GRADE WITHIN THE SPECIES, PROVIDED THE COMPRESSION PERPENDICULAR TO GRAIN VALUE (Fc–perp) IS AT LEAST THAT OF THE CHORD.

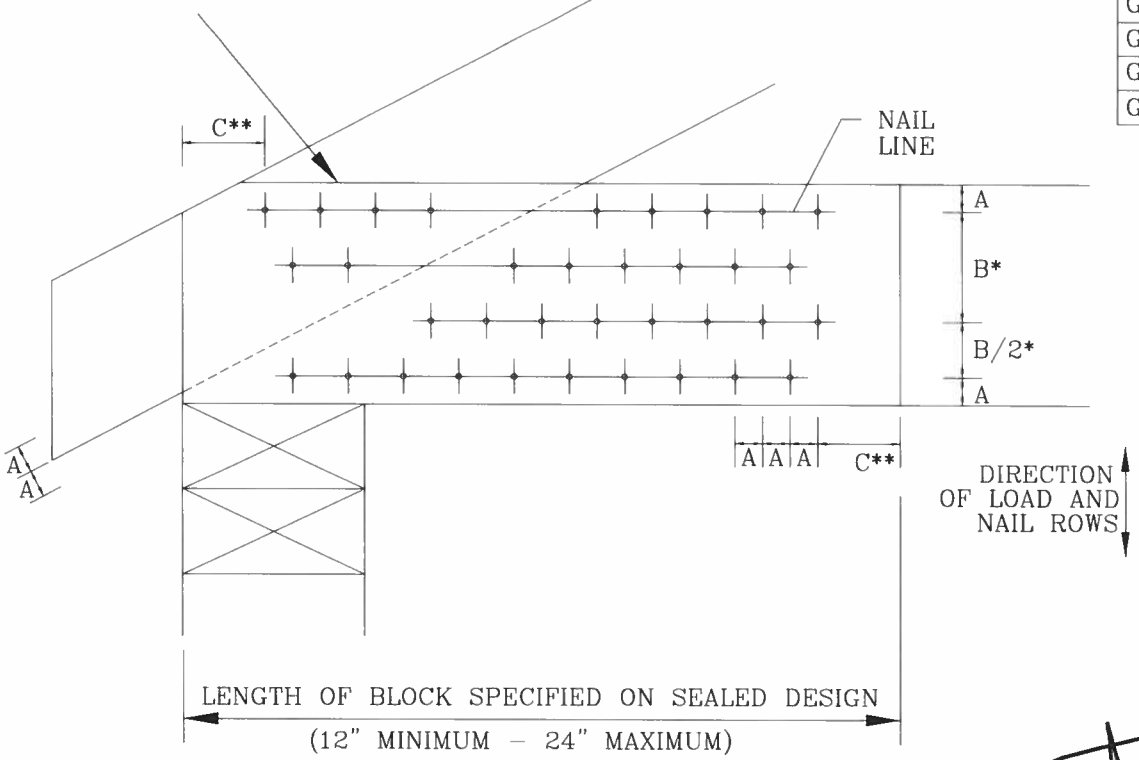

MAXIMUM NUMBER OF NAIL LINES PARALLEL TO GRAIN

NAIL TYPE	CHORD SIZE 2X4	2X6	2X8	2X10	2X12
8d BOX (0.113"X 2.5",MIN)	3	6	9	12	15
10d BOX (0.128"X 3.",MIN)	3	5	7	10	12
12d BOX (0.128"X 3.25",MIN)	3	5	7	10	12
16d BOX (0.135"X 3.5",MIN)	3	5	7	10	12
20d BOX (0.148"X 4.",MIN)	2	4	5	6	8
8d COMMON (0.131"X 2.5",MIN)	3	5	7	10	12
10d COMMON (0.148"X 3.",MIN)	2	4	6	8	10
12d COMMON (0.148"X 3.25",MIN)	2	4	6	8	10
16d COMMON (0.162"X 3.5",MIN)	2	4	6	8	10
GUN (0.120"X 2.5",MIN)	3	6	8	11	14
GUN (0.131"X 2.5",MIN)	3	5	7	10	12
GUN (0.120"X 3.",MIN)	3	6	8	11	14
GUN (0.131"X 3.",MIN)	3	5	7	10	12

MINIMUM NAIL SPACING DISTANCES

NAIL TYPE	DISTANCES A	B*	C**
8d BOX (0.113"X 2.5",MIN)	3/4"	1 3/8"	1 3/4"
10d BOX (0.128"X 3.",MIN)	7/8"	1 5/8"	2"
12d BOX (0.128"X 3.25",MIN)	7/8"	1 5/8"	2"
16d BOX (0.135"X 3.5",MIN)	7/8"	1 5/8"	2 1/8"
20d BOX (0.148"X 4.",MIN)	1"	1 7/8"	2 1/4"
8d COMMON (0.131"X 2.5",MIN)	7/8"	1 5/8"	2"
10d COMMON (0.148"X 3.",MIN)	1"	1 7/8"	2 1/4"
12d COMMON (0.148"X 3.25",MIN)	1"	1 7/8"	2 1/4"
16d COMMON (0.162"X 3.5",MIN)	1'	2"	2 1/2"
GUN (0.120"X 2.5",MIN)	3/4"	1 1/2"	1 7/8"
GUN (0.131"X 2.5",MIN)	7/8"	1 5/8"	2"
GUN (0.120"X 3.",MIN)	3/4"	1 1/2"	1 7/8"
GUN (0.131"X 3.",MIN)	7/8"	1 5/8"	2"

THIS DRAWING REPLACES DRAWING B139 AND CNBRGBLK0699

ALPINE

ALPINE ENGINEERED PRODUCTS, INC.
POMPANO BEACH, FLORIDA

WARNING TRUSSES REQUIRE EXTREME CARE IN FABRICATING, HANDLING, SHIPPING, INSTALLING AND BRACING. REFER TO BCSI (BUILDING COMPONENT SAFETY INFORMATION), PUBLISHED BY TPI (TRUSS PLATE INSTITUTE, 218 NORTH LEE STR., SUITE 312 ALEXANDRIA, VA. 22314) AND WTCA (WOOD TRUSS COUNCIL OF AMERICA, 6300 ENTERPRISE LN, MADISON, WI 53719) FOR SAFETY PRACTICES PRIOR TO PERFORMING THESE FUNCTIONS. UNLESS OTHERWISE INDICATED, TOP CHORD SHALL HAVE PROPERLY ATTACHED STRUCTURAL PANELS AND BOTTOM CHORD SHALL HAVE A PROPERLY ATTACHED RIGID CEILING.

IMPORTANT FURNISH COPY OF THIS DESIGN TO INSTALLATION CONTRACTOR. ALPINE ENGINEERED PRODUCTS, INC., SHALL NOT BE RESPONSIBLE FOR ANY DEVIATION FROM THIS DESIGN; ANY FAILURE TO BUILD THE TRUSS IN CONFORMANCE WITH TPI; OR FABRICATING, HANDLING, SHIPPING, INSTALLING & BRACING OF TRUSSES. DESIGN CONFORMS WITH APPLICABLE PROVISIONS OF NDS (NATIONAL DESIGN SPEC BY AF&PA) AND TPI. ALPINE CONNECTOR PLATES ARE MADE OF 20/18/16GA (W,H/SS/K) ASTM A653 GRADE 40/60 (W,K/H,SS) GALV. STEEL. APPLY PLATES TO EACH FACE OF TRUSS AND, UNLESS OTHERWISE LOCATED ON THIS DESIGN, POSITION PER DRAWINGS 160A-Z. ANY INSPECTION OF PLATES FOLLOWED BY (I) SHALL BE PER ANNEX A3 OF TPI 1-2002 SEC. 3. A SEAL ON THIS DRAWING INDICATES ACCEPTANCE OF PROFESSIONAL ENGINEERING RESPONSIBILITY SOLELY FOR THE TRUSS COMPONENT DESIGN SHOWN. THE SUITABILITY AND USE OF THIS COMPONENT FOR ANY BUILDING IS THE RESPONSIBILITY OF THE BUILDING DESIGNER, PER ANSI/TPI 1 SEC. 2.

JAMES F. COLVINS, JR. LICENSE No. 52212 STATE OF FLORIDA PROFESSIONAL ENGINEER

REF	BEARING BLOCK
DATE	11/1/06
DRWG	CNBRGBLK1106
–ENG	SJP/KAR

ASCE 7-02: 110 MPH WIND SPEED, 30' MEAN HEIGHT, ENCLOSED, I = 1.00, EXPOSURE C

MAX GABLE VERTICAL LENGTH

2X4 GABLE VERTICAL SPACING	SPECIES	BRACE GRADE	NO BRACES	(1) 1X4 "L" BRACE * GROUP A	(1) 1X4 "L" BRACE * GROUP B	(1) 2X4 "L" BRACE * GROUP A	(1) 2X4 "L" BRACE * GROUP B	(2) 2X4 "L" BRACE ** GROUP A	(2) 2X4 "L" BRACE ** GROUP B	(1) 2X6 "L" BRACE * GROUP A	(1) 2X6 "L" BRACE * GROUP B	(2) 2X6 "L" BRACE ** GROUP A	(2) 2X6 "L" BRACE ** GROUP B
24" O.C.	SPF HF	#1 / #2	3' 8"	6' 4"	6' 6"	7' 6"	7' 8"	8' 11"	9' 2"	11' 9"	12' 1"	14' 0"	14' 0"
		#3	3' 7"	5' 5"	5' 5"	7' 2"	7' 2"	8' 11"	8' 11"	11' 2"	11' 2"	14' 0"	14' 0"
		STUD	3' 7"	5' 5"	5' 5"	7' 1"	7' 1"	8' 11"	8' 11"	11' 1"	11' 1"	14' 0"	14' 0"
		STANDARD	3' 7"	4' 8"	4' 8"	6' 1"	6' 1"	8' 3"	8' 3"	9' 6"	9' 6"	12' 11"	12' 11"
	SP DFL	#1	4' 0"	6' 4"	6' 10"	7' 6"	8' 1"	8' 11"	9' 7"	11' 9"	12' 8"	14' 0"	14' 0"
		#2	3' 11"	6' 4"	6' 10"	7' 6"	8' 1"	8' 11"	9' 7"	11' 9"	12' 8"	14' 0"	14' 0"
		#3	3' 9"	5' 7"	5' 7"	7' 4"	7' 4"	8' 11"	9' 5"	11' 5"	11' 5"	14' 0"	14' 0"
		STUD	3' 9"	5' 6"	5' 6"	7' 3"	7' 3"	8' 11"	9' 5"	11' 4"	11' 4"	14' 0"	14' 0"
		STANDARD	3' 8"	4' 9"	4' 9"	6' 3"	6' 3"	8' 5"	8' 5"	9' 9"	9' 9"	13' 3"	14' 0"
16" O.C.	SPF HF	#1 / #2	4' 2"	7' 3"	7' 5"	8' 7"	8' 10"	10' 3"	10' 6"	13' 5"	13' 10"	14' 0"	14' 0"
		#3	4' 1"	6' 8"	6' 8"	8' 7"	8' 7"	10' 3"	10' 3"	13' 5"	13' 5"	14' 0"	14' 0"
		STUD	4' 1"	8' 0"	8' 0"	8' 7"	8' 7"	10' 3"	10' 3"	13' 5"	13' 5"	14' 0"	14' 0"
		STANDARD	4' 1"	5' 8"	5' 8"	7' 6"	7' 6"	10' 1"	10' 1"	11' 8"	11' 8"	14' 0"	14' 0"
	SP DFL	#1	4' 7"	7' 3"	7' 9"	8' 7"	9' 3"	10' 3"	11' 0"	13' 5"	14' 0"	14' 0"	14' 0"
		#2	4' 6"	7' 3"	7' 9"	8' 7"	9' 3"	10' 3"	11' 0"	13' 5"	14' 0"	14' 0"	14' 0"
		#3	4' 4"	6' 10"	6' 10"	8' 7"	9' 0"	10' 3"	10' 9"	13' 5"	14' 0"	14' 0"	14' 0"
		STUD	4' 4"	6' 9"	6' 9"	8' 7"	8' 11"	10' 3"	10' 9"	13' 5"	14' 0"	14' 0"	14' 0"
		STANDARD	4' 2"	5' 10"	5' 10"	7' 8"	7' 8"	10' 3"	10' 4"	11' 11"	11' 11"	14' 0"	14' 0"
12" O.C.	SPF HF	#1 / #2	4' 7"	8' 0"	8' 2"	9' 5"	9' 8"	11' 3"	11' 7"	14' 0"	14' 0"	14' 0"	14' 0"
		#3	4' 6"	7' 8"	7' 8"	9' 5"	9' 5"	11' 3"	11' 3"	14' 0"	14' 0"	14' 0"	14' 0"
		STUD	4' 6"	7' 8"	7' 8"	9' 5"	9' 5"	11' 3"	11' 3"	14' 0"	14' 0"	14' 0"	14' 0"
		STANDARD	4' 6"	6' 7"	6' 7"	8' 8"	8' 8"	11' 3"	11' 3"	13' 6"	13' 6"	14' 0"	14' 0"
	SP DFL	#1	5' 1"	8' 0"	8' 7"	9' 5"	10' 2"	11' 3"	12' 1"	14' 0"	14' 0"	14' 0"	14' 0"
		#2	4' 11"	8' 0"	8' 7"	9' 5"	10' 2"	11' 3"	12' 1"	14' 0"	14' 0"	14' 0"	14' 0"
		#3	4' 9"	7' 11"	7' 11"	9' 5"	9' 11"	11' 3"	11' 10"	14' 0"	14' 0"	14' 0"	14' 0"
		STUD	4' 9"	7' 9"	7' 9"	9' 5"	9' 11"	11' 3"	11' 10"	14' 0"	14' 0"	14' 0"	14' 0"
		STANDARD	4' 7"	6' 9"	6' 9"	8' 10"	8' 10"	11' 3"	11' 7"	13' 10"	13' 10"	14' 0"	14' 0"

BRACING GROUP SPECIES AND GRADES:

GROUP A:

SPRUCE-PINE-FIR

#1 / #2	STANDARD
#3	STUD

HEM-FIR

#2	STUD
#3	STANDARD

DOUGLAS FIR-LARCH

#3
STUD
STANDARD

SOUTHERN PINE

#3
STUD
STANDARD

GROUP B:

HEM-FIR

#1 & BTR
#1

SOUTHERN PINE

#1
#2

DOUGLAS FIR-LARCH

#1
#2

GABLE TRUSS DETAIL NOTES:

LIVE LOAD DEFLECTION CRITERIA IS L/240.

PROVIDE UPLIFT CONNECTIONS FOR 100 PLF OVER CONTINUOUS BEARING (5 PSF TC DEAD LOAD).

GABLE END SUPPORTS LOAD FROM 4' 0" OUTLOOKERS WITH 2' 0" OVERHANG, OR 12" PLYWOOD OVERHANG.

ATTACH EACH "L" BRACE WITH 10d NAILS.
* FOR (1) "L" BRACE: SPACE NAILS AT 2" O.C. IN 18" END ZONES AND 4" O.C. BETWEEN ZONES.
** FOR (2) "L" BRACES: SPACE NAILS AT 3" O.C. IN 18" END ZONES AND 6" O.C. BETWEEN ZONES.

"L" BRACING MUST BE A MINIMUM OF 80% OF WEB MEMBER LENGTH.

DIAGONAL BRACE OPTION: VERTICAL LENGTH MAY BE DOUBLED WHEN DIAGONAL BRACE IS USED. CONNECT DIAGONAL BRACE FOR 700# AT EACH END. MAX WEB TOTAL LENGTH IS 14'.

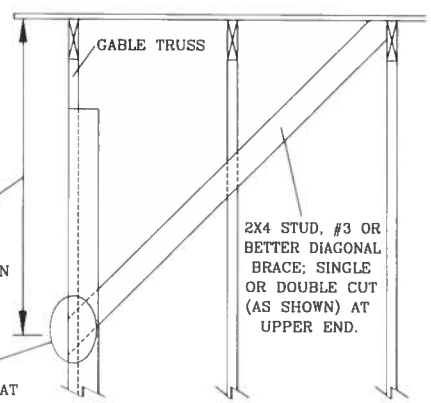

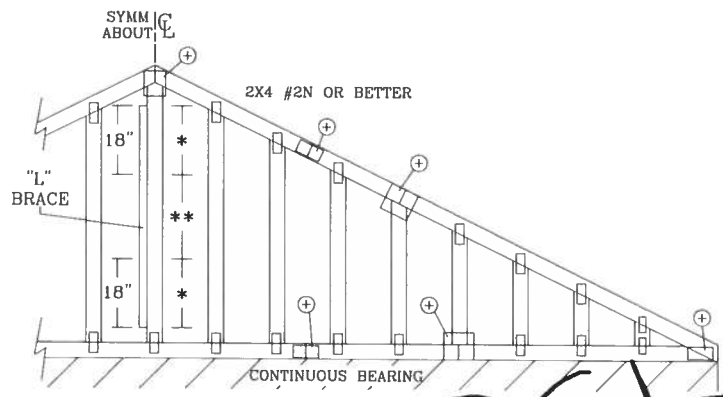

REFER TO CHART ABOVE FOR MAX GABLE VERTICAL LENGTH.

GABLE VERTICAL PLATE SIZES

VERTICAL LENGTH	NO SPLICE
LESS THAN 4' 0"	1X4 OR 2X3
GREATER THAN 4' 0", BUT LESS THAN 11' 6"	2X4
GREATER THAN 11' 6"	2.5X4

\+ REFER TO COMMON TRUSS DESIGN FOR PEAK, SPLICE, AND HEEL PLATES.

ALPINE

ALPINE ENGINEERED PRODUCTS, INC.
POMPANO BEACH, FLORIDA

WARNING TRUSSES REQUIRE EXTREME CARE IN FABRICATING, HANDLING, SHIPPING, INSTALLING AND BRACING. REFER TO BCSI (BUILDING COMPONENT SAFETY INFORMATION), PUBLISHED BY TPI (TRUSS PLATE INSTITUTE, 218 NORTH LEE STR., SUITE 312, ALEXANDRIA, VA. 22314) AND WTCA (WOOD TRUSS COUNCIL OF AMERICA, 6300 ENTERPRISE LN, MADISON, WI 53719) FOR SAFETY PRACTICES PRIOR TO PERFORMING THESE FUNCTIONS. UNLESS OTHERWISE INDICATED, TOP CHORD SHALL HAVE PROPERLY ATTACHED STRUCTURAL PANELS AND BOTTOM CHORD SHALL HAVE A PROPERLY ATTACHED RIGID CEILING.

IMPORTANT FURNISH COPY OF THIS DESIGN TO INSTALLATION CONTRACTOR. ALPINE ENGINEERED PRODUCTS, INC., SHALL NOT BE RESPONSIBLE FOR ANY DEVIATION FROM THIS DESIGN; ANY FAILURE TO BUILD THE TRUSS IN CONFORMANCE WITH TPI; OR FABRICATING, HANDLING, SHIPPING, INSTALLING & BRACING OF TRUSSES. DESIGN CONFORMS WITH APPLICABLE PROVISIONS OF NDS (NATIONAL DESIGN SPEC. BY AF&PA) AND TPI. ALPINE CONNECTOR PLATES ARE MADE OF 20/18/16GA (W,H/SS/K) ASTM A653 GRADE 40/60 (W,K/H,SS) GALV. STEEL. APPLY PLATES TO EACH FACE OF TRUSS AND, UNLESS OTHERWISE LOCATED ON THIS DESIGN, POSITION PER DRAWINGS 160A-Z. ANY INSPECTION OF PLATES FOLLOWED BY (1) SHALL BE PER ANNEX A3 OF TPI 1-2002 SEC. 3. A SEAL ON THIS DRAWING INDICATES ACCEPTANCE OF PROFESSIONAL ENGINEERING RESPONSIBILITY SOLELY FOR THE TRUSS COMPONENT DESIGN SHOWN. THE SUITABILITY AND USE OF THIS COMPONENT FOR ANY BUILDING IS THE RESPONSIBILITY OF THE BUILDING DESIGNER, PER ANSI/TPI 1 SEC. 2.

JAMES F. COLLINS, JR. LICENSE No. 52212 STATE OF FLORIDA PROFESSIONAL ENGINEER

MAX. TOT. LD. 60 PSF

MAX. SPACING 24.0"

REF	ASCE7-02-GAB11030
DATE	11/1/06
DRWG	A11030EE1106
-ENG	

Inswing

BUILDING CODE COMPLIANCE OFFICE (BCCO)
PRODUCT CONTROL DIVISION

MIAMI-DADE COUNTY, FLORIDA
METRO-DADE FLAGLER BUILDING
140 WEST FLAGLER STREET, SUITE 1603
MIAMI, FLORIDA 33130-1563
(305) 375-2901 FAX (305) 375-2908

NOTICE OF ACCEPTANCE (NOA)

Therma-Tru Corporation
1687 Woodlands Drive
Maumee, Ohio 43537

SCOPE:
This NOA is being issued under the applicable rules and regulations governing the use of construction materials. The documentation submitted has been reviewed by Miami-Dade County Product Control Division and accepted by the Board of Rules and Appeals (BORA) to be used in Miami Dade County and other areas where allowed by the Authority Having Jurisdiction (AHJ).

This NOA shall not be valid after the expiration date stated below. The Miami-Dade County Product Control Division (In Miami Dade County) and/or the AHJ (in areas other than Miami Dade County) reserve the right to have this product or material tested for quality assurance purposes. If this product or material fails to perform in the accepted manner, the manufacturer will incur the expense of such testing and the AHJ may immediately revoke, modify, or suspend the use of such product or material within their jurisdiction. BORA reserves the right to revoke this acceptance, if it is determined by Miami-Dade County Product Control Division that this product or material fails to meet the requirements of the applicable building code.

This product is approved as described herein, and has been designed to comply with the High Velocity Hurricane Zone of the Florida Building Code.

DESCRIPTION: "Classic Craft" Opaque Fiberglass Door 8'0 Inswing

APPROVAL DOCUMENT: Drawing No. S-2179, titled "Classic Craft Opaque" Single & Double Inswing 8'0 Fiberglass Door", sheets 1 through 7, prepared by RW Building Consultants, Inc., dated 3/18/02, bearing the Miami-Dade County Product Control Approval stamp with the Notice of Acceptance number and approval date by the Miami-Dade County Product Control Division.

MISSILE IMPACT RATING: None

LABELING: Each unit shall bear a permanent label with the manufacturer's name or logo, city, state and following statement: "Miami-Dade County Product Control Approved", unless otherwise noted herein.

RENEWAL of this NOA shall be considered after a renewal application has been filed and there has been no change in the applicable building code negatively affecting the performance of this product.

TERMINATION of this NOA will occur after the expiration date or if there has been a revision or change in the materials, use, and/or manufacture of the product or process. Misuse of this NOA as an endorsement of any product, for sales, advertising or any other purposes shall automatically terminate this NOA. Failure to comply with any section of this NOA shall be cause for termination and removal of NOA.

ADVERTISEMENT: The NOA number preceded by the words Miami-Dade County, Florida, and followed by the expiration date may be displayed in advertising literature. If any portion of the NOA is displayed, then it shall be done in its entirety.

INSPECTION: A copy of this entire NOA shall be provided to the user by the manufacturer or its distributors and shall be available for inspection at the job site at the request of the Building Official.

The submitted documentation was reviewed by **Raul Rodriguez**

ET THE SOUTH FLORIDA
MIAMI–DADE COUNTY.
E ANCHORED PROPERLY
CTURE.
JSTED AND SPACED AS
DMENT TO BASE MATERIAL
OR STUCCO.
ABLE PAGE 1.
E WATER REQUIREMENTS

ISTANT SHUTTERS ARE REQUIRED.
BE USED IN A

LOCATIONS PROTECTED BY
THE ANGLE BETWEEN THE EDGE
IS LESS THAN 45 DEGREES.
–HABITABLE AREAS WHERE THE
) TO ACCEPT WATER INFILTRATION.

RGLASS DOOR
onditions)

um thickness, with yield strength

1.9 lbs. density by BASF.
tructed from a sheet molding
thk. is filled with 1.9 lbs. density
heets are glued to the wood stiles
VL or LSL. The latch stile which is
The top and bottom rail are of a
or application the inactive door
gal of 6060–T6 alloy.
ted from finger jointed pine. The
3) #8 x 2 1/2" long screw at each
a sidelite application using
s per each mullion. The units uses
5" x 1.548".
ndwich glazed using a two piece lip
d on the exterior with an 1/8"
with Dow 795 silicone compond
e to the sidelite panel & to the
ith a #8 x 1 1/2" long Plascrew

CONTENTS
RIPTION
GENERAL NOTES

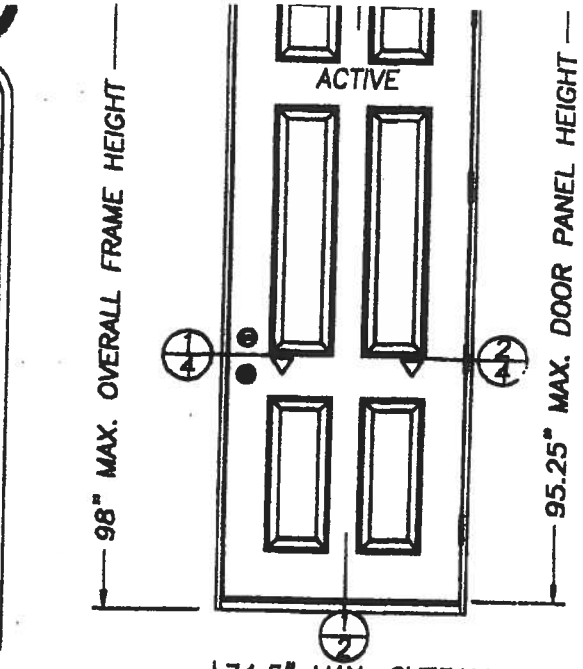

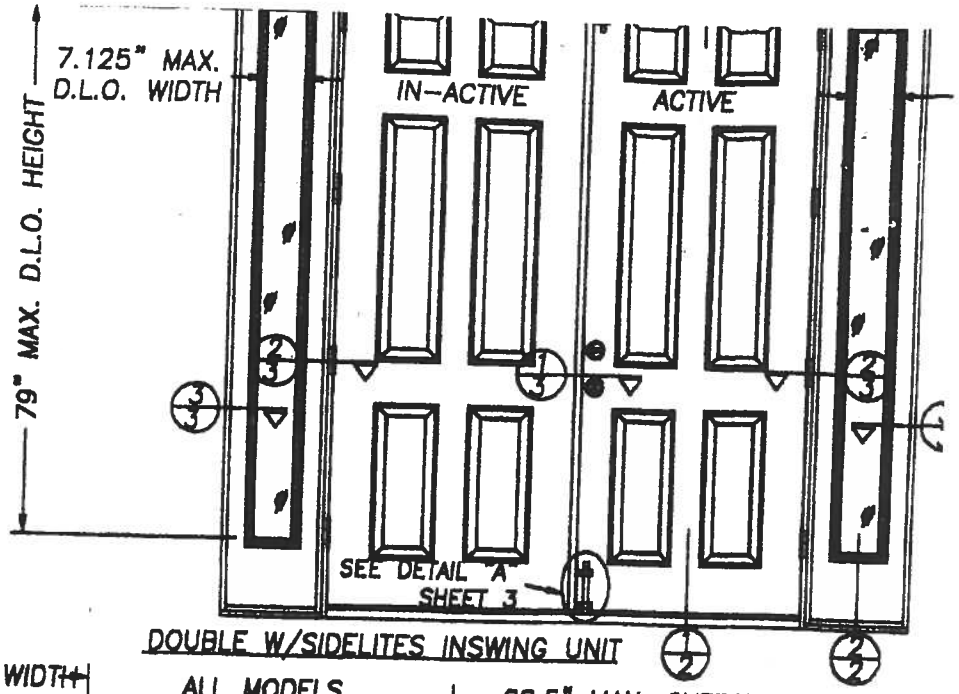

ALL MODELS
ARE VIEWED
FROM INTERIOR

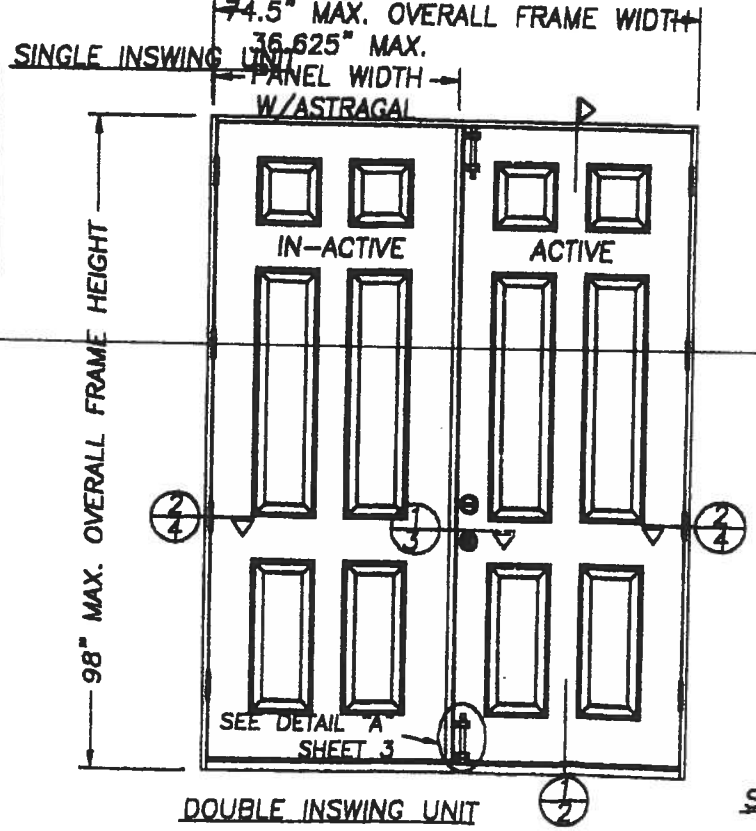

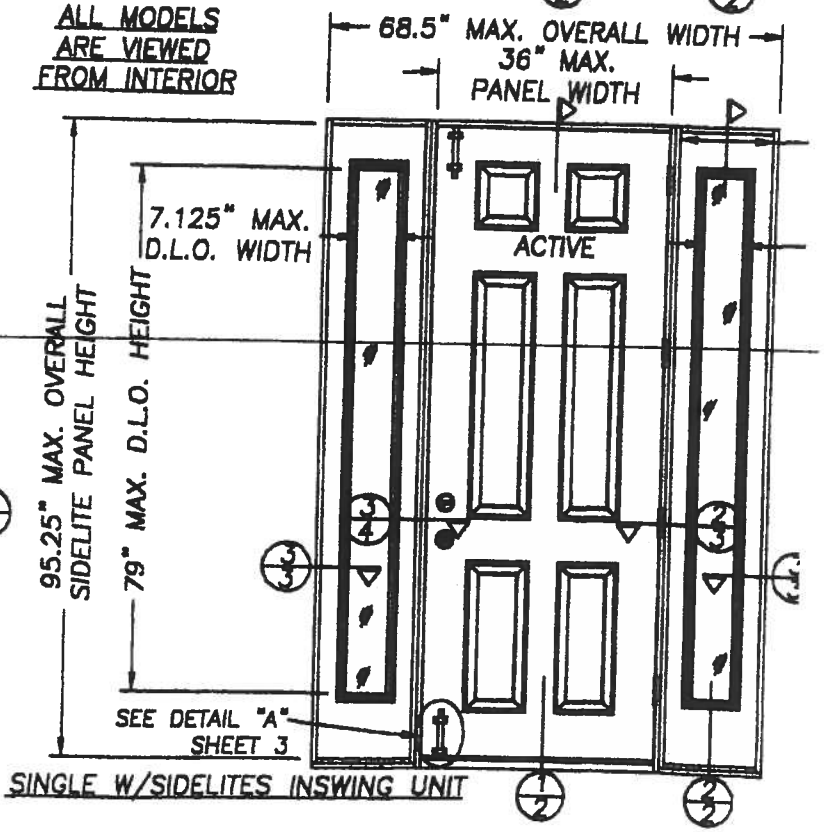

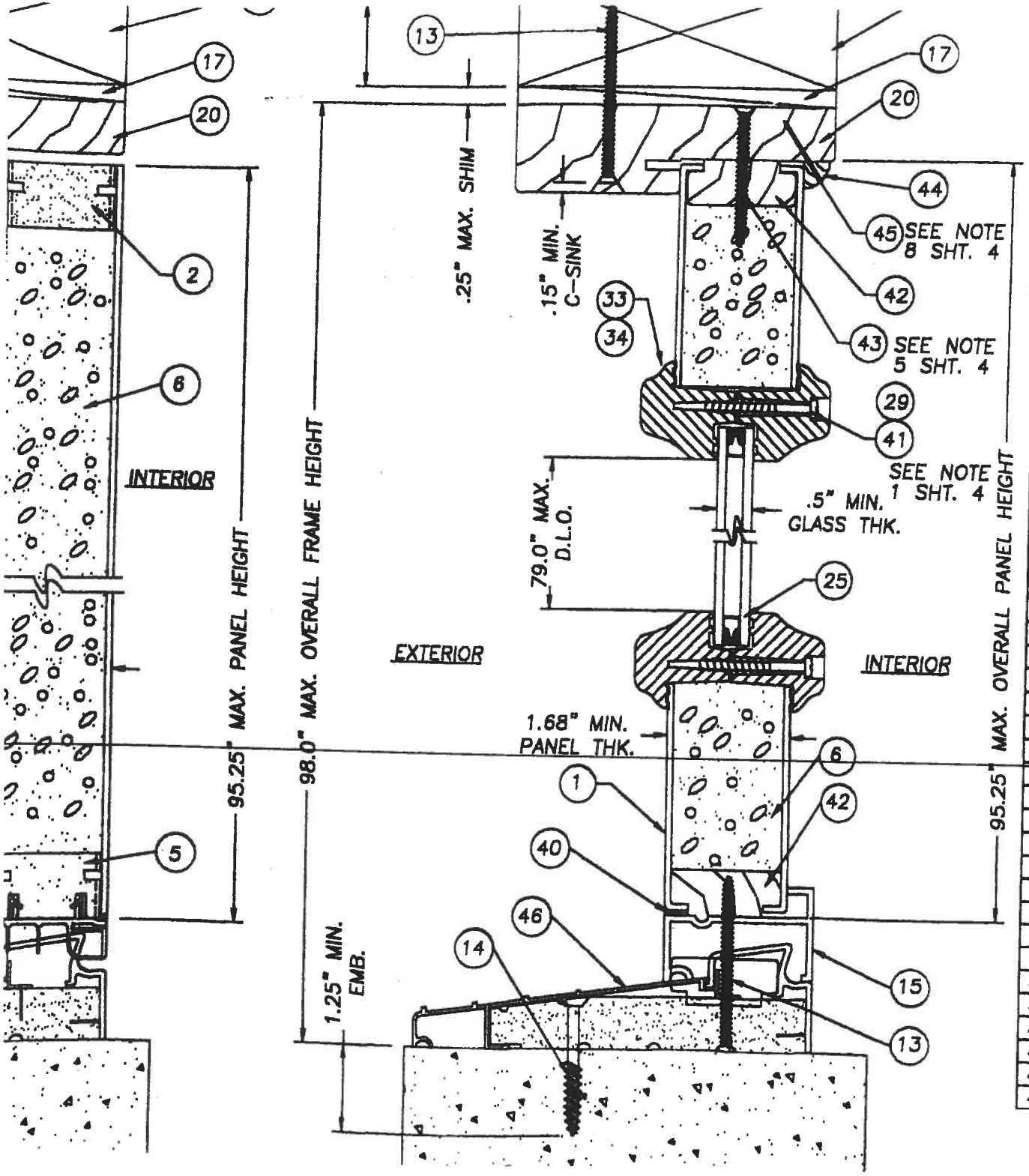

3	LATCH STILE/LOCK BLOCK (THERMA-TRU, LVL OR LSL & OAK 1.50" x 4
4	HINGE STILE (THERMA-TRU, LVL OR LSL & OAK 1.50" x 1.50")
5	BOTTOM RAIL (1.50" x .94" THERMA-TRU WOOD COMPOSITE)
6	POLYURETHANE FOAM (BASF, 1.9lbs. DENSIT
7	SHORT REACH COMPRESSION WEATHERSTRIP (THERMA-
8	LONG REACH COMPRESSION WEATHERSTRIP (THERMA-T
9	4" x 4" HINGE .097" THK. (THERMA-TRU)
10	#10 x 3/4" lg. PFH WOOD SCREW (Hinge to Frame)
11	#10 x 1" LG. PFH WOOD SCREW
12	#10 x 2" LG. PFH WOOD SCREW
13	#8 x 2 1/2" LG. PFH WOOD SCREW
14	3/16" TAPCON ANCHOR (ELCO)
15	SIDELITE BOTTOM BOOT .090" EXTRUDED VIN
16	2x INNER WOOD BUCK
17	MAX. 1/4" SHIM MATERIAL
18	KWIKSET TITAN 700 SERIES PASSAGE LOCK
19	NOT USED
20	HEADER 4.656" x 1.211" (THERMA-TRU, PONDEROSA F
21	4.563" x 1.25" STRIKE JAMB (THERMA-TRU, PONDEROSA I
22	4.563" x 1.25" HINGE JAMB (THERMA-TRU, PONDEROSA P
23	KWIKSET TITAN 700 SERIES DEADBOLT
24	ASTRAGAL WINDJAMBER II WR80T (.052" WAL
25	GLAZING, 1/2" INSULATED TEMPERED GLASS
26	NOT USED
27	#8 x 1" LG. PANHEAD SHEET METAL SCREW
28	NOT USED
29	#6-18 x 1 3/4" PHILLIPS FLATHEAD SCREW (FOR ITEM #.
30	NOT USED
31	NOT USED
32	1/8 THK. CELLULAR GLAZING TAPE (STIK-II TAPE
33	PLASTIC LIP LITE FRAME (PVC, THERMA-TRU)
34	PLASTIC LIP LITE FRAME (SMC, THERMA-TRU)
35	4.656" x 1.211" BLANK JAMB (THERMA-TRU, PONDEROSA I
36	SIDELITE SIDE STILE (THERMA-TRU, 1.531" x .656" PONDEROSA I
37	#10 x 1 3/4" LG. PFH WOOD SCREW
38	SS. LATCH STILE (THERMA-TRU, WOOD COMPOSITE 1.531" x 4.0
39	NOT USED
40	SILICONE CAULK (DOW 795)
41	#8-10 x 1 1/2" PLASCREW (FOR ITEM #34
42	SIDELITE TOP & BOTTOM RAIL (THERMA-TRU, 1.531" x .656" PONDEROSA I
43	#8 x 2" LG. PFH WOOD SCREW
44	3/8" x 3/8" QUARTER ROUND FINGER JOINTED F
45	1" L. x .040" DIA. BRAD TRIM NAIL
46	SELF ADJUSTING INSWING SADDLE THRESHOLD
47	INSWING DOOR BOTTOM SWEEP
48	IVES SURFACE BOLT #454 .25 STEEL
49	1/4-20 SEX BOLT W/ 1/4-20 FEMALE EN

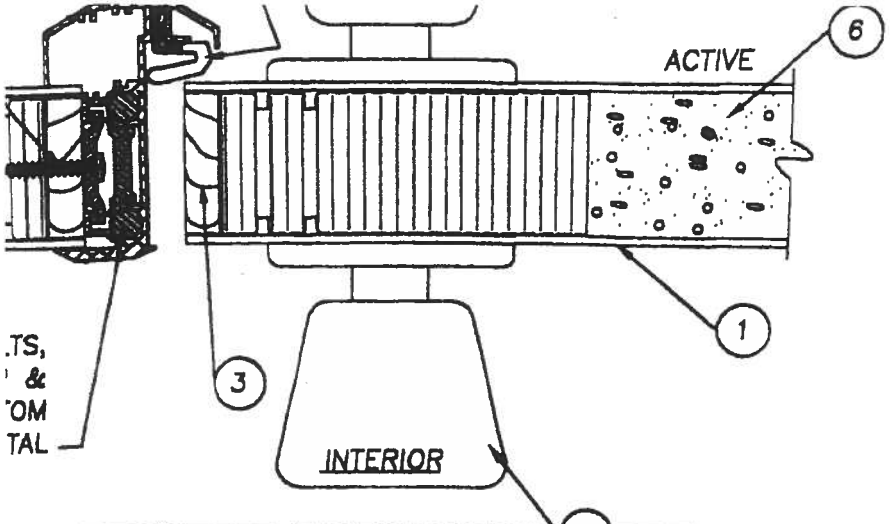

1/3 HORIZONTAL CROSS SECTION
@ ASTRAGAL
(SEE DESIGN PRESSURE CHART)

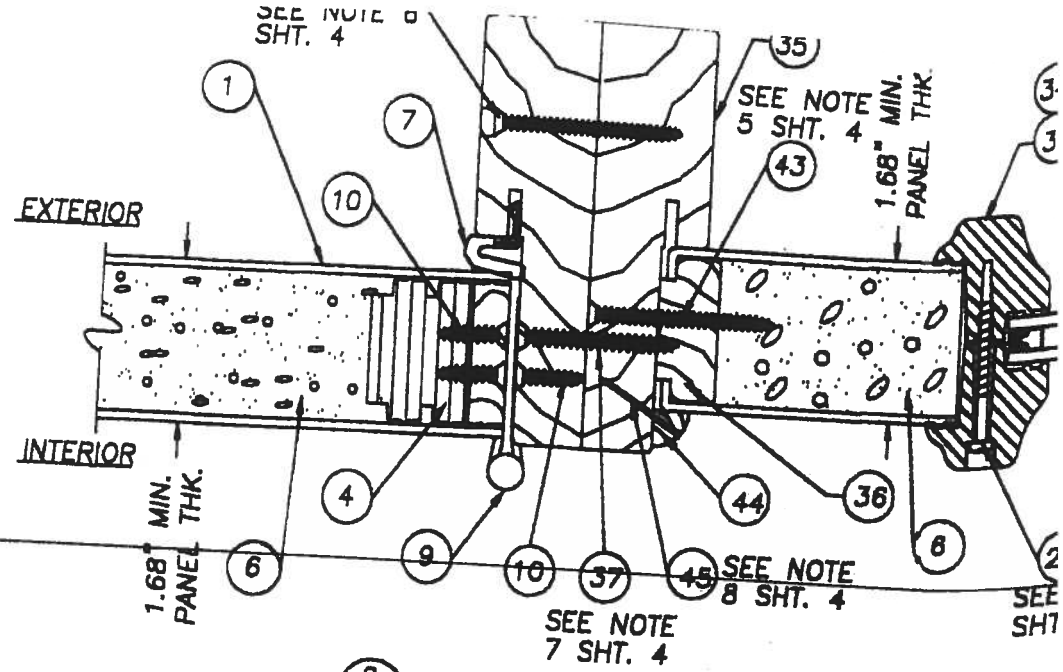

2/3 HORIZONTAL CROSS SECTION
@ HINGE JAMB TO SIDELITE

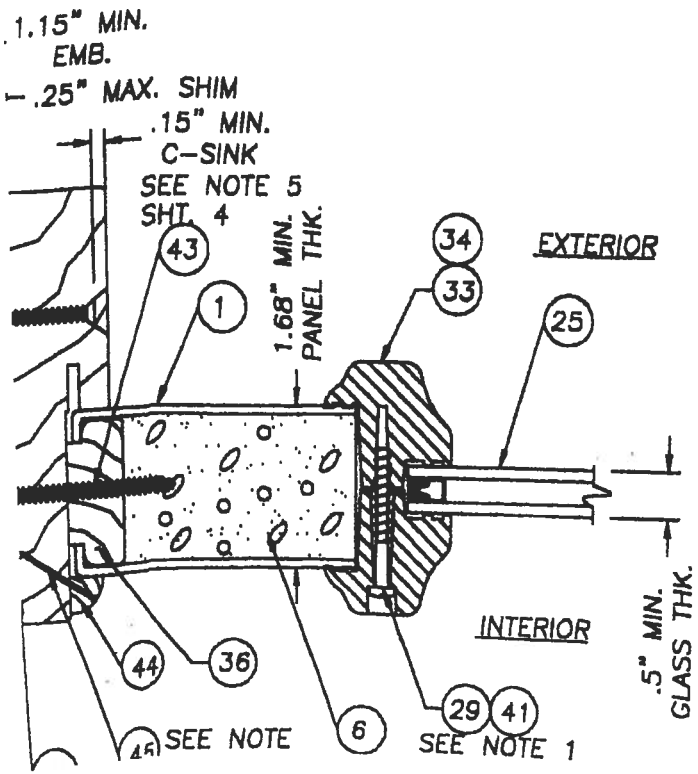

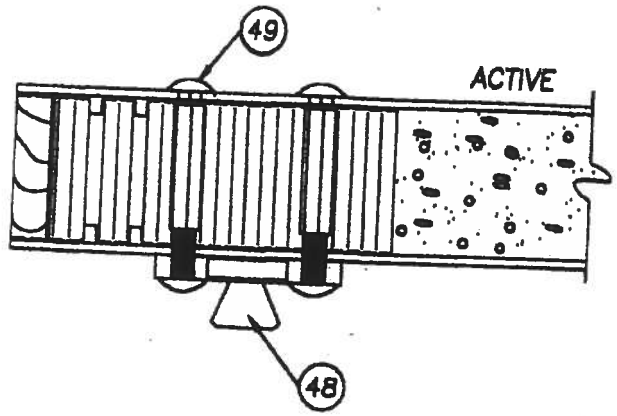

DETAIL "A"
OPTIONAL SURFACE BOLTS IN ACTIVE PANEL
(SEE DESIGN PRESSURE CHART)

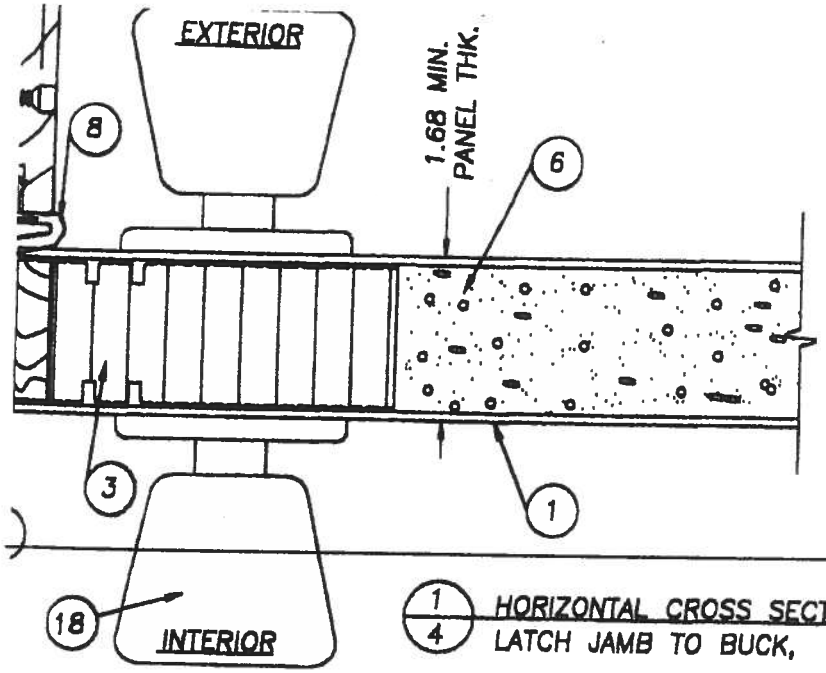

1/4 HORIZONTAL CROSS SECTION
LATCH JAMB TO BUCK,

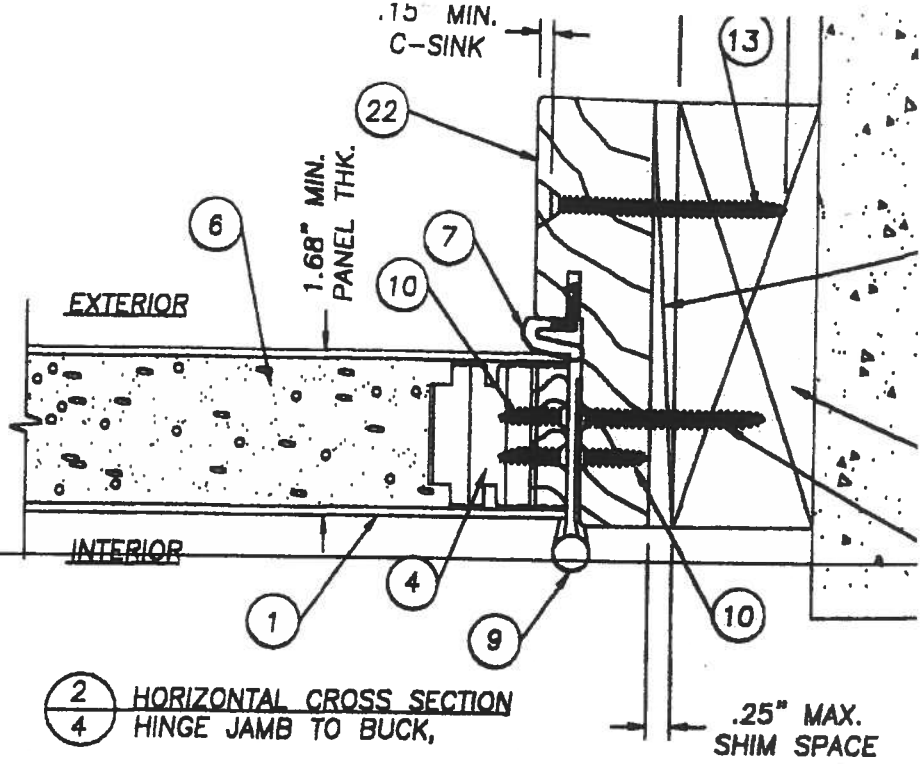

2/4 HORIZONTAL CROSS SECTION
HINGE JAMB TO BUCK,

) IS AS FOLLOWS: FROM
WITH (7) MORE SPACED
CREWS BOTH TOP AND
CORNER.
CREW
INACTIVE DOOR IS AS
", 3", 5", 18.25", 54"

HE SIDE JAMBS WITH

HE SIDE JAMBS WITH

HE JAMB WITH (12)
E ARE (4) AT
OP DOWN AT 13.5",
THE HEADER AT 4"
HE FRAME. THERE ARE
ITSIDE CORNERS.
URING THE MULLIONS
ERIMETER ANCHORING
AND UP FROM THE
16.9" O.C.
JAMB AND THE BUCK
CHING THE HINGE TO

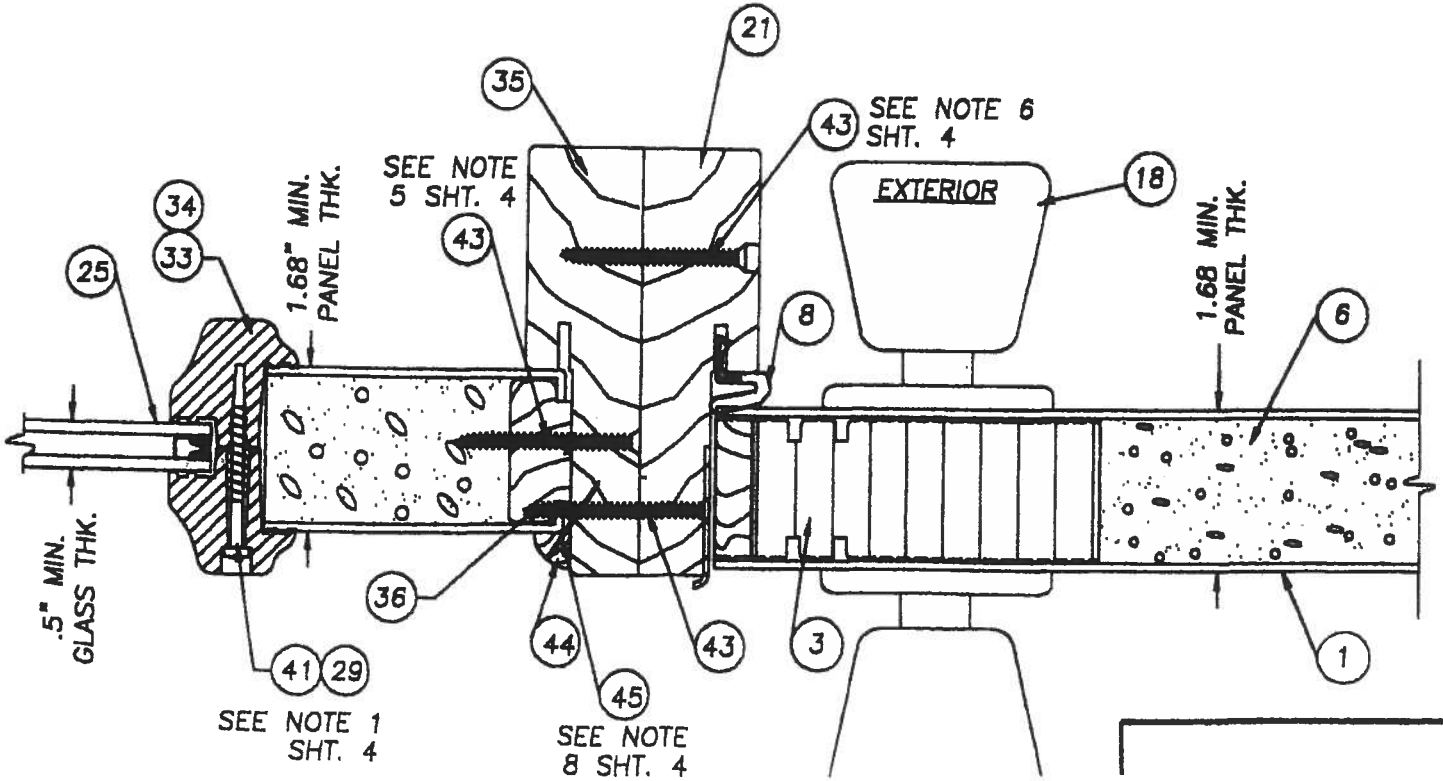

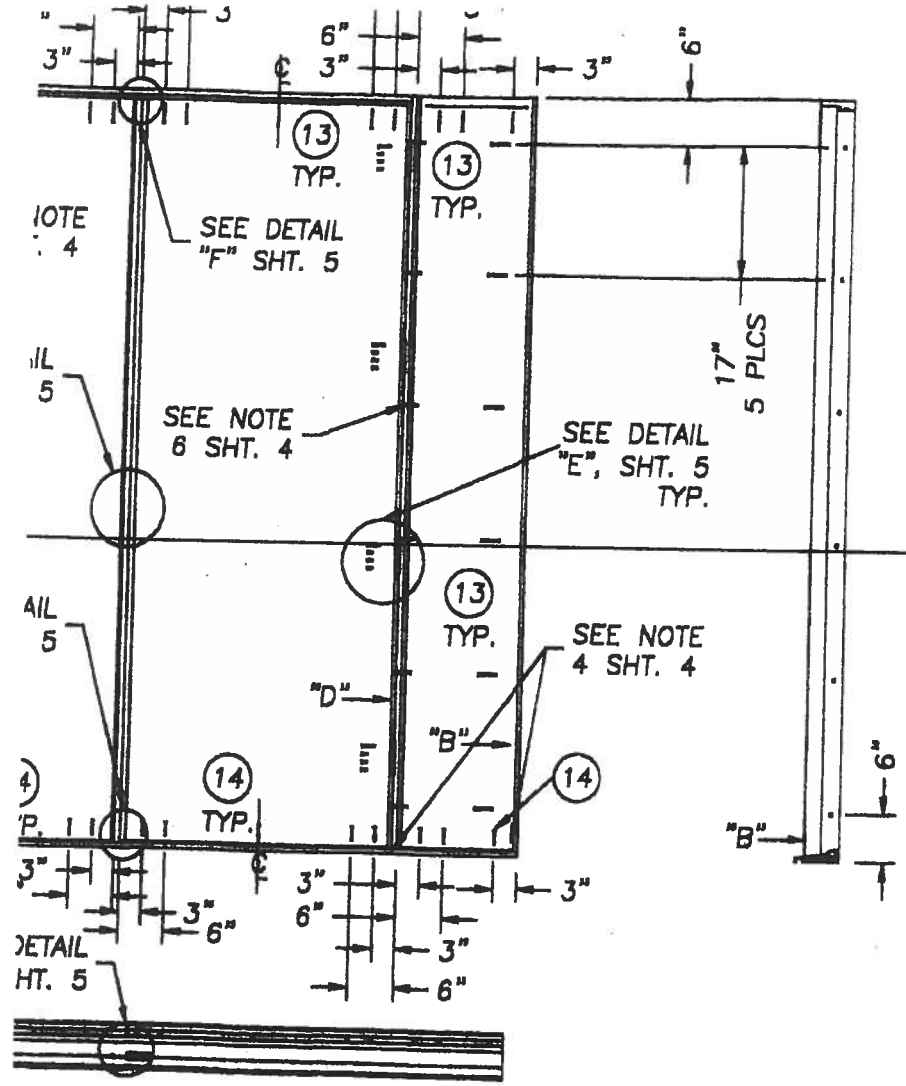

E DOOR W/SIDELITES

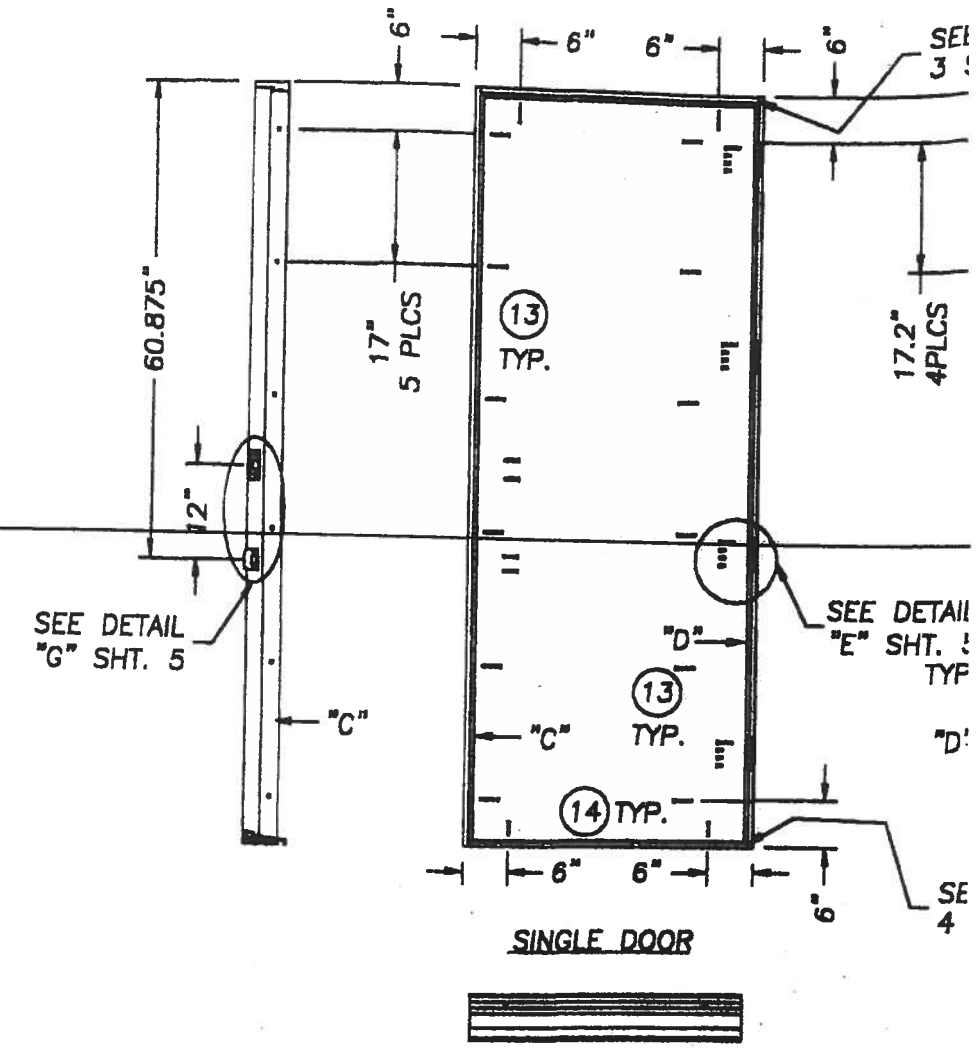

SINGLE DOOR

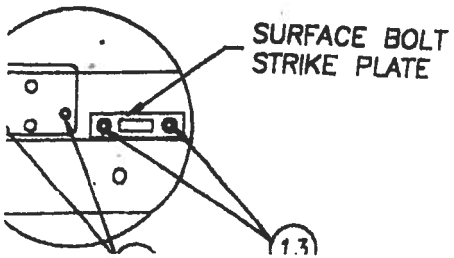

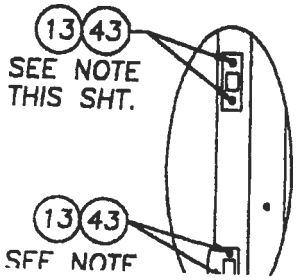

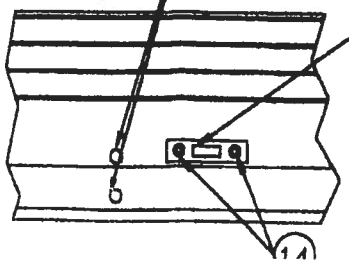

NOTE:
USE ITEM #13 A #8 x 2 1/2" PFH W
ATTACH THE STRIKE AND DEADBOLT PL
JAMB OR ASTRAGAL EXCEPT IN THE MU
APPLICATION WITH THE SIDELITE USE IT
2" PFH WOOD SCREW.

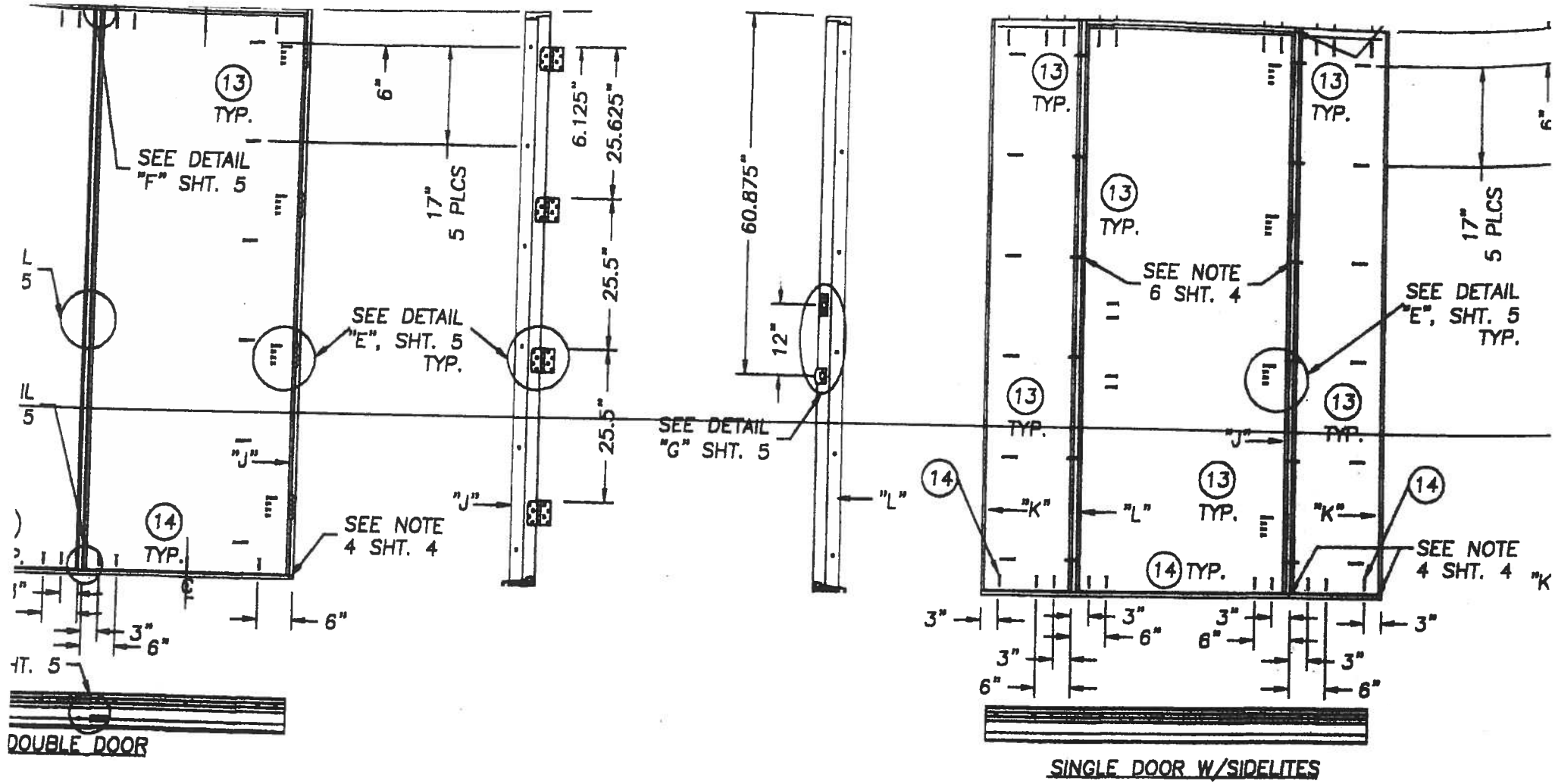
13 TYP.
SEE DETAIL "F" SHT. 5
6"
17" 5 PLCS
6.125"
25.625"
25.5"
25.5"
60.875"
12"
SEE DETAIL "E", SHT. 5 TYP.
SEE DETAIL "G" SHT. 5
"J"
"L"
14 TYP.
SEE NOTE 4 SHT. 4
3"
6"
DOUBLE DOOR
SEE NOTE 6 SHT. 4
SEE DETAIL "E", SHT. 5 TYP.
"K"
SEE NOTE 4 SHT. 4
SINGLE DOOR W/SIDELITES

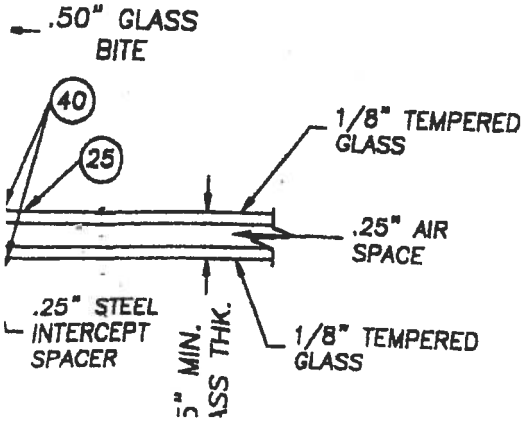
.50" GLASS BITE
40
25
1/8" TEMPERED GLASS
.25" AIR SPACE
.25" STEEL INTERCEPT SPACER
1/8" TEMPERED GLASS

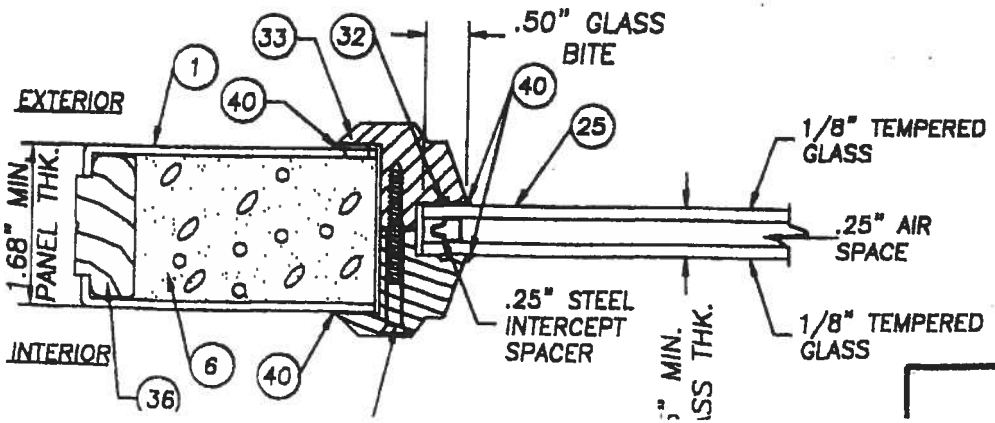
EXTERIOR
INTERIOR
1.68" MIN. PANEL THK.
1
33
32
40
25
6
36
.50" GLASS BITE
1/8" TEMPERED GLASS
.25" AIR SPACE
.25" STEEL INTERCEPT SPACER
1/8" TEMPERED GLASS

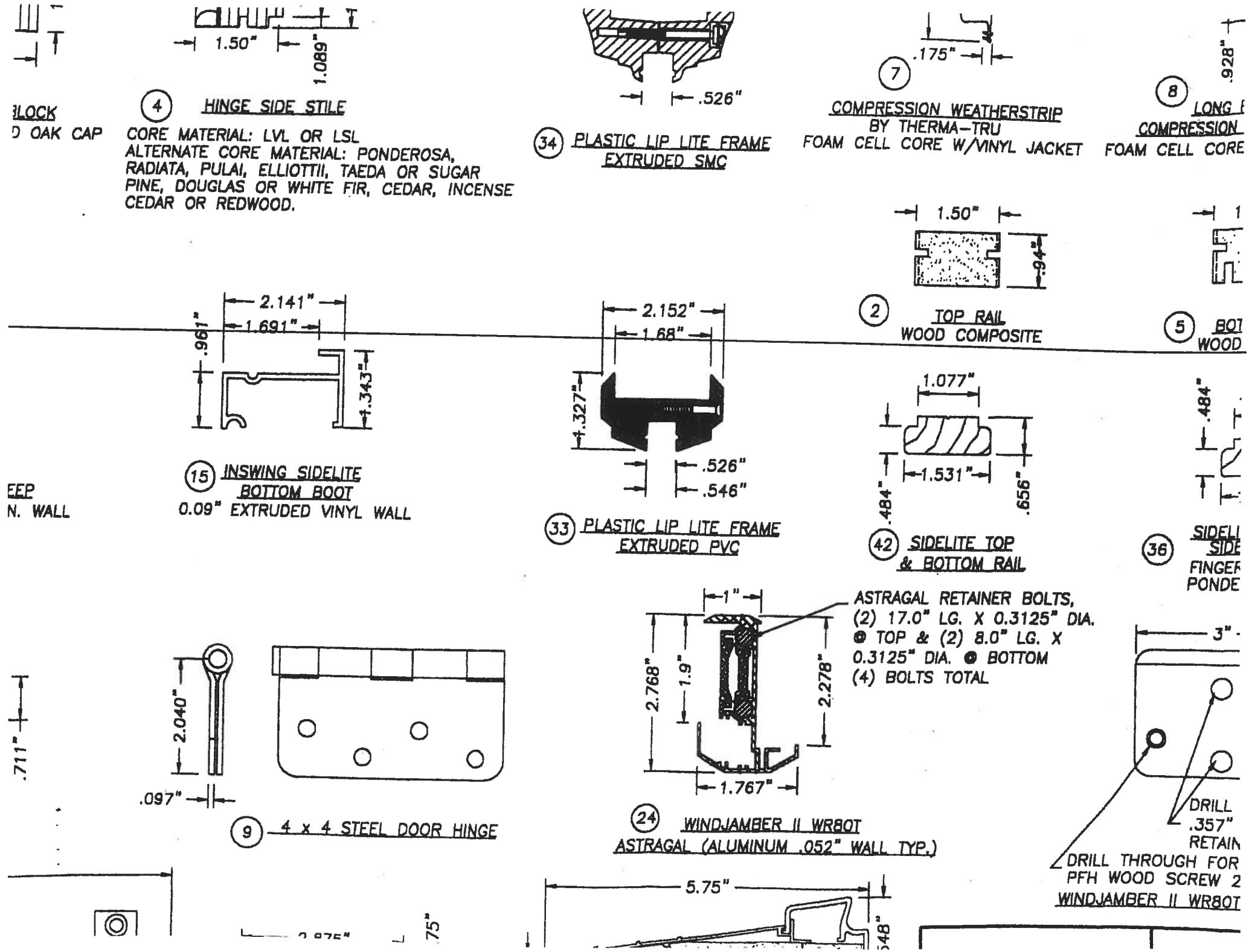
1.50"
1.089"
4 HINGE SIDE STILE
CORE MATERIAL: LVL OR LSL
ALTERNATE CORE MATERIAL: PONDEROSA, RADIATA, PULAI, ELLIOTTII, TAEDA OR SUGAR PINE, DOUGLAS OR WHITE FIR, CEDAR, INCENSE CEDAR OR REDWOOD.
.526"
34 PLASTIC LIP LITE FRAME
EXTRUDED SMC
.175"
7
COMPRESSION WEATHERSTRIP
BY THERMA-TRU
FOAM CELL CORE W/VINYL JACKET
.928"
8
FOAM CELL CORE
1.50"
.94"
2 TOP RAIL
WOOD COMPOSITE
2.141"
1.691"
.961"
1.343"
15 INSWING SIDELITE
BOTTOM BOOT
0.09" EXTRUDED VINYL WALL
2.152"
1.68"
1.327"
.526"
.546"
33 PLASTIC LIP LITE FRAME
EXTRUDED PVC
1.077"
1.531"
.484"
.656"
42 SIDELITE TOP
& BOTTOM RAIL
.484"
36
FINGER
PONDE
.711"
2.040"
.097"
9 4 x 4 STEEL DOOR HINGE
1"
2.768"
1.9"
2.278"
1.767"
ASTRAGAL RETAINER BOLTS,
(2) 17.0" LG. X 0.3125" DIA.
@ TOP & (2) 8.0" LG. X
0.3125" DIA. @ BOTTOM
(4) BOLTS TOTAL
24 WINDJAMBER II WR80T
ASTRAGAL (ALUMINUM .052" WALL TYP.)
3"
DRILL
.357"
DRILL THROUGH FOR
PFH WOOD SCREW 2
WINDJAMBER II WR80T
5.75"

Outswing

MIAMI-DADE

BUILDING CODE COMPLIANCE OFFICE (BCCO)
PRODUCT CONTROL DIVISION

MIAMI-DADE COUNTY, FLORIDA
METRO-DADE FLAGLER BUILDING
140 WEST FLAGLER STREET, SUITE 1603
MIAMI, FLORIDA 33130-1563
(305) 375-2901 FAX (305) 375-2908

NOTICE OF ACCEPTANCE (NOA)

Therma-Tru Corporation
1687 Woodlands Drive
Maumee, Ohio 43537

SCOPE:
This NOA is being issued under the applicable rules and regulations governing the use of construction materials. The documentation submitted has been reviewed by Miami-Dade County Product Control Division and accepted by the Board of Rules and Appeals (BORA) to be used in Miami Dade County and other areas where allowed by the Authority Having Jurisdiction (AHJ).

This NOA shall not be valid after the expiration date stated below. The Miami-Dade County Product Control Division (In Miami Dade County) and/or the AHJ (in areas other than Miami Dade County) reserve the right to have this product or material tested for quality assurance purposes. If this product or material fails to perform in the accepted manner, the manufacturer will incur the expense of such testing and the AHJ may immediately revoke, modify, or suspend the use of such product or material within their jurisdiction. BORA reserves the right to revoke this acceptance, if it is determined by Miami-Dade County Product Control Division that this product or material fails to meet the requirements of the applicable building code.

This product is approved as described herein, and has been designed to comply with the High Velocity Hurricane Zone of the Florida Building Code.

DESCRIPTION: "Classic Craft" 8'0 Outswing Opaque Fiberglass Door w & w/o Sidelites

APPROVAL DOCUMENT: Drawing No. **S-2162**, titled "Classic Craft Opaque" Single & Double Outswing 8'0 Fiberglass Door, sheets 1 through 7, prepared by RW Building Consultants, Inc., dated 11/10/01, with revision #2 dated 5/27/02, bearing the Miami-Dade County Product Control Approval stamp with the Notice of Acceptance number and approval date by the Miami-Dade County Product Control Division.

MISSILE IMPACT RATING: None

LABELING: Each unit shall bear a permanent label with the manufacturer's name or logo, city, state and following statement: "Miami-Dade County Product Control Approved", unless otherwise noted herein.

RENEWAL of this NOA shall be considered after a renewal application has been filed and there has been no change in the applicable building code negatively affecting the performance of this product.

TERMINATION of this NOA will occur after the expiration date or if there has been a revision or change in the materials, use, and/or manufacture of the product or process. Misuse of this NOA as an endorsement of any product, for sales, advertising or any other purposes shall automatically terminate this NOA. Failure to comply with any section of this NOA shall be cause for termination and removal of NOA.

ADVERTISEMENT: The NOA number preceded by the words Miami-Dade County, Florida, and followed by the expiration date may be displayed in advertising literature. If any portion of the NOA is displayed, then it shall be done in its entirety.

INSPECTION: A copy of this entire NOA shall be provided to the user by the manufacturer or its distributors and shall be available for inspection at the job site at the request of the Building Official.
This NOA consists of this page 1 as well as approval document mentioned above
The submitted documentation was reviewed by **Manuel Perez, P.E.**

OTS

) IEET THE FLORIDA

ST BE ANCHORED PROPERLY
STRUCTURE.

AS LISTED AND SPACED AS
EMBEDMENT TO BASE MATERIAL
SING OR STUCCO.

EE TABLE SHEET 1.

ER REQUIREMENTS FOR
" WITH USE OF HIGH DAM

IN AREAS REQUIRING WIND
RIDA BUILDING CODE
HUTTERS ARE REQUIRED.

CAN BE USED IN A
TION.

FIBERGLASS DOOR
ne conditions)

5" minimum thickness,
psi
ore,

is constructed from a
d (SMC). The interior cavity
polyurethane foam. The
e wood stiles and rails.
or LSL. The latch stile
ch reinforcement. The top
mposite material. In the
e door is fitted with an
060-T6 alloy.
ed from finger jointed pine. The
) #8 x 2 1/2" long Phillips flathead
d together in a sidelite application
screws per each mullion. The units
Low Profile or High Water Dam type.
dwich glazed using a two piece
xterior with an 1/8" thk. cellular
licon Compound. The lite frames are
screw or a #6-18 1 3/4" long

CONTENTS
CRIPTION
GENERAL NOTES
ONS & BILL OF MATERIALS

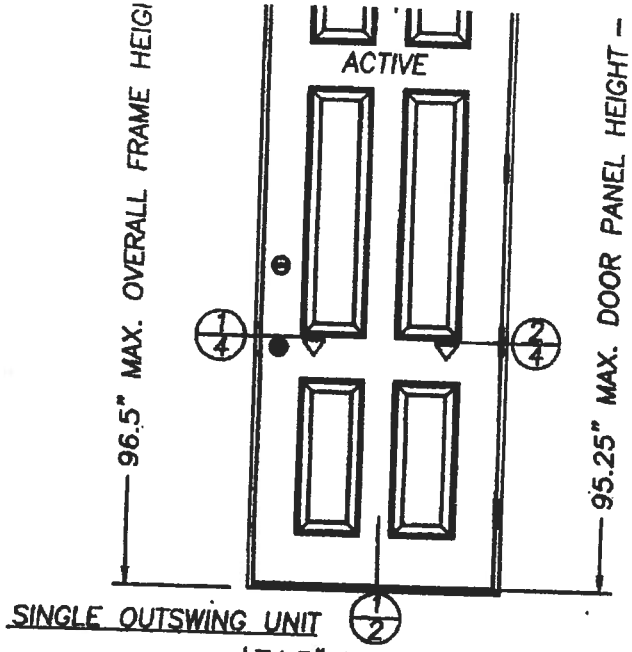

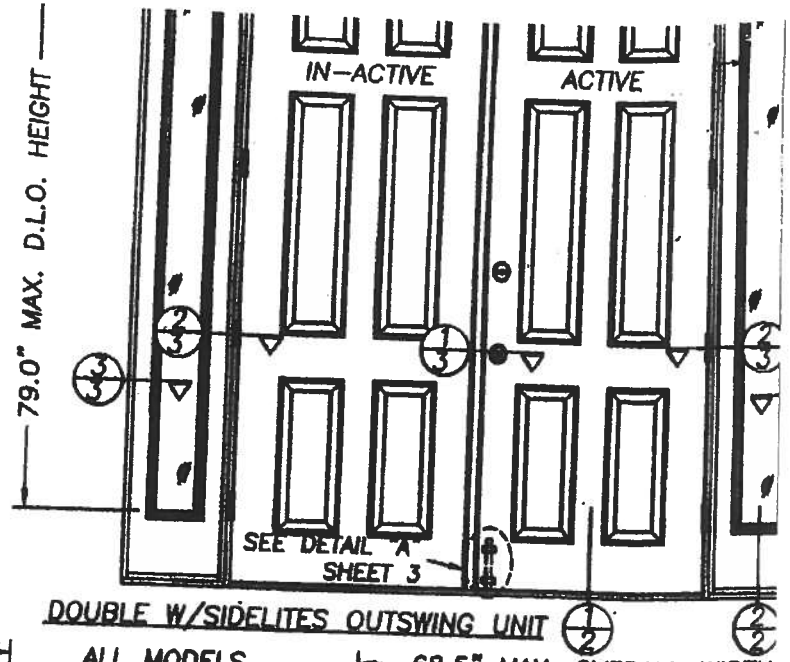

ALL MODELS
ARE VIEWED
FROM INTERIOR

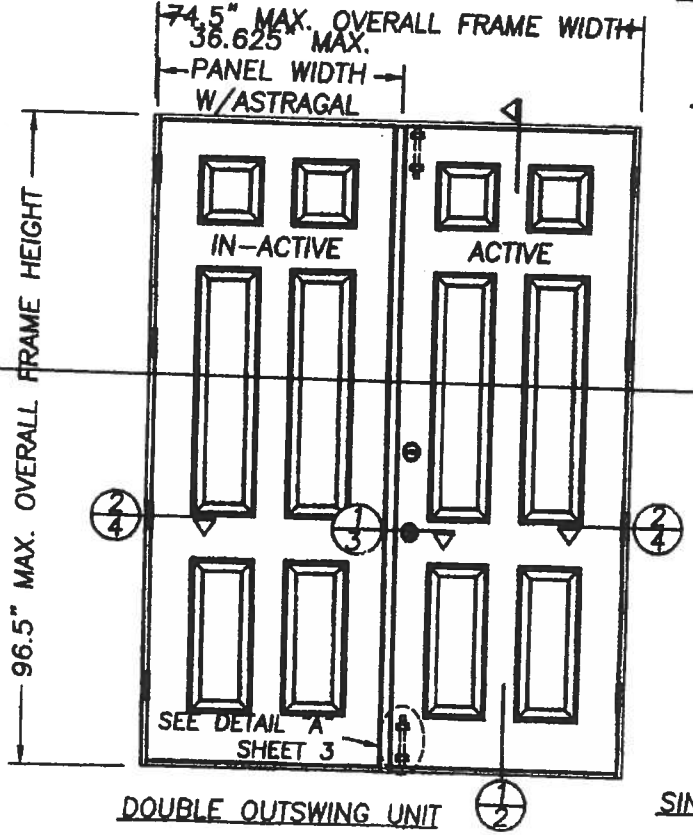

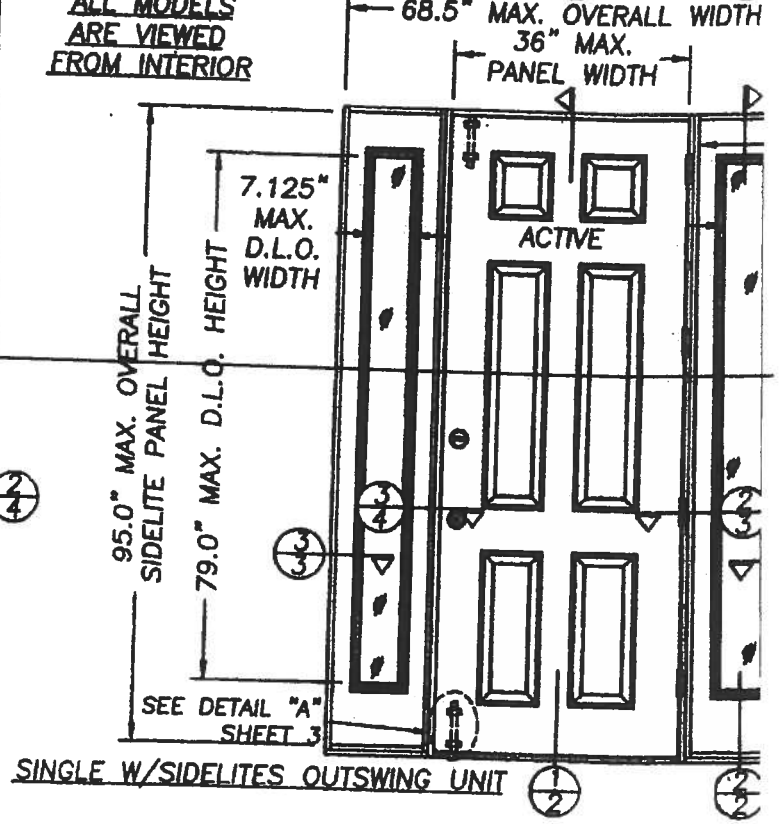

DESIGN PRESSURE RATING
WHERE WATER INFILTRATION IS REQUIRED

A1

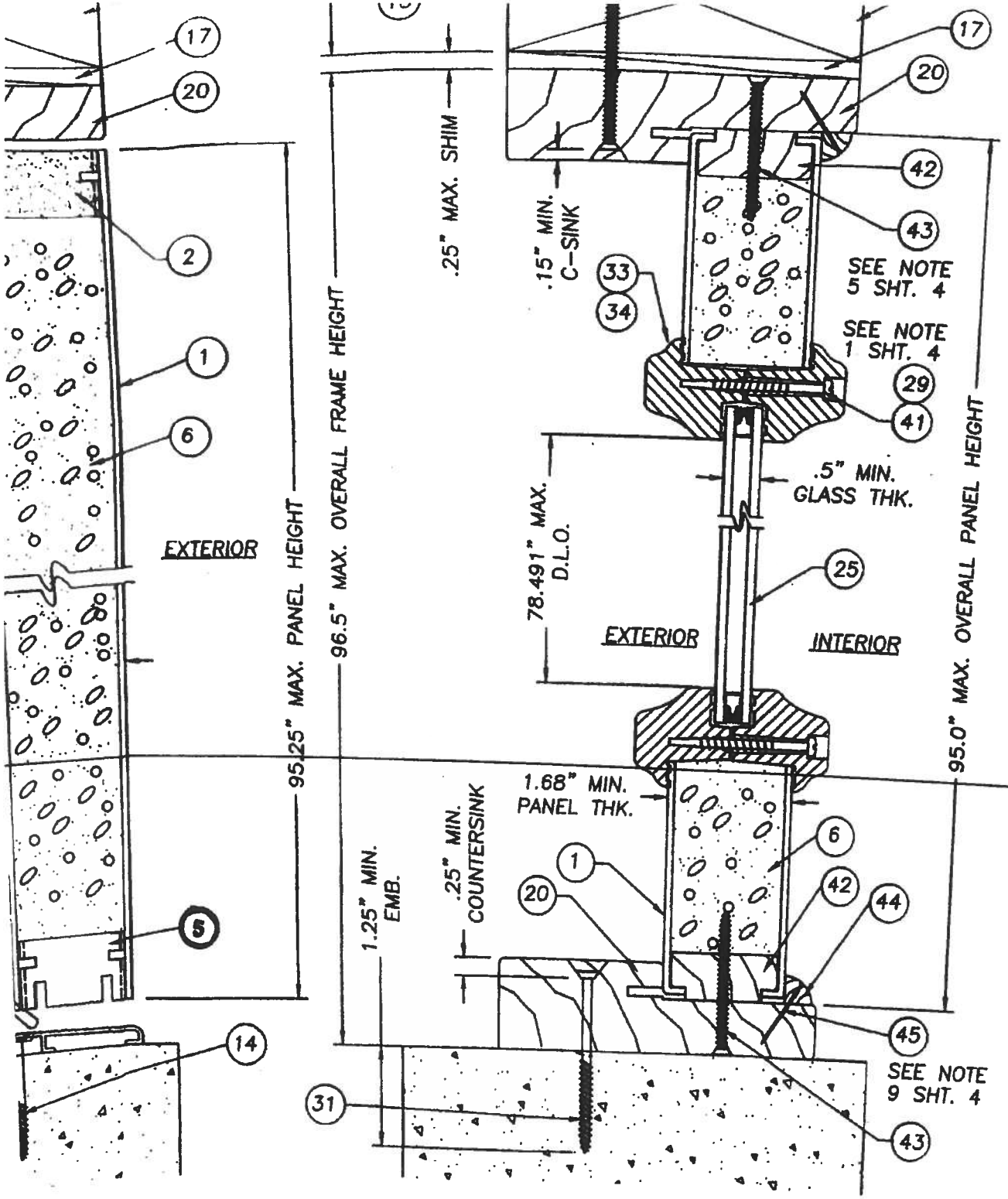

4	HINGE STILE (THERMA-TRU, LVL OR LSL & OAK 1.50" x
5	BOTTOM RAIL (1.50" x .94" THERMA-TRU WOOD COMPOS
6	POLYURETHANE FOAM (BASF, 1.9lbs. DENSITY)
7	SHORT REACH COMPRESSION WEATHERSTRIP (THERMA-TR
8	LONG REACH COMPRESSION WEATHERSTRIP (THERMA-TRU
9	4" x 4" HINGE .097" THK. (THERMA-TRU)
10	#10 x 3/4" lg. PFH WOOD SCREW (Hinge to Frame)
11	NOT USED
12	#10 x 2" LG. PFH WOOD SCREW
13	#8 x 2 1/2" LG. PFH WOOD SCREW
14	3/16" TAPCON ANCHOR (ELCO)
15	NOT USED
16	2x INNER WOOD BUCK
17	MAX. 1/4" SHIM MATERIAL
18	KWIKSET TITAN 700 SERIES PASSAGE LOCK
19	ONE PIECE BUMP FACE THRESHOLD (THERMA-TRU) (NOT FOR USE IN "HIGH VELOCITY HURRICANE ZONES"
20	HEADER 4.656" x 1.211" (THERMA-TRU, PINE)
21	4.563" x 1.25" STRIKE JAMB (THERMA-TRU, PINE)
22	4.563" x 1.25" HINGE JAMB (THERMA-TRU, PINE)
23	KWIKSET TITAN 700 SERIES DEADBOLT
24	ASTRAGAL WINDJAMBER II WR80T (.052" WALL)
25	GLAZING, 1/2" INSULATED TEMPERED GLASS
26	NOT USED
27	#8 x 1" LG. PANHEAD SHEET METAL SCREW
28	NOT USED
29	#6-18 x 1 3/4" PHILLIPS FLATHEAD SCREW (FOR ITEM
30	NOT USED
31	3/16" TAPCON ANCHOR (ELCO, 2.5" MIN. LG.)
32	1/8 THK. CELLULAR GLAZING TAPE (STIK-II TAPE)
33	PLASTIC LIP LITE FRAME (PVC, THERMA-TRU)
34	PLASTIC LIP LITE FRAME (SMC THERMA-TRU
35	4.656" x 1.211" BLANK JAMB (THERMA-TRU PINE)
36	SIDELITE SIDE STILE (THERMA-TRU, 1.531" x .6 PINE)
37	#10 x 1 3/4" LG. PFH WOOD SCREW
38	SS. LATCH STILE (THERMA-TRU, WOOD COMPOSITE 1.531" x
39	HIGH WATER DAM THRESHOLD (USE IS REQUIRED IN "HIGH VELOCITY HURRICANE ZONES
40	SILICONE CAULK (DOW 795)
41	#8-10 x 1 1/2" PLASCREW (FOR ITEM #34)
42	SIDELITE TOP & BOTTOM RAIL (THERMA-TRU, 1.5 x 656"
43	#8 x 2" LG. PFH WOOD SCREW
44	3/8" x 3/8" QUARTER ROUND FINGER JOINTE PINE
45	1" L. x .040" DIA. BRAD TRIM NAIL
46	IVES SURFACE BOLT #454 8.0" L x .25" THK
47	1/4-20 SEX BOLT W/1/4-20 FEMALE END x 4" L.

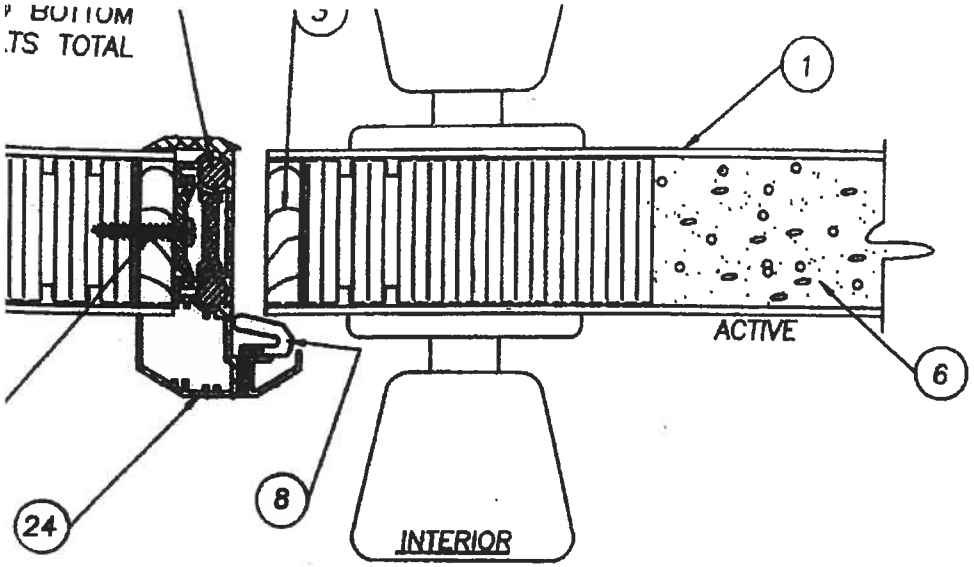

1/3 HORIZONTAL CROSS SECTION
● ASTRAGAL
(SEE DESIGN PRESSURE RATE CHART)

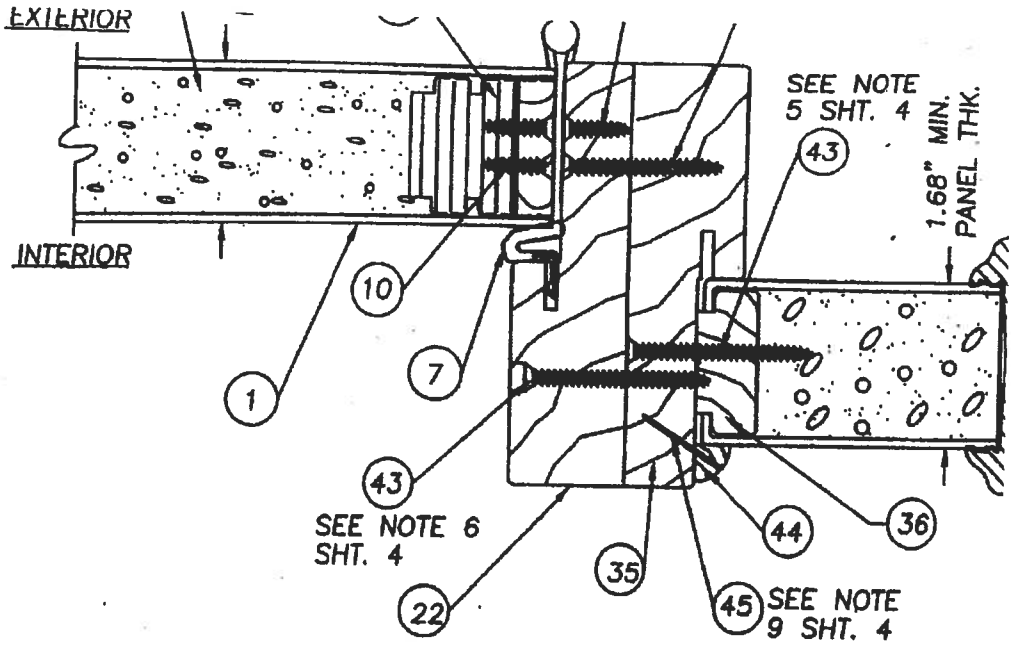

2/3 HORIZONTAL CROSS SI
● HINGE JAMB TO SID

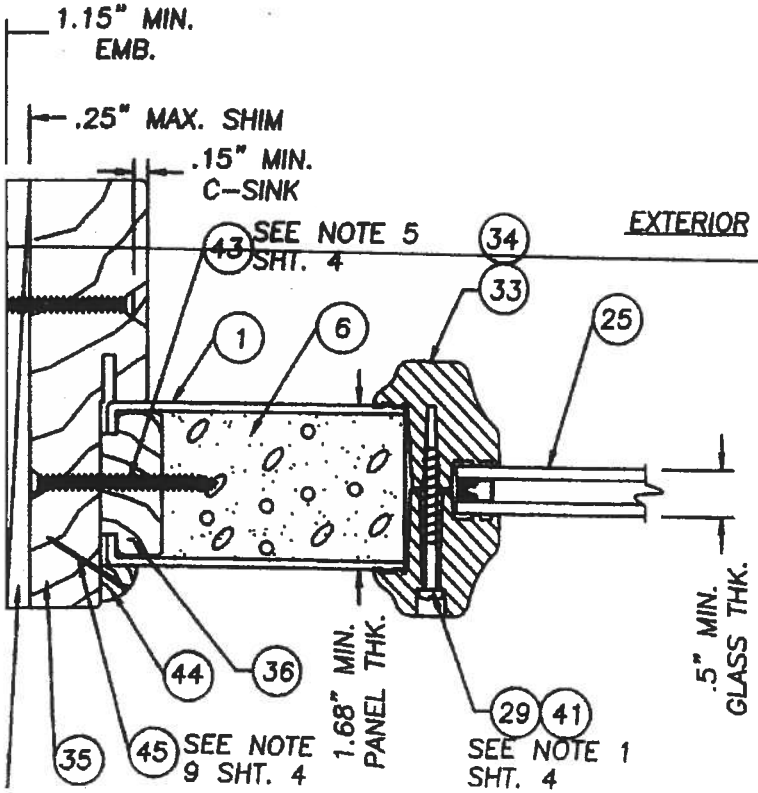

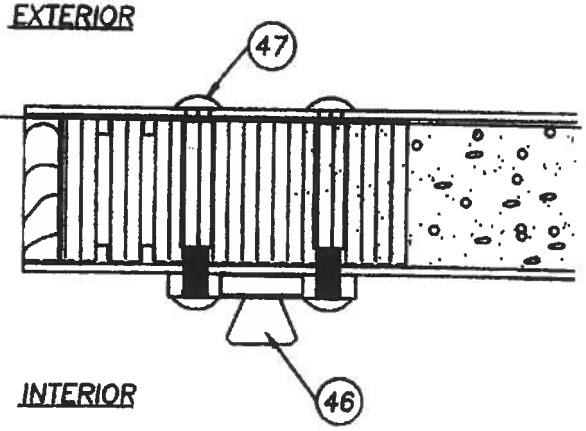

DETAIL "A"
OPTIONAL SURFACE BOLTS IN ACTIVE
(SEE DESIGN PRESSURE CHART)

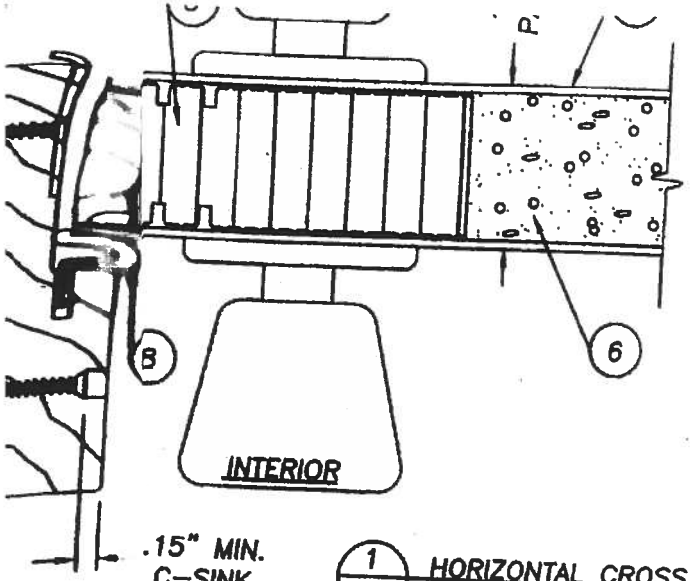

5" MIN.
MBED.

1/4 HORIZONTAL CROSS SECTION
LATCH JAMB TO BUCK,

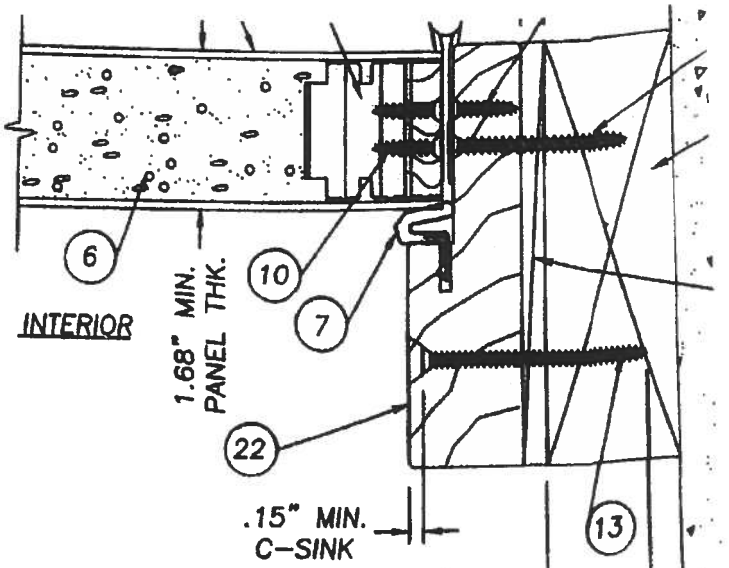

2/4 HORIZONTAL CROSS SECTION
HINGE JAMB TO BUCK,

REWS) IS AS FOLLOWS: FROM
.5", WITH (7) MORE SPACED
2) SCREW BOTH TOP AND
EACH CORNER.
" PANHEAD SCREW
THE INACTIVE DOOR IS AS
WN 1", 3", 5", 18.25", 54"

~~TO THE SIDE JAMBS WITH~~

TO THE SIDE JAMBS WITH

ITO THE JAMB WITH (12)
THERE ARE (4) AT
HE TOP DOWN AT 13.5",
2) AT THE HEADER AT 4"
OF THE FRAME. THERE ARE
IE OUTSIDE CORNERS.
SECURING THE MULLIONS
HE PERIMETER ANCHORING
TOP AND UP FROM THE
ED AT 16.9" O.C.
O THE JAMB AND THE BUCK
ATTACHING THE HINGE TO
AT THE MULLION USE ITEM

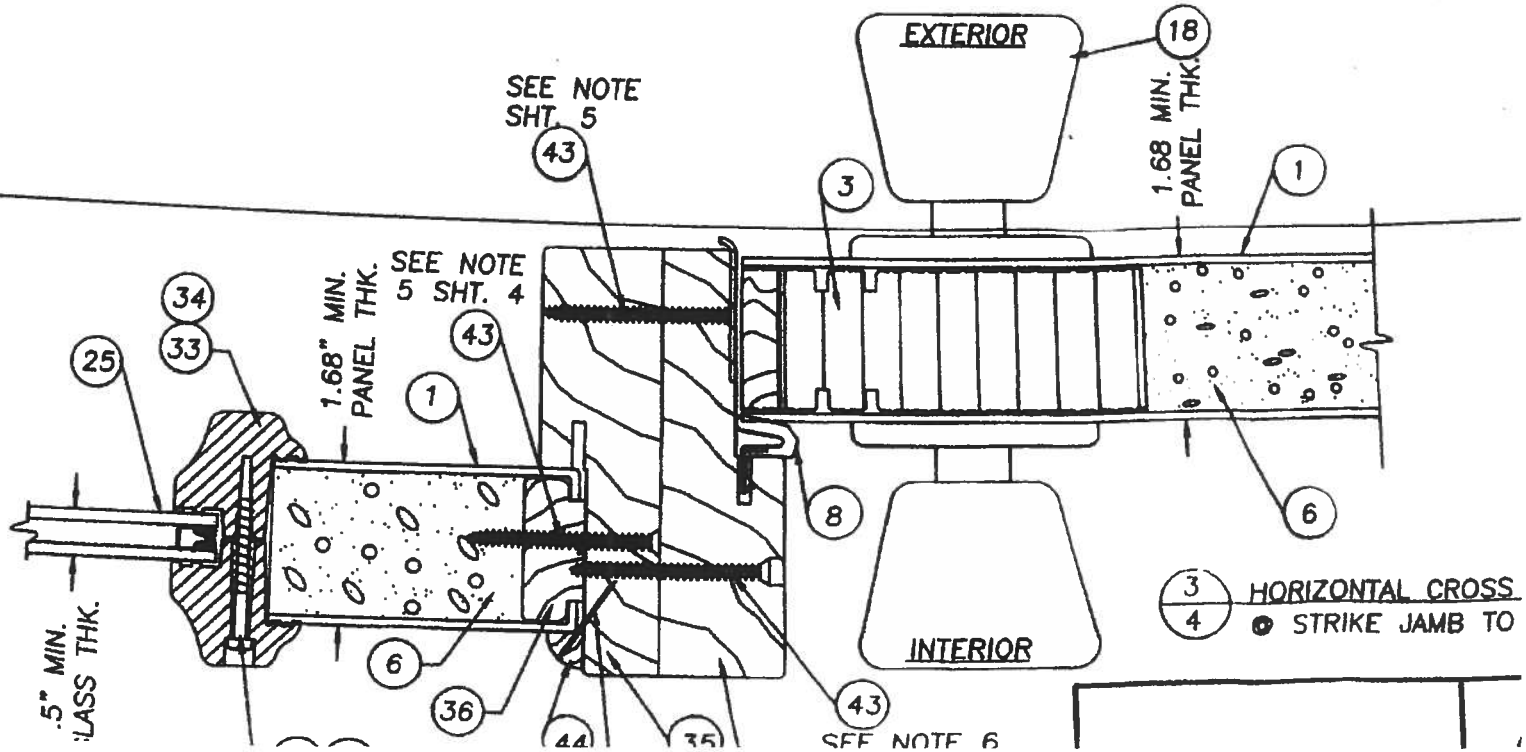

3/4 HORIZONTAL CROSS
STRIKE JAMB TO

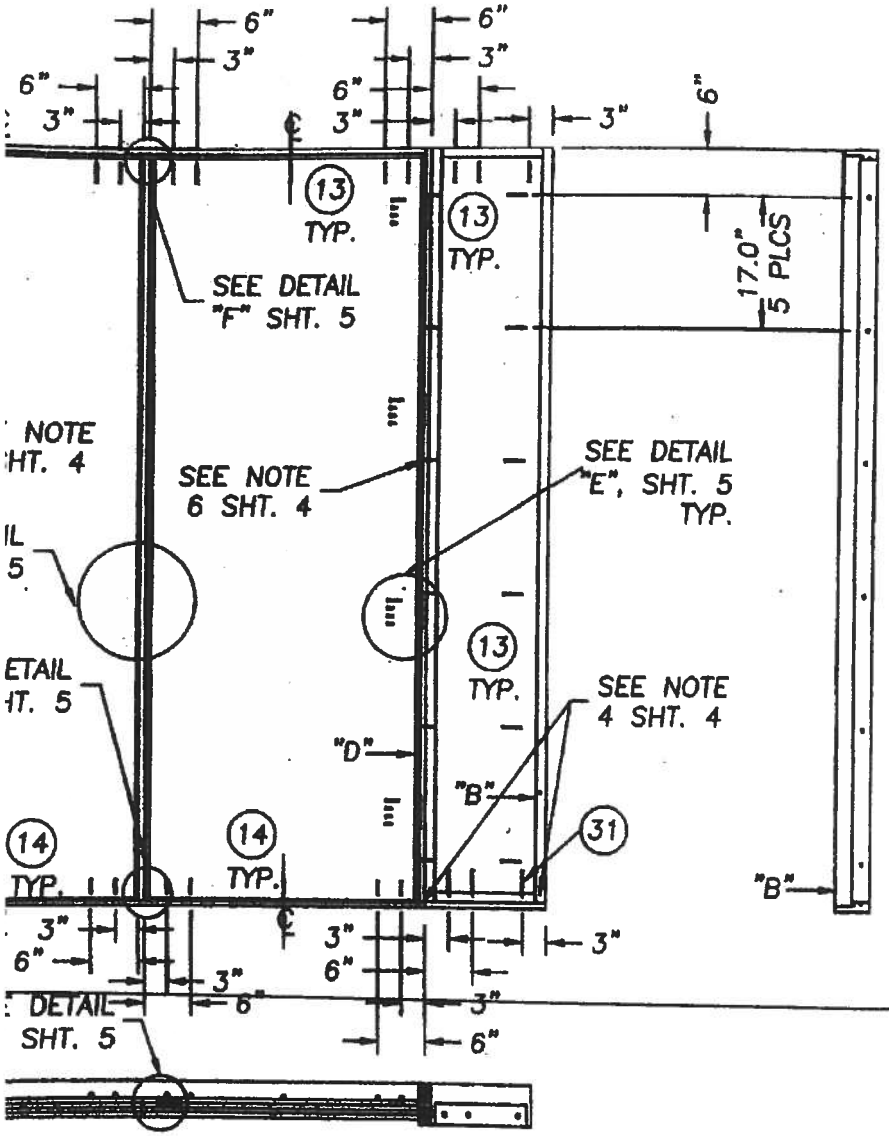

BLE DOOR W/SIDELITES

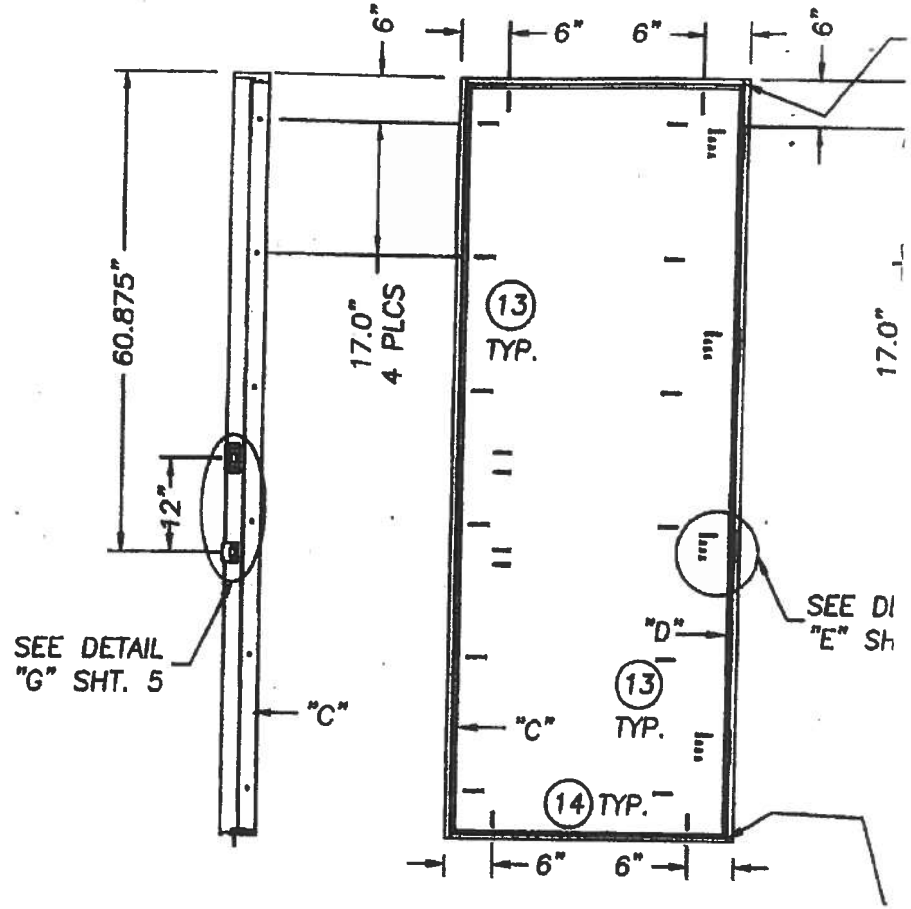

SINGLE DOOR

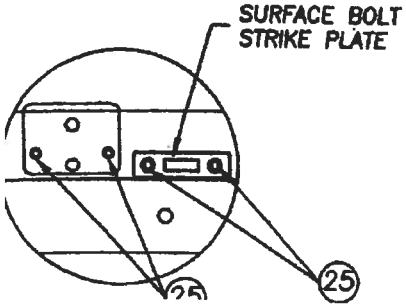

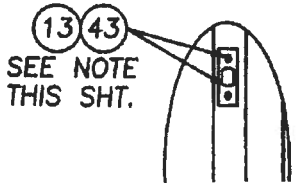

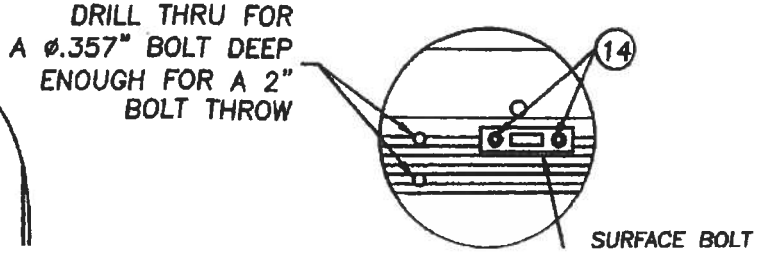

NOTE:
USE #8 x 2 1/2" PFH WOOD SCR
STRIKE AND DEADBOLT PLATES TO
ASTRAGAL EXCEPT IN THE MULLED
THE SIDELITE USE #8 x 2" PFH W

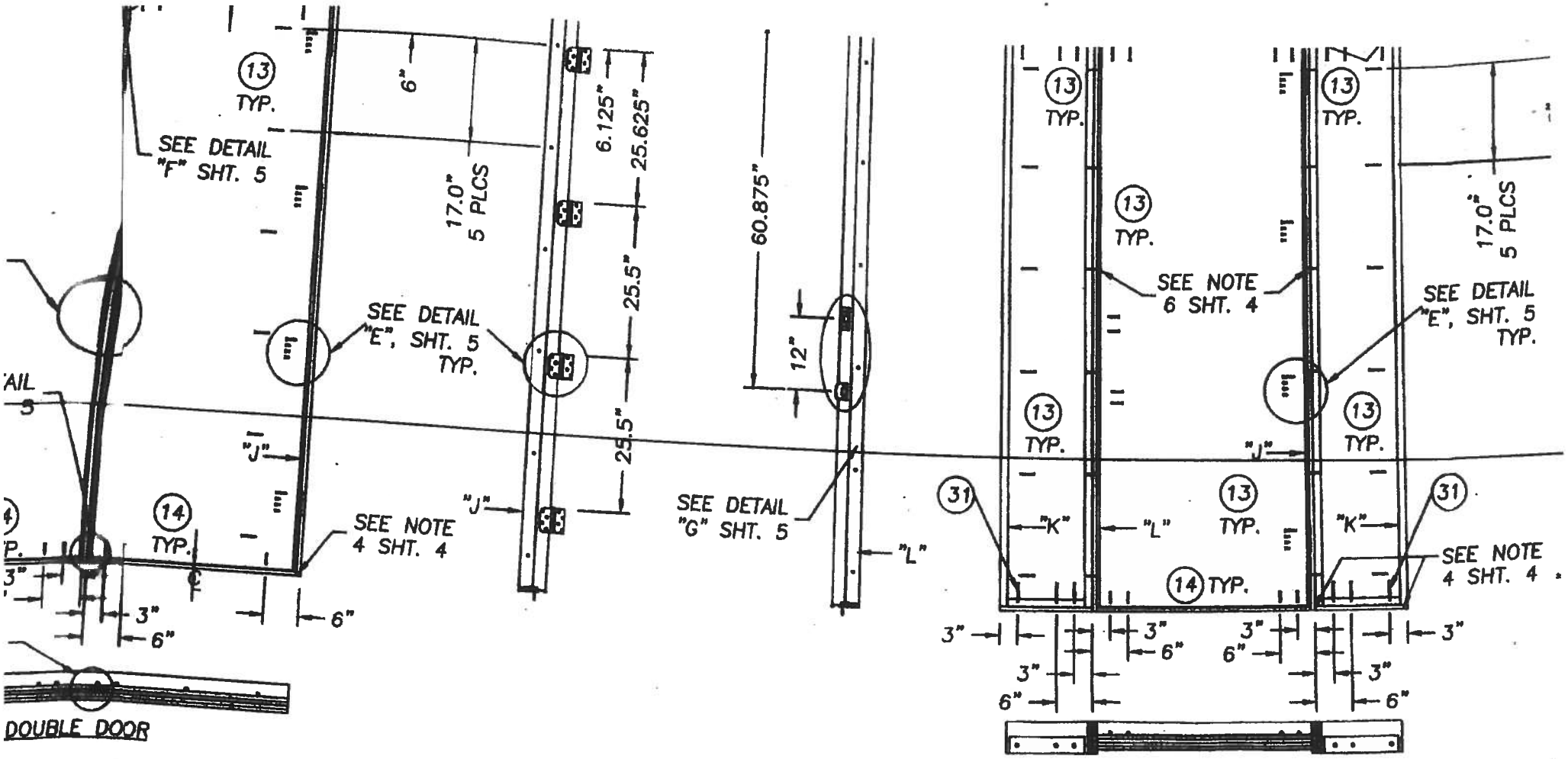
13 TYP.
SEE DETAIL "F" SHT. 5
6"
17.0" 5 PLCS
6.125"
25.625"
25.5"
25.5"
SEE DETAIL "E", SHT. 5 TYP.
"J"
14 TYP.
SEE NOTE 4 SHT. 4
3"
6"
60.875"
12"
SEE DETAIL "G" SHT. 5
"L"
DOUBLE DOOR
SEE NOTE 6 SHT. 4
SEE DETAIL "E", SHT. 5 TYP.
31
"K"
"L"
SEE NOTE 4 SHT. 4
SINGLE DOOR W/SIDELITES

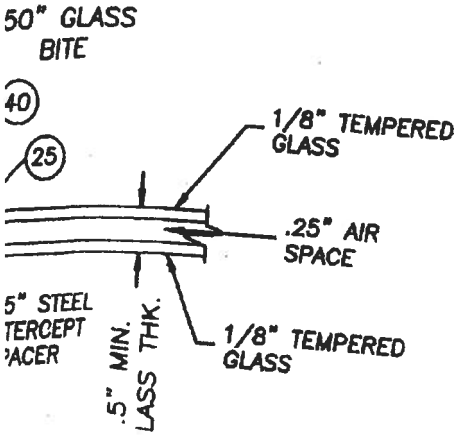
50" GLASS BITE
40
25
1/8" TEMPERED GLASS
.25" AIR SPACE
5" STEEL TERCEPT PACER
.5" MIN. LASS THK.
1/8" TEMPERED GLASS

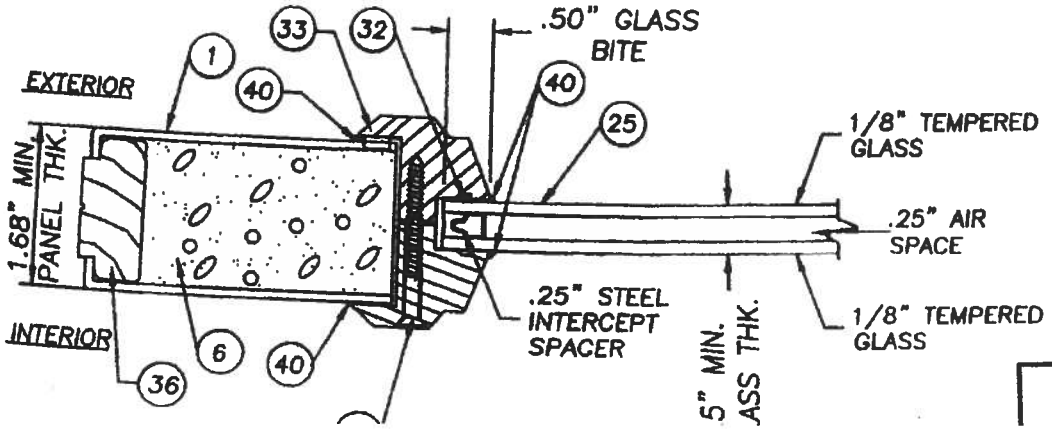
EXTERIOR
1
33
32
.50" GLASS BITE
40
25
1/8" TEMPERED GLASS
1.68" MIN. PANEL THK.
.25" AIR SPACE
.25" STEEL INTERCEPT SPACER
5" MIN. ASS THK.
1/8" TEMPERED GLASS
INTERIOR
36
6

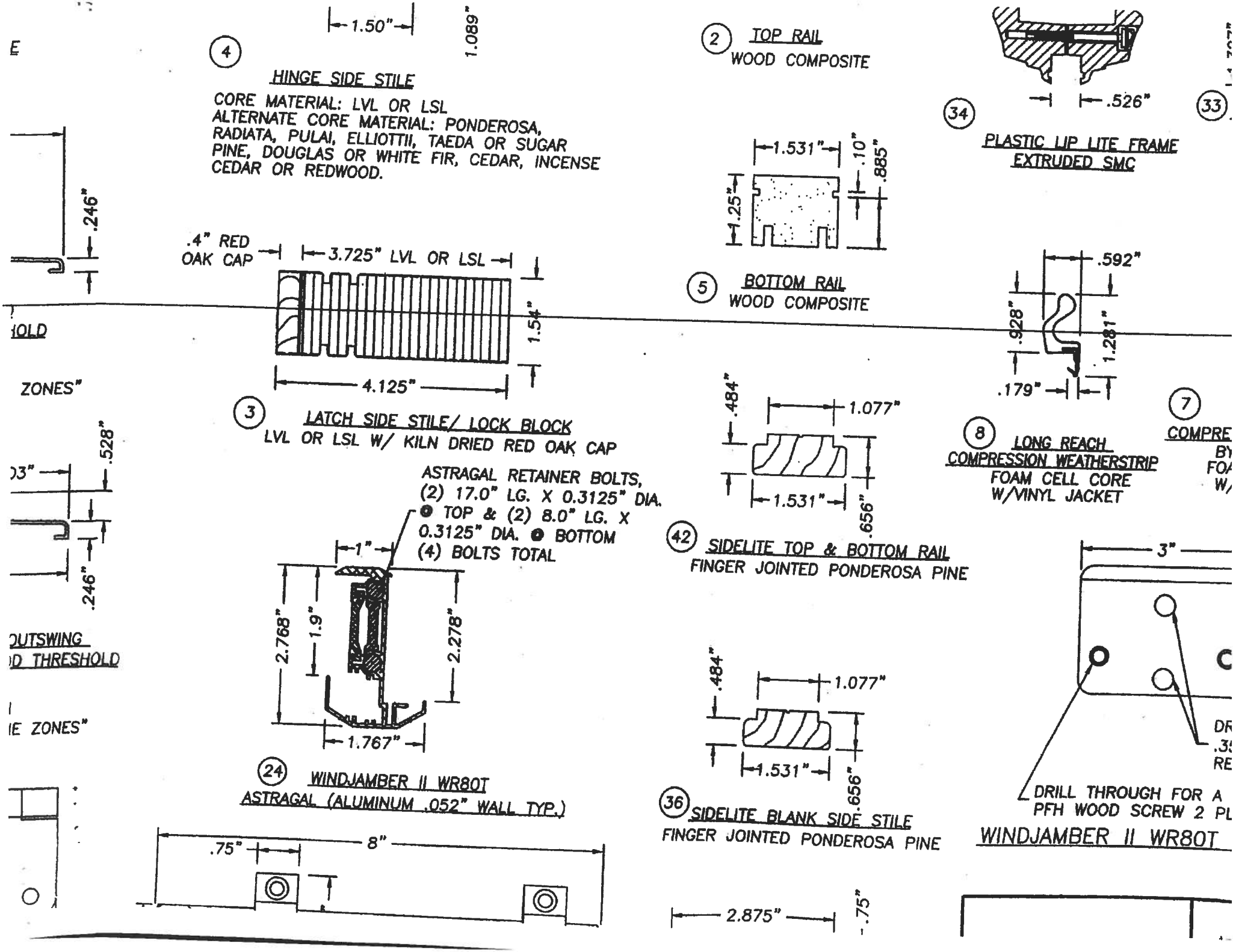
1.50"
1.089"
4
HINGE SIDE STILE
CORE MATERIAL: LVL OR LSL
ALTERNATE CORE MATERIAL: PONDEROSA, RADIATA, PULAI, ELLIOTTII, TAEDA OR SUGAR PINE, DOUGLAS OR WHITE FIR, CEDAR, INCENSE CEDAR OR REDWOOD.
2
TOP RAIL
WOOD COMPOSITE
.526"
34
PLASTIC UP LITE FRAME
EXTRUDED SMC
33
.246"
.4" RED OAK CAP
3.725" LVL OR LSL
1.54"
4.125"
3
LATCH SIDE STILE/ LOCK BLOCK
LVL OR LSL W/ KILN DRIED RED OAK CAP
1.531"
.10"
.885"
1.25"
5
BOTTOM RAIL
WOOD COMPOSITE
.592"
.928"
1.281"
.179"
8
LONG REACH
COMPRESSION WEATHERSTRIP
FOAM CELL CORE
W/VINYL JACKET
7
COMPRE
BY
FO
W/
.528"
.246"
OUTSWING
D THRESHOLD
IE ZONES"
ZONES"
ASTRAGAL RETAINER BOLTS,
(2) 17.0" LG. X 0.3125" DIA. ● TOP & (2) 8.0" LG. X 0.3125" DIA. ● BOTTOM
(4) BOLTS TOTAL
1"
2.768"
1.9"
2.278"
1.767"
24
WINDJAMBER II WR80T
ASTRAGAL (ALUMINUM .052" WALL TYP.)
.484"
1.077"
1.531"
.656"
42
SIDELITE TOP & BOTTOM RAIL
FINGER JOINTED PONDEROSA PINE
.484"
1.077"
1.531"
.656"
36
SIDELITE BLANK SIDE STILE
FINGER JOINTED PONDEROSA PINE
3"
DRILL THROUGH FOR A
PFH WOOD SCREW 2 PL
WINDJAMBER II WR80T
.75"
8"
2.875"
.75"

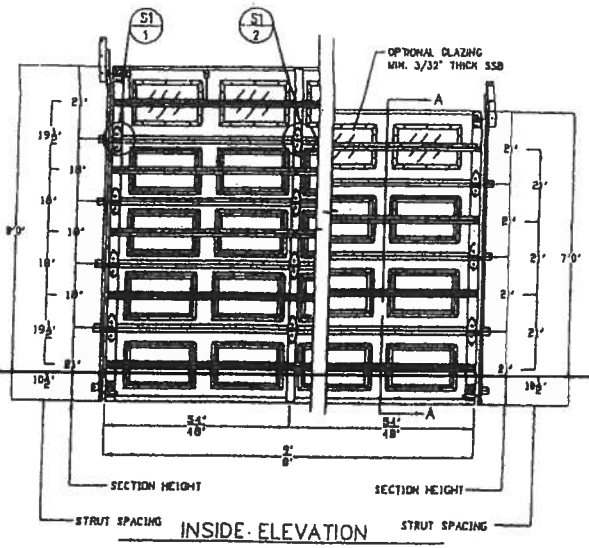

INSIDE ELEVATION

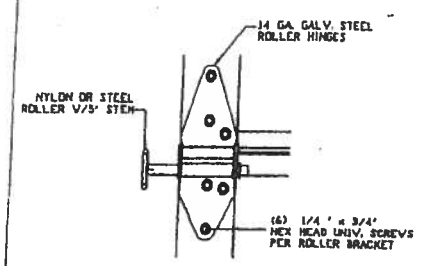

TYP. ROLLER BRACKET (S1 1)
N.T.S.

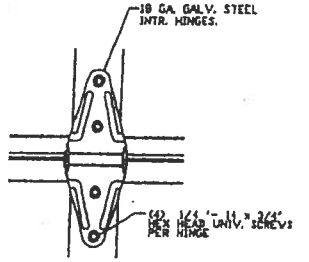

TYP. HINGE CONNECTION (S1 2)
N.T.S.

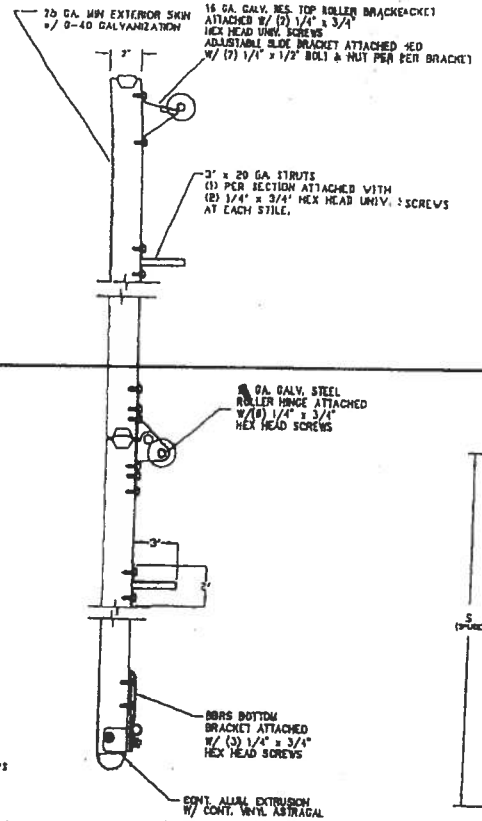

SECTION A-A (SIDE VIEW)

GLAZING OPTION CROSS SECTION

TEST No. SBC-580-011 ON OCTOBER 17, 1995 INCLUDED GLASS WINDOWS IN THE DOOR BEING USED. THE TEST PRESSURES WERE +18.4 PSF AND -54.7 PSF. BY COMPARISON, FOUR (4) WINDOWS MAY BE INSTALLED IN (1) ONE SECTION OF THE 8' X 7' AND 8' X 8' MODEL 600 AND 850 DOORS.

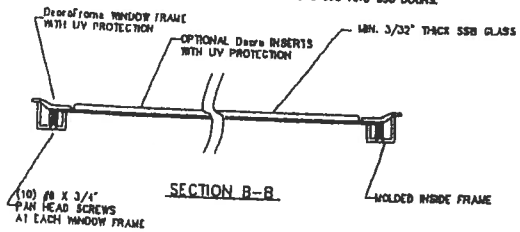

SECTION B-B

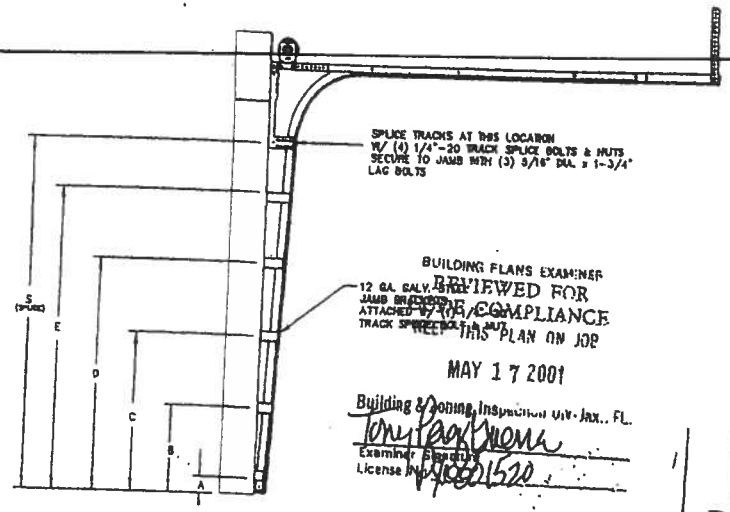

TRACK CONFIGURATION FOR 6'6" UP TO 8' TALL DOORS

BUILDING PLANS EXAMINER
REVIEWED FOR
CODE COMPLIANCE
THIS PLAN ON JOB
MAY 17 2001
Building & Zoning Inspection Div. Jax., FL.
Tony Parkhurst
Examiner Signature
License No. 0001520

4/19/01

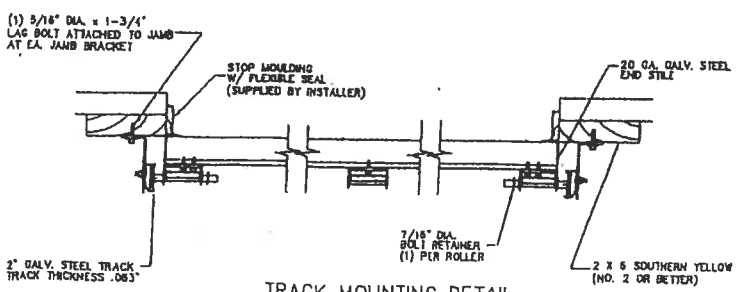

TRACK MOUNTING DETAIL

WOOD JAMB ATTACHMENT TO STRUCTURE

RATED FOR 110 MPH FASTEST-MILE BASIC WIND SPEEDS

VERTICAL JAMB ATTACHMENT TO WOOD FRAME STRUCTURE
3/16" X 3" LAG SCREWS STARTING 6" FROM ENDS THEN 24" O.C.

VERTICAL JAMB ATTACHMENT TO 2,000 PSI CONCRETE
HILTI KWIK BOLT 3/8" X 4" STARTING 6" FROM ENDS THEN 24" O.C.
HILTI SLEEVE ANCHOR 3/8" X 2-3/4" STARTING 6" FROM ENDS THEN 24" O.C.
ITW/RAMSET RCD HEAD 3/8" X 3" STARTING 6" FROM ENDS THEN 24" O.C.

VERTICAL JAMB ATTACHMENT TO C-90 BLOCK
HILTI SLEEVE ANCHOR 3/8" X 2-3/4" STARTING 6" FROM ENDS THEN 24" O.C.
ITW/RAMSET TAPCON 1/4" X 2-3/4" STARTING 6" FROM ENDS, USE PAIRS OF FASTENERS (3" APART) AT 24" O.C.

*LAGS AND BOLTS CAN BE COUNTERBORE TO PROVIDE A FLUSH MOUNTING SURFACE.
*PREPARATION OF WOOD JAMBS BY OTHERS

JAMB BRACKET LOCATIONS

	A	B	C	D	E	S
6'-6"	4"	21-1/2"	39"	57"		70"
7'-0"	4"	21-1/2"	42"	63"		76"
7'-6"	4"	18"	36"	54"	72"	82"
8'-0"	4"	21-1/2"	39"	57"	75"	88"

SPECIFICATIONS AND NOTES

1. DOORS AND HARDWARE WILL BE DESIGNED, MANUFACTURED AND INSTALLED WITH STANDARDS AS SET FORTH BY OADMA.
2. DOOR SECTIONS SHALL BE 25 GA. (.018") MIN. ROLL FORMED LIGHT COMMERCIAL QUALITY, G-40 GALVANIZATION.
3. DOORS UP TO 7'0" HIGH CONSIST OF (4) SECTIONS AS SHOWN.
4. DOORS UP TO 8'0" HIGH CONSIST OF (5) SECTIONS AS SHOWN.
5. SUPPORTING STRUCTURAL ELEMENTS SHALL BE DESIGNED BY A REGISTERED PROFESSIONAL ENGINEER FOR WIND LOADS INDICATED ON THIS DRAWING IN ADDITION TO OTHER LOADINGS.
6. THE METHOD OF TESTING WAS IN SUBSTANTIAL CONFORMANCE WITH THE PROCEDURE DESCRIBED IN ASTM E330-90, AND THE SOUTHERN BUILDING CODE SECTION 1606 WIND LOAD DESIGN CRITERIA. THE PRESSURES SHOWN ON THE DRAWINGS WERE CALCULATED USING THE FOLLOWING PARAMETERS:
   A. BASIC WIND SPEED OF 110 MPH
   B. DOOR CAN BE INSTALLED WITH 8 FEET OF DOORS WIDTH INSIDE THE EDGE STRIP.
   C. 15' MEAN ROOF HEIGHT AT ANY SLOPE
   D. USE FACTOR OF 1.0
   E. EXPOSURE RATING OF C

BASIC WIND SPEED 110 MPH
DESIGN LOADS +28.7 PSF -28.7 PSF
TEST LOADS +13.0 PSF -46.0 PSF

REV	DESCRIPTION OF REVISIONS	DATE	BY

Amarr garage doors
3000 SPRINGER DRIVE, N.W. SPRINGFIELD, MO. 65803

MODEL #600 STRATFORD
MODEL #850 HERITAGE III

SIZE	DRAWN BY	DATE	DRAWING NUMBER
B	CHECKED BY	DATE	SBC-580-00-J
SCALE: NO SCALE			SHEET 1 OF 1

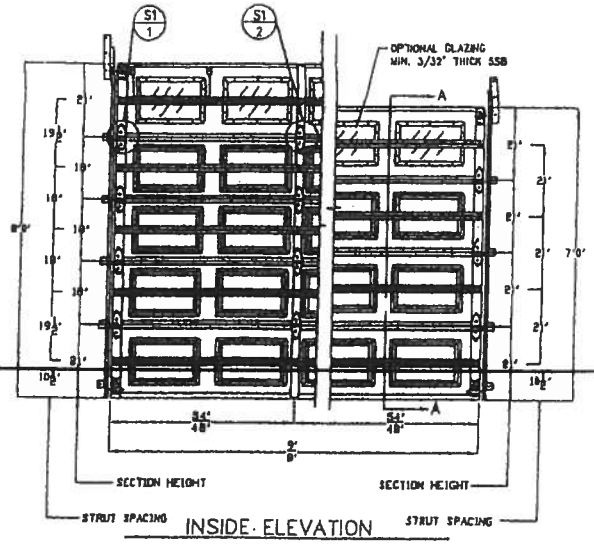

INSIDE ELEVATION

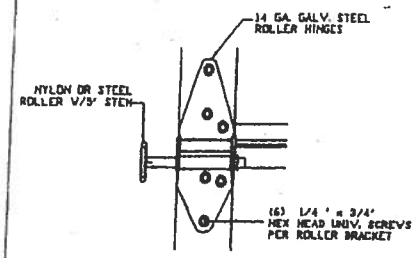

TYP. ROLLER BRACKET S1 1
N.T.S.

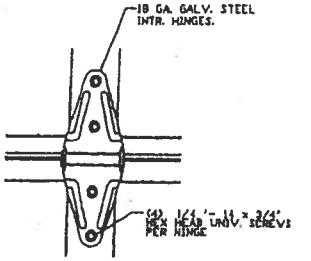

TYP. HINGE CONNECTION S1 2
N.T.S.

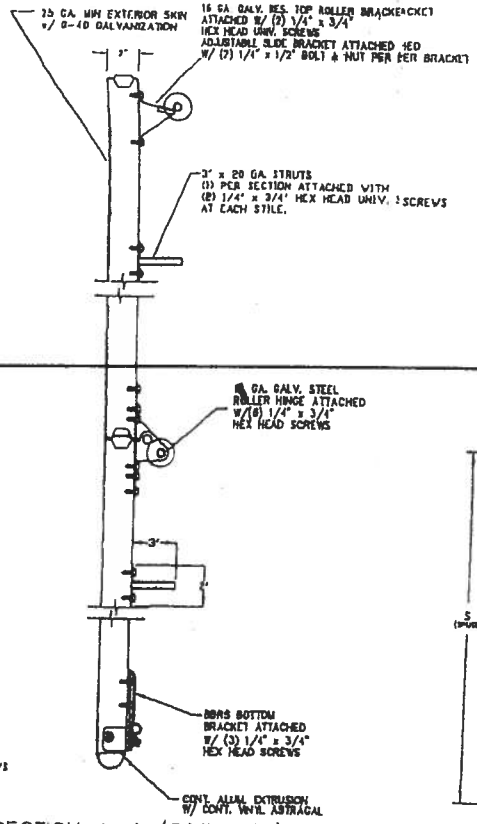

SECTION A-A (SIDE VIEW)

GLAZING OPTION CROSS SECTION

TEST No. SBC-580-011 ON OCTOBER 12, 1995 INCLUDED GLASS WINDOWS IN THE DOOR BEING USED. THE TEST PRESSURES WERE +48.4 PSF AND -54.7 PSF. BY COMPARISON, FOUR (4) WINDOWS MAY BE INSTALLED IN (1) ONE SECTION OF THE 8' X 7' AND 8' X 8' MODEL 600 AND 850 DOORS.

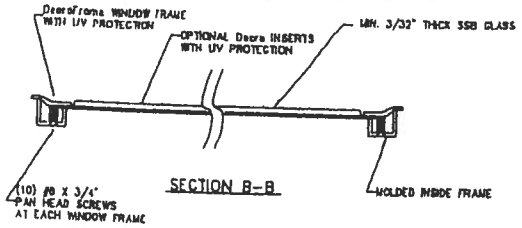

SECTION B-B

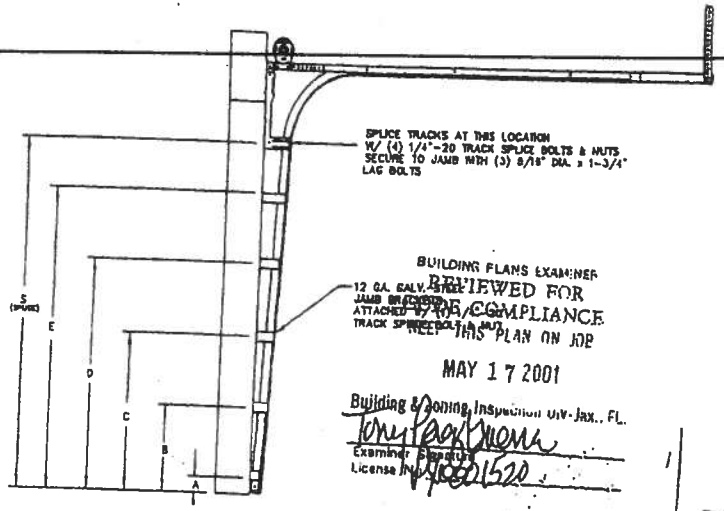

TRACK CONFIGURATION FOR 6'6" UP TO 8' TALL DOORS

BUILDING PLANS EXAMINER
REVIEWED FOR CODE COMPLIANCE
KEEP THIS PLAN ON JOB
MAY 17 2001
Building & Zoning Inspection Div. Jax., FL.
Examiner Signature
License No. 16001520

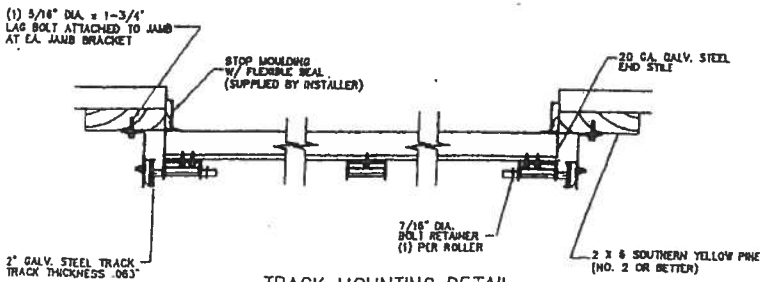

TRACK MOUNTING DETAIL

WOOD JAMB ATTACHMENT TO STRUCTURE

RATED FOR 110 MPH FASTEST-MILE BASIC WIND SPEEDS

VERTICAL JAMB ATTACHMENT TO WOOD FRAME STRUCTURE
3/16" X 3" LAG SCREWS STARTING 6" FROM ENDS THEN 24" O.C.

VERTICAL JAMB ATTACHMENT TO 2,000 PSI CONCRETE
HILTI KWIK BOLT 3/8" X 4" STARTING 6" FROM ENDS THEN 24" O.C.
HILTI SLEEVE ANCHOR 3/8" X 2-3/4" STARTING 6" FROM ENDS THEN 24" O.C.
ITW/RAMset PIN HEAD 3/8" X 3" STARTING 6" FROM ENDS THEN 24" O.C.

VERTICAL JAMB ATTACHMENT TO C-90 BLOCK
HILTI SLEEVE ANCHOR 3/8" X 2-3/4" STARTING 6" FROM ENDS THEN 24" O.C.
ITW/RAMSET TAPCON 1/4" X 2-3/4" STARTING 6" FROM ENDS, USE PAIRS OF FASTENERS (3" APART) AT 24" O.C.

*LAGS AND BOLTS CAN BE COUNTERSUNK TO PROVIDE A FLUSH MOUNTING SURFACE.
*PREPARATION OF WOOD JAMBS BY OTHERS

JAMB BRACKET LOCATIONS

	A	B	C	D	E	S
6'-6"	4"	21-1/2"	39"	57"		70"
7'-0"	4"	21-1/2"	42"	63"		76"
7'-6"	4"	18"	36"	54"	78"	82"
8'-0"	4"	21-1/2"	39"	57"	75"	88"

SPECIFICATIONS AND NOTES

1. DOORS AND HARDWARE WILL BE DESIGNED, MANUFACTURED AND INSTALLED WITH STANDARDS AS SET FORTH BY DASMA.
2. DOOR SECTIONS SHALL BE 25 GA. (.0478") MIN. ROLL FORMED UNIT COMMERCIAL QUALITY, G-40 GALVANIZED.
3. DOORS UP TO 7'6" HIGH CONSIST OF (4) SECTIONS AS SHOWN.
4. DOORS UP TO 8'8" HIGH CONSIST OF (5) SECTIONS AS SHOWN.
5. SUPPORTING STRUCTURAL ELEMENTS SHALL BE DESIGNED BY A REGISTERED PROFESSIONAL ENGINEER FOR WIND LOADS INDICATED ON THIS DRAWING IN ADDITION TO OTHER LOADINGS.
6. THE METHOD OF TESTING WAS IN SUBSTANTIAL CONFORMANCE WITH THE PROCEDURE DESCRIBED IN ASTM E330-88, AND THE SOUTHERN BUILDING CODE SECTION 1606 WIND LOAD DESIGN CRITERIA. THE PRESSURES SHOWN ON THE DRAWINGS WERE CALCULATED USING THE FOLLOWING PARAMETERS:
   A. BASIC WIND SPEED OF 110 MPH
   B. DOOR CAN BE INSTALLED WITH 6 FEET OF DOORS WITH INSIDE THE EDGE STRIP.
   C. 15' MEAN ROOF HEIGHT AT ANY SLOPE
   D. USE FACTOR OF 1.0
   E. EXPOSURE RATING OF C

MAX SIZE 8' x 8'
DESIGN LOADS 48.4 PSF -54.7 PSF
TEST LOADS +48.4 PSF -54.7 PSF

REV	DESCRIPTION OF REVISION	DATE	BY

Amarr

MODEL #600 STRATFORD
MODEL #850 HERITAGE III

SHEET	DRAWN BY	DATE	DRAWING NUMBER
8	SJ	9/9/95	SBC-580-001-J
	CHECKED BY	DATE	

SCALE: NO SCALE | SHEET 1 OF 1

4/19/01

BAILEY BISHOP
P. O. BOX 3717
LAKE CITY, FL 32056-37
FEL (386) 752-5640 FAX

Site Layout

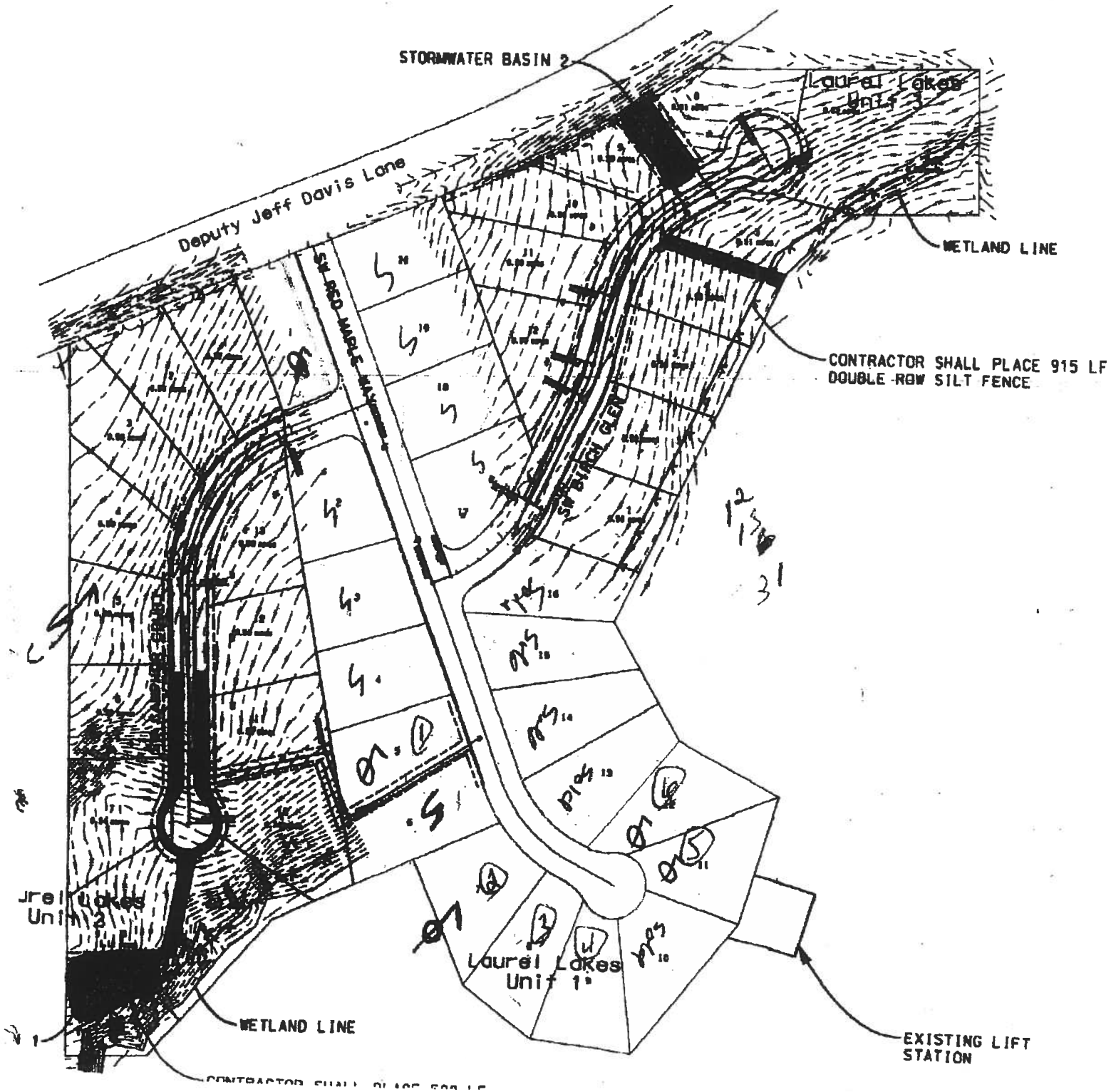

RECEIVED
DEC 22 2006

REVISIONS

MIAMI-DADE

BUILDING CODE COMPLIANCE OFFICE (BCCO)
PRODUCT CONTROL DIVISION

MIAMI-DADE COUNTY, FLORIDA
METRO-DADE FLAGLER BUILDING
140 WEST FLAGLER STREET, SUITE 1603
MIAMI, FLORIDA 33130-1563
(305) 375-2901 FAX (305) 375-2908

NOTICE OF ACCEPTANCE (NOA)

Tamko Roofing Products, Inc.
P.O. Box 1404
Joplin, MO 64802

SCOPE:

This NOA is being issued under the applicable rules and regulations governing the use of construction materials. The documentation submitted has been reviewed by Miami-Dade County Product Control Division and accepted by the Board of Rules and Appeals (BORA) to be used in Miami Dade County and other areas where allowed by the Authority Having Jurisdiction (AHJ).

This NOA shall not be valid after the expiration date stated below. The Miami-Dade County Product Control Division (In Miami Dade County) and/or the AHJ (in areas other than Miami Dade County) reserve the right to have this product or material tested for quality assurance purposes. If this product or material fails to perform in the accepted manner, the manufacturer will incur the expense of such testing and the AHJ may immediately revoke, modify, or suspend the use of such product or material within their jurisdiction. BORA reserves the right to revoke this acceptance, if it is determined by Miami-Dade County Product Control Division that this product or material fails to meet the requirements of the applicable building code.

This product is approved as described herein, and has been designed to comply with the High Velocity Hurricane Zone of the Florida Building Code.

DESCRIPTION: TAMKO Heritage Declaration & Heritage XL Roof Shingles

LABELING: Each unit shall bear a permanent label with the manufacturer's name or logo, city, state and following statement: "Miami-Dade County Product Control Approved", unless otherwise noted herein.

RENEWAL of this NOA shall be considered after a renewal application has been filed and there has been no change in the applicable building code negatively affecting the performance of this product.

TERMINATION of this NOA will occur after the expiration date or if there has been a revision or change in the materials, use, and/or manufacture of the product or process. Misuse of this NOA as an endorsement of any product, for sales, advertising or any other purposes shall automatically terminate this NOA. Failure to comply with any section of this NOA shall be cause for termination and removal of NOA.

ADVERTISEMENT: The NOA number preceded by the words Miami-Dade County, Florida, and followed by the expiration date may be displayed in advertising literature. If any portion of the NOA is displayed, then it shall be done in its entirety.

INSPECTION: A copy of this entire NOA shall be provided to the user by the manufacturer or its distributors and shall be available for inspection at the job site at the request of the Building Official.

This consists of pages 1 through 4.
The submitted documentation was reviewed by Frank Zuloaga, RRC

ROOFING ASSEMBLY APPROVAL

Category:	Roofing
Sub-Category:	07310 Composition Shingles
Materials	Dimensional
Deck Type:	Wood

1. SCOPE:

This approves **Tamko Heritage Declaration and Heritage XL** Asphalt Shingles, manufactured by **Tamko Roofing Products, Inc.** as described in this Notice of Acceptance.

2. PRODUCT DESCRIPTION

Product	Dimensions	Test Specifications	Product Description
Heritage Declaration & Heritage XL	12" x 36"	TAS 110	A heavy weight dimensional asphalt shingle.

3. EVIDENCE SUBMITTED:

Test Agency	Test Identifier	Test Name/Report	Date
PRI Asphalt Technologies, Inc.	TAS 100	TAP-066-02-01	01/09/03
		TAP-073-02-01	05/20/03
Underwriters Laboratories, Inc.	ASTM D 3462	R2919	06/12/03
Underwriters Laboratories, Inc.	TAS 107	03CA08442	06/12/03

4. LIMITATIONS

4.1 Fire classification is not part of this acceptance; refer to a current Approved Roofing Materials Directory for fire ratings of this product.

4.2 Shall not be installed on roof mean heights in excess of 33 ft.

4.3 All products listed herein shall have a quality assurance audit in accordance with the Florida Building Code and Rule 9B-72 of the Florida Administrative Code.

5. INSTALLATION

5.1 Shingles shall be installed in accordance with Roofing Application Standard RAS 115.

5.2 The manufacturer shall provide clearly written application instructions.

5.3 Exposure and course layout shall be in compliance with Detail 'A', attached.

5.4 Nailing shall be in compliance with Detail 'B', attached.

6. LABELING

5.1 Shingles shall be labeled with the Miami-Dade Logo or the wording "Miami-Dade County-Product Control Approved".

7. BUILDING PERMIT REQUIREMENTS

7.1 Application for building permit shall be accompanied by copies of the following:

7.1.1 This Notice of Acceptance.

7.1.2 Any other documents required by the Building Official or the applicable Building Code in order to properly evaluate the installation of this system.

DETAIL A

HERITAGE DECLARATION & XL

All dimensions are in inches.

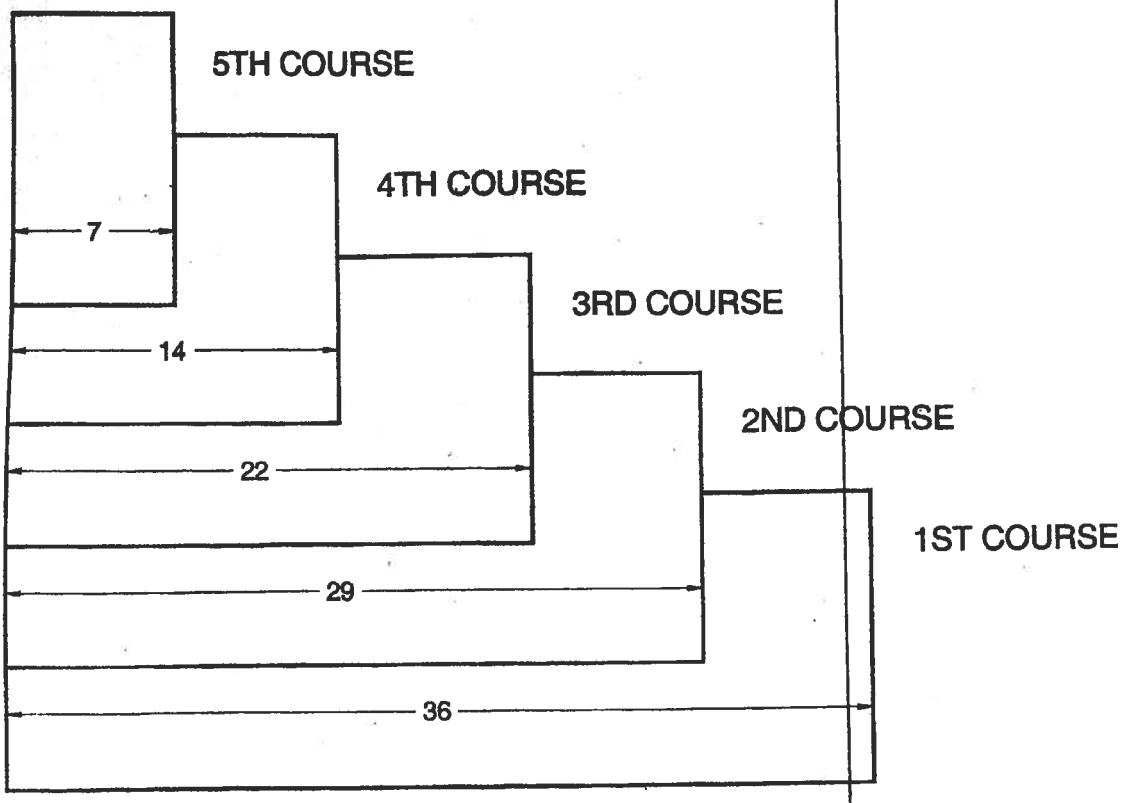

DETAIL B

HERITAGE DECLARATION

12" x 36" LAMINATED SHINGLE
All dimensions are in inches.

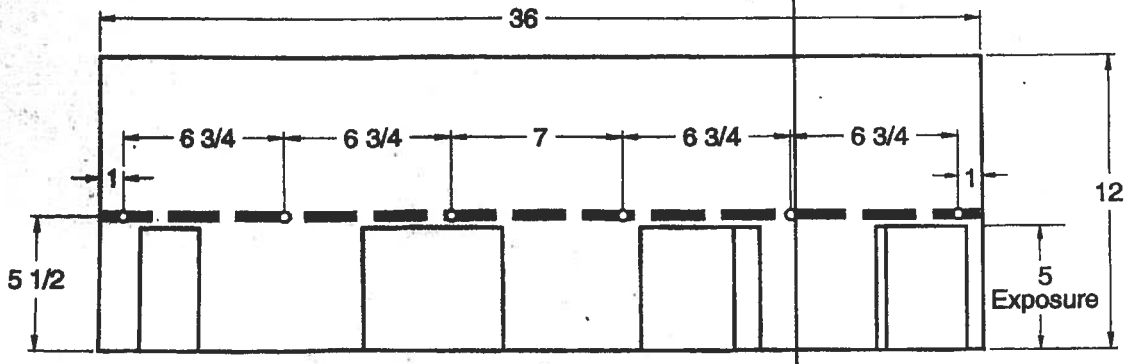

HERITAGE XL

12" x 36" LAMINATED SHINGLE
All dimensions are in inches.

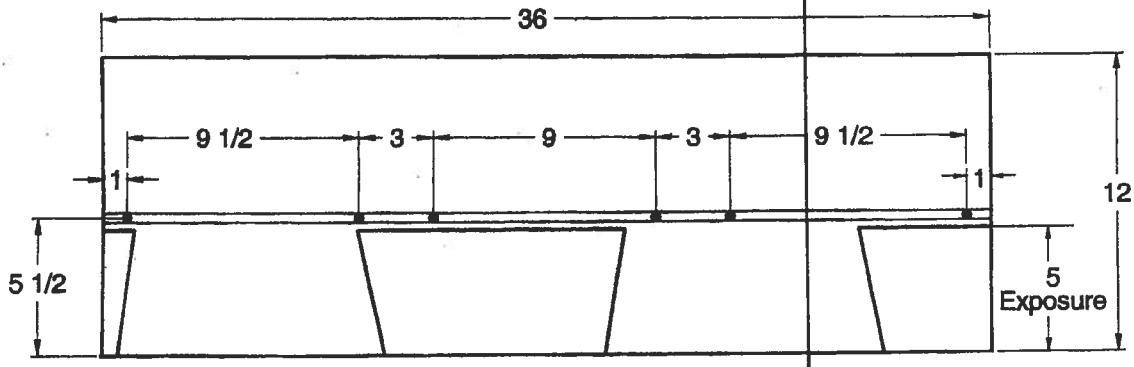

END OF THIS ACCEPTANCE

Project Summary
Entire House
Glenn I. Jones, Inc.

Job: LL ph2 lot 4
Date:
By: Louis Weeks

552 NW Hilton Ave., Lake City, FL 32055 Phone: 386-752-5389 Fax: 386-755-3401 Email: louis@bizsea.rr.com Web: www.GlennIJonesInc.com

Project Information

For: Laural Lakes ph2 lot 4

Notes:

Design Information

Weather: Gainesville, FL, US

Winter Design Conditions

Outside db	33	°F
Inside db	70	°F
Design TD	37	°F

Summer Design Conditions

Outside db	92	°F
Inside db	75	°F
Design TD	17	°F
Daily range	M	
Relative humidity	50	%
Moisture difference	52	gr/lb

Heating Summary

Structure	29476	Btuh
Ducts	1474	Btuh
Central vent (0 cfm)	0	Btuh
Humidification	0	Btuh
Piping	0	Btuh
Equipment load	30950	Btuh

Sensible Cooling Equipment Load Sizing

Structure	21664	Btuh
Ducts	2166	Btuh
Central vent (0 cfm)	0	Btuh
Blower	0	Btuh
Use manufacturer's data	n	
Rate/swing multiplier	0.97	
Equipment sensible load	23115	Btuh

Infiltration

Method	Simplified
Construction quality	Average
Fireplaces	0

	Heating	Cooling
Area (ft²)	1959	1959
Volume (ft³)	19592	19592
Air changes/hour	0.80	0.40
Equiv. AVF (cfm)	261	131

Latent Cooling Equipment Load Sizing

Structure	5959	Btuh
Ducts	0	Btuh
Central vent (0 cfm)	0	Btuh
Equipment latent load	5959	Btuh
Equipment total load	29074	Btuh
Req. total capacity at 0.70 SHR	2.8	ton

Heating Equipment Summary

Make	Carrier
Trade	Model 38EYG Heat Pump w/Puron
Model	38EYG03650

Efficiency	8.5	HSPF
Heating input		
Heating output	36400	Btuh @ 47°F
Temperature rise	28	°F
Actual air flow	1167	cfm
Air flow factor	0.038	cfm/Btuh
Static pressure	0.50	in H2O
Space thermostat		

Cooling Equipment Summary

Make	Carrier
Trade	Model 38EYG Heat Pump w/Puron
Cond	38EYG03650
Coil	FK4DNF005+PURON-TXV

Efficiency	14	EER
Sensible cooling	24500	Btuh
Latent cooling	10500	Btuh
Total cooling	35000	Btuh
Actual air flow	1167	cfm
Air flow factor	0.049	cfm/Btuh
Static pressure	0.50	in H2O
Load sensible heat ratio	0.80	

Printout certified by ACCA to meet all requirements of Manual J 7th Ed.

FORM 600A-2004

EnergyGauge® 4.21

FLORIDA ENERGY EFFICIENCY CODE FOR BUILDING CONSTRUCTION

Florida Department of Community Affairs

Residential Whole Building Performance Method A

Project Name:	**LL ph2 lot 4**	Builder:	**Glenn I. Jones, Inc.**
Address:		Permitting Office:	
City, State:	;	Permit Number:	
Owner:	**Laural Lakes ph2 lot 4**	Jurisdiction Number:	
Climate Zone:	**North**		

1. New construction or existing	New	
2. Single family or multi-family	Single family	
3. Number of units, if multi-family	1	
4. Number of Bedrooms	3	
5. Is this a worst case?	Yes	
6. Conditioned floor area (ft²)	1959 ft²	
7. Glass type[1] and area: (Label reqd. by 13-104.4.5 if not default)		
a. U-factor: (or Single or Double DEFAULT)	Description Area 7a. (Dble, U=0.6) 55.0 ft²	
b. SHGC: (or Clear or Tint DEFAULT)	7b. (Clear) 212.0 ft²	
8. Floor types		
a. Slab-On-Grade Edge Insulation	R=0.0, 0.0(p) ft	
b. N/A		
c. N/A		
9. Wall types		
a. Frame, Wood, Exterior	R=11.0, 1600.3 ft²	
b. Frame, Wood, Adjacent	R=11.0, 320.0 ft²	
c. N/A		
d. N/A		
e. N/A		
10. Ceiling types		
a. Under Attic	R=30.0, 1959.0 ft²	
b. N/A		
c. N/A		
11. Ducts		
a. Sup: Unc. Ret: Unc. AH(Sealed):Interior	Sup. R=6.0, 162.0 ft	
b. N/A		
12. Cooling systems		
a. Central Unit	Cap: 35.0 kBtu/hr SEER: 14.00	
b. N/A		
c. N/A		
13. Heating systems		
a. Electric Heat Pump	Cap: 36.0 kBtu/hr HSPF: 8.50	
b. N/A		
c. N/A		
14. Hot water systems		
a. Electric Resistance	Cap: 40.0 gallons EF: 0.92	
b. N/A		
c. Conservation credits (HR-Heat recovery, Solar DHP-Dedicated heat pump)		
15. HVAC credits (CF-Ceiling fan, CV-Cross ventilation, HF-Whole house fan, PT-Programmable Thermostat, MZ-C-Multizone cooling, MZ-H-Multizone heating)		

Glass/Floor Area: 0.11

Total as-built points: 22321

Total base points: 31352

PASS

I hereby certify that the plans and specifications covered by this calculation are in compliance with the Florida Energy Code.

PREPARED BY: Louis E. Weeks

DATE: 1-2-07

I hereby certify that this building, as designed, is in compliance with the Florida Energy Code.

OWNER/AGENT: _____

DATE: _____

Review of the plans and specifications covered by this calculation indicates compliance with the Florida Energy Code. Before construction is completed this building will be inspected for compliance with Section 553.908 Florida Statutes.

BUILDING OFFICIAL: _____

DATE: _____

1 Predominant glass type. For actual glass type and areas, see Summer & Winter Glass output on pages 2&4.

SUMMER CALCULATIONS

Residential Whole Building Performance Method A - Details

ADDRESS: , , ,

PERMIT #:

BASE

GLASS TYPES

.18 X	Conditioned Floor Area	X BSPM	= Points
.18	1959.0	20.04	7066.5

WALL TYPES

	Area	X BSPM	= Points
Exterior	1600.3	1.70	2720.5
Adjacent	320.0	0.70	224.0
Base Total:	**1920.3**		**2944.5**

DOOR TYPES

	Area	X BSPM	= Points
Exterior	21.0	4.10	86.1
Adjacent	0.0	0.00	0.0
Base Total:	**21.0**		**86.1**

CEILING TYPES

	Area	X BSPM	= Points
Under Attic	1959.0	1.73	3389.1
Base Total:	**1959.0**		**3389.1**

FLOOR TYPES

	Area	X BSPM	= Points
Slab	183.3(p)	-37.0	0.0
Raised	0.0	0.00	0.0
Base Total:			**0.0**

INFILTRATION

Area	X BSPM	= Points
1959.0	10.21	20001.4

AS-BUILT

Type/SC	Overhang Ornt	Len	Hgt	Area	X SPM	X SOF	= Points
Double,U=0.61,Clear	E	1.5	8.0	28.0	43.20	0.96	1156.0
Double,U=0.61,Clear	E	6.0	6.0	10.0	43.20	0.52	223.7
Double,U=0.61,Clear	E	1.5	6.0	20.0	43.20	0.91	788.6
Double,U=0.61,Clear	N	1.5	6.0	35.0	20.46	0.94	672.3
Double,U=0.61,Clear	W	1.5	6.0	55.0	39.69	0.91	1993.9
Double,U=0.52,Clear	W	6.0	6.0	25.0	40.18	0.53	532.7
Double,U=0.61,Clear	S	1.5	6.0	15.0	37.01	0.86	475.4
Double,U=0.61,Clear	S	1.5	4.0	9.0	37.01	0.74	245.6
Double,U=0.61,Clear	N	5.0	6.0	15.0	20.46	0.74	226.6
As-Built Total:				**212.0**			**6314.8**

Type	R-Value	Area	X SPM	= Points
Frame, Wood, Exterior	11.0	1600.3	1.70	2720.5
Frame, Wood, Adjacent	11.0	320.0	0.70	224.0
As-Built Total:		**1920.3**		**2944.5**

Type	Area	X SPM	= Points
Exterior Wood	21.0	6.10	128.1
As-Built Total:	**21.0**		**128.1**

Type	R-Value	Area	X SPM X SCM	= Points
Under Attic	30.0	1959.0	1.73 X 1.00	3389.1
As-Built Total:		**1959.0**		**3389.1**

Type	R-Value	Area	X SPM	= Points
Slab-On-Grade Edge Insulation	0.0	183.3(p	-41.20	0.0
As-Built Total:		**0.0**		**0.0**

Area	X SPM	= Points
1959.0	10.21	20001.4

SUMMER CALCULATIONS

Residential Whole Building Performance Method A - Details

ADDRESS: , , , PERMIT #:

BASE				AS-BUILT							
Summer Base Points: 33487.6				**Summer As-Built Points:**							**32777.9**
Total Summer Points	X System Multiplier	= Cooling Points		Total Component (System - Points)	X Cap Ratio	X Duct Multiplier (DM x DSM x AHU)	X System Multiplier	X Credit Multiplier	= Cooling Points		
				(sys 1: Central Unit 35000 btuh ,SEER/EFF(14.0) Ducts:Unc(S),Unc(R),Int(AH),R6.0(INS)							
33487.6	**0.4266**	**14285.8**		32778 **32777.9**	1.00 **1.00**	(1.09 x 1.147 x 0.86) **1.081**	0.244 **0.244**	1.000 **1.000**	8636.6 **8636.6**		

WINTER CALCULATIONS

Residential Whole Building Performance Method A - Details

ADDRESS: , , ,

PERMIT #:

BASE

GLASS TYPES .18 X Conditioned Floor Area	X BWPM	= Points
.18 1959.0	12.74	4492.4

WALL TYPES	Area X BWPM	= Points
Exterior 1600.3	3.70	5921.1
Adjacent 320.0	3.60	1152.0
Base Total: 1920.3		7073.1

DOOR TYPES	Area X BWPM	= Points
Exterior 21.0	8.40	176.4
Adjacent 0.0	0.00	0.0
Base Total: 21.0		176.4

CEILING TYPES	Area X BWPM	= Points
Under Attic 1959.0	2.05	4015.9
Base Total: 1959.0		4015.9

FLOOR TYPES	Area X BWPM	= Points
Slab 183.3(p)	8.9	0.0
Raised 0.0	0.00	0.0
Base Total:		0.0

INFILTRATION	Area X BWPM	= Points
1959.0	-0.59	-1155.8

AS-BUILT

Type/SC	Overhang Ornt	Len	Hgt	Area X	WPM X	WOF =	Points
Double,U=0.61,Clear	E	1.5	8.0	28.0	11.68	1.02	333.8
Double,U=0.61,Clear	E	6.0	6.0	10.0	11.68	1.29	150.2
Double,U=0.61,Clear	E	1.5	6.0	20.0	11.68	1.04	241.9
Double,U=0.61,Clear	N	1.5	6.0	35.0	17.34	1.00	608.3
Double,U=0.61,Clear	W	1.5	6.0	55.0	13.51	1.02	760.7
Double,U=0.52,Clear	W	6.0	6.0	25.0	10.85	1.17	316.4
Double,U=0.61,Clear	S	1.5	6.0	15.0	6.22	1.12	104.3
Double,U=0.61,Clear	S	1.5	4.0	9.0	6.22	1.35	75.8
Double,U=0.61,Clear	N	5.0	6.0	15.0	17.34	1.02	264.3
As-Built Total:				212.0			2855.8

Type	R-Value	Area X	WPM	= Points
Frame, Wood, Exterior	11.0	1600.3	3.70	5921.1
Frame, Wood, Adjacent	11.0	320.0	3.60	1152.0
As-Built Total:		1920.3		7073.1

Type	Area X	WPM	= Points
Exterior Wood	21.0	12.30	258.3
As-Built Total:	21.0		258.3

Type	R-Value	Area X	WPM X WCM =	Points
Under Attic	30.0	1959.0	2.05 X 1.00	4015.9
As-Built Total:		1959.0		4015.9

Type	R-Value	Area X	WPM	= Points
Slab-On-Grade Edge Insulation	0.0	183.3(p	18.80	0.0
As-Built Total:		0.0		0.0

Area X	WPM	= Points
1959.0	-0.59	-1155.8

WINTER CALCULATIONS

Residential Whole Building Performance Method A - Details

ADDRESS: , , ,

PERMIT #:

BASE				AS-BUILT							
Winter Base Points:			**14602.0**	**Winter As-Built Points:**							**13047.4**
Total Winter Points	X	System Multiplier	= Heating Points	Total Component (System - Points)	X	Cap Ratio	X Duct Multiplier (DM x DSM x AHU)	X System Multiplier	X Credit Multiplier	=	Heating Points
				(sys 1: Electric Heat Pump 36000 btuh ,EFF(8.5) Ducts:Unc(S),Unc(R),Int(AH),R6.0							
14602.0		**0.6274**	**9161.3**	13047.4 **13047.4**		1.000 **1.00**	(1.069 x 1.169 x 0.88) **1.104**	0.401 **0.401**	1.000 **1.000**		5779.1 **5779.1**

WATER HEATING & CODE COMPLIANCE STATUS

Residential Whole Building Performance Method A - Details

ADDRESS: , , ,

PERMIT #:

BASE					AS-BUILT							
WATER HEATING												
Number of Bedrooms	X	Multiplier	=	Total	Tank Volume	EF	Number of Bedrooms	X	Tank Ratio	X	Multiplier	X	Credit Multiplier	=	Total
3		2635.00		7905.0	40.0	0.92	3		1.00		2635.00		1.00		7905.0
					As-Built Total:										**7905.0**

CODE COMPLIANCE STATUS

BASE							AS-BUILT						
Cooling Points	+	Heating Points	+	Hot Water Points	=	Total Points	Cooling Points	+	Heating Points	+	Hot Water Points	=	Total Points
14286		**9161**		**7905**		**31352**	**8637**		**5779**		**7905**		**22321**

PASS

Code Compliance Checklist

Residential Whole Building Performance Method A - Details

ADDRESS: , , ,

PERMIT #:

6A-21 INFILTRATION REDUCTION COMPLIANCE CHECKLIST

COMPONENTS	SECTION	REQUIREMENTS FOR EACH PRACTICE	CHECK
Exterior Windows & Doors	606.1.ABC.1.1	Maximum:.3 cfm/sq.ft. window area; .5 cfm/sq.ft. door area.	
Exterior & Adjacent Walls	606.1.ABC.1.2.1	Caulk, gasket, weatherstrip or seal between: windows/doors & frames, surrounding wall; foundation & wall sole or sill plate; joints between exterior wall panels at corners; utility penetrations; between wall panels & top/bottom plates; between walls and floor. EXCEPTION: Frame walls where a continuous infiltration barrier is installed that extends from, and is sealed to, the foundation to the top plate.	
Floors	606.1.ABC.1.2.2	Penetrations/openings >1/8" sealed unless backed by truss or joint members. EXCEPTION: Frame floors where a continuous infiltration barrier is installed that is sealed to the perimeter, penetrations and seams.	
Ceilings	606.1.ABC.1.2.3	Between walls & ceilings; penetrations of ceiling plane of top floor; around shafts, chases, soffits, chimneys, cabinets sealed to continuous air barrier; gaps in gyp board & top plate; attic access. EXCEPTION: Frame ceilings where a continuous infiltration barrier is installed that is sealed at the perimeter, at penetrations and seams.	
Recessed Lighting Fixtures	606.1.ABC.1.2.4	Type IC rated with no penetrations, sealed; or Type IC or non-IC rated, installed inside a sealed box with 1/2" clearance & 3" from insulation; or Type IC rated with < 2.0 cfm from conditioned space, tested.	
Multi-story Houses	606.1.ABC.1.2.5	Air barrier on perimeter of floor cavity between floors.	
Additional Infiltration reqts	606.1.ABC.1.3	Exhaust fans vented to outdoors, dampers; combustion space heaters comply with NFPA, have combustion air.	

6A-22 OTHER PRESCRIPTIVE MEASURES (must be met or exceeded by all residences.)

COMPONENTS	SECTION	REQUIREMENTS	CHECK
Water Heaters	612.1	Comply with efficiency requirements in Table 612.1.ABC.3.2. Switch or clearly marked cir breaker (electric) or cutoff (gas) must be provided. External or built-in heat trap required.	
Swimming Pools & Spas	612.1	Spas & heated pools must have covers (except solar heated). Non-commercial pools must have a pump timer. Gas spa & pool heaters must have a minimum thermal efficiency of 78%.	
Shower heads	612.1	Water flow must be restricted to no more than 2.5 gallons per minute at 80 PSIG.	
Air Distribution Systems	610.1	All ducts, fittings, mechanical equipment and plenum chambers shall be mechanically attached, sealed, insulated, and installed in accordance with the criteria of Section 610. Ducts in unconditioned attics: R-6 min. insulation.	
HVAC Controls	607.1	Separate readily accessible manual or automatic thermostat for each system.	
Insulation	604.1, 602.1	Ceilings-Min. R-19. Common walls-Frame R-11 or CBS R-3 both sides. Common ceiling & floors R-11.	

ENERGY PERFORMANCE LEVEL (EPL) DISPLAY CARD

ESTIMATED ENERGY PERFORMANCE SCORE* = 88.1

The higher the score, the more efficient the home.

Laural Lakes ph2 lot 4, , , ,

1. New construction or existing	New	
2. Single family or multi-family	Single family	
3. Number of units, if multi-family	1	
4. Number of Bedrooms	3	
5. Is this a worst case?	Yes	
6. Conditioned floor area (ft²)	1959 ft²	
7. Glass type[1] and area: (Label reqd. by 13-104.4.5 if not default)		
a. U-factor: (or Single or Double DEFAULT)	Description Area	
	7a. (Dble, U=0.6) 55.0 ft²	
b. SHGC: (or Clear or Tint DEFAULT)	7b. (Clear) 212.0 ft²	
8. Floor types		
a. Slab-On-Grade Edge Insulation	R=0.0, 0.0(p) ft	
b. N/A		
c. N/A		
9. Wall types		
a. Frame, Wood, Exterior	R=11.0, 1600.3 ft²	
b. Frame, Wood, Adjacent	R=11.0, 320.0 ft²	
c. N/A		
d. N/A		
e. N/A		
10. Ceiling types		
a. Under Attic	R=30.0, 1959.0 ft²	
b. N/A		
c. N/A		
11. Ducts		
a. Sup: Unc. Ret: Unc. AH(Sealed):Interior	Sup. R=6.0, 162.0 ft	
b. N/A		

12. Cooling systems		
a. Central Unit	Cap: 35.0 kBtu/hr	
	SEER: 14.00	
b. N/A		
c. N/A		
13. Heating systems		
a. Electric Heat Pump	Cap: 36.0 kBtu/hr	
	HSPF: 8.50	
b. N/A		
c. N/A		
14. Hot water systems		
a. Electric Resistance	Cap: 40.0 gallons	
	EF: 0.92	
b. N/A		
c. Conservation credits (HR-Heat recovery, Solar DHP-Dedicated heat pump)		
15. HVAC credits (CF-Ceiling fan, CV-Cross ventilation, HF-Whole house fan, PT-Programmable Thermostat, MZ-C-Multizone cooling, MZ-H-Multizone heating)		

I certify that this home has complied with the Florida Energy Efficiency Code For Building Construction through the above energy saving features which will be installed (or exceeded) in this home before final inspection. Otherwise, a new EPL Display Card will be completed based on installed Code compliant features.

Builder Signature: _____ Date: _____

Address of New Home: _____ City/FL Zip: _____

**NOTE: The home's estimated energy performance score is only available through the FLA/RES computer program. This is not a Building Energy Rating. If your score is 80 or greater (or 86 for a US EPA/DOE EnergyStar™ designation), your home may qualify for energy efficiency mortgage (EEM) incentives if you obtain a Florida Energy Gauge Rating. Contact the Energy Gauge Hotline at 321/638-1492 or see the Energy Gauge web site at www.fsec.ucf.edu for information and a list of certified Raters. For information about Florida's Energy Efficiency Code For Building Construction, contact the Department of Community Affairs at 850/487-1824.*

[1] Predominant glass type. For actual glass type and areas, see Summer & Winter Glass output on pages 2&4.

EnergyGauge® (Version: FLRCSB v4.21)