DECAL ☑ SERIAL ☐

PERMIT APPLICATION / MANUFACTURED HOME INSTALLATION APPLICATION

For Office Use Only (Revised 7-1-15) Zoning Official LN Building Official [illegible]

AP# 1901-53 Date Received 1/16 By JW Permit # 37680

Flood Zone X Development Permit _____ Zoning A3 Land Use Plan Map Category A

Comments Replacing existing M/H

FEMA Map# _____ Elevation _____ Finished Floor 1' above road River _____ In Floodway _____

☑ Recorded Deed or ☑ Property Appraiser PO ☑ Site Plan ☑ EH # 19-0001 ☐ Well letter OR

☑ Existing well ☐ Land Owner Affidavit ☑ Installer Authorization ☐ FW Comp. letter ☑ App Fee Paid

☐ DOT Approval ☐ Parent Parcel # _____ ☐ STUP-MH _____ ☑ 911 App

☐ Ellisville Water Sys ☑ Assessment PL ☐ Out County ☐ In County ☑ Sub VF Form SHEET ATTACHED

Property ID # 10-6S-16-03815-143 Subdivision CARDINAL FARMS Lot# 43

- New Mobile Home ✓ Used Mobile Home _____ MH Size 28 x 60 Year 2019
- Applicant CHERIE Howington Phone # 813 650 5024
- Address 1212 Camarosa Ln, Plant City, FL 33563
- Name of Property Owner FRANK P Boykin Phone# 813 650 5024
- 911 Address 1983 SW Skyline Lp Fort White, FL 32038
- Circle the correct power company - FL Power & Light - Clay Electric
  (Circle One) - Suwannee Valley Electric - Duke Energy
- Name of Owner of Mobile Home FRANK P. Boykin Phone # 813 650 5024
  Address 806 SW Lauman Gln Fort White, FL 32038
- Relationship to Property Owner Self
- Current Number of Dwellings on Property 1
- Lot Size 9.37 Total Acreage 9.37
- Do you : Have Existing Drive (Currently using) or Private Drive (Blue Road Sign) or need Culvert Permit (Putting in a Culvert) or Culvert Waiver (Not existing but do not need a Culvert) (Circle one)
- Is this Mobile Home Replacing an Existing Mobile Home Replacing
- Driving Directions to the Property 47-S to Herlong TL to 1st Skyline Loop, TR, 1st Lt ON R.
- Name of Licensed Dealer/Installer Jeff Wagner Phone # 813 650 5024
- Installers Address 3102 Jap Tucker Rd Plant City FL 33563
- License Number IH1025438 Installation Decal # 58539

OK 3810
375.00

JW SENT EMAIL 1.16.19 + 1.17.19 JW SPOKE W/ CHERIE 1.23.19
JW LEFT MSG for CHERIE 1.23.19 " " " " 1.24.19

PERMIT WORKSHEET

PERMIT NUMBER

Installer: Jeffrey C. Wagner License #: IH10251438

Address of home being installed: 806 SW Lauman Gin

Manufacturer: Redman Length x width: 28 x 60

NOTE: If home is a single wide fill out one half of the blocking plan. If home is a triple or quad wide sketch in remainder of home.

I understand Lateral Arm Systems cannot be used on any home (new or used) where the sidewall ties exceed 5 ft 4 in.

Installer's Initials: [signature]

New Home ☑ Used Home ☐

Home installed to the Manufacturer's Installation Manual ☑

Home is installed in accordance with Rule 15-C ☑

Single wide ☐ Wind Zone II ☐ Wind Zone III ☐

Double wide ☑ Installation Decal #: 58539

Triple/Quad ☐ Serial #:

Roof System: ____ Typical ____ Hinged

Typical pier spacing: 2' 6'

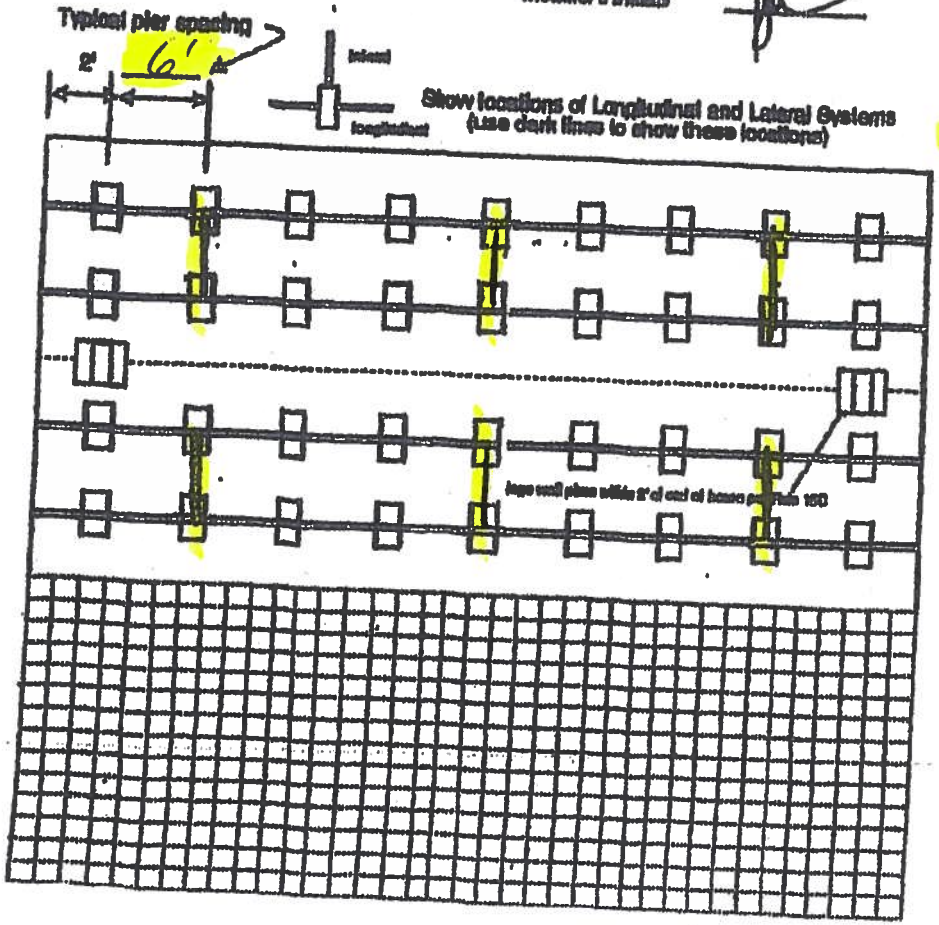

PIER SPACING TABLE FOR USED HOMES

Load bearing capacity	Footer size (sq in)	16" x 16" (256)	18 1/2" x 18 1/2" (342)	20" x 20" (400)	22" x 22" (484)*	24" X 24" (576)*	26" x 26" (676)
1000 psf		3'	4'	5'	6'	7'	8'
1500 psf		4' 6"	5'	7'	8'	8'	8'
2000 psf		5'	6'	8'	8'	8'	8'
2500 psf		7' 6"	8'	8'	8'	8'	8'
3000 psf		8'	8'	8'	8'	8'	8'
3500 psf		8'	8'	8'	8'	8'	8'

* Interpolated from Rule 15C-1 pier spacing table.

PIER PAD SIZES

I-beam pier pad size: 17 1/2 x 22 1/2'

Perimeter pier pad size: 16" x 16"

Other pier pad sizes (required by the mfg.): ____

Draw the approximate locations of marriage wall openings 4 foot or greater. Use this symbol to show the piers.

List all marriage wall openings greater than 4 foot and their pier pad sizes below.

Opening	Pier pad size
10'	17 1/2' x 22 1/2'
8'	17 1/2' x 22 1/2'

POPULAR PAD SIZES

Pad Size	Sq in
16 x 16	256
16 x 16	256
18.5 x 18.5	342
16 x 22.5	360
17 x 22	374
18 1/4 x 25 1/4	348
20 x 20	400
17 3/16 x 25 3/16	441
17 1/2 x 25 1/2	445
24 x 24	576
26 x 26	676

ANCHORS

4 ft ✓ 5 ft ____

FRAME TIES

within 2' of end of home spaced at 5' 4" oc ____

TIEDOWN COMPONENTS

Longitudinal Stabilizing Device (LSD)
Manufacturer: OLIVER

Longitudinal Stabilizing Device w/ Lateral Arms
Manufacturer: OLIVER

OTHER TIES

	Number
Sidewall	
Longitudinal	6
Marriage wall	
Shearwall	

PERMIT NUMBER _____

PERMIT WORKSHEET

POCKET PENETROMETER TEST

The pocket penetrometer tests are rounded down to _____ psf or check here to declare 1000 lb. soil _____ without testing.

x 2000 x 2000 x 1500

POCKET PENETROMETER TESTING METHOD

1. Test the perimeter of the home at 6 locations.
2. Take the reading at the depth of the footer.
3. Using 500 lb. increments, take the lowest reading and round down to that increment.

x 2000 x 2000 x 1500

TORQUE PROBE TEST

The results of the torque probe test is 305 inch pounds or check here if you are declaring 5' anchors without testing _____. A test showing 275 inch pounds or less will require 5 foot anchors.

Note: A state approved lateral arm system is being used and 4 ft. anchors are allowed at the sidewall locations. I understand 5 ft anchors are required at all centerline tie points where the torque test reading is 275 or less and where the mobile home manufacturer may requires anchors with 4000 lb holding capacity.

[signature] Installer's initials

ALL TESTS MUST BE PERFORMED BY A LICENSED INSTALLER

Installer Name JEFFREY C WAGNER

Date Tested [illegible]

Electrical

Connect electrical conductors between multi-wide units, but not to the main power source. This includes the bonding wire between mult-wide units. Pg. _____

Plumbing

Connect all sewer drains to an existing sewer tap or septic tank. Pg. _____

Connect all potable water supply piping to an existing water meter, water tap, or other independent water supply systems. Pg. _____

Site Preparation

Debris and organic material removed _____

Water drainage: Natural _____ Swale _____ Pad ✓ Other _____

Fastening multi wide units

Floor:	Type Fastener: LAGS	Length: 6"	Spacing: 16"
Walls:	Type Fastener: LAGS	Length: 8"	Spacing: 8"
Roof:	Type Fastener: LAGS	Length: 8"	Spacing: 16"

For used homes a min. 30 gauge, 8" wide, galvanized metal strip will be centered over the peak of the roof and fastened with galv. roofing nails at 2" on center on both sides of the centerline.

Gasket (weatherproofing requirement)

I understand a properly installed gasket is a requirement of all new and used homes and that condensation, mold, meldew and buckled marriage walls are a result of a poorly installed or no gasket being installed. I understand a strip of tape will not serve as a gasket.

Installer's initials _____

Type gasket _____

Pg. 21

Installed:

Between Floors (Yes)

Between Walls (Yes)

Bottom of ridgebeam (Yes)

Weatherproofing

The bottomboard will be repaired and/or taped (Yes) Pg. _____

Siding on units is installed to manufacturer's specifications. (Yes)

Fireplace chimney installed so as not to allow intrusion of rain water (Yes)

Miscellaneous

Skirting to be installed. (Yes) No _____

Dryer vent installed outside of skirting. (Yes) N/A _____

Range downflow vent installed outside of skirting. (Yes) N/A _____

Drain lines supported at 4 foot intervals. (Yes)

Electrical crossovers protected (Yes)

Other : _____

Installer verifies all information given with this permit worksheet is accurate and true based on the manufacturer's installation instructions and or Rule 15C-1 & 2

Installer Signature [signature] Date _____

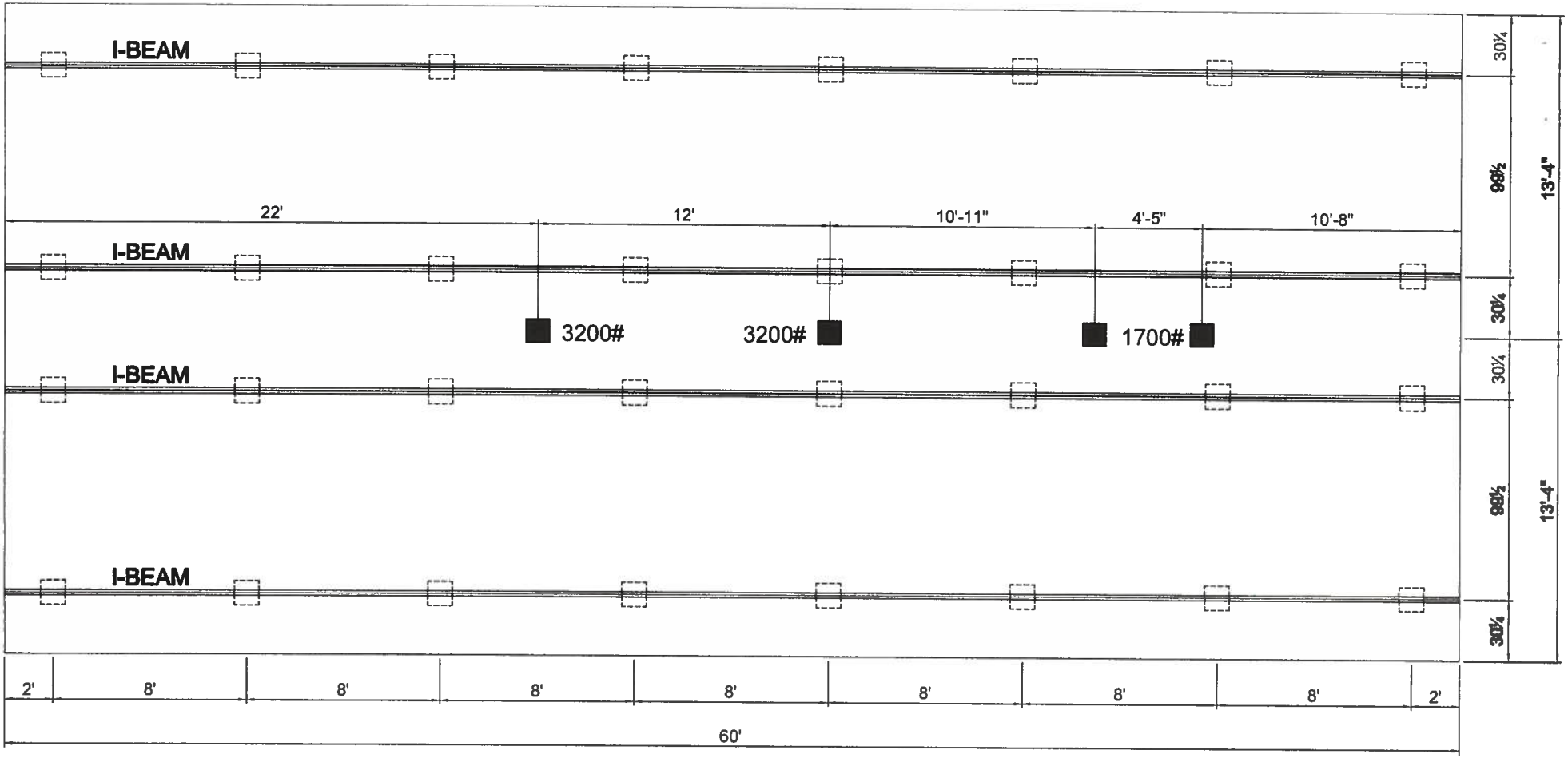

COLUMN BLOCKING
SEE SOIL BEARING CAPACITY CHARTS FOR PAD SIZE

BLOCKING

1) ALL EXTERIOR DOORS, BAY WINDOWS, RECESSED SIDEWALLS AND EXTERIOR WALL OPENINGS 48" OR GREATER. WILL REQUIRE BLOCKING ON EACH SIDE.

(Boykin)

Redman Homes

P.O. BOX 2097 HWY 100 EAST LAKE CITY, FL 32056

DAPIA SEAL

MODIFICATIONS

PROPRIETARY AND CONFIDENTIAL
THESE DRAWINGS AND SPECIFICATIONS ARE ORIGINAL, PROPRIETARY AND CONFIDENTIAL MATERIALS OF CHAMPION.
COPYRIGHT ©1976-2007 BY CHAMPION

MODEL: 261-R4603A

TITLE: PIER FOUNDATION

DRAWN BY: GCK

DATE: 01-06-14

The "Hillsboro"

SHEET: S-20

MODEL 261-R4603A

3 BEDROOM, 2 BATH
ACTUAL SIZE: 26'-8" x 60'-0"
TOTAL AREA: 1,600 SQ. FT.

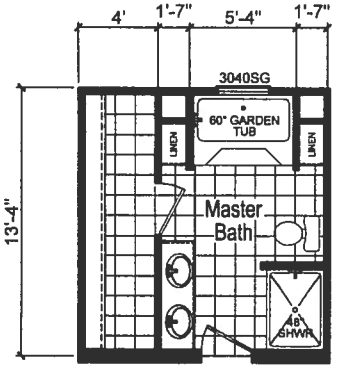

OPT. GLAMOUR BATH-1

Clg Duct ~ No Furn

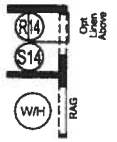

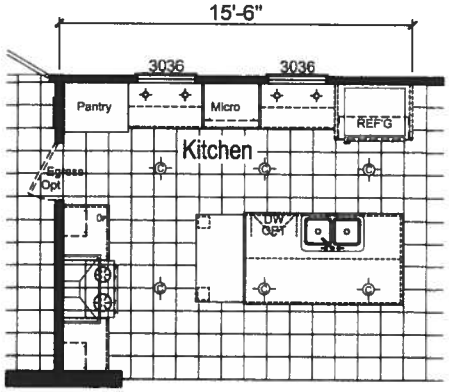

OPT. BAYPOINT KITCHEN

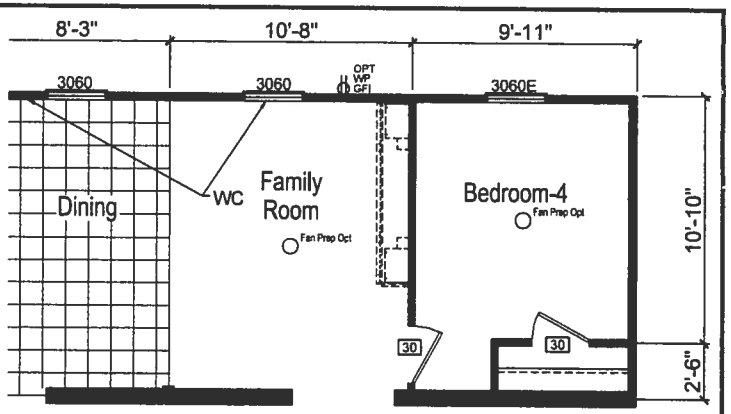

OPT. BEDROOM-4

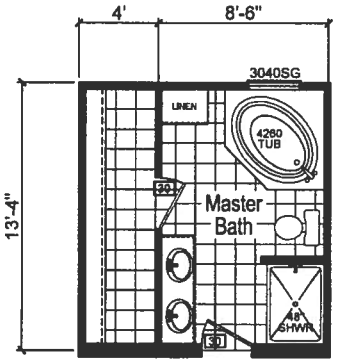

OPT. GLAMOUR BATH-2

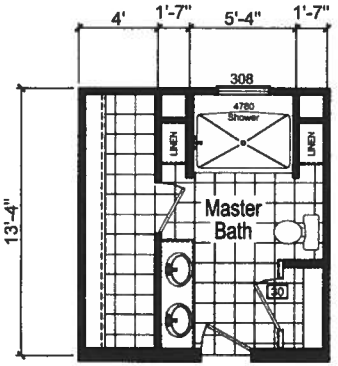

OPT. GLAMOUR BATH-3

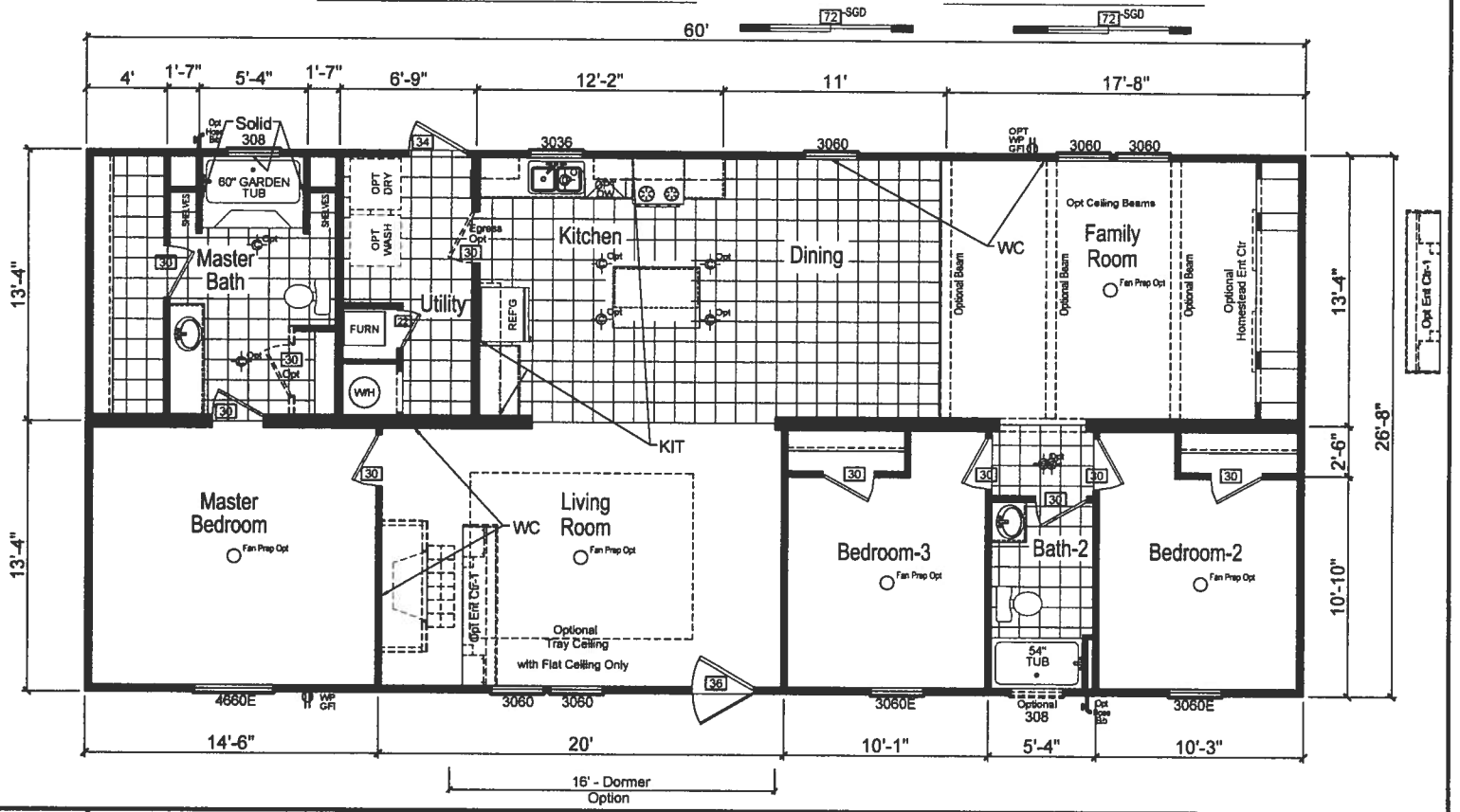

CHAMPION

MANUFACTURED BEAUTIFULLY™

P.O. BOX 2097 HWY 100 EAST LAKE CITY, FL 32056

DAPIA SEAL

MODIFICATIONS			
6	Omited Flutted Drywall Breaks	GCK	06-05-15
7	Added Opt Glamour Bath-2	GCK	01-12-16
8	Added Opt Glamour Bath-3	GCK	03-11-16
9	Added Opt Kit and New Opt Ent Ctr	GCK	06-28-16

PROPRIETARY AND CONFIDENTIAL
THESE DRAWINGS AND SPECIFICATIONS ARE ORIGINAL, PROPRIETARY AND CONFIDENTIAL MATERIALS OF CHAMPION.
COPYRIGHT © 1976-2007 BY CHAMPION

MODEL: 261-R4603A

TITLE: BLACKLINE

DRAWN BY: GCK

DATE: 01-06-14

The "Hillsboro"

SHEET: L-101

REV. I

V: 4.09

MULTI-WIDE SHEARWALL WORKSHEET

Foamed Ceiling Diaghragm

S-1

By: GCK

GENERAL NOTES:

1- For shearwall construction and maximum plf ratings see the GE06.XX.XX section of the DAPIA manual.
2- For other information not shown see SW-Section of the DAPIA manual.
3- Roof pitch is 2/12 min. 7/12 max.

JOIST SPECIFICATIONS:

1- Joist spacing (16", 19.2" or 24" o.c.) =
2- Joist size (2x6, 2x8, 2x10) =
3- Joist grade & specie =

See Page 2

Model # R4603A

Unit width (FT) 28

Unit length (FT) 60

Max. Ceiling Diaphragam Span ZONE I ..... 48 ft.
Max. Ceiling Diaphragam Span ZONE II ..... 44 ft.
Max. Ceiling Diaphragam Span ZONE III ..... 44 ft.

Wall height (in) = 96

Truss Information:

Heel Height (in) = 6
Over-all Height (in) = 36
Box Width (in) = 160
Roof Slope (deg) = 10.62 OK

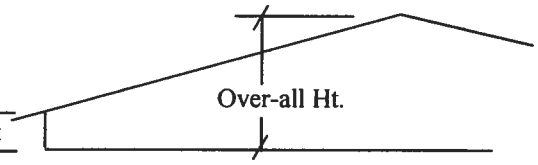

When roof slope exceeds 20 degrees PLF = (((Wall height/2) + Overall truss height) /12) x Wind Zone PSF

WIND LOADING:

	PSF	PLF
Zone I	15	60
Zone II	39	156
Zone III	47	188

PFS #22 Conforms to HUD MHCSS 1/15/14

PROPRIETARY AND CONFIDENTIAL
THESE CALCULATIONS AND SPECIFICATIONS ARE ORIGINAL,
PROPRIETARY, AND CONFIDENTIAL MATERIALS OF CHAMPION HOME BUILDER, INC.
COPYRIGHT 2013 BY CHAMPION

FLOOR PLAN MODEL NO. R4603A **S-1**

Joist: 2x6 #3 SPF at 19.2" o.c. ZONE I TABLE DAPIA Page Refence: SW18.25.04

Wall	Wall length (in)	Tabular span (ft.) Left	Right	Check	PLF	*No. of Joists under shearwall Frame spacing (in) 99.5	96	80
1	144	0	25.6	OK	64	1		
2	144	25.6	34.4	OK	150	1		
3	144	34.4	0	OK	86	1		
4	1	0	0	OK	0	0		
5	1	0	0	OK	0	0		
6	1	0	0	OK	0	0		
7	1	0	0	OK	0	0		
8	1	0	0	OK	0	0		
9	1	0	0	OK	0	0		
10	1	0	0	OK	0	0		
	Total	60	60					

Joist: 2x6 #2 SPF at 19.2" o.c. ZONE II TABLE DAPIA Page Refence: SW18.29.01

Wall	Wall length (in)	Tabular span (ft.) Left	Right	Check	PLF	*No. of Joists under shearwall Frame spacing (in) 99.5	96	80
1	144	0	25.6	OK	166	2		
2	144	25.6	19.9	OK	296	3		
3	116	19.9	14.5	OK	278	2		
4	144	14.5	0	OK	94	1		
5	1	0	0	OK	0	0		
6	1	0	0	OK	0	0		
7	1	0	0	OK	0	0		
8	1	0	0	OK	0	0		
9	1	0	0	OK	0	0		
10	1	0	0	OK	0	0		
	Total	60	60					

Joist: 2x6 #2 SPF at 19.2" o.c. ZONE III TABLE DAPIA Page Refence: SW18.29.01

Wall	Wall length (in)	Tabular span (ft.) Left	Right	Check	PLF	*No. of Joists under shearwall Frame spacing (in) 99.5	96	80
1	144	0	25.6	OK	201	2		
2	144	25.6	19.9	OK	356	3		
3	116	19.9	14.5	OK	335	3		
4	144	14.5	0	OK	114	2		
5	1	0	0	OK	0	0		
6	1	0	0	OK	0	0		
7	1	0	0	OK	0	0		
8	1	0	0	OK	0	0		
9	1	0	0	OK	0	0		
10	1	0	0	OK	0	0		
	Total	60	60					

* (1) lag in each joist and no block(s) at beam.

PFS #22 ® Conforms to HUD MHCSS 1/15/14

PROPRIETARY AND CONFIDENTIAL
THESE CALCULATIONS AND SPECIFICATIONS ARE ORIGINAL, PROPRIETARY, AND CONFIDENTIAL MATERIALS OF CHAMPION HOME BUILDER, INC
COPYRIGHT 2013 BY CHAMPION

OLIVER Technologies, Inc.
467 Swan Ave • Hohenwald, TN 38462 • (800) 284-7437 • www.olivertechnologies.com • Fax (931) 796-8811

A New

OLIVER TECHNOLOGIES, INC.
FLORIDA INSTALLATION INSTRUCTIONS FOR THE
MODEL 1101 "V" SERIES ALL STEEL FOUNDATION SYSTEM

MODEL 1101"V" (Steps 1-14)
LONGITUDINAL ONLY: Follow Steps 1-9
LATERAL ONLY: Follow Steps 1-3 and Steps 10-14
FOR CONCRETE APPLICATIONS: Follow Steps 15-18

ENGINEERS STAMP

ENGINEERS STAMP

. **SPECIAL CIRCUMSTANCES:** If the following conditions occur - ***STOP! Contact Oliver Technologies at 1-800-284-7437 :***

a) Pier height exceeds 48"
b) length of home exceeds 76'
c) Roof eaves exceed 16"
d) Sidewall height exceed 96"
e) Location is within 1500 feet of coast

INSTALLATION OF GROUND PAN

1. Remove weeds and debris in an approximate two foot square to expose firm soil for each ground pan (C) .
2. Place ground pan (C) directly below chassis I-beam. Press or drive pan firmly into soil until flush or below soil then install pier per manufacturer's instructions or per Florida Regs.

SPECIAL NOTE: The longitudinal "V" brace system may also serve as a pier under the home and should be loaded as any other pier. It is recommended that after leveling piers, and one-third inch (1/3") before home is lowered completely on to piers, complete steps 4 through 9 below then remove jacks.

INSTALLATION OF LONGITUDINAL "V" BRACE SYSTEM (Model 1101 L "V")

NOTE: WHEN INSTALLING THE LONGITUDINAL SYSTEM ONLY, A MINIMUM OF 2 SYSTEMS PER FLOOR SECTION IS REQUIRED. SOIL TEST PROBE SHOULD BE USED TO DETERMINE CORRECT TYPE OF ANCHOR PER SOIL CLASSIFICATION. IF PROBE TEST READINGS ARE BETWEEN 175 & 275 A 5 FOOT ANCHOR MUST BE USED. IF PROBE TEST READINGS ARE BETWEEN 276 & 350 A 4 FOOT ANCHOR MAY BE USED. USE GROUND ANCHORS WITH DIAGONAL TIES AND STABILIZER PLATES EVERY 5'4" . VERTICAL TIES ARE ALSO REQUIRED ON HOMES SUPPLIED WITH VERTICAL TIE CONNECTION POINTS (PER FLORIDA REG.).

4. Choose one of the approved longitudinal tube installations; either Diagram A or B. Then select the correct square tube (E) length from the diagram for appropriate pier height at support location or cut and drill 1.5" square tube to achieve appropriate length.

PIER HEIGHT (40° Min. - 45° Max.)	1.25" Tube Length	1.50" Tube Length
7 3/4" to 25"	22"	18"
24 3/4" to 32 1 /4"	32"	18"
33" to 41"	44"	18"
40" to 48"	54"	18"

Diagram A

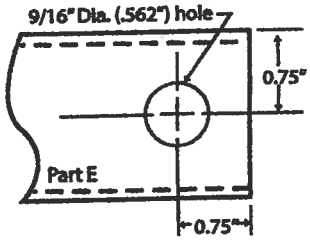

PIER HEIGHT (40° Min. - 60° Max.)	1.50" Tube Length
14" to 18"	20"
18" to 25"	28"
24" to 35"	39"
30" to 40"	44"
36" to 48"	54"

Diagram B

5. Install (2) of the 1.50" square tubes (E) into the "U" bracket (J), insert carriage bolt and leave nut loose for final adjustment.
6. Place I-beam connector (F) loosely on the bottom flange of the I-beam.
7. (For Diagram A installation) Slide the selected 1.25" tube (E) into a 1.50" tube (E) and attach to I-beam connectors (F) and fasten loosely with bolt and nut. (For Diagram B installation) Attach the selected 1.5" tubes (E) to the I-beam connectors (F) and fasten loosely with bolt and nuts.
8. Repeat steps 6 through 7 to create the "V" pattern of the square tubes loosely in place.
9. Using standard hand tools tighten all nuts and bolts. (For Diagram A installation only, secure 1.25" and 1 .50" tubes using four(4) 1 /4"-14 x 3/4" self-tapping screws in pre-drilled holes.)

INSTALLATION OF LATERAL TELESCOPING TRANSVERSE ARM SYSTEM (Model 1101 T "V")

THE MODEL 1101 "V" (LONGITUDINAL & LATERAL PROTECTION) ELIMINATES THE NEED FOR STABILIZER PLATES & FRAME TIES.
NOTE: THE USE OF THIS SYSTEM REQUIRES VERTICAL TIES SPACED AT 5'4".
FOUR FOOT (4') GROUND ANCHOR MAY BE USED EXCEPT WHERE THE HOME MANUFACTURER SPECIFIES DIFFERENT.

10. Install remaining vertical tie-down straps and 4' ground anchors per home manufacturer's instructions. NOTE: Centerline anchors to be sized according to soil torque condition. Any manufacturer's specifications for sidewall anchor loads in excess of 4,000 lbs. require a 5' anchor per Florida Code.
11. Select the correct square tube brace (H) length for set-up lateral transverse at support location. The lengths come in either 60" or 72" lengths. (With the 1.50" tube as the bottom tube, and the 1.25" tube as the inserted tube.)
12. Install the 1.50 transverse brace (H) to the ground pan connector (D) with bolt and nut.
13. Slide 1.25" transverse brace into the 1.50" brace and attach to adjacent I-beam connector (I) with bolt and nut.
14. Secure 1.50" transverse arm to 1.25" transverse arm using four (4) 1 /4" - 14 x 3/4" self-tapping screws in pre-drilled holes.

OLIVER Technologies, Inc.
467 Swan Ave • Hohenwald, TN 38462 • (800) 284-7437 • www.olivertechnologies.com • Fax (931) 796-8811

INSTALLATION USING CONCRETE RUNNER/ FOOTER

5. A concrete runner, footer or slab may be used in place of the steel ground pan.
   a) The concrete shall be minimum 2500 psi mix
   b) A concrete runner may be either longitudinal or transverse, and must be a minimum of 8" deep with a minimum width of 16 inches longitudinally or 18 inches transverse to allow proper distance between the concrete bolt and the edge of the concrete (see below).
   c) Footers must have minimum surface area of 441 sq. in. (i.e. 21" square), and must be a minimum of 8" deep.
   d) If a full slab is used, the depth must be a 4" minimum . Special inspection of the system bracket installation is not required. Footers must allow for at least 4" from the concrete bolt to the edge of the concrete.

NOTE: The bottom of all footings, pads, slabs and runners must be per local jurisdiction.

LONGITUDINAL: (Model 1101 LC "V")

6. When using Part# 1101-W-CPCA (wetset) simply install the bracket in runner/footer **OR** When installing in cured concrete use Part# 101-D-CPCA (dryset}. The 1101 (dryset) CA bracket is attached to the concrete using (2) 5/8"x3" concrete wedge bolts (Simpson part # S162300H 5/8" X 3" or Powers equivalent). Place the CA bracket in desired location. Mark bolt hole locations, then using a 5/8" diameter masonry bit, drill a hole to a minimum depth of 3". Make sure all dust and concrete is blown out of the holes. Place wedge bolts into dril holes, then place 1101 (dry set) CA bracket onto wedge bolts and start wedge bolt nuts. Take a hammer and lightly drive the wedge bol down by hitting the nut (making sure not to hit the top of threads on bolt). The sleeve of concrete wedge bolt needs to be at or below t top of concrete. Complete by tightening nuts.

LATERAL: (Model 1101 TC "V")

7. For wet set (part # 1101-W-TACA) installation simply install the anchor bolt into runner/footer. For dry set installation (part # 1101-D-TAC mark bolt hole locations, then using a 5/8" diam. masonry bit. drill a hole to a minimum depth of 3". Make sure all dust and concrete is blown out of the hole. Place wedge bolts (Simpson part #S162300H 5/8" X 3" or Powers equivalent) into (D) concrete dry transverse connector and into drilled hole. If needed, take a hammer and lightly drive the wedge bolts down by hitting the nut (making sure not t hit the top of threads on bolt), then remove the nut. The sleeve of concrete wedge bolt needs to be at or below the top of concrete.
8. When using part# 1101 CVW (wetset) or 1101 CVD (dryset), install per steps 17 & 18.

Notes:
1. **LENGTH OF HOUSE IS THE ACTUAL BOX SIZE**
2. **= LOCATION OF TRANSVERSE BRACING ONLY**
3. **= LOCATION OF LONGITUDINAL BRACING ONLY**
4. **= TRANSVERSE AND LONGITUDINAL LOCATIONS**

ALL WIDTHS AND LENGTHS UP TO 52'

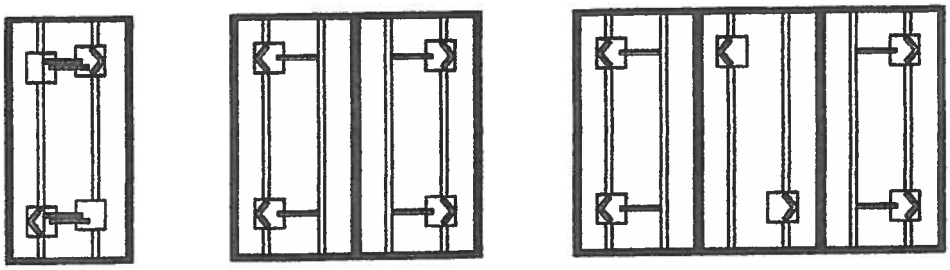

ALL WIDTHS AND LENGTHS OVER 52' TO 80"

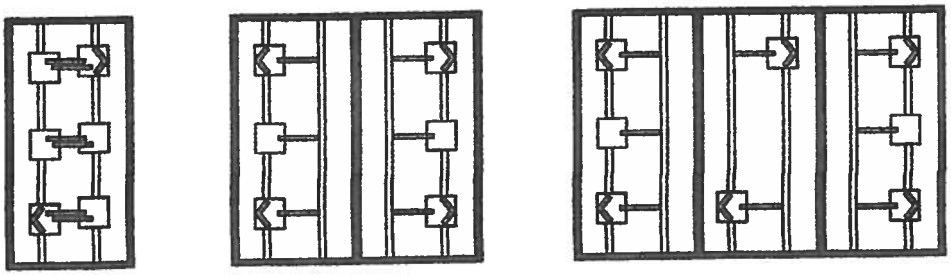

HOMES WITH 5/12 ROOF PITCH REQUIRE: PER FLORIDA REGULATIONS
6 systems for home lengths up to 52' and 8 systems for homes over 52' and up 80'.

PATENT# 6634150 & OTHER PATENT PENDING

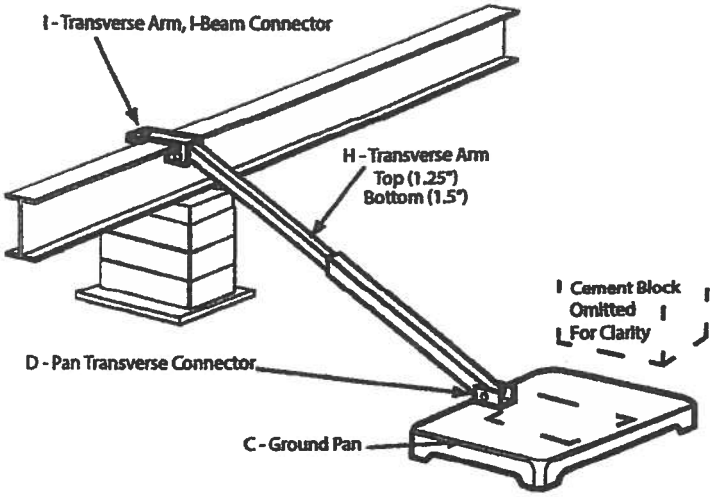

Model # 1101 T "V"

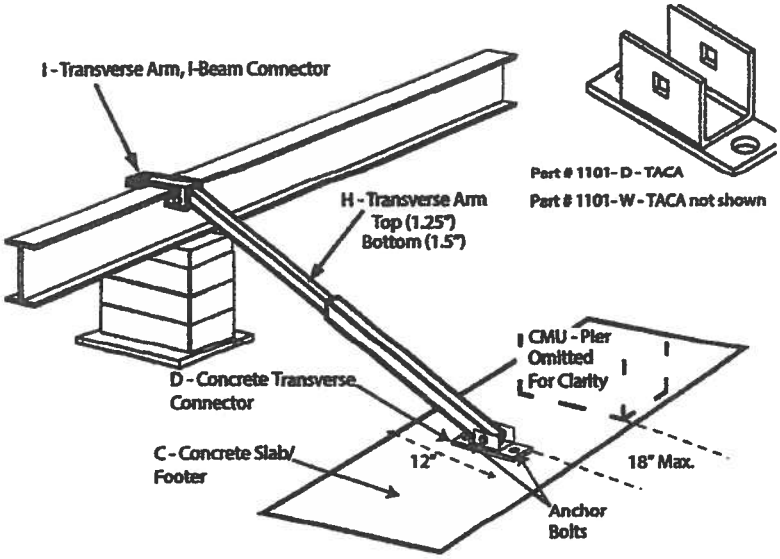

Model # 1101 TC "V"

Florida approved 4' ground anchors may be used in all locations except where home manufacturers specifications for sidewall straps are in excess of 4,000 lbs. These locations require a 5' anchor. Per Florida code.

C = GROUND PAN / CONCRETE FOOTER OR RUNNER

D = GROUND PAN / CONCRETE U BRACKETS TRANSVERSE CONNECTOR (connects with grade 5 - 1/2" x 2" 1/2" carriage bolt and nut)

E = TELESCOPING V BRACE TUBE ASSEMBLY (1.5" TUBE BOTTOM AND 1.25" TUBE INSERT) OR 1.5" TUBE

F = "V" BRACE I-BEAM CONNECTOR ASSEMBLY

H = TELESCOPING TRANSVERSE ARM ASSEMBLY

I = TRANSVERSE ARM I-BEAM CONNECTOR (connects with grade 5 - 1/2" x 2" 1/2" carriage bolt and nut)

J = V PAN BRACKET (connects with grade 5 - 1/2" x 2" 1/2" carriage bolt and nut)

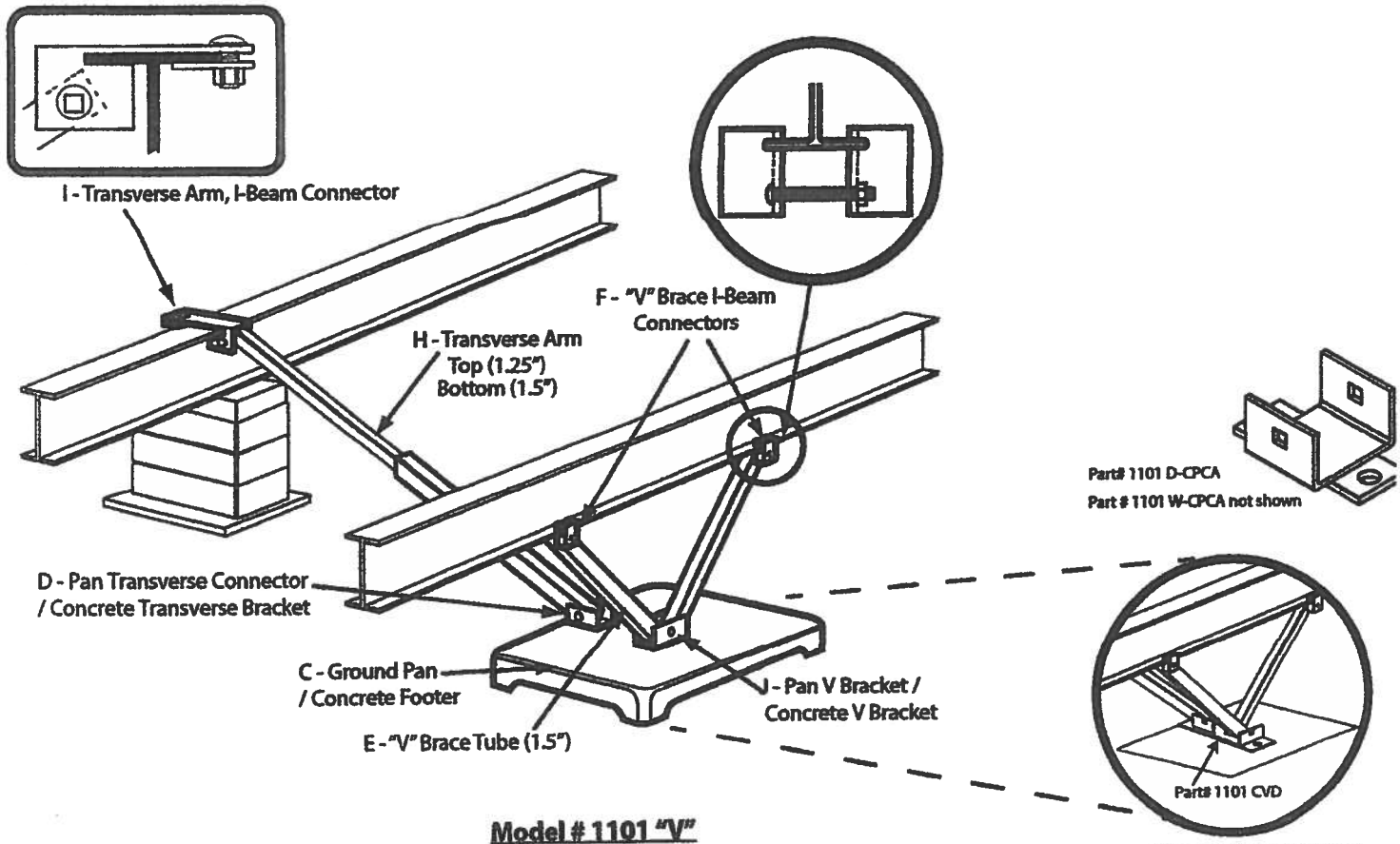

Model # 1101 "V"

Model # 1101 C "V"

PATENT# 6634150 & OTHER PATENT PENDING

OLIVER Technologies, Inc.
467 Swan Ave • Hohenwald, TN 38462 • (800) 284-7437 • www.olivertechnologies.com • Fax (931) 796-8811

OLIVER TECHNOLOGIES, INC.
INSTALLATION INSTRUCTIONS FOR FLORIDA
MODEL 1101 "V" SERIES ALL STEEL FOUNDATION SYSTEM PAN & CONCRETE (revision 5/18)

PATENT# 6634150 & OTHER PATENT PENDING

License Number: IH / 1025438 / 1 Name: JEFFREY C. WAGNER

Order #: 3714 Label #: 58539	Manufacturer:	(Check Size of Home)
Homeowner: Bokin	Year Model:	Single ____
Address: 806 Hauman Cola	Length & Width:	Double ____
		Triple ____
City/State/Zip: Ft White FL	Type Longitudinal System:	HUD Label #:
Phone #:	Type Lateral Arm System:	Soil Bearing / PSF:
Date Installed:	New Home:____ Used Home:____	Torque Probe / in-lbs:
Installed Wind Zone:	Data Plate Wind Zone:	Permit #:
Note:		

STATE OF FLORIDA
INSTALLATION CERTIFICATION LABEL

58539

LABEL # DATE OF INSTALLATION

JEFFREY C. WAGNER

NAME

IH / 1025438 / 1 3714

LICENSE # ORDER #

CERTIFIES THAT THE INSTALLATION OF THIS MOBILE HOME IS IN ACCORDANCE WITH FLORIDA STATUTES 320.8249, 320.8325 AND RULES OF THE HIGHWAY SAFETY AND MOTOR VEHICLES.

INSTRUCTIONS

PLEASE WRITE DATE OF INSTALLATION AND AFFIX LABEL NEXT TO HUD LABEL. USE PERMANENT INK PEN OR MARKER ONLY. COMPLETE INFORMATION ABOVE AND KEEP ON FILE FOR A MINIMUM OF 2 YEARS. YOU ARE REQUIRED TO PROVIDE COPIES WHEN REQUESTED.

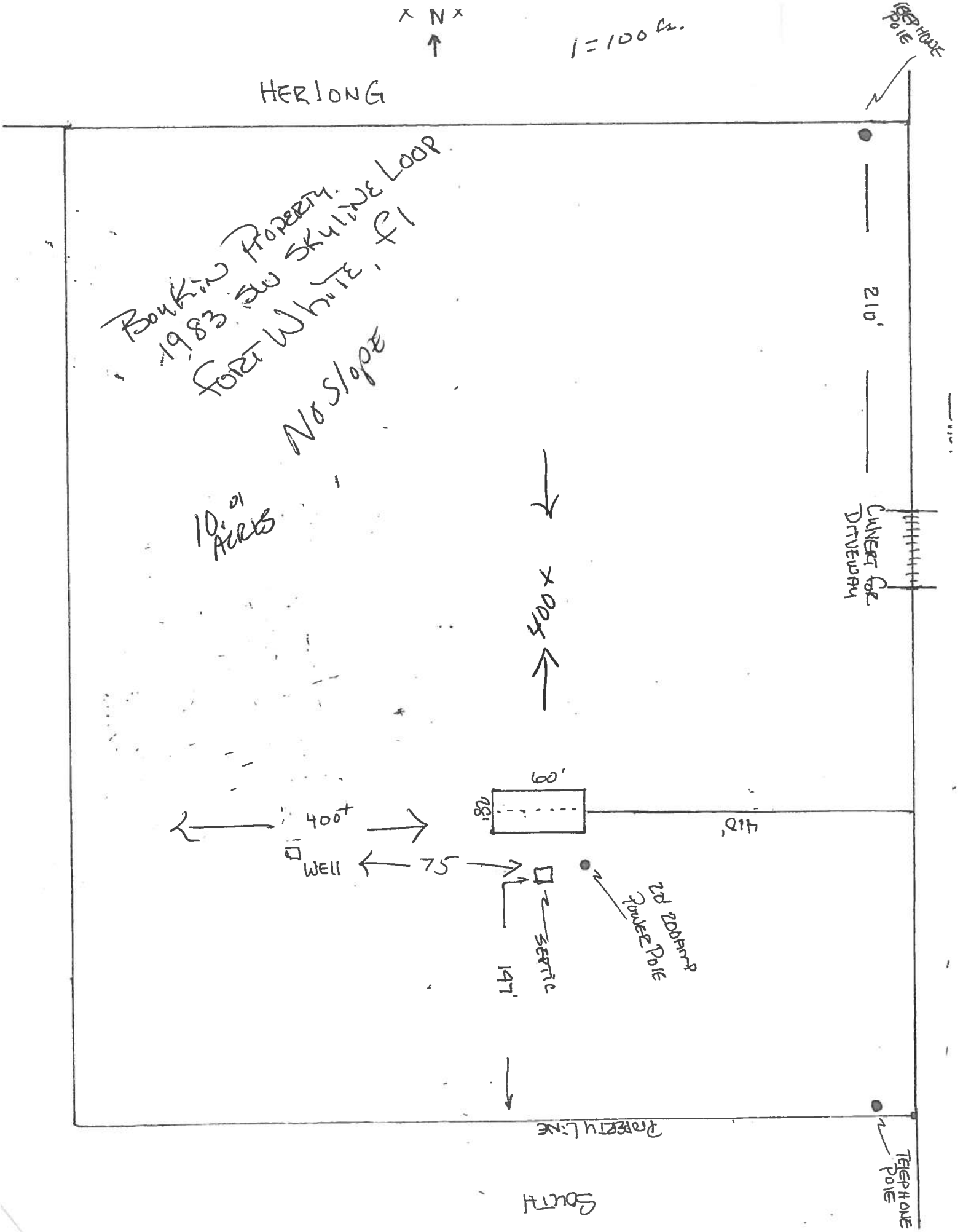
N
1=100 ft.
HERLONG
TELEPHONE POLE
BOUKIN PROPERTY.
1983 SW SKYLINE LOOP
FORT WHITE, FL
NO SLOPE
10.01 ACRES
210'
CULVERT FOR DRIVEWAY
400
60'
28'
400+
WELL
75
SEPTIC
197'
20' 200AMP POWER POLE
PROPERTY LINE
TELEPHONE POLE
SOUTH

COLUMBIA COUNTY BUILDING DEPARTMENT
135 NE Hernando Ave, Suite B-21, Lake City, FL 32055
Phone: 386-758-1008 Fax: 386-758-2160

MOBILE HOME INSTALLERS LETTER OF AUTHORIZATION

I, Jeff Wagner (Installer License Holder Name), give this authority for the job address show below only, 1983 SW Skyline Loop Ft White, FL (Job Address), and I do certify that the below referenced person(s) listed on this form is/are under my direct supervision and control and is/are authorized to purchase permits, call for inspections and sign on my behalf.

Printed Name of Authorized Person	Signature of Authorized Person	Authorized Person is… (Check one)
Cherie Howington		X Agent ___ Officer ___ Property Owner
Chelsea Knighs		X Agent ___ Officer ___ Property Owner
		___ Agent ___ Officer ___ Property Owner

I, the license holder, realize that I am responsible for all permits purchased, and all work done under my license and I am fully responsible for compliance with all Florida Statutes, Codes, and Local Ordinances.

I understand that the State Licensing Board has the power and authority to discipline a license holder for violations committed by him/her or by his/her authorized person(s) through this document and that I have full responsibility for compliance granted by issuance of such permits.

License Holders Signature (Notarized) — License Number: RH1075438 — Date: 1-16-19

NOTARY INFORMATION:
STATE OF: Florida COUNTY OF: Hillsborough

The above license holder, whose name is Jeff Wagner, personally appeared before me and is known by me or has produced identification (type of I.D.) _____ on this 16th day of January, 2019.

NOTARY'S SIGNATURE

(Seal/Stamp)

SANDY CANNON
Notary Public – State of Florida
Commission # GG 36068
My Comm. Expires Jan 27, 2021

SANDY CANNON
Notary Public – State of Florida
Commission # GG 36068
My Comm. Expires Jan 27, 2021

MOBILE HOME INSTALLATION SUBCONTRACTOR VERIFICATION FORM

APPLICATION NUMBER 1901 - 53 CONTRACTOR Jeff Wagner PHONE 8136505024

THIS FORM MUST BE SUBMITTED PRIOR TO THE ISSUANCE OF A PERMIT

In Columbia County one permit will cover all trades doing work at the permitted site. It is REQUIRED that we have records of the subcontractors who actually did the trade specific work under the permit. Per Florida Statute 440 and Ordinance 89-6, a contractor shall require all subcontractors to provide evidence of workers' compensation or exemption, general liability insurance and a valid Certificate of Competency license in Columbia County.

Any changes, the permitted contractor is responsible for the corrected form being submitted to this office prior to the start of that subcontractor beginning any work. Violations will result in stop work orders and/or fines.

ELECTRICAL ✓ 1736	Print Name Josh Barnes Signature Josh Barnes License #: ES12000724 Phone #: 863 812 6722 Qualifier Form Attached ✓
MECHANICAL/ A/C ✓ 2037	Print Name James Brown Signature James Brown License #: CAC1818095 Phone #: 863 - 812 6722 Qualifier Form Attached ✓

F. S. 440.103 Building permits; identification of minimum premium policy.--Every employer shall, as a condition to applying for and receiving a building permit, show proof and certify to the permit issuer that it has secured compensation for its employees under this chapter as provided in ss. 440.10 and 440.38, and shall be presented each time the employer applies for a building permit.

Revised 4/27/2017

STATE OF FLORIDA
DEPARTMENT OF HEALTH
APPLICATION FOR ONSITE SEWAGE DISPOSAL SYSTEM CONSTRUCTION PERMIT

Permit Application Number 19-0001

McCaulley (Boykin) PART II - SITEPLAN

Scale: 1 inch = 40 feet.

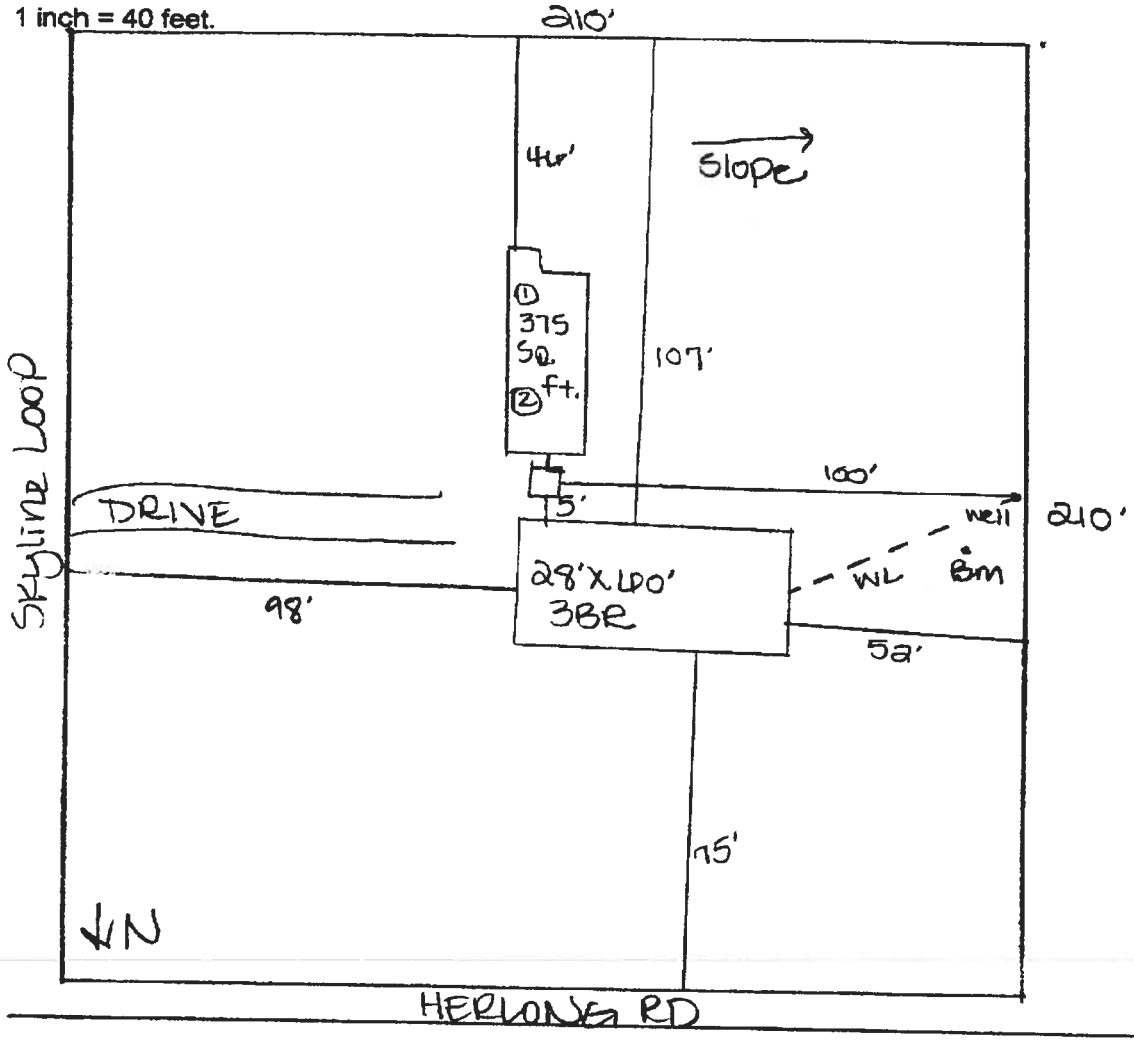

Notes:

1 ACRE OF 9.37

Site Plan submitted by: 1-2-19

MASTER CONTRACTOR

Plan Approved ✓ Not Approved ____ Date 1/9/19

By ESI Columbia County Health Department

ALL CHANGES MUST BE APPROVED BY THE COUNTY HEALTH DEPARTMENT

19-0001

PERMIT NO. 1391019
DATE PAID: 1-4-19
FEE PAID: 320.00
RECEIPT #: 1391019

STATE OF FLORIDA
DEPARTMENT OF HEALTH
ONSITE SEWAGE TREATMENT AND DISPOSAL SYSTEM
APPLICATION FOR CONSTRUCTION PERMIT

APPLICATION FOR:
[X] New System [ ] Existing System [ ] Holding Tank [ ] Innovative
[ ] Repair [ ] Abandonment [ ] Temporary [ ] _____

APPLICANT: Gregory McCaulley (Boykin)

AGENT: ROCKY FORD, A & B CONSTRUCTION TELEPHONE: 386-497-2311

MAILING ADDRESS: 546 SW Dortch Street, FT. WHITE, FL, 32038

TO BE COMPLETED BY APPLICANT OR APPLICANT'S AUTHORIZED AGENT. SYSTEMS MUST BE CONSTRUCTED BY A PERSON LICENSED PURSUANT TO 489.105(3)(m) OR 489.552, FLORIDA STATUTES. IT IS THE APPLICANT'S RESPONSIBILITY TO PROVIDE DOCUMENTATION OF THE DATE THE LOT WAS CREATED OR PLATTED (MM/DD/YY) IF REQUESTING CONSIDERATION OF STATUTORY GRANDFATHER PROVISIONS.

PROPERTY INFORMATION

LOT: 43 BLOCK: N/A SUB: Cardinal Farms PLATTED: _____

PROPERTY ID #: 10-6S-16E-03815-143 ZONING: Res. I/M OR EQUIVALENT: [Y / N]

PROPERTY SIZE: 9.37 ACRES WATER SUPPLY: [X] PRIVATE PUBLIC [ ]<=2000GPD [ ]>2000GPD

IS SEWER AVAILABLE AS PER 381.0065, FS? [Y / N] DISTANCE TO SEWER: N/A FT

PROPERTY ADDRESS: 1983 SW Skyline Loop Ft. White

DIRECTIONS TO PROPERTY: 47 S TL on Herlong to 1st Skyline Lp TR 1st lot on R

BUILDING INFORMATION [X] RESIDENTIAL [ ] COMMERCIAL

Unit No	Type of Establishment	No. of Bedrooms	Building Area Sqft	Commercial/Institutional System Design Table 1, Chapter 64E-6, FAC
1	SF Residential	3	1400	
2				
3				

[ ] Floor/Equipment Drains [ ] Other (Specify) _____

SIGNATURE: Rocky Ford DATE: 12/27/2018

DH 4015, 08/09 (Obsoletes previous editions which may not be used)
Incorporated 64E-6.001, FAC

Legend

Columbia County, FLA - Building & Zoning Property Map

Printed: Wed Jan 23 2019 09:16:12 GMT-0500 (Eastern Standard Time)

Lake City

FutureLandUseMap
- Mixed Use Development
- Light Industrial
- Industrial
- Highway Interchange
- Commercial
- Residential High Density (< 20 d.u. per acre)
- Residential Medium/High Density (< 14 d.u. per acre)
- Residential Medium Density (< 8 d.u. per acre)
- Residential Moderate Density (< 4 d.u. per acre)
- Residential Low Density (< 2 d.u. per acre)
- Residential Very Low Density (< 1 d.u. per acre)
- Agriculture - 3 (< 1 d.u. per 5 acres)
- Agriculture - 2 (< 1 d.u. per 10 acres)
- Agriculture - 1 (< 1 d.u. per 20 acres)
- Environmentally Sensitive Areas (< 1 d.u. per 10 acres)
- Public
- Recreation
- Conservation

Roads
- Roads
- others
- Dirt
- Interstate
- Main
- Other
- Paved
- Private

DevZones1
- others
- A-1
- A-2
- A-3
- CG
- CHI
- CI
- CN
- CSV
- ESA-2
- I
- ILW
- MUD-I
- PRD
- PRRD
- RMF-1
- RMF-2
- RO
- RR
- RSF-1
- RSF-2
- RSF-3
- RSF/MH-1
- RSF/MH-2
- RSF/MH-3
- DEFAULT

2016Aerials
- Ft White

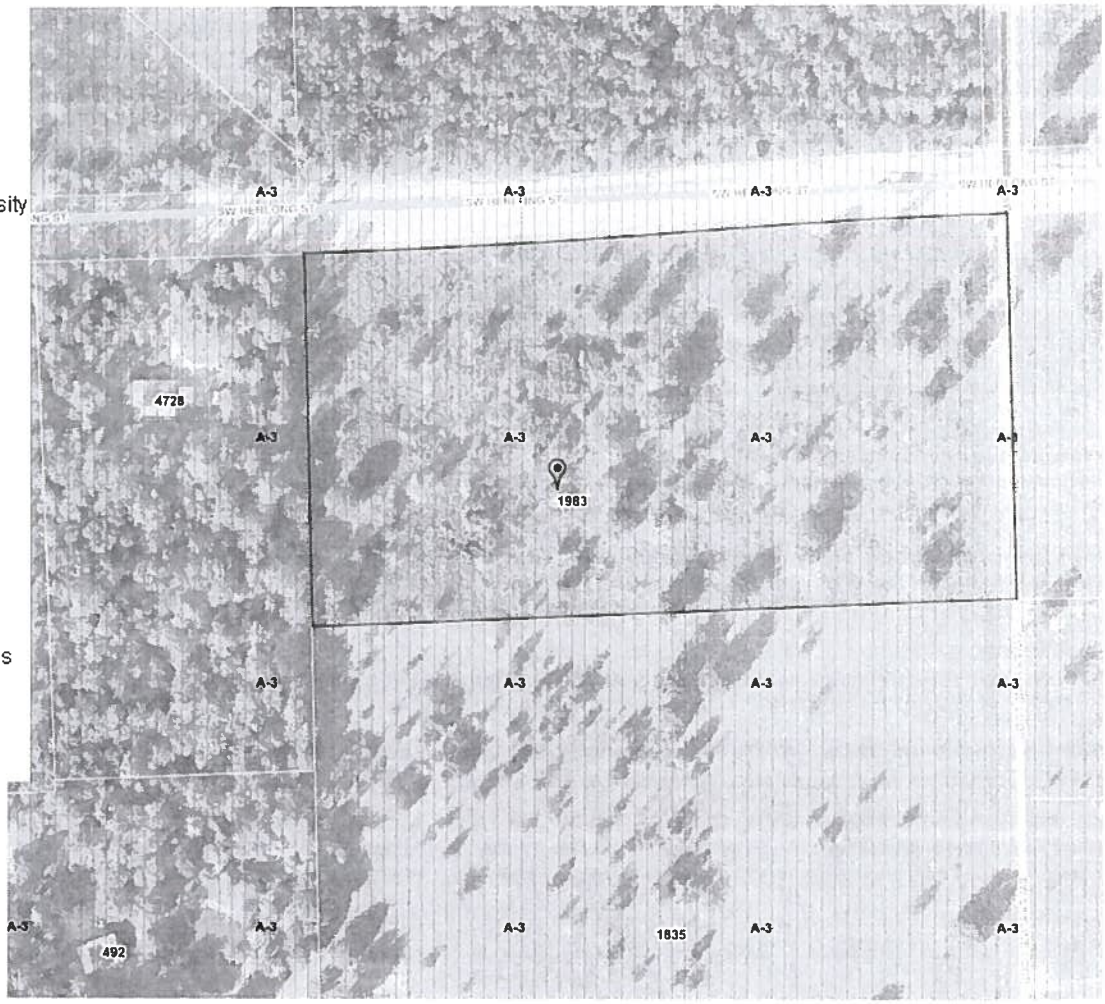

Parcel Information

Parcel No: 10-6S-16-03815-143

Owner: MCCAULLEY GREGORY A & KRISTIN

Subdivision: CARDINAL FARMS UNR

Lot: 43

Acres: 9.413859

Deed Acres: 10.01 Ac

District: District 2 Rocky Ford

Future Land Uses: Agriculture - 3

Flood Zones:

Official Zoning Atlas: A-3

Ok for 911 Address Going in Same location.

All data, information, and maps are provided "as is" without warranty or any representation of accuracy, timeliness of

Prepared by:

Heritage Title Services of North Florida, Inc.
201 Parshley Street S.W.
Live Oak, Florida 32064

File Number: 18-0398

Inst: 201812024029 Date: 11/21/2018 Time: 2:55PM
Page 1 of 2 B: 1373 P: 217, P.DeWitt Cason, Clerk of Court
Columbia, County, By: PT
Deputy ClerkDoc Stamp-Deed: 420.00

General Warranty Deed

Made this November 19, 2018 A.D. By **Gregory A. McCaulley, a single man and Kristin L. Lazzaris, a single person**, whose post office address is: 655 Horning Road, Bethel Park, Pennsylvania 15236, hereinafter called the grantor, to **Frank P. Boykin, a single man**, whose post office address is: 1733 Alta Vista Circle, Lakeland, Florida 33810, hereinafter called the grantee:

(Whenever used herein the term "grantor" and "grantee" include all the parties to this instrument and the heirs, legal representatives and assigns of individuals, and the successors and assigns of corporations)

Witnesseth, that the grantor, for and in consideration of the sum of Ten Dollars, ($10.00) and other valuable considerations, receipt whereof is hereby acknowledged, hereby grants, bargains, sells, aliens, remises, releases, conveys and confirms unto the grantee, all that certain land situate in Columbia County, Florida, viz:

Lot 43 of an unrecorded subdivision known as CARDINAL FARMS

A Parcel of land in Section 10, Township 6 South, Range 16 East, Columbia County, Florida, Being more particularly described as follows:

Commence at the Southeast Corner of Section 11, Township 6 South, Range 16 East, Columbia County, Florida and run thence South 88 Degrees 19'59" West along the South line of said Section 11 a distance of 5311.34 feet to the Southwest corner of Section 11; thence North 01 Degrees 22'42" West along the west line of Section 11, being also the East line of Section 10 a distance of 1330.05 feet to the Southeast corner of the North 1/2 of the Southeast 1/4 of Section 10; thence South 87 Degrees 55'20" West along the South line of the North 1/2 of the Southeast 1/4 of Section 10 a distance of 2650.10 feet to the Southwest corner of the North 1/2 of the Southeast 1/4 of Section 10; thence North 01 Degrees 21'04" West along the West line of the East 1/2 of Section 10 a distance of 3443.25 feet to the Point of Beginning; thence continue North 01 Degrees 21'04" West along said west line of the East 1/2 of Section 10 a Distance of 503.09 feet to a Point on the Southerly maintained Right-of-Way line of Old Ichetucknee Road; thence Easterly along said southerly maintained Right-of-Way line of Old Ichetucknee Road a distance of 872 feet, more or less; thence South 01 Degrees 21'04" East a distance of 495.08 feet; thence South 87 Degrees 37'11" West a distance of 872.14 feet to the Point of Beginning.

Less and Except

Herlong Road - Parcel 7

Commence at the Northeast corner of Section 10, Township 6 South, Range 16 East, Columbia County, Florida and run South 01 Degrees 22'59" East along the East line of Section 10 a distance of 47.76 feet to a point on a curve having a radius of 3859.72 feet and a central angle of 05 Degrees 37'46"; thence Westerly along the arc of said curve a distance of 379.22 feet to the point of tangency of said curve; thence South 87 Degrees 44' 55" West a distance of 543.73 feet; thence South 87 Degrees 57'35" West a distance of 854.07 feet to the Point of Beginning; thence continue South 87 Degrees 57'35" West a distance of 56.25 feet to the point of curve of a curve concave to the South having a radius of 8666.00 feet and a central angle of 02 Degrees 26'34", thence Westerly along the arc of said curve a distance of 369.46 feet to the point of reverse curve of a curve concave to the North having a radius of 8746.00 feet and a central angle of 02 Degrees 55'36"; thence continue Westerly along the arc of said curve a distance of 446.74 feet to the point of tangency of said curve, being also a point on the West line of Lot 43 of Cardinal Farms, an unrecorded subdivision; thence North 01 Degrees 21'47" West along said West line of Lot 43 of Cardinal Farms, an unrecorded subdivision, a distance of 40.15 feet to the Northwest corner of said Lot 43 of Cardinal Farms, an unrecorded subdivision; thence Easterly along the Southerly maintained Right-of-Way line of Herlong Road a distance of 872 feet, more or less, to the Northeast corner of said Lot 43 of Cardinal Farms, an unrecorded subdivision; thence South 01 Degrees 21' East along the East line of said Lot 43 of Cardinal Farms, an unrecorded subdivision, a distance of 21.69 feet to the Point of Beginning.

Said property is not the homestead of the Grantor(s) under the laws and constitution of the State of Florida in that neither Grantor(s) or any members of the household of Grantor(s) reside thereon.

Parcel ID Number: **R03815-143**

Subject to any valid and existing oil, gas or mineral right, reservation, royalty transfer or mineral deed conveying or reserving any interest in the oil, gas or minerals underlying said lands, or any portion thereof, heretofore executed and duly recorded in the public records of said county.

Together with all the tenements, hereditaments and appurtenances thereto belonging or in anywise appertaining.

Prepared by:

Heritage Title Services of North Florida, Inc.
201 Parshley Street S.W.
Live Oak, Florida 32064

File Number: 18-0398

To Have and to Hold, the same in fee simple forever.

And the grantor hereby covenants with said grantee that the grantor is lawfully seized of said land in fee simple; that the grantor has good right and lawful authority to sell and convey said land; that the grantor hereby fully warrants the title to said land and will defend the same against the lawful claims of all persons whomsoever; and that said land is free of all encumbrances except taxes accruing subsequent to December 31, 2017.

In Witness Whereof, the said grantor has signed and sealed these presents the day and year first above written.

Signed, sealed and delivered in our presence:

Lisa M Sadler
As to Both
Witness Printed Name LISA M Sadler

Phillip Wuerthele
As to Both
Witness Printed Name Phillip Wuerthele

State of PA
County of Allegheny

Gregory A McCaulley (Seal)
Gregory A. McCaulley
Address: 655 Horning Road, Bethel Park, Pennsylvania 15236

Kristin L Lazzaris (Seal)
Kristin L. Lazzaris
Address: 655 Horning Road, Bethel Park, Pennsylvania 15236

The foregoing instrument was acknowledged before me this 19th day of November, 2018, by Gregory A. McCaulley, a single man and Kristin L. Lazzaris, a single person, who is/are personally known to me or who has produced Drivers Licens as identification.

COMMONWEALTH OF PENNSYLVANIA
NOTARIAL SEAL
Lisa M. Sadler, Notary Public
South Park Twp., Allegheny County
My Commission Expires March 22, 2019

Lisa M Sadler
Notary Public
Print Name: LISA M Sadler
My Commission Expires: 3/22/2019

Columbia County Property Appraiser

Jeff Hampton

2018 Tax Roll Year
updated: 1/11/2019

Parcel: (<<) **10-6S-16-03815-143** (>>)

Aerial Viewer Pictometery Google Maps

Owner & Property Info

Result: 1 of 2

Owner	**BOYKIN FRANK P** 1733 ALTA VISTA CIRCLE LAKELAND, FL 33810		
Site	1983 SKYLINE LP, FORT WHITE		
Description*	LOT 43 CARDINAL FARMS UNREC: COMM AT SW COR OF SEC 11, RUN W 5311.34 FT, N 1330.05 FT, W 2650.10 FT, N 3443.25 FT FOR POB, CONT N 503.09 FT TO S R/W OF OLD ICHETUCKNEE RD, EAST ALONG R/W 872 FT, S 495.08 FT, W 872.14 FT FOR POB EX .64 AC FOR CO RD R/W TAKE more>>>		
Area	9.37 AC	S/T/R	11-6S-16
Use Code**	VACANT (000000)	Tax District	3

*The Description above is not to be used as the Legal Description for this parcel in any legal transaction.
**The Use Code is a FL Dept. of Revenue (DOR) code and is not maintained by the Property Appraiser's office. Please contact your city or county Planning & Zoning office for specific zoning information.

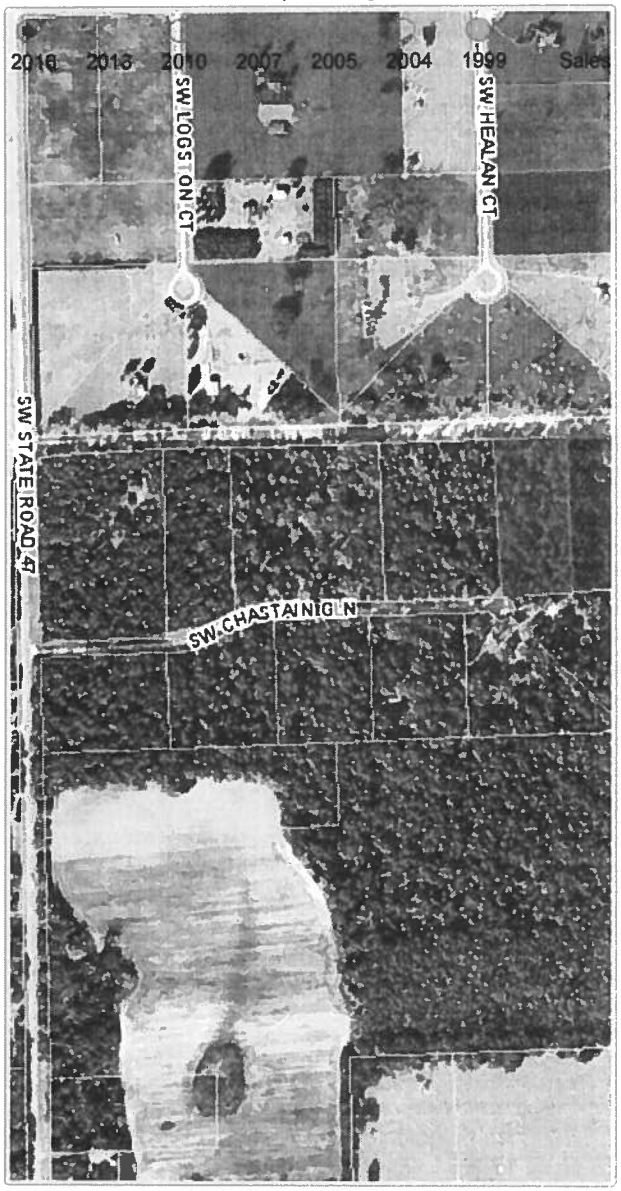

Property & Assessment Values

2018 Certified Values		2019 Working Values	
Mkt Land (1)	$41,734	Mkt Land (1)	$41,734
Ag Land (0)	$0	Ag Land (0)	$0
Building (0)	$0	Building (0)	$0
XFOB (0)	$0	XFOB (0)	$0
Just	$41,734	Just	$41,734
Class	$0	Class	$0
Appraised	$41,734	Appraised	$41,734
SOH Cap [?]	$0	SOH Cap [?]	$0
Assessed	$41,734	Assessed	$41,734
Exempt	$0	Exempt	$0
Total Taxable	county:$41,734 city:$41,734 other:$41,734 school:$41,734	Total Taxable	county:$41,734 city:$41,734 other:$41,734 school:$41,734

Sales History

Sale Date	Sale Price	Book/Page	Deed	V/I	Quality (Codes)	RCode
11/19/2018	$60,000	1373/0217	WD	V	Q	01
1/15/2016	$55,000	1307/2621	WD	V	Q	01
6/28/2006	$130,000	1088/1911	WD	V	Q	
6/27/2006	$100	1088/1910	WD	V	U	04
7/1/2004	$50,000	1032/1338	AG	V	Q	

Building Characteristics

Bldg Sketch	Bldg Item	Bldg Desc*	Year Blt	Base SF	Actual SF	Bldg Value
NONE						

Extra Features & Out Buildings (Codes)