DATE 11/06/2006

Columbia County Building Permit

This Permit Expires One Year From the Date of Issue

PERMIT
000025201

APPLICANT JOHN NORTHRUP PHONE 954.242.5001

ADDRESS 1818 NE 45TH COURT POMPANO BEACH FL 33064

OWNER JOHN H. NORTHRUP PHONE 954.242.5001

ADDRESS 186 SW TURKEY GLEN FT. WHITE FL 32038

CONTRACTOR JOHN H. NORTHRUP PHONE 954.242.5001

LOCATION OF PROPERTY 47-S TO WATSON,TURN W TO DREW FEAGLE,TURN S TO TURKEY GLEN,TURN E AND IT'S THE 1ST. LOT ON R.

TYPE DEVELOPMENT SFD/UTILITY ESTIMATED COST OF CONSTRUCTION 88350.00

HEATED FLOOR AREA 1767.00 TOTAL AREA 2620.00 HEIGHT 15.00 STORIES 1

FOUNDATION CONC WALLS FRAMED ROOF PITCH 4'12 FLOOR CONC

LAND USE & ZONING A-3 MAX. HEIGHT 35

Minimum Set Back Requirments: STREET-FRONT 30.00 REAR 25.00 SIDE 25.00

NO. EX.D.U. 0 FLOOD ZONE X DEVELOPMENT PERMIT NO.

PARCEL ID 32-5S-16-03745-108 SUBDIVISION TURKEY GLEN

LOT 8 BLOCK PHASE UNIT TOTAL ACRES 10.00

		OWNER		
Culvert Permit No.	Culvert Waiver	Contractor's License Number	Applicant/Owner/Contractor	
PRIVATE	06-0765-N	BLK	JTH	Y
Driveway Connection	Septic Tank Number	LU & Zoning checked by	Approved for Issuance	New Resident

COMMENTS: NOC ON FILE. 1 FOOT ABOVE ROAD.

Check # or Cash 2584

FOR BUILDING & ZONING DEPARTMENT ONLY

Temporary Power _____ date/app. by

Foundation _____ date/app. by

Monolithic _____ date/app. by (footer/Slab)

Under slab rough-in plumbing _____ date/app. by

Slab _____ date/app. by

Sheathing/Nailing _____ date/app. by

Framing _____ date/app. by

Rough-in plumbing above slab and below wood floor _____

Columbia County Building Permit Application

For Office Use Only Application # D610-83 Date Received 10/27 By JW Permit # 25201

Application Approved by - Zoning Official BRK Date 12.11.06 Plans Examiner OK STH Date 11-30-06

Flood Zone X Development Permit N/A Zoning A-3 Land Use Plan Map Category A-3

Comments

☑ NOC ☑ EH ☐ Deed or PA ☑ Site Plan ☑ State Road Info ☐ Parent Parcel # ☐ Development Permit

Fax 954-922-9931

Name Authorized Person Signing Permit John Northrup Phone 954.242.5001

Address 186 S.W. Turkey Glen Ft. White, FL 32038

Owners Name John H. Northrup Phone 954-242-5001

911 Address 186 SW Turkey Fort White FL 32038

Contractors Name John H. Northrup Phone 954-242-5001

Address 1818 NE 48th Ct. Pomp. Bch. Fla. 33064

Fee Simple Owner Name & Address –

Bonding Co. Name & Address –

Architect/Engineer Name & Address Keen Engineering & Survey Inc. 9263 CR 417 Lake Oak FL 32060

Mortgage Lenders Name & Address CASH

Circle the correct power company - FL Power & Light - Clay Elec. - Suwannee Valley Elec. - Progressive Energy

Property ID Number 32-5S-16-03745-108 Estimated Cost of Construction 80,000.00

Subdivision Name Turkey Crossing Lot 8 Block ____ Unit ____ Phase ____

Driving Directions 47 South to West on S.W. Watson Rd ~~straight to~~, south on Drew Eagle Ave then east on S.W. Turkey Glen, 1st lot on Right.

Type of Construction Wood Frame - SFD Number of Existing Dwellings on Property 0

Total Acreage 10 Lot Size ____ Do you need a - Culvert Permit or Culvert Waiver or Have an Existing Drive

Actual Distance of Structure from Property Lines - Front ~~625~~ 300' Side 230' Side 613 Rear 160'

Total Building Height 15' Number of Stories 1 Heated Floor Area 1767.52 TOTAL 2626 Roof Pitch 4/12

Application is hereby made to obtain a permit to do work and installations as indicated. I certify that no work or installation has commenced prior to the issuance of a permit and that all work be performed to meet the standards of all laws regulating construction in this jurisdiction.

OWNERS AFFIDAVIT: I hereby certify that all the foregoing information is accurate and all work will be done in compliance with all applicable laws and regulating construction and zoning.

WARNING TO OWNER: YOUR FAILURE TO RECORD A NOTICE OF COMMENCMENT MAY RESULT IN YOU PAYING TWICE FOR IMPROVEMENTS TO YOUR PROPERTY. IF YOU INTEND TO OBTAIN FINANCING, CONSULT WITH YOUR LENDER OR ATTORNEY BEFORE RECORDING YOUR NOTICE OF COMMENCEMENT.

Owner Builder or Authorized Person by Notarized Letter

Contractor Signature

Contractors License Number

Competency Card Number

NOTARY STAMP/SEAL

GALE TEDDER
MY COMMISSION # DD 338 [illegible]
EXPIRES: June 28, 2008
Bonded Thru Notary Public Underwriters

STATE OF FLORIDA
COUNTY OF COLUMBIA

Sworn to (or affirmed) and subscribed before me this 27th day of October 2006.

Personally known ____ or Produced Identification DL

Notary Signature

(Revised Sept. 2006)

JW LEFT MESSAGE 11.07.06

1. A PLAT, PLAN, OR DRAWING SHOWING THE PROPERTY LINES OF THE PARCEL.
2. LOCATION OF PLANNED RESIDENT OR BUSINESS STRUCTURE ON THE PROPERTY WITH DISTANCES FROM AT LEAST TWO OF THE PROPERTY LINES TO THE STRUCTURE (SEE SAMPLE BELOW).
3. LOCATION OF THE ACCESS POINT (DRIVEWAY, ETC.) ON THE ROADWAY FROM WHICH LOCATION IS TO BE ADDRESSED WITH A DISTANCE FROM A PARALLEL PROPERTY LINE AND OR PROPERTY CORNER (SEE SAMPLE BELOW).
4. TRAVEL OF THE DRIVEWAY FROM THE ACCESS POINT TO THE STRUCTURE (SEE SAMPLE BELOW).

SAMPLE:

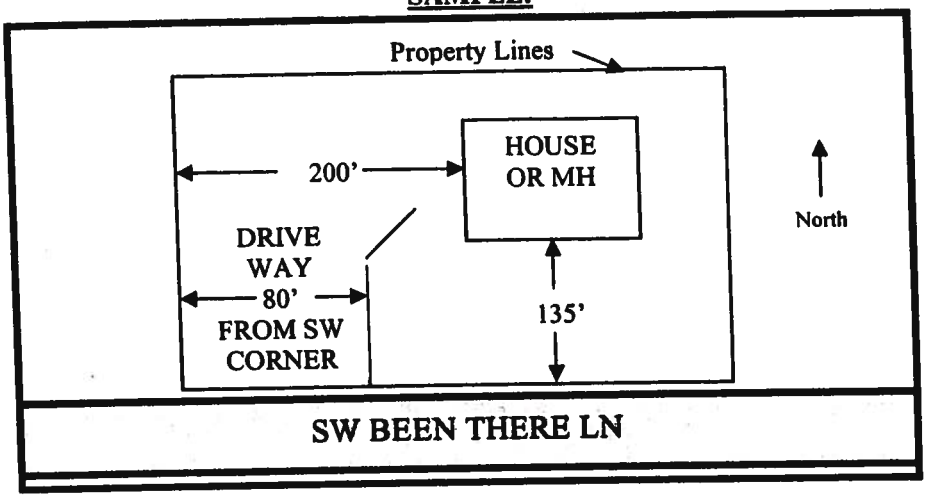

SITE PLAN BOX:

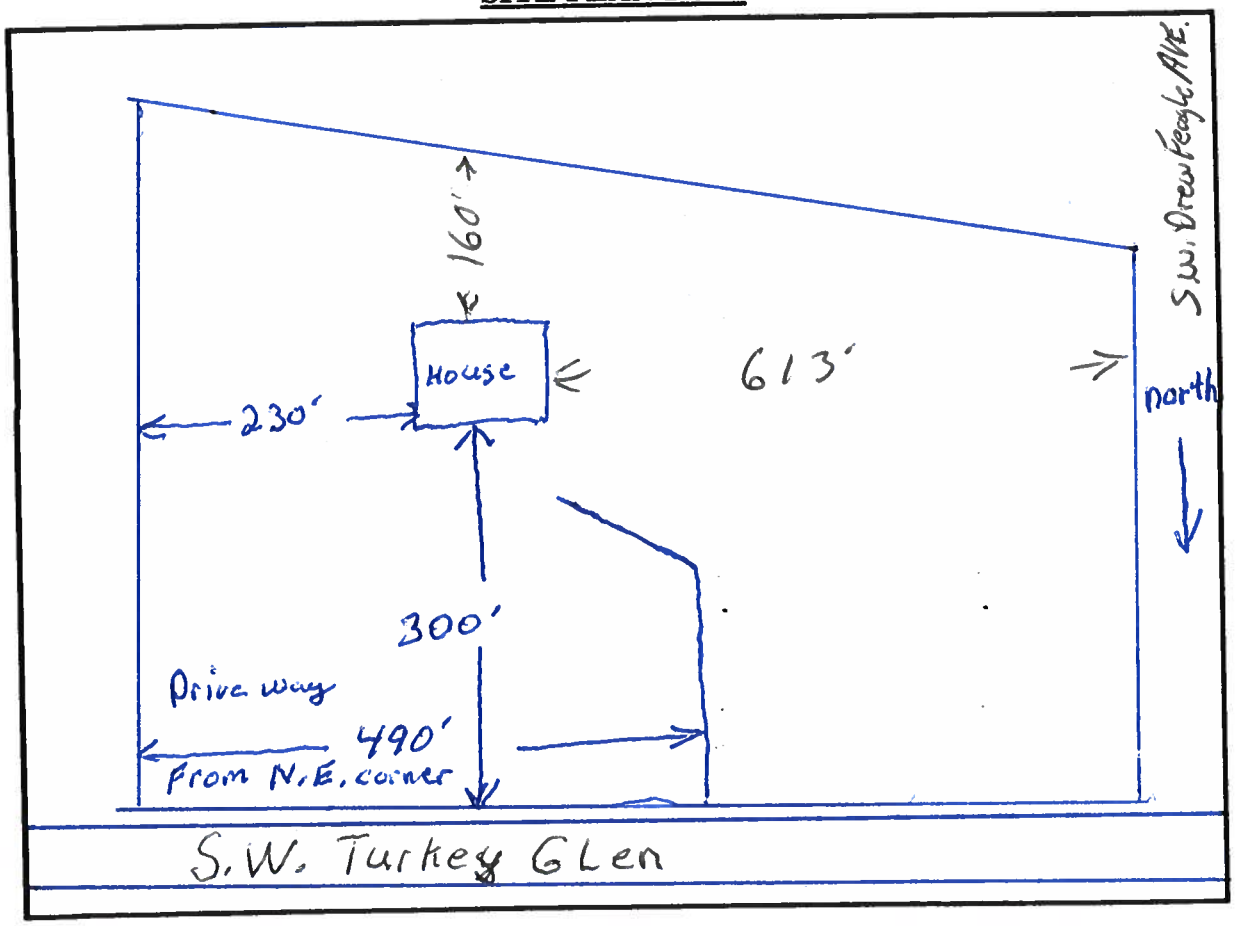

```
@ CAM112M01     S  CamaUSA Appraisal System                          Columbia County
10/13/2006 10:24  Legal Description Maintenance              51353  Land   001   *
Year T Property                            Sel                        AG     000
2006 R 32-5S-16-03745-108                                             Bldg   000
       LOT 8 TURKEY CROSSING UNREC                                    Xfea   000
       BKL PARTNERSHIP                                       51353    TOTAL       B

  1  AKA LOT 8 TURKEY CROSSING UNR:                                     2
  3                                                                     4
  5                                                                     6
  7                                                                     8
  9                                                                    10
 11                                                                    12
 13                                                                    14
 15                                                                    16
 17                                                                    18
 19                                                                    20
 21                                                                    22
 23                                                                    24
 25                                                                    26
 27                                                                    28
                                                   Mnt  8/12/2003 WANDA
F1=Task  F3=Exit  F4=Prompt  F10=GoTo  PgUp/PgDn  F24=More
```

NOTORIZED DISCLOSURE STATEMENT

FOR OWNER/BUILDER WHEN ACTING AS THER OWN CONTRACTOR AND CLAIMING EXEMPTION OF CONTRACTOR LICENSING REQUIREMENTS IN ACCORDANCE WITH FLORIDA STATUTES, ss. 489.103(7).

State law requires construction to be done by licensed contractors. You have applied for a permit under an exemption to that law. The exemption allows you, as the owner of your property, to act as your own contractor with certain restrictions even though you do not have a license. You must provide direct, onsite supervision of the construction yourself. You may build or improve a one-family or two-family residence or a farm outbuilding. You may also build or improve a commercial building, provided your costs do not exceed $75,000. The building or residence must be for your own use or occupancy. It may not be built or substantially improved for sale or lease. If you sell or lease a building you have built or substantially improved yourself within 1 year after the construction is complete, the law will presume that you built or substantially improved it for sale or lease, which is a violation of this exemption. You may not hire an unlicensed person to act as your contractor or to supervise people working on your building. It is your responsibility to make sure that people employed by you have licenses required by state law and by county or municipal licensing ordinances. You may not delegate the responsibility for supervising work to a licensed contractor who is not licensed to perform the work being done. Any person working on your building who is not licensed must work under your direct supervision and must be employed by you, which means that you must deduct F .I.C.A. and withholding tax and provide workers' compensation for that employee, all as prescribed by law. Your construction must comply with all applicable laws, ordinances, building codes, and zoning regulations.

TYPE OF CONSTRUCTION

(✓) Single Family Dwelling
( ) Farm Outbuilding
( ) Two-Family Residence
( ) Other_____

NEW CONSTRUCTION OR IMPROVEMENT

( ) New Construction
( ) Addition, Alteration, Modification or other Improvement

I John H. Northrup, have been advised of the above disclosure statement for exemption from contractor licensing as an owner/builder. I agree to comply with all requirements provided for in Florida Statutes ss.489.103(7) allowing this exception for the construction permitted by Columbia County Building Permit Number _____

Owner Builder Signature _____ Date 10/22/06

The above signer is personally known to me or produced identification DL

Notary Signature _____ Date 10-27-06

GALE TEDDER
MY COMMISSION # DD 333586
EXPIRES: June 28, 2008
Bonded Thru Notary Public Underwriters

(Stamp / Seal)

FOR BUILDING USE ONLY

I hereby certify that the above listed owner/builder has been notified of the disclosure statement in Florida Statutes ss 489.103(7).

Date 10-27-06 Building Official/Representative _____

COLUMBIA COUNTY 9-1-1 ADDRESSING

P. O. Box 1787, Lake City, FL 32056-1787
PHONE: (386) 758-1125 * FAX: (386) 758-1365 * Email: ron_croft@columbiacountyfla.com

Addressing Maintenance

To maintain the Countywide Addressing Policy you must make application for a 9-1-1 Address at the time you apply for a building permit. The established standards for assigning and posting numbers to all principal buildings, dwellings, businesses and industries are contained in Columbia County Ordinance 2001-9. The addressing system is to enable Emergency Service Agencies to locate you in an emergency, and to assist the United States Postal Service and the public in the timely and efficient provision of services to residents and businesses of Columbia County.

DATE REQUESTED: 10/18/2006 **DATE ISSUED:** 10/19/2006

ENHANCED 9-1-1 ADDRESS:

186 SW TURKEY GLN

FORT WHITE FL 32038

PROPERTY APPRAISER PARCEL NUMBER:

32-5S-16-03745-108

Remarks:

LOCATED ON LOT 8 TURKEY CROSSING UNR S/D

Address Issued By: _____

Columbia County 9-1-1 Addressing / GIS Department

NOTICE: THIS ADDRESS WAS ISSUED BASED ON LOCATION INFORMATION RECEIVED FROM THE REQUESTER. SHOULD, AT A LATER DATE, THE LOCATION INFORMATION BE FOUND TO BE IN ERROR, THIS ADDRESS IS SUBJECT TO CHANGE.

450

COLUMBIA COUNTY
9-1-1 ADDRESSING
APPROVED

FORM 600B-04

FLORIDA ENERGY EFFICIENCY CODE FOR BUILDING CONSTRUCTION

Residential Component Prescriptive Method B

NORTH 1 2 3

Compliance with Method B of Subchapter 6 of the Florida Energy Efficiency Code may be demonstrated by the use of Form 600B for single-and multiple-family residences of three stories or less in height, and additions to existing residential buildings. To comply, a building must meet or exceed all of the energy efficiency prescriptives in any one of the prescriptive component packages and comply with the prescriptives listed in this form. An alternative method is provided for additions of 600 square feet or less by use of Form 600C. If a building does not comply with this method, it may still comply under other sections in Chapter 6 of the code.

PROJECT NAME: AND ADDRESS:	JOHN NORTHRUP	BUILDER: OWNER Build	
		PERMITTING OFFICE: Columbia	CLIMATE ZONE: 1 ☐ 2 ☐ 3 ☑
OWNER:		PERMIT NO.: 05 2011	JURISDICTION NO.: 22 1000

1. New construction including additions which incorporate any of the following features cannot comply using this method: steel stud walls, single assembly roof/ceiling construction, or skylights or other nonvertical roof glass.
2. Choose one of the component packages "A" through "E" from Table 6B-1 by which you intend to comply with the code. Circle the column of the package you have choosen.
3. Fill in all the applicable spaces of the "To Be Installed" column on "Table 6B-1 with the information requested. All "To Be Installed" values must be equal to or more efficient than the required levels.
4. Complete page 1 based on the "To Be Installed" column information.
5. Read "Minimum Requirements for All Packages," Table 6B-2 and check each box to indicate your intent to comply with all applicable items.
6. Read, sign and date the "Prepared By" certification statement at the bottom of page 1. The owner or owner's agent must also sign and date the form.

	Please Print	CK
1. Compliance package chosen (A-E)	1. A	
2. New construction or addition	2. NEW	
3. Single-family detached or multiple-family attached	3. SF	
4. If multiple-family–No. of units covered by this submission	4. N/A	
5. Is this a worst case? (yes/no)	5. NO	
6. Conditioned floor area (sq. ft.)	6. 1768	
7. Predominant eave overhang (ft.)	7. 1.34 16"	
8. Glass type and area:	Single Pane / Double Pane	
a. Clear glass	8a. – sq. ft. / 153 sq. ft.	
b. Tint, film or solar screen	8b. – sq. ft. / – sq. ft.	
9. Percentage of glass to floor area	9. 8.7 %	
10. Floor type, area or perimeter, and insulation:		
a. Slab-on-grade (*R*-value)	10a R = 0 / 222 lin. ft.	
b. Wood, raised (*R*-value)	10b. R = – / – sq. ft.	
c. Wood, common (*R*-value)	10c. R = – / – sq. ft.	
d. Concrete, raised (*R*-value)	10d. R = – / – sq. ft.	
e. Concrete, common (*R*-value)	10e. R = – / – sq. Ft.	
11. Wall type, area and insulation:		
a. Exterior: 1. Masonry (Insulation R-value)	11a-1 R = – / – sq. ft.	
2. Wood frame (Insulation *R*-value)	11a-2 R = 11 / 1776 sq. ft.	
b. Adjacent: 1. Masonry (Insulation *R*-value)	11b-1 R = – / – sq. ft.	
2. Wood frame (Insulation *R*-value)	11b-2 R = – / – sq. ft.	
12. Ceiling type, area and insulation:		
a. Under attic (Insulation *R*-value)	12a. R = 30 sq. ft. 1768	
b. Single assembly (Insulation *R*-value)	12b. R = – / – sq. ft.	
13. Air distribution system: Duct insulation, location	13. R = 6 ATTIC	
Test report (attach if required)		
14. Cooling system:	14a. Type: CENTRAL	
(Types: central, room unit, package terminal A.C., gas, none)	14b. SEER/EER: 12.00	
	14c. Capacity: 42000	
15. Heating system:	15a. Type: HEAT PUMP	
(Types: heat pump, elec. strip, nat. gas, LP-Gas, gas h.p., room or PTAC, none)	15b. HSPF/COP/AFUE: 8.35	
	15c. Capacity: 45500	
16. Hot water system:	16a. Type: ELECTRIC	
(Types: elec., nat. gas, LP-gas, solar, heat rec., ded. heat pump, other, none)	16b. EF: 0.92	

I hereby certify that the plans and specifications covered by the calculation are in compliance with the Florida Energy Code.

PREPARED BY: Curtis Keen DATE: 10/12/06

I hereby certify that this building is in compliance with the Florida Energy Code:

OWNER AGENT: [illegible] DATE: 10/13/06

Review of plans and specifications covered by this calculation indicates compliance with the Florida Energy Code. Before construction is completed, this building will be inspected for compliance in accordance with Section 553.908, F.S.

BUILDING OFFICIAL: _____

DATE: _____

TABLE 6B-1 — MINIMUM REQUIREMENTS — Climate Zones 1 2 3

COMPONENTS		PACKAGES FOR NEW CONSTRUCTION A	B	C	D	E	TO BE INSTALLED
GLASS	Max. % of Glass to Floor Area	15%	15%	20%	20%	25%	8.7 %
	Type	Double Clear (DC)	Double Clear (DC)	Double Clear (DC)	Double Clear (DC)	Double Tint (DT)	DC: ☒ DT: ☐
	Overhang	1'4"	2'	2'	2'	2'	1'-4" FEET
WALLS	Masonry	EXTERIOR AND ADJACENT MASONRY WALLS R-5 COMMON MASONRY WALLS R-3 EACH SIDE.					EXT: R = — ADJ: R = — COM: R = —
	Wood Frame	EXTERIOR, ADJACENT, AND COMMON WOOD-FRAME WALLS R-11					EXT: R = 11 ADJ: R = — COM: R = —
CEILINGS		R-30 (NO SINGLE ASSEMBLY CEILINGS ALLOWED)	R-30	R-30	R-30	R-30	UNDER ATTIC: R= 30 COMMON: R: —
FLOORS	Slab-On-Grade	R-0					R = 0
	Raised Wood	R-19 (ONLY STEM WALL CONSTRUCTION ALLOWED EXCEPT PACKAGE C)					R = —
	Raised Concrete	R-7					R = —
DUCTS		R-6	R-6	R-6, TESTED	R-6	R-6, TESTED	R = 6 COND. ☐
SPACE COOLING (SEER)		12.0	10.5	12.0	11.0	12.0	SEER = 12.0
HEAT	Elect. (HSPF)	7.9	7.1	7.4	7.4	7.4	HSPF = 8.35
	Gas/Oil (AFUE)	MINIMUM OF .73 (Direct heating) or .78 (Central)					AFUE = —
HOT WATER SYSTEM	Electric Resistance**	EF .92	NOT ALLOWED (SEE BELOW)	EF .92	NOT ALLOWED (SEE BELOW)	EF .92	EF = 0.92
	Gas & Oil**	MINIMUM EF OF .59				NATURAL GAS ONLY (SEE BELOW)	EF = —
	Other	Any of the following are allowed: dedicated heat pump, heat recovery unit or solar system.					DHP: ☐ EF = — HRU: ☐ SOLAR: ☐ EF = —

* Single package units minimum SEER=9.7, HSPF = 6.6.

** Minimum efficiencies for gas and electric hot water systems apply to 40 gallon water heaters. Refer to Table 612.1 ABC.3.2 for minimum code efficiencies for oil water heaters and other sizes.

DESCRIPTION OF BUILDING COMPONENTS LISTED

Percent of Glass to Floor Area: This percentage is calculated by dividing the total of all glass areas by the total conditioned floor area.

Overhang: The overhang is the distance the roof or soffit projects out horizontally from the face of the glass. All glass areas shall be under an overhang of at least the prescribed length with the following exceptions: 1) glass on the gabled ends of a house and 2) the glass in the lower stories of a multistory house.

Wall, Ceiling and Floor Insulation Values: The *R*-values indicated represent the minimum acceptable insulation level added to the structural components of the wall, ceiling or floor. The *R*-value of the structural building materials shall not be included in this calculation. "Common" components are those separating conditioned tenancies in a multiple-family building. "Adjacent" components separate conditioned space from unconditioned but enclosed space. "Exterior" components separate conditioned space from unconditioned and unenclosed space.

Floor: Slab-on-grade floors without edge insulation are acceptable. Raised wood floors shall have continuous stem walls with insulation placed on the stem wall or under the floor except Package C.

Ducts: "TESTED" shall mean the ducts have less than 5% leakage based on a certified test report by a state-approved tester.

Space Cooling System: Cooling systems shall have a Seasonal Energy Efficiency Ratio (SEER) for central units or Energy Efficiency Ratio (EER) for room units or PTACs equal to or greater than the prescribed value.

Electric Space Heating Option: Heat pump systems shall be rated with a Heating Seasonal Performance Factor (HSPF) equal to or greater than the prescribed HSPF. Heat pump systems may contain electric strip backups meeting the criteria of Section 608.1.ABC.3.2.1.2. No electric resistance space heat is allowed for these packages.

Electric Resistance Hot Water Option: For packages designated "Not Allowed," an electric resistance hot water system may be installed only in conjunction with one of the "Other Hot Water System Options." See below.

Other Hot Water System Options: Any dedicated heat pump, heat recovery unit, or solar hot water system may be installed. Solar systems must have an EF of 1.5 or higher. Electric resistance systems having and EF of .92 or greater, or natural gas systems with EF .59 or greater may be used in conjunction with these systems.

TABLE 6B-2 MINIMUM REQUIREMENTS FOR ALL PACKAGES

COMPONENTS	SECTION	REQUIREMENTS	CHECK
Exterior Joints & Cracks	606.1	To be caulked, gasketed, weather-stripped or otherwise sealed.	✓
Exterior Windows & Doors	606.1	Max .3 cfm/sq.ft. window area; .5 cfm/sq.ft. door area.	✓
Sole & Top Plates	606.1	Sole plates and penetrations through top plates of exterior walls must be sealed.	✓
Recessed Lighting	606.1	Type IC rated with no penetrations (two alternatives allowed).	N/A
Multistory Houses	606.1	Air barrier on perimeter of floor cavity between floors.	N/A
Exhaust Fans	606.1	Exhaust fans vented to unconditioned space shall have dampers, except for combustion devices with integral exhaust ductwork.	✓
Water Heaters	612.1	Comply with efficiency requirements in Table 612.1.ABC.3.2. Switch or clearly marked circuit breaker electric or cutoff (gas) must be provided. External or built-in heat trap required for vertical pipe risers.	✓
Swimming Pools & Spas	612.1	Spas & heated pools must have covers (except solar heated). Noncommercial pools must have a pump timer. Gas spa & pool heaters must have minimum thermal efficiency of 78%.	N/A
Hot Water Pipes	612.1	Insulation is required for hot water circulating systems (including heat recovery units).	N/A
Shower Heads	612.1	Water flow must be restricted to no more than 2.5 gallons per minute at 80 psig.	✓
HVAC Duct Construction, Insulation & Installation	610.1	All ducts, fittings, mechanical equipment and plenum chambers shall be mechanically attached, sealed, insulated and installed in accordance with the criteria of Section 610.1. Ducts in attics must be insulated to a minimum of R-6.	✓
HVAC Controls	607.1	Separate readily accessible manual or automatic thermostat for each system.	✓

STATE OF FLORIDA
DEPARTMENT OF HEALTH

APPLICATION FOR ONSITE SEWAGE DISPOSAL SYSTEM CONSTRUCTION PERMIT

Permit Application Number 06-0765N

PART II - SITE PLAN

Scale: Each block represents 5 feet and 1 inch = 50 feet.

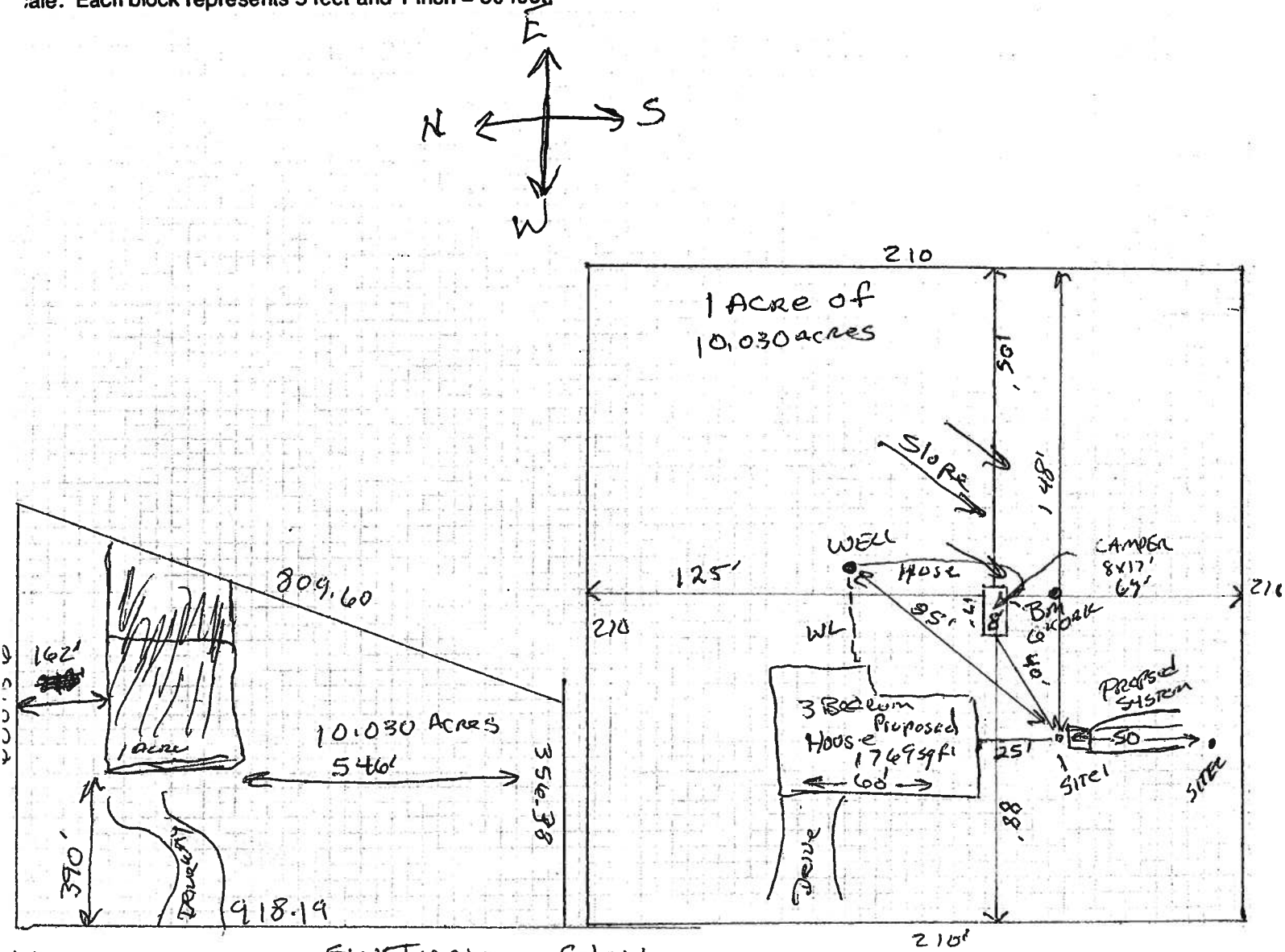

Notes: SW Turkey Glen

BLK Partnership

John Northrup (32-5S-16-0375-108)

Lot 8 Turkey Crossing

Site Plan submitted by: [signature] Signature — Agent Title

Plan Approved ✓ Not Approved _____ Date 9/16

By [signature] Columbia County Health Department

ALL CHANGES MUST BE APPROVED BY THE COUNTY HEALTH DEPARTMENT

LYNCH WELL DRILLING, INC.

173 SW Tustenuggee Ave
Lake City, FL. 32025
Phone 386-752-6677
Fax 386-752-1477

Building Permit # Turkey Crossing Lot 8 Owner's Name John Northrup

Well Depth 80 Ft. Casing Depth 65 Ft. Water Level 29 Ft.

Casing Size 4 inch Steel Pump Installation: Deep Well Submersible

Pump Make Aermotor Pump Model 520-100 HP 1

System Pressure (PSI) _____ On 30 Off 50 Average Pressure 40

Pumping System GPM at average pressure and pumping level 20 (GPM)

Tank Installation: Bladder /Galvanized Make Challenger
Model PC 248 Size 81

Tank Draw-down per cycle at system pressure 25.1 gallons

I HEREBY VERTIFY THAT THIS WATER WELL SYSTEM HAS BEEN INSTALLED AS PER THE ABOVE INFORMATION.

Linda Newcomb
Signature

Linda Newcomb
Print Name

2609
License Number

10-16-06
Date Well Drilled 8-23-06

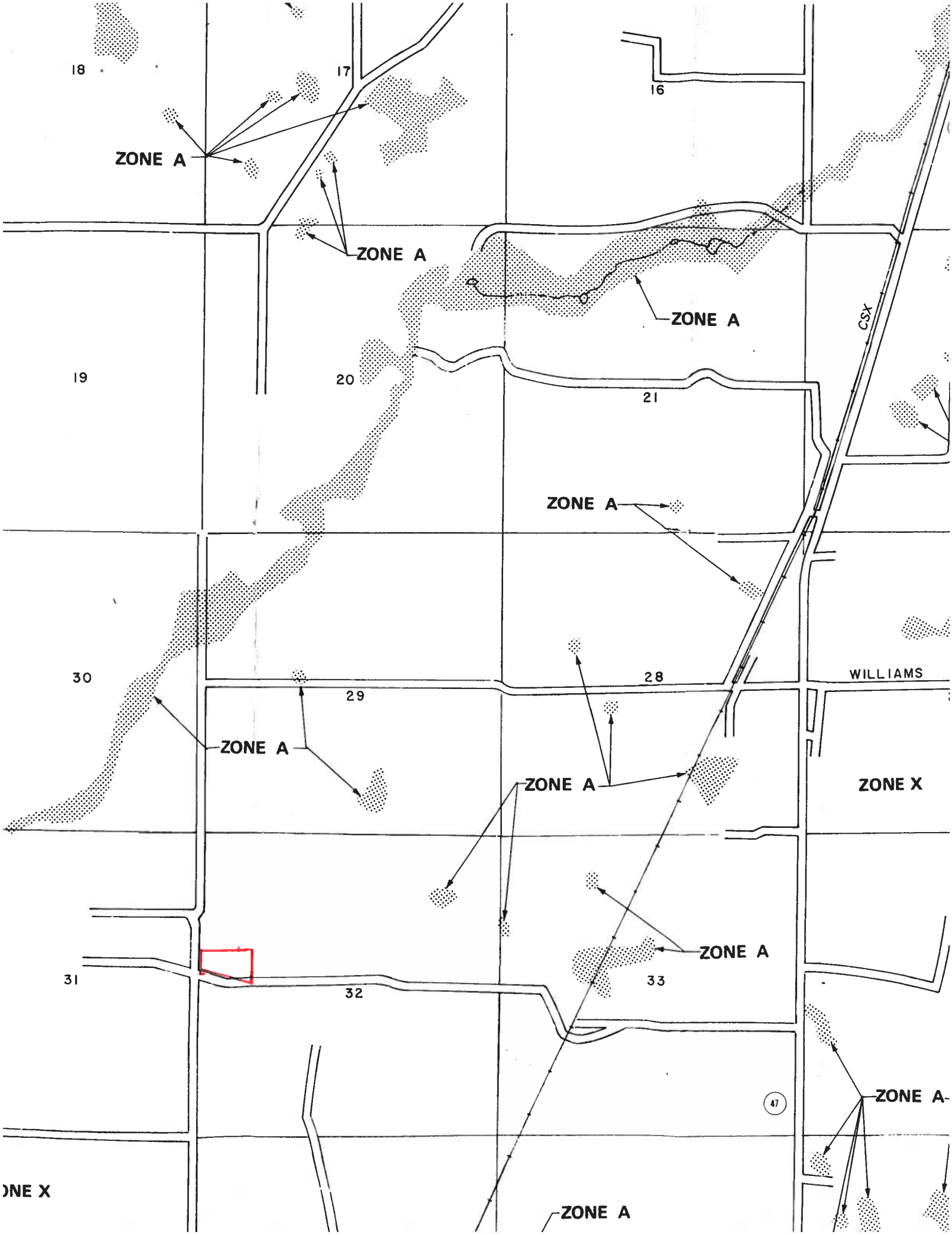
18
17
16
ZONE A
ZONE A
ZONE A
CSX
19
20
21
ZONE A
30
29
28
WILLIAMS
ZONE A
ZONE A
ZONE X
ZONE A
31
32
33
47
ZONE A
ZONE A
ZONE A

FROM :COLUMBIA CO BUILDING + ZONI

Post-it® Fax Note 7671	Date 10-16-06	# of pages ▶ 1
To Janice Williams	From Sue Lane	
Co./Dept. Bldg & Zoning	Co. BKL Partnership	
Phone # 758-1008	Phone # 752-4339	
Fax # 758-2160	Fax # 752-1171	

M P1

STATE OF FLORIDA
COUNTY OF COLUMBIA

AFFIDAVIT

This is to certify that I, (We), BKL Partnership Sue Lane, General Partner, as the seller, by an **Agreement for Deed**, of the below described property:

Tax Parcel No. 32-5s-16-03745-108

Subdivision (Name, lot, Block, Phase) Turkey Crossing Lot #8

Give my permission for single family home to place a
(Mobile Home / Travel Trailer / Single Family Home)

I (We) understand that this could result in an assessment for solid waste and fire protection services levied on this property.

BKL Partnership
Sue D Lane
(1) Seller Signature

(2) Seller Signature

Sworn to and subscribed before me this 16th day of October, 2006 This (These) person (s) are personally known to me or produced ID _____.
(Type)

Connie B. Roberts
Notary Public Signature
State of Florida
My commission expires: _____

Connie B. Roberts
Notary Printed Name

CONNIE B. ROBERTS
MY COMMISSION # DD 453230
EXPIRES: July 20, 2009
Bonded Thru Notary Public Underwriters

NOTICE OF COMMENCEMENT FORM
COLUMBIA COUNTY, FLORIDA

*****THIS DOCUMENT MUST BE RECORDED AT THE COUNTY CLERKS OFFICE BEFORE YOUR FIRST INSPECTION.*****

THE UNDERSIGNED hereby gives notice that improvement will be made to certain real property, and in accordance with Chapter 713, Florida Statutes, the following information is provided in this Notice of Commencement.

Tax Parcel ID Number 32-5s-16-03745-108

PERMIT NUMBER _____

1. **Description of property: (legal description of the property and street address or 911 address)**
   Lot 8 Turkey Crossing UNrecorded
   186 SW. Turkey Glen FT. White

2. **General description of improvement:** New single Family Home 1 story

3. **Owner Name & Address** [illegible] 1818 NE 48th Ct Pompano Bch Fla
   Interest in Property Home Owner

4. **Name & Address of Fee Simple Owner (if other than owner):** X N.A.

5. **Contractor Name** John Northrup **Phone Number** 954.242-5001
   Address 1818 NE. 48th Ct. Pomp. Bch. Fla.

6. **Surety Holders Name** _____ **Phone Number** _____
   Address _____
   Amount of Bond _____

7. **Lender Name** _____ **Phone Number** _____
   Address _____

8. **Persons within the State of Florida designated by the Owner upon whom notices or other documents may be served as provided by section 718.13 (1)(a) 7; Florida Statutes:**
   Name N.A. **Phone Number** _____
   Address _____

9. **In addition to himself/herself the owner designates** N.A. _____ **of** _____ **to receive a copy of the Lienor's Notice as provided in Section 713.13 (1) – (a) 7. Phone Number of the designee** _____

10. **Expiration date of the Notice of Commencement (the expiration date is 1 (one) year from the date of recording, (Unless a different date is specified)** 10/27/07

NOTICE AS PER CHAPTER 713, Florida Statutes:
The owner must sign the notice of commencement and no one else may be permitted to sign in his/her stead.

Sworn to (or affirmed) and subscribed before 27th **day of** October, **20** 06

Signature of Owner

GALE TEDDER
MY COMMISSION # DD 333560
EXPIRES: June 26, 2008
Bonded Thru Notary Public Underwriters

NOTARY STAMP/SEAL

Signature of Notary

Inst:2006025629 Date:10/27/2006 Time:13:22
DC,P.DeWitt Cason,Columbia County B:1100 P:1076

CERTIFICATE OF OCCUPANCY

COLUMBIA COUNTY, FLORIDA

Department of Building and Zoning Inspection

This Certificate of Occupancy is issued to the below named permit holder for the building and premises at the below named location, and certifies that the work has been completed in accordance with the Columbia County Building Code.

Parcel Number 32-5S-16-03745-108 **Building permit No.** 000025201

Use Classification SFD/UTILITY **Fire:** 43.16

Permit Holder JOHN H. NORTHRUP **Waste:** 67.00

Owner of Building JOHN H. NORTHRUP **Total:** 110.16

Location: 186 SW TURKEY GLEN, FT. WHITE, FL

Date: 06/12/2007

Harry Dicks

Building Inspector

POST IN A CONSPICUOUS PLACE
(Business Places Only)

KEEN ENGINEERING & SURVEYING, INC.
9263 COUNTY ROAD 417
LIVE OAK, FLORIDA 32060
386/362-4787

25201

November 22, 2006

Columbia County Building Department
John Northrup

RE: NORTHRUP RESIDENCE FLOOR

The concrete floor for the John Northrup residence will have a 4" thick concrete floor and not a 5" thick floor as specified on the plans. Wire mesh or fibermesh at the owner's option is to be used.

If additional information is required, please advise.

Curtis E. Keen

Curtis E. Keen
PE #23836
EB #3761

From: The Columbia County Building & Zoning Department
Plan Review
135 NE Hernando Av.
P.O. Box 1529
Lake City Florida 32056-1529

Reference to a building permit application Number: **0610-83**

Applicant John Northrup, contractor Owner/Builder, Owners, John Northrup
Property ID 08-7s-17-09954-007

On the date of October 30, 2006 application 0610-83 and plans for construction of single family dwelling were reviewed and the following information or alteration to the plans will be required to continue processing this application. If you should have any question please contact the above address. or contact phone number (386) 758-1163 or fax any information to (386) 754-7088.

Please include application number 0610-83 and when making reference to this application.

This is a plan review for compliance with the Florida Residential Code 2004 only and doesn't make any consideration toward the land use and zoning requirements.

Questions 1, 2, 3, 4, 6, 7
I have read all of these questions and will comply.
Question 5 I will get a letter from Mr. Keen.

10/30/06

Thank you
John Northrup

KEEN ENGINEERING & SURVEYING, INC.
9263 COUNTY ROAD 417
LIVE OAK, FLORIDA 32060
386/362-4787

October 31, 2006

Joe Haltiwanger
Columbia County Building Department
P.O. Drawer 1529
Lake City, FL 32056

RE: NORTHRUP RESIDENCE

The header detail on the Northrup plans is for window and door headers and NOT the garage door beam. Two 1.75" x 9.25" LVL are sufficient or Mr. Northrup prefers to frame a 6" garage wall in lieu of the 4" on the plans. If a six inch wall is used, three 2x12 s.y.p. with two ½" plywood layers sandwiched for the garage door header will be sufficient to meet Section 1600 of the 2004 Florida Building Code for a 110 MPH wind load.

If additional information is required, please advise.

Curtis E. Keen

Curtis E. Keen, PE #23836
Eng. Bus. #3761

Permit Application number
0610-83

10/31/06

From: The Columbia County Building & Zoning Department
Plan Review
135 NE Hernando Av.
P.O. Box 1529
Lake City Florida 32056-1529

Reference to a building permit application Number: 0610-83

Applicant John Northrup, contractor Owner/Builder, Owners, John Northrup
Property ID 08-7s-17-09954-007

On the date of October 30, 2006 application 0610-83 and plans for construction of single family dwelling were reviewed and the following information or alteration to the plans will be required to continue processing this application. If you should have any question please contact the above address, or contact phone number (386) 758-1163 or fax any information to (386) 754-7088.

Please include application number 0610-83 and when making reference to this application.

This is a plan review for compliance with the Florida Residential Code 2004 only and doesn't make any consideration toward the land use and zoning requirements.

1. Per the plans an attic access pull down stair device will be installed in the garage ceiling. For this device to comply with sections R309.1 and R309.2 of the Florida Residential Building code which requires that the garage shall be separated from the residence. Openings from a private garage directly into a room used for sleeping purposes shall not be permitted. Other openings between the garage and residence shall be equipped with solid wood doors not less than 13/8 inches (35 mm) in thickness, solid or honeycomb core steel doors not less than 13/8 inches (35 mm) thick, or 20-minute fire-rated doors. Please provide the product information from the pull down stairs manufacture which verifies compliance with this code requirement.

2. Per the plans several appliances will be located in the garage area which could be within the pathway of an automobile when parking in the garage. To prevent mechanical damage to these appliances as required by sections 303.4 of the Florida Mechanical Code, Protection from damage: Appliances shall not be installed in a location where subject to mechanical damage unless protected by approved barriers. Show the method to be used to protect these appliances.

3. The plans show the placement of a air handling unit in the garage. Section R309.1.1 of the Florida Residential Building code which requires that ducts in the garage and ducts penetrating the walls or ceilings separating the dwelling from the garage shall be constructed of a minimum No. 26 gage (0.48 mm) sheet steel or other approved material and shall have no openings into the garage. Show the method to protect these ducts.

4. The entry door (3068 insul.) from the garage into the residence is required by sections R309.1 of the Florida Residential Building code to be equipped with solid wood doors not less than 13/8 inches (35 mm) in thickness, solid or honeycomb core steel doors not less than 1and 3/8 inches (35 mm) thick, or 20-minute fire-rated doors. Please verify on the plans compliance of this code requirement.

5. The garage has a sixteen foot opening for an overhead door please have Mr. Keen engineer the required header for support of the bearing trusses and show the attachment method of this header to the foundation and shearwall.

6. Section R322.1.1 of the Florida Residential Code requires that all new single-family houses, duplexes, triplexes, condominiums and townhouses shall provide at least one bathroom, located with maximum possible privacy, where bathrooms are provided on habitable grade levels, with a door that has a 29-inch (737 mm) clear opening. However, if only a toilet room is provided at grade level, such toilet rooms shall have a clear opening of not less than 29 inches (737 mm). In one bathroom show the required door opening on the plans.

7. The electrical panel is show to be located within the garage area, verify comply with the following requirements of the National Electrical Code. A means of disconnect that provides overcurrent protection shall be installed on the exterior of structures to serve as a disconnecting means from the utility company electrical service. Conductors used from the exterior disconnecting means to a panel or sub panel shall have four-wire conductors, of which one conductor shall be used as an equipment ground.

Thank You:

Joe Haltiwanger
Plan Examiner
Columbia County Building
Department

PRODUCT APPROVAL SPECIFICATION SHEET

Location:_____ **Project Name:**_____

As required by Florida Statute 553.842 and Florida Administrative Code 9B-72, please provide the information and the product approval number(s) on the building components listed below if they will be utilized on the construction project for which you are applying for a building permit on or after April 1, 2004. We recommend you contact your local product supplier should you not know the product approval number for any of the applicable listed products. More information about statewide product approval can be obtained at www.floridabuilding.org

Category/Subcategory	Manufacturer	Product Description	Approval Number(s)
A. EXTERIOR DOORS			
1. Swinging	Masonite	6 Panel	FL 18
2. Sliding			
3. Sectional			
4. Roll up			
5. Automatic	Amarr	Garage Door Sectional	FL697
6. Other			
B. WINDOWS			
1. Single hung	Betterbuilt	Aluminum	FL 663
2. Horizontal Slider			
3. Casement			
4. Double Hung			
5. Fixed			
6. Awning			
7. Pass -through			
8. Projected			
9. Mullion			
10. Wind Breaker			
11 Dual Action			
12. Other			
C. PANEL WALL			
1. Siding	Kaycan	Vinyl	FL 1139
2. Soffits	Kaycan	Vinyl	FL 1146
3. EIFS			
4. Storefronts			
5. Curtain walls			
6. Wall louver			
7. Glass block			
8. Membrane			
9. Greenhouse			
10. Other			
D. ROOFING PRODUCTS			
1. Asphalt Shingles	Tamko		FL 623
2. Underlayments			
3. Roofing Fasteners			
4. Non-structural Metal Rf			
5. Built-Up Roofing			
6. Modified Bitumen			
7. Single Ply Roofing Sys			
8. Roofing Tiles			
9. Roofing Insulation			
10. Waterproofing			
11. Wood shingles /shakes			
12. Roofing Slate			

Union Corrugating Metal Roof FL 72

James Hardie Hardie Board FL 887.5

Website: www.tlcpermits.org

Effective April 1, 2004

Summary Energy Code Results

Residential Whole Building Performance Method A

John Northrup

Project Title:
John Northrup

Code Only
Professional Version
Climate: North

10/17/2006

Building Loads			
Base		As-Built	
Summer:	**22421 points**	Summer:	**19524 points**
Winter:	**15214 points**	Winter:	**17140 points**
Hot Water:	**7273 points**	Hot Water:	**7273 points**
Total:	**44908 points**	Total:	**43936 points**

Energy Use			
Base		As-Built	
Cooling:	**9565 points**	Cooling:	**5783 points**
Heating:	**9545 points**	Heating:	**8747 points**
Hot Water:	**7905 points**	Hot Water:	**7905 points**
Total:	**27015 points**	Total:	**22436 points**

PASS
e-Ratio: 0.83

FORM 600A-2004

EnergyGauge® 4.21

FLORIDA ENERGY EFFICIENCY CODE FOR BUILDING CONSTRUCTION

Florida Department of Community Affairs

Residential Whole Building Performance Method A

Project Name:	**John Northrup**	Builder:	
Address:		Permitting Office:	COLUMBIA
City, State:	,	Permit Number:	
Owner:	**John Northrup**	Jurisdiction Number:	221000
Climate Zone:	**North**		

1. New construction or existing	New	
2. Single family or multi-family	Single family	
3. Number of units, if multi-family	1	
4. Number of Bedrooms	3	
5. Is this a worst case?	No	
6. Conditioned floor area (ft²)	1767.52 ft²	
7. Glass type[1] and area: (Label reqd. by 13-104.4.5 if not default)		
a. U-factor: (or Single or Double DEFAULT)	Description Area 7a. (Dble Default) 174.0 ft²	
b. SHGC: (or Clear or Tint DEFAULT)	7b. (Clear) 174.0 ft²	
8. Floor types		
a. Slab-On-Grade Edge Insulation	R=0.0, 220.0(p) ft	
b. N/A		
c. N/A		
9. Wall types		
a. Frame, Wood, Exterior	R=11.0, 1425.5 ft²	
b. N/A		
c. N/A		
d. N/A		
e. N/A		
10. Ceiling types		
a. Under Attic	R=30.0, 1767.5 ft²	
b. N/A		
c. N/A		
11. Ducts		
a. Sup: Unc. Ret: Con. AH: Interior	Sup. R=6.0, 50.0 ft	
b. N/A		

12. Cooling systems		
a. Central Unit	Cap: 35.0 kBtu/hr SEER: 13.00	
b. N/A		
c. N/A		
13. Heating systems		
a. Electric Heat Pump	Cap: 35.0 kBtu/hr HSPF: 7.70	
b. N/A		
c. N/A		
14. Hot water systems		
a. Electric Resistance	Cap: 50.0 gallons EF: 0.92	
b. N/A		
c. Conservation credits (HR-Heat recovery, Solar DHP-Dedicated heat pump)		
15. HVAC credits (CF-Ceiling fan, CV-Cross ventilation, HF-Whole house fan, PT-Programmable Thermostat, MZ-C-Multizone cooling, MZ-H-Multizone heating)		

Glass/Floor Area: 0.10

Total as-built points: 22436
Total base points: 27015

PASS

I hereby certify that the plans and specifications covered by this calculation are in compliance with the Florida Energy Code.

PREPARED BY: N Hopkins

DATE: 10/17/06

I hereby certify that this building, as designed, is in compliance with the Florida Energy Code.

OWNER/AGENT: _____

DATE: _____

Review of the plans and specifications covered by this calculation indicates compliance with the Florida Energy Code. Before construction is completed this building will be inspected for compliance with Section 553.908 Florida Statutes.

GREAT SEAL OF THE STATE OF FLORIDA — IN GOD WE TRUST

BUILDING OFFICIAL: _____

DATE: _____

1 Predominant glass type. For actual glass type and areas, see Summer & Winter Glass output on pages 2&4.

Code Compliance Checklist

Residential Whole Building Performance Method A - Details

ADDRESS: , , ,	PERMIT #:

6A-21 INFILTRATION REDUCTION COMPLIANCE CHECKLIST

COMPONENTS	SECTION	REQUIREMENTS FOR EACH PRACTICE	CHECK
Exterior Windows & Doors	606.1.ABC.1.1	Maximum:.3 cfm/sq.ft. window area; .5 cfm/sq.ft. door area.	
Exterior & Adjacent Walls	606.1.ABC.1.2.1	Caulk, gasket, weatherstrip or seal between: windows/doors & frames, surrounding wall; foundation & wall sole or sill plate; joints between exterior wall panels at corners; utility penetrations; between wall panels & top/bottom plates; between walls and floor. EXCEPTION: Frame walls where a continuous infiltration barrier is installed that extends from, and is sealed to, the foundation to the top plate.	
Floors	606.1.ABC.1.2.2	Penetrations/openings >1/8" sealed unless backed by truss or joint members. EXCEPTION: Frame floors where a continuous infiltration barrier is installed that is sealed to the perimeter, penetrations and seams.	
Ceilings	606.1.ABC.1.2.3	Between walls & ceilings; penetrations of ceiling plane of top floor; around shafts, chases, soffits, chimneys, cabinets sealed to continuous air barrier; gaps in gyp board & top plate; attic access. EXCEPTION: Frame ceilings where a continuous infiltration barrier is installed that is sealed at the perimeter, at penetrations and seams.	
Recessed Lighting Fixtures	606.1.ABC.1.2.4	Type IC rated with no penetrations, sealed; or Type IC or non-IC rated, installed inside a sealed box with 1/2" clearance & 3" from insulation; or Type IC rated with < 2.0 cfm from conditioned space, tested.	
Multi-story Houses	606.1.ABC.1.2.5	Air barrier on perimeter of floor cavity between floors.	
Additional Infiltration reqts	606.1.ABC.1.3	Exhaust fans vented to outdoors, dampers; combustion space heaters comply with NFPA, have combustion air.	

6A-22 OTHER PRESCRIPTIVE MEASURES (must be met or exceeded by all residences.)

COMPONENTS	SECTION	REQUIREMENTS	CHECK
Water Heaters	612.1	Comply with efficiency requirements in Table 612.1.ABC.3.2. Switch or clearly marked circuit breaker (electric) or cutoff (gas) must be provided. External or built-in heat trap required.	
Swimming Pools & Spas	612.1	Spas & heated pools must have covers (except solar heated). Non-commercial pools must have a pump timer. Gas spa & pool heaters must have a minimum thermal efficiency of 78%.	
Shower heads	612.1	Water flow must be restricted to no more than 2.5 gallons per minute at 80 PSIG.	
Air Distribution Systems	610.1	All ducts, fittings, mechanical equipment and plenum chambers shall be mechanically attached, sealed, insulated, and installed in accordance with the criteria of Section 610. Ducts in unconditioned attics: R-6 min. insulation.	
HVAC Controls	607.1	Separate readily accessible manual or automatic thermostat for each system.	
Insulation	604.1, 602.1	Ceilings-Min. R-19. Common walls-Frame R-11 or CBS R-3 both sides. Common ceiling & floors R-11.	

WATER HEATING & CODE COMPLIANCE STATUS

Residential Whole Building Performance Method A - Details

ADDRESS: , , , PERMIT #:

BASE				AS-BUILT							
WATER HEATING											
Number of Bedrooms	X	Multiplier	= Total	Tank Volume	EF	Number of Bedrooms	X	Tank Ratio	X Multiplier	X Credit Multiplier	= Total
3		2635.00	7905.0	50.0	0.92	3		1.00	2635.00	1.00	7905.0
				As-Built Total:							**7905.0**

CODE COMPLIANCE STATUS

BASE				AS-BUILT			
Cooling Points +	Heating Points +	Hot Water Points =	Total Points	Cooling Points +	Heating Points +	Hot Water Points =	Total Points
9565	**9545**	**7905**	**27015**	**5783**	**8747**	**7905**	**22436**

PASS

WINTER CALCULATIONS

Residential Whole Building Performance Method A - Details

ADDRESS: , , , PERMIT #:

BASE				AS-BUILT							
Winter Base Points:			**15214.3**	**Winter As-Built Points:**							**17140.1**
Total Winter Points	X	System Multiplier	= Heating Points	Total Component (System - Points)	X	Cap Ratio	X Duct Multiplier (DM x DSM x AHU)	X System Multiplier	X Credit Multiplier	=	Heating Points
				(sys 1: Electric Heat Pump 35000 btuh ,EFF(7.7) Ducts:Unc(S),Con(R),Int(AH),R6.0							
				17140.1		1.000	(1.060 x 1.169 x 0.93)	0.443	1.000		8747.4
15214.3		**0.6274**	**9545.5**	**17140.1**		**1.00**	**1.152**	**0.443**	**1.000**		**8747.4**

WINTER CALCULATIONS

Residential Whole Building Performance Method A - Details

ADDRESS: , , , PERMIT #:

BASE				AS-BUILT							
GLASS TYPES .18 X Conditioned Floor Area	X BWPM	= Points		Type/SC	Overhang Ornt	Len	Hgt	Area X	WPM X	WOF	= Points
.18	1767.5	12.74	4053.3	Double, Clear	E	5.0	6.0	60.0	18.79	1.24	1397.8
				Double, Clear	W	1.3	6.0	30.0	20.73	1.02	633.0
				Double, Clear	W	10.0	4.0	9.0	20.73	1.23	230.0
				Double, Clear	N	1.3	6.0	45.0	24.58	1.00	1107.9
				Double, Clear	S	1.3	6.0	30.0	13.30	1.08	432.3
				As-Built Total:				**174.0**			**3801.0**

WALL TYPES	Area X	BWPM	= Points	Type	R-Value	Area X	WPM	= Points
Adjacent	0.0	0.00	0.0	Frame, Wood, Exterior	11.0	1425.5	3.70	5274.4
Exterior	1425.5	3.70	5274.4					
Base Total:	**1425.5**		**5274.4**	**As-Built Total:**		**1425.5**		**5274.4**

DOOR TYPES	Area X	BWPM	= Points	Type	Area X	WPM	= Points
Adjacent	0.0	0.00	0.0	Exterior Insulated	142.8	8.40	1199.5
Exterior	160.5	8.40	1348.0	Exterior Insulated	17.7	8.40	148.5
Base Total:	**160.5**		**1348.0**	**As-Built Total:**	**160.5**		**1348.0**

CEILING TYPES	Area X	BWPM	= Points	Type	R-Value	Area X	WPM X WCM	= Points
Under Attic	1767.5	2.05	3623.4	Under Attic	30.0	1767.5	2.05 X 1.00	3623.4
Base Total:	**1767.5**		**3623.4**	**As-Built Total:**		**1767.5**		**3623.4**

FLOOR TYPES	Area X	BWPM	= Points	Type	R-Value	Area X	WPM	= Points
Slab	220.0(p)	8.9	1958.0	Slab-On-Grade Edge Insulation	0.0	220.0(p	18.80	4136.0
Raised	0.0	0.00	0.0					
Base Total:			**1958.0**	**As-Built Total:**		**220.0**		**4136.0**

INFILTRATION	Area X	BWPM	= Points	Area X	WPM	= Points
	1767.5	-0.59	-1042.8	1767.5	-0.59	-1042.8

SUMMER CALCULATIONS

Residential Whole Building Performance Method A - Details

ADDRESS: , , ,	PERMIT #:

BASE				AS-BUILT							
Summer Base Points: 22421.3				**Summer As-Built Points:**							**19523.5**
Total Summer Points	X System Multiplier	= Cooling Points		Total Component (System - Points)	X Cap Ratio	X Duct Multiplier (DM x DSM x AHU)	X System Multiplier	X Credit Multiplier	= Cooling Points		
				(sys 1: Central Unit 35000 btuh ,SEER/EFF(13.0) Ducts:Unc(S),Con(R),Int(AH),R6.0(INS)							
				19524	1.00	(1.08 x 1.147 x 0.91)	0.263	1.000	5783.4		
22421.3	**0.4266**	**9564.9**		**19523.5**	**1.00**	**1.128**	**0.263**	**1.000**	**5783.4**		

SUMMER CALCULATIONS

Residential Whole Building Performance Method A - Details

ADDRESS: , , , PERMIT #:

BASE				AS-BUILT							
GLASS TYPES .18 X Conditioned Floor Area	X BSPM	= Points		Type/SC	Overhang Ornt	Len	Hgt	Area X	SPM X	SOF	= Points
.18	1767.5	20.04	6375.8	Double, Clear	E	5.0	6.0	60.0	42.06	0.56	1414.3
				Double, Clear	W	1.3	6.0	30.0	38.52	0.93	1078.6
				Double, Clear	W	10.0	4.0	9.0	38.52	0.39	133.8
				Double, Clear	N	1.3	6.0	45.0	19.20	0.95	822.0
				Double, Clear	S	1.3	6.0	30.0	35.87	0.89	953.3
				As-Built Total:				**174.0**			**4402.0**
WALL TYPES	Area X	BSPM =	Points	Type		R-Value		Area X	SPM	=	Points
Adjacent	0.0	0.00	0.0	Frame, Wood, Exterior		11.0		1425.5	1.70		2423.4
Exterior	1425.5	1.70	2423.4								
Base Total:	**1425.5**		**2423.4**	**As-Built Total:**				**1425.5**			**2423.4**
DOOR TYPES	Area X	BSPM =	Points	Type				Area X	SPM	=	Points
Adjacent	0.0	0.00	0.0	Exterior Insulated				142.8	4.10		585.5
Exterior	160.5	4.10	658.0	Exterior Insulated				17.7	4.10		72.5
Base Total:	**160.5**		**658.0**	**As-Built Total:**				**160.5**			**658.0**
CEILING TYPES	Area X	BSPM =	Points	Type		R-Value		Area X	SPM X SCM =		Points
Under Attic	1767.5	1.73	3057.8	Under Attic		30.0		1767.5	1.73 X 1.00		3057.8
Base Total:	**1767.5**		**3057.8**	**As-Built Total:**				**1767.5**			**3057.8**
FLOOR TYPES	Area X	BSPM =	Points	Type		R-Value		Area X	SPM	=	Points
Slab	220.0(p)	-37.0	-8140.0	Slab-On-Grade Edge Insulation		0.0		220.0(p	-41.20		-9064.0
Raised	0.0	0.00	0.0								
Base Total:			**-8140.0**	**As-Built Total:**				**220.0**			**-9064.0**
INFILTRATION	Area X	BSPM =	Points					Area X	SPM	=	Points
	1767.5	10.21	18046.4					1767.5	10.21		18046.4

ENERGY PERFORMANCE LEVEL (EPL) DISPLAY CARD

ESTIMATED ENERGY PERFORMANCE SCORE* = 86.1

The higher the score, the more efficient the home.

John Northrup, , , ,

1.	New construction or existing	New	
2.	Single family or multi-family	Single family	
3.	Number of units, if multi-family	1	
4.	Number of Bedrooms	3	
5.	Is this a worst case?	No	
6.	Conditioned floor area (ft²)	1767.52 ft²	
7.	Glass type[1] and area: (Label reqd. by 13-104.4.5 if not default)		
	a. U-factor: (or Single or Double DEFAULT)	Description Area 7a. (Dble Default) 174.0 ft²	
	b. SHGC: (or Clear or Tint DEFAULT)	7b. (Clear) 174.0 ft²	
8.	Floor types		
	a. Slab-On-Grade Edge Insulation	R=0.0, 220.0(p) ft	
	b. N/A		
	c. N/A		
9.	Wall types		
	a. Frame, Wood, Exterior	R=11.0, 1425.5 ft²	
	b. N/A		
	c. N/A		
	d. N/A		
	e. N/A		
10.	Ceiling types		
	a. Under Attic	R=30.0, 1767.5 ft²	
	b. N/A		
	c. N/A		
11.	Ducts		
	a. Sup: Unc. Ret: Con. AH: Interior	Sup. R=6.0, 50.0 ft	
	b. N/A		

12.	Cooling systems		
	a. Central Unit	Cap: 35.0 kBtu/hr SEER: 13.00	
	b. N/A		
	c. N/A		
13.	Heating systems		
	a. Electric Heat Pump	Cap: 35.0 kBtu/hr HSPF: 7.70	
	b. N/A		
	c. N/A		
14.	Hot water systems		
	a. Electric Resistance	Cap: 50.0 gallons EF: 0.92	
	b. N/A		
	c. Conservation credits (HR-Heat recovery, Solar DHP-Dedicated heat pump)		
15.	HVAC credits (CF-Ceiling fan, CV-Cross ventilation, HF-Whole house fan, PT-Programmable Thermostat, MZ-C-Multizone cooling, MZ-H-Multizone heating)		

I certify that this home has complied with the Florida Energy Efficiency Code For Building Construction through the above energy saving features which will be installed (or exceeded) in this home before final inspection. Otherwise, a new EPL Display Card will be completed based on installed Code compliant features.

Builder Signature: _____ Date: _____

Address of New Home: _____ City/FL Zip: _____

**NOTE: The home's estimated energy performance score is only available through the FLA/RES computer program. This is not a Building Energy Rating. If your score is 80 or greater (or 86 for a US EPA/DOE EnergyStar™ designation), your home may qualify for energy efficiency mortgage (EEM) incentives if you obtain a Florida Energy Gauge Rating. Contact the Energy Gauge Hotline at 321/638-1492 or see the Energy Gauge web site at www.fsec.ucf.edu for information and a list of certified Raters. For information about Florida's Energy Efficiency Code For Building Construction, contact the Department of Community Affairs at 850/487-1824.*

1 Predominant glass type. For actual glass type and areas, see Summer & Winter Glass output on pages 2&4.

EnergyGauge® (Version: FLRCPB v4.21)

BUILDING INPUT SUMMARY REPORT

PROJECT

Title:	John Northrup	**Family Type:**	Single	**Address Type:**	Street Address
Owner:	John Northrup	**New/Existing:**	New	**Lot #:**	N/A
# of Units:	1	**Bedrooms:**	3	**Subdivision:**	N/A
Builder Name:	(blank)	**Conditioned Area:**	1767.52	**Platbook:**	N/A
Climate:	North	**Total Stories:**	1	**Street:**	(blank)
Permit Office:	(blank)	**Worst Case:**	No	**County:**	(blank)
Jurisdiction #:	(blank)	**Rotate Angle:**	(blank)	**City, St, Zip:**	, ,

FLOORS

#	Floor Type	R-Val	Area/Perimeter	Units
1	Slab-On-Grade Edge Insulation	0.0	220.0(p) ft	1

DOORS

#	Door Type	Orientation	Area	Units
1	Insulated	Exterior	20.4 ft²	7
2	Insulated	Exterior	17.7 ft²	1

CEILINGS

#	Ceiling Type	R-Val	Area	Base Area	Units
1	Under Attic	30.0	1767.5 ft²	1767.5 ft²	1

Credit Multipliers: None

COOLING

#	System Type	Efficiency	Capacity
1	Central Unit	SEER: 13.00	35.0 kBtu/hr

Credit Multipliers: None

WALLS

#	Wall Type	Location	R-Val	Area	Units
1	Frame - Wood	Exterior	11.0	1425.5 ft²	1

HEATING

#	System Type	Efficiency	Capacity
1	Electric Heat Pump	COP: 7.70	35.0 kBtu/hr

Credit Multipliers: None

WINDOWS

#	Panes	Tint	Ornt	Area	OH Length	OH Hght	Units
1	Double	Clear	E	15.0 ft²	5.0 ft	6.0 ft	4
2	Double	Clear	W	15.0 ft²	1.3 ft	6.0 ft	2
3	Double	Clear	W	9.0 ft²	10.0 ft	4.0 ft	1
4	Double	Clear	N	15.0 ft²	1.3 ft	6.0 ft	3
5	Double	Clear	S	15.0 ft²	1.3 ft	6.0 ft	2

DUCTS

#	Supply Location	Return Location	Air Handler Location	Supply R-Val	Supply Length
1	Uncond.	Cond.	Interior	6.0	50.0 ft

Credit Multipliers: None

WATER

#	System Type	EF	Cap.	Conservation Type	Con. EF
1	Electric Resistance	0.92	50.0	None	0.00

REFR.

#	Use Default?	Annual Operating Cost	Electric Rate
1	Yes	N/A	N/A

MISC

Rater Name:	CodeOnlyPro	**Class #:**	3	**Pool Size:**	0
Rater Certification #:	CodeOnlyPro	**Duct Leakage Type:**	N/A	**Pump Size:**	0.00 hp
Area Under Fluorescent:	0.0	**Visible Duct Disconnects:**	N/A	**Dryer Type:**	Electric
Area Under Incandescent:	1767.5	**Leak Free Duct System Proposed:**	No	**Stove Type:**	Electric
NOTE: Not all Rating info shown		**HRV/ERV System Present?:**	No	**Avg Ceil Hgt:**	

Residential System Sizing Calculation

Summary

John Northrup

Project Title:
John Northrup

Code Only
Professional Version
Climate: North

10/17/2006

Location for weather data: Tallahassee - Defaults: Latitude(30) Altitude(55 ft.) Temp Range(M)
Humidity data: Interior RH (50%) Outdoor wet bulb (76F) Humidity difference(46gr.)

Winter design temperature	28	F	Summer design temperature	93	F
Winter setpoint	70	F	Summer setpoint	75	F
Winter temperature difference	42	F	Summer temperature difference	18	F
Total heating load calculation	**31959**	**Btuh**	**Total cooling load calculation**	**20855**	**Btuh**
Submitted heating capacity	% of calc	Btuh	Submitted cooling capacity	% of calc	Btuh
Total (Electric Heat Pump)	109.5	35000	Sensible (SHR = 0.75)	138.5	26250
Heat Pump + Auxiliary(0.0kW)	109.5	35000	Latent	460.0	8750
			Total (Electric Heat Pump)	167.8	35000

WINTER CALCULATIONS

Winter Heating Load (for 1768 sqft)

Load component			Load	
Window total	174	sqft	6358	Btuh
Wall total	1426	sqft	5680	Btuh
Door total	160	sqft	2359	Btuh
Ceiling total	1768	sqft	2364	Btuh
Floor total	220	sqft	10903	Btuh
Infiltration	90	cfm	4130	Btuh
Duct loss			165	Btuh
Subtotal			**31959**	**Btuh**
Ventilation	0	cfm	0	Btuh
TOTAL HEAT LOSS			**31959**	**Btuh**

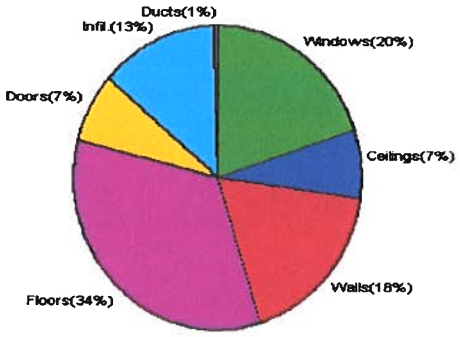

SUMMER CALCULATIONS

Summer Cooling Load (for 1768 sqft)

Load component			Load	
Window total	174	sqft	5779	Btuh
Wall total	1426	sqft	3665	Btuh
Door total	160	sqft	1629	Btuh
Ceiling total	1768	sqft	2983	Btuh
Floor total			0	Btuh
Infiltration	47	cfm	932	Btuh
Internal gain			3860	Btuh
Duct gain			105	Btuh
Sens. Ventilation	0	cfm	0	Btuh
Total sensible gain			**18953**	**Btuh**
Latent gain(ducts)			30	Btuh
Latent gain(infiltration)			1472	Btuh
Latent gain(ventilation)			0	Btuh
Latent gain(internal/occupants/other)			400	Btuh
Total latent gain			**1902**	**Btuh**
TOTAL HEAT GAIN			**20855**	**Btuh**

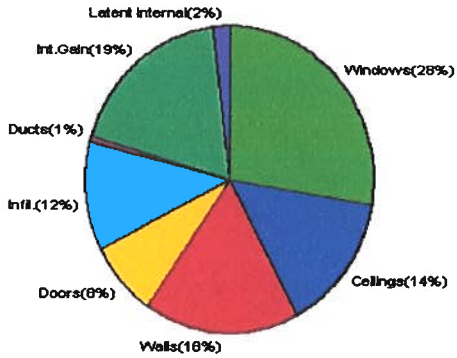

For Florida residences only

EnergyGauge® System Sizing
PREPARED BY: M Hopkins
DATE: 10/17/06

Manual J Winter Calculations

Residential Load - Component Details (continued)

John Northrup

,

Project Title:
John Northrup

Code Only
Professional Version
Climate: North

Key: Window types (SHGC - Shading coefficient of glass as SHGC numerical value or as clea
(Frame types - metal, wood or insulated metal)
(U - Window U-Factor or 'DEF' for default)
(HTM - ManualJ Heat Transfer Multiplier)

Key: Floor size (perimeter(p) for slab-on-grade or area for all other floor types)

For Florida residences only

Notice of Treatment 12280

Applicator: Florida Pest Control & Chemical Co. (www.flapest .com)
Address: Baya Hyl
City Lake City Phone 752-1703

Site Location: Subdivision N/A
Lot # 8 Block# Permit # 25201
Address 186 SW Turkey Gln

Product used	Active Ingredient	% Concentration
☑ Premise	Imidacloprid	0.1%
☐ Termidor	Fipronil	0.12%
☐ Bora-Care	Disodium Octaborate Tetrahydrate	23.0%

Type treatment: ☑ Soil ☐ Wood

Area Treated	Square feet	Linear feet	Gallons Applied
Dwelling	2627	233	180

As per Florida Building Code 104.2.6 – If soil chemical barrier method for termite prevention is used, final exterior treatment shall be completed prior to final building approval.

If this notice is for the final exterior treatment, initial this line _____.

11/24/06 — Date
0400 — Time
James D Parker — Print Technician's Name

Remarks: F254 Gunny

Applicator - White Permit File - Canary Permit Holder - Pink

10/05 ©

System Sizing Calculations - Winter

Residential Load - Whole House Component Details

John Northrup

Project Title:
John Northrup

Code Only
Professional Version
Climate: North

Reference City: Tallahassee (Defaults) Winter Temperature Difference: 42.0 F

10/17/2006

Component Loads for Whole House

Window	Panes/SHGC/Frame/U	Orientation	Area(sqft) X	HTM=	Load
1	2, Clear, Metal, 0.87	E	60.0	36.5	2192 Btuh
2	2, Clear, Metal, 0.87	W	30.0	36.5	1096 Btuh
3	2, Clear, Metal, 0.87	W	9.0	36.5	329 Btuh
4	2, Clear, Metal, 0.87	N	45.0	36.5	1644 Btuh
5	2, Clear, Metal, 0.87	S	30.0	36.5	1096 Btuh
	Window Total		174(sqft)		6358 Btuh
Walls	Type	R-Value	Area X	HTM=	Load
1	Frame - Wood - Ext(0.09)	11.0	1426	4.0	5680 Btuh
	Wall Total		1426		5680 Btuh
Doors	Type		Area X	HTM=	Load
1	Insulated - Exterior		18	14.7	260 Btuh
2	Insulated - Exterior		143	14.7	2099 Btuh
	Door Total		160		2359Btuh
Ceilings	Type/Color/Surface	R-Value	Area X	HTM=	Load
1	Vented Attic/D/Shin)	30.0	1768	1.3	2364 Btuh
	Ceiling Total		1768		2364Btuh
Floors	Type	R-Value	Size X	HTM=	Load
1	Slab On Grade	0	220.0 ft(p)	49.6	10903 Btuh
	Floor Total		220		10903 Btuh
			Envelope Subtotal:		27664 Btuh
Infiltration	Type	ACH X	Volume(cuft)	walls(sqft)	CFM=
	Natural	0.38	14140	1426	89.6	4130 Btuh
Ductload				(DLM of 0.005)	165 Btuh
All Zones			**Sensible Subtotal All Zones**		**31959 Btuh**

WHOLE HOUSE TOTALS

	Subtotal Sensible	31959 Btuh
	Ventilation Sensible	0 Btuh
	Total Btuh Loss	31959 Btuh

Manual J Winter Calculations

Residential Load - Component Details (continued)

John Northrup

Project Title:
John Northrup

Code Only
Professional Version
Climate: North

,

Key: Window types (SHGC - Shading coefficient of glass as SHGC numerical value or as clea
(Frame types - metal, wood or insulated metal)
(U - Window U-Factor or 'DEF' for default)
(HTM - ManualJ Heat Transfer Multiplier)

Key: Floor size (perimeter(p) for slab-on-grade or area for all other floor types)

For Florida residences only

System Sizing Calculations - Winter

Residential Load - Room by Room Component Details

John Northrup

Project Title:
John Northrup

Code Only
Professional Version
Climate: North

Reference City: Tallahassee (Defaults) Winter Temperature Difference: 42.0 F

10/17/2006

Component Loads for Zone #1: Main

Window	Panes/SHGC/Frame/U	Orientation	Area(sqft) X	HTM=	Load
1	2, Clear, Metal, 0.87	E	60.0	36.5	2192 Btuh
2	2, Clear, Metal, 0.87	W	30.0	36.5	1096 Btuh
3	2, Clear, Metal, 0.87	W	9.0	36.5	329 Btuh
4	2, Clear, Metal, 0.87	N	45.0	36.5	1644 Btuh
5	2, Clear, Metal, 0.87	S	30.0	36.5	1096 Btuh
	Window Total		174(sqft)		6358 Btuh
Walls	Type	R-Value	Area X	HTM=	Load
1	Frame - Wood - Ext(0.09)	11.0	1426	4.0	5680 Btuh
	Wall Total		1426		5680 Btuh
Doors	Type		Area X	HTM=	Load
1	Insulated - Exterior		18	14.7	260 Btuh
2	Insulated - Exterior		143	14.7	2099 Btuh
	Door Total		160		2359Btuh
Ceilings	Type/Color/Surface	R-Value	Area X	HTM=	Load
1	Vented Attic/D/Shin)	30.0	1768	1.3	2364 Btuh
	Ceiling Total		1768		2364Btuh
Floors	Type	R-Value	Size X	HTM=	Load
1	Slab On Grade	0	220.0 ft(p)	49.6	10903 Btuh
	Floor Total		220		10903 Btuh
			Zone Envelope Subtotal:		27664 Btuh
Infiltration	Type	ACH X	Volume(cuft)	walls(sqft) CFM=	
	Natural	0.38	14140	1426 89.6	4130 Btuh
Ductload	Average sealed, Supply(R6.0-Attic), Return(R6.0-Cond)(DLM of 0.005)				165 Btuh
Zone #1			**Sensible Zone Subtotal**		**31959 Btuh**

WHOLE HOUSE TOTALS

	Subtotal Sensible	31959 Btuh
	Ventilation Sensible	0 Btuh
	Total Btuh Loss	31959 Btuh

Manual J Summer Calculations

Residential Load - Component Details (continued)

John Northrup

Project Title:
John Northrup

Code Only
Professional Version
Climate: North

10/17/2006

WHOLE HOUSE TOTALS

Whole House Totals for Cooling	**Sensible Envelope Load All Zones**	**18848 Btuh**
	Sensible Duct Load	105 Btuh
	Total Sensible Zone Loads	**18953 Btuh**
	Sensible ventilation	0 Btuh
	Blower	0 Btuh
	Total sensible gain	**18953 Btuh**
	Latent infiltration gain (for 46 gr. humidity difference)	1472 Btuh
	Latent ventilation gain	0 Btuh
	Latent duct gain	30 Btuh
	Latent occupant gain (2 people @ 200 Btuh per person)	400 Btuh
	Latent other gain	0 Btuh
	Latent total gain	**1902 Btuh**
	TOTAL GAIN	**20855 Btuh**

*Key: Window types (Pn - Number of panes of glass)
(SHGC - Shading coefficient of glass as SHGC numerical value or as clear or tint)
(U - Window U-Factor or 'DEF' for default)
(InSh - Interior shading device: none(N), Blinds(B), Draperies(D) or Roller Shades(R))
(ExSh - Exterior shading device: none(N) or numerical value)
(BS - Insect screen: none(N), Full(F) or Half(H))
(Ornt - compass orientation)

For Florida residences only

System Sizing Calculations - Summer

Residential Load - Whole House Component Details

John Northrup

,

Project Title:
John Northrup

Code Only
Professional Version
Climate: North

Reference City: Tallahassee (Defaults) Summer Temperature Difference: 18.0 F 10/17/2006

Component Loads for Whole House

Window	Type* Pn/SHGC/U/InSh/ExSh/IS	Ornt	Overhang Len	Overhang Hgt	Window Area(sqft) Gross	Shaded	Unshaded	HTM Shaded	HTM Unshaded	Load
1	2, Clear, 0.87, B-M, N,N	E	5ft.	6ft.	60.0	37.8	22.2	22	59	2154 Btuh
2	2, Clear, 0.87, B-M, N,N	W	1.33	6ft.	30.0	0.6	29.4	22	59	1743 Btuh
3	2, Clear, 0.87, B-M, N,N	W	10ft.	4ft.	9.0	9.0	0.0	22	59	202 Btuh
4	2, Clear, 0.87, B-M, N,N	N	1.33	6ft.	45.0	0.0	45.0	22	22	1009 Btuh
5	2, Clear, 0.87, B-M, N,N	S	1.33	6ft.	30.0	30.0	0.0	22	27	672 Btuh
	Window Total				174 (sqft)					5779 Btuh

Walls	Type	R-Value/U-Value	Area(sqft)	HTM	Load
1	Frame - Wood - Ext	11.0/0.09	1425.5	2.6	3665 Btuh
	Wall Total		1426 (sqft)		3665 Btuh

Doors	Type	Area (sqft)	HTM	Load
1	Insulated - Exterior	17.7	10.1	179 Btuh
2	Insulated - Exterior	142.8	10.1	1449 Btuh
	Door Total	160 (sqft)		1629 Btuh

Ceilings	Type/Color/Surface	R-Value	Area(sqft)	HTM	Load
1	Vented Attic/DarkShingle	30.0	1767.5	1.7	2983 Btuh
	Ceiling Total		1768 (sqft)		2983 Btuh

Floors	Type	R-Value	Size	HTM	Load
1	Slab On Grade	0.0	220 (ft(p))	0.0	0 Btuh
	Floor Total		220.0 (sqft)		0 Btuh

	Envelope Subtotal:	14057 Btuh

Infiltration	Type	ACH	Volume(cuft)	wall area(sqft)	CFM=	Load
	SensibleNatural	0.20	14140	1426	89.6	932 Btuh

Internal gain	Occupants		Btuh/occupant		Appliance	Load
	2	X	230	+	3400	3860 Btuh

Duct load	(DGM of 0.006)	105 Btuh
	Sensible Load All Zones	**18953 Btuh**

Manual J Summer Calculations

Residential Load - Component Details (continued)

John Northrup

Project Title:
John Northrup

Code Only
Professional Version
Climate: North

10/17/2006

WHOLE HOUSE TOTALS

Whole House Totals for Cooling	**Sensible Envelope Load All Zones**	**18848**	**Btuh**
	Sensible Duct Load	105	Btuh
	Total Sensible Zone Loads	**18953**	**Btuh**
	Sensible ventilation	0	Btuh
	Blower	0	Btuh
	Total sensible gain	**18953**	**Btuh**
	Latent infiltration gain (for 46 gr. humidity difference)	1472	Btuh
	Latent ventilation gain	0	Btuh
	Latent duct gain	30	Btuh
	Latent occupant gain (2 people @ 200 Btuh per person)	400	Btuh
	Latent other gain	0	Btuh
	Latent total gain	**1902**	**Btuh**
	TOTAL GAIN	**20855**	**Btuh**

*Key: Window types (Pn - Number of panes of glass)
(SHGC - Shading coefficient of glass as SHGC numerical value or as clear or tint)
(U - Window U-Factor or 'DEF' for default)
(InSh - Interior shading device: none(N), Blinds(B), Draperies(D) or Roller Shades(R))
(ExSh - Exterior shading device: none(N) or numerical value)
(BS - Insect screen: none(N), Full(F) or Half(H))
(Ornt - compass orientation)

For Florida residences only

System Sizing Calculations - Summer

Residential Load - Room by Room Component Details

John Northrup

Project Title:
John Northrup

Code Only
Professional Version
Climate: North

Reference City: Tallahassee (Defaults) Summer Temperature Difference: 18.0 F 10/17/2006

Component Loads for Zone #1: Main

Window	Type* Pn/SHGC/U/InSh/ExSh/IS	Ornt	Overhang Len	Overhang Hgt	Window Area(sqft) Gross	Shaded	Unshaded	HTM Shaded	HTM Unshaded	Load
1	2, Clear, 0.87, B-M, N,N	E	5ft.	6ft.	60.0	37.8	22.2	22	59	2154 Btuh
2	2, Clear, 0.87, B-M, N,N	W	1.33	6ft.	30.0	0.6	29.4	22	59	1743 Btuh
3	2, Clear, 0.87, B-M, N,N	W	10ft.	4ft.	9.0	9.0	0.0	22	59	202 Btuh
4	2, Clear, 0.87, B-M, N,N	N	1.33	6ft.	45.0	0.0	45.0	22	22	1009 Btuh
5	2, Clear, 0.87, B-M, N,N	S	1.33	6ft.	30.0	30.0	0.0	22	27	672 Btuh
	Window Total				174 (sqft)					5779 Btuh

Walls	Type	R-Value/U-Value	Area(sqft)	HTM	Load
1	Frame - Wood - Ext	11.0/0.09	1425.5	2.6	3665 Btuh
	Wall Total		1426 (sqft)		3665 Btuh

Doors	Type	Area (sqft)	HTM	Load
1	Insulated - Exterior	17.7	10.1	179 Btuh
2	Insulated - Exterior	142.8	10.1	1449 Btuh
	Door Total	160 (sqft)		1629 Btuh

Ceilings	Type/Color/Surface	R-Value	Area(sqft)	HTM	Load
1	Vented Attic/DarkShingle	30.0	1767.5	1.7	2983 Btuh
	Ceiling Total		1768 (sqft)		2983 Btuh

Floors	Type	R-Value	Size	HTM	Load
1	Slab On Grade	0.0	220 (ft(p))	0.0	0 Btuh
	Floor Total		220.0 (sqft)		0 Btuh

	Zone Envelope Subtotal:	14057 Btuh

Infiltration	Type	ACH	Volume(cuft)	wall area(sqft)	CFM=	Load
	SensibleNatural	0.20	14140	1426	47.1	932 Btuh

Internal gain	Occupants		Btuh/occupant		Appliance	Load
	2	X	230	+	3400	3860 Btuh

Duct load	Average sealed, Supply(R6.0-Attic), Return(R6.0-Cond) (DGM of 0.006)	105 Btuh
	Sensible Zone Load	**18953 Btuh**

Residential Window Diversity

MidSummer

John Northrup

Project Title:
John Northrup

Code Only
Professional Version
Climate: North

10/17/2006

Weather data for: Tallahassee - Defaults

Summer design temperature	93	F	Average window load for July	6559 Btuh
Summer setpoint	75	F	Peak window load for July	9230 Btuh
Summer temperature difference	18	F	Excusion limit(130% of Ave.)	8527 Btuh
Latitude	30	North	Window excursion (July)	703 Btuh

WINDOW Average and Peak Loads

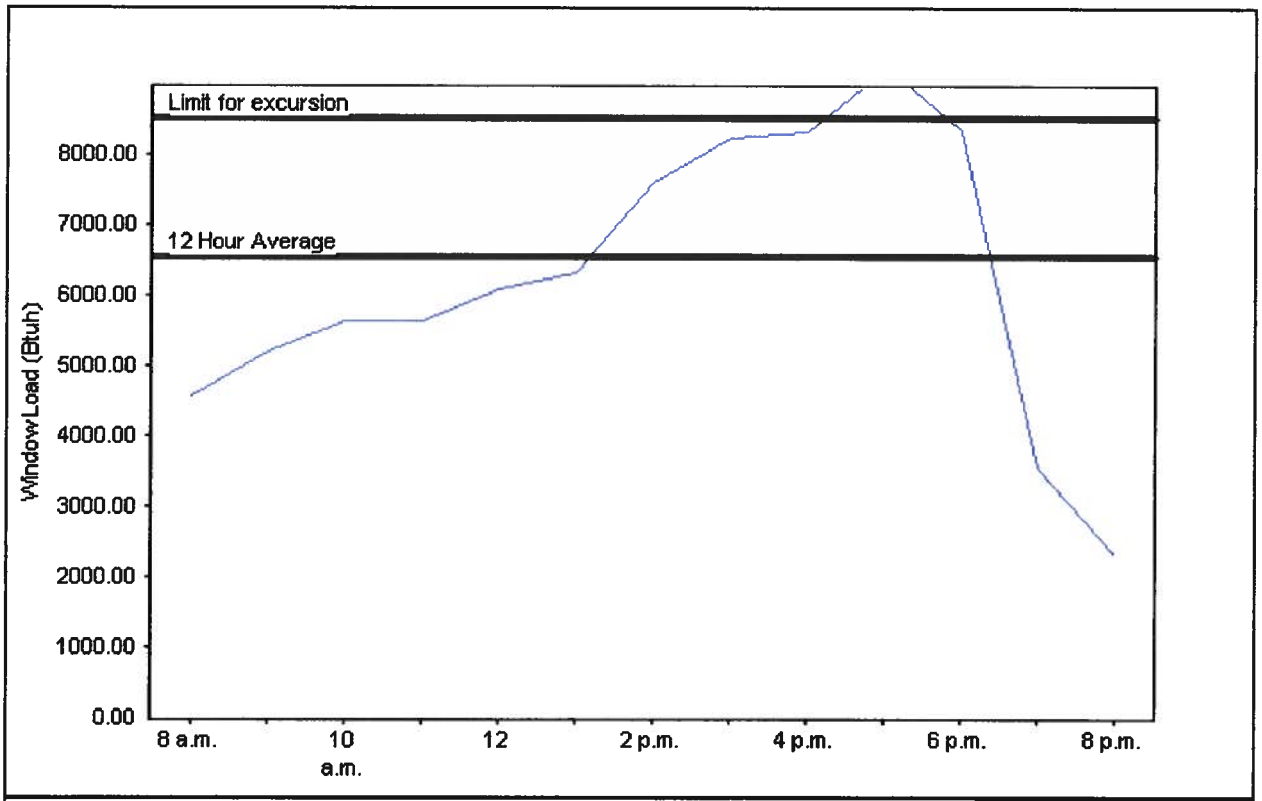

Total July Window Load(Radiation and conduction)

Warning: This application has glass areas that produce relatively large heat gains for part of the day. Variable air volume devices may be required to overcome spikes in solar gain for one or more rooms. A zoned system may be required or some rooms may require zone control.

EnergyGauge® System Sizing for Florida residences only
PREPARED BY: M Sophis
DATE: 10/17/06

EnergyGauge® FLRCPB v4.21

Alpine Engineered Products, Inc.

1950 Marley Drive Haines City, FL 33844
Florida Engineering Certificate of Authorization Number: 567
Florida Certificate of Product Approval # FL1999
 Document ID:1T1I215-Z0717073013

Truss Fabricator: W.B. Howland
Job Identification: 3945-/NORTHRUP RESIDENCE /OWNER BUILDER -- , **
Truss Count: 45
Model Code: Florida Building Code 2004
Truss Criteria: ANSI/TPI-2002(STD)/FBC
Engineering Software: Alpine Software,Versions 7.25, 7.26.
Structural Engineer of Record: The identity of the structural EOR did not exist as of
Address: the seal date per section 61G15-31.003(5a) of the FAC
Minimum Design Loads: Roof - 40.0 PSF @ 1.25 Duration
Floor - N/A
Wind - 110 MPH ASCE 7-02 -Closed

Seal Date: 10/17/2006

-Truss Design Engineer-
James F. Collins Jr.
Florida License Number: 52212
1950 Marley Drive
Haines City, FL 33844

Notes:

1. Determination as to the suitability of these truss components for the structure is the responsibility of the building designer/engineer of record, as defined in ANSI/TPI 1
2. The drawing date shown on this index sheet must match the date shown on the individual truss component drawing.
3. As shown on attached drawings; the drawing number is preceded by: HCUSR215

Details: CNBRGBLK-BRCLBSUB-

#	Ref Description	Drawing#	Date
1	46917--A-HG	06289269	10/16/06
2	46918--A1	06289247	10/16/06
3	46919--A2	06289248	10/16/06
4	46920--A3	06289270	10/16/06
5	46921--A4	06289249	10/16/06
6	46922--A5	06289250	10/16/06
7	46923--A6	06289251	10/16/06
8	46924--A7	06289252	10/16/06
9	46925--A8	06289253	10/16/06
10	46926--A9	06289254	10/16/06
11	46927--B-HG	06289271	10/16/06
12	46928--B1	06289272	10/16/06
13	46929--B2	06289273	10/16/06
14	46930--B3	06289274	10/16/06
15	46931--B4	06289275	10/16/06
16	46932--B5	06289276	10/16/06
17	46933--B6	06289277	10/16/06
18	46934--D-GRD	06289315	10/16/06
19	46935--H-GRD	06289316	10/16/06
20	46936--H-HG	06289318	10/16/06
21	46937--JC1	06289280	10/16/06
22	46938--JC3	06289255	10/16/06
23	46939--JC5	06289256	10/16/06
24	46940--JE4	06289257	10/16/06
25	46941--JE5	06289258	10/16/06
26	46942--JE6	06289259	10/16/06
27	46943--JE7	06289260	10/16/06
28	46944--JE8	06289261	10/16/06
29	46945--JH5	06289285	10/16/06
30	46946--JH7	06289287	10/16/06
31	46947--JH10	06289317	10/16/06
32	46948--C4	06289291	10/16/06
33	46949--C5	06289295	10/16/06
34	46950--C6	06289300	10/16/06
35	46951--C7	06289301	10/16/06
36	46952--C8	06289303	10/16/06
37	46953--C9	06289306	10/16/06
38	46954--C12	06289307	10/16/06
39	46955--C13	06289308	10/16/06
40	46956--C14	06289309	10/16/06
41	46957--C2	06289310	10/16/06
42	46958--C3	06289311	10/16/06
43	46959--C-HG	06289312	10/16/06
44	46960--C11	06289313	10/16/06
45	46961--C10	06289314	10/16/06

Alpine Engineered Products, Inc.

1950 Marley Drive Haines City, FL 33844
Florida Engineering Certificate of Authorization Number: 567
 Document ID:1T1I215-Z0717073013

Truss Fabricator: W.B. Howland
Job Identification: 3945-/NORTHRUP RESIDENCE /OWNER BUILDER -- , **
Truss Count: 2
Model Code: Florida Building Code 2004
Truss Criteria: ANSI/TPI-2002(STD)/FBC
Engineering Software: Alpine Software,Versions 7.25, 7.26.
Structural Engineer of Record:
Address:
Minimum Design Loads: Roof - 40.0 PSF @ 1.25 Duration
Floor - N/A
Wind - 110 MPH ASCE 7-02 -Closed

Seal Date: 10/17/2006

-Truss Design Engineer-
James F. Collins Jr.
Florida License Number: 52212
1950 Marley Drive
Haines City, FL 33844

Notes:

1. Determination as to the suitability of these truss components for the structure is the responsibility of the building designer/engineer of record, as defined in ANSI/TPI 1
2. The drawing date shown on this index sheet must match the date shown on the individual truss component drawing.
3. As shown on attached drawings; the drawing number is preceded by: HCUSR215

Revised Trusses

#	Ref Description	Drawing#	Date
1	46936--H-HG	06289318	10/16/06
2	46954--C12	06289307	10/16/06

ALPINE

Top chord 2x4 SP #2 N :T2 2x6 SP SS:
Bot chord 2x6 SP #2 N
Webs 2x4 SP #2 N

110 mph wind, 15.00 ft mean hgt, ASCE 7-02, CLOSED bldg, not located within 4.50 ft from roof edge, CAT II, EXP B, wind TC DL=5.0 psf, wind BC DL=5.0 psf.

Wind reactions based on MWFRS pressures.

(A) 1x4 SP #3 or better "T" brace. 80% length of web member. Attach with 8d Box or Gun (0.113"x2.5",min.)nails @ 6" OC.

Deflection meets L/240 live and L/180 total load.

Plates sized for a minimum of 3.00 sq.in./piece.

SPECIAL LOADS
------(LUMBER DUR.FAC.=1.25 / PLATE DUR.FAC.=1.25)
TC - From 61 PLF at -2.00 to 61 PLF at 25.67
BC - From 4 PLF at -2.00 to 4 PLF at 0.00
BC - From 20 PLF at 0.00 to 20 PLF at 25.67
TC - 315 LB Conc. Load at 4.88, 20.79
TC - 113 LB Conc. Load at 6.94, 8.94, 10.94, 12.83, 14.73 16.73, 18.73
BC - 128 LB Conc. Load at 4.88, 20.79
BC - 47 LB Conc. Load at 6.94, 8.94, 10.94, 12.83, 14.73 16.73, 18.73

In lieu of structural panels use purlins to brace all flat TC @ 24" OC.

The overall height of this truss excluding overhang is 1-11-7.

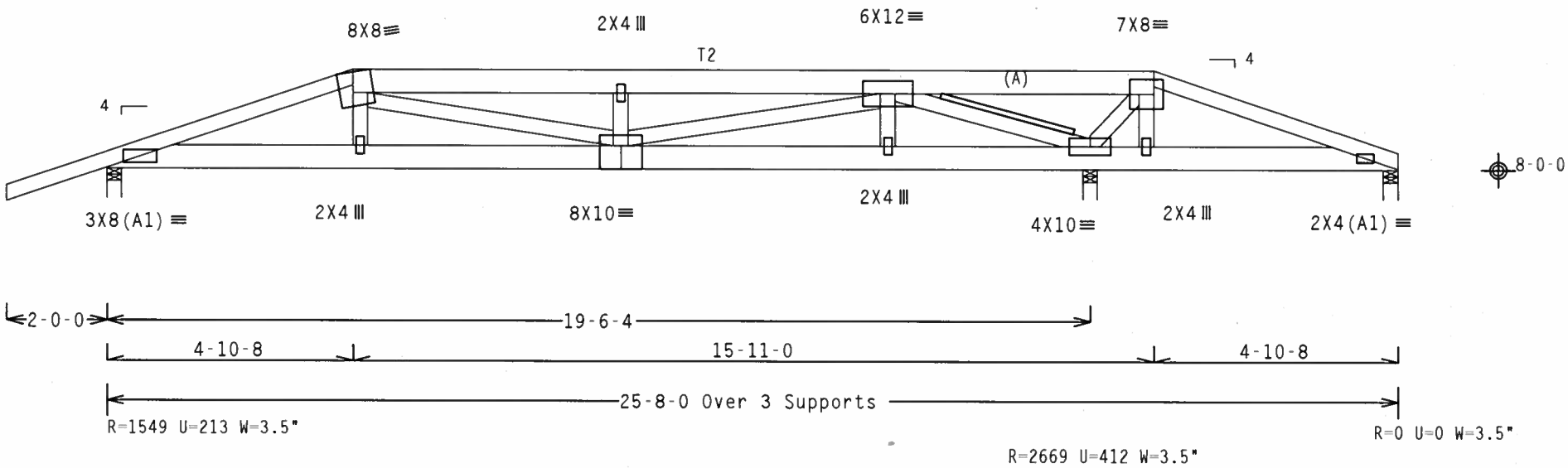

Design Crit: TPI-2002(STD)/FBC
PLT TYP. Wave Cq/RT=1.00(1.25)/10(0) 7.25.0503 QTY:2 FL/-/5/-/-/R/- Scale =.3125"/Ft.

ALPINE
Alpine Engineered Products, Inc.
1950 Marley Drive
Haines City, FL 33844
FL Certificate of Authorization # 567

WARNING TRUSSES REQUIRE EXTREME CARE IN FABRICATION, HANDLING, SHIPPING, INSTALLING AND BRACING. REFER TO BCSI 1-03 (BUILDING COMPONENT SAFETY INFORMATION), PUBLISHED BY TPI (TRUSS PLATE INSTITUTE, 583 D'ONOFRIO DR., SUITE 200, MADISON, WI 53719) AND WTCA (WOOD TRUSS COUNCIL OF AMERICA, 6300 ENTERPRISE LN, MADISON, WI 53719) FOR SAFETY PRACTICES PRIOR TO PERFORMING THESE FUNCTIONS. UNLESS OTHERWISE INDICATED, TOP CHORD SHALL HAVE PROPERLY ATTACHED STRUCTURAL PANELS AND BOTTOM CHORD SHALL HAVE A PROPERLY ATTACHED RIGID CEILING.

IMPORTANTFURNISH A COPY OF THIS DESIGN TO THE INSTALLATION CONTRACTOR. ALPINE ENGINEERED PRODUCTS, INC. SHALL NOT BE RESPONSIBLE FOR ANY DEVIATION FROM THIS DESIGN; ANY FAILURE TO BUILD THE TRUSS IN CONFORMANCE WITH TPI; OR FABRICATING, HANDLING, SHIPPING, INSTALLING & BRACING OF TRUSSES. DESIGN CONFORMS WITH APPLICABLE PROVISIONS OF NDS (NATIONAL DESIGN SPEC. BY AF&PA) AND TPI. ALPINE CONNECTOR PLATES ARE MADE OF 20/18/16GA (W.H/S/K) ASTM A653 GRADE 40/60 (W. K/H.S) GALV. STEEL. APPLY PLATES TO EACH FACE OF TRUSS AND, UNLESS OTHERWISE LOCATED ON THIS DESIGN, POSITION PER DRAWINGS 160A-Z. ANY INSPECTION OF PLATES FOLLOWED BY (I) SHALL BE PER ANNEX A3 OF TPI1-2002 SEC.3. A SEAL ON THIS DRAWING INDICATES ACCEPTANCE OF PROFESSIONAL ENGINEERING RESPONSIBILITY SOLELY FOR THE TRUSS COMPONENT DESIGN SHOWN. THE SUITABILITY AND USE OF THIS COMPONENT FOR ANY BUILDING IS THE RESPONSIBILITY OF THE BUILDING DESIGNER PER ANSI/TPI 1 SEC. 2.

JAMES F. COLLINS JR. LICENSE No. 52212 STATE OF FLORIDA PROFESSIONAL ENGINEER
Oct

TC LL	20.0 PSF	REF R215-- 46917
TC DL	10.0 PSF	DATE 10/16/06
BC DL	10.0 PSF	DRW HCUSR215 06289269
BC LL	0.0 PSF	HC-ENG DAB/AP
TOT.LD.	40.0 PSF	SEQN- 36250
DUR.FAC.	1.25	FROM CAW
SPACING	24.0"	JREF- 1T1I215_Z07

Top chord 2x4 SP #2 N
Bot chord 2x4 SP #2 N
Webs 2x4 SP #2 N

Wind reactions based on MWFRS pressures.

In lieu of structural panels use purlins to brace all flat TC @ 24" OC.

Plates sized for a minimum of 3.00 sq.in./piece.

110 mph wind, 15.00 ft mean hgt, ASCE 7-02, CLOSED bldg, not located within 4.50 ft from roof edge, CAT II, EXP B, wind TC DL=5.0 psf, wind BC DL=5.0 psf.

Right end vertical not exposed to wind pressure.

Deflection meets L/240 live and L/180 total load.

The overall height of this truss excluding overhang is 2-7-7.

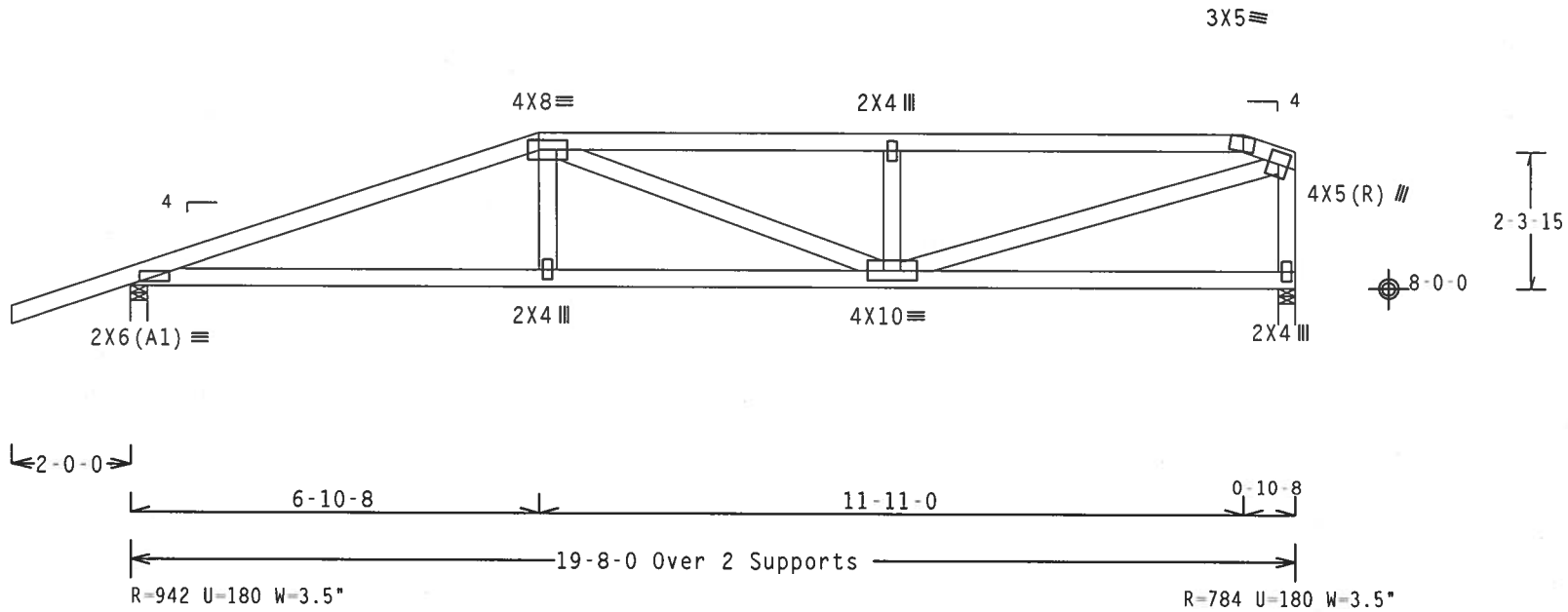

Design Crit: TPI-2002(STD)/FBC

PLT TYP. Wave

Cq/RT=1.00(1.25)/10(0) 7.25.0503 QTY:1 FL/-/5/-/-/R/- Scale =.3125"/Ft.

WARNING TRUSSES REQUIRE EXTREME CARE IN FABRICATION, HANDLING, SHIPPING, INSTALLING AND BRACING. REFER TO BCSI 1-03 (BUILDING COMPONENT SAFETY INFORMATION), PUBLISHED BY TPI (TRUSS PLATE INSTITUTE, 583 D'ONOFRIO DR., SUITE 200, MADISON, WI 53719) AND WTCA (WOOD TRUSS COUNCIL OF AMERICA, 6300 ENTERPRISE LN, MADISON, WI 53719) FOR SAFETY PRACTICES PRIOR TO PERFORMING THESE FUNCTIONS. UNLESS OTHERWISE INDICATED, TOP CHORD SHALL HAVE PROPERLY ATTACHED STRUCTURAL PANELS AND BOTTOM CHORD SHALL HAVE A PROPERLY ATTACHED RIGID CEILING.

IMPORTANTFURNISH A COPY OF THIS DESIGN TO THE INSTALLATION CONTRACTOR. ALPINE ENGINEERED PRODUCTS, INC. SHALL NOT BE RESPONSIBLE FOR ANY DEVIATION FROM THIS DESIGN; ANY FAILURE TO BUILD THE TRUSS IN CONFORMANCE WITH TPI; OR FABRICATING, HANDLING, SHIPPING, INSTALLING & BRACING OF TRUSSES. DESIGN CONFORMS WITH APPLICABLE PROVISIONS OF NDS (NATIONAL DESIGN SPEC, BY AF&PA) AND TPI. ALPINE CONNECTOR PLATES ARE MADE OF 20/18/16GA (W,H/S/K) ASTM A653 GRADE 40/60 (W, K/H,S) GALV. STEEL. APPLY PLATES TO EACH FACE OF TRUSS AND, UNLESS OTHERWISE LOCATED ON THIS DESIGN, POSITION PER DRAWINGS 160A-Z. ANY INSPECTION OF PLATES FOLLOWED BY (I) SHALL BE PER ANNEX A3 OF TP11-2002 SEC.3. A SEAL ON THIS DRAWING INDICATES ACCEPTANCE OF PROFESSIONAL ENGINEERING RESPONSIBILITY SOLELY FOR THE TRUSS COMPONENT DESIGN SHOWN. THE SUITABILITY AND USE OF THIS COMPONENT FOR ANY BUILDING IS THE RESPONSIBILITY OF THE BUILDING DESIGNER PER ANSI/TPI 1 SEC. 2.

ALPINE
Alpine Engineered Products, Inc.
1950 Marley Drive
Haines City, FL 33844
FL Certificate of Authorization # 567

JAMES F. COLLINS, JR. LICENSE No. 57212 STATE OF FLORIDA PROFESSIONAL ENGINEER

Oct 17, 06

TC LL	20.0 PSF	REF	R215-- 46918
TC DL	10.0 PSF	DATE	10/16/06
BC DL	10.0 PSF	DRW	HCUSR215 06289247
BC LL	0.0 PSF	HC-ENG	DAB/AP *
TOT.LD.	40.0 PSF	SEQN-	36086
DUR.FAC.	1.25	FROM	CAW
SPACING	24.0"	JREF-	1T1I215_Z07

THIS DWG PREPARED FROM COMPUTER INPUT (LOADS & DIMENSIONS) SUBMITTED BY TRUSS MFR.

Top chord 2x4 SP #2 N
Bot chord 2x4 SP #2 N
Webs 2x4 SP #2 N

Wind reactions based on MWFRS pressures.

In lieu of structural panels use purlins to brace all flat TC @ 24" OC.

Plates sized for a minimum of 3.00 sq.in./piece.

110 mph wind, 15.00 ft mean hgt, ASCE 7-02, CLOSED bldg, not located within 4.50 ft from roof edge, CAT II, EXP B, wind TC DL=5.0 psf, wind BC DL=5.0 psf.

Right end vertical not exposed to wind pressure.

Deflection meets L/240 live and L/180 total load.

The overall height of this truss excluding overhang is 3-3-7.

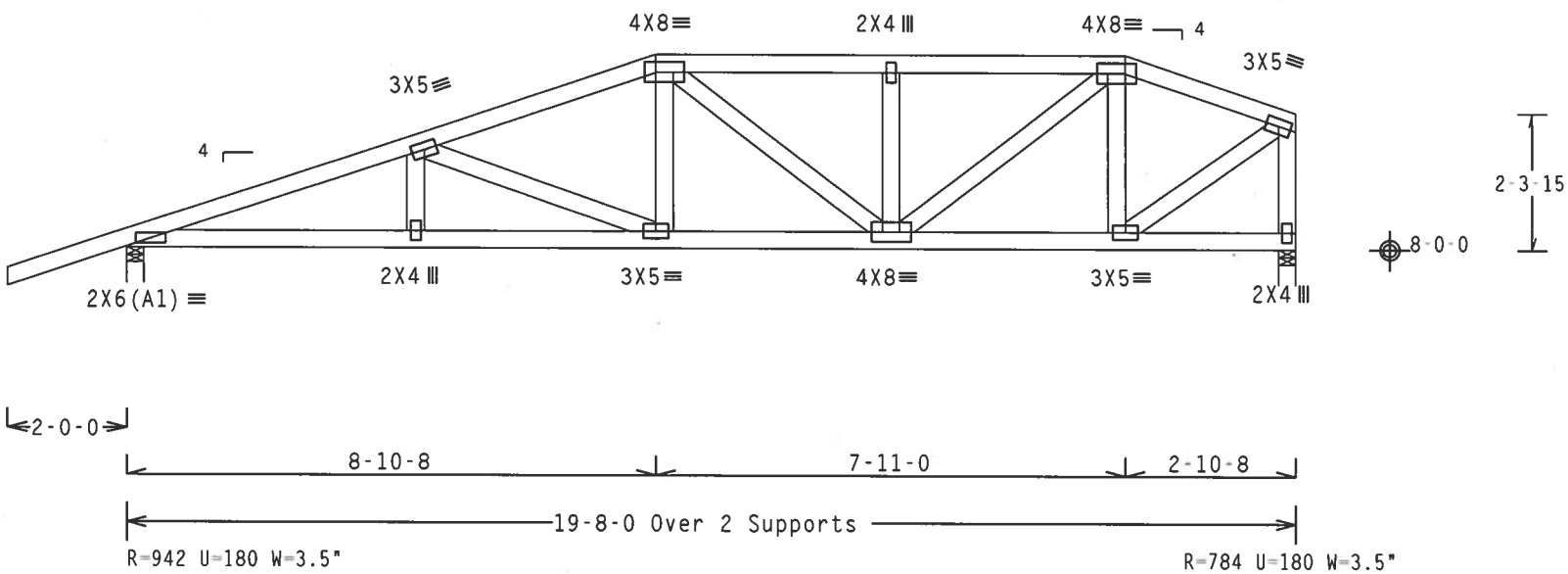

Design Crit: TPI-2002(STD)/FBC

PLT TYP. Wave — Cq/RT=1.00(1.25)/10(0) 7.25.0503 — QTY:1 — FL/-/5/-/-/R/- — Scale =.3125"/Ft.

ALPINE
Alpine Engineered Products, Inc.
1950 Marley Drive
Haines City, FL 33844
FL Certificate of Authorization # 567

WARNING TRUSSES REQUIRE EXTREME CARE IN FABRICATION, HANDLING, SHIPPING, INSTALLING AND BRACING. REFER TO BCSI 1-03 (BUILDING COMPONENT SAFETY INFORMATION), PUBLISHED BY TPI (TRUSS PLATE INSTITUTE, 583 D'ONOFRIO DR., SUITE 200, MADISON, WI 53719) AND WTCA (WOOD TRUSS COUNCIL OF AMERICA, 6300 ENTERPRISE LN, MADISON, WI 53719) FOR SAFETY PRACTICES PRIOR TO PERFORMING THESE FUNCTIONS. UNLESS OTHERWISE INDICATED, TOP CHORD SHALL HAVE PROPERLY ATTACHED STRUCTURAL PANELS AND BOTTOM CHORD SHALL HAVE A PROPERLY ATTACHED RIGID CEILING.

IMPORTANTFURNISH A COPY OF THIS DESIGN TO THE INSTALLATION CONTRACTOR. ALPINE ENGINEERED PRODUCTS, INC. SHALL NOT BE RESPONSIBLE FOR ANY DEVIATION FROM THIS DESIGN; ANY FAILURE TO BUILD THE TRUSS IN CONFORMANCE WITH TPI; OR FABRICATING, HANDLING, SHIPPING, INSTALLING & BRACING OF TRUSSES DESIGN CONFORMS WITH APPLICABLE PROVISIONS OF NDS (NATIONAL DESIGN SPEC. BY AF&PA) AND TPI. ALPINE CONNECTOR PLATES ARE MADE OF 20/18/16GA (W,H/S/K) ASTM A653 GRADE 40/60 (W, K/H,S) GALV. STEEL. APPLY PLATES TO EACH FACE OF TRUSS AND, UNLESS OTHERWISE LOCATED ON THIS DESIGN, POSITION PER DRAWINGS 160A-Z. ANY INSPECTION OF PLATES FOLLOWED BY (1) SHALL BE PER ANNEX A3 OF TPI1-2002 SEC.3. A SEAL ON THIS DRAWING INDICATES ACCEPTANCE OF PROFESSIONAL ENGINEERING RESPONSIBILITY SOLELY FOR THE TRUSS COMPONENT DESIGN SHOWN. THE SUITABILITY AND USE OF THIS COMPONENT FOR ANY BUILDING IS THE RESPONSIBILITY OF THE BUILDING DESIGNER PER ANSI/TPI 1 SEC. 2.

JAMES E. GOLKING, JR. LICENSE No. 52212 STATE OF FLORIDA PROFESSIONAL ENGINEER

Oct 17 '06

TC LL	20.0 PSF	REF	R215-- 46919
TC DL	10.0 PSF	DATE	10/16/06
BC DL	10.0 PSF	DRW	HCUSR215 06289248
BC LL	0.0 PSF	HC-ENG	DAB/AP *
TOT.LD.	40.0 PSF	SEQN-	36084
DUR.FAC.	1.25	FROM	CAW
SPACING	24.0"	JREF-	1T1I215_Z07

THIS DWG PREPARED FROM COMPUTER INPUT (LOADS & DIMENSIONS) SUBMITTED BY TRUSS MFR.

Top chord 2x6 SP #2 N
Bot chord 2x6 SP #2 Dense
Webs 2x4 SP #2 N

Wind reactions based on MWFRS pressures.

In lieu of structural panels use purlins to brace all flat TC @ 24" OC.

Plates sized for a minimum of 3.00 sq.in./piece.

110 mph wind, 15.00 ft mean hgt, ASCE 7-02, CLOSED bldg, not located within 4.50 ft from roof edge, CAT II, EXP B, wind TC DL=5.0 psf, wind BC DL=5.0 psf.

Right end vertical not exposed to wind pressure.

Deflection meets L/240 live and L/180 total load.

The overall height of this truss excluding overhang is 3-11-7.

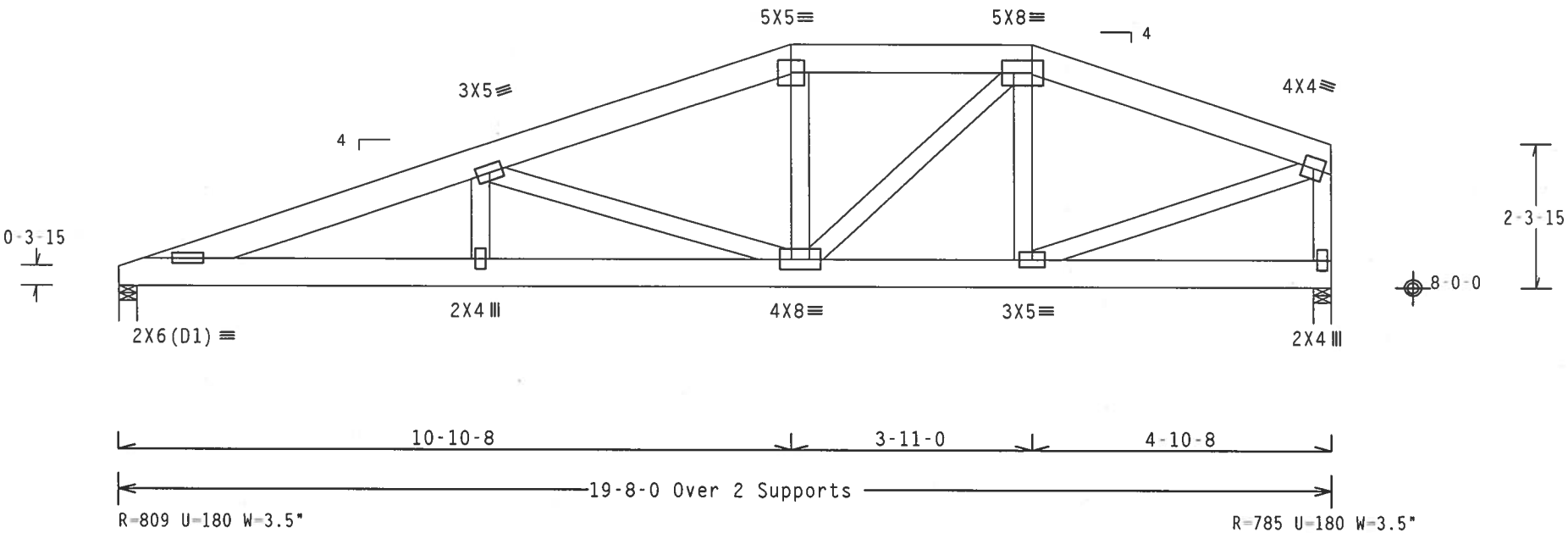

Design Crit: TPI-2002(STD)/FBC

PLT TYP. Wave Cq/RT=1.00(1.25)/10(0) 7.25.0503 QTY:1 FL/-/5/-/-/R/- Scale =.375"/Ft.

ALPINE
Alpine Engineered Products, Inc.
1950 Marley Drive
Haines City, FL 33844
FL Certificate of Authorization # 567

WARNING TRUSSES REQUIRE EXTREME CARE IN FABRICATION, HANDLING, SHIPPING, INSTALLING AND BRACING. REFER TO BCSI 1-03 (BUILDING COMPONENT SAFETY INFORMATION), PUBLISHED BY TPI (TRUSS PLATE INSTITUTE, 583 D'ONOFRIO DR., SUITE 200, MADISON, WI 53719) AND WTCA (WOOD TRUSS COUNCIL OF AMERICA, 6300 ENTERPRISE LN, MADISON, WI 53719) FOR SAFETY PRACTICES PRIOR TO PERFORMING THESE FUNCTIONS. UNLESS OTHERWISE INDICATED, TOP CHORD SHALL HAVE PROPERLY ATTACHED STRUCTURAL PANELS AND BOTTOM CHORD SHALL HAVE A PROPERLY ATTACHED RIGID CEILING.

IMPORTANTFURNISH A COPY OF THIS DESIGN TO THE INSTALLATION CONTRACTOR. ALPINE ENGINEERED PRODUCTS, INC. SHALL NOT BE RESPONSIBLE FOR ANY DEVIATION FROM THIS DESIGN; ANY FAILURE TO BUILD THE TRUSS IN CONFORMANCE WITH TPI; OR FABRICATING, HANDLING, SHIPPING, INSTALLING & BRACING OF TRUSSES. DESIGN CONFORMS WITH APPLICABLE PROVISIONS OF NDS (NATIONAL DESIGN SPEC. BY AF&PA) AND TPI. ALPINE CONNECTOR PLATES ARE MADE OF 20/18/16GA (W.H/S/K) ASTM A653 GRADE 40/60 (W. K/H.S) GALV. STEEL. APPLY PLATES TO EACH FACE OF TRUSS AND, UNLESS OTHERWISE LOCATED ON THIS DESIGN, POSITION PER DRAWINGS 160A-Z. ANY INSPECTION OF PLATES FOLLOWED BY (1) SHALL BE PER ANNEX A3 OF TPI1-2002 SEC.3. A SEAL ON THIS DRAWING INDICATES ACCEPTANCE OF PROFESSIONAL ENGINEERING RESPONSIBILITY SOLELY FOR THE TRUSS COMPONENT DESIGN SHOWN. THE SUITABILITY AND USE OF THIS COMPONENT FOR ANY BUILDING IS THE RESPONSIBILITY OF THE BUILDING DESIGNER PER ANSI/TPI 1 SEC. 2.

JAMES F. COLLINS, JR. LICENSE No. 52212 STATE OF FLORIDA PROFESSIONAL ENGINEER
Oct 17 '06

TC LL	20.0 PSF	REF R215-- 46920
TC DL	10.0 PSF	DATE 10/16/06
BC DL	10.0 PSF	DRW HCUSR215 06289270
BC LL	0.0 PSF	HC-ENG DAB/AP
TOT.LD.	40.0 PSF	SEQN- 36082
DUR.FAC.	1.25	FROM CAW
SPACING	24.0"	JREF- 1T1I215_Z07

THIS DWG PREPARED FROM COMPUTER INPUT (LOADS & DIMENSIONS) SUBMITTED BY TRUSS MFR.

Top chord 2x4 SP #2 N
Bot chord 2x4 SP #2 N
Webs 2x4 SP #2 N

Wind reactions based on MWFRS pressures.

In lieu of structural panels use purlins to brace all flat TC @ 24" OC.

Plates sized for a minimum of 3.00 sq.in./piece.

110 mph wind, 15.00 ft mean hgt, ASCE 7-02, CLOSED bldg, not located within 4.50 ft from roof edge, CAT II, EXP B, wind TC DL=5.0 psf, wind BC DL=5.0 psf.

Right end vertical not exposed to wind pressure.

Deflection meets L/240 live and L/180 total load.

The overall height of this truss excluding overhang is 4-7-4.

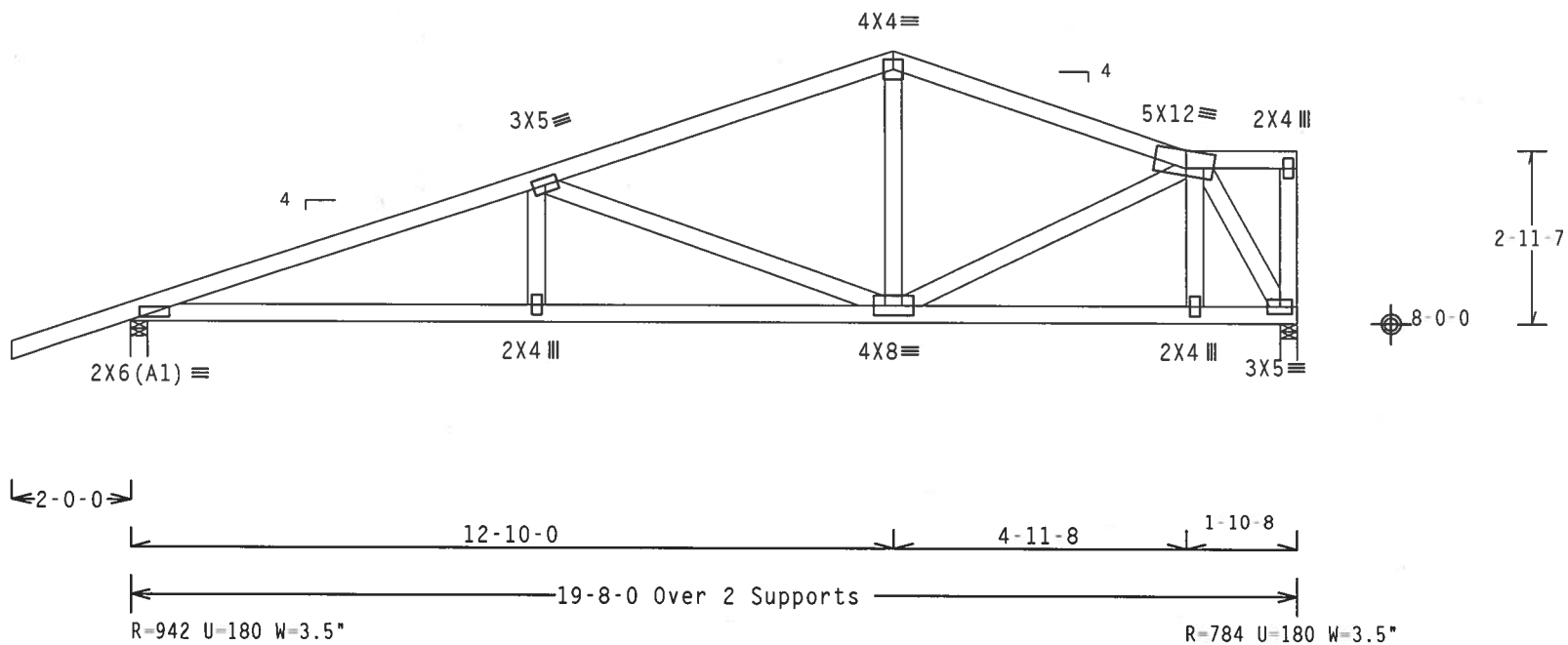

Design Crit: TPI-2002(STD)/FBC

PLT TYP. Wave Cq/RT=1.00(1.25)/10(0) 7.25.0503.00 QTY:1 FL/-/5/-/-/R/- Scale =.3125"/Ft.

ALPINE
Alpine Engineered Products, Inc.
1950 Marley Drive
Haines City, FL 33844
FL Certificate of Authorization # 567

WARNING TRUSSES REQUIRE EXTREME CARE IN FABRICATION, HANDLING, SHIPPING, INSTALLING AND BRACING. REFER TO BCSI 1-03 (BUILDING COMPONENT SAFETY INFORMATION), PUBLISHED BY TPI (TRUSS PLATE INSTITUTE, 583 D'ONOFRIO DR., SUITE 200, MADISON, WI 53719) AND WTCA (WOOD TRUSS COUNCIL OF AMERICA, 6300 ENTERPRISE LN. MADISON, WI 53719) FOR SAFETY PRACTICES PRIOR TO PERFORMING THESE FUNCTIONS. UNLESS OTHERWISE INDICATED, TOP CHORD SHALL HAVE PROPERLY ATTACHED STRUCTURAL PANELS AND BOTTOM CHORD SHALL HAVE A PROPERLY ATTACHED RIGID CEILING.

IMPORTANTFURNISH A COPY OF THIS DESIGN TO THE INSTALLATION CONTRACTOR. ALPINE ENGINEERED PRODUCTS, INC. SHALL NOT BE RESPONSIBLE FOR ANY DEVIATION FROM THIS DESIGN; ANY FAILURE TO BUILD THE TRUSS IN CONFORMANCE WITH TPI; OR FABRICATING, HANDLING, SHIPPING, INSTALLING & BRACING OF TRUSSES. DESIGN CONFORMS WITH APPLICABLE PROVISIONS OF NDS (NATIONAL DESIGN SPEC. BY AF&PA) AND TPI. ALPINE CONNECTOR PLATES ARE MADE OF 20/18/16GA (W,H/S/K) ASTM A653 GRADE 40/60 (W, K/H,S) GALV. STEEL. APPLY PLATES TO EACH FACE OF TRUSS AND, UNLESS OTHERWISE LOCATED ON THIS DESIGN, POSITION PER DRAWINGS 160A-Z. ANY INSPECTION OF PLATES FOLLOWED BY (1) SHALL BE PER ANNEX A3 OF TPI1-2002 SEC.3. A SEAL ON THIS DRAWING INDICATES ACCEPTANCE OF PROFESSIONAL ENGINEERING RESPONSIBILITY SOLELY FOR THE TRUSS COMPONENT DESIGN SHOWN. THE SUITABILITY AND USE OF THIS COMPONENT FOR ANY BUILDING IS THE RESPONSIBILITY OF THE BUILDING DESIGNER PER ANSI/TPI 1 SEC. 2.

JAMES F. COLVINS JR. LICENSED No. 52212 STATE OF FLORIDA PROFESSIONAL ENGINEER

TC LL	20.0 PSF	REF	R215-- 46921
TC DL	10.0 PSF	DATE	10/16/06
BC DL	10.0 PSF	DRW	HCUSR215 06289249
BC LL	0.0 PSF	HC-ENG	DAB/AP *
TOT.LD.	40.0 PSF	SEQN-	36286
DUR.FAC.	1.25	FROM	CAW
SPACING	24.0"	JREF-	1T1I215_Z07

THIS DWG PREPARED FROM COMPUTER INPUT (LOADS & DIMENSIONS) SUBMITTED BY TRUSS MFR.

Top chord 2x4 SP #2 N
Bot chord 2x4 SP #2 N
Webs 2x4 SP #2 N

Wind reactions based on MWFRS pressures.

In lieu of structural panels use purlins to brace all flat TC @ 24" OC.

Plates sized for a minimum of 3.00 sq.in./piece.

110 mph wind, 15.00 ft mean hgt, ASCE 7-02, CLOSED bldg, not located within 4.50 ft from roof edge, CAT II, EXP B, wind TC DL=5.0 psf, wind BC DL=5.0 psf.

Right end vertical not exposed to wind pressure.

Deflection meets L/240 live and L/180 total load.

The overall height of this truss excluding overhang is 4-7-4.

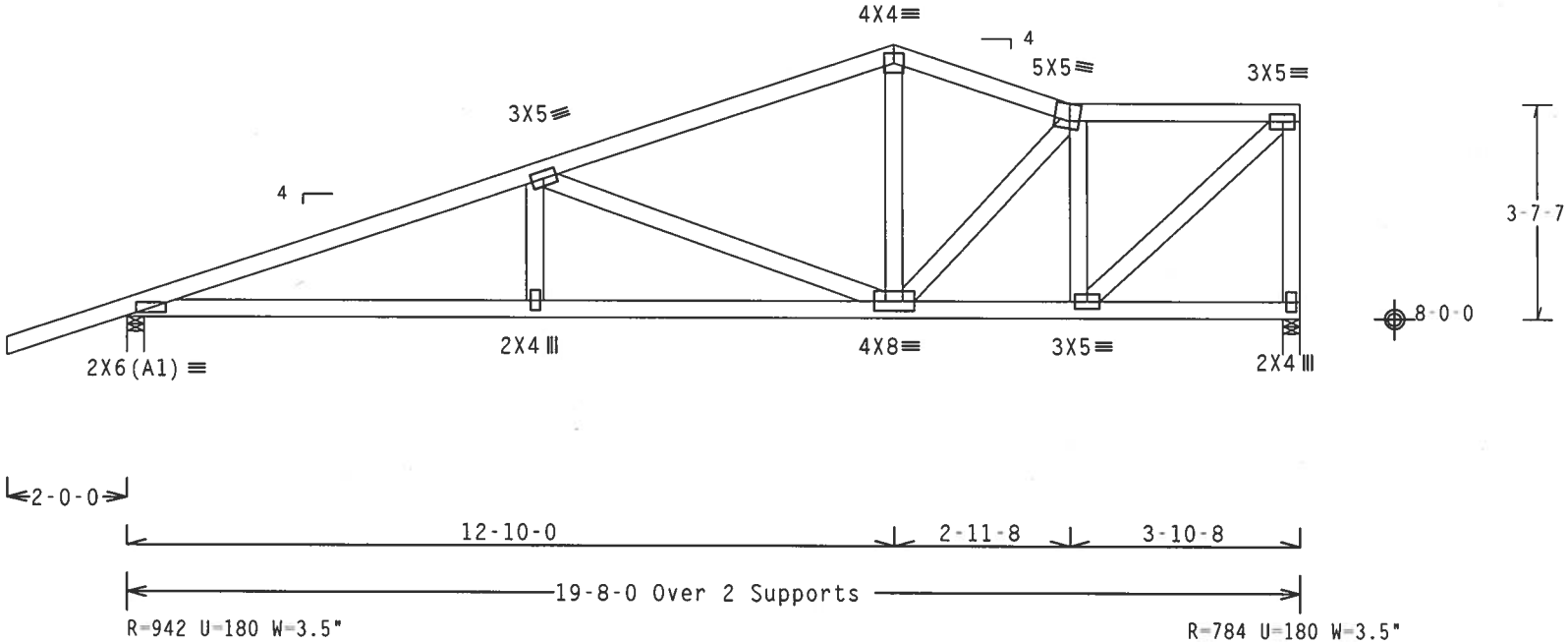

Design Crit: TPI-2002(STD)/FBC

PLT TYP. Wave — Cq/RT=1.00(1.25)/10(0) 7.25.0503 — QTY: 1 — FL/-/5/-/-/R/- — Scale =.3125"/Ft.

ALPINE
Alpine Engineered Products, Inc.
1950 Marley Drive
Haines City, FL 33844
FL Certificate of Authorization # 567

WARNING TRUSSES REQUIRE EXTREME CARE IN FABRICATION, HANDLING, SHIPPING, INSTALLING AND BRACING. REFER TO BCSI 1-03 (BUILDING COMPONENT SAFETY INFORMATION), PUBLISHED BY TPI (TRUSS PLATE INSTITUTE, 583 D'ONOFRIO DR., SUITE 200, MADISON, WI 53719) AND WTCA (WOOD TRUSS COUNCIL OF AMERICA, 6300 ENTERPRISE LN, MADISON, WI 53719) FOR SAFETY PRACTICES PRIOR TO PERFORMING THESE FUNCTIONS. UNLESS OTHERWISE INDICATED, TOP CHORD SHALL HAVE PROPERLY ATTACHED STRUCTURAL PANELS AND BOTTOM CHORD SHALL HAVE A PROPERLY ATTACHED RIGID CEILING.

IMPORTANTFURNISH A COPY OF THIS DESIGN TO THE INSTALLATION CONTRACTOR. ALPINE ENGINEERED PRODUCTS, INC. SHALL NOT BE RESPONSIBLE FOR ANY DEVIATION FROM THIS DESIGN; ANY FAILURE TO BUILD THE TRUSS IN CONFORMANCE WITH TPI; OR FABRICATING, HANDLING, SHIPPING, INSTALLING & BRACING OF TRUSSES. DESIGN CONFORMS WITH APPLICABLE PROVISIONS OF NDS (NATIONAL DESIGN SPEC. BY AF&PA) AND TPI. ALPINE CONNECTOR PLATES ARE MADE OF 20/18/16GA (W,H/S/K) ASTM A653 GRADE 40/60 (W, K/H,S) GALV. STEEL. APPLY PLATES TO EACH FACE OF TRUSS AND, UNLESS OTHERWISE LOCATED ON THIS DESIGN, POSITION PER DRAWINGS 160A-Z. ANY INSPECTION OF PLATES FOLLOWED BY (1) SHALL BE PER ANNEX A3 OF TPI1-2002 SEC.3. A SEAL ON THIS DRAWING INDICATES ACCEPTANCE OF PROFESSIONAL ENGINEERING RESPONSIBILITY SOLELY FOR THE TRUSS COMPONENT DESIGN SHOWN. THE SUITABILITY AND USE OF THIS COMPONENT FOR ANY BUILDING IS THE RESPONSIBILITY OF THE BUILDING DESIGNER PER ANSI/TPI 1 SEC. 2.

JAMES F. COLLINS JR. LICENSE No. 52212 STATE OF FLORIDA PROFESSIONAL ENGINEER
Oct 17 '06

TC LL	20.0 PSF	REF R215-- 46922
TC DL	10.0 PSF	DATE 10/16/06
BC DL	10.0 PSF	DRW HCUSR215 06289250
BC LL	0.0 PSF	HC-ENG DAB/AP *
TOT.LD.	40.0 PSF	SEQN- 36079
DUR.FAC.	1.25	FROM CAW
SPACING	24.0"	JREF- 1T1I215_Z07

Top chord 2x4 SP #2 N
Bot chord 2x4 SP #2 N
Webs 2x4 SP #2 N

Wind reactions based on MWFRS pressures.

In lieu of structural panels use purlins to brace all flat TC @ 24" OC.

Plates sized for a minimum of 3.00 sq.in./piece.

110 mph wind, 15.00 ft mean hgt, ASCE 7-02, CLOSED bldg, not located within 4.50 ft from roof edge, CAT II, EXP B, wind TC DL=5.0 psf, wind BC DL=5.0 psf.

Right end vertical not exposed to wind pressure.

Deflection meets L/240 live and L/180 total load.

The overall height of this truss excluding overhang is 4-7-4.

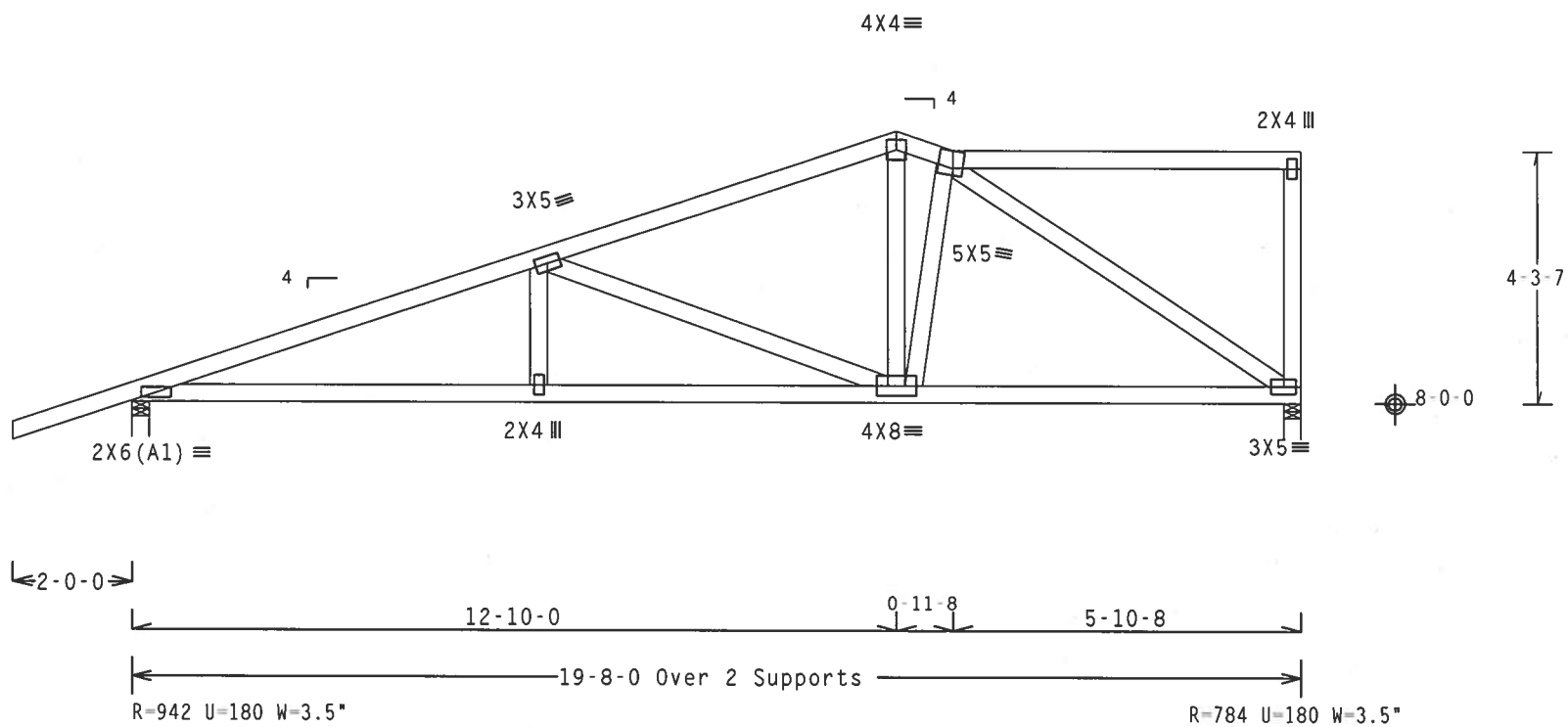

Design Crit: TPI-2002(STD)/FBC

PLT TYP. Wave — Cq/RT=1.00(1.25)/10(0) 7.25.0503 — QTY:1 — FL/-/5/-/-/R/- — Scale =.3125"/Ft.

ALPINE
Alpine Engineered Products, Inc.
1950 Marley Drive
Haines City, FL 33844
FL Certificate of Authorization # 567

WARNING TRUSSES REQUIRE EXTREME CARE IN FABRICATION, HANDLING, SHIPPING, INSTALLING AND BRACING. REFER TO BCSI 1-03 (BUILDING COMPONENT SAFETY INFORMATION), PUBLISHED BY TPI (TRUSS PLATE INSTITUTE, 583 D'ONOFRIO DR., SUITE 200, MADISON, WI 53719) AND WTCA (WOOD TRUSS COUNCIL OF AMERICA, 6300 ENTERPRISE LN, MADISON, WI 53719) FOR SAFETY PRACTICES PRIOR TO PERFORMING THESE FUNCTIONS. UNLESS OTHERWISE INDICATED, TOP CHORD SHALL HAVE PROPERLY ATTACHED STRUCTURAL PANELS AND BOTTOM CHORD SHALL HAVE A PROPERLY ATTACHED RIGID CEILING.

IMPORTANTFURNISH A COPY OF THIS DESIGN TO THE INSTALLATION CONTRACTOR. ALPINE ENGINEERED PRODUCTS, INC. SHALL NOT BE RESPONSIBLE FOR ANY DEVIATION FROM THIS DESIGN; ANY FAILURE TO BUILD THE TRUSS IN CONFORMANCE WITH TPI; OR FABRICATING, HANDLING, SHIPPING, INSTALLING & BRACING OF TRUSSES. DESIGN CONFORMS WITH APPLICABLE PROVISIONS OF NDS (NATIONAL DESIGN SPEC. BY AF&PA) AND TPI. ALPINE CONNECTOR PLATES ARE MADE OF 20/18/16GA (W,H/S/K) ASTM A653 GRADE 40/60 (W, K/H,S) GALV. STEEL. APPLY PLATES TO EACH FACE OF TRUSS AND, UNLESS OTHERWISE LOCATED ON THIS DESIGN, POSITION PER DRAWINGS 160A-Z. ANY INSPECTION OF PLATES FOLLOWED BY (I) SHALL BE PER ANNEX A3 OF TPI1-2002 SEC.3. A SEAL ON THIS DRAWING INDICATES ACCEPTANCE OF PROFESSIONAL ENGINEERING RESPONSIBILITY SOLELY FOR THE TRUSS COMPONENT DESIGN SHOWN. THE SUITABILITY AND USE OF THIS COMPONENT FOR ANY BUILDING IS THE RESPONSIBILITY OF THE BUILDING DESIGNER PER ANSI/TPI 1 SEC. 2.

JAMES F. COLLINS JR. LICENSE No. 52212 STATE OF FLORIDA PROFESSIONAL ENGINEER

Oct 17, 06

TC LL	20.0 PSF	REF R215-- 46923
TC DL	10.0 PSF	DATE 10/16/06
BC DL	10.0 PSF	DRW HCUSR215 06289251
BC LL	0.0 PSF	HC-ENG DAB/AP *
TOT.LD.	40.0 PSF	SEQN- 36077
DUR.FAC.	1.25	FROM CAW
SPACING	24.0"	JREF- 1T1I215_Z07

THIS DWG PREPARED FROM COMPUTER INPUT (LOADS & DIMENSIONS) SUBMITTED BY TRUSS MFR.

Top chord 2x4 SP #2 N
Bot chord 2x4 SP #2 N
Webs 2x4 SP #2 N

Wind reactions based on MWFRS pressures.

In lieu of structural panels use purlins to brace all flat TC @ 24" OC.

Plates sized for a minimum of 3.00 sq.in./piece.

110 mph wind, 15.00 ft mean hgt, ASCE 7-02, CLOSED bldg, not located within 4.50 ft from roof edge, CAT II, EXP B, wind TC DL=5.0 psf, wind BC DL=5.0 psf.

Right end vertical not exposed to wind pressure.

Deflection meets L/240 live and L/180 total load.

The overall height of this truss excluding overhang is 4-11-7.

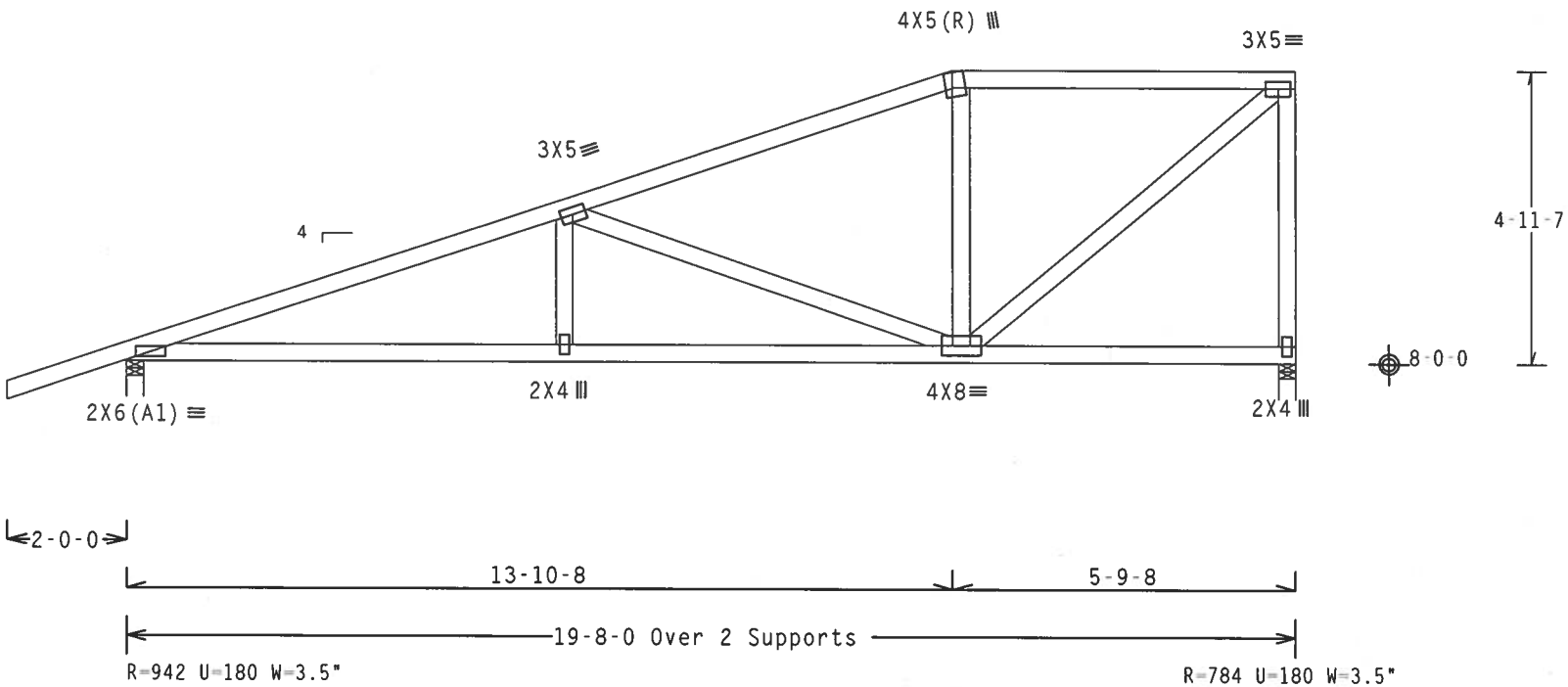

Design Crit: TPI-2002(STD)/FBC

PLT TYP. Wave

Cq/RT=1.00(1.25)/10(0) 7.25.0503 QTY:1 FL/-/5/-/-/R/- Scale =.3125"/Ft.

ALPINE
Alpine Engineered Products, Inc.
1950 Marley Drive
Haines City, FL 33844
FL Certificate of Authorization # 567

WARNING TRUSSES REQUIRE EXTREME CARE IN FABRICATION, HANDLING, SHIPPING, INSTALLING AND BRACING. REFER TO BCSI 1-03 (BUILDING COMPONENT SAFETY INFORMATION), PUBLISHED BY TPI (TRUSS PLATE INSTITUTE, 583 D'ONOFRIO DR., SUITE 200, MADISON, WI 53719) AND WTCA (WOOD TRUSS COUNCIL OF AMERICA, 6300 ENTERPRISE LN, MADISON, WI 53719) FOR SAFETY PRACTICES PRIOR TO PERFORMING THESE FUNCTIONS. UNLESS OTHERWISE INDICATED, TOP CHORD SHALL HAVE PROPERLY ATTACHED STRUCTURAL PANELS AND BOTTOM CHORD SHALL HAVE A PROPERLY ATTACHED RIGID CEILING.

IMPORTANTFURNISH A COPY OF THIS DESIGN TO THE INSTALLATION CONTRACTOR. ALPINE ENGINEERED PRODUCTS, INC. SHALL NOT BE RESPONSIBLE FOR ANY DEVIATION FROM THIS DESIGN; ANY FAILURE TO BUILD THE TRUSS IN CONFORMANCE WITH TPI; OR FABRICATING, HANDLING, SHIPPING, INSTALLING & BRACING OF TRUSSES. DESIGN CONFORMS WITH APPLICABLE PROVISIONS OF NDS (NATIONAL DESIGN SPEC. BY AF&PA) AND TPI. ALPINE CONNECTOR PLATES ARE MADE OF 20/18/16GA (W,H/S/K) ASTM A653 GRADE 40/60 (W, K/H,S) GALV. STEEL. APPLY PLATES TO EACH FACE OF TRUSS AND, UNLESS OTHERWISE LOCATED ON THIS DESIGN, POSITION PER DRAWINGS 160A-Z. ANY INSPECTION OF PLATES FOLLOWED BY (1) SHALL BE PER ANNEX A3 OF TPI1-2002 SEC.3. A SEAL ON THIS DRAWING INDICATES ACCEPTANCE OF PROFESSIONAL ENGINEERING RESPONSIBILITY SOLELY FOR THE TRUSS COMPONENT DESIGN SHOWN. THE SUITABILITY AND USE OF THIS COMPONENT FOR ANY BUILDING IS THE RESPONSIBILITY OF THE BUILDING DESIGNER PER ANSI/TPI 1 SEC. 2.

JAMES F. COLLINS, JR. LICENSE No. 52212 STATE OF FLORIDA PROFESSIONAL ENGINEER

Oct 17 06

TC LL	20.0 PSF	REF R215-- 46924
TC DL	10.0 PSF	DATE 10/16/06
BC DL	10.0 PSF	DRW HCUSR215 06289252
BC LL	0.0 PSF	HC-ENG DAB/AP *
TOT.LD.	40.0 PSF	SEQN- 36075
DUR.FAC.	1.25	FROM CAW
SPACING	24.0"	JREF- 1T1I215_Z07

THIS DWG PREPARED FROM COMPUTER INPUT (LOADS & DIMENSIONS) SUBMITTED BY TRUSS MFR.

Top chord 2x4 SP #2 N
Bot chord 2x4 SP #2 N
Webs 2x4 SP #2 N

Wind reactions based on MWFRS pressures.

In lieu of structural panels use purlins to brace all flat TC @ 24" OC.

Plates sized for a minimum of 3.00 sq.in./piece.

110 mph wind, 15.00 ft mean hgt, ASCE 7-02, CLOSED bldg, not located within 4.50 ft from roof edge, CAT II, EXP B, wind TC DL=5.0 psf, wind BC DL=5.0 psf.

Right end vertical not exposed to wind pressure.

Deflection meets L/240 live and L/180 total load.

The overall height of this truss excluding overhang is 5-7-7.

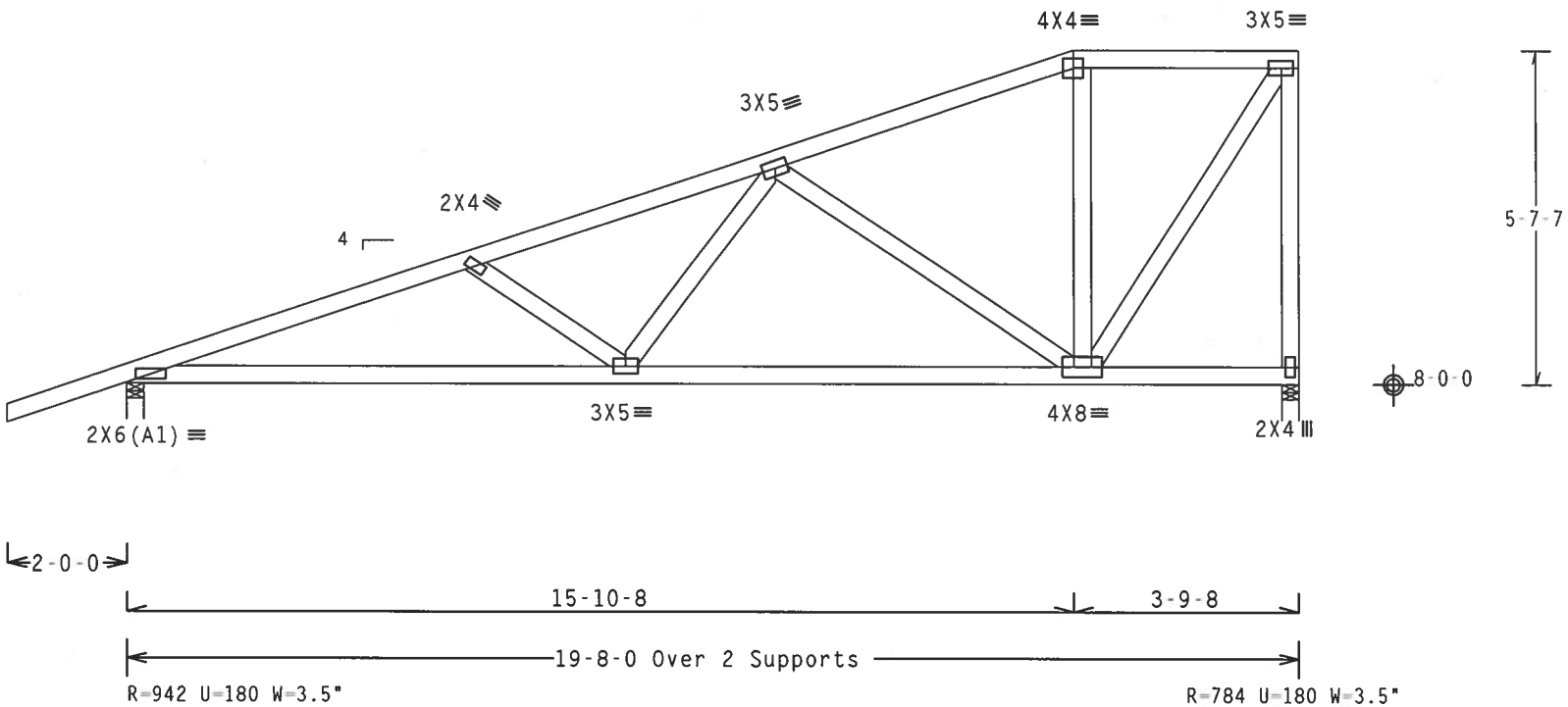

Design Crit: TPI-2002(STD)/FBC

PLT TYP. Wave | Cq/RT=1.00(1.25)/10(0) 7.25.0503.00 | QTY:1 | FL/-/5/-/-/R/- | Scale =.3125"/Ft.

ALPINE
Alpine Engineered Products, Inc.
1950 Marley Drive
Haines City, FL 33844
FL Certificate of Authorization # 567

WARNING TRUSSES REQUIRE EXTREME CARE IN FABRICATION, HANDLING, SHIPPING, INSTALLING AND BRACING. REFER TO BCSI 1-03 (BUILDING COMPONENT SAFETY INFORMATION), PUBLISHED BY TPI (TRUSS PLATE INSTITUTE, 583 D'ONOFRIO DR., SUITE 200, MADISON, WI 53719) AND WTCA (WOOD TRUSS COUNCIL OF AMERICA, 6300 ENTERPRISE LN, MADISON, WI 53719) FOR SAFETY PRACTICES PRIOR TO PERFORMING THESE FUNCTIONS. UNLESS OTHERWISE INDICATED, TOP CHORD SHALL HAVE PROPERLY ATTACHED STRUCTURAL PANELS AND BOTTOM CHORD SHALL HAVE A PROPERLY ATTACHED RIGID CEILING.

IMPORTANTFURNISH A COPY OF THIS DESIGN TO THE INSTALLATION CONTRACTOR. ALPINE ENGINEERED PRODUCTS, INC. SHALL NOT BE RESPONSIBLE FOR ANY DEVIATION FROM THIS DESIGN; ANY FAILURE TO BUILD THE TRUSS IN CONFORMANCE WITH TPI; OR FABRICATING, HANDLING, SHIPPING, INSTALLING & BRACING OF TRUSSES. DESIGN CONFORMS WITH APPLICABLE PROVISIONS OF NDS (NATIONAL DESIGN SPEC. BY AF&PA) AND TPI. ALPINE CONNECTOR PLATES ARE MADE OF 20/18/16GA (W,H/S/K) ASTM A653 GRADE 40/60 (W, K/H,S) GALV. STEEL. APPLY PLATES TO EACH FACE OF TRUSS AND, UNLESS OTHERWISE LOCATED ON THIS DESIGN, POSITION PER DRAWINGS 160A-Z. ANY INSPECTION OF PLATES FOLLOWED BY (I) SHALL BE PER ANNEX A3 OF TPI1-2002 SEC.3. A SEAL ON THIS DRAWING INDICATES ACCEPTANCE OF PROFESSIONAL ENGINEERING RESPONSIBILITY SOLELY FOR THE TRUSS COMPONENT DESIGN SHOWN. THE SUITABILITY AND USE OF THIS COMPONENT FOR ANY BUILDING IS THE RESPONSIBILITY OF THE BUILDING DESIGNER PER ANSI/TPI 1 SEC. 2.

JAMES E. COLLINS JR. LICENSE No. 52212 STATE OF FLORIDA PROFESSIONAL ENGINEER

Oct 17, 06

TC LL	20.0 PSF	REF R215-- 46925
TC DL	10.0 PSF	DATE 10/16/06
BC DL	10.0 PSF	DRW HCUSR215 06289253
BC LL	0.0 PSF	HC-ENG DAB/AP *
TOT.LD.	40.0 PSF	SEQN- 36073
DUR.FAC.	1.25	FROM CAW
SPACING	24.0"	JREF- 1T1I215_Z07

THIS DWG PREPARED FROM COMPUTER INPUT (LOADS & DIMENSIONS) SUBMITTED BY TRUSS MFR.

Top chord 2x4 SP #2 N
Bot chord 2x4 SP #2 N
Webs 2x4 SP #2 N

Wind reactions based on MWFRS pressures.

In lieu of structural panels use purlins to brace all flat TC @ 24" OC.

Plates sized for a minimum of 3.00 sq.in./piece.

110 mph wind, 15.00 ft mean hgt, ASCE 7-02, CLOSED bldg, not located within 4.50 ft from roof edge, CAT II, EXP B, wind TC DL=5.0 psf, wind BC DL=5.0 psf.

Right end vertical not exposed to wind pressure.

Deflection meets L/240 live and L/180 total load.

The overall height of this truss excluding overhang is 6-3-7.

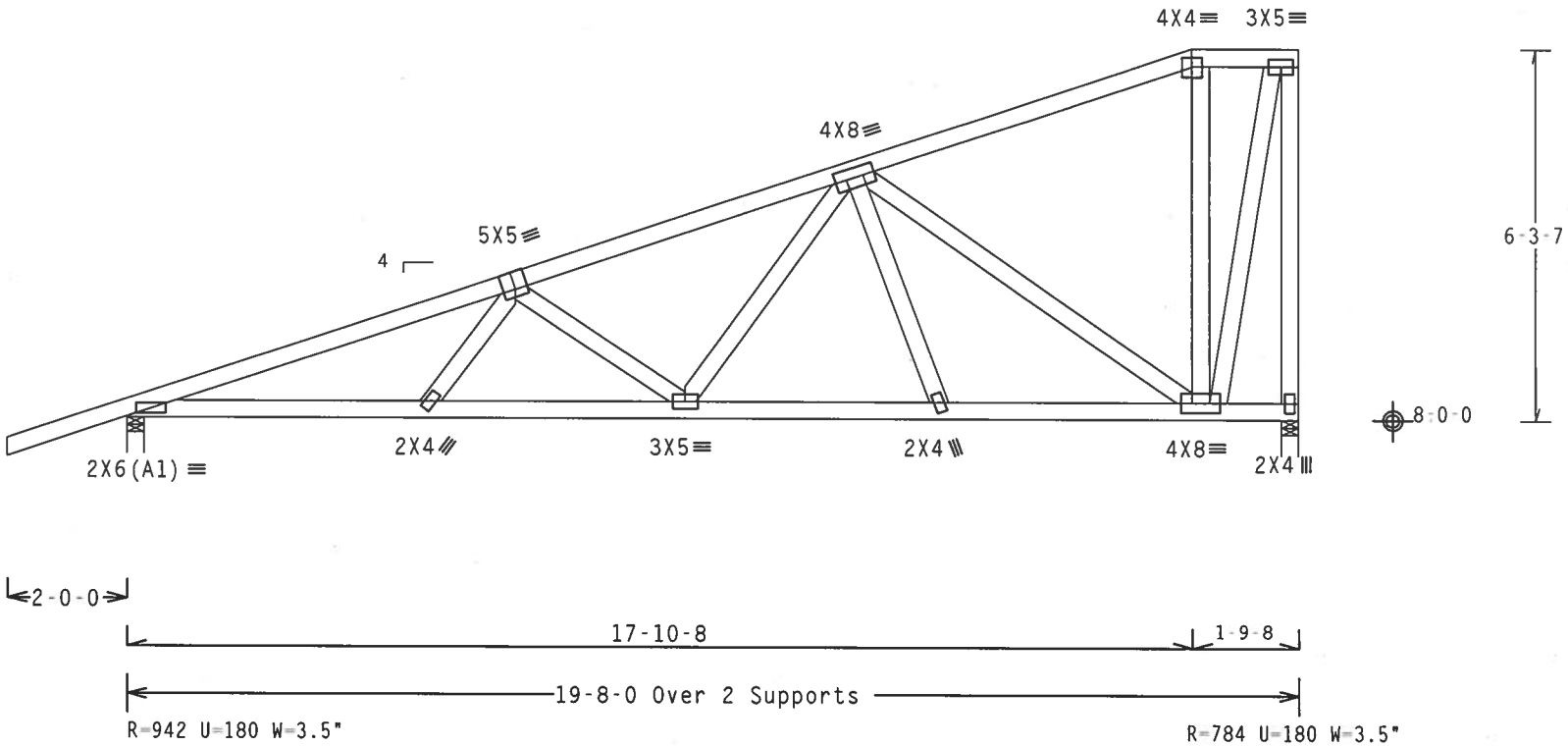

Design Crit: TPI-2002(STD)/FBC

PLT TYP. Wave — Cq/RT=1.00(1.25)/10(0) 7.25.0503.00 — QTY: 1 — FL/-/5/-/-/R/- — Scale =.3125"/Ft.

ALPINE
Alpine Engineered Products, Inc.
1950 Marley Drive
Haines City, FL 33844
FL Certificate of Authorization # 567

WARNING TRUSSES REQUIRE EXTREME CARE IN FABRICATION, HANDLING, SHIPPING, INSTALLING AND BRACING. REFER TO BCSI 1-03 (BUILDING COMPONENT SAFETY INFORMATION), PUBLISHED BY TPI (TRUSS PLATE INSTITUTE, 583 D'ONOFRIO DR., SUITE 200, MADISON, WI 53719) AND WTCA (WOOD TRUSS COUNCIL OF AMERICA, 6300 ENTERPRISE LN, MADISON, WI 53719) FOR SAFETY PRACTICES PRIOR TO PERFORMING THESE FUNCTIONS. UNLESS OTHERWISE INDICATED, TOP CHORD SHALL HAVE PROPERLY ATTACHED STRUCTURAL PANELS AND BOTTOM CHORD SHALL HAVE A PROPERLY ATTACHED RIGID CEILING.

IMPORTANTFURNISH A COPY OF THIS DESIGN TO THE INSTALLATION CONTRACTOR. ALPINE ENGINEERED PRODUCTS, INC. SHALL NOT BE RESPONSIBLE FOR ANY DEVIATION FROM THIS DESIGN; ANY FAILURE TO BUILD THE TRUSS IN CONFORMANCE WITH TPI; OR FABRICATING, HANDLING, SHIPPING, INSTALLING & BRACING OF TRUSSES. DESIGN CONFORMS WITH APPLICABLE PROVISIONS OF NDS (NATIONAL DESIGN SPEC. BY AF&PA) AND TPI. ALPINE CONNECTOR PLATES ARE MADE OF 20/18/16GA (W,H/S/K) ASTM A653 GRADE 40/60 (W, K/H,S) GALV. STEEL. APPLY PLATES TO EACH FACE OF TRUSS AND, UNLESS OTHERWISE LOCATED ON THIS DESIGN, POSITION PER DRAWINGS 160A-Z. ANY INSPECTION OF PLATES FOLLOWED BY (1) SHALL BE PER ANNEX A3 OF TPI1-2002 SEC.3. A SEAL ON THIS DRAWING INDICATES ACCEPTANCE OF PROFESSIONAL ENGINEERING RESPONSIBILITY SOLELY FOR THE TRUSS COMPONENT DESIGN SHOWN. THE SUITABILITY AND USE OF THIS COMPONENT FOR ANY BUILDING IS THE RESPONSIBILITY OF THE BUILDING DESIGNER PER ANSI/TPI 1 SEC. 2.

JAMES F. COLLINS, JR. LICENSE No. 52212 STATE OF FLORIDA PROFESSIONAL ENGINEER

Oct 14

TC LL	20.0 PSF	REF R215-- 46926
TC DL	10.0 PSF	DATE 10/16/06
BC DL	10.0 PSF	DRW HCUSR215 06289254
BC LL	0.0 PSF	HC-ENG DAB/AP *
TOT.LD.	40.0 PSF	SEQN- 36071
DUR.FAC.	1.25	FROM CAW
SPACING	24.0"	JREF- 1T1I215_Z07

Top chord 2x6 SP SS
Bot chord 2x6 SP SS
Webs 2x4 SP #2 N

110 mph wind, 15.00 ft mean hgt, ASCE 7-02, CLOSED bldg, not located within 4.50 ft from roof edge, CAT II, EXP B, wind TC DL=5.0 psf, wind BC DL=5.0 psf.

Wind reactions based on MWFRS pressures.

Deflection meets L/240 live and L/180 total load.

Plates sized for a minimum of 3.00 sq.in./piece.

The overall height of this truss excluding overhang is 2-7-15.

SPECIAL LOADS
------(LUMBER DUR.FAC.=1.25 / PLATE DUR.FAC.=1.25)
TC - From 60 PLF at 0.00 to 60 PLF at 17.75
BC - From 20 PLF at 0.00 to 20 PLF at 17.75
TC - 178 LB Conc. Load at 1.69, 3.69, 5.69, 7.69, 9.69 11.69, 13.69, 15.69, 17.69
BC - 78 LB Conc. Load at 1.69, 3.69, 5.69, 7.69, 9.69 11.69, 13.69, 15.69, 17.69

End verticals not exposed to wind pressure.

Truss must be installed as shown with top chord up.

The TC of this truss shall be braced with attached spans at 24" OC in lieu of structural sheathing.

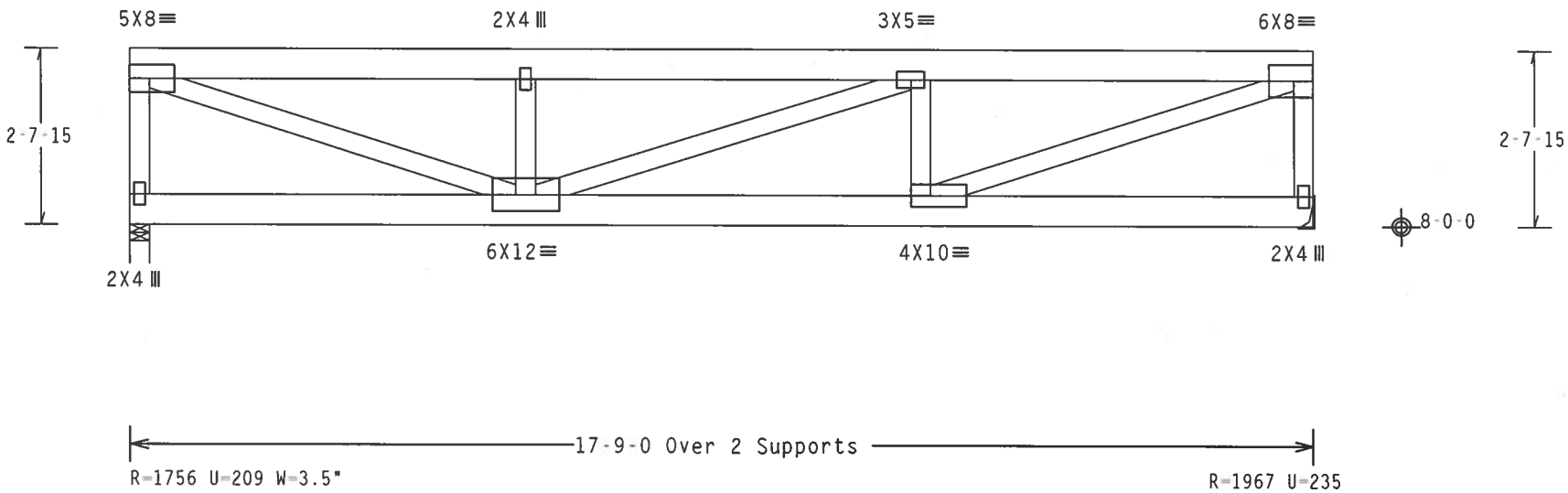

Design Crit: TPI-2002(STD)/FBC

PLT TYP. Wave Cq/RT=1.00(1.25)/10(0) 7.25.0503.00 QTY:1 FL/-/5/-/-/R/- Scale =.375"/Ft.

ALPINE
Alpine Engineered Products, Inc.
1950 Marley Drive
Haines City, FL 33844
FL Certificate of Authorization # 567

WARNING TRUSSES REQUIRE EXTREME CARE IN FABRICATION, HANDLING, SHIPPING, INSTALLING AND BRACING. REFER TO BCSI 1-03 (BUILDING COMPONENT SAFETY INFORMATION), PUBLISHED BY TPI (TRUSS PLATE INSTITUTE, 583 D'ONOFRIO DR., SUITE 200, MADISON, WI 53719) AND WTCA (WOOD TRUSS COUNCIL OF AMERICA, 6300 ENTERPRISE LN, MADISON, WI 53719) FOR SAFETY PRACTICES PRIOR TO PERFORMING THESE FUNCTIONS. UNLESS OTHERWISE INDICATED, TOP CHORD SHALL HAVE PROPERLY ATTACHED STRUCTURAL PANELS AND BOTTOM CHORD SHALL HAVE A PROPERLY ATTACHED RIGID CEILING.

IMPORTANTFURNISH A COPY OF THIS DESIGN TO THE INSTALLATION CONTRACTOR. ALPINE ENGINEERED PRODUCTS, INC. SHALL NOT BE RESPONSIBLE FOR ANY DEVIATION FROM THIS DESIGN; ANY FAILURE TO BUILD THE TRUSS IN CONFORMANCE WITH TPI; OR FABRICATING, HANDLING, SHIPPING, INSTALLING & BRACING OF TRUSSES. DESIGN CONFORMS WITH APPLICABLE PROVISIONS OF NDS (NATIONAL DESIGN SPEC. BY AF&PA) AND TPI. ALPINE CONNECTOR PLATES ARE MADE OF 20/18/16GA (W,H/S/K) ASTM A653 GRADE 40/60 (W, K/H,S) GALV. STEEL. APPLY PLATES TO EACH FACE OF TRUSS AND, UNLESS OTHERWISE LOCATED ON THIS DESIGN, POSITION PER DRAWINGS 160A-Z. ANY INSPECTION OF PLATES FOLLOWED BY (I) SHALL BE PER ANNEX A3 OF TPI1-2002 SEC.3. A SEAL ON THIS DRAWING INDICATES ACCEPTANCE OF PROFESSIONAL ENGINEERING RESPONSIBILITY SOLELY FOR THE TRUSS COMPONENT DESIGN SHOWN. THE SUITABILITY AND USE OF THIS COMPONENT FOR ANY BUILDING IS THE RESPONSIBILITY OF THE BUILDING DESIGNER PER ANSI/TPI 1 SEC. 2.

JAMES F. COLLINS, JR. LICENSE No. 52212 STATE OF FLORIDA PROFESSIONAL ENGINEER
Oct 17 06

TC LL	20.0 PSF	REF	R215-- 46927
TC DL	10.0 PSF	DATE	10/16/06
BC DL	10.0 PSF	DRW	HCUSR215 06289271
BC LL	0.0 PSF	HC-ENG	DAB/AP
TOT.LD.	40.0 PSF	SEQN-	36228
DUR.FAC.	1.25	FROM	CAW
SPACING	24.0"	JREF-	1T1I215_Z07

Top chord 2x4 SP #2 N
Bot chord 2x4 SP #2 N
Webs 2x4 SP #2 N

Wind reactions based on MWFRS pressures.

Deflection meets L/240 live and L/180 total load.

Truss must be installed as shown with top chord up.

The overall height of this truss excluding overhang is 3-3-15.

110 mph wind, 15.00 ft mean hgt, ASCE 7-02, CLOSED bldg, not located within 4.50 ft from roof edge, CAT II, EXP B, wind TC DL=5.0 psf, wind BC DL=5.0 psf.

End verticals not exposed to wind pressure.

Provide for complete drainage of roof.

Plates sized for a minimum of 3.00 sq.in./piece.

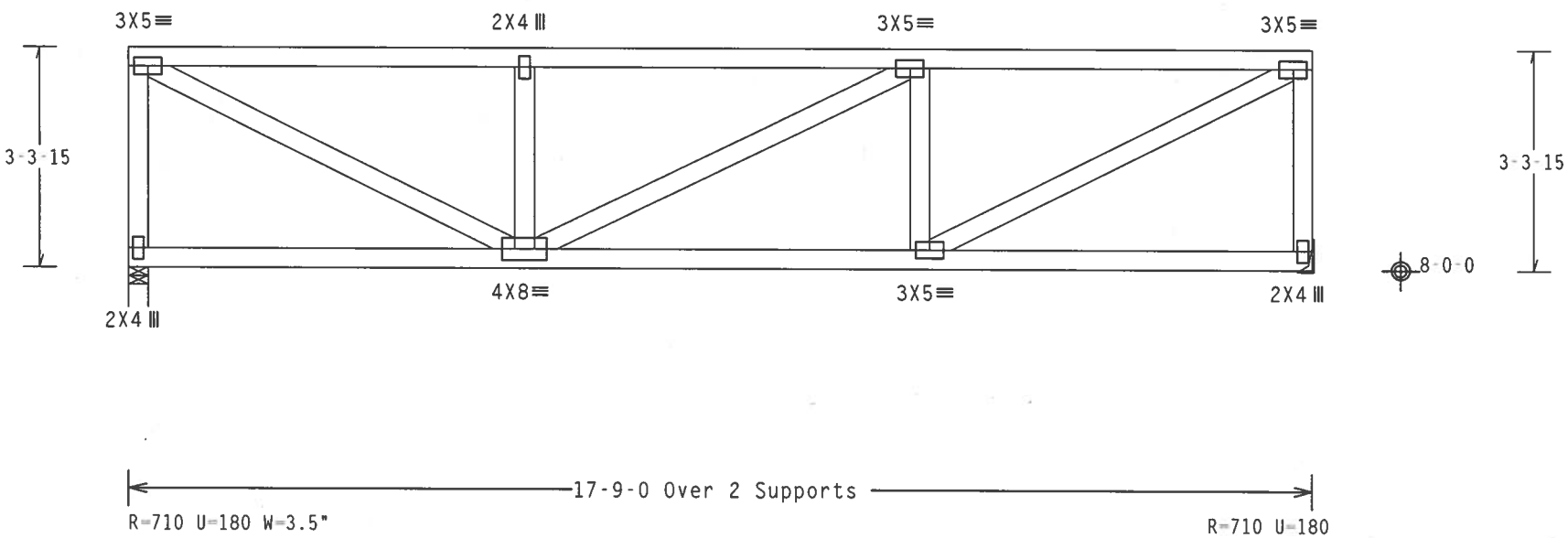

Design Crit: TPI-2002(STD)/FBC

PLT TYP. Wave Cq/RT=1.00(1.25)/10(0) 7.25.0503.00 QTY:1 FL/-/5/-/-/R/- Scale =.375"/Ft.

ALPINE
Alpine Engineered Products, Inc.
1950 Marley Drive
Haines City, FL 33844
FL Certificate of Authorization # 567

WARNING TRUSSES REQUIRE EXTREME CARE IN FABRICATION, HANDLING, SHIPPING, INSTALLING AND BRACING. REFER TO BCSI 1-03 (BUILDING COMPONENT SAFETY INFORMATION), PUBLISHED BY TPI (TRUSS PLATE INSTITUTE, 583 D'ONOFRIO DR., SUITE 200, MADISON, WI 53719) AND WTCA (WOOD TRUSS COUNCIL OF AMERICA, 6300 ENTERPRISE LN, MADISON, WI 53719) FOR SAFETY PRACTICES PRIOR TO PERFORMING THESE FUNCTIONS. UNLESS OTHERWISE INDICATED, TOP CHORD SHALL HAVE PROPERLY ATTACHED STRUCTURAL PANELS AND BOTTOM CHORD SHALL HAVE A PROPERLY ATTACHED RIGID CEILING.

IMPORTANTFURNISH A COPY OF THIS DESIGN TO THE INSTALLATION CONTRACTOR. ALPINE ENGINEERED PRODUCTS, INC. SHALL NOT BE RESPONSIBLE FOR ANY DEVIATION FROM THIS DESIGN; ANY FAILURE TO BUILD THE TRUSS IN CONFORMANCE WITH TPI; OR FABRICATING, HANDLING, SHIPPING, INSTALLING & BRACING OF TRUSSES. DESIGN CONFORMS WITH APPLICABLE PROVISIONS OF NDS (NATIONAL DESIGN SPEC. BY AF&PA) AND TPI. ALPINE CONNECTOR PLATES ARE MADE OF 20/18/16GA (W,H/S/K) ASTM A653 GRADE 40/60 (W, K/H,S) GALV. STEEL. APPLY PLATES TO EACH FACE OF TRUSS AND, UNLESS OTHERWISE LOCATED ON THIS DESIGN, POSITION PER DRAWINGS 160A-Z. ANY INSPECTION OF PLATES FOLLOWED BY (1) SHALL BE PER ANNEX A3 OF TPI1-2002 SEC.3. A SEAL ON THIS DRAWING INDICATES ACCEPTANCE OF PROFESSIONAL ENGINEERING RESPONSIBILITY SOLELY FOR THE TRUSS COMPONENT DESIGN SHOWN. THE SUITABILITY AND USE OF THIS COMPONENT FOR ANY BUILDING IS THE RESPONSIBILITY OF THE BUILDING DESIGNER PER ANSI/TPI 1 SEC. 2.

JAMES E. COLLINS JR. LICENSE No.52212 STATE OF FLORIDA PROFESSIONAL ENGINEER

Oct

TC LL	20.0 PSF	REF	R215-- 46928
TC DL	10.0 PSF	DATE	10/16/06
BC DL	10.0 PSF	DRW	HCUSR215 06289272
BC LL	0.0 PSF	HC-ENG	DAB/AP
TOT.LD.	40.0 PSF	SEQN-	36128
DUR.FAC.	1.25	FROM	CAW
SPACING	24.0"	JREF-	1T1I215_Z07

THIS DWG PREPARED FROM COMPUTER INPUT (LOADS & DIMENSIONS) SUBMITTED BY TRUSS MFR.

Top chord 2x4 SP #2 N
Bot chord 2x4 SP SS
Webs 2x4 SP #2 N

110 mph wind, 15.00 ft mean hgt, ASCE 7-02, CLOSED bldg, not located within 4.50 ft from roof edge, CAT II, EXP B, wind TC DL=5.0 psf, wind BC DL=5.0 psf.

Calculated horizontal deflection is 0.14" due to live load and 0.14" due to dead load.

In lieu of structural panels use purlins to brace all flat TC @ 24" OC.

Plates sized for a minimum of 3.00 sq.in./piece.

SPECIAL LOADS
------(LUMBER DUR.FAC.=1.25 / PLATE DUR.FAC.=1.25)
TC - From 61 PLF at 0.00 to 61 PLF at 17.75
BC - From 20 PLF at 0.00 to 20 PLF at 17.75

Wind reactions based on MWFRS pressures.

End verticals not exposed to wind pressure.

Max JT VERT DEFL: LL: 0.24" DL: 0.25" recommended camber 3/8"

Deflection meets L/240 live and L/180 total load.

The overall height of this truss excluding overhang is 3-11-15.

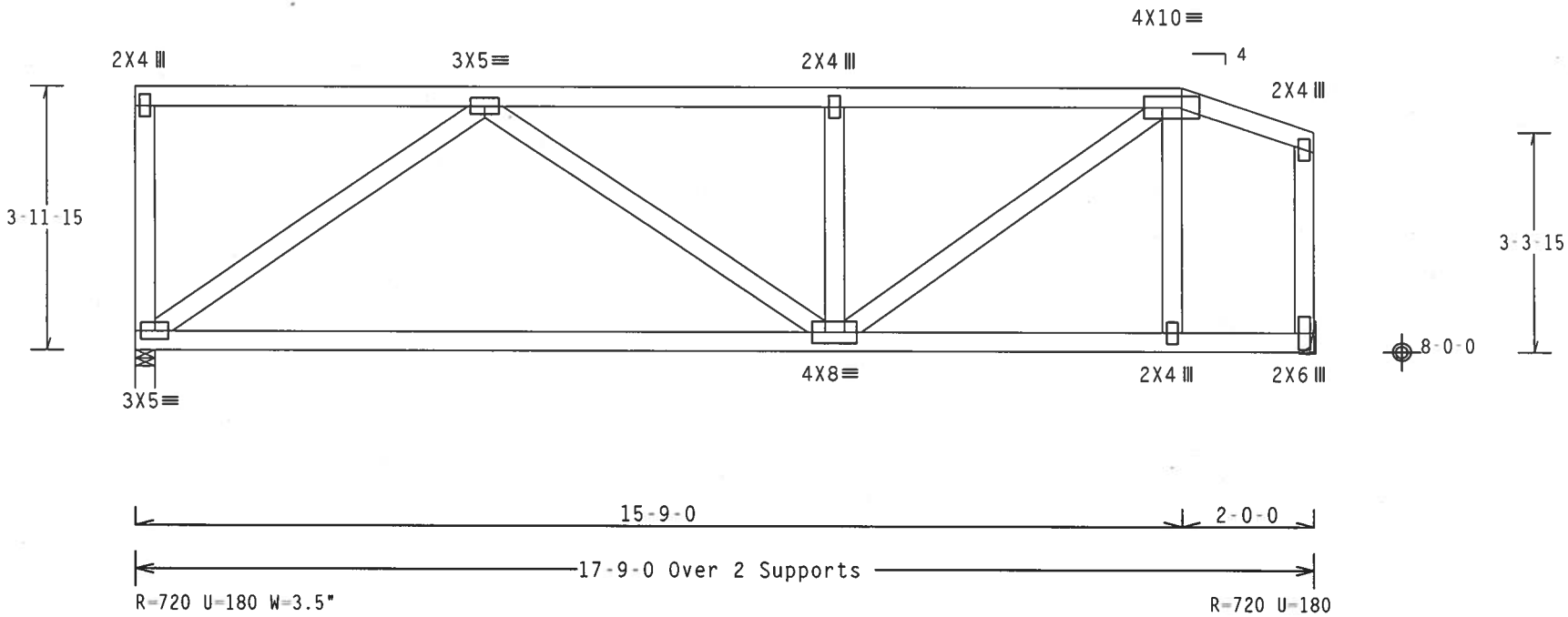

Design Crit: TPI-2002(STD)/FBC

PLT TYP. Wave Cq/RT=1.00(1.25)/10(0) 7.25.0503.00 QTY:1 FL/-/5/-/-/R/- Scale =.375"/Ft.

ALPINE
Alpine Engineered Products, Inc.
1950 Marley Drive
Haines City, FL 33844
FL Certificate of Authorization # 567

WARNING TRUSSES REQUIRE EXTREME CARE IN FABRICATION, HANDLING, SHIPPING, INSTALLING AND BRACING. REFER TO BCSI 1-03 (BUILDING COMPONENT SAFETY INFORMATION), PUBLISHED BY TPI (TRUSS PLATE INSTITUTE, 583 D'ONOFRIO DR., SUITE 200, MADISON, WI 53719) AND WTCA (WOOD TRUSS COUNCIL OF AMERICA, 6300 ENTERPRISE LN, MADISON, WI 53719) FOR SAFETY PRACTICES PRIOR TO PERFORMING THESE FUNCTIONS. UNLESS OTHERWISE INDICATED, TOP CHORD SHALL HAVE PROPERLY ATTACHED STRUCTURAL PANELS AND BOTTOM CHORD SHALL HAVE A PROPERLY ATTACHED RIGID CEILING.

IMPORTANTFURNISH A COPY OF THIS DESIGN TO THE INSTALLATION CONTRACTOR. ALPINE ENGINEERED PRODUCTS, INC. SHALL NOT BE RESPONSIBLE FOR ANY DEVIATION FROM THIS DESIGN; ANY FAILURE TO BUILD THE TRUSS IN CONFORMANCE WITH TPI; OR FABRICATING, HANDLING, SHIPPING, INSTALLING & BRACING OF TRUSSES. DESIGN CONFORMS WITH APPLICABLE PROVISIONS OF NDS (NATIONAL DESIGN SPEC. BY AF&PA) AND TPI. ALPINE CONNECTOR PLATES ARE MADE OF 20/18/16GA (W,H/S/K) ASTM A653 GRADE 40/60 (W, K/H,S) GALV. STEEL. APPLY PLATES TO EACH FACE OF TRUSS AND, UNLESS OTHERWISE LOCATED ON THIS DESIGN, POSITION PER DRAWINGS 160A-Z. ANY INSPECTION OF PLATES FOLLOWED BY (I) SHALL BE PER ANNEX A3 OF TPI1-2002 SEC.3. A SEAL ON THIS DRAWING INDICATES ACCEPTANCE OF PROFESSIONAL ENGINEERING RESPONSIBILITY SOLELY FOR THE TRUSS COMPONENT DESIGN SHOWN. THE SUITABILITY AND USE OF THIS COMPONENT FOR ANY BUILDING IS THE RESPONSIBILITY OF THE BUILDING DESIGNER PER ANSI/TPI 1 SEC. 2.

JAMES R. COLLINS, JR. LICENSE No. 52212 STATE OF FLORIDA PROFESSIONAL ENGINEER
Oct 17 06

TC LL	20.0 PSF	REF R215-- 46929
TC DL	10.0 PSF	DATE 10/16/06
BC DL	10.0 PSF	DRW HCUSR215 06289273
BC LL	0.0 PSF	HC-ENG DAB/AP
TOT.LD.	40.0 PSF	SEQN- 36126
DUR.FAC.	1.25	FROM CAW
SPACING	24.0"	JREF- 1T1I215_Z07

Top chord 2x4 SP #2 N
Bot chord 2x4 SP #2 N
Webs 2x4 SP #2 N

Wind reactions based on MWFRS pressures.

In lieu of structural panels use purlins to brace all flat TC @ 24" OC.

Plates sized for a minimum of 3.00 sq.in./piece.

110 mph wind, 15.00 ft mean hgt, ASCE 7-02, CLOSED bldg, not located within 4.50 ft from roof edge, CAT II, EXP B, wind TC DL=5.0 psf, wind BC DL=5.0 psf.

End verticals not exposed to wind pressure.

Deflection meets L/240 live and L/180 total load.

The overall height of this truss excluding overhang is 4-7-15.

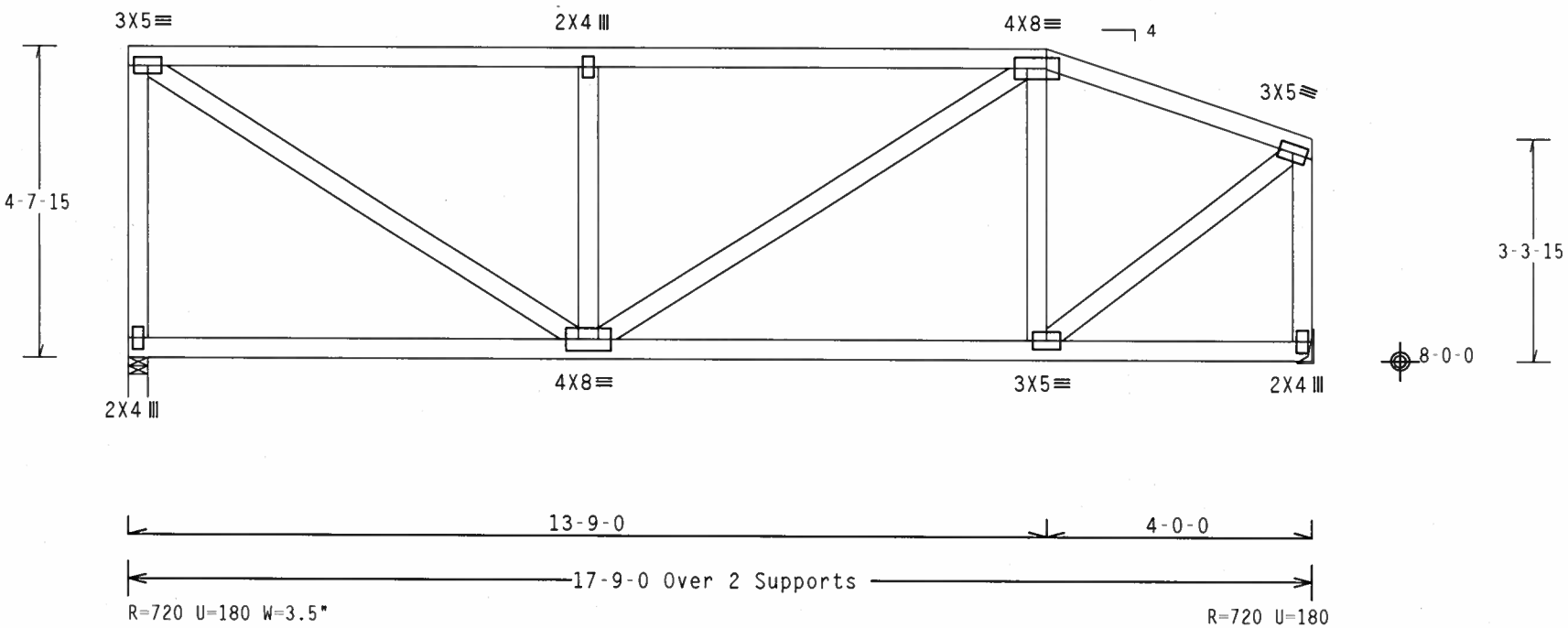

Design Crit: TPI-2002(STD)/FBC
Cq/RT=1.00(1.25)/10(0) 7.25.0503

PLT TYP. Wave

QTY:1 FL/-/5/-/-/R/-

Scale =.375"/Ft.

ALPINE
Alpine Engineered Products, Inc.
1950 Marley Drive
Haines City, FL 33844
FL Certificate of Authorization # 567

WARNING TRUSSES REQUIRE EXTREME CARE IN FABRICATION, HANDLING, SHIPPING, INSTALLING AND BRACING. REFER TO BCSI 1-03 (BUILDING COMPONENT SAFETY INFORMATION), PUBLISHED BY TPI (TRUSS PLATE INSTITUTE, 583 D'ONOFRIO DR., SUITE 200, MADISON, WI 53719) AND WTCA (WOOD TRUSS COUNCIL OF AMERICA, 6300 ENTERPRISE LN, MADISON, WI 53719) FOR SAFETY PRACTICES PRIOR TO PERFORMING THESE FUNCTIONS. UNLESS OTHERWISE INDICATED, TOP CHORD SHALL HAVE PROPERLY ATTACHED STRUCTURAL PANELS AND BOTTOM CHORD SHALL HAVE A PROPERLY ATTACHED RIGID CEILING.

IMPORTANTFURNISH A COPY OF THIS DESIGN TO THE INSTALLATION CONTRACTOR. ALPINE ENGINEERED PRODUCTS, INC. SHALL NOT BE RESPONSIBLE FOR ANY DEVIATION FROM THIS DESIGN; ANY FAILURE TO BUILD THE TRUSS IN CONFORMANCE WITH TPI: OR FABRICATING, HANDLING, SHIPPING, INSTALLING & BRACING OF TRUSSES. DESIGN CONFORMS WITH APPLICABLE PROVISIONS OF NDS (NATIONAL DESIGN SPEC. BY AF&PA) AND TPI. ALPINE CONNECTOR PLATES ARE MADE OF 20/18/16GA (W,H/S/K) ASTM A653 GRADE 40/60 (W, K/H,S) GALV. STEEL. APPLY PLATES TO EACH FACE OF TRUSS AND, UNLESS OTHERWISE LOCATED ON THIS DESIGN, POSITION PER DRAWINGS 160A Z. ANY INSPECTION OF PLATES FOLLOWED BY (1) SHALL BE PER ANNEX A3 OF TPI1 2002 SEC.3. A SEAL ON THIS DRAWING INDICATES ACCEPTANCE OF PROFESSIONAL ENGINEERING RESPONSIBILITY SOLELY FOR THE TRUSS COMPONENT DESIGN SHOWN. THE SUITABILITY AND USE OF THIS COMPONENT FOR ANY BUILDING IS THE RESPONSIBILITY OF THE BUILDING DESIGNER PER ANSI/TPI 1 SEC. 2.

JAMES F. COLLINS, JR. LICENSED No. 52212 STATE OF FLORIDA PROFESSIONAL ENGINEER

Oct 17 06

TC LL	20.0 PSF	REF	R215-- 46930
TC DL	10.0 PSF	DATE	10/16/06
BC DL	10.0 PSF	DRW	HCUSR215 06289274
BC LL	0.0 PSF	HC-ENG	DAB/AP
TOT.LD.	40.0 PSF	SEQN-	36124
DUR.FAC.	1.25	FROM	CAW
SPACING	24.0"	JREF-	1T1I215_Z07

Top chord 2x4 SP #2 N
Bot chord 2x4 SP #2 N
Webs 2x4 SP #2 N

Wind reactions based on MWFRS pressures.

In lieu of structural panels use purlins to brace all flat TC @ 24" OC.

Plates sized for a minimum of 3.00 sq.in./piece.

110 mph wind, 15.00 ft mean hgt, ASCE 7-02, CLOSED bldg, not located within 4.50 ft from roof edge, CAT II, EXP B, wind TC DL=5.0 psf, wind BC DL=5.0 psf.

End verticals not exposed to wind pressure.

Deflection meets L/240 live and L/180 total load.

The overall height of this truss excluding overhang is 5-3-15.

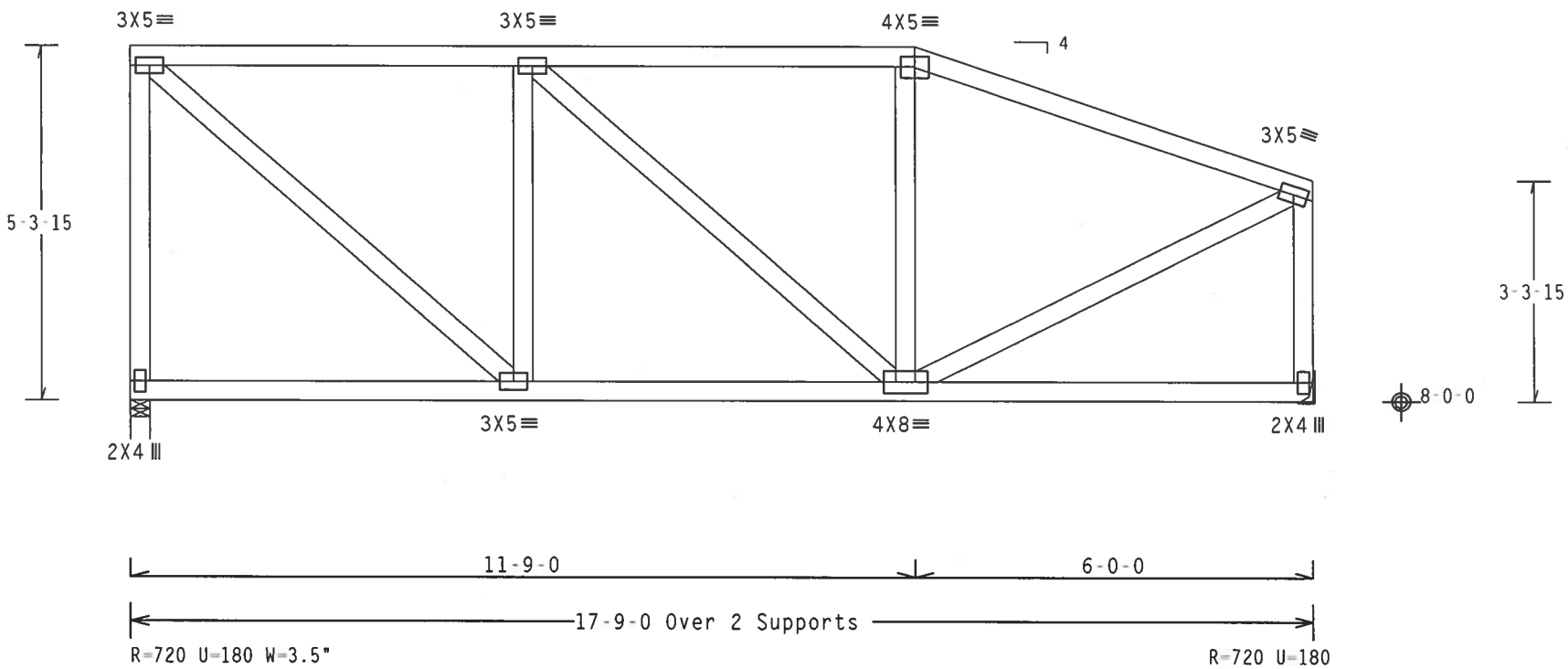

Design Crit: TPI-2002(STD)/FBC

PLT TYP. Wave Cq/RT=1.00(1.25)/10(0) 7.25.0503.00 QTY:1 FL/-/5/-/-/R/- Scale =.375"/Ft.

ALPINE
Alpine Engineered Products, Inc.
1950 Marley Drive
Haines City, FL 33844
FL Certificate of Authorization # 567

WARNING TRUSSES REQUIRE EXTREME CARE IN FABRICATION, HANDLING, SHIPPING, INSTALLING AND BRACING. REFER TO BCSI 1-03 (BUILDING COMPONENT SAFETY INFORMATION), PUBLISHED BY TPI (TRUSS PLATE INSTITUTE, 583 D'ONOFRIO DR., SUITE 200, MADISON, WI 53719) AND WTCA (WOOD TRUSS COUNCIL OF AMERICA, 6300 ENTERPRISE LN, MADISON, WI 53719) FOR SAFETY PRACTICES PRIOR TO PERFORMING THESE FUNCTIONS. UNLESS OTHERWISE INDICATED, TOP CHORD SHALL HAVE PROPERLY ATTACHED STRUCTURAL PANELS AND BOTTOM CHORD SHALL HAVE A PROPERLY ATTACHED RIGID CEILING.

IMPORTANTFURNISH A COPY OF THIS DESIGN TO THE INSTALLATION CONTRACTOR. ALPINE ENGINEERED PRODUCTS, INC. SHALL NOT BE RESPONSIBLE FOR ANY DEVIATION FROM THIS DESIGN; ANY FAILURE TO BUILD THE TRUSS IN CONFORMANCE WITH TPI; OR FABRICATING, HANDLING, SHIPPING, INSTALLING & BRACING OF TRUSSES. DESIGN CONFORMS WITH APPLICABLE PROVISIONS OF NDS (NATIONAL DESIGN SPEC. BY AF&PA) AND TPI. ALPINE CONNECTOR PLATES ARE MADE OF 20/18/16GA (W.H/S/K) ASTM A653 GRADE 40/60 (W. K/H.S) GALV. STEEL. APPLY PLATES TO EACH FACE OF TRUSS AND, UNLESS OTHERWISE LOCATED ON THIS DESIGN, POSITION PER DRAWINGS 160A-Z. ANY INSPECTION OF PLATES FOLLOWED BY (i) SHALL BE PER ANNEX A3 OF TPI1-2002 SEC.3. A SEAL ON THIS DRAWING INDICATES ACCEPTANCE OF PROFESSIONAL ENGINEERING RESPONSIBILITY SOLELY FOR THE TRUSS COMPONENT DESIGN SHOWN. THE SUITABILITY AND USE OF THIS COMPONENT FOR ANY BUILDING IS THE RESPONSIBILITY OF THE BUILDING DESIGNER PER ANSI/TPI 1 SEC. 2.

JAMES F. COLLINS, JR. LICENSE No. 52212 STATE OF FLORIDA PROFESSIONAL ENGINEER
Oct 17, 2006

TC LL	20.0	PSF
TC DL	10.0	PSF
BC DL	10.0	PSF
BC LL	0.0	PSF
TOT.LD.	40.0	PSF
DUR.FAC.	1.25	
SPACING	24.0"	

REF	R215-- 46931
DATE	10/16/06
DRW	HCUSR215 06289275
HC-ENG	DAB/AP
SEQN-	36122
FROM	CAW
JREF-	1T1I215_Z07

Top chord 2x4 SP #2 N
Bot chord 2x4 SP #2 N
Webs 2x4 SP #2 N

Wind reactions based on MWFRS pressures.

In lieu of structural panels use purlins to brace all flat TC @ 24" OC.

Plates sized for a minimum of 3.00 sq.in./piece.

110 mph wind, 15.00 ft mean hgt, ASCE 7-02, CLOSED bldg, not located within 4.50 ft from roof edge, CAT II, EXP B, wind TC DL=5.0 psf, wind BC DL=5.0 psf.

End verticals not exposed to wind pressure.

Deflection meets L/240 live and L/180 total load.

The overall height of this truss excluding overhang is 5-11-15.

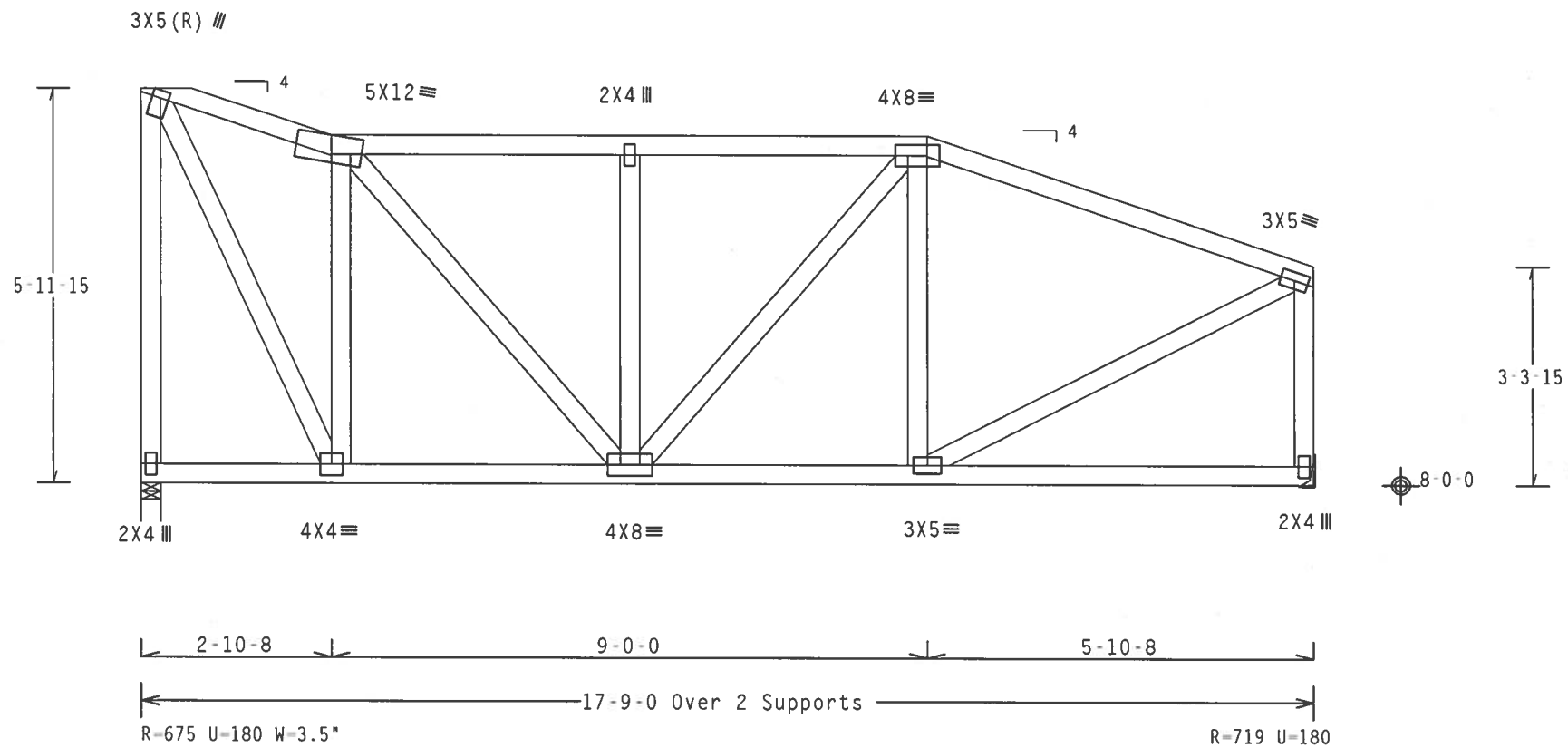

Design Crit: TPI-2002(STD)/FBC

PLT TYP. Wave

Cq/RT=1.00(1.25)/10(0) 7.25.0503.00 QTY:1 FL/-/5/-/-/R/- Scale =.375"/Ft.

ALPINE

Alpine Engineered Products, Inc.
1950 Marley Drive
Haines City, FL 33844
FL Certificate of Authorization # 567

WARNING TRUSSES REQUIRE EXTREME CARE IN FABRICATION, HANDLING, SHIPPING, INSTALLING AND BRACING. REFER TO BCSI 1-03 (BUILDING COMPONENT SAFETY INFORMATION), PUBLISHED BY TPI (TRUSS PLATE INSTITUTE, 583 D'ONOFRIO DR., SUITE 200, MADISON, WI 53719) AND WTCA (WOOD TRUSS COUNCIL OF AMERICA, 6300 ENTERPRISE LN, MADISON, WI 53719) FOR SAFETY PRACTICES PRIOR TO PERFORMING THESE FUNCTIONS. UNLESS OTHERWISE INDICATED, TOP CHORD SHALL HAVE PROPERLY ATTACHED STRUCTURAL PANELS AND BOTTOM CHORD SHALL HAVE A PROPERLY ATTACHED RIGID CEILING.

IMPORTANTFURNISH A COPY OF THIS DESIGN TO THE INSTALLATION CONTRACTOR. ALPINE ENGINEERED PRODUCTS, INC. SHALL NOT BE RESPONSIBLE FOR ANY DEVIATION FROM THIS DESIGN; ANY FAILURE TO BUILD THE TRUSS IN CONFORMANCE WITH TPI; OR FABRICATING, HANDLING, SHIPPING, INSTALLING & BRACING OF TRUSSES. DESIGN CONFORMS WITH APPLICABLE PROVISIONS OF NDS (NATIONAL DESIGN SPEC. BY AF&PA) AND TPI. ALPINE CONNECTOR PLATES ARE MADE OF 20/18/16GA (W,H/S/K) ASTM A653 GRADE 40/60 (W, K/H,S) GALV. STEEL. APPLY PLATES TO EACH FACE OF TRUSS AND, UNLESS OTHERWISE LOCATED ON THIS DESIGN, POSITION PER DRAWINGS 160A-Z. ANY INSPECTION OF PLATES FOLLOWED BY (1) SHALL BE PER ANNEX A3 OF TPI1-2002 SEC.3. A SEAL ON THIS DRAWING INDICATES ACCEPTANCE OF PROFESSIONAL ENGINEERING RESPONSIBILITY SOLELY FOR THE TRUSS COMPONENT DESIGN SHOWN. THE SUITABILITY AND USE OF THIS COMPONENT FOR ANY BUILDING IS THE RESPONSIBILITY OF THE BUILDING DESIGNER PER ANSI/TPI 1 SEC. 2.

JAMES F. COLLINS, JR. LICENSED No 52212 STATE OF FLORIDA PROFESSIONAL ENGINEER

Oct

TC LL	20.0 PSF	REF R215-- 46932
TC DL	10.0 PSF	DATE 10/16/06
BC DL	10.0 PSF	DRW HCUSR215 06289276
BC LL	0.0 PSF	HC-ENG DAB/AP
TOT.LD.	40.0 PSF	SEQN- 36120
DUR.FAC.	1.25	FROM CAW
SPACING	24.0"	JREF- 1T1I215_Z07

THIS DWG PREPARED FROM COMPUTER INPUT (LOADS & DIMENSIONS) SUBMITTED BY TRUSS MFR.

Top chord 2x4 SP #2 N
Bot chord 2x4 SP #2 N
Webs 2x4 SP #2 N

Wind reactions based on MWFRS pressures.

In lieu of structural panels use purlins to brace all flat TC @ 24" OC.

Plates sized for a minimum of 3.00 sq.in./piece.

110 mph wind, 15.00 ft mean hgt, ASCE 7-02, CLOSED bldg, not located within 4.50 ft from roof edge, CAT II, EXP B, wind TC DL=5.0 psf, wind BC DL=5.0 psf.

End verticals not exposed to wind pressure.

Deflection meets L/240 live and L/180 total load.

The overall height of this truss excluding overhang is 6-2-15.

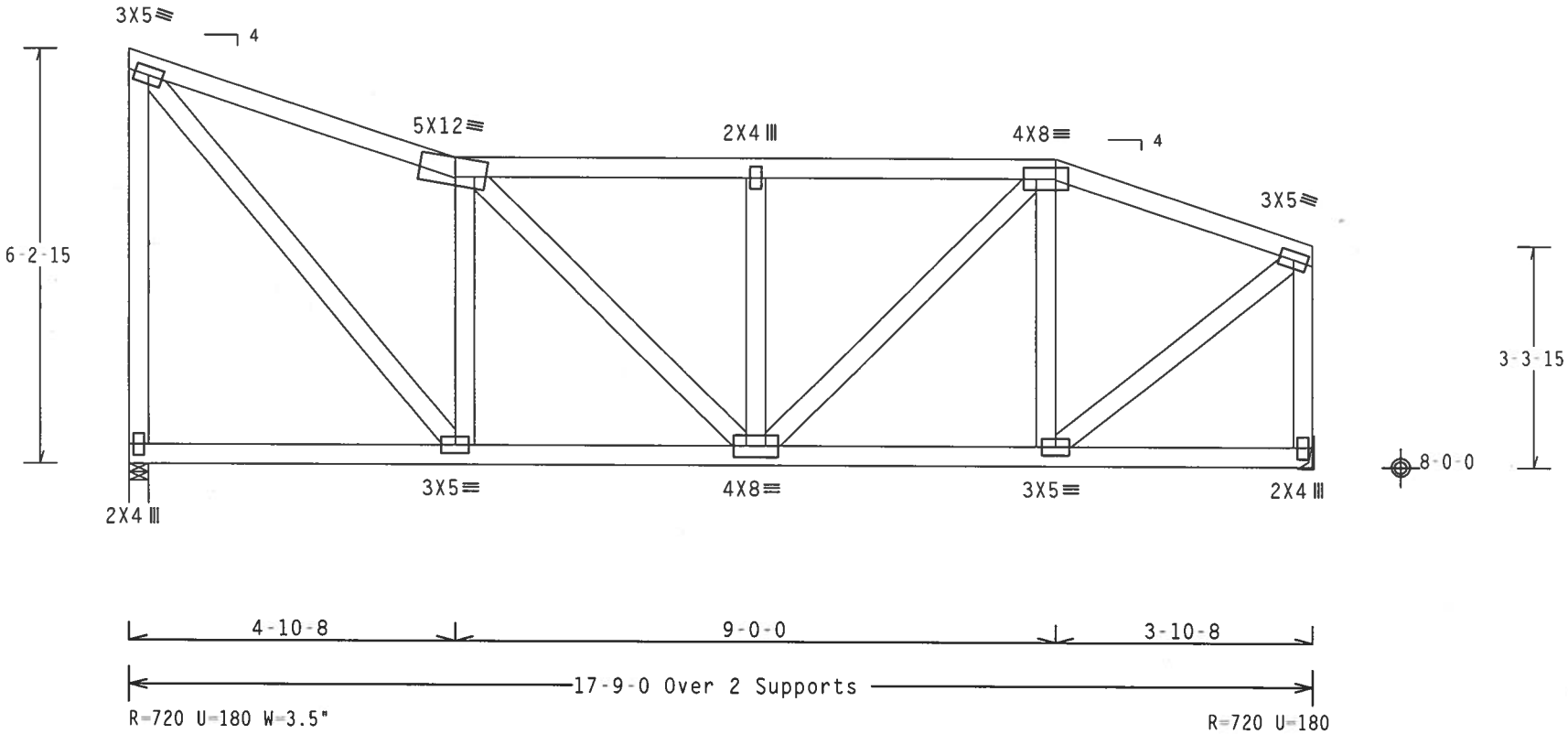

Design Crit: TPI-2002(STD)/FBC

PLT TYP. Wave

Cq/RT=1.00(1.25)/10(0) 7.25.0503.00 QTY:1 FL/-/5/-/-/R/- Scale =.375"/Ft.

ALPINE

Alpine Engineered Products, Inc.
1950 Marley Drive
Haines City, FL 33844
FL Certificate of Authorization # 567

WARNING TRUSSES REQUIRE EXTREME CARE IN FABRICATION, HANDLING, SHIPPING, INSTALLING AND BRACING. REFER TO BCSI 1-03 (BUILDING COMPONENT SAFETY INFORMATION), PUBLISHED BY TPI (TRUSS PLATE INSTITUTE, 583 D'ONOFRIO DR., SUITE 200, MADISON, WI 53719) AND WTCA (WOOD TRUSS COUNCIL OF AMERICA, 6300 ENTERPRISE LN, MADISON, WI 53719) FOR SAFETY PRACTICES PRIOR TO PERFORMING THESE FUNCTIONS. UNLESS OTHERWISE INDICATED, TOP CHORD SHALL HAVE PROPERLY ATTACHED STRUCTURAL PANELS AND BOTTOM CHORD SHALL HAVE A PROPERLY ATTACHED RIGID CEILING.

IMPORTANTFURNISH A COPY OF THIS DESIGN TO THE INSTALLATION CONTRACTOR. ALPINE ENGINEERED PRODUCTS, INC. SHALL NOT BE RESPONSIBLE FOR ANY DEVIATION FROM THIS DESIGN; ANY FAILURE TO BUILD THE TRUSS IN CONFORMANCE WITH TPI; OR FABRICATING, HANDLING, SHIPPING, INSTALLING & BRACING OF TRUSSES. DESIGN CONFORMS WITH APPLICABLE PROVISIONS OF NDS (NATIONAL DESIGN SPEC. BY AF&PA) AND TPI. ALPINE CONNECTOR PLATES ARE MADE OF 20/18/16GA (W,H/S/K) ASTM A653 GRADE 40/60 (W, K/H,S) GALV. STEEL. APPLY PLATES TO EACH FACE OF TRUSS AND, UNLESS OTHERWISE LOCATED ON THIS DESIGN, POSITION PER DRAWINGS 160A-Z. ANY INSPECTION OF PLATES FOLLOWED BY (1) SHALL BE PER ANNEX A3 OF TPI1-2002 SEC.3. A SEAL ON THIS DRAWING INDICATES ACCEPTANCE OF PROFESSIONAL ENGINEERING RESPONSIBILITY SOLELY FOR THE TRUSS COMPONENT DESIGN SHOWN. THE SUITABILITY AND USE OF THIS COMPONENT FOR ANY BUILDING IS THE RESPONSIBILITY OF THE BUILDING DESIGNER PER ANSI/TPI 1 SEC. 2.

JAMES F. COLLINS, JR. LICENSE No. 52272 STATE OF FLORIDA PROFESSIONAL ENGINEER

Oct 16, 2006

TC LL	20.0 PSF	REF	R215-- 46933
TC DL	10.0 PSF	DATE	10/16/06
BC DL	10.0 PSF	DRW	HCUSR215 06289277
BC LL	0.0 PSF	HC-ENG	DAB/AP
TOT.LD.	40.0 PSF	SEQN-	36118
DUR.FAC.	1.25	FROM	CAW
SPACING	24.0"	JREF-	1T1I215_Z07

THIS DWG PREPARED FROM COMPUTER INPUT (LOADS & DIMENSIONS) SUBMITTED BY TRUSS MFR.

Top chord 2x6 SP #2 N :T2 2x6 SP #2 Dense:
Bot chord 2x6 SP SS
Webs 2x4 SP #2 N

SPECIAL LOADS
------(LUMBER DUR.FAC.=1.25 / PLATE DUR.FAC.=1.25)
TC - From 61 PLF at 0.39 to 61 PLF at 12.28
BC - From 20 PLF at 0.00 to 20 PLF at 12.67
TC - 245 LB Conc. Load at 3.75, 8.92
TC - 76 LB Conc. Load at 5.81, 6.85
BC - 918 LB Conc. Load at 1.60
BC - 884 LB Conc. Load at 3.60
BC - 82 LB Conc. Load at 3.75, 8.92
BC - 2283 LB Conc. Load at 5.54
BC - 28 LB Conc. Load at 5.81, 6.85

Deflection meets L/240 live and L/180 total load.

Plates sized for a minimum of 3.00 sq.in./piece.

2 COMPLETE TRUSSES REQUIRED

Nailing Schedule: (0.131"x3"_Gun_nails)
Top Chord: 1 Row @12.00" o.c.
Bot Chord: 1 Row @ 4.50" o.c.
Webs : 1 Row @ 4" o.c.
Use equal spacing between rows and stagger nails in each row to avoid splitting.

110 mph wind, 15.00 ft mean hgt, ASCE 7-02, CLOSED bldg, not located within 4.50 ft from roof edge, CAT II, EXP B, wind TC DL=5.0 psf, wind BC DL=5.0 psf.

Wind reactions based on MWFRS pressures.

In lieu of structural panels use purlins to brace all flat TC @ 24" OC.

The overall height of this truss excluding overhang is 1-6-15.

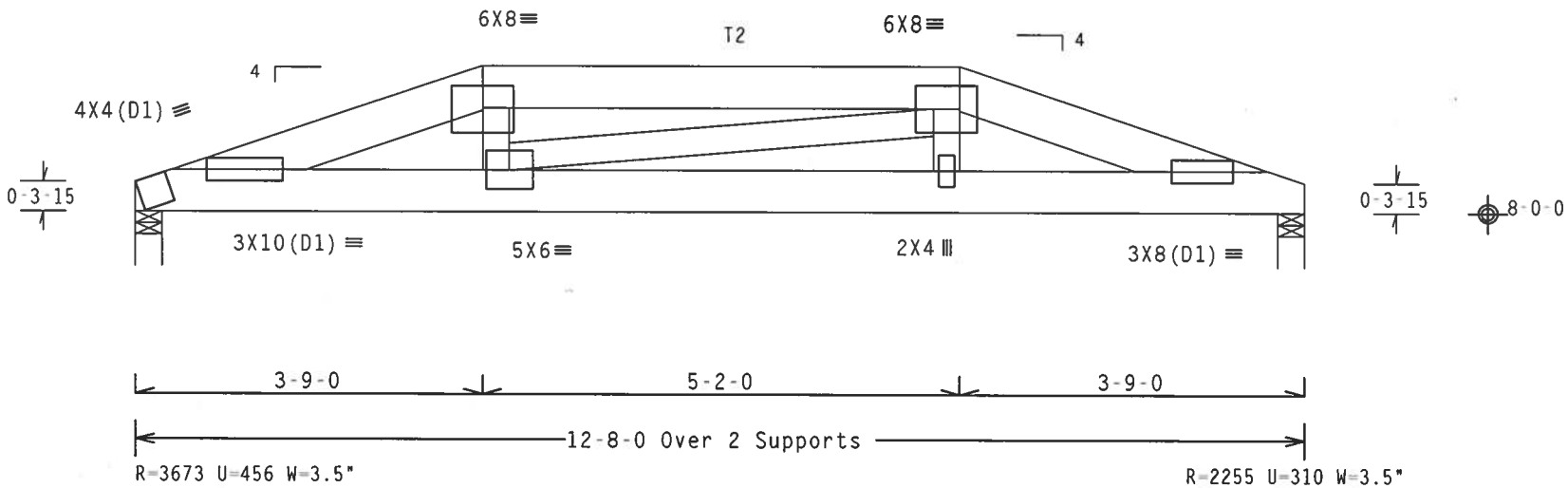

Design Crit: TPI-2002(STD)/FBC

PLT TYP. Wave Cq/RT=1.00(1.25)/10(0) 7.25.0503.00 QTY:1 FL/-/5/-/-/R/- Scale =.5"/Ft.

ALPINE
Alpine Engineered Products, Inc.
1950 Marley Drive
Haines City, FL 33844
FL Certificate of Authorization # 567

WARNING TRUSSES REQUIRE EXTREME CARE IN FABRICATION, HANDLING, SHIPPING, INSTALLING AND BRACING. REFER TO BCSI 1-03 (BUILDING COMPONENT SAFETY INFORMATION), PUBLISHED BY TPI (TRUSS PLATE INSTITUTE, 583 D'ONOFRIO DR., SUITE 200, MADISON, WI 53719) AND WTCA (WOOD TRUSS COUNCIL OF AMERICA, 6300 ENTERPRISE LN. MADISON, WI 53719) FOR SAFETY PRACTICES PRIOR TO PERFORMING THESE FUNCTIONS. UNLESS OTHERWISE INDICATED, TOP CHORD SHALL HAVE PROPERLY ATTACHED STRUCTURAL PANELS AND BOTTOM CHORD SHALL HAVE A PROPERLY ATTACHED RIGID CEILING.

IMPORTANTFURNISH A COPY OF THIS DESIGN TO THE INSTALLATION CONTRACTOR. ALPINE ENGINEERED PRODUCTS, INC. SHALL NOT BE RESPONSIBLE FOR ANY DEVIATION FROM THIS DESIGN; ANY FAILURE TO BUILD THE TRUSS IN CONFORMANCE WITH TPI; OR FABRICATING, HANDLING, SHIPPING, INSTALLING & BRACING OF TRUSSES. DESIGN CONFORMS WITH APPLICABLE PROVISIONS OF NDS (NATIONAL DESIGN SPEC. BY AF&PA) AND TPI. ALPINE CONNECTOR PLATES ARE MADE OF 20/18/16GA (W.H/S/K) ASTM A653 GRADE 40/60 (W. K/H.S) GALV. STEEL. APPLY PLATES TO EACH FACE OF TRUSS AND, UNLESS OTHERWISE LOCATED ON THIS DESIGN, POSITION PER DRAWINGS 160A-Z. ANY INSPECTION OF PLATES FOLLOWED BY (I) SHALL BE PER ANNEX A3 OF TPI1-2002 SEC.3. A SEAL ON THIS DRAWING INDICATES ACCEPTANCE OF PROFESSIONAL ENGINEERING RESPONSIBILITY SOLELY FOR THE TRUSS COMPONENT DESIGN SHOWN. THE SUITABILITY AND USE OF THIS COMPONENT FOR ANY BUILDING IS THE RESPONSIBILITY OF THE BUILDING DESIGNER PER ANSI/TPI 1 SEC. 2.

JAMES F. COLLINS, JR. LICENSED No. 52272 STATE OF FLORIDA PROFESSIONAL ENGINEER

TC LL	20.0 PSF	REF R215-- 46934
TC DL	10.0 PSF	DATE 10/16/06
BC DL	10.0 PSF	DRW HCUSR215 06289315
BC LL	0.0 PSF	HC-ENG DAB/AP
TOT.LD.	40.0 PSF	SEQN- 29414
DUR.FAC.	1.25	FROM CAW
SPACING	24.0"	JREF- 1T1I215_Z07

THIS DWG PREPARED FROM COMPUTER INPUT (LOADS & DIMENSIONS) SUBMITTED BY TRUSS MFR.

Top chord 2x4 SP #2 N :T2 2x6 SP #2 N:
Bot chord 2x6 SP SS
Webs 2x4 SP #2 N

SPECIAL LOADS
------(LUMBER DUR.FAC.=1.25 / PLATE DUR.FAC.=1.25)
TC - From 61 PLF at 0.00 to 61 PLF at 34.00
BC - From 20 PLF at 0.00 to 20 PLF at 32.00
BC - 1449 LB Conc. Load at 6.94, 8.94
BC - 1461 LB Conc. Load at 10.94
BC - 720 LB Conc. Load at 13.00, 15.00, 17.00, 19.00, 21.00
BC - 710 LB Conc. Load at 23.00
BC - 1967 LB Conc. Load at 25.00

110 mph wind, 15.00 ft mean hgt, ASCE 7-02, CLOSED bldg, not located within 4.50 ft from roof edge, CAT II, EXP B, wind TC DL=5.0 psf, wind BC DL=5.0 psf.

In lieu of structural panels use purlins to brace all flat TC @ 24" OC.

Deflection meets L/240 live and L/180 total load.

The overall height of this truss excluding overhang is 3-2-15.

2 COMPLETE TRUSSES REQUIRED

Nailing Schedule: (0.131"x3"_Gun_nails)
Top Chord: 1 Row @12.00" o.c.
Bot Chord: 1 Row @ 4.75" o.c.
Webs : 1 Row @ 4" o.c.
Use equal spacing between rows and stagger nails in each row to avoid splitting.

Bearing blocks: Nail type: 0.131"x3"_Gun_nails

BRG	X-LOC	#BLOCKS	LENGTH/BLK	#NAILS/BLK	WALL PLATE
2	5.000'	1	12"	12	Match Truss

Bearing block to be same size and species as bottom chord.
Refer to drawing CNBRGBLK1103 for additional information.

Wind reactions based on MWFRS pressures.

(A) SP #3 or better scab brace. Same size & 80% length of web member. Attach with 10d Box or Gun (0.128"x3",min.)nails @ 6" OC.

Plates sized for a minimum of 3.00 sq.in./piece.

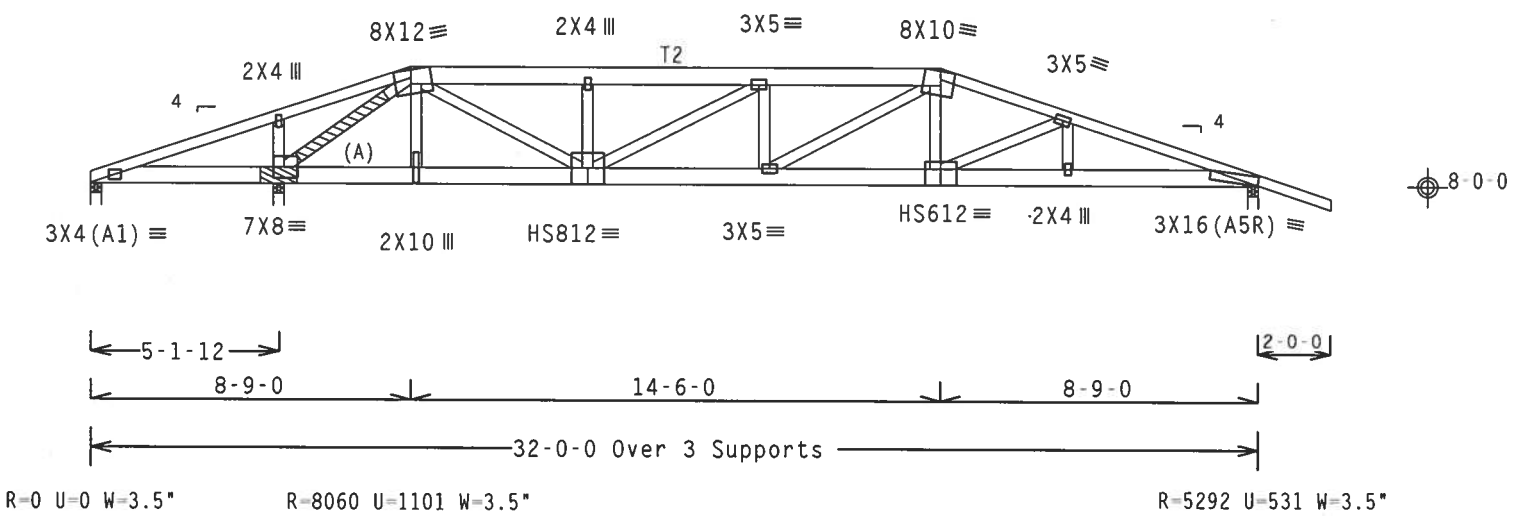

Design Crit: TPI-2002(STD)/FBC

PLT TYP. 20 Gauge HS,Wave Cq/RT=1.00(1.25)/10(0) 7.25.0503 00 QTY:1 FL/-/5/-/-/R/- Scale =.1875"/Ft.

ALPINE
Alpine Engineered Products, Inc.
1950 Marley Drive
Haines City, FL 33844
FL Certificate of Authorization # 567

WARNING TRUSSES REQUIRE EXTREME CARE IN FABRICATION, HANDLING, SHIPPING, INSTALLING AND BRACING. REFER TO BCSI 1-03 (BUILDING COMPONENT SAFETY INFORMATION), PUBLISHED BY TPI (TRUSS PLATE INSTITUTE, 583 D'ONOFRIO DR., SUITE 200, MADISON, WI 53719) AND WTCA (WOOD TRUSS COUNCIL OF AMERICA, 6300 ENTERPRISE LN. MADISON, WI 53719) FOR SAFETY PRACTICES PRIOR TO PERFORMING THESE FUNCTIONS. UNLESS OTHERWISE INDICATED, TOP CHORD SHALL HAVE PROPERLY ATTACHED STRUCTURAL PANELS AND BOTTOM CHORD SHALL HAVE A PROPERLY ATTACHED RIGID CEILING.

IMPORTANTFURNISH A COPY OF THIS DESIGN TO THE INSTALLATION CONTRACTOR. ALPINE ENGINEERED PRODUCTS, INC. SHALL NOT BE RESPONSIBLE FOR ANY DEVIATION FROM THIS DESIGN; ANY FAILURE TO BUILD THE TRUSS IN CONFORMANCE WITH TPI; OR FABRICATING, HANDLING, SHIPPING, INSTALLING & BRACING OF TRUSSES. DESIGN CONFORMS WITH APPLICABLE PROVISIONS OF NDS (NATIONAL DESIGN SPEC, BY AF&PA) AND TPI. ALPINE CONNECTOR PLATES ARE MADE OF 20/18/16GA (W,H/S/K) ASTM A653 GRADE 40/60 (W, K/H,S) GALV. STEEL. APPLY PLATES TO EACH FACE OF TRUSS AND, UNLESS OTHERWISE LOCATED ON THIS DESIGN, POSITION PER DRAWINGS 160A-Z. ANY INSPECTION OF PLATES FOLLOWED BY (1) SHALL BE PER ANNEX A3 OF TPI1-2002 SEC.3. A SEAL ON THIS DRAWING INDICATES ACCEPTANCE OF PROFESSIONAL ENGINEERING RESPONSIBILITY SOLELY FOR THE TRUSS COMPONENT DESIGN SHOWN. THE SUITABILITY AND USE OF THIS COMPONENT FOR ANY BUILDING IS THE RESPONSIBILITY OF THE BUILDING DESIGNER PER ANSI/TPI 1 SEC. 2.

JAMES F. COLLINS, JR. LICENSE No. 52212 STATE OF FLORIDA PROFESSIONAL ENGINEER
Oct 17, 06

TC LL	20.0 PSF	REF R215-- 46935
TC DL	10.0 PSF	DATE 10/16/06
BC DL	10.0 PSF	DRW HCUSR215 06289316
BC LL	0.0 PSF	HC-ENG DAB/AP
TOT.LD.	40.0 PSF	SEQN- 29362
DUR.FAC.	1.25	FROM CAW
SPACING	24.0"	JREF- 1T1I215_Z07

THIS DWG PREPARED FROM COMPUTER INPUT (LOADS & DIMENSIONS) SUBMITTED BY TRUSS MFR.

Top chord 2x4 SP #2 N :T2 2x6 SP #2 Dense:
:T3 2x6 SP SS: :T4 2x4 SP SS:
Bot chord 2x6 SP SS :B1 2x6 SP #2 N:
Webs 2x4 SP #2 N :W3 2x4 SP #2 Dense:

Bearing blocks: Nail type: 0.131"x3"_Gun_nails

BRG	X-LOC	#BLOCKS	LENGTH/BLK	#NAILS/BLK	WALL PLATE
2	5.000'	1	12"	10	Match Truss

Bearing block to be same size and species as bottom chord.
Refer to drawing CNBRGBLK1103 for additional information.

110 mph wind, 15.00 ft mean hgt, ASCE 7-02, CLOSED bldg, not located within 4.50 ft from roof edge, CAT II, EXP B, wind TC DL=5.0 psf, wind BC DL=5.0 psf.

(A) #3 or better scab brace. Same size & 80% length of web member. Attach with 10d Box or Gun (0.128"x3",min.)nails @ 6" OC.

Deflection meets L/240 live and L/180 total load.

Trusses or components connecting to this girder have been modified by the truss designer. The loading for this girder requires verification for accuracy.

SPECIAL LOADS
------(LUMBER DUR.FAC.=1.25 / PLATE DUR.FAC.=1.25)
TC - From 61 PLF at -2.00 to 61 PLF at 7.00
TC - From 61 PLF at 7.00 to 61 PLF at 34.00
BC - From 20 PLF at 0.00 to 20 PLF at 32.00
TC - 355 LB Conc. Load at 7.06, 24.94
TC - 178 LB Conc. Load at 9.06, 11.06, 13.06, 15.06, 16.94 18.94, 20.94, 22.94
BC - 531 LB Conc. Load at 7.00, 25.00
BC - 78 LB Conc. Load at 9.06, 11.06, 13.06, 15.06, 16.94 18.94, 20.94, 22.94

In lieu of structural panels use purlins to brace all flat TC @ 24" OC.

Plates sized for a minimum of 3.00 sq.in./piece.

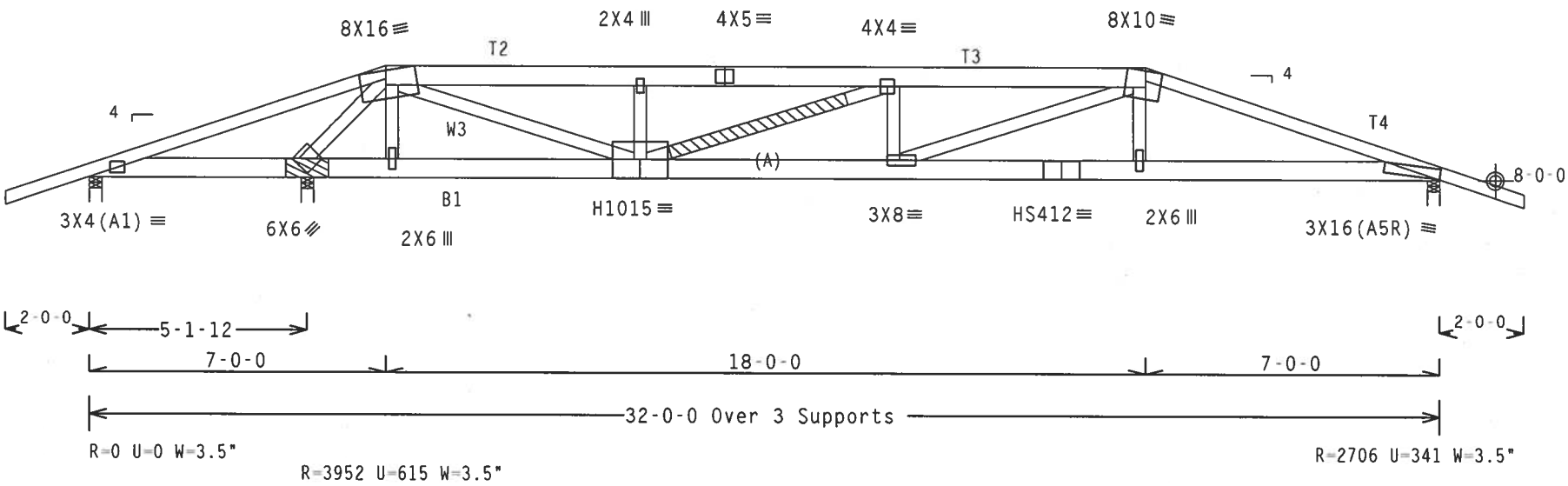

Design Crit: TPI-2002(STD)/FBC

PLT TYP. 20 Gauge HS,Wave Cq/RT=1.00(1.25)/10(0) 7.26.0608 QTY:1 FL/-/5/-/-/R/- Scale =.25"/Ft.

ALPINE
Alpine Engineered Products, Inc.
1950 Marley Drive
Haines City, FL 33844
FL Certificate of Authorization # 567

WARNING TRUSSES REQUIRE EXTREME CARE IN FABRICATION, HANDLING, SHIPPING, INSTALLING AND BRACING. REFER TO BCSI 1-03 (BUILDING COMPONENT SAFETY INFORMATION), PUBLISHED BY TPI (TRUSS PLATE INSTITUTE, 583 D'ONOFRIO DR., SUITE 200, MADISON, WI 53719) AND WTCA (WOOD TRUSS COUNCIL OF AMERICA, 6300 ENTERPRISE LN, MADISON, WI 53719) FOR SAFETY PRACTICES PRIOR TO PERFORMING THESE FUNCTIONS. UNLESS OTHERWISE INDICATED, TOP CHORD SHALL HAVE PROPERLY ATTACHED STRUCTURAL PANELS AND BOTTOM CHORD SHALL HAVE A PROPERLY ATTACHED RIGID CEILING.

IMPORTANTFURNISH A COPY OF THIS DESIGN TO THE INSTALLATION CONTRACTOR. ALPINE ENGINEERED PRODUCTS, INC. SHALL NOT BE RESPONSIBLE FOR ANY DEVIATION FROM THIS DESIGN; ANY FAILURE TO BUILD THE TRUSS IN CONFORMANCE WITH TPI; OR FABRICATING, HANDLING, SHIPPING, INSTALLING & BRACING OF TRUSSES. DESIGN CONFORMS WITH APPLICABLE PROVISIONS OF NDS (NATIONAL DESIGN SPEC. BY AF&PA) AND TPI. ALPINE CONNECTOR PLATES ARE MADE OF 20/18/16GA (W,H/S/K) ASTM A653 GRADE 40/60 (W, K/H,S) GALV. STEEL. APPLY PLATES TO EACH FACE OF TRUSS AND, UNLESS OTHERWISE LOCATED ON THIS DESIGN, POSITION PER DRAWINGS 160A-Z. ANY INSPECTION OF PLATES FOLLOWED BY (I) SHALL BE PER ANNEX A3 OF TPI1-2002 SEC.3. A SEAL ON THIS DRAWING INDICATES ACCEPTANCE OF PROFESSIONAL ENGINEERING RESPONSIBILITY SOLELY FOR THE TRUSS COMPONENT DESIGN SHOWN. THE SUITABILITY AND USE OF THIS COMPONENT FOR ANY BUILDING IS THE RESPONSIBILITY OF THE BUILDING DESIGNER PER ANSI/TPI 1 SEC. 2.

JAMES F. COLLINS LICENSE No 52212 STATE OF FLORIDA PROFESSIONAL ENGINEER
Oct 17 '06

TC LL	20.0 PSF	REF R215-- 46936
TC DL	10.0 PSF	DATE 10/16/06
BC DL	10.0 PSF	DRW HCUSR215 06289318
BC LL	0.0 PSF	HC-ENG DAB/AP
TOT.LD.	40.0 PSF	SEQN- 114027 REV
DUR.FAC.	1.25	FROM CAW
SPACING	24.0"	JREF- 1T1I215_Z07

THIS DWG PREPARED FROM COMPUTER INPUT (LOADS & DIMENSIONS) SUBMITTED BY TRUSS MFR.

Top chord 2x4 SP #2 N
Bot chord 2x4 SP #2 N

Wind reactions based on MWFRS pressures.

Plates sized for a minimum of 3.00 sq.in./piece.

110 mph wind, 15.00 ft mean hgt, ASCE 7-02, CLOSED bldg, Located anywhere in roof, CAT II, EXP B, wind TC DL=5.0 psf, wind BC DL=5.0 psf.

Deflection meets L/240 live and L/180 total load.

The overall height of this truss excluding overhang is 0-7-15.

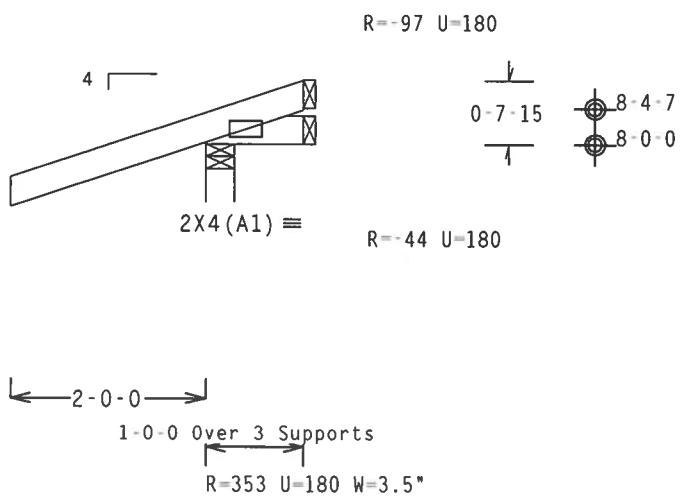

Design Crit: TPI-2002(STD)/FBC

PLT TYP. Wave

Cq/RT=1.00(1.25)/10(0) 7.25.0503.00 QTY:14 FL/-/5/-/-/R/- Scale =.5"/Ft.

ALPINE

Alpine Engineered Products, Inc.
1950 Marley Drive
Haines City, FL 33844
FL Certificate of Authorization # 567

WARNING TRUSSES REQUIRE EXTREME CARE IN FABRICATION, HANDLING, SHIPPING, INSTALLING AND BRACING. REFER TO BCSI 1-03 (BUILDING COMPONENT SAFETY INFORMATION), PUBLISHED BY TPI (TRUSS PLATE INSTITUTE, 583 D'ONOFRIO DR., SUITE 200, MADISON, WI 53719) AND WTCA (WOOD TRUSS COUNCIL OF AMERICA, 6300 ENTERPRISE LN, MADISON, WI 53719) FOR SAFETY PRACTICES PRIOR TO PERFORMING THESE FUNCTIONS. UNLESS OTHERWISE INDICATED, TOP CHORD SHALL HAVE PROPERLY ATTACHED STRUCTURAL PANELS AND BOTTOM CHORD SHALL HAVE A PROPERLY ATTACHED RIGID CEILING.

IMPORTANTFURNISH A COPY OF THIS DESIGN TO THE INSTALLATION CONTRACTOR. ALPINE ENGINEERED PRODUCTS, INC. SHALL NOT BE RESPONSIBLE FOR ANY DEVIATION FROM THIS DESIGN; ANY FAILURE TO BUILD THE TRUSS IN CONFORMANCE WITH TPI; OR FABRICATING, HANDLING, SHIPPING, INSTALLING & BRACING OF TRUSSES. DESIGN CONFORMS WITH APPLICABLE PROVISIONS OF NDS (NATIONAL DESIGN SPEC. BY AF&PA) AND TPI. ALPINE CONNECTOR PLATES ARE MADE OF 20/18/16GA (W,H/S/K) ASTM A653 GRADE 40/60 (W, K/H,S) GALV. STEEL. APPLY PLATES TO EACH FACE OF TRUSS AND, UNLESS OTHERWISE LOCATED ON THIS DESIGN, POSITION PER DRAWINGS 160A-Z. ANY INSPECTION OF PLATES FOLLOWED BY (1) SHALL BE PER ANNEX A3 OF TPI1-2002 SEC.3. A SEAL ON THIS DRAWING INDICATES ACCEPTANCE OF PROFESSIONAL ENGINEERING RESPONSIBILITY SOLELY FOR THE TRUSS COMPONENT DESIGN SHOWN. THE SUITABILITY AND USE OF THIS COMPONENT FOR ANY BUILDING IS THE RESPONSIBILITY OF THE BUILDING DESIGNER PER ANSI/TPI 1 SEC. 2.

JAMES F. COLLINS JR. LICENSED No. 52212 STATE OF FLORIDA PROFESSIONAL ENGINEER

Oct 17, 2006

TC LL	20.0 PSF	REF	R215-- 46937
TC DL	10.0 PSF	DATE	10/16/06
BC DL	10.0 PSF	DRW	HCUSR215 06289280
BC LL	0.0 PSF	HC-ENG	DAB/AP
TOT.LD.	40.0 PSF	SEQN-	36060
DUR.FAC.	1.25	FROM	CAW
SPACING	24.0"	JREF-	1T1I215_Z07

THIS DWG PREPARED FROM COMPUTER INPUT (LOADS & DIMENSIONS) SUBMITTED BY TRUSS MFR.

Top chord 2x4 SP #2 N
Bot chord 2x4 SP #2 N

Wind reactions based on MWFRS pressures.

Plates sized for a minimum of 3.00 sq.in./piece.

110 mph wind, 15.00 ft mean hgt, ASCE 7-02, CLOSED bldg, Located anywhere in roof, CAT II, EXP B, wind TC DL=5.0 psf, wind BC DL=5.0 psf.

Deflection meets L/240 live and L/180 total load.

The overall height of this truss excluding overhang is 1-3-15.

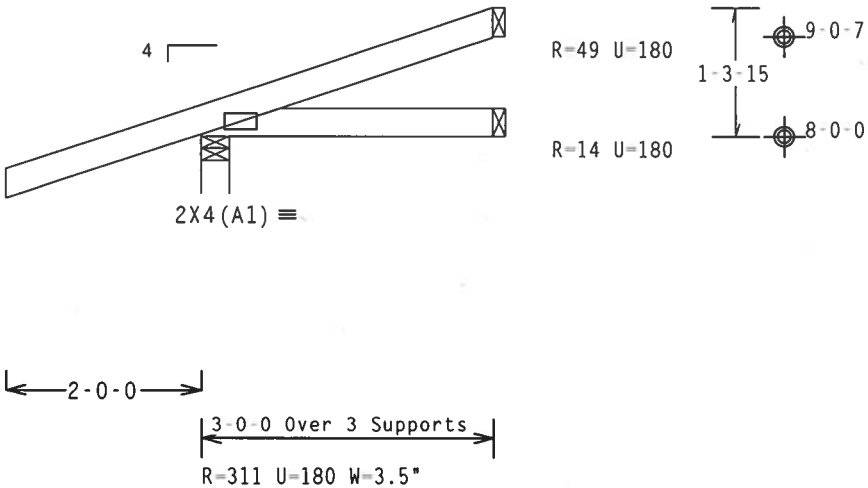

Design Crit: TPI-2002(STD)/FBC

PLT TYP. Wave Cq/RT=1.00(1.25)/10(0) 7.25.0503.09 QTY:12 FL/-/5/-/-/R/- Scale =.5"/Ft.

ALPINE
Alpine Engineered Products, Inc.
1950 Marley Drive
Haines City, FL 33844
FL Certificate of Authorization # 567

WARNING TRUSSES REQUIRE EXTREME CARE IN FABRICATION, HANDLING, SHIPPING, INSTALLING AND BRACING. REFER TO BCSI 1-03 (BUILDING COMPONENT SAFETY INFORMATION), PUBLISHED BY TPI (TRUSS PLATE INSTITUTE, 583 D'ONOFRIO DR., SUITE 200, MADISON, WI 53719) AND WTCA (WOOD TRUSS COUNCIL OF AMERICA, 6300 ENTERPRISE LN, MADISON, WI 53719) FOR SAFETY PRACTICES PRIOR TO PERFORMING THESE FUNCTIONS. UNLESS OTHERWISE INDICATED, TOP CHORD SHALL HAVE PROPERLY ATTACHED STRUCTURAL PANELS AND BOTTOM CHORD SHALL HAVE A PROPERLY ATTACHED RIGID CEILING.

IMPORTANTFURNISH A COPY OF THIS DESIGN TO THE INSTALLATION CONTRACTOR. ALPINE ENGINEERED PRODUCTS, INC. SHALL NOT BE RESPONSIBLE FOR ANY DEVIATION FROM THIS DESIGN; ANY FAILURE TO BUILD THE TRUSS IN CONFORMANCE WITH TPI; OR FABRICATING, HANDLING, SHIPPING, INSTALLING & BRACING OF TRUSSES. DESIGN CONFORMS WITH APPLICABLE PROVISIONS OF NDS (NATIONAL DESIGN SPEC. BY AF&PA) AND TPI. ALPINE CONNECTOR PLATES ARE MADE OF 20/18/16GA (W,H/S/K) ASTM A653 GRADE 40/60 (W, K/H,S) GALV. STEEL. APPLY PLATES TO EACH FACE OF TRUSS AND, UNLESS OTHERWISE LOCATED ON THIS DESIGN, POSITION PER DRAWINGS 160A-Z. ANY INSPECTION OF PLATES FOLLOWED BY (I) SHALL BE PER ANNEX A3 OF TPI1-2002 SEC.3. A SEAL ON THIS DRAWING INDICATES ACCEPTANCE OF PROFESSIONAL ENGINEERING RESPONSIBILITY SOLELY FOR THE TRUSS COMPONENT DESIGN SHOWN. THE SUITABILITY AND USE OF THIS COMPONENT FOR ANY BUILDING IS THE RESPONSIBILITY OF THE BUILDING DESIGNER PER ANSI/TPI 1 SEC. 2.

JAMES F. COLLINS JR. LICENSE No. 52212 STATE OF FLORIDA PROFESSIONAL ENGINEER

Oct 1

TC LL	20.0 PSF	REF	R215-- 46938
TC DL	10.0 PSF	DATE	10/16/06
BC DL	10.0 PSF	DRW	HCUSR215 06289255
BC LL	0.0 PSF	HC-ENG	DAB/AP *
TOT.LD.	40.0 PSF	SEQN-	36066
DUR.FAC.	1.25	FROM	CAW
SPACING	24.0"	JREF-	1T1I215_Z07

Top chord 2x4 SP #2 N
Bot chord 2x4 SP #2 N

Wind reactions based on MWFRS pressures.

Plates sized for a minimum of 3.00 sq.in./piece.

110 mph wind, 15.00 ft mean hgt, ASCE 7-02, CLOSED bldg, not located within 4.50 ft from roof edge, CAT II, EXP B, wind TC DL=5.0 psf, wind BC DL=5.0 psf.

Deflection meets L/240 live and L/180 total load.

The overall height of this truss excluding overhang is 1-11-15.

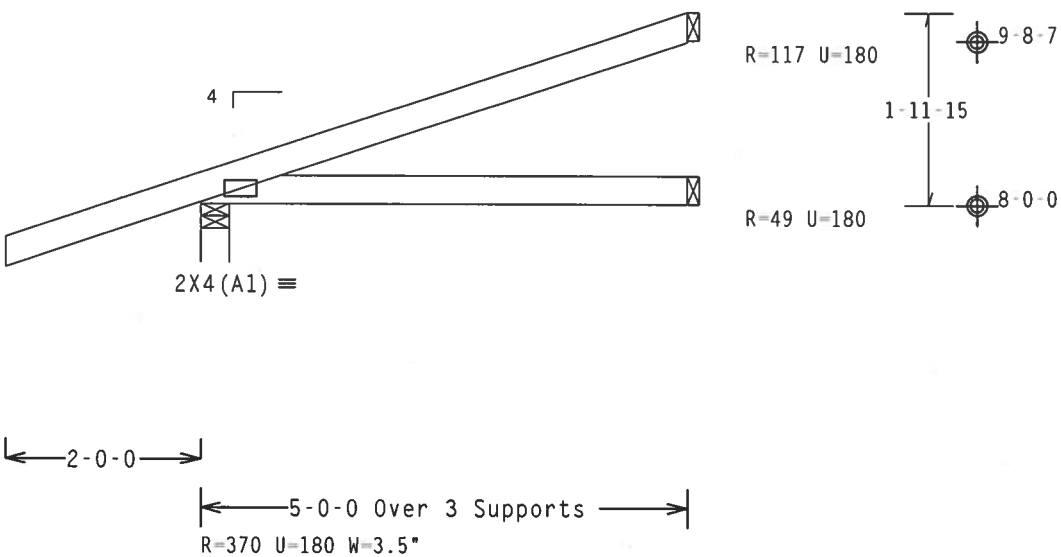

Design Crit: TPI-2002(STD)/FBC

PLT TYP. Wave Cq/RT=1.00(1.25)/10(0) 7.25.0503.00 QTY:4 FL/-/5/-/-/R/- Scale =.5"/Ft.

ALPINE
Alpine Engineered Products, Inc.
1950 Marley Drive
Haines City, FL 33844
FL Certificate of Authorization # 567

WARNING TRUSSES REQUIRE EXTREME CARE IN FABRICATION. HANDLING. SHIPPING. INSTALLING AND BRACING. REFER TO BCSI 1-03 (BUILDING COMPONENT SAFETY INFORMATION), PUBLISHED BY TPI (TRUSS PLATE INSTITUTE, 583 D'ONOFRIO DR., SUITE 200, MADISON, WI 53719) AND WTCA (WOOD TRUSS COUNCIL OF AMERICA, 6300 ENTERPRISE LN. MADISON, WI 53719) FOR SAFETY PRACTICES PRIOR TO PERFORMING THESE FUNCTIONS. UNLESS OTHERWISE INDICATED, TOP CHORD SHALL HAVE PROPERLY ATTACHED STRUCTURAL PANELS AND BOTTOM CHORD SHALL HAVE A PROPERLY ATTACHED RIGID CEILING.

IMPORTANTFURNISH A COPY OF THIS DESIGN TO THE INSTALLATION CONTRACTOR. ALPINE ENGINEERED PRODUCTS, INC. SHALL NOT BE RESPONSIBLE FOR ANY DEVIATION FROM THIS DESIGN; ANY FAILURE TO BUILD THE TRUSS IN CONFORMANCE WITH TPI; OR FABRICATING, HANDLING, SHIPPING, INSTALLING & BRACING OF TRUSSES. DESIGN CONFORMS WITH APPLICABLE PROVISIONS OF NDS (NATIONAL DESIGN SPEC. BY AF&PA) AND TPI. ALPINE CONNECTOR PLATES ARE MADE OF 20/18/16GA (W,H/S/K) ASTM A653 GRADE 40/60 (W, K/H,S) GALV. STEEL. APPLY PLATES TO EACH FACE OF TRUSS AND, UNLESS OTHERWISE LOCATED ON THIS DESIGN, POSITION PER DRAWINGS 160A-Z. ANY INSPECTION OF PLATES FOLLOWED BY (1) SHALL BE PER ANNEX A3 OF TPI1-2002 SEC.3. A SEAL ON THIS DRAWING INDICATES ACCEPTANCE OF PROFESSIONAL ENGINEERING RESPONSIBILITY SOLELY FOR THE TRUSS COMPONENT DESIGN SHOWN. THE SUITABILITY AND USE OF THIS COMPONENT FOR ANY BUILDING IS THE RESPONSIBILITY OF THE BUILDING DESIGNER PER ANSI/TPI 1 SEC. 2.

JAMES F. COLLINS, JR. LICENSE No. 52212 STATE OF FLORIDA PROFESSIONAL ENGINEER

Oct 1

TC LL	20.0 PSF	REF R215-- 46939
TC DL	10.0 PSF	DATE 10/16/06
BC DL	10.0 PSF	DRW HCUSR215 06289256
BC LL	0.0 PSF	HC-ENG DAB/AP *
TOT.LD.	40.0 PSF	SEQN- 36092
DUR.FAC.	1.25	FROM CAW
SPACING	24.0"	JREF- 1T1I215_Z07

THIS DWG PREPARED FROM COMPUTER INPUT (LOADS & DIMENSIONS) SUBMITTED BY TRUSS MFR.

Top chord 2x4 SP #2 N
Bot chord 2x4 SP #2 N

Wind reactions based on MWFRS pressures.

Plates sized for a minimum of 3.00 sq.in./piece.

110 mph wind, 15.00 ft mean hgt, ASCE 7-02, CLOSED bldg, Located anywhere in roof, CAT II, EXP B, wind TC DL=5.0 psf, wind BC DL=5.0 psf.

Deflection meets L/240 live and L/180 total load.

The overall height of this truss excluding overhang is 1-6-15.

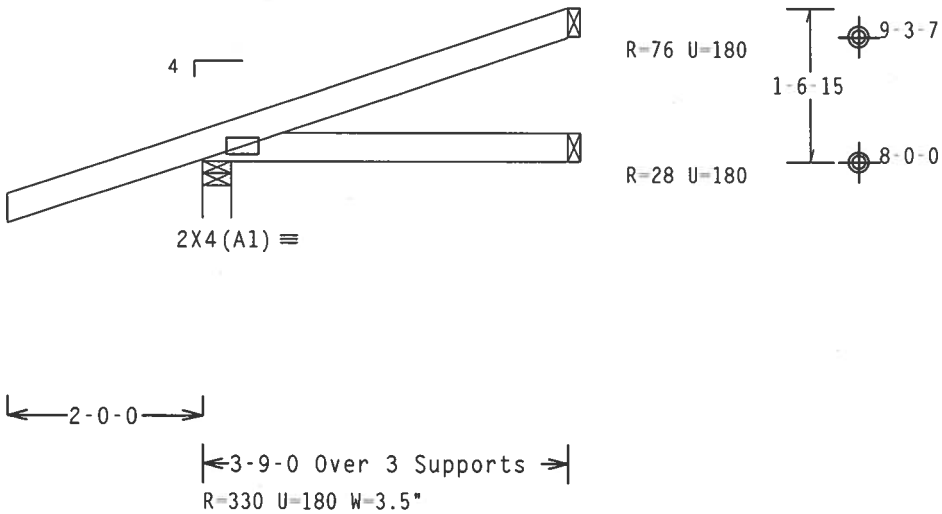

Design Crit: TPI-2002(STD)/FBC

PLT TYP. Wave Cq/RT=1.00(1.25)/10(0) 7.25.0503 QTY:4 FL/-/5/-/-/R/- Scale =.5"/Ft.

ALPINE
Alpine Engineered Products, Inc.
1950 Marley Drive
Haines City, FL 33844
FL Certificate of Authorization # 567

WARNING TRUSSES REQUIRE EXTREME CARE IN FABRICATION, HANDLING, SHIPPING, INSTALLING AND BRACING. REFER TO BCSI 1-03 (BUILDING COMPONENT SAFETY INFORMATION), PUBLISHED BY TPI (TRUSS PLATE INSTITUTE, 583 D'ONOFRIO DR., SUITE 200, MADISON, WI 53719) AND WTCA (WOOD TRUSS COUNCIL OF AMERICA, 6300 ENTERPRISE LN, MADISON, WI 53719) FOR SAFETY PRACTICES PRIOR TO PERFORMING THESE FUNCTIONS. UNLESS OTHERWISE INDICATED, TOP CHORD SHALL HAVE PROPERLY ATTACHED STRUCTURAL PANELS AND BOTTOM CHORD SHALL HAVE A PROPERLY ATTACHED RIGID CEILING.

IMPORTANTFURNISH A COPY OF THIS DESIGN TO THE INSTALLATION CONTRACTOR. ALPINE ENGINEERED PRODUCTS, INC. SHALL NOT BE RESPONSIBLE FOR ANY DEVIATION FROM THIS DESIGN; ANY FAILURE TO BUILD THE TRUSS IN CONFORMANCE WITH TPI; OR FABRICATING, HANDLING, SHIPPING, INSTALLING & BRACING OF TRUSSES. DESIGN CONFORMS WITH APPLICABLE PROVISIONS OF NDS (NATIONAL DESIGN SPEC. BY AF&PA) AND TPI. ALPINE CONNECTOR PLATES ARE MADE OF 20/18/16GA (W,H/S/K) ASTM A653 GRADE 40/60 (W, K/H,S) GALV. STEEL. APPLY PLATES TO EACH FACE OF TRUSS AND, UNLESS OTHERWISE LOCATED ON THIS DESIGN, POSITION PER DRAWINGS 160A-Z. ANY INSPECTION OF PLATES FOLLOWED BY (1) SHALL BE PER ANNEX A3 OF TPI1-2002 SEC.3. A SEAL ON THIS DRAWING INDICATES ACCEPTANCE OF PROFESSIONAL ENGINEERING RESPONSIBILITY SOLELY FOR THE TRUSS COMPONENT DESIGN SHOWN. THE SUITABILITY AND USE OF THIS COMPONENT FOR ANY BUILDING IS THE RESPONSIBILITY OF THE BUILDING DESIGNER PER ANSI/TPI 1 SEC. 2.

JAMES F. COLLINS JR. LICENSE No. 52212 STATE OF FLORIDA PROFESSIONAL ENGINEER
Oct 17 '06

TC LL	20.0 PSF	REF R215-- 46940
TC DL	10.0 PSF	DATE 10/16/06
BC DL	10.0 PSF	DRW HCUSR215 06289257
BC LL	0.0 PSF	HC-ENG DAB/AP *
TOT.LD.	40.0 PSF	SEQN- 36109
DUR.FAC.	1.25	FROM CAW
SPACING	24.0"	JREF- 1T1I215_Z07

THIS DWG PREPARED FROM COMPUTER INPUT (LOADS & DIMENSIONS) SUBMITTED BY TRUSS MFR.

Top chord 2x4 SP #2 N
Bot chord 2x4 SP #2 N

Wind reactions based on MWFRS pressures.

Plates sized for a minimum of 3.00 sq.in./piece.

110 mph wind, 15.00 ft mean hgt, ASCE 7-02, CLOSED bldg, not located within 4.50 ft from roof edge, CAT II, EXP B, wind TC DL=5.0 psf, wind BC DL=5.0 psf.

Deflection meets L/240 live and L/180 total load.

The overall height of this truss excluding overhang is 1-11-7.

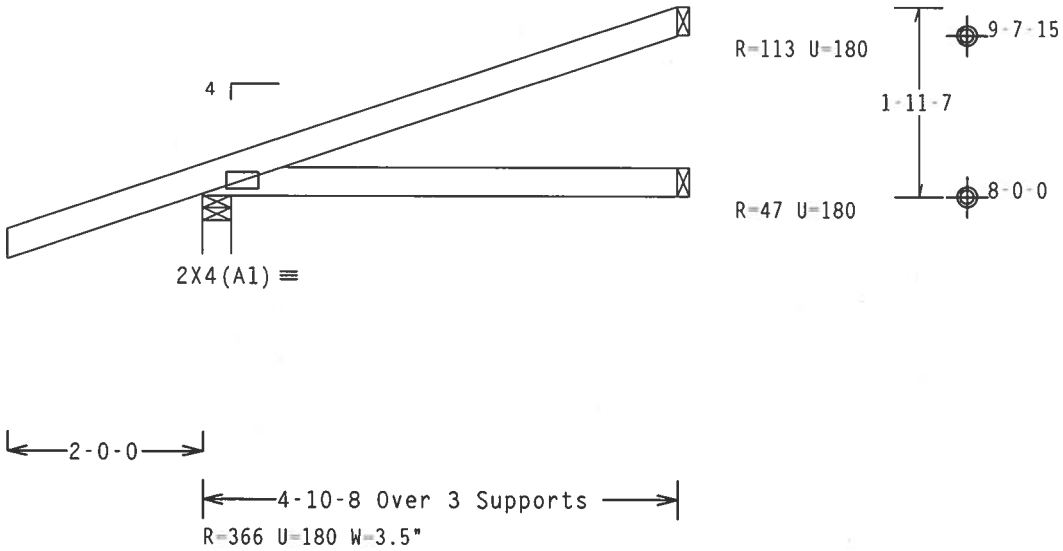

Design Crit: TPI-2002(STD)/FBC

PLT TYP. Wave Cq/RT=1.00(1.25)/10(0) 7.25.0503.00 QTY:9 FL/-/5/-/-/R/- Scale =.5"/Ft.

ALPINE
Alpine Engineered Products, Inc.
1950 Marley Drive
Haines City, FL 33844
FL Certificate of Authorization # 567

WARNING TRUSSES REQUIRE EXTREME CARE IN FABRICATION, HANDLING, SHIPPING, INSTALLING AND BRACING. REFER TO BCSI 1-03 (BUILDING COMPONENT SAFETY INFORMATION), PUBLISHED BY TPI (TRUSS PLATE INSTITUTE, 583 D'ONOFRIO DR., SUITE 200, MADISON, WI 53719) AND WTCA (WOOD TRUSS COUNCIL OF AMERICA, 6300 ENTERPRISE LN, MADISON, WI 53719) FOR SAFETY PRACTICES PRIOR TO PERFORMING THESE FUNCTIONS. UNLESS OTHERWISE INDICATED, TOP CHORD SHALL HAVE PROPERLY ATTACHED STRUCTURAL PANELS AND BOTTOM CHORD SHALL HAVE A PROPERLY ATTACHED RIGID CEILING.

IMPORTANTFURNISH A COPY OF THIS DESIGN TO THE INSTALLATION CONTRACTOR. ALPINE ENGINEERED PRODUCTS, INC. SHALL NOT BE RESPONSIBLE FOR ANY DEVIATION FROM THIS DESIGN; ANY FAILURE TO BUILD THE TRUSS IN CONFORMANCE WITH TPI; OR FABRICATING, HANDLING, SHIPPING, INSTALLING & BRACING OF TRUSSES. DESIGN CONFORMS WITH APPLICABLE PROVISIONS OF NDS (NATIONAL DESIGN SPEC. BY AF&PA) AND TPI. ALPINE CONNECTOR PLATES ARE MADE OF 20/18/16GA (W,H/S/K) ASTM A653 GRADE 40/60 (W, K/H,S) GALV. STEEL. APPLY PLATES TO EACH FACE OF TRUSS AND, UNLESS OTHERWISE LOCATED ON THIS DESIGN, POSITION PER DRAWINGS 160A-Z. ANY INSPECTION OF PLATES FOLLOWED BY (I) SHALL BE PER ANNEX A3 OF TPI1-2002 SEC.3. A SEAL ON THIS DRAWING INDICATES ACCEPTANCE OF PROFESSIONAL ENGINEERING RESPONSIBILITY SOLELY FOR THE TRUSS COMPONENT DESIGN SHOWN. THE SUITABILITY AND USE OF THIS COMPONENT FOR ANY BUILDING IS THE RESPONSIBILITY OF THE BUILDING DESIGNER PER ANSI/TPI 1 SEC. 2.

JAMES F. COLLINS, JR. LICENSE No. 52214 STATE OF FLORIDA PROFESSIONAL ENGINEER
Oct 17, 06

TC LL	20.0 PSF	REF	R215-- 46941
TC DL	10.0 PSF	DATE	10/16/06
BC DL	10.0 PSF	DRW	HCUSR215 06289258
BC LL	0.0 PSF	HC-ENG	DAB/AP *
TOT.LD.	40.0 PSF	SEQN-	36057
DUR.FAC.	1.25	FROM	CAW
SPACING	24.0"	JREF-	1T1I215_Z07

THIS DWG PREPARED FROM COMPUTER INPUT (LOADS & DIMENSIONS) SUBMITTED BY TRUSS MFR.

Top chord 2x4 SP #2 N
Bot chord 2x4 SP #2 N
Webs 2x4 SP #2 N

Wind reactions based on MWFRS pressures.

Deflection meets L/240 live and L/180 total load.

The overall height of this truss excluding overhang is 2-5-4.

110 mph wind, 15.00 ft mean hgt, ASCE 7-02, CLOSED bldg, not located within 4.50 ft from roof edge, CAT II, EXP B, wind TC DL=5.0 psf, wind BC DL=5.0 psf.

Right end vertical not exposed to wind pressure.

Plates sized for a minimum of 3.00 sq.in./piece.

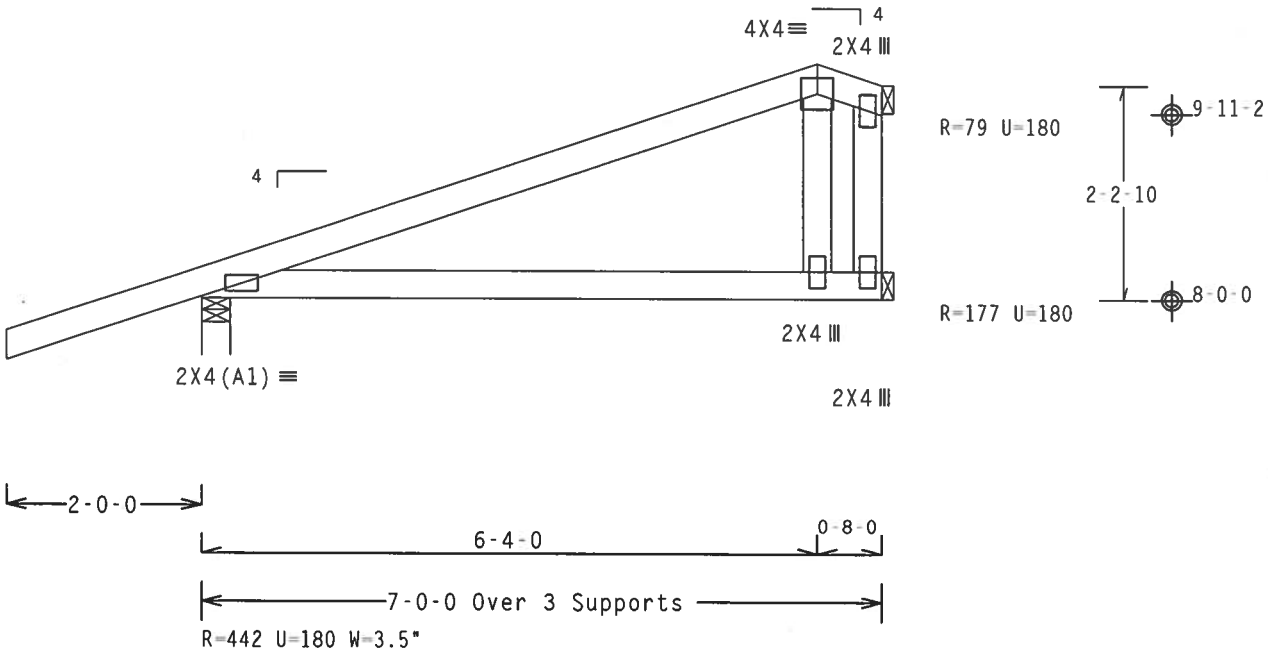

Design Crit: TPI-2002(STD)/FBC

PLT TYP. Wave Cq/RT=1.00(1.25)/10(0) 7.25.0503 QTY:2 FL/-/5/-/-/R/- Scale =.5"/Ft.

ALPINE
Alpine Engineered Products, Inc.
1950 Marley Drive
Haines City, FL 33844
FL Certificate of Authorization # 567

WARNING TRUSSES REQUIRE EXTREME CARE IN FABRICATION, HANDLING, SHIPPING, INSTALLING AND BRACING. REFER TO BCSI 1-03 (BUILDING COMPONENT SAFETY INFORMATION), PUBLISHED BY TPI (TRUSS PLATE INSTITUTE, 583 D'ONOFRIO DR., SUITE 200, MADISON, WI 53719) AND WTCA (WOOD TRUSS COUNCIL OF AMERICA, 6300 ENTERPRISE LN, MADISON, WI 53719) FOR SAFETY PRACTICES PRIOR TO PERFORMING THESE FUNCTIONS. UNLESS OTHERWISE INDICATED, TOP CHORD SHALL HAVE PROPERLY ATTACHED STRUCTURAL PANELS AND BOTTOM CHORD SHALL HAVE A PROPERLY ATTACHED RIGID CEILING.

IMPORTANTFURNISH A COPY OF THIS DESIGN TO THE INSTALLATION CONTRACTOR. ALPINE ENGINEERED PRODUCTS, INC. SHALL NOT BE RESPONSIBLE FOR ANY DEVIATION FROM THIS DESIGN; ANY FAILURE TO BUILD THE TRUSS IN CONFORMANCE WITH TPI; OR FABRICATING, HANDLING, SHIPPING, INSTALLING & BRACING OF TRUSSES. DESIGN CONFORMS WITH APPLICABLE PROVISIONS OF NDS (NATIONAL DESIGN SPEC, BY AF&PA) AND TPI. ALPINE CONNECTOR PLATES ARE MADE OF 20/18/16GA (W,H/S/K) ASTM A653 GRADE 40/60 (W, K/H,S) GALV. STEEL. APPLY PLATES TO EACH FACE OF TRUSS AND, UNLESS OTHERWISE LOCATED ON THIS DESIGN, POSITION PER DRAWINGS 160A-Z. ANY INSPECTION OF PLATES FOLLOWED BY (1) SHALL BE PER ANNEX A3 OF TPI1-2002 SEC.3. A SEAL ON THIS DRAWING INDICATES ACCEPTANCE OF PROFESSIONAL ENGINEERING RESPONSIBILITY SOLELY FOR THE TRUSS COMPONENT DESIGN SHOWN. THE SUITABILITY AND USE OF THIS COMPONENT FOR ANY BUILDING IS THE RESPONSIBILITY OF THE BUILDING DESIGNER PER ANSI/TPI 1 SEC. 2.

JAMES F. COLLINS, JR. LICENSE No. 52212 STATE OF FLORIDA PROFESSIONAL ENGINEER
Oct 17 '06

TC LL	20.0 PSF	REF	R215-- 46942
TC DL	10.0 PSF	DATE	10/16/06
BC DL	10.0 PSF	DRW	HCUSR215 06289259
BC LL	0.0 PSF	HC-ENG	DAB/AP *
TOT.LD.	40.0 PSF	SEQN-	36332
DUR.FAC.	1.25	FROM	CAW
SPACING	24.0"	JREF-	1T1I215_Z07

THIS DWG PREPARED FROM COMPUTER INPUT (LOADS & DIMENSIONS) SUBMITTED BY TRUSS MFR.

Top chord 2x4 SP #2 N
Bot chord 2x4 SP #2 N

Wind reactions based on MWFRS pressures.

Plates sized for a minimum of 3.00 sq.in./piece.

110 mph wind, 15.00 ft mean hgt, ASCE 7-02, CLOSED bldg, not located within 4.50 ft from roof edge, CAT II, EXP B, wind TC DL=5.0 psf, wind BC DL=5.0 psf.

Deflection meets L/240 live and L/180 total load.

The overall height of this truss excluding overhang is 2-7-15.

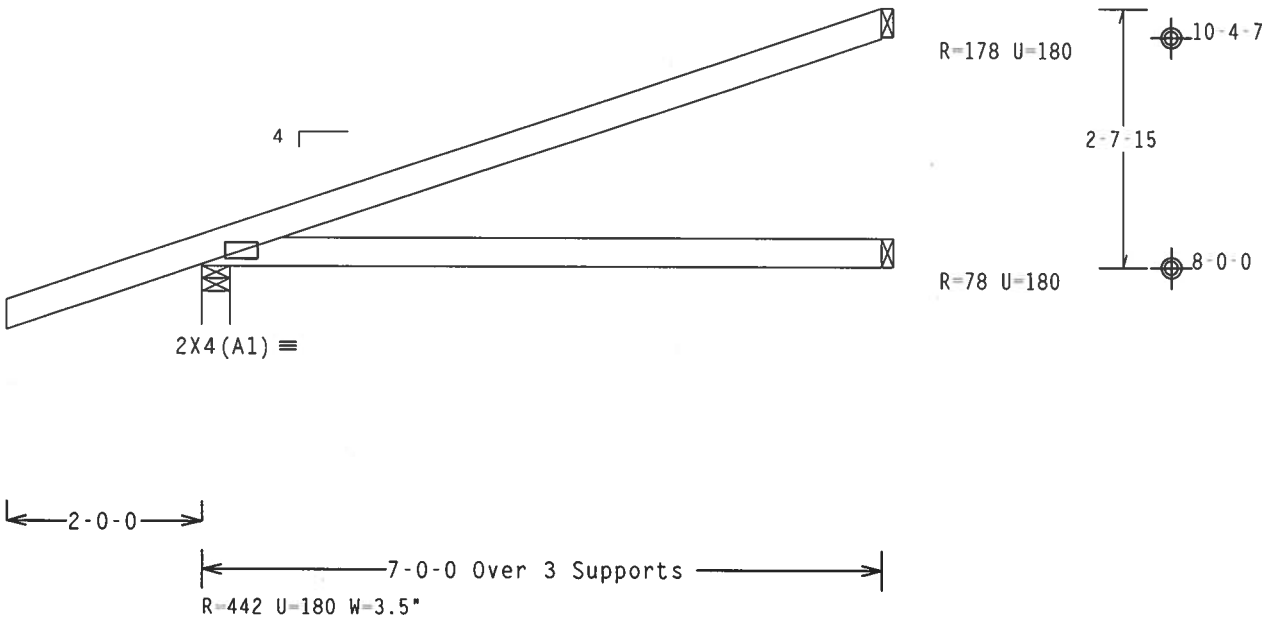

Design Crit: TPI-2002(STD)/FBC

PLT TYP. Wave Cq/RT=1.00(1.25)/10(0) 7.25.0503.00 QTY:31 FL/-/5/-/-/R/- Scale =.5"/Ft.

ALPINE
Alpine Engineered Products, Inc.
1950 Marley Drive
Haines City, FL 33844
FL Certificate of Authorization # 567

WARNING TRUSSES REQUIRE EXTREME CARE IN FABRICATION, HANDLING, SHIPPING, INSTALLING AND BRACING. REFER TO BCSI 1-03 (BUILDING COMPONENT SAFETY INFORMATION), PUBLISHED BY TPI (TRUSS PLATE INSTITUTE, 583 D'ONOFRIO DR., SUITE 200, MADISON, WI 53719) AND WTCA (WOOD TRUSS COUNCIL OF AMERICA, 6300 ENTERPRISE LN, MADISON, WI 53719) FOR SAFETY PRACTICES PRIOR TO PERFORMING THESE FUNCTIONS. UNLESS OTHERWISE INDICATED, TOP CHORD SHALL HAVE PROPERLY ATTACHED STRUCTURAL PANELS AND BOTTOM CHORD SHALL HAVE A PROPERLY ATTACHED RIGID CEILING.

IMPORTANTFURNISH A COPY OF THIS DESIGN TO THE INSTALLATION CONTRACTOR. ALPINE ENGINEERED PRODUCTS, INC. SHALL NOT BE RESPONSIBLE FOR ANY DEVIATION FROM THIS DESIGN; ANY FAILURE TO BUILD THE TRUSS IN CONFORMANCE WITH TPI; OR FABRICATING, HANDLING, SHIPPING, INSTALLING & BRACING OF TRUSSES. DESIGN CONFORMS WITH APPLICABLE PROVISIONS OF NDS (NATIONAL DESIGN SPEC. BY AF&PA) AND TPI. ALPINE CONNECTOR PLATES ARE MADE OF 20/18/16GA (W,H/S/K) ASTM A653 GRADE 40/60 (W, K/H,S) GALV. STEEL. APPLY PLATES TO EACH FACE OF TRUSS AND, UNLESS OTHERWISE LOCATED ON THIS DESIGN, POSITION PER DRAWINGS 160A-Z. ANY INSPECTION OF PLATES FOLLOWED BY (1) SHALL BE PER ANNEX A3 OF TPI1-2002 SEC.3. A SEAL ON THIS DRAWING INDICATES ACCEPTANCE OF PROFESSIONAL ENGINEERING RESPONSIBILITY SOLELY FOR THE TRUSS COMPONENT DESIGN SHOWN. THE SUITABILITY AND USE OF THIS COMPONENT FOR ANY BUILDING IS THE RESPONSIBILITY OF THE BUILDING DESIGNER PER ANSI/TPI 1 SEC. 2.

JAMES F. COLLINS, JR. LICENSE No. 52212 STATE OF FLORIDA PROFESSIONAL ENGINEER
Oct 16

TC LL	20.0 PSF	REF	R215-- 46943
TC DL	10.0 PSF	DATE	10/16/06
BC DL	10.0 PSF	DRW	HCUSR215 06289260
BC LL	0.0 PSF	HC-ENG	DAB/AP *
TOT.LD.	40.0 PSF	SEQN-	36088
DUR.FAC.	1.25	FROM	CAW
SPACING	24.0"	JREF-	1T1I215_Z07

Top chord 2x4 SP #2 N
Bot chord 2x4 SP #2 N
Webs 2x4 SP #2 N

Wind reactions based on MWFRS pressures.

Deflection meets L/240 live and L/180 total load.

The overall height of this truss excluding overhang is 1-11-7.

110 mph wind, 15.00 ft mean hgt, ASCE 7-02, CLOSED bldg, not located within 4.50 ft from roof edge, CAT II, EXP B, wind TC DL=5.0 psf, wind BC DL=5.0 psf.

In lieu of structural panels use purlins to brace all flat TC @ 24" OC.

Plates sized for a minimum of 3.00 sq.in./piece.

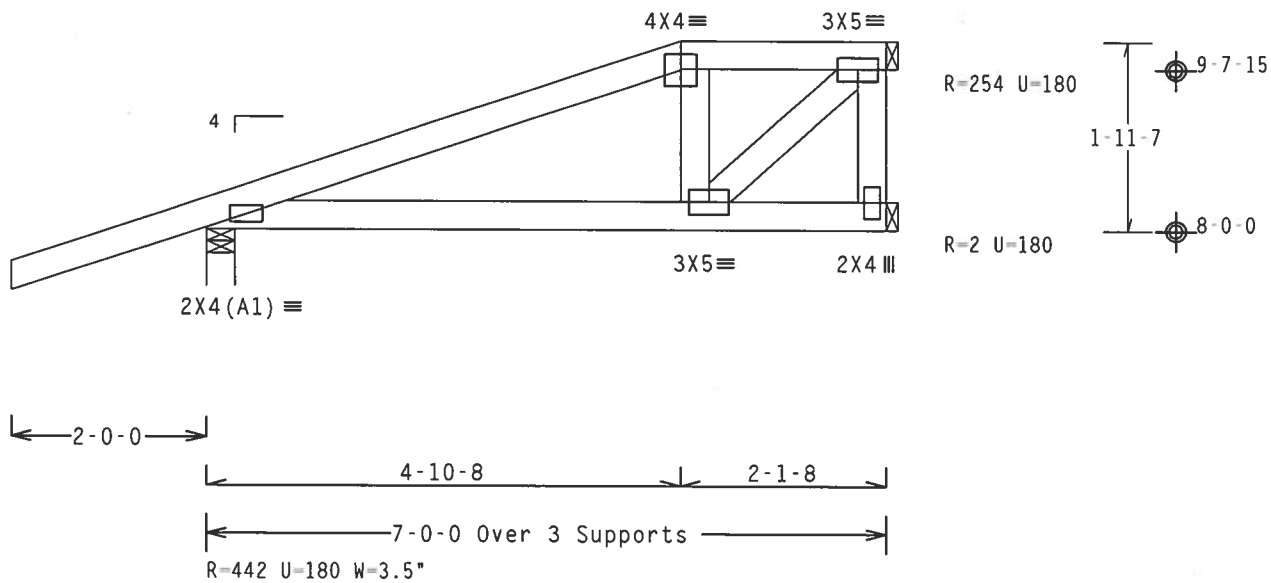

Design Crit: TPI-2002(STD)/FBC

PLT TYP. Wave

Cq/RT=1.00(1.25)/10(0) 7.25.0503 QTY:1 FL/-/5/-/-/R/- Scale =.5"/Ft.

ALPINE

Alpine Engineered Products, Inc.
1950 Marley Drive
Haines City, FL 33844
FL Certificate of Authorization # 567

WARNING TRUSSES REQUIRE EXTREME CARE IN FABRICATION, HANDLING, SHIPPING, INSTALLING AND BRACING. REFER TO BCSI 1-03 (BUILDING COMPONENT SAFETY INFORMATION), PUBLISHED BY TPI (TRUSS PLATE INSTITUTE, 583 D'ONOFRIO DR., SUITE 200, MADISON, WI 53719) AND WTCA (WOOD TRUSS COUNCIL OF AMERICA, 6300 ENTERPRISE LN, MADISON, WI 53719) FOR SAFETY PRACTICES PRIOR TO PERFORMING THESE FUNCTIONS. UNLESS OTHERWISE INDICATED, TOP CHORD SHALL HAVE PROPERLY ATTACHED STRUCTURAL PANELS AND BOTTOM CHORD SHALL HAVE A PROPERLY ATTACHED RIGID CEILING.

IMPORTANTFURNISH A COPY OF THIS DESIGN TO THE INSTALLATION CONTRACTOR. ALPINE ENGINEERED PRODUCTS, INC. SHALL NOT BE RESPONSIBLE FOR ANY DEVIATION FROM THIS DESIGN; ANY FAILURE TO BUILD THE TRUSS IN CONFORMANCE WITH TPI; OR FABRICATING, HANDLING, SHIPPING, INSTALLING & BRACING OF TRUSSES. DESIGN CONFORMS WITH APPLICABLE PROVISIONS OF NDS (NATIONAL DESIGN SPEC. BY AF&PA) AND TPI. ALPINE CONNECTOR PLATES ARE MADE OF 20/18/16GA (W,H/S/K) ASTM A653 GRADE 40/60 (W, K/H,S) GALV. STEEL. APPLY PLATES TO EACH FACE OF TRUSS AND, UNLESS OTHERWISE LOCATED ON THIS DESIGN, POSITION PER DRAWINGS 160A-Z. ANY INSPECTION OF PLATES FOLLOWED BY (I) SHALL BE PER ANNEX A3 OF TPI1-2002 SEC.3. A SEAL ON THIS DRAWING INDICATES ACCEPTANCE OF PROFESSIONAL ENGINEERING RESPONSIBILITY SOLELY FOR THE TRUSS COMPONENT DESIGN SHOWN. THE SUITABILITY AND USE OF THIS COMPONENT FOR ANY BUILDING IS THE RESPONSIBILITY OF THE BUILDING DESIGNER PER ANSI/TPI 1 SEC. 2.

JAMES F. COLLINS, JR. LICENSE No. 52212 STATE OF FLORIDA PROFESSIONAL ENGINEER

Oct 17, 06

TC LL	20.0 PSF	REF	R215-- 46944
TC DL	10.0 PSF	DATE	10/16/06
BC DL	10.0 PSF	DRW	HCUSR215 06289261
BC LL	0.0 PSF	HC-ENG	DAB/AP *
TOT.LD.	40.0 PSF	SEQN-	36135
DUR.FAC.	1.25	FROM	CAW
SPACING	24.0"	JREF-	1T1I215_Z07

Top chord 2x4 SP #2 N
Bot chord 2x4 SP #2 N

110 mph wind, 15.00 ft mean hgt, ASCE 7-02, CLOSED bldg, not located within 4.50 ft from roof edge, CAT II, EXP B, wind TC DL=5.0 psf, wind BC DL=5.0 psf.

Wind reactions based on MWFRS pressures.

Deflection meets L/240 live and L/180 total load.

Top chord overhangs have been checked only for loads as indicates. Overhangs not checked for man loads or long-term deflection.

SPECIAL LOADS
-------(LUMBER DUR.FAC.=1.25 / PLATE DUR.FAC.=1.25)

TC -	From	61 PLF	at -2.83	to	61 PLF	at	5.30
BC -	From	4 PLF	at -2.83	to	4 PLF	at	0.00
BC -	From	20 PLF	at 0.00	to	20 PLF	at	5.30
TC -		194 LB Conc. Load	at 1.48				
TC -		125 LB Conc. Load	at 4.31				
BC -		89 LB Conc. Load	at 1.48				
BC -		53 LB Conc. Load	at 4.31				

Plates sized for a minimum of 3.00 sq.in./piece.

The overall height of this truss excluding overhang is 1-6-12.

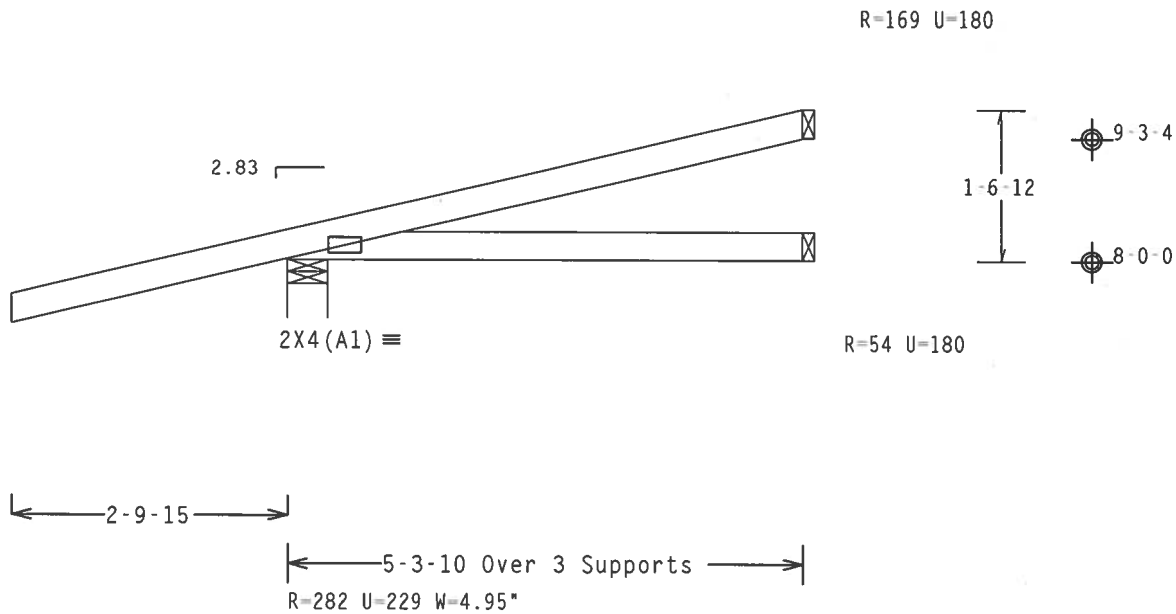

Design Crit: TPI-2002(STD)/FBC

PLT TYP. Wave — Cq/RT=1.00(1.25)/10(0) 7.25.0503.00 — QTY:2 — FL/-/5/-/-/R/- — Scale =.5"/Ft.

ALPINE
Alpine Engineered Products, Inc.
1950 Marley Drive
Haines City, FL 33844
FL Certificate of Authorization # 567

WARNING TRUSSES REQUIRE EXTREME CARE IN FABRICATION, HANDLING, SHIPPING, INSTALLING AND BRACING. REFER TO BCSI 1-03 (BUILDING COMPONENT SAFETY INFORMATION), PUBLISHED BY TPI (TRUSS PLATE INSTITUTE, 583 D'ONOFRIO DR., SUITE 200, MADISON, WI 53719) AND WTCA (WOOD TRUSS COUNCIL OF AMERICA, 6300 ENTERPRISE LN, MADISON, WI 53719) FOR SAFETY PRACTICES PRIOR TO PERFORMING THESE FUNCTIONS. UNLESS OTHERWISE INDICATED, TOP CHORD SHALL HAVE PROPERLY ATTACHED STRUCTURAL PANELS AND BOTTOM CHORD SHALL HAVE A PROPERLY ATTACHED RIGID CEILING.

IMPORTANTFURNISH A COPY OF THIS DESIGN TO THE INSTALLATION CONTRACTOR. ALPINE ENGINEERED PRODUCTS, INC. SHALL NOT BE RESPONSIBLE FOR ANY DEVIATION FROM THIS DESIGN; ANY FAILURE TO BUILD THE TRUSS IN CONFORMANCE WITH TPI; OR FABRICATING, HANDLING, SHIPPING, INSTALLING & BRACING OF TRUSSES, DESIGN CONFORMS WITH APPLICABLE PROVISIONS OF NDS (NATIONAL DESIGN SPEC. BY AF&PA) AND TPI. ALPINE CONNECTOR PLATES ARE MADE OF 20/18/16GA (W.H/S/K) ASTM A653 GRADE 40/60 (W. K/H.S) GALV. STEEL. APPLY PLATES TO EACH FACE OF TRUSS AND, UNLESS OTHERWISE LOCATED ON THIS DESIGN, POSITION PER DRAWINGS 160A-Z. ANY INSPECTION OF PLATES FOLLOWED BY (1) SHALL BE PER ANNEX A3 OF TPI1-2002 SEC.3. A SEAL ON THIS DRAWING INDICATES ACCEPTANCE OF PROFESSIONAL ENGINEERING RESPONSIBILITY SOLELY FOR THE TRUSS COMPONENT DESIGN SHOWN. THE SUITABILITY AND USE OF THIS COMPONENT FOR ANY BUILDING IS THE RESPONSIBILITY OF THE BUILDING DESIGNER PER ANSI/TPI 1 SEC. 2.

JAMES F. COLLINS, JR. LICENSED No. 52212 STATE OF FLORIDA PROFESSIONAL ENGINEER

Oct

TC LL	20.0 PSF	REF R215-- 46945
TC DL	10.0 PSF	DATE 10/16/06
BC DL	10.0 PSF	DRW HCUSR215 06289285
BC LL	0.0 PSF	HC-ENG DAB/AP
TOT.LD.	40.0 PSF	SEQN- 36147
DUR.FAC.	1.25	FROM CAW
SPACING	24.0"	JREF- 1T1I215_Z07

THIS DWG PREPARED FROM COMPUTER INPUT (LOADS & DIMENSIONS) SUBMITTED BY TRUSS MFR.

Top chord 2x4 SP #2 N
Bot chord 2x4 SP #2 N

110 mph wind, 15.00 ft mean hgt, ASCE 7-02, CLOSED bldg, not located within 4.50 ft from roof edge, CAT II, EXP B, wind TC DL=5.0 psf, wind BC DL=5.0 psf.

Wind reactions based on MWFRS pressures.

Deflection meets L/240 live and L/180 total load.

The overall height of this truss excluding overhang is 1-11-4.

SPECIAL LOADS
------(LUMBER DUR.FAC.=1.25 / PLATE DUR.FAC.=1.25)

TC -	From	61 PLF	at -2.83	to	61 PLF	at	6.89
BC -	From	4 PLF	at -2.83	to	4 PLF	at	0.00
BC -	From	20 PLF	at 0.00	to	20 PLF	at	6.89
TC -	194 LB Conc. Load at 1.48						
TC -	125 LB Conc. Load at 4.31						
BC -	89 LB Conc. Load at 1.48						
BC -	53 LB Conc. Load at 4.31						

Plates sized for a minimum of 3.00 sq.in./piece.

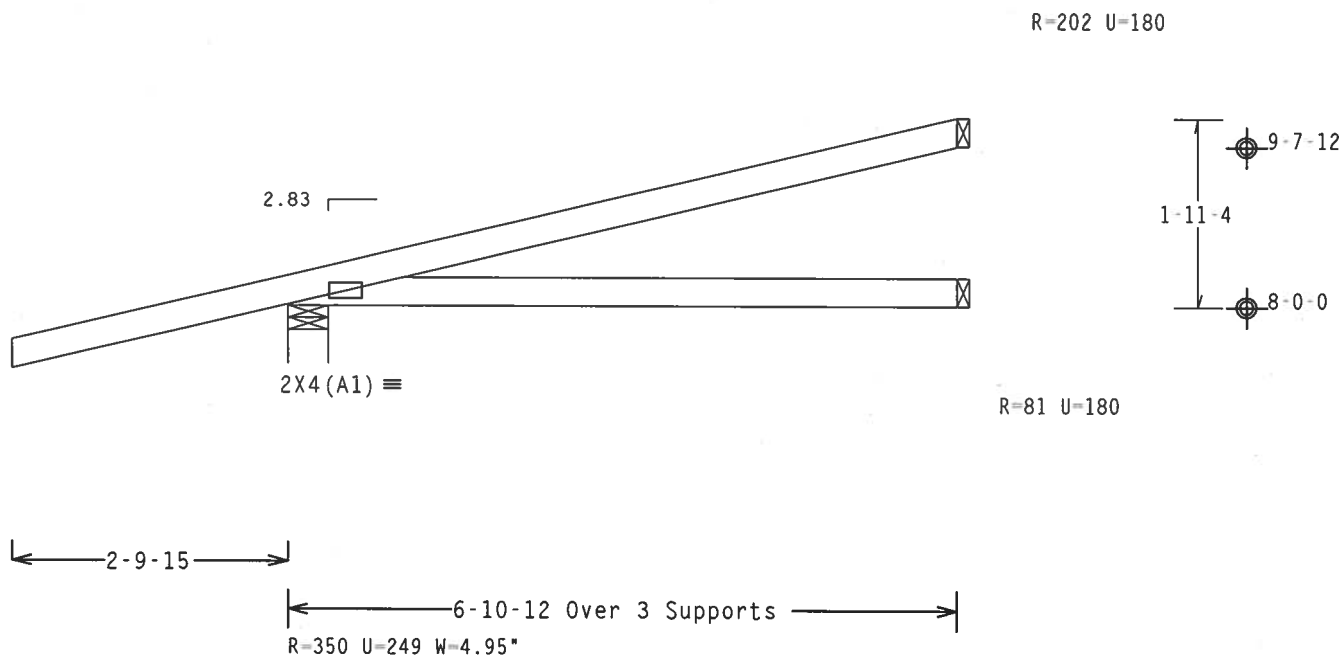

Design Crit: TPI-2002(STD)/FBC

PLT TYP. Wave Cq/RT=1.00(1.25)/10(0) 7.25.0503 [illegible] QTY:2 FL/-/5/-/-/R/- Scale =.5"/Ft.

ALPINE
Alpine Engineered Products, Inc.
1950 Marley Drive
Haines City, FL 33844
FL Certificate of Authorization # 567

WARNING TRUSSES REQUIRE EXTREME CARE IN FABRICATION, HANDLING, SHIPPING, INSTALLING AND BRACING. REFER TO BCSI 1-03 (BUILDING COMPONENT SAFETY INFORMATION), PUBLISHED BY TPI (TRUSS PLATE INSTITUTE, 583 D'ONOFRIO DR., SUITE 200, MADISON, WI 53719) AND WTCA (WOOD TRUSS COUNCIL OF AMERICA, 6300 ENTERPRISE LN, MADISON, WI 53719) FOR SAFETY PRACTICES PRIOR TO PERFORMING THESE FUNCTIONS. UNLESS OTHERWISE INDICATED, TOP CHORD SHALL HAVE PROPERLY ATTACHED STRUCTURAL PANELS AND BOTTOM CHORD SHALL HAVE A PROPERLY ATTACHED RIGID CEILING.

IMPORTANT FURNISH A COPY OF THIS DESIGN TO THE INSTALLATION CONTRACTOR. ALPINE ENGINEERED PRODUCTS, INC. SHALL NOT BE RESPONSIBLE FOR ANY DEVIATION FROM THIS DESIGN; ANY FAILURE TO BUILD THE TRUSS IN CONFORMANCE WITH TPI; OR FABRICATING, HANDLING, SHIPPING, INSTALLING & BRACING OF TRUSSES. DESIGN CONFORMS WITH APPLICABLE PROVISIONS OF NDS (NATIONAL DESIGN SPEC, BY AF&PA) AND TPI. ALPINE CONNECTOR PLATES ARE MADE OF 20/18/16GA (W,H/S/K) ASTM A653 GRADE 40/60 (W, K/H,S) GALV. STEEL. APPLY PLATES TO EACH FACE OF TRUSS AND, UNLESS OTHERWISE LOCATED ON THIS DESIGN, POSITION PER DRAWINGS 160A-Z. ANY INSPECTION OF PLATES FOLLOWED BY (1) SHALL BE PER ANNEX A3 OF TPI1-2002 SEC.3. A SEAL ON THIS DRAWING INDICATES ACCEPTANCE OF PROFESSIONAL ENGINEERING RESPONSIBILITY SOLELY FOR THE TRUSS COMPONENT DESIGN SHOWN. THE SUITABILITY AND USE OF THIS COMPONENT FOR ANY BUILDING IS THE RESPONSIBILITY OF THE BUILDING DESIGNER PER ANSI/TPI 1 SEC. 2.

JAMES F. COLLINS LICENSE No. 52212 STATE OF FLORIDA PROFESSIONAL ENGINEER
Oct 17, 06

TC LL	20.0 PSF	REF R215-- 46946
TC DL	10.0 PSF	DATE 10/16/06
BC DL	10.0 PSF	DRW HCUSR215 06289287
BC LL	0.0 PSF	HC-ENG DAB/AP
TOT.LD.	40.0 PSF	SEQN- 36139
DUR.FAC.	1.25	FROM CAW
SPACING	24.0"	JREF- 1T1I215_Z07

Top chord 2x4 SP #2 N
Bot chord 2x4 SP #2 N
Webs 2x4 SP #2 N

110 mph wind, 15.00 ft mean hgt, ASCE 7-02, CLOSED bldg, not located within 4.50 ft from roof edge, CAT II, EXP B, wind TC DL=5.0 psf, wind BC DL=5.0 psf.

Wind reactions based on MWFRS pressures.

Deflection meets L/240 live and L/180 total load.

Top chord overhangs have been checked only for loads as indicates. Overhangs not checked for man loads or long-term deflection.

SPECIAL LOADS
------(LUMBER DUR.FAC.=1.25 / PLATE DUR.FAC.=1.25)

TC -	From	61 PLF	at -2.83	to	61 PLF	at	9.90
BC -	From	4 PLF	at -2.83	to	4 PLF	at	0.00
BC -	From	20 PLF	at 0.00	to	20 PLF	at	9.90
TC -		194 LB Conc. Load	at	1.48			
TC -		97 LB Conc. Load	at	4.31			
TC -		234 LB Conc. Load	at	7.13			
BC -		89 LB Conc. Load	at	1.48			
BC -		29 LB Conc. Load	at	4.31			
BC -		98 LB Conc. Load	at	7.13			

Plates sized for a minimum of 3.00 sq.in./piece.

The overall height of this truss excluding overhang is 2-7-12.

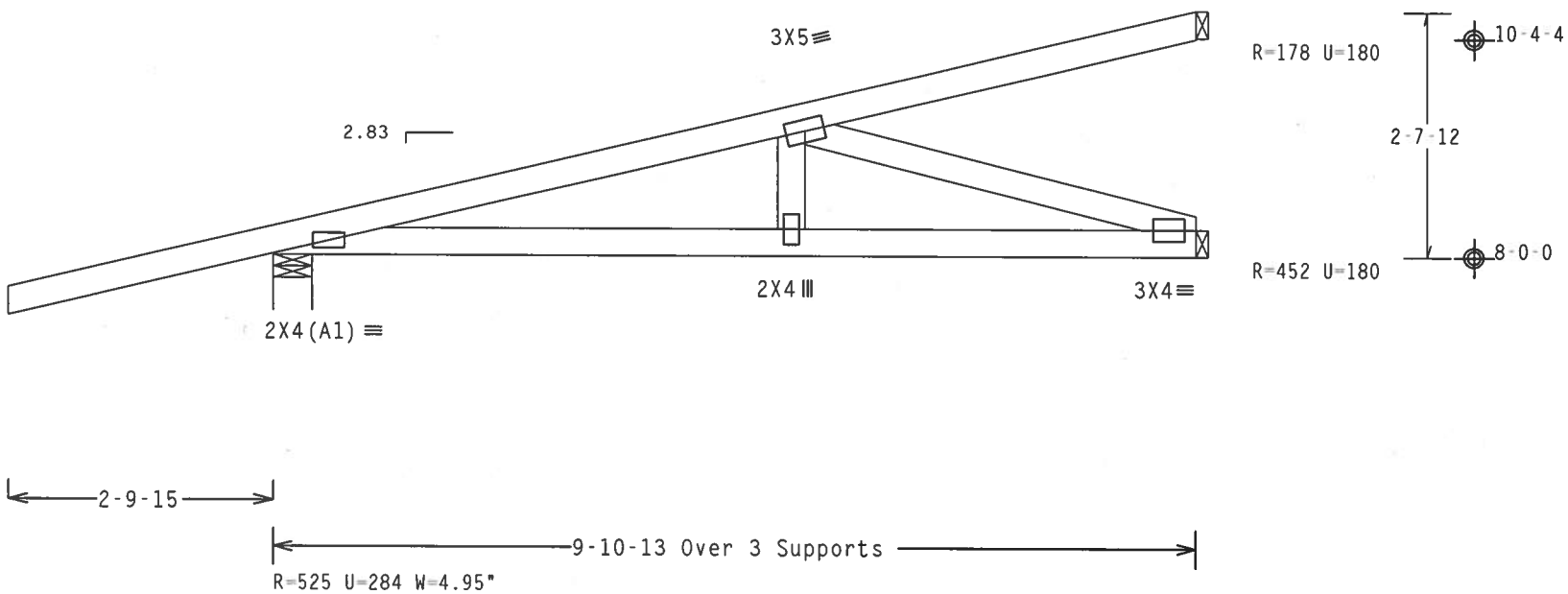

Design Crit: TPI-2002(STD)/FBC

PLT TYP. Wave Cq/RT=1.00(1.25)/10(0) 7.25.0503 [illegible] QTY:2 FL/-/5/-/-/R/- Scale =.5"/Ft.

ALPINE
Alpine Engineered Products, Inc.
1950 Marley Drive
Haines City, FL 33844
FL Certificate of Authorization # 567

WARNING TRUSSES REQUIRE EXTREME CARE IN FABRICATION, HANDLING, SHIPPING, INSTALLING AND BRACING. REFER TO BCSI 1-03 (BUILDING COMPONENT SAFETY INFORMATION), PUBLISHED BY TPI (TRUSS PLATE INSTITUTE, 583 D'ONOFRIO DR., SUITE 200, MADISON, WI 53719) AND WTCA (WOOD TRUSS COUNCIL OF AMERICA, 6300 ENTERPRISE LN, MADISON, WI 53719) FOR SAFETY PRACTICES PRIOR TO PERFORMING THESE FUNCTIONS. UNLESS OTHERWISE INDICATED, TOP CHORD SHALL HAVE PROPERLY ATTACHED STRUCTURAL PANELS AND BOTTOM CHORD SHALL HAVE A PROPERLY ATTACHED RIGID CEILING.

IMPORTANTFURNISH A COPY OF THIS DESIGN TO THE INSTALLATION CONTRACTOR. ALPINE ENGINEERED PRODUCTS, INC. SHALL NOT BE RESPONSIBLE FOR ANY DEVIATION FROM THIS DESIGN; ANY FAILURE TO BUILD THE TRUSS IN CONFORMANCE WITH TPI; OR FABRICATING, HANDLING, SHIPPING, INSTALLING & BRACING OF TRUSSES. DESIGN CONFORMS WITH APPLICABLE PROVISIONS OF NDS (NATIONAL DESIGN SPEC. BY AF&PA) AND TPI. ALPINE CONNECTOR PLATES ARE MADE OF 20/18/16GA (W.H/S/K) ASTM A653 GRADE 40/60 (W. K/H.S) GALV. STEEL. APPLY PLATES TO EACH FACE OF TRUSS AND, UNLESS OTHERWISE LOCATED ON THIS DESIGN, POSITION PER DRAWINGS 160A-Z. ANY INSPECTION OF PLATES FOLLOWED BY (I) SHALL BE PER ANNEX A3 OF TPI1-2002 SEC.3. A SEAL ON THIS DRAWING INDICATES ACCEPTANCE OF PROFESSIONAL ENGINEERING RESPONSIBILITY SOLELY FOR THE TRUSS COMPONENT DESIGN SHOWN. THE SUITABILITY AND USE OF THIS COMPONENT FOR ANY BUILDING IS THE RESPONSIBILITY OF THE BUILDING DESIGNER PER ANSI/TPI 1 SEC. 2.

JAMES F. COLLINS JR. LICENSE No. 52212 STATE OF FLORIDA PROFESSIONAL ENGINEER

Oct 1[illegible]

TC LL	20.0 PSF	REF R215-- 46947
TC DL	10.0 PSF	DATE 10/16/06
BC DL	10.0 PSF	DRW HCUSR215 06289317
BC LL	0.0 PSF	HC-ENG DAB/AP
TOT.LD.	40.0 PSF	SEQN- 36143
DUR.FAC.	1.25	FROM CAW
SPACING	24.0"	JREF- 1T1I215_Z07

THIS DWG PREPARED FROM COMPUTER INPUT (LOADS & DIMENSIONS) SUBMITTED BY TRUSS MFR.

Top chord 2x4 SP #2 N
Bot chord 2x4 SP #2 N
Webs 2x4 SP #2 N
:Rt Slider 2x4 SP #2 N: BLOCK LENGTH = 3.694'

(A) Continuous lateral bracing equally spaced on member.

Plates sized for a minimum of 3.00 sq.in./piece.

NOTE:
TRUSS MAY EXHIBIT UNDESIREABLE DEFLECTION
UNDER FULL DESIGN LOAD, AS THE LONG TERM EFFECTS
OF CREEP HAVE NOT BEEN CONSIDERED FOR THIS DESIGN.

110 mph wind, 15.00 ft mean hgt, ASCE 7-02, CLOSED bldg, not located within 4.50 ft from roof edge, CAT II, EXP B, wind TC DL=5.0 psf, wind BC DL=5.0 psf.

Wind reactions based on MWFRS pressures.

Deflection meets L/240 live and L/180 total load.

The overall height of this truss excluding overhang is 6-3-15.

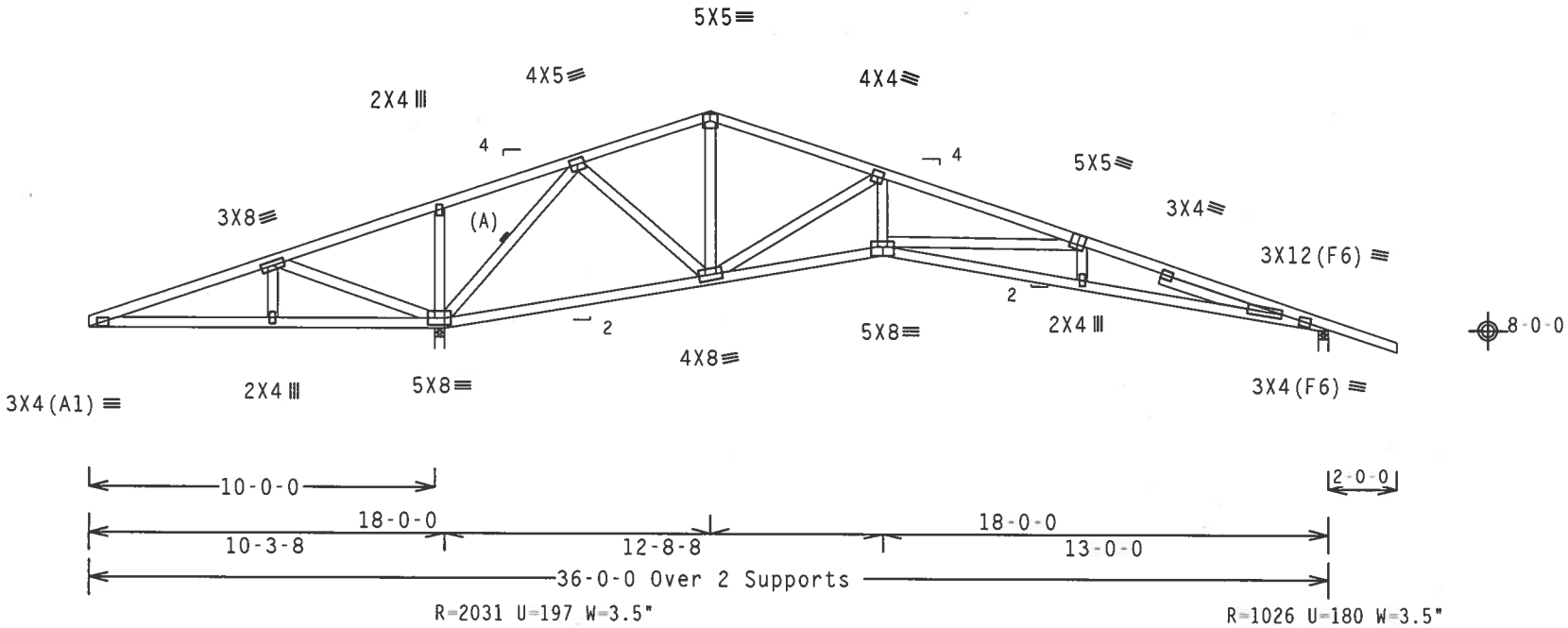

Design Crit: TPI-2002(STD)/FBC

PLT TYP. Wave Cq/RT=1.00(1.25)/10(0) 7.25.0503.00 QTY:1 FL/-/5/-/-/R/- Scale =.1875"/Ft.

ALPINE
Alpine Engineered Products, Inc.
1950 Marley Drive
Haines City, FL 33844
FL Certificate of Authorization # 567

WARNING TRUSSES REQUIRE EXTREME CARE IN FABRICATION, HANDLING, SHIPPING, INSTALLING AND BRACING. REFER TO BCSI 1-03 (BUILDING COMPONENT SAFETY INFORMATION), PUBLISHED BY TPI (TRUSS PLATE INSTITUTE, 583 D'ONOFRIO DR., SUITE 200, MADISON, WI 53719) AND WTCA (WOOD TRUSS COUNCIL OF AMERICA, 6300 ENTERPRISE LN, MADISON, WI 53719) FOR SAFETY PRACTICES PRIOR TO PERFORMING THESE FUNCTIONS. UNLESS OTHERWISE INDICATED, TOP CHORD SHALL HAVE PROPERLY ATTACHED STRUCTURAL PANELS AND BOTTOM CHORD SHALL HAVE A PROPERLY ATTACHED RIGID CEILING.

IMPORTANTFURNISH A COPY OF THIS DESIGN TO THE INSTALLATION CONTRACTOR. ALPINE ENGINEERED PRODUCTS, INC. SHALL NOT BE RESPONSIBLE FOR ANY DEVIATION FROM THIS DESIGN; ANY FAILURE TO BUILD THE TRUSS IN CONFORMANCE WITH TPI; OR FABRICATING, HANDLING, SHIPPING, INSTALLING & BRACING OF TRUSSES. DESIGN CONFORMS WITH APPLICABLE PROVISIONS OF NDS (NATIONAL DESIGN SPEC. BY AF&PA) AND TPI. ALPINE CONNECTOR PLATES ARE MADE OF 20/18/16GA (W.H/S/K) ASTM A653 GRADE 40/60 (W. K/H,S) GALV. STEEL. APPLY PLATES TO EACH FACE OF TRUSS AND, UNLESS OTHERWISE LOCATED ON THIS DESIGN, POSITION PER DRAWINGS 160A-Z. ANY INSPECTION OF PLATES FOLLOWED BY (1) SHALL BE PER ANNEX A3 OF TPI1-2002 SEC.3. A SEAL ON THIS DRAWING INDICATES ACCEPTANCE OF PROFESSIONAL ENGINEERING RESPONSIBILITY SOLELY FOR THE TRUSS COMPONENT DESIGN SHOWN. THE SUITABILITY AND USE OF THIS COMPONENT FOR ANY BUILDING IS THE RESPONSIBILITY OF THE BUILDING DESIGNER PER ANSI/TPI 1 SEC. 2.

JAMES F. COLLINS, JR. LICENSED No. 52212 STATE OF FLORIDA PROFESSIONAL ENGINEER
Oct

TC LL	20.0 PSF	REF R215-- 46948
TC DL	10.0 PSF	DATE 10/16/06
BC DL	10.0 PSF	DRW HCUSR215 06289291
BC LL	0.0 PSF	HC-ENG RA/AP
TOT.LD.	40.0 PSF	SEQN- 29306
DUR.FAC.	1.25	FROM CAW
SPACING	24.0"	JREF- 1T1I215_Z07

THIS DWG PREPARED FROM COMPUTER INPUT (LOADS & DIMENSIONS) SUBMITTED BY TRUSS MFR.

Top chord 2x4 SP #2 N
Bot chord 2x4 SP #2 N
Webs 2x4 SP #2 N

Wind reactions based on MWFRS pressures.

Deflection meets L/240 live and L/180 total load.

Shim all supports to solid bearing.

110 mph wind, 15.00 ft mean hgt, ASCE 7-02, CLOSED bldg, not located within 4.50 ft from roof edge, CAT II, EXP B, wind TC DL=5.0 psf, wind BC DL=5.0 psf.

(A) Continuous lateral bracing equally spaced on member.

Plates sized for a minimum of 3.00 sq.in./piece.

The overall height of this truss excluding overhang is 6-3-15.

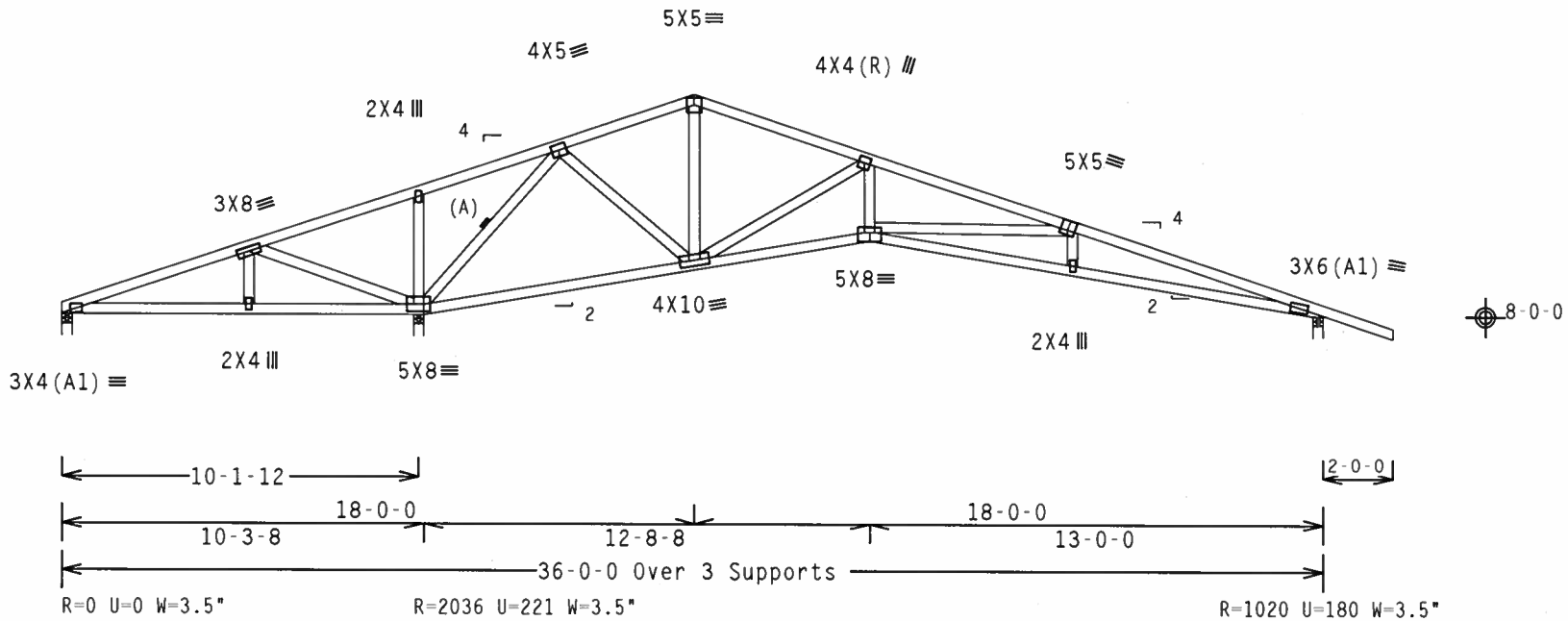

Design Crit: TPI-2002(STD)/FBC

PLT TYP. Wave — Cq/RT=1.00(1.25)/10(0) 7.25.0503.00 — QTY:1 — FL/-/5/-/-/R/- — Scale =.1875"/Ft.

ALPINE

Alpine Engineered Products, Inc.
1950 Marley Drive
Haines City, FL 33844
FL Certificate of Authorization # 567

WARNING TRUSSES REQUIRE EXTREME CARE IN FABRICATION, HANDLING, SHIPPING, INSTALLING AND BRACING. REFER TO BCSI 1-03 (BUILDING COMPONENT SAFETY INFORMATION), PUBLISHED BY TPI (TRUSS PLATE INSTITUTE, 583 D'ONOFRIO DR., SUITE 200, MADISON, WI 53719) AND WTCA (WOOD TRUSS COUNCIL OF AMERICA, 6300 ENTERPRISE LN, MADISON, WI 53719) FOR SAFETY PRACTICES PRIOR TO PERFORMING THESE FUNCTIONS. UNLESS OTHERWISE INDICATED, TOP CHORD SHALL HAVE PROPERLY ATTACHED STRUCTURAL PANELS AND BOTTOM CHORD SHALL HAVE A PROPERLY ATTACHED RIGID CEILING.

IMPORTANTFURNISH A COPY OF THIS DESIGN TO THE INSTALLATION CONTRACTOR. ALPINE ENGINEERED PRODUCTS, INC. SHALL NOT BE RESPONSIBLE FOR ANY DEVIATION FROM THIS DESIGN; ANY FAILURE TO BUILD THE TRUSS IN CONFORMANCE WITH TPI; OR FABRICATING, HANDLING, SHIPPING, INSTALLING & BRACING OF TRUSSES. DESIGN CONFORMS WITH APPLICABLE PROVISIONS OF NDS (NATIONAL DESIGN SPEC. BY AF&PA) AND TPI. ALPINE CONNECTOR PLATES ARE MADE OF 20/18/16GA (W,H/S/K) ASTM A653 GRADE 40/60 (W, K/H,S) GALV. STEEL. APPLY PLATES TO EACH FACE OF TRUSS AND. UNLESS OTHERWISE LOCATED ON THIS DESIGN, POSITION PER DRAWINGS 160A-Z. ANY INSPECTION OF PLATES FOLLOWED BY (1) SHALL BE PER ANNEX A3 OF TPI1-2002 SEC.3. A SEAL ON THIS DRAWING INDICATES ACCEPTANCE OF PROFESSIONAL ENGINEERING RESPONSIBILITY SOLELY FOR THE TRUSS COMPONENT DESIGN SHOWN. THE SUITABILITY AND USE OF THIS COMPONENT FOR ANY BUILDING IS THE RESPONSIBILITY OF THE BUILDING DESIGNER PER ANSI/TPI 1 SEC. 2.

JAMES F. COLLINS, JR. LICENSE No. 52212 STATE OF FLORIDA PROFESSIONAL ENGINEER

Oct

TC LL	20.0	PSF
TC DL	10.0	PSF
BC DL	10.0	PSF
BC LL	0.0	PSF
TOT.LD.	40.0	PSF
DUR.FAC.	1.25	
SPACING	24.0"	

REF	R215-- 46949
DATE	10/16/06
DRW	HCUSR215 06289295
HC-ENG	DAB/AP
SEQN-	29314
FROM	CAW
JREF-	1T1I215_Z07

THIS DWG PREPARED FROM COMPUTER INPUT (LOADS & DIMENSIONS) SUBMITTED BY TRUSS MFR.

Top chord 2x4 SP #2 N
Bot chord 2x4 SP #2 N
Webs 2x4 SP #2 N

Wind reactions based on MWFRS pressures.

Deflection meets L/240 live and L/180 total load.

Shim all supports to solid bearing.

110 mph wind, 15.00 ft mean hgt, ASCE 7-02, CLOSED bldg, not located within 4.50 ft from roof edge, CAT II, EXP B, wind TC DL=5.0 psf, wind BC DL=5.0 psf.

(A) Continuous lateral bracing equally spaced on member.

Plates sized for a minimum of 3.00 sq.in./piece.

The overall height of this truss excluding overhang is 6-3-15.

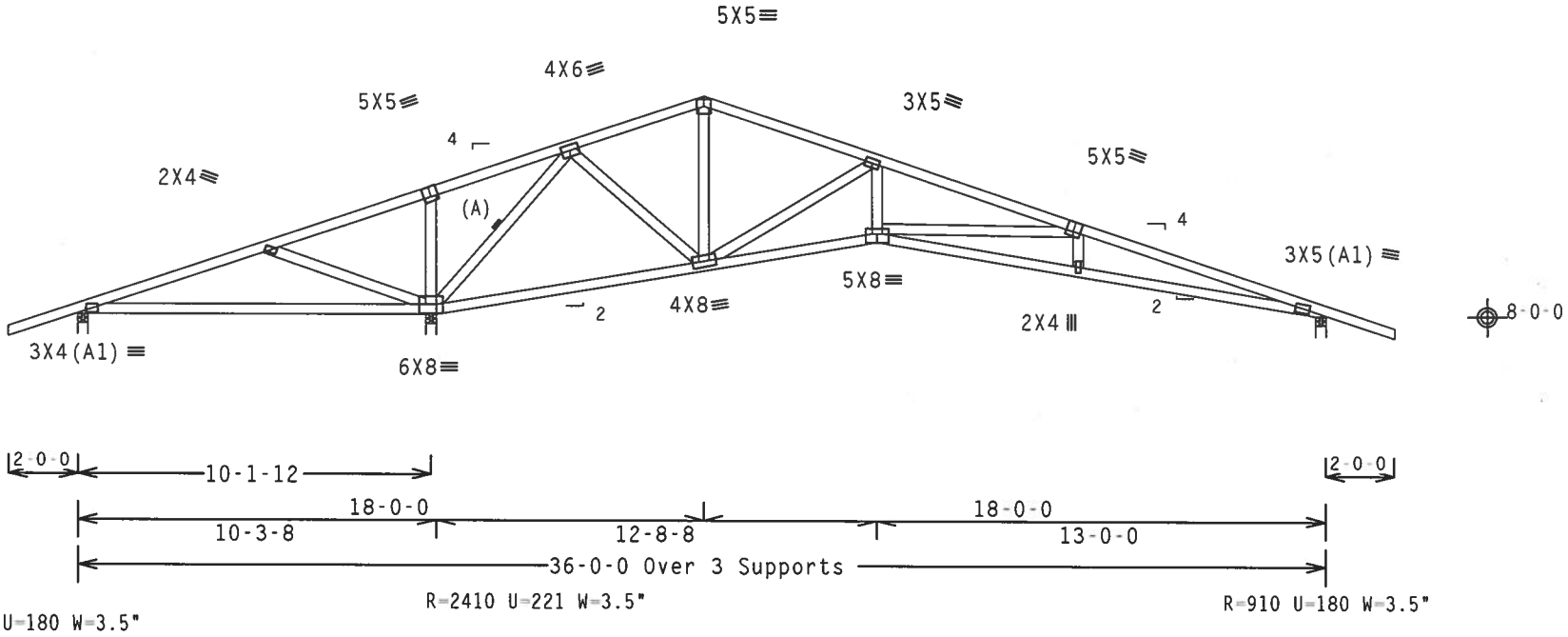

Design Crit: TPI-2002(STD)/FBC

PLT TYP. Wave | Cq/RT=1.00(1.25)/10(0) 7.25.0503 | QTY:4 | FL/-/5/-/-/R/- | Scale =.1875"/Ft.

ALPINE
Alpine Engineered Products, Inc.
1950 Marley Drive
Haines City, FL 33844
FL Certificate of Authorization # 567

WARNING TRUSSES REQUIRE EXTREME CARE IN FABRICATION, HANDLING, SHIPPING, INSTALLING AND BRACING. REFER TO BCSI 1-03 (BUILDING COMPONENT SAFETY INFORMATION), PUBLISHED BY TPI (TRUSS PLATE INSTITUTE, 583 D'ONOFRIO DR., SUITE 200, MADISON, WI 53719) AND WTCA (WOOD TRUSS COUNCIL OF AMERICA, 6300 ENTERPRISE LN, MADISON, WI 53719) FOR SAFETY PRACTICES PRIOR TO PERFORMING THESE FUNCTIONS. UNLESS OTHERWISE INDICATED, TOP CHORD SHALL HAVE PROPERLY ATTACHED STRUCTURAL PANELS AND BOTTOM CHORD SHALL HAVE A PROPERLY ATTACHED RIGID CEILING.

IMPORTANTFURNISH A COPY OF THIS DESIGN TO THE INSTALLATION CONTRACTOR. ALPINE ENGINEERED PRODUCTS, INC. SHALL NOT BE RESPONSIBLE FOR ANY DEVIATION FROM THIS DESIGN; ANY FAILURE TO BUILD THE TRUSS IN CONFORMANCE WITH TPI; OR FABRICATING, HANDLING, SHIPPING, INSTALLING & BRACING OF TRUSSES. DESIGN CONFORMS WITH APPLICABLE PROVISIONS OF NDS (NATIONAL DESIGN SPEC. BY AF&PA) AND TPI. ALPINE CONNECTOR PLATES ARE MADE OF 20/18/16GA (W.H/S/K) ASTM A653 GRADE 40/60 (W. K/H.S) GALV. STEEL. APPLY PLATES TO EACH FACE OF TRUSS AND, UNLESS OTHERWISE LOCATED ON THIS DESIGN, POSITION PER DRAWINGS 160A-Z. ANY INSPECTION OF PLATES FOLLOWED BY (1) SHALL BE PER ANNEX A3 OF TPI1-2002 SEC.3. A SEAL ON THIS DRAWING INDICATES ACCEPTANCE OF PROFESSIONAL ENGINEERING RESPONSIBILITY SOLELY FOR THE TRUSS COMPONENT DESIGN SHOWN. THE SUITABILITY AND USE OF THIS COMPONENT FOR ANY BUILDING IS THE RESPONSIBILITY OF THE BUILDING DESIGNER PER ANSI/TPI 1 SEC. 2.

JAMES F. COLLINS, JR. LICENSE No. 52212 STATE OF FLORIDA PROFESSIONAL ENGINEER
Oct 17, 06

TC LL	20.0 PSF	REF R215-- 46950
TC DL	10.0 PSF	DATE 10/16/06
BC DL	10.0 PSF	DRW HCUSR215 06289300
BC LL	0.0 PSF	HC-ENG DAB/AP
TOT.LD.	40.0 PSF	SEQN- 29267
DUR.FAC.	1.25	FROM CAW
SPACING	24.0"	JREF- 1T1I215_Z07

THIS DWG PREPARED FROM COMPUTER INPUT (LOADS & DIMENSIONS) SUBMITTED BY TRUSS MFR.

Top chord 2x4 SP #2 N
Bot chord 2x4 SP #2 N
Webs 2x4 SP #2 N

Wind reactions based on MWFRS pressures.

Deflection meets L/240 live and L/180 total load.

Shim all supports to solid bearing.

110 mph wind, 15.00 ft mean hgt, ASCE 7-02, CLOSED bldg, not located within 4.50 ft from roof edge, CAT II, EXP B, wind TC DL=5.0 psf, wind BC DL=5.0 psf.

In lieu of structural panels use purlins to brace all flat TC @ 24" OC.

Plates sized for a minimum of 3.00 sq.in./piece.

The overall height of this truss excluding overhang is 5-11-15.

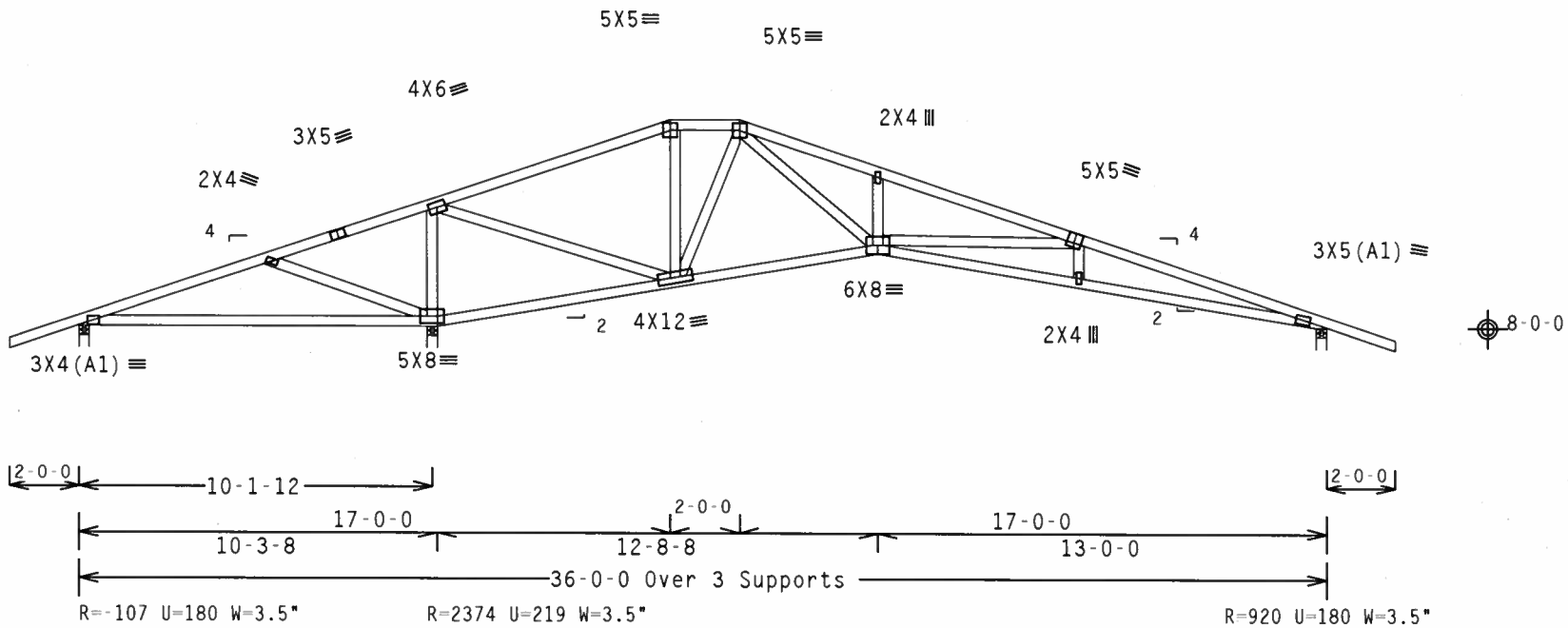

Design Crit: TPI-2002(STD)/FBC

PLT TYP. Wave — Cq/RT=1.00(1.25)/10(0) 7.25.0503.0 — QTY:1 — FL/-/5/-/-/R/- — Scale =.1875"/Ft.

ALPINE
Alpine Engineered Products, Inc.
1950 Marley Drive
Haines City, FL 33844
FL Certificate of Authorization # 567

WARNING TRUSSES REQUIRE EXTREME CARE IN FABRICATION, HANDLING, SHIPPING, INSTALLING AND BRACING. REFER TO BCSI 1-03 (BUILDING COMPONENT SAFETY INFORMATION), PUBLISHED BY TPI (TRUSS PLATE INSTITUTE, 583 D'ONOFRIO DR., SUITE 200, MADISON, WI 53719) AND WTCA (WOOD TRUSS COUNCIL OF AMERICA, 6300 ENTERPRISE LN, MADISON, WI 53719) FOR SAFETY PRACTICES PRIOR TO PERFORMING THESE FUNCTIONS. UNLESS OTHERWISE INDICATED, TOP CHORD SHALL HAVE PROPERLY ATTACHED STRUCTURAL PANELS AND BOTTOM CHORD SHALL HAVE A PROPERLY ATTACHED RIGID CEILING.

IMPORTANTFURNISH A COPY OF THIS DESIGN TO THE INSTALLATION CONTRACTOR. ALPINE ENGINEERED PRODUCTS, INC. SHALL NOT BE RESPONSIBLE FOR ANY DEVIATION FROM THIS DESIGN; ANY FAILURE TO BUILD THE TRUSS IN CONFORMANCE WITH TPI; OR FABRICATING, HANDLING, SHIPPING, INSTALLING & BRACING OF TRUSSES DESIGN CONFORMS WITH APPLICABLE PROVISIONS OF NDS (NATIONAL DESIGN SPEC, BY AF&PA) AND TPI. ALPINE CONNECTOR PLATES ARE MADE OF 20/18/16GA (W,H/S/K) ASTM A653 GRADE 40/60 (W, K/H,S) GALV. STEEL. APPLY PLATES TO EACH FACE OF TRUSS AND, UNLESS OTHERWISE LOCATED ON THIS DESIGN, POSITION PER DRAWINGS 160A-Z. ANY INSPECTION OF PLATES FOLLOWED BY (1) SHALL BE PER ANNEX A3 OF TPI1-2002 SEC.3. A SEAL ON THIS DRAWING INDICATES ACCEPTANCE OF PROFESSIONAL ENGINEERING RESPONSIBILITY SOLELY FOR THE TRUSS COMPONENT DESIGN SHOWN. THE SUITABILITY AND USE OF THIS COMPONENT FOR ANY BUILDING IS THE RESPONSIBILITY OF THE BUILDING DESIGNER PER ANSI/TPI 1 SEC. 2.

JAMES F. COLLINS JR. LICENSE No. 52212 STATE OF FLORIDA PROFESSIONAL ENGINEER

TC LL	20.0 PSF	REF R215-- 46951
TC DL	10.0 PSF	DATE 10/16/06
BC DL	10.0 PSF	DRW HCUSR215 06289301
BC LL	0.0 PSF	HC-ENG DAB/AP
TOT.LD.	40.0 PSF	SEQN- 29269
DUR.FAC.	1.25	FROM CAW
SPACING	24.0"	JREF- 1T1I215_Z07

Top chord 2x4 SP #2 N
Bot chord 2x4 SP #2 N
Webs 2x4 SP #2 N

Wind reactions based on MWFRS pressures.

In lieu of structural panels use purlins to brace all flat TC @ 24" OC.

Plates sized for a minimum of 3.00 sq.in./piece.

The overall height of this truss excluding overhang is 5-3-15.

110 mph wind, 15.00 ft mean hgt, ASCE 7-02, CLOSED bldg, not located within 4.50 ft from roof edge, CAT II, EXP B, wind TC DL=5.0 psf, wind BC DL=5.0 psf.

(A) 1x4 SP #3 or better "T" brace. 80% length of web member. Attach with 8d Box or Gun (0.113"x2.5",min.)nails @ 6" OC.

Deflection meets L/240 live and L/180 total load.

Shim all supports to solid bearing.

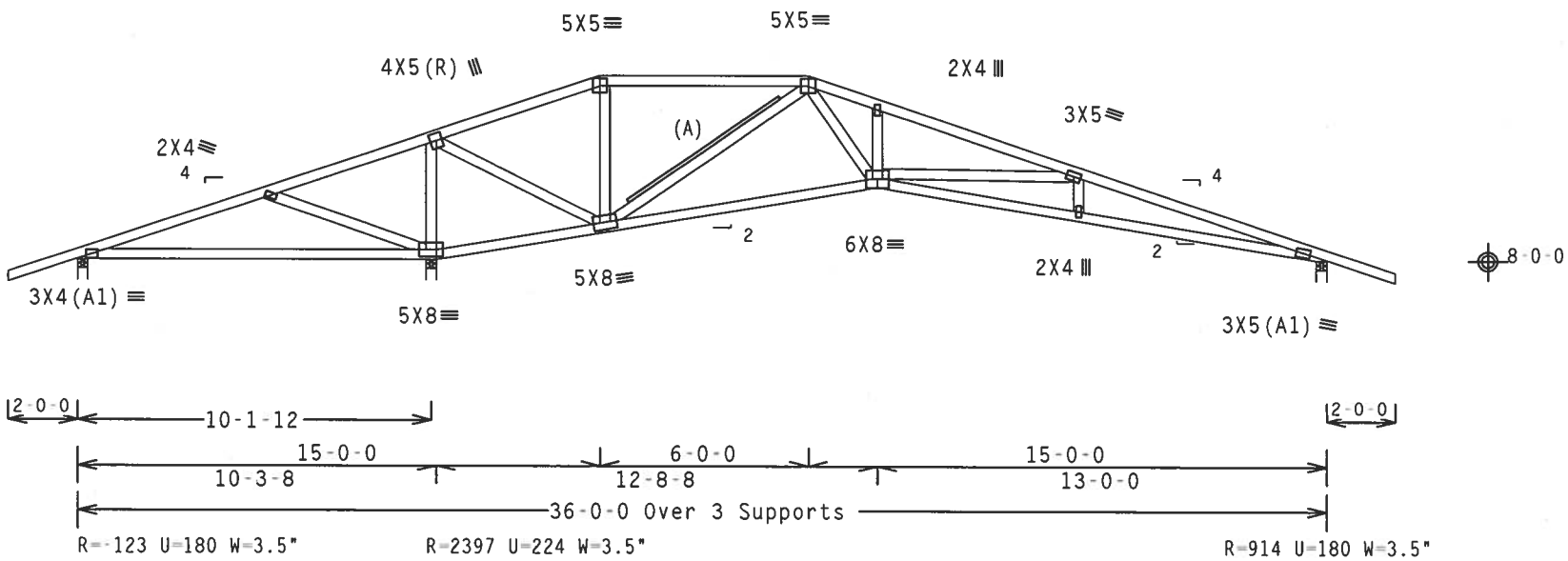

Design Crit: TPI-2002(STD)/FBC

PLT TYP. Wave Cq/RT=1.00(1.25)/10(0) 7.25.0503.0 QTY:1 FL/-/5/-/-/R/- Scale =.1875"/Ft.

ALPINE
Alpine Engineered Products, Inc.
1950 Marley Drive
Haines City, FL 33844
FL Certificate of Authorization # 567

WARNING TRUSSES REQUIRE EXTREME CARE IN FABRICATION, HANDLING, SHIPPING, INSTALLING AND BRACING. REFER TO BCSI 1-03 (BUILDING COMPONENT SAFETY INFORMATION), PUBLISHED BY TPI (TRUSS PLATE INSTITUTE, 583 D'ONOFRIO DR., SUITE 200, MADISON, WI 53719) AND WTCA (WOOD TRUSS COUNCIL OF AMERICA, 6300 ENTERPRISE LN, MADISON, WI 53719) FOR SAFETY PRACTICES PRIOR TO PERFORMING THESE FUNCTIONS. UNLESS OTHERWISE INDICATED, TOP CHORD SHALL HAVE PROPERLY ATTACHED STRUCTURAL PANELS AND BOTTOM CHORD SHALL HAVE A PROPERLY ATTACHED RIGID CEILING.

IMPORTANTFURNISH A COPY OF THIS DESIGN TO THE INSTALLATION CONTRACTOR. ALPINE ENGINEERED PRODUCTS, INC. SHALL NOT BE RESPONSIBLE FOR ANY DEVIATION FROM THIS DESIGN; ANY FAILURE TO BUILD THE TRUSS IN CONFORMANCE WITH TPI; OR FABRICATING, HANDLING, SHIPPING, INSTALLING & BRACING OF TRUSSES. DESIGN CONFORMS WITH APPLICABLE PROVISIONS OF NDS (NATIONAL DESIGN SPEC. BY AF&PA) AND TPI. ALPINE CONNECTOR PLATES ARE MADE OF 20/18/16GA (W,H/S/K) ASTM A653 GRADE 40/60 (W, K/H,S) GALV. STEEL. APPLY PLATES TO EACH FACE OF TRUSS AND, UNLESS OTHERWISE LOCATED ON THIS DESIGN, POSITION PER DRAWINGS 160A-Z. ANY INSPECTION OF PLATES FOLLOWED BY (I) SHALL BE PER ANNEX A3 OF TPI1-2002 SEC.3. A SEAL ON THIS DRAWING INDICATES ACCEPTANCE OF PROFESSIONAL ENGINEERING RESPONSIBILITY SOLELY FOR THE TRUSS COMPONENT DESIGN SHOWN. THE SUITABILITY AND USE OF THIS COMPONENT FOR ANY BUILDING IS THE RESPONSIBILITY OF THE BUILDING DESIGNER PER ANSI/TPI 1 SEC. 2.

JAMES F. COLLINS, JR. LICENSE No. 52212 STATE OF FLORIDA PROFESSIONAL ENGINEER
Oct 17, 06

TC LL	20.0 PSF	REF	R215-- 46952
TC DL	10.0 PSF	DATE	10/16/06
BC DL	10.0 PSF	DRW	HCUSR215 06289303
BC LL	0.0 PSF	HC-ENG	DAB/AP
TOT.LD.	40.0 PSF	SEQN-	29271
DUR.FAC.	1.25	FROM	CAW
SPACING	24.0"	JREF-	1T1I215_Z07

(3945-/NORTHRUP RESIDENCE /OWNER BUILDER -- , ** - C9)

THIS DWG PREPARED FROM COMPUTER INPUT (LOADS & DIMENSIONS) SUBMITTED BY TRUSS MFR.

Top chord 2x4 SP #2 N :T1 2x4 SP SS:
Bot chord 2x4 SP #2 N
Webs 2x4 SP #2 N

Wind reactions based on MWFRS pressures.

(A) 1x4 SP #3 or better "T" brace. 80% length of web member. Attach with 8d Box or Gun (0.113"x2.5",min.)nails @ 6" OC.

Deflection meets L/240 live and L/180 total load.

Shim all supports to solid bearing.

** Negative reaction(s) of -195# MAX. (See below) from a non-wind load case requires uplift connection.

110 mph wind, 15.00 ft mean hgt, ASCE 7-02, CLOSED bldg, not located within 4.50 ft from roof edge, CAT II, EXP B, wind TC DL=5.0 psf, wind BC DL=5.0 psf.

In lieu of structural panels use purlins to brace all flat TC @ 24" OC.

Plates sized for a minimum of 3.00 sq.in./piece.

The overall height of this truss excluding overhang is 4-7-15.

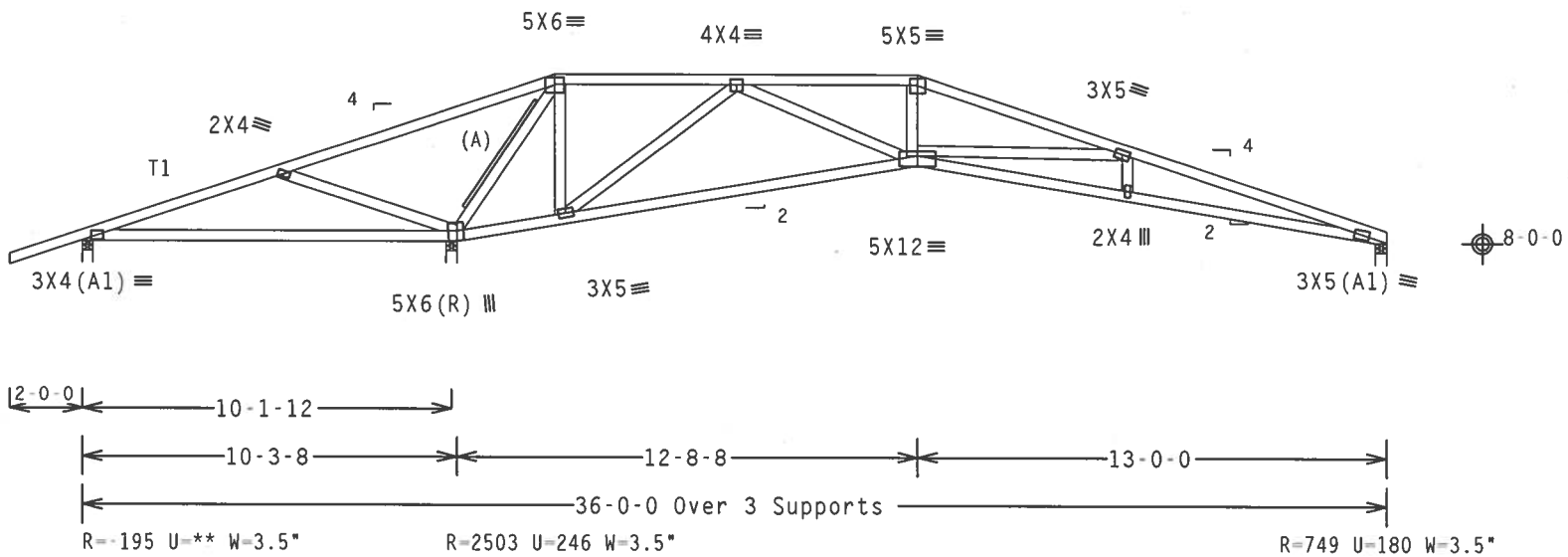

Design Crit: TPI-2002(STD)/FBC

PLT TYP. Wave Cq/RT=1.00(1.25)/10(0) 7.25.0503.00 QTY:1 FL/-/5/-/-/R/- Scale =.1875"/Ft.

ALPINE
Alpine Engineered Products, Inc.
1950 Marley Drive
Haines City, FL 33844
FL Certificate of Authorization # 567

WARNING TRUSSES REQUIRE EXTREME CARE IN FABRICATION, HANDLING, SHIPPING, INSTALLING AND BRACING. REFER TO BCSI 1-03 (BUILDING COMPONENT SAFETY INFORMATION), PUBLISHED BY TPI (TRUSS PLATE INSTITUTE, 583 D'ONOFRIO DR., SUITE 200, MADISON, WI 53719) AND WTCA (WOOD TRUSS COUNCIL OF AMERICA, 6300 ENTERPRISE LN, MADISON, WI 53719) FOR SAFETY PRACTICES PRIOR TO PERFORMING THESE FUNCTIONS. UNLESS OTHERWISE INDICATED, TOP CHORD SHALL HAVE PROPERLY ATTACHED STRUCTURAL PANELS AND BOTTOM CHORD SHALL HAVE A PROPERLY ATTACHED RIGID CEILING.

IMPORTANT FURNISH A COPY OF THIS DESIGN TO THE INSTALLATION CONTRACTOR. ALPINE ENGINEERED PRODUCTS, INC. SHALL NOT BE RESPONSIBLE FOR ANY DEVIATION FROM THIS DESIGN; ANY FAILURE TO BUILD THE TRUSS IN CONFORMANCE WITH TPI; OR FABRICATING, HANDLING, SHIPPING, INSTALLING & BRACING OF TRUSSES. DESIGN CONFORMS WITH APPLICABLE PROVISIONS OF NDS (NATIONAL DESIGN SPEC. BY AF&PA) AND TPI. ALPINE CONNECTOR PLATES ARE MADE OF 20/18/16GA (W,H/S/K) ASTM A653 GRADE 40/60 (W, K/H,S) GALV. STEEL. APPLY PLATES TO EACH FACE OF TRUSS AND, UNLESS OTHERWISE LOCATED ON THIS DESIGN, POSITION PER DRAWINGS 160A-Z. ANY INSPECTION OF PLATES FOLLOWED BY (1) SHALL BE PER ANNEX A3 OF TPI1-2002 SEC.3. A SEAL ON THIS DRAWING INDICATES ACCEPTANCE OF PROFESSIONAL ENGINEERING RESPONSIBILITY SOLELY FOR THE TRUSS COMPONENT DESIGN SHOWN. THE SUITABILITY AND USE OF THIS COMPONENT FOR ANY BUILDING IS THE RESPONSIBILITY OF THE BUILDING DESIGNER PER ANSI/TPI 1 SEC. 2.

JAMES F. COLLINS JR. LICENSE No. 52242 STATE OF FLORIDA PROFESSIONAL ENGINEER

Oct 1

TC LL	20.0 PSF	REF	R215-- 46953
TC DL	10.0 PSF	DATE	10/16/06
BC DL	10.0 PSF	DRW	HCUSR215 06289306
BC LL	0.0 PSF	HC-ENG	DAB/AP
TOT.LD.	40.0 PSF	SEQN-	29273
DUR.FAC.	1.25	FROM	CAW
SPACING	24.0"	JREF-	1T1I215_Z07

THIS DWG PREPARED FROM COMPUTER INPUT (LOADS & DIMENSIONS) SUBMITTED BY TRUSS MFR.

Top chord 2x4 SP #2 N
Bot chord 2x4 SP #2 N :B1 2x4 SP SS:
Webs 2x4 SP #2 N

Wind reactions based on MWFRS pressures.

Calculated horizontal deflection is 0.22" due to live load and 0.23" due to dead load.

Max JT VERT DEFL: LL: 0.56" DL: 0.58" recommended camber 1"

Deflection meets L/240 live and L/180 total load.

Plates sized for a minimum of 3.00 sq.in./piece.

The overall height of this truss excluding overhang is 6-3-15.

110 mph wind, 15.00 ft mean hgt, ASCE 7-02, CLOSED bldg, not located within 4.50 ft from roof edge, CAT II, EXP B, wind TC DL=5.0 psf, wind BC DL=5.0 psf.

Right end vertical not exposed to wind pressure.

In lieu of structural panels use purlins to brace all flat TC @ 24" OC.

Calculated vertical deflection is 0.56" due to live load and 0.58" due to dead load at X = 8-7-13.

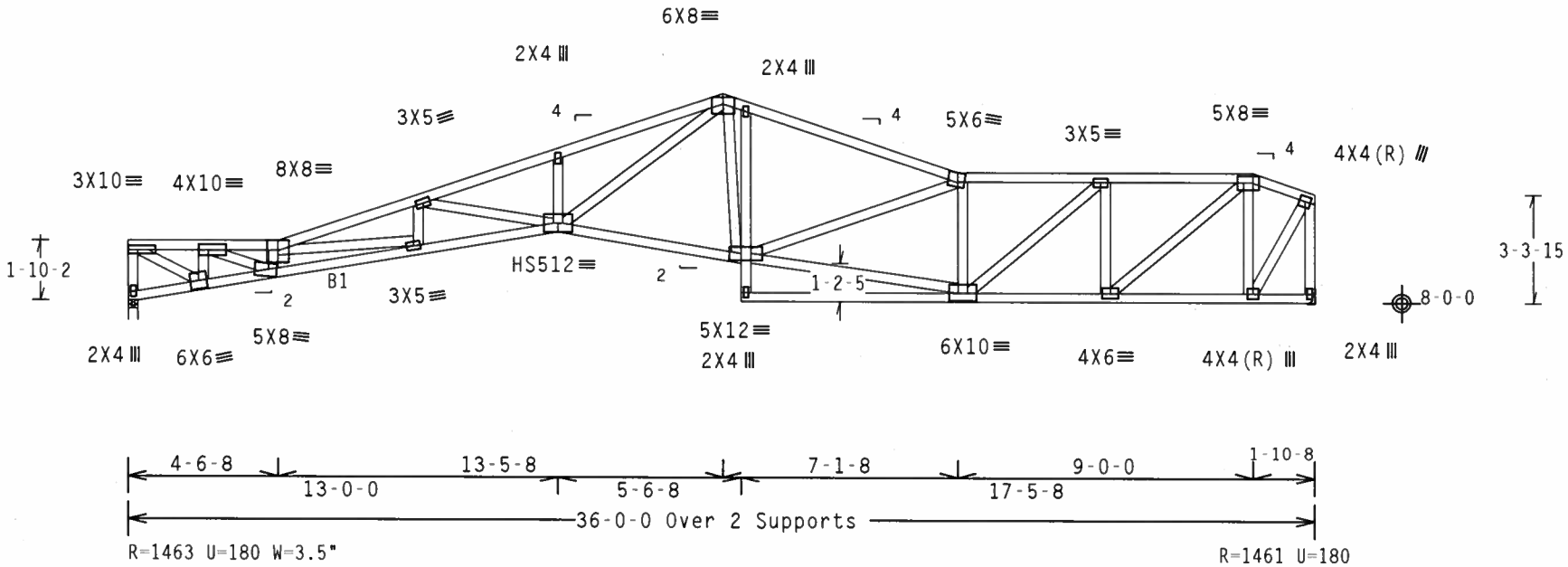

Design Crit: TPI-2002(STD)/FBC

PLT TYP. 20 Gauge HS,Wave Cq/RT=1.00(1.25)/10(0) 7.25.0503.00 QTY:1 FL/-/5/-/-/R/- Scale =.1875"/Ft.

ALPINE
Alpine Engineered Products, Inc.
1950 Marley Drive
Haines City, FL 33844
FL Certificate of Authorization # 567

WARNING TRUSSES REQUIRE EXTREME CARE IN FABRICATION, HANDLING, SHIPPING, INSTALLING AND BRACING. REFER TO BCSI 1 03 (BUILDING COMPONENT SAFETY INFORMATION), PUBLISHED BY TPI (TRUSS PLATE INSTITUTE, 583 D'ONOFRIO DR., SUITE 200, MADISON, WI 53719) AND WTCA (WOOD TRUSS COUNCIL OF AMERICA, 6300 ENTERPRISE LN, MADISON, WI 53719) FOR SAFETY PRACTICES PRIOR TO PERFORMING THESE FUNCTIONS. UNLESS OTHERWISE INDICATED, TOP CHORD SHALL HAVE PROPERLY ATTACHED STRUCTURAL PANELS AND BOTTOM CHORD SHALL HAVE A PROPERLY ATTACHED RIGID CEILING.

IMPORTANT FURNISH A COPY OF THIS DESIGN TO THE INSTALLATION CONTRACTOR. ALPINE ENGINEERED PRODUCTS, INC. SHALL NOT BE RESPONSIBLE FOR ANY DEVIATION FROM THIS DESIGN; ANY FAILURE TO BUILD THE TRUSS IN CONFORMANCE WITH TPI; OR FABRICATING, HANDLING, SHIPPING, INSTALLING & BRACING OF TRUSSES. DESIGN CONFORMS WITH APPLICABLE PROVISIONS OF NDS (NATIONAL DESIGN SPEC. BY AF&PA) AND TPI. ALPINE CONNECTOR PLATES ARE MADE OF 20/18/16GA (W,H/S/K) ASTM A653 GRADE 40/60 (W, K/H,S) GALV. STEEL. APPLY PLATES TO EACH FACE OF TRUSS AND, UNLESS OTHERWISE LOCATED ON THIS DESIGN, POSITION PER DRAWINGS 160A Z. ANY INSPECTION OF PLATES FOLLOWED BY (I) SHALL BE PER ANNEX A3 OF TPI1 2002 SEC.3. A SEAL ON THIS DRAWING INDICATES ACCEPTANCE OF PROFESSIONAL ENGINEERING RESPONSIBILITY SOLELY FOR THE TRUSS COMPONENT DESIGN SHOWN. THE SUITABILITY AND USE OF THIS COMPONENT FOR ANY BUILDING IS THE RESPONSIBILITY OF THE BUILDING DESIGNER PER ANSI/TPI 1 SEC. 2.

JAMES F. COLLINS, JR. LICENSE No. 52212 STATE OF FLORIDA PROFESSIONAL ENGINEER
Oct

TC LL	20.0 PSF	REF R215-- 46954
TC DL	10.0 PSF	DATE 10/16/06
BC DL	10.0 PSF	DRW HCUSR215 06289307
BC LL	0.0 PSF	HC-ENG DAB/AP
TOT.LD.	40.0 PSF	SEQN- 29328 REV
DUR.FAC.	1.25	FROM CAW
SPACING	24.0"	JREF- 1T1I215_Z07

THIS DWG PREPARED FROM COMPUTER INPUT (LOADS & DIMENSIONS) SUBMITTED BY TRUSS MFR.

Top chord 2x4 SP #2 N
Bot chord 2x4 SP #2 N :B1 2x4 SP SS:
Webs 2x4 SP #2 N
:Lt Slider 2x4 SP #2 N: BLOCK LENGTH = 3.694'

Calculated horizontal deflection is 0.24" due to live load and 0.25" due to dead load.

(A) Continuous lateral bracing equally spaced on member.

Deflection meets L/240 live and L/180 total load.

Plates sized for a minimum of 3.00 sq.in./piece.

The overall height of this truss excluding overhang is 6-3-15.

110 mph wind, 15.00 ft mean hgt, ASCE 7-02, CLOSED bldg, not located within 4.50 ft from roof edge, CAT II, EXP B, wind TC DL=5.0 psf, wind BC DL=5.0 psf.

Wind reactions based on MWFRS pressures.

Right end vertical not exposed to wind pressure.

In lieu of structural panels use purlins to brace all flat TC @ 24" OC.

Calculated vertical deflection is 0.59" due to live load and 0.61" due to dead load at X = 7-7-13.

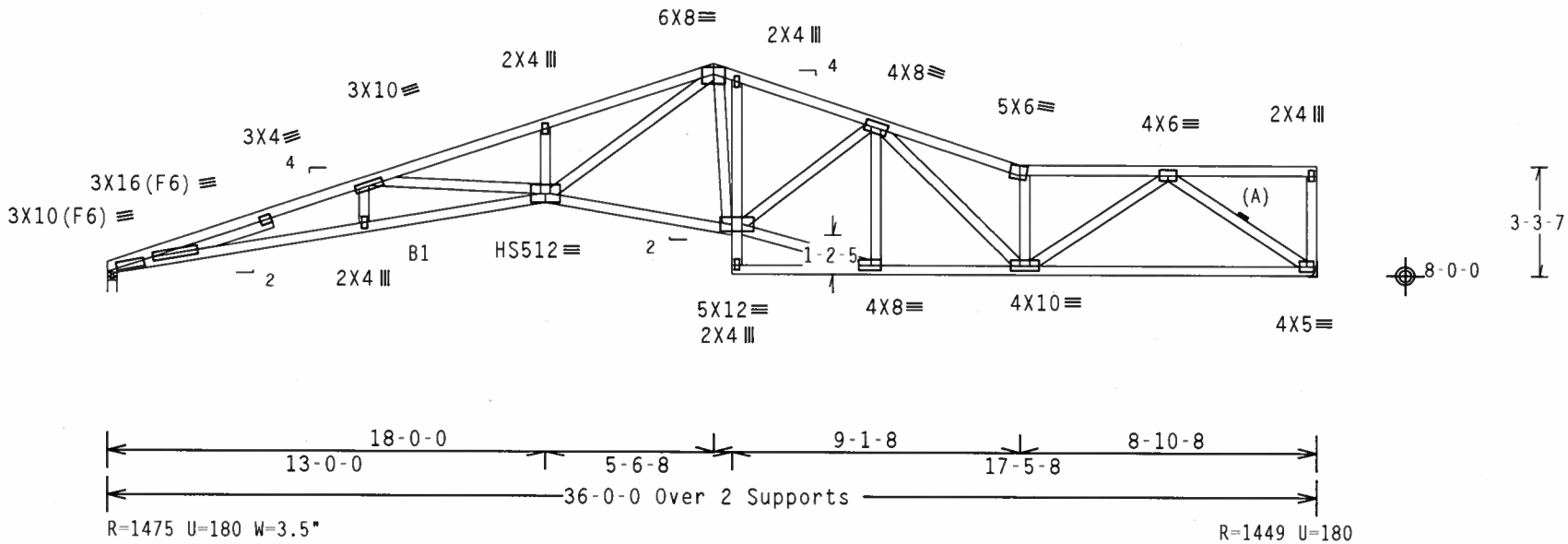

Design Crit: TPI-2002(STD)/FBC

PLT TYP. 20 Gauge HS,Wave Cq/RT=1.00(1.25)/10(0) 7.25.0503 QTY:1 FL/-/5/-/-/R/- Scale =.1875"/Ft.

ALPINE
Alpine Engineered Products, Inc.
1950 Marley Drive
Haines City, FL 33844
FL Certificate of Authorization # 567

WARNING TRUSSES REQUIRE EXTREME CARE IN FABRICATION, HANDLING, SHIPPING, INSTALLING AND BRACING. REFER TO BCSI 1-03 (BUILDING COMPONENT SAFETY INFORMATION), PUBLISHED BY TPI (TRUSS PLATE INSTITUTE, 583 D'ONOFRIO DR., SUITE 200, MADISON, WI 53719) AND WTCA (WOOD TRUSS COUNCIL OF AMERICA, 6300 ENTERPRISE LN, MADISON, WI 53719) FOR SAFETY PRACTICES PRIOR TO PERFORMING THESE FUNCTIONS. UNLESS OTHERWISE INDICATED, TOP CHORD SHALL HAVE PROPERLY ATTACHED STRUCTURAL PANELS AND BOTTOM CHORD SHALL HAVE A PROPERLY ATTACHED RIGID CEILING.

IMPORTANTFURNISH A COPY OF THIS DESIGN TO THE INSTALLATION CONTRACTOR. ALPINE ENGINEERED PRODUCTS, INC. SHALL NOT BE RESPONSIBLE FOR ANY DEVIATION FROM THIS DESIGN; ANY FAILURE TO BUILD THE TRUSS IN CONFORMANCE WITH TPI; OR FABRICATING, HANDLING, SHIPPING, INSTALLING & BRACING OF TRUSSES. DESIGN CONFORMS WITH APPLICABLE PROVISIONS OF NDS (NATIONAL DESIGN SPEC. BY AF&PA) AND TPI. ALPINE CONNECTOR PLATES ARE MADE OF 20/18/16GA (W,H/S/K) ASTM A653 GRADE 40/60 (W, K/H,S) GALV. STEEL. APPLY PLATES TO EACH FACE OF TRUSS AND, UNLESS OTHERWISE LOCATED ON THIS DESIGN, POSITION PER DRAWINGS 160A-Z. ANY INSPECTION OF PLATES FOLLOWED BY (1) SHALL BE PER ANNEX A3 OF TPI1-2002 SEC.3. A SEAL ON THIS DRAWING INDICATES ACCEPTANCE OF PROFESSIONAL ENGINEERING RESPONSIBILITY SOLELY FOR THE TRUSS COMPONENT DESIGN SHOWN. THE SUITABILITY AND USE OF THIS COMPONENT FOR ANY BUILDING IS THE RESPONSIBILITY OF THE BUILDING DESIGNER PER ANSI/TPI 1 SEC. 2.

JAMES F. COLLINS, JR. LICENSE No. 52211 STATE OF FLORIDA PROFESSIONAL ENGINEER
Oct 17 '06

TC LL	20.0 PSF	REF R215-- 46955
TC DL	10.0 PSF	DATE 10/16/06
BC DL	10.0 PSF	DRW HCUSR215 06289308
BC LL	0.0 PSF	HC-ENG DAB/AP
TOT.LD.	40.0 PSF	SEQN- 29334
DUR.FAC.	1.25	FROM CAW
SPACING	24.0"	JREF- 1T1I215_Z07

THIS DWG PREPARED FROM COMPUTER INPUT (LOADS & DIMENSIONS) SUBMITTED BY TRUSS MFR.

Top chord 2x4 SP #2 N :T3 2x4 SP SS:
Bot chord 2x4 SP #2 N :B1 2x4 SP SS:
Webs 2x4 SP #2 N
:Lt Slider 2x4 SP #2 N: BLOCK LENGTH = 3.694'

Calculated horizontal deflection is 0.24" due to live load and 0.25" due to dead load.

In lieu of structural panels use purlins to brace all flat TC @ 24" OC.

Calculated vertical deflection is 0.64" due to live load and 0.66" due to dead load at X = 9-9-3.

110 mph wind, 15.00 ft mean hgt, ASCE 7-02, CLOSED bldg, not located within 4.50 ft from roof edge, CAT II, EXP B, wind TC DL=5.0 psf, wind BC DL=5.0 psf.

Wind reactions based on MWFRS pressures.

Right end vertical not exposed to wind pressure.

Deflection meets L/240 live and L/180 total load.

Plates sized for a minimum of 3.00 sq.in./piece.

The overall height of this truss excluding overhang is 6-3-15.

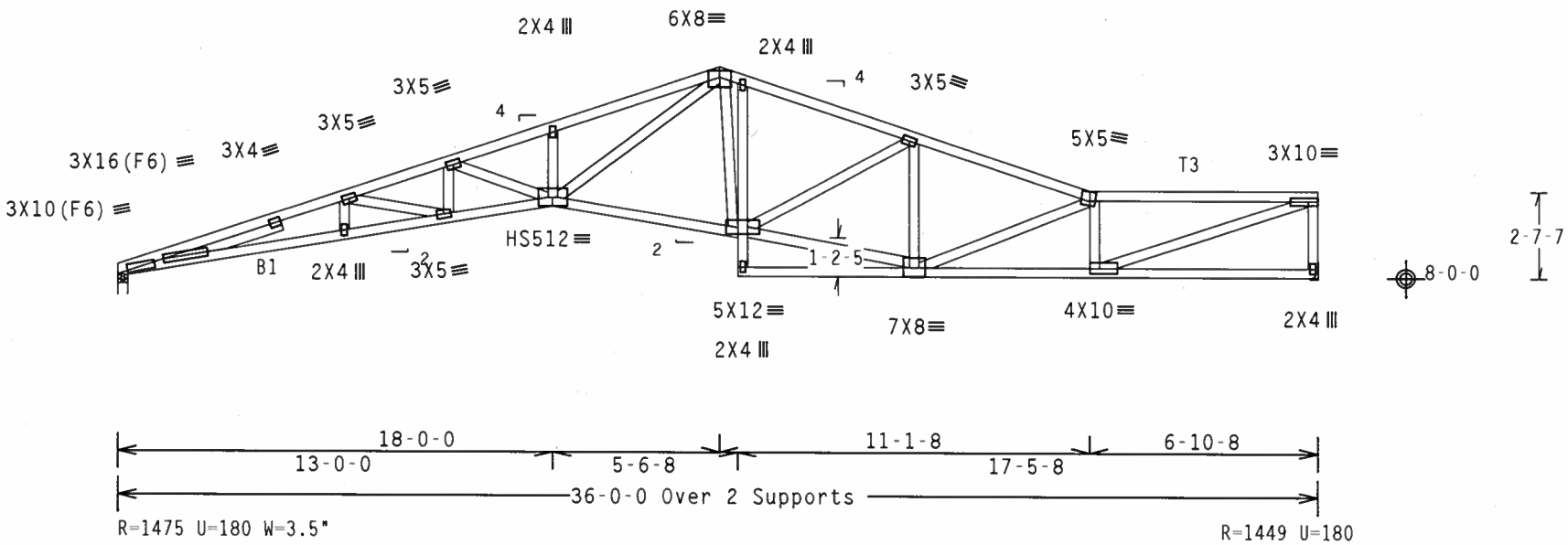

Design Crit: TPI-2002(STD)/FBC

PLT TYP. 20 Gauge HS,Wave Cq/RT=1.00(1.25)/10(0) 7.25.0503 QTY:1 FL/-/5/-/-/R/- Scale =.1875"/Ft.

ALPINE
Alpine Engineered Products, Inc.
1950 Marley Drive
Haines City, FL 33844
FL Certificate of Authorization # 567

WARNING TRUSSES REQUIRE EXTREME CARE IN FABRICATION, HANDLING, SHIPPING, INSTALLING AND BRACING. REFER TO BCSI 1-03 (BUILDING COMPONENT SAFETY INFORMATION), PUBLISHED BY TPI (TRUSS PLATE INSTITUTE, 583 D'ONOFRIO DR., SUITE 200, MADISON, WI 53719) AND WTCA (WOOD TRUSS COUNCIL OF AMERICA, 6300 ENTERPRISE LN, MADISON, WI 53719) FOR SAFETY PRACTICES PRIOR TO PERFORMING THESE FUNCTIONS. UNLESS OTHERWISE INDICATED, TOP CHORD SHALL HAVE PROPERLY ATTACHED STRUCTURAL PANELS AND BOTTOM CHORD SHALL HAVE A PROPERLY ATTACHED RIGID CEILING.

IMPORTANTFURNISH A COPY OF THIS DESIGN TO THE INSTALLATION CONTRACTOR. ALPINE ENGINEERED PRODUCTS, INC. SHALL NOT BE RESPONSIBLE FOR ANY DEVIATION FROM THIS DESIGN; ANY FAILURE TO BUILD THE TRUSS IN CONFORMANCE WITH TPI; OR FABRICATING, HANDLING, SHIPPING, INSTALLING & BRACING OF TRUSSES. DESIGN CONFORMS WITH APPLICABLE PROVISIONS OF NDS (NATIONAL DESIGN SPEC. BY AF&PA) AND TPI. ALPINE CONNECTOR PLATES ARE MADE OF 20/18/16GA (W.H/S/K) ASTM A653 GRADE 40/60 (W. K/H.S) GALV. STEEL. APPLY PLATES TO EACH FACE OF TRUSS AND, UNLESS OTHERWISE LOCATED ON THIS DESIGN, POSITION PER DRAWINGS 160A-Z. ANY INSPECTION OF PLATES FOLLOWED BY (1) SHALL BE PER ANNEX A3 OF TPI1-2002 SEC.3. A SEAL ON THIS DRAWING INDICATES ACCEPTANCE OF PROFESSIONAL ENGINEERING RESPONSIBILITY SOLELY FOR THE TRUSS COMPONENT DESIGN SHOWN. THE SUITABILITY AND USE OF THIS COMPONENT FOR ANY BUILDING IS THE RESPONSIBILITY OF THE BUILDING DESIGNER PER ANSI/TPI 1 SEC. 2.

JAMES F. COLLINS, JR. LICENSE No. 52212 STATE OF FLORIDA PROFESSIONAL ENGINEER
Oct 17, 2006

TC LL	20.0 PSF	REF	R215-- 46956
TC DL	10.0 PSF	DATE	10/16/06
BC DL	10.0 PSF	DRW	HCUSR215 06289309
BC LL	0.0 PSF	HC-ENG	DAB/AP
TOT.LD.	40.0 PSF	SEQN-	29341
DUR.FAC.	1.25	FROM	CAW
SPACING	24.0"	JREF-	1T1I215_Z07

THIS DWG PREPARED FROM COMPUTER INPUT (LOADS & DIMENSIONS) SUBMITTED BY TRUSS MFR.

Top chord 2x4 SP #2 N
Bot chord 2x4 SP #2 N
Webs 2x4 SP #2 N
:Lt Slider 2x4 SP #2 N: BLOCK LENGTH = 3.694'

(A) Continuous lateral bracing equally spaced on member.

Deflection meets L/240 live and L/180 total load.

Plates sized for a minimum of 3.00 sq.in./piece.

NOTE:
TRUSS MAY EXHIBIT UNDESIREABLE DEFLECTION
UNDER FULL DESIGN LOAD, AS THE LONG TERM EFFECTS
OF CREEP HAVE NOT BEEN CONSIDERED FOR THIS DESIGN.

110 mph wind, 15.00 ft mean hgt, ASCE 7-02, CLOSED bldg, not located within 4.50 ft from roof edge, CAT II, EXP B, wind TC DL=5.0 psf, wind BC DL=5.0 psf.

Wind reactions based on MWFRS pressures.

In lieu of structural panels use purlins to brace all flat TC @ 24" OC.

The overall height of this truss excluding overhang is 6-3-15.

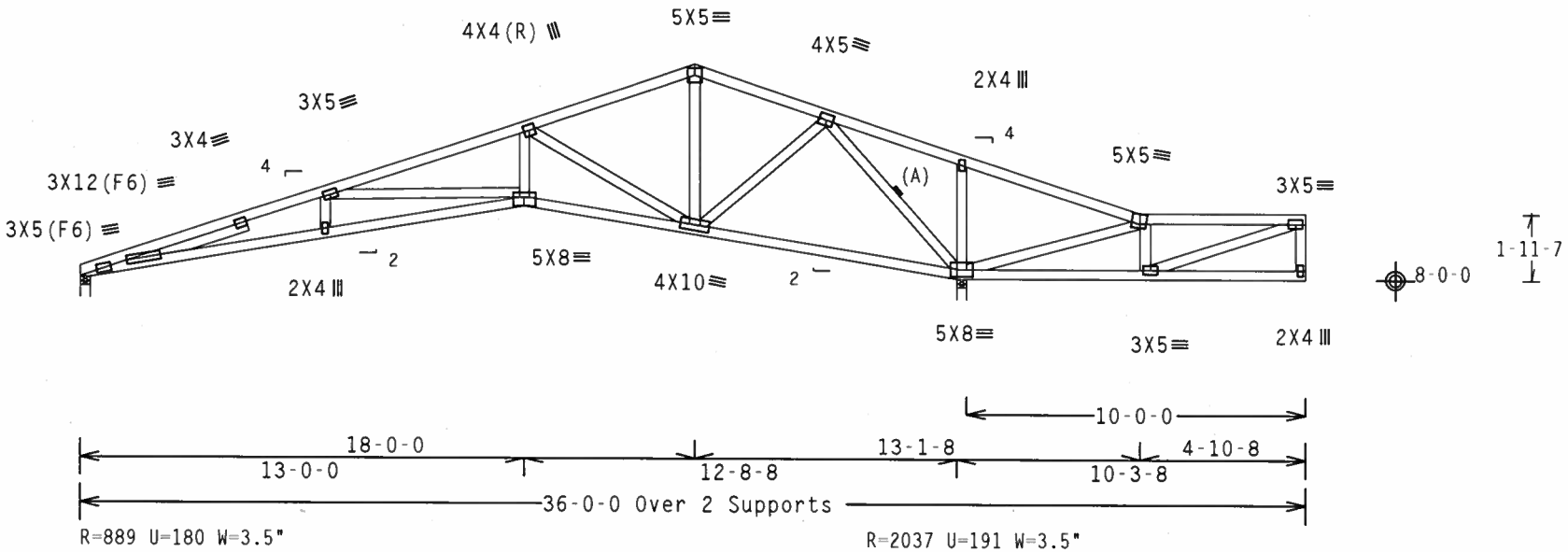

Design Crit: TPI-2002(STD)/FBC

PLT TYP. Wave | Cq/RT=1.00(1.25)/10(0) 7.25.0503.00 | QTY:1 | FL/-/5/-/-/R/- | Scale =.1875"/Ft.

ALPINE
Alpine Engineered Products, Inc.
1950 Marley Drive
Haines City, FL 33844
FL Certificate of Authorization # 567

WARNING TRUSSES REQUIRE EXTREME CARE IN FABRICATION, HANDLING, SHIPPING, INSTALLING AND BRACING. REFER TO BCSI 1-03 (BUILDING COMPONENT SAFETY INFORMATION), PUBLISHED BY TPI (TRUSS PLATE INSTITUTE, 583 D'ONOFRIO DR., SUITE 200, MADISON, WI 53719) AND WTCA (WOOD TRUSS COUNCIL OF AMERICA, 6300 ENTERPRISE LN, MADISON, WI 53719) FOR SAFETY PRACTICES PRIOR TO PERFORMING THESE FUNCTIONS. UNLESS OTHERWISE INDICATED, TOP CHORD SHALL HAVE PROPERLY ATTACHED STRUCTURAL PANELS AND BOTTOM CHORD SHALL HAVE A PROPERLY ATTACHED RIGID CEILING.

IMPORTANTFURNISH A COPY OF THIS DESIGN TO THE INSTALLATION CONTRACTOR. ALPINE ENGINEERED PRODUCTS, INC. SHALL NOT BE RESPONSIBLE FOR ANY DEVIATION FROM THIS DESIGN; ANY FAILURE TO BUILD THE TRUSS IN CONFORMANCE WITH TPI; OR FABRICATING, HANDLING, SHIPPING, INSTALLING & BRACING OF TRUSSES. DESIGN CONFORMS WITH APPLICABLE PROVISIONS OF NDS (NATIONAL DESIGN SPEC. BY AF&PA) AND TPI. ALPINE CONNECTOR PLATES ARE MADE OF 20/18/16GA (W.H/S/K) ASTM A653 GRADE 40/60 (W. K/H.S) GALV. STEEL. APPLY PLATES TO EACH FACE OF TRUSS AND, UNLESS OTHERWISE LOCATED ON THIS DESIGN, POSITION PER DRAWINGS 160A-Z. ANY INSPECTION OF PLATES FOLLOWED BY (I) SHALL BE PER ANNEX A3 OF TPI1-2002 SEC.3. A SEAL ON THIS DRAWING INDICATES ACCEPTANCE OF PROFESSIONAL ENGINEERING RESPONSIBILITY SOLELY FOR THE TRUSS COMPONENT DESIGN SHOWN. THE SUITABILITY AND USE OF THIS COMPONENT FOR ANY BUILDING IS THE RESPONSIBILITY OF THE BUILDING DESIGNER PER ANSI/TPI 1 SEC. 2.

JAMES F. COLLINS, JR. LICENSE No. 52212 STATE OF FLORIDA PROFESSIONAL ENGINEER
Oct 17, 2006

TC LL	20.0 PSF	REF	R215-- 46957
TC DL	10.0 PSF	DATE	10/16/06
BC DL	10.0 PSF	DRW	HCUSR215 06289310
BC LL	0.0 PSF	HC-ENG	RA/AP
TOT.LD.	40.0 PSF	SEQN-	29367
DUR.FAC.	1.25	FROM	CAW
SPACING	24.0"	JREF-	1T1I215_Z07

Top chord 2x4 SP #2 N
Bot chord 2x4 SP #2 N
Webs 2x4 SP #2 N
:Lt Slider 2x4 SP #2 N: BLOCK LENGTH = 3.694'

(A) Continuous lateral bracing equally spaced on member.

Deflection meets L/240 live and L/180 total load.

Plates sized for a minimum of 3.00 sq.in./piece.

NOTE:
TRUSS MAY EXHIBIT UNDESIREABLE DEFLECTION
UNDER FULL DESIGN LOAD, AS THE LONG TERM EFFECTS
OF CREEP HAVE NOT BEEN CONSIDERED FOR THIS DESIGN.

110 mph wind, 15.00 ft mean hgt, ASCE 7-02, CLOSED bldg, not located within 4.50 ft from roof edge, CAT II, EXP B, wind TC DL=5.0 psf, wind BC DL=5.0 psf.

Wind reactions based on MWFRS pressures.

In lieu of structural panels use purlins to brace all flat TC @ 24" OC.

The overall height of this truss excluding overhang is 6-3-15.

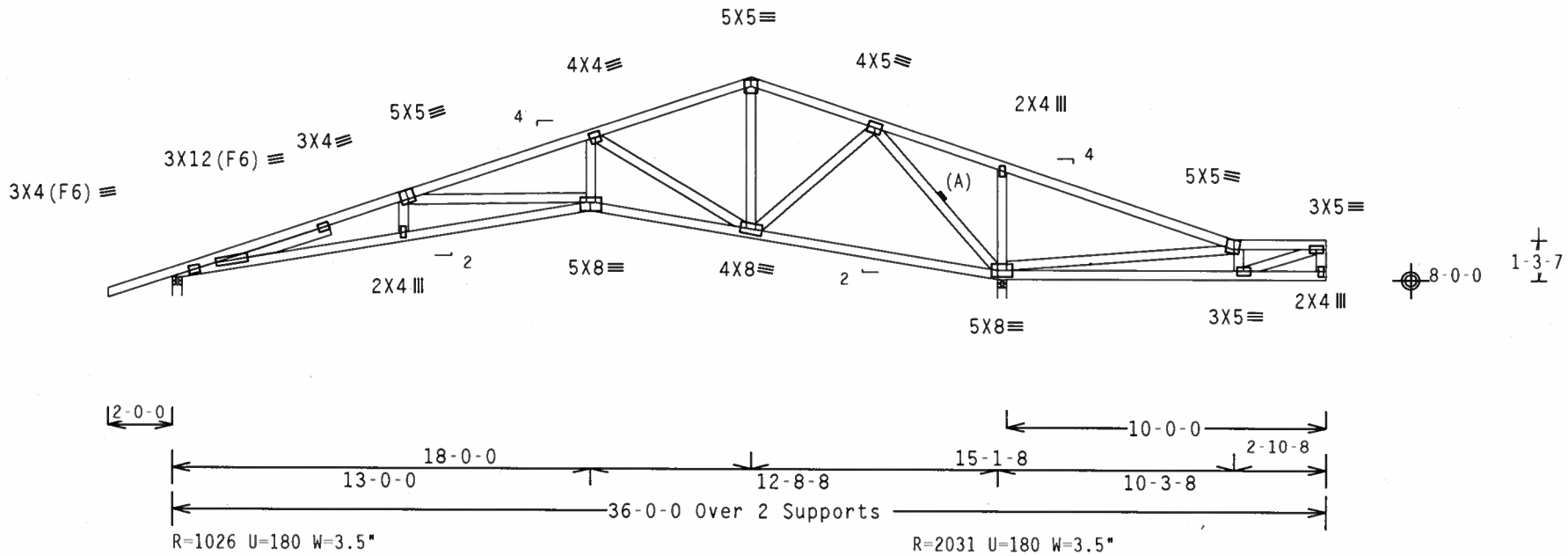

Design Crit: TPI-2002(STD)/FBC

PLT TYP. Wave Cq/RT=1.00(1.25)/10(0) 7.25.0503.0 QTY:1 FL/-/5/-/-/R/- Scale =.1875"/Ft.

ALPINE
Alpine Engineered Products, Inc.
1950 Marley Drive
Haines City, FL 33844
FL Certificate of Authorization # 567

WARNING TRUSSES REQUIRE EXTREME CARE IN FABRICATION, HANDLING, SHIPPING, INSTALLING AND BRACING. REFER TO BCSI 1-03 (BUILDING COMPONENT SAFETY INFORMATION), PUBLISHED BY TPI (TRUSS PLATE INSTITUTE, 583 D'ONOFRIO DR., SUITE 200, MADISON, WI 53719) AND WTCA (WOOD TRUSS COUNCIL OF AMERICA, 6300 ENTERPRISE LN, MADISON, WI 53719) FOR SAFETY PRACTICES PRIOR TO PERFORMING THESE FUNCTIONS. UNLESS OTHERWISE INDICATED, TOP CHORD SHALL HAVE PROPERLY ATTACHED STRUCTURAL PANELS AND BOTTOM CHORD SHALL HAVE A PROPERLY ATTACHED RIGID CEILING.

IMPORTANT FURNISH A COPY OF THIS DESIGN TO THE INSTALLATION CONTRACTOR. ALPINE ENGINEERED PRODUCTS, INC. SHALL NOT BE RESPONSIBLE FOR ANY DEVIATION FROM THIS DESIGN; ANY FAILURE TO BUILD THE TRUSS IN CONFORMANCE WITH TPI; OR FABRICATING, HANDLING, SHIPPING, INSTALLING & BRACING OF TRUSSES. DESIGN CONFORMS WITH APPLICABLE PROVISIONS OF NDS (NATIONAL DESIGN SPEC, BY AF&PA) AND TPI. ALPINE CONNECTOR PLATES ARE MADE OF 20/18/16GA (W,H/S/K) ASTM A653 GRADE 40/60 (W, K/H,S) GALV. STEEL. APPLY PLATES TO EACH FACE OF TRUSS AND, UNLESS OTHERWISE LOCATED ON THIS DESIGN, POSITION PER DRAWINGS 160A-Z. ANY INSPECTION OF PLATES FOLLOWED BY (1) SHALL BE PER ANNEX A3 OF TPI1-2002 SEC.3. A SEAL ON THIS DRAWING INDICATES ACCEPTANCE OF PROFESSIONAL ENGINEERING RESPONSIBILITY SOLELY FOR THE TRUSS COMPONENT DESIGN SHOWN. THE SUITABILITY AND USE OF THIS COMPONENT FOR ANY BUILDING IS THE RESPONSIBILITY OF THE BUILDING DESIGNER PER ANSI/TPI 1 SEC. 2.

JAMES F. COLLINS JR. LICENSED No. 52212 STATE OF FLORIDA PROFESSIONAL ENGINEER
Oct 17 06

TC LL	20.0 PSF	REF	R215-- 46958
TC DL	10.0 PSF	DATE	10/16/06
BC DL	10.0 PSF	DRW	HCUSR215 06289311
BC LL	0.0 PSF	HC-ENG	RA/AP
TOT.LD.	40.0 PSF	SEQN-	29373
DUR.FAC.	1.25	FROM	CAW
SPACING	24.0"	JREF-	1T1I215_Z07

THIS DWG PREPARED FROM COMPUTER INPUT (LOADS & DIMENSIONS) SUBMITTED BY TRUSS MFR.

Top chord 2x4 SP #2 N :T2 2x6 SP SS:
:T3 2x6 SP #2 Dense: :T5 2x6 SP #2 N:
Bot chord 2x6 SP #2 N
Webs 2x4 SP #2 N

110 mph wind, 15.00 ft mean hgt, ASCE 7-02, CLOSED bldg, Located anywhere in roof, CAT II, EXP B, wind TC DL=5.0 psf, wind BC DL=5.0 psf.

Wind reactions based on MWFRS pressures.

#1 hip supports 7-0-0 jacks W/2 panel TC and no end vert.

Plates sized for a minimum of 3.00 sq.in./piece.

2 COMPLETE TRUSSES REQUIRED

Nailing Schedule: (0.131"x3"_Gun_nails)
Top Chord: 1 Row @12.00" o.c.
Bot Chord: 1 Row @12.00" o.c.
Webs : 1 Row @ 4" o.c.
Use equal spacing between rows and stagger nails in each row to avoid splitting.

In lieu of structural panels use purlins to brace all flat TC @ 24" OC.

Deflection meets L/240 live and L/180 total load.

The overall height of this truss excluding overhang is 2-7-15.

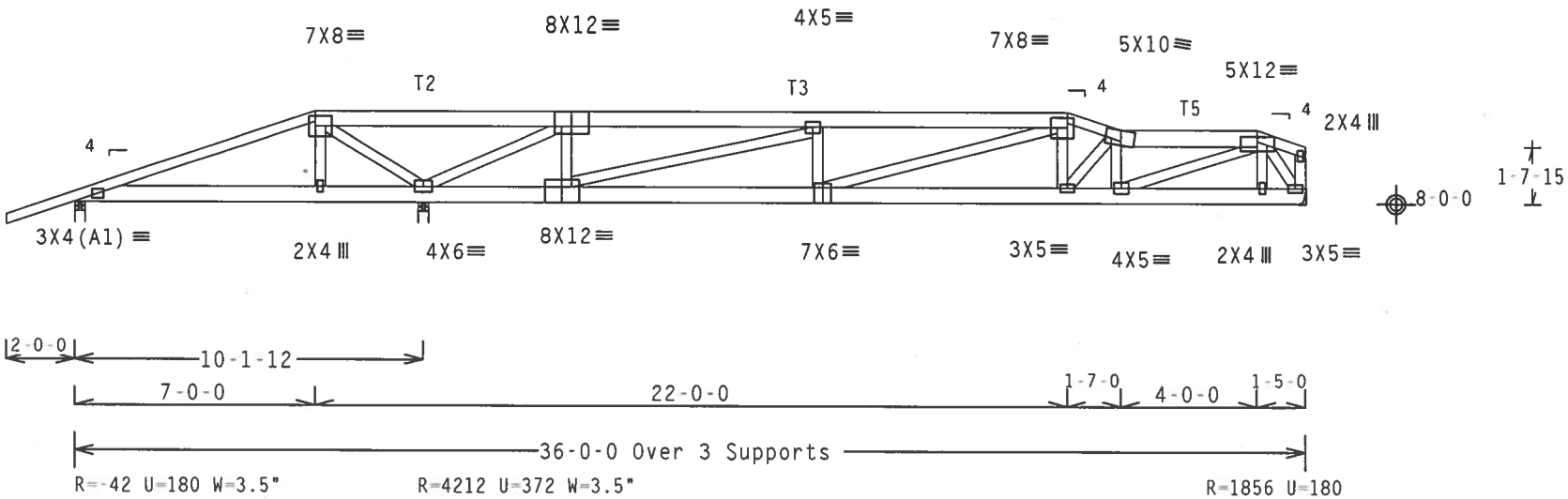

Design Crit: TPI-2002(STD)/FBC

PLT TYP. Wave Cq/RT=1.00(1.25)/10(0) 7.25.0503.00 QTY:1 FL/-/5/-/-/R/- Scale =.1875"/Ft.

ALPINE
Alpine Engineered Products, Inc.
1950 Marley Drive
Haines City, FL 33844
FL Certificate of Authorization # 567

WARNING TRUSSES REQUIRE EXTREME CARE IN FABRICATION, HANDLING, SHIPPING, INSTALLING AND BRACING. REFER TO BCSI 1-03 (BUILDING COMPONENT SAFETY INFORMATION), PUBLISHED BY TPI (TRUSS PLATE INSTITUTE, 583 D'ONOFRIO DR., SUITE 200, MADISON, WI 53719) AND WTCA (WOOD TRUSS COUNCIL OF AMERICA, 6300 ENTERPRISE LN, MADISON, WI 53719) FOR SAFETY PRACTICES PRIOR TO PERFORMING THESE FUNCTIONS. UNLESS OTHERWISE INDICATED, TOP CHORD SHALL HAVE PROPERLY ATTACHED STRUCTURAL PANELS AND BOTTOM CHORD SHALL HAVE A PROPERLY ATTACHED RIGID CEILING.

IMPORTANTFURNISH A COPY OF THIS DESIGN TO THE INSTALLATION CONTRACTOR. ALPINE ENGINEERED PRODUCTS, INC. SHALL NOT BE RESPONSIBLE FOR ANY DEVIATION FROM THIS DESIGN; ANY FAILURE TO BUILD THE TRUSS IN CONFORMANCE WITH TPI; OR FABRICATING, HANDLING, SHIPPING, INSTALLING & BRACING OF TRUSSES. DESIGN CONFORMS WITH APPLICABLE PROVISIONS OF NDS (NATIONAL DESIGN SPEC. BY AF&PA) AND TPI. ALPINE CONNECTOR PLATES ARE MADE OF 20/18/16GA (W.H/S/K) ASTM A653 GRADE 40/60 (W. K/H.S) GALV. STEEL. APPLY PLATES TO EACH FACE OF TRUSS AND, UNLESS OTHERWISE LOCATED ON THIS DESIGN, POSITION PER DRAWINGS 160A-Z. ANY INSPECTION OF PLATES FOLLOWED BY (1) SHALL BE PER ANNEX A3 OF TPI1-2002 SEC.3. A SEAL ON THIS DRAWING INDICATES ACCEPTANCE OF PROFESSIONAL ENGINEERING RESPONSIBILITY SOLELY FOR THE TRUSS COMPONENT DESIGN SHOWN. THE SUITABILITY AND USE OF THIS COMPONENT FOR ANY BUILDING IS THE RESPONSIBILITY OF THE BUILDING DESIGNER PER ANSI/TPI 1 SEC. 2.

JAMES F. COLLINS JR. LICENSE No. 52212 STATE OF FLORIDA PROFESSIONAL ENGINEER
Oct 17 '06

TC LL	20.0 PSF	REF	R215-- 46959
TC DL	10.0 PSF	DATE	10/16/06
BC DL	10.0 PSF	DRW	HCUSR215 06289312
BC LL	0.0 PSF	HC-ENG	DAB/AP
TOT.LD.	40.0 PSF	SEQN-	29391
DUR.FAC.	1.25	FROM	CAW
SPACING	24.0"	JREF-	1T1I215_Z07

THIS DWG PREPARED FROM COMPUTER INPUT (LOADS & DIMENSIONS) SUBMITTED BY TRUSS MFR.

Top chord 2x4 SP #2 N
Bot chord 2x4 SP #2 N
Webs 2x4 SP #2 N

Wind reactions based on MWFRS pressures.

In lieu of structural panels use purlins to brace all flat TC @ 24" OC.

Plates sized for a minimum of 3.00 sq.in./piece.

110 mph wind, 15.00 ft mean hgt, ASCE 7-02, CLOSED bldg, not located within 4.50 ft from roof edge, CAT II, EXP B, wind TC DL=5.0 psf, wind BC DL=5.0 psf.

(A) Continuous lateral bracing equally spaced on member.

Deflection meets L/240 live and L/180 total load.

The overall height of this truss excluding overhang is 3-3-15.

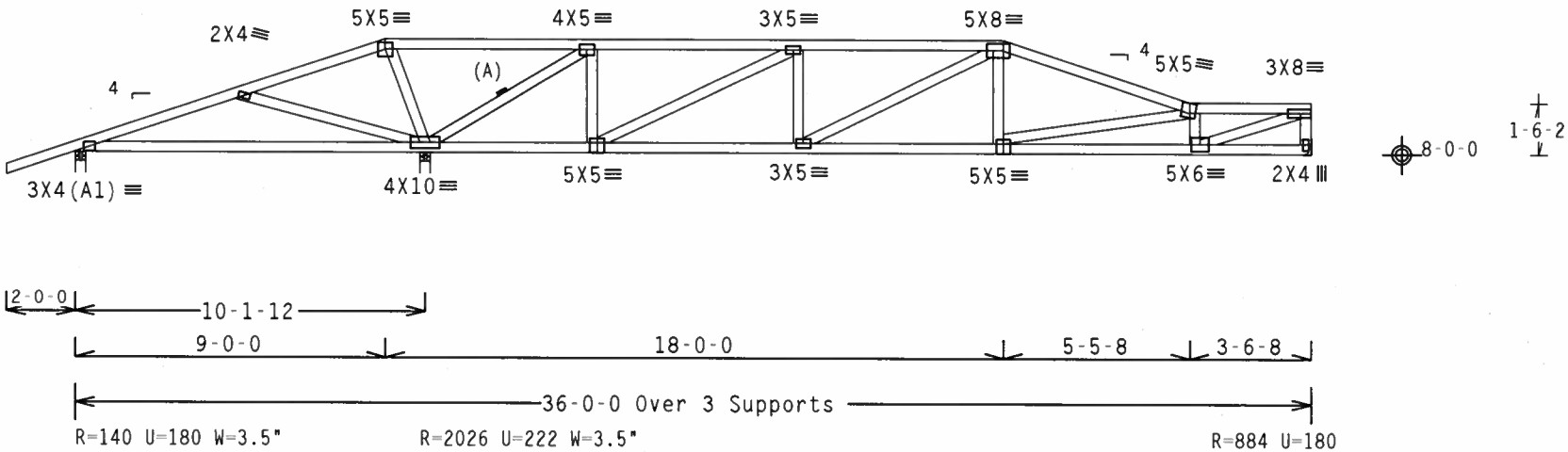

Design Crit: TPI-2002(STD)/FBC

PLT TYP. Wave — Cq/RT=1.00(1.25)/10(0) 7.25.0503 — QTY:1 — FL/-/5/-/-/R/- — Scale =.1875"/Ft.

ALPINE

Alpine Engineered Products, Inc.
1950 Marley Drive
Haines City, FL 33844
FL Certificate of Authorization # 567

WARNING TRUSSES REQUIRE EXTREME CARE IN FABRICATION, HANDLING, SHIPPING, INSTALLING AND BRACING. REFER TO BCSI 1 03 (BUILDING COMPONENT SAFETY INFORMATION), PUBLISHED BY TPI (TRUSS PLATE INSTITUTE, 583 D'ONOFRIO DR., SUITE 200, MADISON, WI 53719) AND WTCA (WOOD TRUSS COUNCIL OF AMERICA, 6300 ENTERPRISE LN, MADISON, WI 53719) FOR SAFETY PRACTICES PRIOR TO PERFORMING THESE FUNCTIONS. UNLESS OTHERWISE INDICATED, TOP CHORD SHALL HAVE PROPERLY ATTACHED STRUCTURAL PANELS AND BOTTOM CHORD SHALL HAVE A PROPERLY ATTACHED RIGID CEILING.

IMPORTANT FURNISH A COPY OF THIS DESIGN TO THE INSTALLATION CONTRACTOR. ALPINE ENGINEERED PRODUCTS, INC. SHALL NOT BE RESPONSIBLE FOR ANY DEVIATION FROM THIS DESIGN; ANY FAILURE TO BUILD THE TRUSS IN CONFORMANCE WITH TPI; OR FABRICATING, HANDLING, SHIPPING, INSTALLING & BRACING OF TRUSSES. DESIGN CONFORMS WITH APPLICABLE PROVISIONS OF NDS (NATIONAL DESIGN SPEC. BY AF&PA) AND TPI. ALPINE CONNECTOR PLATES ARE MADE OF 20/18/16GA (W,H/S/K) ASTM A653 GRADE 40/60 (W, K/H,S) GALV. STEEL. APPLY PLATES TO EACH FACE OF TRUSS AND, UNLESS OTHERWISE LOCATED ON THIS DESIGN, POSITION PER DRAWINGS 160A Z. ANY INSPECTION OF PLATES FOLLOWED BY (1) SHALL BE PER ANNEX A3 OF TPI1 2002 SEC.3. A SEAL ON THIS DRAWING INDICATES ACCEPTANCE OF PROFESSIONAL ENGINEERING RESPONSIBILITY SOLELY FOR THE TRUSS COMPONENT DESIGN SHOWN. THE SUITABILITY AND USE OF THIS COMPONENT FOR ANY BUILDING IS THE RESPONSIBILITY OF THE BUILDING DESIGNER PER ANSI/TPI 1 SEC. 2.

JAMES F. COLLINS, JR. LICENSE No. 52212 STATE OF FLORIDA PROFESSIONAL ENGINEER

Oct 17, 06

TC LL	20.0 PSF	REF	R215-- 46960
TC DL	10.0 PSF	DATE	10/16/06
BC DL	10.0 PSF	DRW	HCUSR215 06289313
BC LL	0.0 PSF	HC-ENG	DAB/AP
TOT.LD.	40.0 PSF	SEQN-	29398
DUR.FAC.	1.25	FROM	CAW
SPACING	24.0"	JREF-	1T1I215_Z07

THIS DWG PREPARED FROM COMPUTER INPUT (LOADS & DIMENSIONS) SUBMITTED BY TRUSS MFR.

Top chord 2x4 SP #2 N
Bot chord 2x4 SP #2 N
Webs 2x4 SP #2 N

Wind reactions based on MWFRS pressures.

Deflection meets L/240 live and L/180 total load.

The overall height of this truss excluding overhang is 3-11-15.

110 mph wind, 15.00 ft mean hgt, ASCE 7-02, CLOSED bldg, not located within 4.50 ft from roof edge, CAT II, EXP B, wind TC DL=5.0 psf, wind BC DL=5.0 psf.

In lieu of structural panels use purlins to brace all flat TC @ 24" OC.

Plates sized for a minimum of 3.00 sq.in./piece.

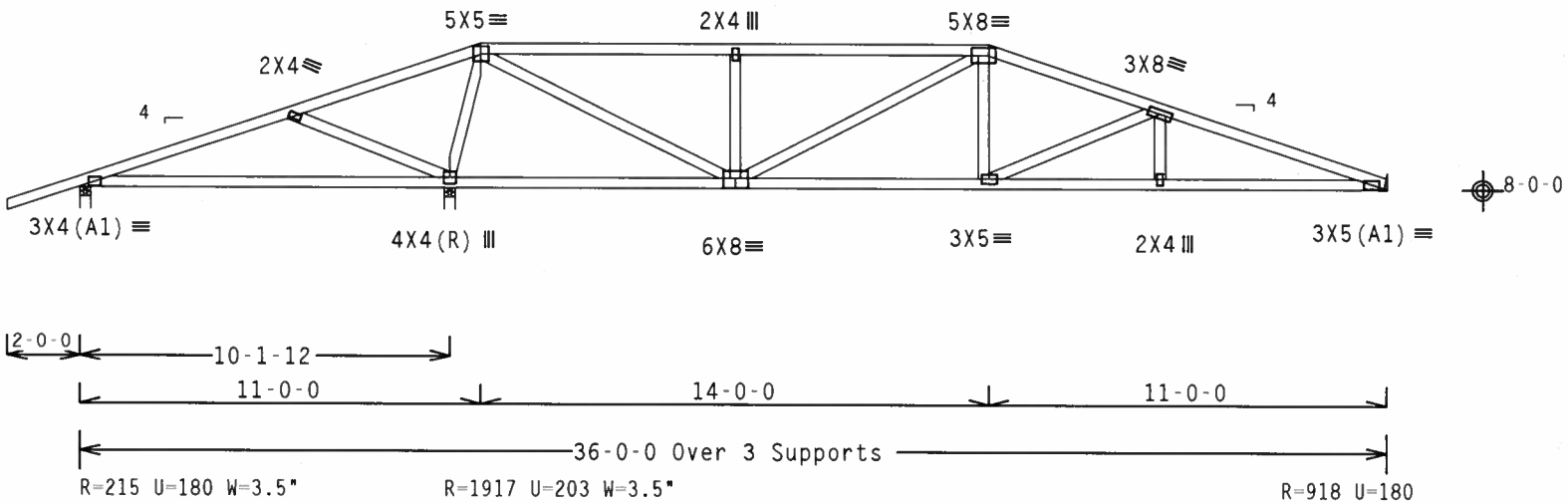

Design Crit: TPI-2002(STD)/FBC
Cq/RT=1.00(1.25)/10(0) 7.25.0503.00

PLT TYP. Wave QTY:1 FL/-/5/-/-/R/- Scale =.1875"/Ft.

ALPINE
Alpine Engineered Products, Inc.
1950 Marley Drive
Haines City, FL 33844
FL Certificate of Authorization # 567

WARNING TRUSSES REQUIRE EXTREME CARE IN FABRICATION, HANDLING, SHIPPING, INSTALLING AND BRACING. REFER TO BCSI 1-03 (BUILDING COMPONENT SAFETY INFORMATION), PUBLISHED BY TPI (TRUSS PLATE INSTITUTE, 583 D'ONOFRIO DR., SUITE 200, MADISON, WI 53719) AND WTCA (WOOD TRUSS COUNCIL OF AMERICA, 6300 ENTERPRISE LN, MADISON, WI 53719) FOR SAFETY PRACTICES PRIOR TO PERFORMING THESE FUNCTIONS. UNLESS OTHERWISE INDICATED, TOP CHORD SHALL HAVE PROPERLY ATTACHED STRUCTURAL PANELS AND BOTTOM CHORD SHALL HAVE A PROPERLY ATTACHED RIGID CEILING.

IMPORTANTFURNISH A COPY OF THIS DESIGN TO THE INSTALLATION CONTRACTOR. ALPINE ENGINEERED PRODUCTS, INC. SHALL NOT BE RESPONSIBLE FOR ANY DEVIATION FROM THIS DESIGN; ANY FAILURE TO BUILD THE TRUSS IN CONFORMANCE WITH TPI; OR FABRICATING, HANDLING, SHIPPING, INSTALLING & BRACING OF TRUSSES. DESIGN CONFORMS WITH APPLICABLE PROVISIONS OF NDS (NATIONAL DESIGN SPEC. BY AF&PA) AND TPI. ALPINE CONNECTOR PLATES ARE MADE OF 20/18/16GA (W,H/S/K) ASTM A653 GRADE 40/60 (W, K/H,S) GALV. STEEL. APPLY PLATES TO EACH FACE OF TRUSS AND, UNLESS OTHERWISE LOCATED ON THIS DESIGN, POSITION PER DRAWINGS 160A-Z. ANY INSPECTION OF PLATES FOLLOWED BY (I) SHALL BE PER ANNEX A3 OF TPI1-2002 SEC.3. A SEAL ON THIS DRAWING INDICATES ACCEPTANCE OF PROFESSIONAL ENGINEERING RESPONSIBILITY SOLELY FOR THE TRUSS COMPONENT DESIGN SHOWN. THE SUITABILITY AND USE OF THIS COMPONENT FOR ANY BUILDING IS THE RESPONSIBILITY OF THE BUILDING DESIGNER PER ANSI/TPI 1 SEC. 2.

JAMES F. COLLINS, JR. LICENSE No. 52212 STATE OF FLORIDA PROFESSIONAL ENGINEER

Oct 17

TC LL	20.0 PSF	REF	R215-- 46961
TC DL	10.0 PSF	DATE	10/16/06
BC DL	10.0 PSF	DRW	HCUSR215 06289314
BC LL	0.0 PSF	HC-ENG	DAB/AP
TOT.LD.	40.0 PSF	SEQN-	29406
DUR.FAC.	1.25	FROM	CAW
SPACING	24.0"	JREF-	1T1I215_Z07

BEARING BLOCK NAIL SPACING DETAIL

MINIMUM SPACING FOR SINGLE BEARING BLOCK IS SHOWN. DOUBLE NAIL SPACINGS AND STAGGER NAILING FOR TWO BLOCKS. GREATER SPACING MAY BE REQUIRED TO AVOID SPLITTING.

A – EDGE DISTANCE AND SPACING BETWEEN STAGGERED ROWS OF NAILS (6 NAIL DIAMETERS)
B – SPACING OF NAILS IN A ROW (12 NAIL DIAMETERS)
C – END DISTANCE (15 NAIL DIAMETERS)

IF NAIL HOLES ARE PREBORED, SOME SPACING MAY BE REDUCED BY THE AMOUNTS GIVEN BELOW:
- • SPACING MAY BE REDUCED BY 50%
- •• SPACING MAY BE REDUCED BY 33%

BEARING BLOCK TO BE SAME SIZE AND SPECIES AS BOTTOM CHORD. BLOCKS MAY BE ANY GRADE WITHIN THE SPECIES, PROVIDED THE COMPRESSION PERPENDICULAR TO GRAIN VALUE (Fc–perp) IS AT LEAST THAT OF THE CHORD.

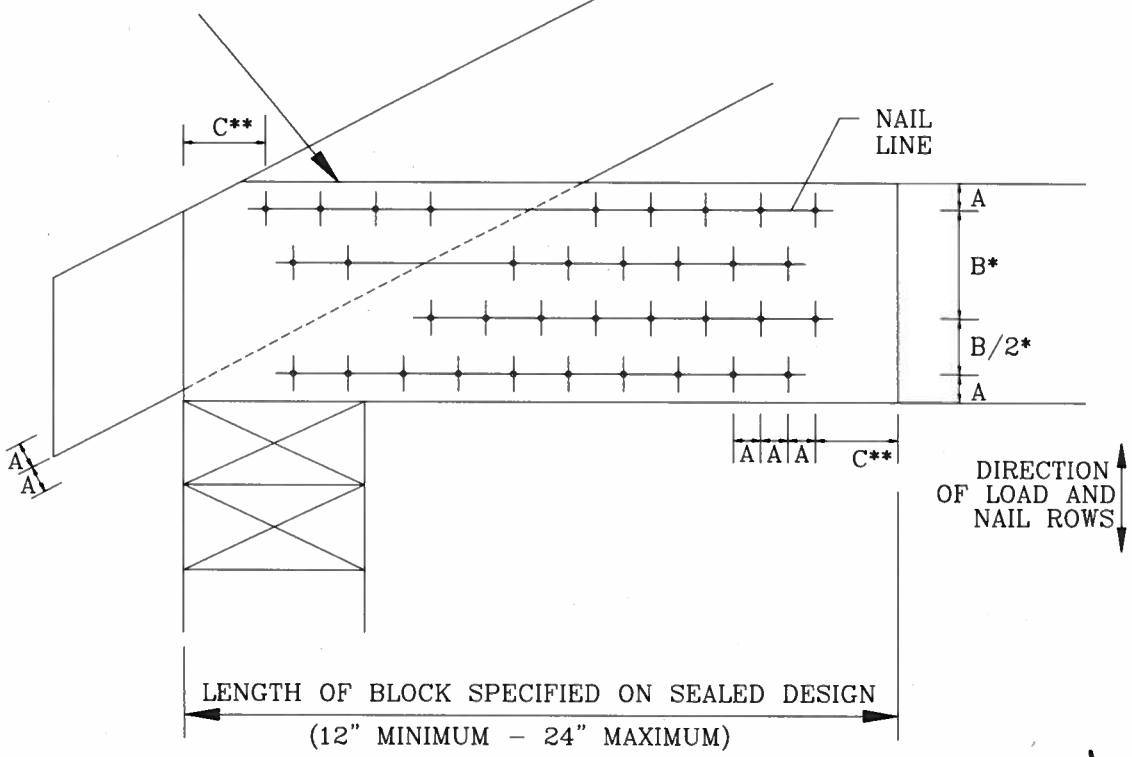

MAXIMUM NUMBER OF NAIL LINES PARALLEL TO GRAIN

NAIL TYPE	CHORD SIZE 2X4	2X6	2X8	2X10	2X12
8d BOX (0.113"X2.5")	3	6	9	12	15
10d BOX (0.128"X3")	3	5	7	10	12
12d BOX (0.128"X3.25")	3	5	7	10	12
16d BOX (0.135"X3.5")	3	5	7	10	12
20d BOX (0.148"X4")	2	4	5	6	8
8d COMMON (0.131"X2.5")	3	5	7	10	12
10d COMMON (0.148"X3")	2	4	6	8	10
12d COMMON (0.148"X3.25")	2	4	6	8	10
16d COMMON (0.162"X3.5")	2	4	6	8	10
0.120"X2.5" GUN	3	6	8	11	14
0.131"X2.5" GUN	3	5	7	10	12
0.120"X3.0" GUN	3	6	8	11	14
0.131"x3.0" GUN	3	5	7	10	12

MINIMUM NAIL SPACING DISTANCES

NAIL TYPE	DISTANCES A	B*	C**
8d BOX (0.113"X2.5")	3/4"	1 3/8"	1 3/4"
10d BOX (0.128"X3")	7/8"	1 5/8"	2"
12d BOX (0.128"X3.25")	7/8"	1 5/8"	2"
16d BOX (0.135"X3.5")	7/8"	1 5/8"	2 1/8"
20d BOX (0.148"X4")	1"	1 7/8"	2 1/4"
8d COMMON (0.131"X2.5")	7/8"	1 5/8"	2"
10d COMMON (0.148"X3")	1"	1 7/8"	2 1/4"
12d COMMON (0.148"X3.25")	1"	1 7/8"	2 1/4"
16d COMMON (0.162"X3.5")	1'	2"	2 1/2"
0.120"X2.5" GUN	3/4"	1 1/2"	1 7/8"
0.131"X2.5" GUN	7/8"	1 5/8"	2"
0.120"X3.0" GUN	3/4"	1 1/2"	1 7/8"
0.131"x3.0" GUN	7/8"	1 5/8"	2"

THIS DRAWING REPLACES DRAWING B139 AND CNBRGBLK0699

ALPINE

ALPINE ENGINEERED PRODUCTS, INC.
POMPANO BEACH, FLORIDA

WARNING TRUSSES REQUIRE EXTREME CARE IN FABRICATING, HANDLING, SHIPPING, INSTALLING AND BRACING. REFER TO BCSI 1-03 (BUILDING COMPONENT SAFETY INFORMATION), PUBLISHED BY TPI (TRUSS PLATE INSTITUTE, 583 D'ONOFRIO DR., SUITE 200, MADISON, WI. 53719) AND WTCA (WOOD TRUSS COUNCIL OF AMERICA, 6300 ENTERPRISE LN, MADISON, WI 53719) FOR SAFETY PRACTICES PRIOR TO PERFORMING THESE FUNCTIONS. UNLESS OTHERWISE INDICATED, TOP CHORD SHALL HAVE PROPERLY ATTACHED STRUCTURAL PANELS AND BOTTOM CHORD SHALL HAVE A PROPERLY ATTACHED RIGID CEILING.

IMPORTANT FURNISH COPY OF THIS DESIGN TO INSTALLATION CONTRACTOR. ALPINE ENGINEERED PRODUCTS, INC., SHALL NOT BE RESPONSIBLE FOR ANY DEVIATION FROM THIS DESIGN; ANY FAILURE TO BUILD THE TRUSS IN CONFORMANCE WITH TPI; OR FABRICATING, HANDLING, SHIPPING, INSTALLING & BRACING OF TRUSSES. DESIGN CONFORMS WITH APPLICABLE PROVISIONS OF NDS (NATIONAL DESIGN SPEC, BY AF&PA) AND TPI. ALPINE CONNECTOR PLATES ARE MADE OF 20/18/16GA (W,H/S/K) ASTM A653 GRADE 40/60 (W,K/H,S) GALV. STEEL. APPLY PLATES TO EACH FACE OF TRUSS AND, UNLESS OTHERWISE LOCATED ON THIS DESIGN, POSITION PER DRAWINGS 160A-Z. ANY INSPECTION OF PLATES FOLLOWED BY (I) SHALL BE PER ANNEX A3 OF TPI 1-2002 SEC. 3. A SEAL ON THIS DRAWING INDICATES ACCEPTANCE OF PROFESSIONAL ENGINEERING RESPONSIBILITY SOLELY FOR THE TRUSS COMPONENT DESIGN SHOWN. THE SUITABILITY AND USE OF THIS COMPONENT FOR ANY BUILDING IS THE RESPONSIBILITY OF THE BUILDING DESIGNER, PER ANSI/TPI 1 SEC. 2.

Oct 11 06

JAMES F. COLLINS, JR. LICENSE No. 52212 STATE OF FLORIDA PROFESSIONAL ENGINEER

REF	BEARING BLOCK
DATE	11/26/03
DRWG	CNBRGBLK1103
–ENG	SJP/KAR

CLB WEB BRACE SUBSTITUTION

THIS DETAIL IS TO BE USED WHEN CONTINUOUS LATERAL BRACING (CLB) IS SPECIFIED ON AN ALPINE TRUSS DESIGN BUT AN ALTERNATIVE WEB BRACING METHOD IS DESIRED.

NOTES:

THIS DETAIL IS ONLY APPLICABLE FOR CHANGING THE SPECIFIED CLB SHOWN ON SINGLE PLY SEALED DESIGNS TO T-BRACING OR SCAB BRACING.

ALTERNATIVE BRACING SPECIFIED IN CHART BELOW MAY BE CONSERVATIVE. FOR MINIMUM ALTERNATIVE BRACING, RE-RUN DESIGN WITH APPROPRIATE BRACING.

WEB MEMBER SIZE	SPECIFIED CLB BRACING	ALTERNATIVE BRACING T OR L-BRACE	ALTERNATIVE BRACING SCAB BRACE
2X3 OR 2X4	1 ROW	2X4	1-2X4
2X3 OR 2X4	2 ROWS	2X6	2-2X4
2X6	1 ROW	2X4	1-2X6
2X6	2 ROWS	2X6	2-2X4(*)
2X8	1 ROW	2X6	1-2X8
2X8	2 ROWS	2X6	2-2X6(*)

T-BRACE, L-BRACE AND SCAB BRACE TO BE SAME SPECIES AND GRADE OR BETTER THAN WEB MEMBER UNLESS SPECIFIED OTHERWISE ON ENGINEER'S SEALED DESIGN.

(*) CENTER SCAB ON WIDE FACE OF WEB. APPLY (1) SCAB TO EACH FACE OF WEB.

T-BRACING OR L-BRACING:

APPLY TO EITHER SIDE OF WEB NARROW FACE

ATTACH WITH 16d NAILS AT 6" O.C.

BRACE IS A MINIMUM 80% OF WEB MEMBER LENGTH

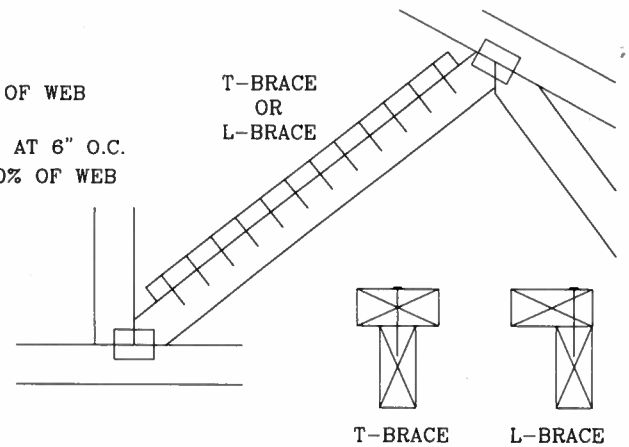

SCAB BRACING:

APPLY SCAB(S) TO WIDE FACE OF WEB.

NO MORE THAN (1) SCAB PER FACE.

ATTACH WITH 10d OR .128"x3" GUN NAILS AT 6" O.C. BRACE IS A MINIMUM 80% OF WEB MEMBER LENGTH

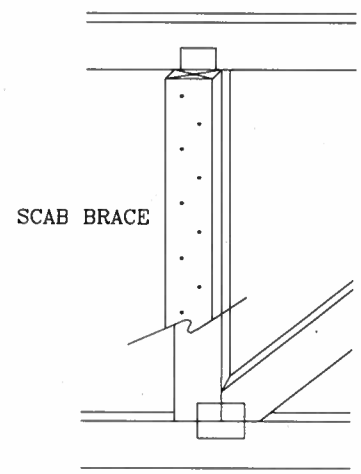

THIS DRAWING REPLACES DRAWING 579,640

ALPINE

ALPINE ENGINEERED PRODUCTS, INC.
POMPANO BEACH, FLORIDA

WARNING TRUSSES REQUIRE EXTREME CARE IN FABRICATING, HANDLING, SHIPPING, INSTALLING AND BRACING. REFER TO BCSI 1-03 (BUILDING COMPONENT SAFETY INFORMATION), PUBLISHED BY TPI (TRUSS PLATE INSTITUTE, 583 D'ONOFRIO DR., SUITE 200, MADISON, WI. 53719) AND WTCA (WOOD TRUSS COUNCIL OF AMERICA, 6300 ENTERPRISE LN, MADISON, WI 53719) FOR SAFETY PRACTICES PRIOR TO PERFORMING THESE FUNCTIONS. UNLESS OTHERWISE INDICATED, TOP CHORD SHALL HAVE PROPERLY ATTACHED STRUCTURAL PANELS AND BOTTOM CHORD SHALL HAVE A PROPERLY ATTACHED RIGID CEILING.

IMPORTANT FURNISH COPY OF THIS DESIGN TO INSTALLATION CONTRACTOR. ALPINE ENGINEERED PRODUCTS, INC., SHALL NOT BE RESPONSIBLE FOR ANY DEVIATION FROM THIS DESIGN; ANY FAILURE TO BUILD THE TRUSS IN CONFORMANCE WITH TPI; OR FABRICATING, HANDLING, SHIPPING, INSTALLING & BRACING OF TRUSSES. DESIGN CONFORMS WITH APPLICABLE PROVISIONS OF NDS (NATIONAL DESIGN SPEC. BY AF&PA) AND TPI. ALPINE CONNECTOR PLATES ARE MADE OF 20/18/16GA (W,H/S/K) ASTM A653 GRADE 40/60 (W,K/H,S) GALV. STEEL. APPLY PLATES TO EACH FACE OF TRUSS AND, UNLESS OTHERWISE LOCATED ON THIS DESIGN, POSITION PER DRAWINGS 160A-Z. ANY INSPECTION OF PLATES FOLLOWED BY (I) SHALL BE PER ANNEX A3 OF TPI 1-2002 SEC. 3. A SEAL ON THIS DRAWING INDICATES ACCEPTANCE OF PROFESSIONAL ENGINEERING RESPONSIBILITY SOLELY FOR THE TRUSS COMPONENT DESIGN SHOWN. THE SUITABILITY AND USE OF THIS COMPONENT FOR ANY BUILDING IS THE RESPONSIBILITY OF THE BUILDING DESIGNER, PER ANSI/TPI 1 SEC. 2.

JAMES F. COLLINS, JR. LICENSE No. 52212 STATE OF FLORIDA PROFESSIONAL ENGINEER

TC LL	PSF	REF CLB SUBST.
TC DL	PSF	DATE 11/26/03
BC DL	PSF	DRWG BRCLBSUB1103
BC LL	PSF	-ENG MLH/KAR
TOT. LD.	PSF	
DUR. FAC.		
SPACING		

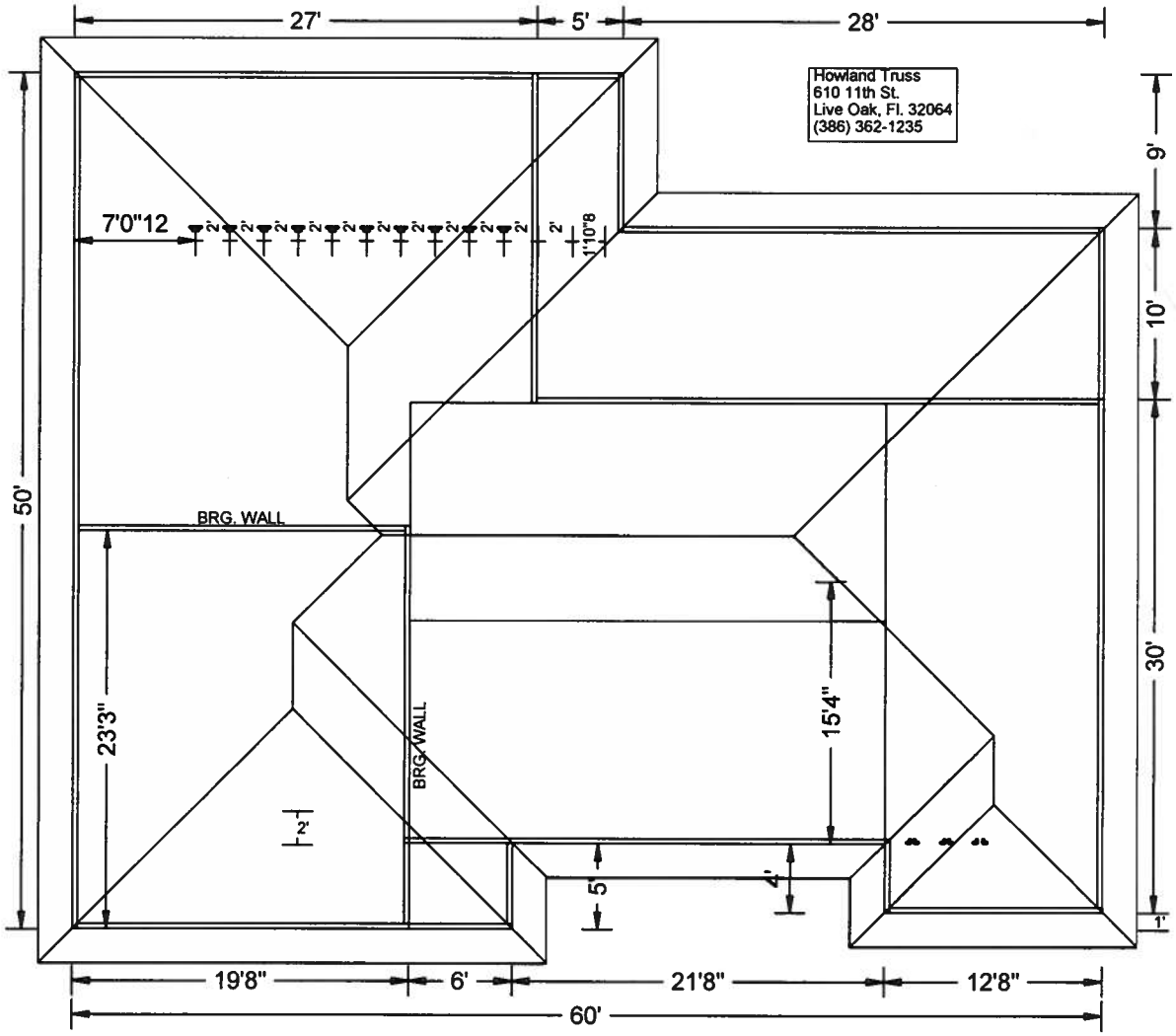

DATE: 10/2/06
ROOF PITCH:4/12
CLG PITCH:2/12 VAULT
OVERHANG:2'
LOADING:40/SHGL
WIND LOAD:110
EXT WALLS:2X4 FRAME, 8' HT.
**NOT SPECIFIED ON PLAN, NOTIFY PRE-BUILD IF 2X4 IS NOT CORRECT

BRG WALLS: (2) INTERIOR NOTED

ROOF & FLOOR TRUSS QUOTES DO NOT INCLUDE BEAMS, LVLS, AND/OR GLULAMS.

PLEASE REVIEW LAYOUT AND DRAWINGS CAREFULLY AS TRUSSES WILL BE BUILT IN STRICT ACCORDANCE WITH THIS LAYOUT.

REVISED LAYOUT: 10/16/06
PER CUSTOMER REQUEST VALLEY AREAS HAVE BEEN BUILT INTO TRUSSES WHERE POSSIBLE. VALLEY AREAS ARE TOO SHALLOW FOR ACTUAL VALLEY TRUSSES...

Job Name: NORTHRUP RESIDENCE
Customer: OWNER BUILDER
Designer: Cindy Gude-Weitzel

JOB NO:
3945

PAGE NO:
1 OF 1

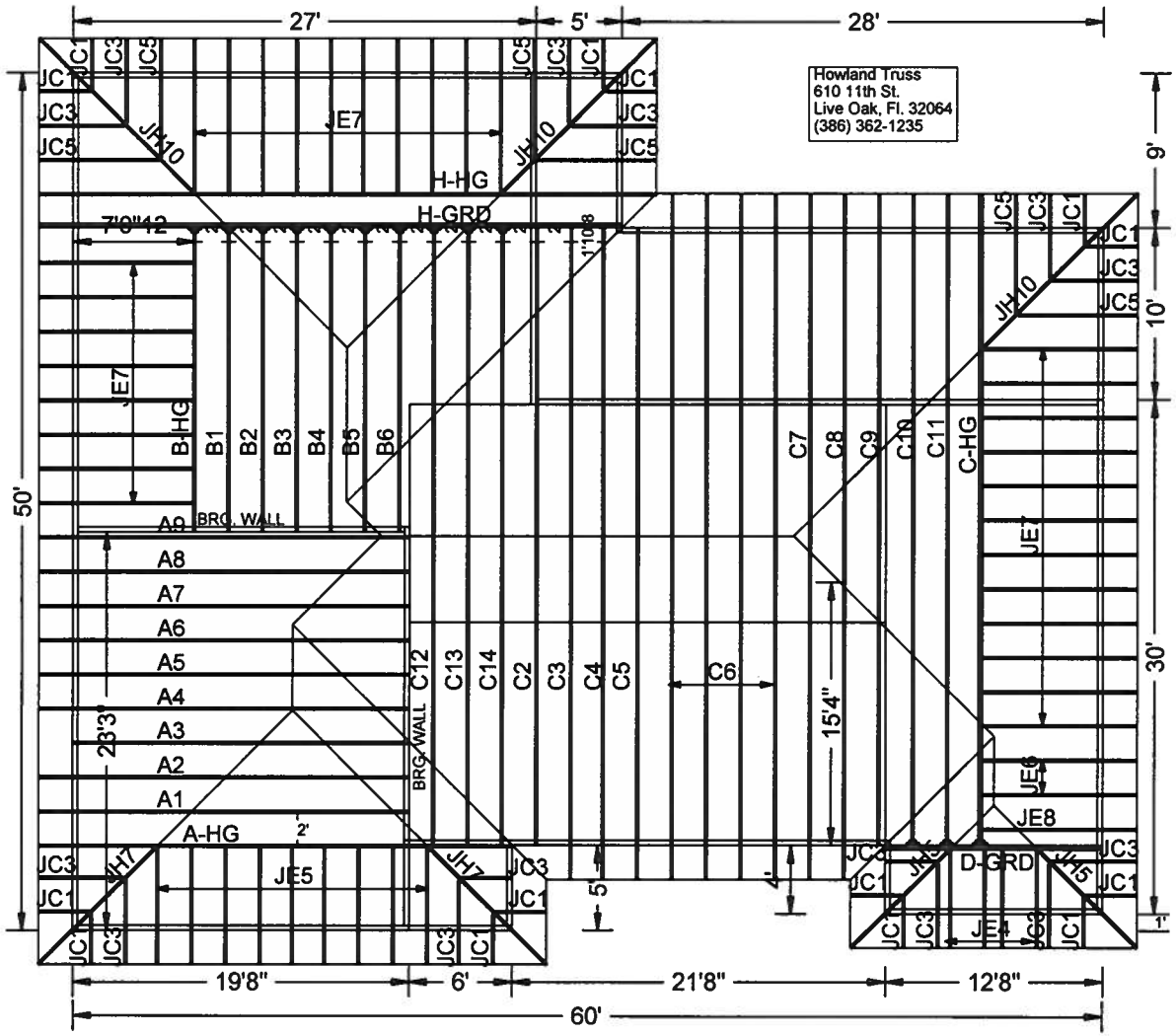

Howland Truss
610 11th St.
Live Oak, Fl. 32064
(386) 362-1235

DATE: 10/2/06
ROOF PITCH:4/12
CLG PITCH:2/12 VAULT
OVERHANG:2'
LOADING:40/SHGL
WIND LOAD:110
EXT WALLS:2X4 FRAME, 8' HT.
**NOT SPECIFIED ON PLAN, NOTIFY PRE-BUILD IF 2X4 IS NOT CORRECT

BRG WALLS: (2) INTERIOR NOTED

ROOF & FLOOR TRUSS QUOTES DO NOT INCLUDE BEAMS, LVLS, AND/OR GLULAMS.

PLEASE REVIEW LAYOUT AND DRAWINGS CAREFULLY AS TRUSSES WILL BE BUILT IN STRICT ACCORDANCE WITH THIS LAYOUT.

REVISED LAYOUT: 10/16/06
PER CUSTOMER REQUEST VALLEY AREAS HAVE BEEN BUILT INTO TRUSSES WHERE POSSIBLE. VALLEY AREAS ARE TOO SHALLOW FOR ACTUAL VALLEY TRUSSES...

Job Name: NORTHRUP RESIDENCE
Customer: OWNER BUILDER
Designer: Cindy Gude-Weitzel

JOB NO:
3945

PAGE NO:
1 OF 1