DATE 11/14/2005

Columbia County Building Permit

This Permit Expires One Year From the Date of Issue

PERMIT
000023846

APPLICANT BRENDA TERRY PHONE 755.8699

ADDRESS POB 3535 LAKE CITY FL 32056

OWNER EARL SAVAGE PHONE 386.963.3538

ADDRESS 176 SW PHILLIPS CIRCLE LAKE CITY FL 32024

CONTRACTOR WILLIAM G. WOOD PHONE 755.2411

LOCATION OF PROPERTY 90-W TO C-252 TP C-252-B,TL GO ABOUT 1 MILE,TR IN S/D,2ND ON L, PHILLIPS CIRCLE @ LOT 34.

TYPE DEVELOPMENT SFD/UTILITY ESTIMATED COST OF CONSTRUCTION 86900.00

HEATED FLOOR AREA 1738.00 TOTAL AREA 2559.00 HEIGHT 18.50 STORIES 1

FOUNDATION CONC WALLS FRAMED ROOF PITCH 6'12 FLOOR CONC

LAND USE & ZONING RSF-2 MAX. HEIGHT 35

Minimum Set Back Requirments: STREET-FRONT 25.00 REAR 15.00 SIDE 10.00

NO. EX.D.U. 0 FLOOD ZONE XPP DEVELOPMENT PERMIT NO.

PARCEL ID 03-4S-16-02739-234 SUBDIVISION TURKEY RUN

LOT 34 BLOCK PHASE UNIT TOTAL ACRES .50

000000885		CBC058182	Brenda Terry
Culvert Permit No.	Culvert Waiver	Contractor's License Number	Applicant/Owner/Contractor

18"X32'MITERED	05-119-N	BLK	JTH	N
Driveway Connection	Septic Tank Number	LU & Zoning checked by	Approved for Issuance	New Resident

COMMENTS: NOC ON FILE
1 FOOT ABOVE RD.

Check # or Cash 3013

FOR BUILDING & ZONING DEPARTMENT ONLY

(footer/Slab)

Temporary Power _____ date/app. by

Foundation _____ date/app. by

Monolithic _____ date/app. by

Under slab rough-in plumbing _____ date/app. by

Slab _____ date/app. by

Sheathing/Nailing _____ date/app. by

Framing _____ date/app. by

Rough-in plumbing above slab and below wood floor _____ date/app. by

Electrical rough-in _____ date/app. by

Heat & Air Duct _____ date/app. by

Peri. beam (Lintel) _____ date/app. by

Permanent power _____ date/app. by

C.O. Final _____ date/app. by

Culvert _____ date/app. by

M/H tie downs, blocking, electricity and plumbing _____ date/app. by

Pool _____ date/app. by

Reconnection _____ date/app. by

Pump pole _____ date/app. by

Utility Pole _____ date/app. by

M/H Pole _____ date/app. by

Travel Trailer _____ date/app. by

Re-roof _____ date/app. by

BUILDING PERMIT FEE $ 435.00 CERTIFICATION FEE $ 12.80 SURCHARGE FEE $ 12.80

MISC. FEES $ .00 ZONING CERT. FEE $ 50.00 FIRE FEE $ .00 WASTE FEE $

FLOOD DEVELOPMENT FEE $ FLOOD ZONE FEE $ 25.00 CULVERT FEE $ 25.00 **TOTAL FEE** 560.60

INSPECTORS OFFICE CLERKS OFFICE CH

NOTICE: IN ADDITION TO THE REQUIREMENTS OF THIS PERMIT, THERE MAY BE ADDITIONAL RESTRICTIONS APPLICABLE TO THIS PROPERTY THAT MAY BE FOUND IN THE PUBLIC RECORDS OF THIS COUNTY. AND THERE MAY BE ADDITIONAL PERMITS REQUIRED FROM OTHER GOVERNMENTAL ENTITIES SUCH AS WATER MANAGEMENT DISTRICTS, STATE AGENCIES, OR FEDERAL AGENCIES.

"WARNING TO OWNER: YOUR FAILURE TO RECORD A NOTICE OF COMMENCEMENT MAY RESULT IN YOUR PAYING TWICE FOR IMPROVEMENTS TO YOUR PROPERTY. IF YOU INTEND TO OBTAIN FINANCING, CONSULT WITH YOUR LENDER OR AN ATTORNEY BEFORE RECORDING YOUR NOTICE OF COMMENCEMENT."

This Permit Must Be Prominently Posted on Premises During Construction

PLEASE NOTIFY THE COLUMBIA COUNTY BUILDING DEPARTMENT AT LEAST 24 HOURS IN ADVANCE OF EACH INSPECTION, IN ORDER THAT IT MAY BE MADE WITHOUT DELAY OR INCONVIENCE, PHONE 758-1008. THIS PERMIT IS NOT VALID UNLESS THE WORK AUTHORIZED BY IT IS COMMENCED WITHIN 6 MONTHS AFTER ISSUANCE.

The Issuance of this Permit Does Not Waive Compliance by Permittee with Deed Restrictions.

Application for Onsite Sewage Disposal System Construction Permit. Part II Site Plan

Permit Application Number: 05-1119N

ALL CHANGES MUST BE APPROVED BY THE COUNTY HEALTH UNIT

SAVAGE/CR 05-3150

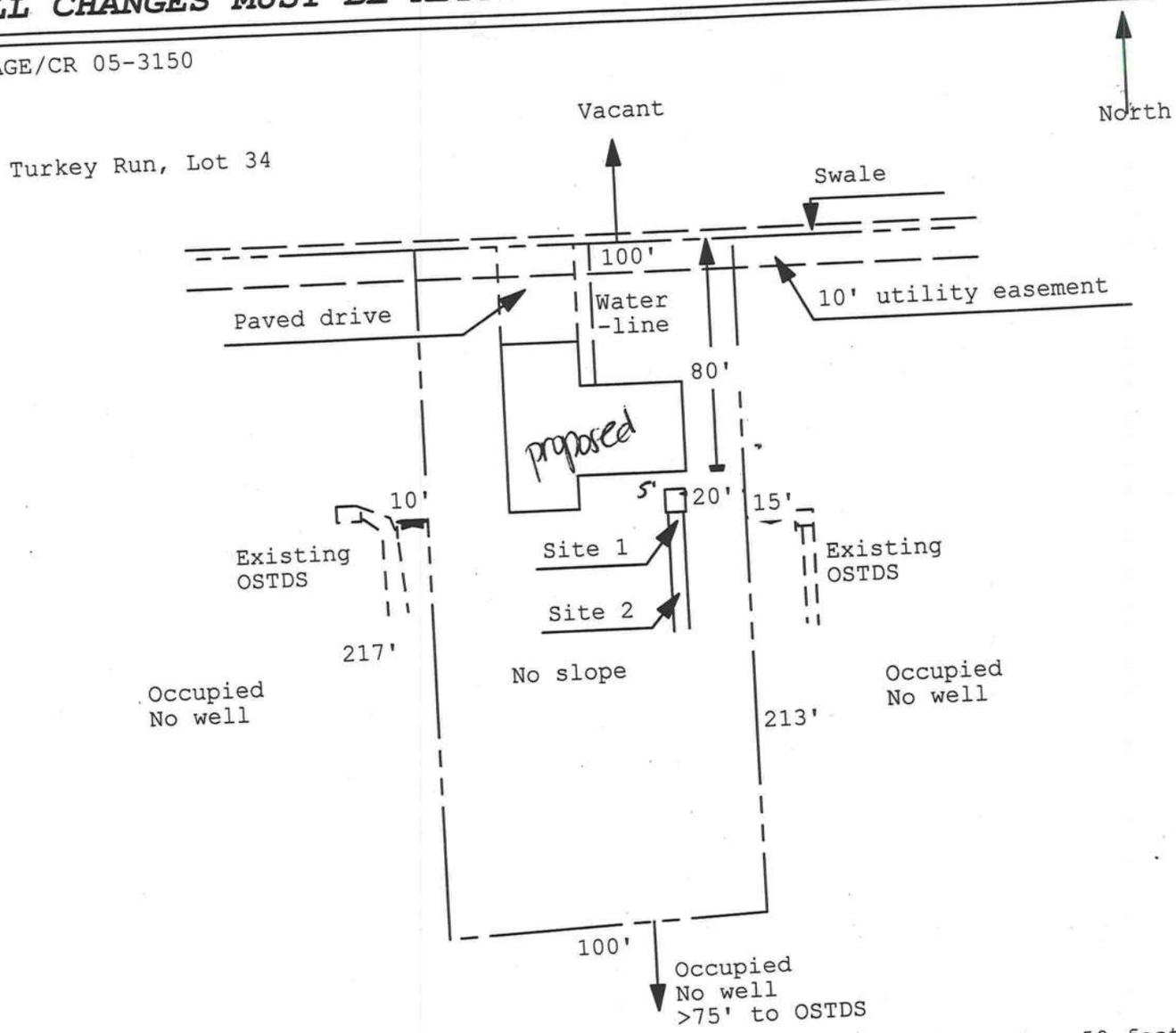

1 inch = 50 feet

Site Plan Submitted By Paul Lapp Date 10/14/05

Plan Approved X Not Approved ____ Date ____

By Sallie Gradey - EST - COLUMBIA CPHU

Notes: ____

Site Plan
Lot 34

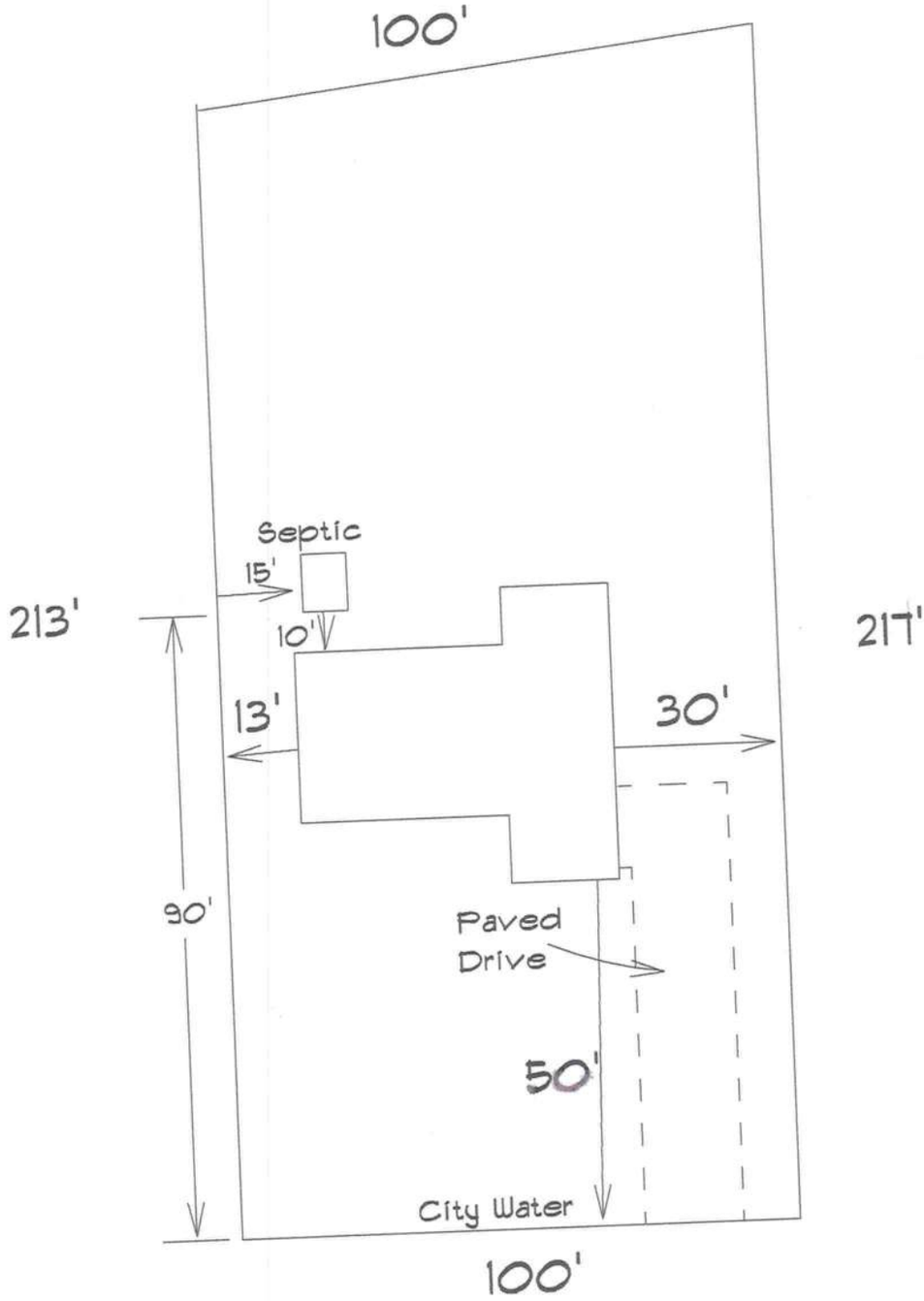

Front

Columbia County Building Permit Application

CK# 3013 Revised 9-23-04

For Office Use Only Application # 0510-90 Date Received 10/31/05 By CH Permit # 885 / 23846

Application Approved by - Zoning Official BLK Date 03.11.05 Plans Examiner OK JTH Date 11-10-05

Flood Zone X per PLAT Development Permit N/A Zoning RSF-2 Land Use Plan Map Category RES. LOW DEN.

Comments

- 05-119-N

Applicants Name Brenda Terry Phone 755-8699

Address PO Box 3535 LAKE City, FL 32056

Owners Name Earl Savage Phone 963-3538

911 Address 176 SW Phillips Circle LAKE City, FL 32024

Contractors Name Woodman Park Builders Phone 755-2411

Address PO Box 3535 LAKE City, FL 32056

Fee Simple Owner Name & Address N/A

Bonding Co. Name & Address N/A

Architect/Engineer Name & Address Mark Disosway Engineering

Mortgage Lenders Name & Address N/A

Circle the correct power company - FL Power & Light - (Clay Elec.) - Suwannee Valley Elec. - Progressive Energy

Property ID Number 03-4S-16-02739-234 Estimated Cost of Construction 86,900.00

Subdivision Name Turkey Run Subdivision Lot 34 Block ____ Unit ____ Phase ____

Driving Directions Hwy 90 West to 252-B go about a mile turn Right in turkey Run 2nd lot on left SW Phillips Circle lot 34

Type of Construction Frame + Brick Home Number of Existing Dwellings on Property 0

Total Acreage .5 Lot Size ____ Do you need a - (Culvert Permit) or Culvert Waiver or Have an Existing Drive

Actual Distance of Structure from Property Lines - Front 50' Side 13' Side 30' Rear 123'

Total Building Height 18' 5 1/2" Number of Stories 1 Heated Floor Area 1,738 SQ FT Roof Pitch 6/12

Porches 312 GARAGE 509 TOTAL 2559

Application is hereby made to obtain a permit to do work and installations as indicated. I certify that no work or installation has commenced prior to the issuance of a permit and that all work be performed to meet the standards of all laws regulating construction in this jurisdiction.

OWNERS AFFIDAVIT: I hereby certify that all the foregoing information is accurate and all work will be done in compliance with all applicable laws and regulating construction and zoning.

WARNING TO OWNER: YOUR FAILURE TO RECORD A NOTICE OF COMMENCMENT MAY RESULT IN YOU PAYING TWICE FOR IMPROVEMENTS TO YOUR PROPERTY. IF YOU INTEND TO OBTAIN FINANCING, CONSULT WITH YOUR LENDER OR ATTORNEY BEFORE RECORDING YOUR NOTICE OF COMMENCEMENT.

Brenda Terry
Owner Builder or Agent (Including Contractor)

Contractor Signature
Contractors License Number CB-C058182
Competency Card Number
NOTARY STAMP/SEAL

STATE OF FLORIDA
COUNTY OF COLUMBIA

Sworn to (or affirmed) and subscribed before me this 19 day of October 20 05.

Personally known ✓ or Produced Identification ____

Brenda Terry
Notary Signature

Brenda Terry
My Commission DD293888
Expires February 24, 2008

Columbia County Building Department
Culvert Permit

Culvert Permit No.
000000885

DATE 11/14/2005 PARCEL ID # 03-4S-16-02739-234

APPLICANT BRENDA TERRY PHONE 386.755.8699

ADDRESS POB 3535 LKAE CITY FL 32056

OWNER EARL SAVAGE PHONE 963.3538

ADDRESS 176 SW PHILIIPS CIRCLE LAKE CITY FL 32024

CONTRACTOR WILLIAM G. WOOD PHONE CBC058182

LOCATION OF PROPERTY 90-W TO C-252-B GO ABOUT 1 MILE,TURN R INTO S/D,2ND LOT ON L, PHILLIPS CIRCLE @ LOT 34

SUBDIVISION/LOT/BLOCK/PHASE/UNIT TURKEY RUN 34

SIGNATURE ✓ Brenda Terry

INSTALLATION REQUIREMENTS

[X] Culvert size will be 18 inches in diameter with a total lenght of 32 feet, leaving 24 feet of driving surface. Both ends will be mitered 4 foot with a 4 : 1 slope and poured with a 4 inch thick reinforced concrete slab.

INSTALLATION NOTE: Turnouts will be required as follows:
a) a majority of the current and existing driveway turnouts are paved, or;
b) the driveway to be served will be paved or formed with concrete.
Turnouts shall be concrete or paved a minimum of 12 feet wide or the width of the concrete or paved driveway, whichever is greater. The width shall conform to the current and existing paved or concreted turnouts.

[ ] Culvert installation shall conform to the approved site plan standards.

[ ] Department of Transportation Permit installation approved standards.

[ ] Other _____

ALL PROPER SAFETY REQUIREMENTS SHOULD BE FOLLOWED DURING THE INSTALATION OF THE CULVERT.

135 NE Hernando Ave., Suite B-21
Lake City, FL 32055
Phone: 386-758-1008 Fax: 386-758-2160

Amount Paid 25.00

COLUMBIA COUNTY · GATEWAY TO FLORIDA

FORM 600A-2001

FLORIDA ENERGY EFFICIENCY CODE FOR BUILDING CONSTRUCTION

Florida Department of Community Affairs

Residential Whole Building Performance Method A

Project Name:	TURKEY RUN LOT 34	Builder:	WOODMAN PARK
Address:		Permitting Office:	COLUMBIA COUNTY
City, State:	,	Permit Number:	23846
Owner:		Jurisdiction Number:	221000
Climate Zone:	North		

1. New construction or existing		New	—
2. Single family or multi-family		Single family	—
3. Number of units, if multi-family		1	—
4. Number of Bedrooms		3	—
5. Is this a worst case?		No	—
6. Conditioned floor area (ft²)		1738 ft²	—
7. Glass area & type	Single Pane	Double Pane	
a. Clear glass, default U-factor	42.0 ft²	120.0 ft²	—
b. Default tint, default U-factor	0.0 ft²	0.0 ft²	—
c. Labeled U-factor or SHGC	0.0 ft²	0.0 ft²	—
8. Floor types			
a. Slab-On-Grade Edge Insulation		R=0.0, 157.5(p) ft	—
b. N/A			—
c. N/A			—
9. Wall types			
a. Frame, Wood, Exterior		R=13.2, 1077.0 ft²	—
b. Frame, Wood, Adjacent		R=12.9, 286.0 ft²	—
c. N/A			—
d. N/A			—
e. N/A			—
10. Ceiling types			
a. Under Attic		R=30.0, 1737.7 ft²	—
b. N/A			—
c. N/A			—
11. Ducts			
a. Sup: Unc. Ret: Unc. AH: Garage		Sup. R=6.0, 46.0 ft	—
b. N/A			—

12. Cooling systems		
a. Central Unit	Cap: 36.0 kBtu/hr	—
	SEER: 12.00	—
		—
b. N/A		—
		—
c. N/A		—
13. Heating systems		
a. PTHP	Cap: 36.0 kBtu/hr	—
	COP: 3.40	—
		—
b. N/A		—
		—
c. N/A		—
14. Hot water systems		
a. Electric Resistance	Cap: 40.0 gallons	—
	EF: 0.90	—
		—
b. N/A		—
		—
c. Conservation credits (HR-Heat recovery, Solar DHP-Dedicated heat pump)		—
15. HVAC credits (CF-Ceiling fan, CV-Cross ventilation, HF-Whole house fan, PT-Programmable Thermostat, MZ-C-Multizone cooling, MZ-H-Multizone heating)		

Glass/Floor Area: 0.09

Total as-built points: 20958

Total base points: 26653

PASS

I hereby certify that the plans and specifications covered by this calculation are in compliance with the Florida Energy Code.

PREPARED BY: Larry Resmondo Ak

DATE: October 13, 2005

I hereby certify that this building, as designed, is in compliance with the Florida Energy Code.

OWNER/AGENT: _____

DATE: _____

Review of the plans and specifications covered by this calculation indicates compliance with the Florida Energy Code. Before construction is completed this building will be inspected for compliance with Section 553.908 Florida Statutes.

GREAT SEAL OF THE STATE OF FLORIDA — IN GOD WE TRUST

BUILDING OFFICIAL: _____

DATE: _____

SUMMER CALCULATIONS

Residential Whole Building Performance Method A - Details

ADDRESS: , , ,

PERMIT #:

BASE

GLASS TYPES .18 X Conditioned Floor Area	X BSPM	= Points
.18 1738.0	20.04	6269.3

WALL TYPES	Area X BSPM	= Points
Adjacent 286.0	0.70	200.2
Exterior 1077.0	1.70	1830.9
Base Total: 1363.0		2031.1

DOOR TYPES	Area X BSPM	= Points
Adjacent 21.0	2.40	50.4
Exterior 21.0	6.10	128.1
Base Total: 42.0		178.5

CEILING TYPES	Area X BSPM	= Points
Under Attic 1737.7	1.73	3006.2
Base Total: 1737.7		3006.2

FLOOR TYPES	Area X BSPM	= Points
Slab 157.5(p)	-37.0	-5827.5
Raised 0.0	0.00	0.0
Base Total:		-5827.5

INFILTRATION	Area X BSPM	= Points
1738.0	10.21	17745.0

AS-BUILT

Type/SC	Overhang Ornt	Len	Hgt	Area X	SPM X	SOF	= Points
Double, Clear	W	1.3	6.0	40.0	38.52	0.93	1440.5
Single, Clear	E	10.0	8.0	42.0	47.92	0.46	932.1
Double, Clear	E	1.3	6.0	50.0	42.06	0.93	1964.9
Double, Clear	E	4.0	6.0	20.0	42.06	0.63	529.1
Double, Clear	NE	7.0	6.0	10.0	29.56	0.55	162.3
As-Built Total:				162.0			5029.0

Type	R-Value	Area X	SPM	= Points
Frame, Wood, Exterior	13.2	1077.0	1.48	1594.0
Frame, Wood, Adjacent	12.9	286.0	0.61	173.0
As-Built Total:		1363.0		1767.0

Type	Area X	SPM	= Points
Exterior Wood	21.0	6.10	128.1
Adjacent Wood	21.0	2.40	50.4
As-Built Total:	42.0		178.5

Type	R-Value	Area X	SPM X SCM =	Points
Under Attic	30.0	1737.7	1.73 X 1.00	3006.2
As-Built Total:		1737.7		3006.2

Type	R-Value	Area X	SPM	= Points
Slab-On-Grade Edge Insulation	0.0	157.5(p	-41.20	-6489.0
As-Built Total:		157.5		-6489.0

	Area X	SPM	= Points
	1738.0	10.21	17745.0

SUMMER CALCULATIONS

Residential Whole Building Performance Method A - Details

ADDRESS: , , , PERMIT #:

BASE				AS-BUILT							
Summer Base Points:			**23402.6**	**Summer As-Built Points:**							**21236.6**
Total Summer Points	X System Multiplier	=	Cooling Points	Total Component	X Cap Ratio	X Duct Multiplier (DM x DSM x AHU)	X System Multiplier	X Credit Multiplier	= Cooling Points		
				21236.6	1.000	(1.090 x 1.147 x 1.00)	0.284	1.000	7551.5		
23402.6	**0.4266**		**9983.6**	**21236.6**	**1.00**	**1.250**	**0.284**	**1.000**	**7551.5**		

WINTER CALCULATIONS

Residential Whole Building Performance Method A - Details

ADDRESS: , , ,

PERMIT #:

BASE

GLASS TYPES

.18 X	Conditioned Floor Area	X BWPM	= Points
.18	1738.0	12.74	3985.6

WALL TYPES	Area	X BWPM	= Points
Adjacent	286.0	3.60	1029.6
Exterior	1077.0	3.70	3984.9
Base Total:	**1363.0**		**5014.5**

DOOR TYPES	Area	X BWPM	= Points
Adjacent	21.0	11.50	241.5
Exterior	21.0	12.30	258.3
Base Total:	**42.0**		**499.8**

CEILING TYPES	Area	X BWPM	= Points
Under Attic	1737.7	2.05	3562.3
Base Total:	**1737.7**		**3562.3**

FLOOR TYPES	Area	X BWPM	= Points
Slab	157.5(p)	8.9	1401.8
Raised	0.0	0.00	0.0
Base Total:			**1401.8**

INFILTRATION	Area	X BWPM	= Points
	1738.0	-0.59	-1025.4

AS-BUILT

Type/SC	Overhang Ornt	Len	Hgt	Area	X WPM	X WOF	= Points
Double, Clear	W	1.3	6.0	40.0	20.73	1.02	843.7
Single, Clear	E	10.0	8.0	42.0	26.41	1.35	1494.9
Double, Clear	E	1.3	6.0	50.0	18.79	1.03	965.9
Double, Clear	E	4.0	6.0	20.0	18.79	1.18	444.7
Double, Clear	NE	7.0	6.0	10.0	23.57	1.05	247.1
As-Built Total:				**162.0**			**3996.2**

Type	R-Value	Area	X WPM	= Points
Frame, Wood, Exterior	13.2	1077.0	3.36	3618.7
Frame, Wood, Adjacent	12.9	286.0	3.32	948.1
As-Built Total:		**1363.0**		**4566.8**

Type	Area	X WPM	= Points
Exterior Wood	21.0	12.30	258.3
Adjacent Wood	21.0	11.50	241.5
As-Built Total:	**42.0**		**499.8**

Type	R-Value	Area	X WPM X WCM	= Points
Under Attic	30.0	1737.7	2.05 X 1.00	3562.3
As-Built Total:		**1737.7**		**3562.3**

Type	R-Value	Area	X WPM	= Points
Slab-On-Grade Edge Insulation	0.0	157.5(p	18.80	2961.0
As-Built Total:		**157.5**		**2961.0**

Area	X WPM	= Points
1738.0	-0.59	-1025.4

WINTER CALCULATIONS

Residential Whole Building Performance Method A - Details

ADDRESS: , , , PERMIT #:

BASE				AS-BUILT							
Winter Base Points:			**13438.5**	**Winter As-Built Points:**							**14560.7**
Total Winter Points	X System Multiplier	=	Heating Points	Total Component	X Cap Ratio	X Duct Multiplier (DM x DSM x AHU)	X System Multiplier	X Credit Multiplier	=	Heating Points	
13438.5	**0.6274**		**8431.3**	14560.7 **14560.7**	1.000 **1.00**	(1.069 x 1.169 x 1.00) **1.250**	0.294 **0.294**	1.000 **1.000**		5351.7 **5351.7**	

WATER HEATING & CODE COMPLIANCE STATUS

Residential Whole Building Performance Method A - Details

ADDRESS: , , , PERMIT #:

BASE				AS-BUILT							
WATER HEATING											
Number of Bedrooms	X	Multiplier	= Total	Tank Volume	EF	Number of Bedrooms	X Tank Ratio	X Multiplier	X Credit Multiplier	= Total	
3		2746.00	8238.0	40.0	0.90	3	1.00	2684.98	1.00	8054.9	
				As-Built Total:						**8054.9**	

CODE COMPLIANCE STATUS

BASE				AS-BUILT			
Cooling Points +	Heating Points +	Hot Water Points =	Total Points	Cooling Points +	Heating Points +	Hot Water Points =	Total Points
9984	**8431**	**8238**	**26653**	**7551**	**5352**	**8055**	**20958**

PASS

Code Compliance Checklist

Residential Whole Building Performance Method A - Details

ADDRESS: , , , PERMIT #:

6A-21 INFILTRATION REDUCTION COMPLIANCE CHECKLIST

COMPONENTS	SECTION	REQUIREMENTS FOR EACH PRACTICE	CHECK
Exterior Windows & Doors	606.1.ABC.1.1	Maximum:.3 cfm/sq.ft. window area; .5 cfm/sq.ft. door area.	
Exterior & Adjacent Walls	606.1.ABC.1.2.1	Caulk, gasket, weatherstrip or seal between: windows/doors & frames, surrounding wall; foundation & wall sole or sill plate; joints between exterior wall panels at corners; utility penetrations; between wall panels & top/bottom plates; between walls and floor. EXCEPTION: Frame walls where a continuous infiltration barrier is installed that extends from, and is sealed to, the foundation to the top plate.	
Floors	606.1.ABC.1.2.2	Penetrations/openings >1/8" sealed unless backed by truss or joint members. EXCEPTION: Frame floors where a continuous infiltration barrier is installed that is sealed to the perimeter, penetrations and seams.	
Ceilings	606.1.ABC.1.2.3	Between walls & ceilings; penetrations of ceiling plane of top floor; around shafts, chases, soffits, chimneys, cabinets sealed to continuous air barrier; gaps in gyp board & top plate; attic access. EXCEPTION: Frame ceilings where a continuous infiltration barrier is installed that is sealed at the perimeter, at penetrations and seams.	
Recessed Lighting Fixtures	606.1.ABC.1.2.4	Type IC rated with no penetrations, sealed; or Type IC or non-IC rated, installed inside a sealed box with 1/2" clearance & 3" from insulation; or Type IC rated with < 2.0 cfm from conditioned space, tested.	
Multi-story Houses	606.1.ABC.1.2.5	Air barrier on perimeter of floor cavity between floors.	
Additional Infiltration reqts	606.1.ABC.1.3	Exhaust fans vented to outdoors, dampers; combustion space heaters comply with NFPA, have combustion air.	

6A-22 OTHER PRESCRIPTIVE MEASURES (must be met or exceeded by all residences.)

COMPONENTS	SECTION	REQUIREMENTS	CHECK
Water Heaters	612.1	Comply with efficiency requirements in Table 6-12. Switch or clearly marked circuit breaker (electric) or cutoff (gas) must be provided. External or built-in heat trap required.	
Swimming Pools & Spas	612.1	Spas & heated pools must have covers (except solar heated). Non-commercial pools must have a pump timer. Gas spa & pool heaters must have a minimum thermal efficiency of 78%.	
Shower heads	612.1	Water flow must be restricted to no more than 2.5 gallons per minute at 80 PSIG.	
Air Distribution Systems	610.1	All ducts, fittings, mechanical equipment and plenum chambers shall be mechanically attached, sealed, insulated, and installed in accordance with the criteria of Section 610. Ducts in unconditioned attics: R-6 min. insulation.	
HVAC Controls	607.1	Separate readily accessible manual or automatic thermostat for each system.	
Insulation	604.1, 602.1	Ceilings-Min. R-19. Common walls-Frame R-11 or CBS R-3 both sides. Common ceiling & floors R-11.	

ENERGY PERFORMANCE LEVEL (EPL) DISPLAY CARD

ESTIMATED ENERGY PERFORMANCE SCORE* = 86.7

The higher the score, the more efficient the home.

1. New construction or existing		New	
2. Single family or multi-family		Single family	
3. Number of units, if multi-family		1	
4. Number of Bedrooms		3	
5. Is this a worst case?		No	
6. Conditioned floor area (ft²)		1738 ft²	
7. Glass area & type	Single Pane	Double Pane	
a. Clear glass, default U-factor	42.0 ft²	120.0 ft²	
b. Default tint, default U-factor	0.0 ft²	0.0 ft²	
c. Labeled U-factor or SHGC	0.0 ft²	0.0 ft²	
8. Floor types			
a. Slab-On-Grade Edge Insulation		R=0.0, 157.5(p) ft	
b. N/A			
c. N/A			
9. Wall types			
a. Frame, Wood, Exterior		R=13.2, 1077.0 ft²	
b. Frame, Wood, Adjacent		R=12.9, 286.0 ft²	
c. N/A			
d. N/A			
e. N/A			
10. Ceiling types			
a. Under Attic		R=30.0, 1737.7 ft²	
b. N/A			
c. N/A			
11. Ducts			
a. Sup: Unc. Ret: Unc. AH: Garage		Sup. R=6.0, 46.0 ft	
b. N/A			

12. Cooling systems		
a. Central Unit	Cap: 36.0 kBtu/hr	
	SEER: 12.00	
b. N/A		
c. N/A		
13. Heating systems		
a. PTHP	Cap: 36.0 kBtu/hr	
	COP: 3.40	
b. N/A		
c. N/A		
14. Hot water systems		
a. Electric Resistance	Cap: 40.0 gallons	
	EF: 0.90	
b. N/A		
c. Conservation credits (HR-Heat recovery, Solar DHP-Dedicated heat pump)		
15. HVAC credits (CF-Ceiling fan, CV-Cross ventilation, HF-Whole house fan, PT-Programmable Thermostat, MZ-C-Multizone cooling, MZ-H-Multizone heating)		

I certify that this home has complied with the Florida Energy Efficiency Code For Building Construction through the above energy saving features which will be installed (or exceeded) in this home before final inspection. Otherwise, a new EPL Display Card will be completed based on installed Code compliant features.

Builder Signature: _____ Date: _____

Address of New Home: _____ City/FL Zip: _____

**NOTE: The home's estimated energy performance score is only available through the FLA/RES computer program. This is not a Building Energy Rating. If your score is 80 or greater (or 86 for a US EPA/DOE EnergyStar™ designation), your home may qualify for energy efficiency mortgage (EEM) incentives if you obtain a Florida Energy Gauge Rating. Contact the Energy Gauge Hotline at 321/638-1492 or see the Energy Gauge web site at www.fsec.ucf.edu for information and a list of certified Raters. For information about Florida's Energy Efficiency Code For Building Construction, contact the Department of Community Affairs at 850/487-1824.*

EnergyGauge® (Version: FLRCPB v3.4)

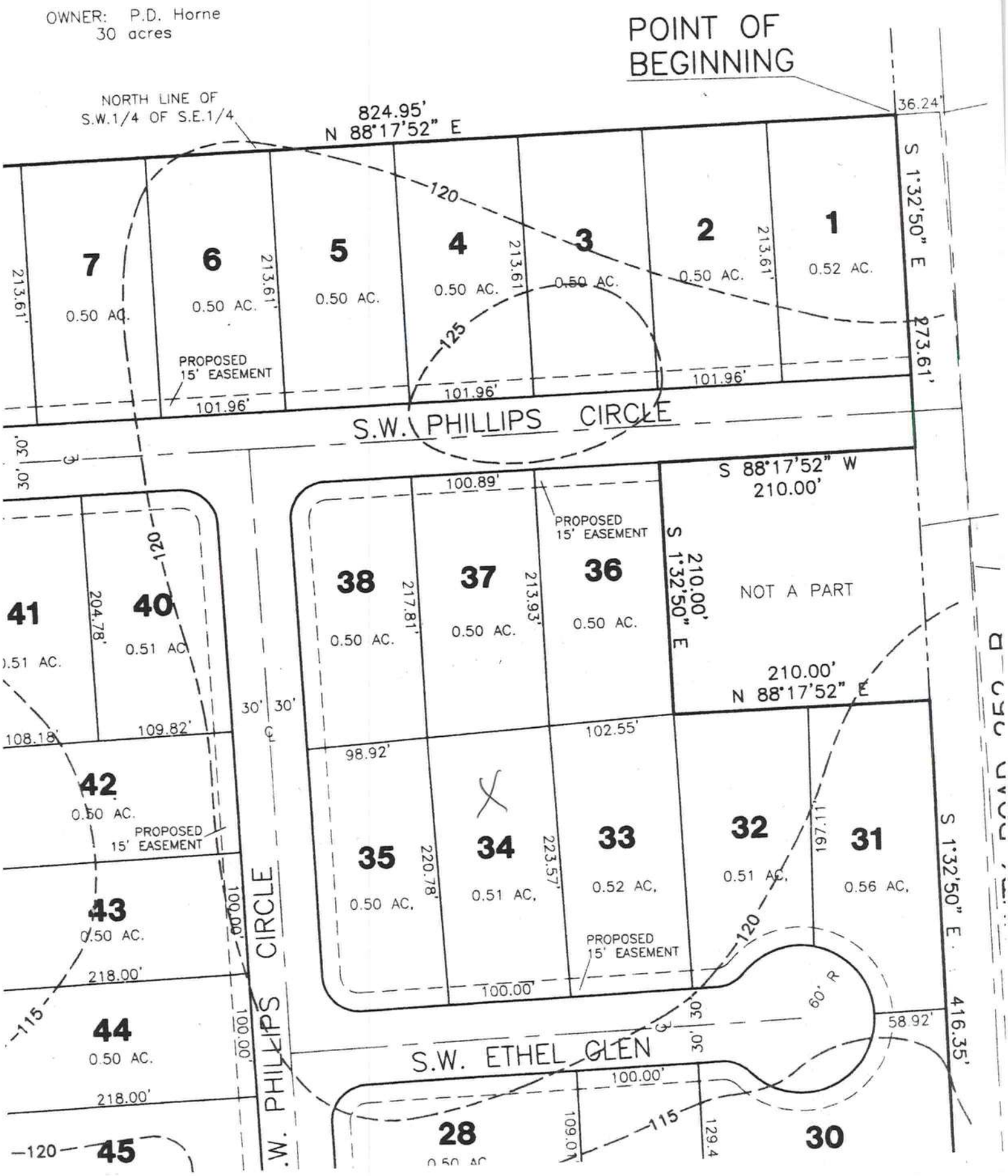
OWNER: P.D. Horne
30 acres
POINT OF BEGINNING
NORTH LINE OF S.W.1/4 OF S.E.1/4
824.95'
N 88°17'52" E
36.24'
S 1°32'50" E
273.61'
7
0.50 AC.
6
0.50 AC.
5
0.50 AC.
4
0.50 AC.
3
0.50 AC.
2
0.50 AC.
1
0.52 AC.
213.61'
120
125
PROPOSED 15' EASEMENT
101.96'
S.W. PHILLIPS CIRCLE
30'
S 88°17'52" W
210.00'
100.89'
PROPOSED 15' EASEMENT
S 1°32'50" E
210.00'
NOT A PART
210.00'
N 88°17'52" E
38
0.50 AC.
217.81'
37
0.50 AC.
213.93'
36
0.50 AC.
41
0.51 AC.
204.78'
40
0.51 AC.
108.18'
109.82'
42
0.50 AC.
PROPOSED 15' EASEMENT
43
0.50 AC.
218.00'
44
0.50 AC.
218.00'
45
115
W. PHILLIPS CIRCLE
100.00'
98.92'
102.55'
35
0.50 AC.
220.78'
34
0.51 AC.
223.57'
33
0.52 AC.
32
0.51 AC.
197.11'
31
0.56 AC.
S 1°32'50" E
416.35'
58.92'
60' R
S.W. ETHEL GLEN
28
109.01'
129.4
30

oning classification: RSF - 2 (per Columbia County Zoning Dept.)

uilding Setback requirements: Front (street)= 25' Sides= 10' Rear= 15'

Vater supply by central system and sewage disposal by individual septic tank/drainfeilds per County and Health Dept. approval.

Contour elevations shown are based on USGS quadrangle map information.

Examination of the flood hazard maps (F.I.R.M.) of the Federal Emergency Management Agency, shows the proposed development lies partly within Flood Zone "X" which, per said maps is defined as an area outside of the 500 year flood plain, and partly in Flood Zone "A", defined per said maps as an area within 100 year flood plain (ref: Community Panel No. 120070 0175 B). See face of plat for Zone "A" delineation.

Soils data taken from the Soils Survey of Columbia County by the U.S. Department of Agriculture Soils Conservation Service.

SHEET 1 OF 1

Donald F. Lee and Associates, Inc.

SURVEYORS – ENGINEERS

950 South Ridgewood Drive, Lake City, Florida 32055

Phone: (904) 755-6166 FAX: (904) 755-6167

Certificate of Authorization # LB 7042

D F L

Date: 7-31-2001	PRELIMINARY PLANS OF	Scale: 1"= 100'
Drafting: T A D	TURKEY RUN	Field Book: 01-337
Computations: T A D	PHASE 1	Work Order: 01-3680
Checked: D F L		File: B-12-1

This Instrument Prepared by & return to:
Name: Sherril Johns, an employee of TITLE OFFICES, LLC
Address: 1009 SW MAIN BLVD. LAKE CITY, FLORIDA 32025
File No. 057-0804651

Inst:2005020812 Date:08/26/2005 Time:15:40
Doc Stamp-Deed : 210.00
DC,P.DeWitt Cason,Columbia County B:1054 P:1696

Parcel I.D. #: 02759-294

SPACE ABOVE THIS LINE FOR PROCESSING DATA | SPACE ABOVE THIS LINE FOR RECORDING DATA

THIS WARRANTY DEED Made the 22nd day of August, A.D. 2005, by

BARBARA R. MORRELL, hereinafter called the grantor, to

EARL P. SAVAGE, whose post office address is

6389 CR 252, WELBORN, FLORIDA 32094, hereinafter called the grantee:

(Whenever used herein the terms "grantor" and "grantee" include all the parties to this instrument, singular and plural, the heirs, legal representatives and assigns of individuals, and the successors and assigns of corporations, wherever the context so admits or requires.)

Witnesseth: That the grantor, for and in consideration of the sum of $10.00 and other valuable consideration, receipt whereof is hereby acknowledged, does hereby grant, bargain, sell, alien, remise, release, convey and confirm unto the grantee all that certain land situate in Columbia County, State of FLORIDA, viz:

Lot 34, TURKEY RUN, according to the map or plat thereof as recorded in Plat Book 7, Page 116-117, of the Public Records of Columbia County, FLORIDA.

THE ABOVE DESCRIBED PROPERTY IS NOT THE HOMESTEAD PROPERTY OF THE GRANTOR.

Together with all the tenements, hereditaments and appurtenances thereto belonging or in anywise appertaining.

To Have and to Hold the same in fee simple forever.

And the grantor hereby covenants with said grantee that she is lawfully seized of said land in fee simple; that she has good right and lawful authority to sell and convey said land, and hereby fully warrants the title to said land and will defend the same against the lawful claims of all persons whomsoever, and that said land is free of all encumbrances, except taxes accruing subsequent to December 31, 2004.

In Witness Whereof, the said grantor has signed and sealed these presents, the day and year first above written.

Signed, sealed and delivered in the presence of:

Witness Signature
MARTHA BRYAN
Printed Name

Witness Signature
Sherril Johns
Printed Name

Barbara R. Morrell L.S.
BARBARA R. MORRELL
Address:
156 SW PHILLIPS CIRCLE, LAKE CITY, FLORIDA 32024

STATE OF FLORIDA
COUNTY OF COLUMBIA

The foregoing instrument was acknowledged before me this 22nd day of August, 2005, by BARBARA R. MORRELL, who is known to me or who has produced D.L. as identification.

Notary Public
My commission expires

Martha Bryan
MY COMMISSION # DD782534 EXPIRES
August 10, 2007
BONDED THRU TROY FAIN INSURANCE, INC.

OTICE OF COMMENCEMENT FORM
OLUMBIA COUNTY, FLORIDA

THIS DOCUMENT MUST BE RECORDED AT THE COUNTY CLERKS OFFICE BEFORE YOUR FIRST INSPECTION.

HE UNDERSIGNED hereby gives notice that improvement will be made to certain real property, and in accordance ith Chapter 713, Florida Statutes, the following information is provided in this Notice of Commencement.

ax Parcel ID Number 03-4S-16-02739-234

. Description of property: (legal description of the property and street address or 911 address)
lot 34 Turkey Run Sub. SW Phillips Circle according to the Plat Book 7 Pg 116-117 of Public Records Columbia County, FL

2. General description of improvement: Frame Brick Home

3. Owner Name & Address Earl Savage 6389 CR 252 Wellborn FL 32094 Interest in Property owner

4. Name & Address of Fee Simple Owner (if other than owner): N/A

5. Contractor Name Woodman Park Builders Phone Number 386-755-2411
Address PO Box 3535 Lake City, FL 32056

6. Surety Holders Name N/A
Address
Amount of Bond N/A

Inst:2005027020 Date:10/31/2005 Time:09:55
DC,P.DeWitt Cason,Columbia County B:1063 P:1240

7. Lender Name N/A
Address

8. Persons within the State of Florida designated by the Owner upon whom notices or other documents may be served as provided by section 718.13 (1)(a) 7; Florida Statutes:
Name N/A Phone Number
Address

9. In addition to himself/herself the owner designates N/A of to receive a copy of the Lienor's Notice as provided in Section 713.13 (1) – (a) 7. Phone Number of the designee

10. Expiration date of the Notice of Commencement (the expiration date is 1 (one) year from the date of recording, (Unless a different date is specified) N/A

NOTICE AS PER CHAPTER 713, Florida Statutes:
The owner must sign the notice of commencement and no one else may be permitted to sign in his/her stead.

Sworn to (or affirmed) and subscribed before day of 14, October, 20 05

Earl L Savage
Signature of Owner

NOTARY STAMP/SEAL

Brenda Terry
My Commission DD293886
Expires February 24, 2008

Brenda Terry
Signature of Notary

New Construction Subterranean Termite Soil Treatment Record

OMB Approval No. 2502-0525
(exp. 10/31/2005)

This form is completed by the licensed Pest Control Company.

Public reporting burden for this collection of information is estimated to average 15 minutes per response, including the time for reviewing instructions, searching existing data sources, gathering and maintaining the data needed, and completing and reviewing the collection of information. This information is mandatory and is required to obtain benefits. HUD may not collect this information, and you are not required to complete this form, unless it displays a currently valid OMB control number.
Section 24 CFR 200.926d(b)(3) requires that the sites for HUD insured structures must be free of termite hazards. This information collection requires the builder to certify that an authorized Pest Control company performed all required treatment for termites, and that the builder guarantees the treated area against infestation for one year. Builders, pest control companies, mortgage lenders, homebuyers, and HUD as a record of treatment for specific homes will use the information collected. The information is not considered confidential.

This report is submitted for informational purposes to the builder on proposed (new) construction cases when soil treatment for prevention of subterranean termite infestation is specified by the builder, architect, or required by the lender, architect, FHA, or VA.

All contracts for services are between the Pest Control Operator and builder, unless stated otherwise.

23846

Section 1: General Information (Treating Company Information)

Company Name: Aspen Pest Control, Inc.
Company Address: 301 NW Cole Terrace City Lake City State FL Zip 32055
Company Business License No. JB109476 Company Phone No. 386-755-3611
FHA/VA Case No. (if any)

Section 2: Builder Information

Company Name: Woodman Pulte Builders Company Phone No.

Section 3: Property Information

Location of Structure(s) Treated (Street Address or Legal Description, City, State and Zip) 176 SW Phillips Circle Lake City FL

Type of Construction (More than one box may be checked) ☒ Slab ☐ Basement ☐ Crawl ☐ Other
Approximate Depth of Footing: Outside 12 Inside 24 Type of Fill Rock

Section 4: Treatment Information

Date(s) of Treatment(s) 1-3-05
Brand Name of Product(s) Used Prabuild T.C
EPA Registration No. 100-1006
Approximate Final Mix Solution % 0.25
Approximate Size of Treatment Area: Sq. ft. 2559 Linear ft. 185 Linear ft. of Masonry Voids 185
Approximate Total Gallons of Solution Applied 518
Was treatment completed on exterior? ☐ Yes ☒ No
Service Agreement Available? ☒ Yes ☐ No
Note: Some state laws require service agreements to be issued. This form does not preempt state law.

ments (List)

Steve Brannon Certification No. (if required by State law) JF104376

duct in accordance with the product label and state requirements. All treatment materials and methods used comply with state and

Date 1-3-05

statements. Conviction may result in criminal and/or civil penalties. (18 U.S.C. 1001, 1010. 1012; 31 U.S.C. 3729, 3802)

form **HUD-NPCA-99-B** (04/2003)

CERTIFICATE OF OCCUPANCY

COLUMBIA COUNTY, FLORIDA

Department of Building and Zoning Inspection

This Certificate of Occupancy is issued to the below named permit holder for the building and premises at the below named location, and certifies that the work has been completed in accordance with the Columbia County Building Code.

Parcel Number 03-4S-16-02739-234

Building permit No. 000023846

Use Classification SFD/UTILITY

Fire: 29.60

Permit Holder WILLIAM G. WOOD

Waste: 61.25

Owner of Building EARL SAVAGE

Total: 90.85

Location: 176 SW PHILLIPS CIRCLE(TURKEY RUN,LOT 34)

Date: 06/26/2006

Harry Dicks by G

Building Inspector

POST IN A CONSPICUOUS PLACE
(Business Places Only)

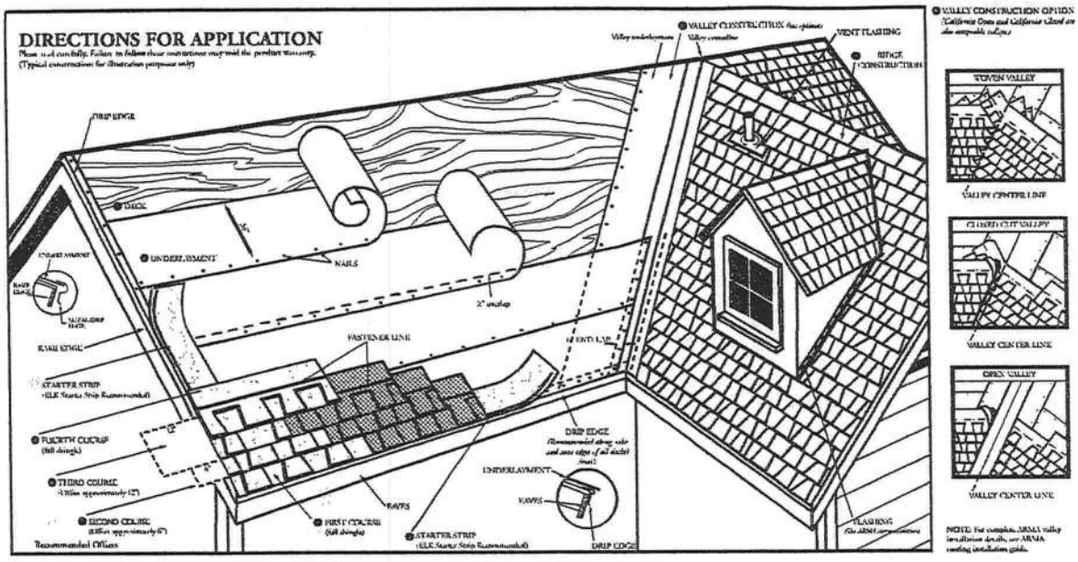

DIRECTIONS FOR APPLICATION

These application instructions are the minimum required to meet Elk's application requirements. Your failure to follow these instructions may void the product warranty. In some areas, the building codes may require additional application techniques or methods beyond our instructions. In these cases, the local code must be followed. Under no circumstances will Elk accept application requirements that are less than those printed here. Shingles should not be jammed tightly together. All attics should be properly ventilated. Note: It is not necessary to remove tape on back of shingle.

❶ DECK PREPARATION

Roof decks should be dry, well-seasoned 1" x 6" boards or exterior grade plywood minimum 3/8" thick and conform to the specifications of the American Plywood Association or 7/16" oriented strandboard, or 7/16" chipboard.

❷ UNDERLAYMENT

Apply underlayment (Non-Perforated No. 15 or 30 asphalt saturated felt). Elk Versashield® or self adhering underlayment is also acceptable. Cover drip edge at eaves only.

For low slope(2/12 up to 4/12), completely cover the deck with two plies of underlayment overlapping a minimum of 19". Begin by fastening a 19" wide strip of underlayment placed along the eaves. Place a full 36" wide sheet over the starter, horizontally placed along the eaves and completely overlapping the starter strip.

EAVE FLASHING FOR ICE DAMS (ASK A ROOFING CONTRACTOR, REFER TO ARMA MANUAL OR CHECK LOCAL CODES)

For standard slope (4/12 to less than 21/12), use coated roll roofing of no less than 50 pounds over the felt underlayment extending from the eave edge to a point at least 24" beyond the inside wall of the living space below or one layer of a self-adhered eave and flashing membrane.

For low slope (2/12 up to 4/12), use a continuous layer of asphalt plastic cement between the two plies of underlayment from the eave edge up roof to a point at least 24" beyond the inside wall of the living space below or one layer of a self-adhered eave and flashing membrane.

Consult the Elk Technical Services Department for application specifications over other decks and other slopes.

❸ STARTER SHINGLE COURSE

USE AN ELK STARTER STRIP OR THE HEADLAP OF A STRIP SHINGLE WITH THE ADHESIVE STRIP POSITIONED AT THE EAVE EDGE. With at least 3" trimmed from the end of the first shingle, start at the rake edge overhanging the eave and rake edges 1/2" to 3/4". Fasten 2" from the lower edge and 1" from each side.

❹ FIRST COURSE

Start at rake and continue course with full shingles laid flush with the starter course. Shingles may be applied with a course alignment of 45° on the roof

❺ SECOND COURSE

Offset the second course of shingles with respect to the first by approximately 6". Other offsets are approved if greater than 4".

❻ THIRD COURSE

Offset the next course by 6" with respect to the second course, or consistent with the original offset.

❼ FOURTH COURSE

Start at the rake and continue with full shingles across roof.

FIFTH AND SUCCEEDING COURSES.

Repeat application as shown for second, third, and fourth courses. Do not rack shingles straight up the roof. Offsets may be adjusted around valleys and penetrations.

❽ VALLEY CONSTRUCTION

Open, woven and closed cut valleys are acceptable when applied by Asphalt Roofing Manufacturing Association (ARMA) recommended procedures. For metal valleys, use 36" wide vertical underlayment prior to applying metal flashing (secure edge with nails). No nails are to be within 6" of valley center.

❾ RIDGE CONSTRUCTION

For ridge construction Elk recommends Class "A" Z®Ridge or Seal-A-Ridge® with formula *FLX*™ or RidgeCrest™ with *FLX* (See ridge package for installation instructions). Vented RidgeCrest or 3-tab shingles are also approved.

FASTENERS

While nailing is the preferred method for Elk shingles, Elk will accept fastening methods according to the following instructions.

Using the fastener line as a reference, nail or staple the shingle in the double thickness common bond area. For shingles without a fastener line, nails or staples must be placed between and/or in the sealant dots.

NAILS: Corrosive resistant, 3/8" head, minimum 12-gauge roofing nails. Elk recommends 1-1/4" for new roofs and 1-1/2" for roof-overs. In cases where you are applying shingles to a roof that has an exposed overhang, for new roofs only, 3/4" ring shank nails are allowed to be used from the eave's edge to a point up the roof that is past the outside wall line. 1" ring shank nails allowed for re-roof.

STAPLES: Corrosive resistant, 16-gauge minimum, crown width minimum of 15/16". Note: An improperly adjusted staple gun can result in raised staples that can cause a fish-mouthed appearance and can prevent sealing.

Fasteners should be long enough to obtain 3/4" deck penetration or penetration through deck, whichever is less. This product meets the requirements of the IRC 2003 code when fastened with 4 nails.

MANSARD APPLICATIONS

Correct fastening is critical to the performance of the roof. For slopes exceeding 60° (or 21/12) use six fasteners per shingle. Locate fasteners in the fastener area 1" from each side edge with the remaining four fasteners equally spaced along the length of the double thickness (laminated) area. Only fastening methods according to the above instructions are acceptable.

LIMITED WIND WARRANTY

- For a Limited Wind Warranty, all Prestique and Raised Profile™ shingles must be applied with 4 properly placed fasteners, or in the case of mansard applications, 6 properly placed fasteners per shingle.
- For a Limited Wind Warranty up to 110 MPH for Prestique Gallery Collection or Prestique Plus or 90 MPH for Prestique I, shingles must be applied with 6 properly placed NAILS per shingle. SHINGLES APPLIED WITH STAPLES WILL NOT QUALIFY FOR THIS ENHANCED LIMITED WIND WARRANTY. Also, Elk Starter Strip shingles must be applied at the eaves and rake edges to qualify Prestique Plus, Prestique Gallery Collection and Prestique I shingles for this enhanced Limited Wind Warranty. Under no circumstances should the Elk Shingles or the Elk Starter Strip overhang the eaves or rake edge more than 3/4 of an inch.

HELP STOP BLOW-OFFS AND CALL-BACKS

A minimum of four fasteners must be driven into the DOUBLE THICKNESS (laminated) area of the shingle. Nails or staples must be placed along – and through – the "fastener line" or on products without fastener lines, nail or staple between and in line with sealant dots. CAUTION: Do not use fastener line for shingle alignment.

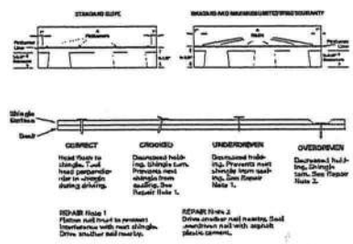

Refer to local codes which in some areas may require specific application techniques beyond those Elk has specified.

All Prestique and Raised Profile shingles have a U.L.® Wind Resistance Rating when applied in accordance with these instructions using nails or staples on re-roofs as well as new construction.

CAUTION TO WHOLESALER: Careless and improper storage or handling can harm fiberglass shingles. Keep these shingles completely covered, dry, reasonably cool, and protected from the weather. Do not store near various sources of heat. Do not store in direct sunlight until applied. DO NOT DOUBLE STACK. Systematically rotate all stock so that the material that has been stored the longest will be the first to be moved out.

ELK
The Premium Choice®
www.elkcorp.com

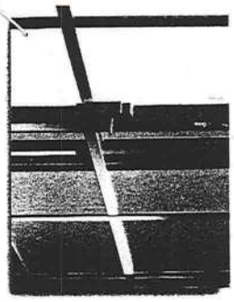

650 SERIES

Non-Thermal Single Hung Aluminum Windows

Ideal for warmer climates, this durable single hung offers plenty of features.

- Aluminum Tilt-Single Hung
- Block & Tackle Balance
- Sweep Lock System at Meeting Rail
- Inside Removable Meeting Rail for Easy Drywall Pass Thru.
- Interlock System at Meeting Rail
- Optional Decorative Grids Between the Glass
- Complete Specialty Window and Mulling Accessories Available
- AAMA Labeled and NFRC Certified

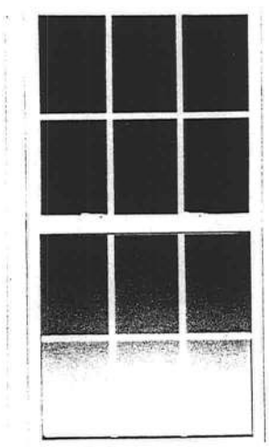

CAPITOL™
WINDOWS AND DOORS

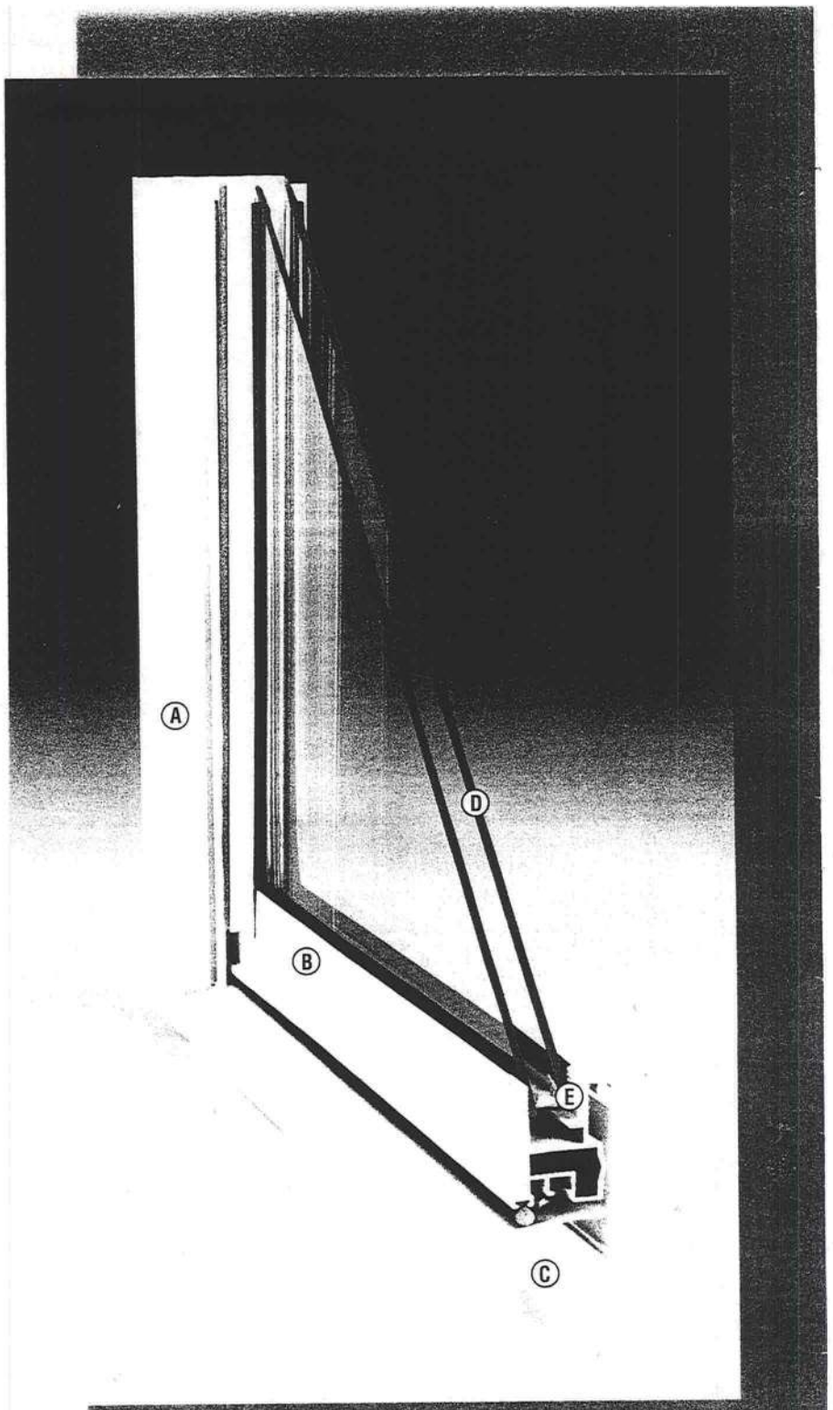

A Aluminum Main Frame

B Aluminum Sash

C 2 3/8" Frame Depth

D 5/8" Insulated Glass

E Removable Bottom Glass Is Marine Glazed In Sash Frame
Removable Top Glass Is Drop-In Tape Glazed In Main Frame

650 SERIES

Single Hung Opening Specifications

NOMINAL UNIT SIZE	SASH RAISED SQ. FT. CLEAR OPENING	SASH RAISED CLEAR OPENING WIDTH X HEIGHT (INCH x INCH)	SASH REMOVED SQ. FT. CLEAR OPENING	SASH REMOVED CLEAR OPENING WIDTH X HEIGHT (INCH x INCH)	VENT AREA SQ. FT.	VISIBLE LITE SQ. FT.	SCREEN SIZE WIDTH x HEIGHT	GLASS SIZE WIDTH x HEIGHT
2'0 x 3'0	1.68	18 1/8 x 13 5/16	1.93	18 1/8 x 15 5/16	1.91	3.72	19 1/4 x 17	19 x 16
2'0 x 4'0	2.43	18 1/8 x 19 5/16	2.68	18 1/8 x 21 5/16	2.65	5.21	19 1/4 x 23	19 x 22
2'0 x 4'4	2.68	18 1/8 x 21 5/16	2.93	18 1/8 x 23 5/16	2.90	5.71	19 1/4 x 25	19 x 24
2'0 x 5'0	3.19	18 1/8 x 25 5/16	3.44	18 1/8 x 27 5/16	3.39	6.70	19 1/4 x 29	19 x 28
2'0 x 6'0	3.94	18 1/8 x 31 5/16	4.19	18 1/8 x 33 5/16	4.13	8.19	19 1/4 x 35	19 x 34
2'0 x 6'0 ORIEL	3.19	18 1/8 x 25 5/16	3.44	18 1/8 x 27 5/16	3.39	8.19	19 1/4 x 29	19 x 40 TOP 19 x 28 BOTTOM
2'4 x 3'0	2.05	22 1/8 x 13 5/16	2.35	22 1/8 x 15 5/16	2.34	4.56	23 1/4 x 17	23 x 16
2'4 x 4'0	2.97	22 1/8 x 19 5/16	3.27	22 1/8 x 21 5/16	3.25	6.38	23 1/4 x 23	23 x 22
2'4 x 4'0	3.27	22 1/8 x 21 5/16	3.58	22 1/8 x 23 5/16	3.55	6.99	23 1/4 x 25	23 x 24
2'4 x 5'0	3.89	22 1/8 x 25 5/16	4.20	22 1/8 x 27 5/16	4.15	8.20	23 1/4 x 29	23 x 28
2'4 x 6'0	4.81	22 1/8 x 31 5/16	5.12	22 1/8 x 33 5/16	5.06	10.03	23 1/4 x 35	23 x 34
2'4 x 6'0 ORIEL	3.89	22 1/8 x 25 5/16	4.20	22 1/8 x 27 5/16	4.15	10.03	23 1/4 x 29	23 x 40 TOP 23 x 28 BOTTOM
2'8 x 3'0	2.42	26 1/8 x 13 5/16	2.78	26 1/8 x 15 5/16	2.77	5.39	27 1/4 x 17	27 x 16
2'8 x 4'0	3.50	26 1/8 x 19 5/16	3.87	26 1/8 x 21 5/16	3.84	7.55	27 1/4 x 23	27 x 22
2'8 x 4'4	3.87	26 1/8 x 21 5/16	4.23	26 1/8 x 23 5/16	4.20	8.27	27 1/4 x 25	27 x 24
2'8 x 5'0	4.59	26 1/8 x 25 5/16	4.96	26 1/8 x 27 5/16	4.92	9.70	27 1/4 x 29	27 x 28
2'8 x 6'0	5.68	26 1/8 x 31 5/16	6.04	26 1/8 x 33 5/16	5.99	11.86	27 1/4 x 35	27 x 34
2'8 x 6'0 ORIEL	4.59	26 1/8 x 25 5/16	4.96	26 1/8 x 27 5/16	4.92	11.86	27 1/4 x 29	27 x 40 TOP 27 x 28 BOTTOM
3'0 x 3'0	2.78	30 1/8 x 13 5/16	3.20	30 1/8 x 15 5/16	3.20	6.22	31 1/4 x 17	31 x 16
3'0 x 4'0	4.04	30 1/8 x 19 5/16	4.46	30 1/8 x 21 5/16	4.44	8.71	31 1/4 x 23	31 x 22
3'0 x 4'4	4.46	30 1/8 x 21 5/16	4.88	30 1/8 x 23 5/16	4.86	9.54	31 1/4 x 25	31 x 24
3'0 x 5'0	5.30	30 1/8 x 25 5/16	5.71	30 1/8 x 27 5/16	5.68	11.20	31 1/4 x 29	31 x 28
3'0 x 6'0	6.55	30 1/8 x 31 5/16	6.97	30 1/8 x 33 5/16	6.92	13.69	31 1/4 x 35	31 x 34
3'0 x 6'0 ORIEL	5.30	30 1/8 x 25 5/16	5.71	30 1/8 x 27 5/16	5.68	13.69	31 1/4 x 29	31 x 40 TOP 31 x 28 BOTTOM
3'4 x 4'0	4.58	34 1/8 x 19 5/16	5.05	34 1/8 x 21 5/16	5.04	9.88	35 1/4 x 23	35 x 22
3'4 x 4'4	5.05	34 1/8 x 21 5/16	5.52	34 1/8 x 23 5/16	5.51	10.82	35 1/4 x 25	35 x 24
3'4 x 5'0	6.00	34 1/8 x 25 5/16	6.47	34 1/8 x 27 5/16	6.45	12.70	35 1/4 x 29	35 x 28
3'4 x 6'0 ORIEL	6.00	34 1/8 x 25 5/16	6.47	34 1/8 x 27 5/16	6.45	15.53	35 1/4 x 29	35 x 40 TOP 35 x 28 BOTTOM
3'8 x 4'0	5.11	38 1/8 x 19 5/16	5.64	38 1/8 x 21 5/16	5.64	11.05	39 1/4 x 23	39 x 22
3'8 x 4'4	5.64	38 1/8 x 21 5/16	6.17	38 1/8 x 23 5/16	6.16	12.10	39 1/4 x 25	39 x 24
3'8 x 5'0	6.70	38 1/8 x 25 5/16	7.23	38 1/8 x 27 5/16	7.21	14.20	39 1/4 x 29	39 x 28
3'8 x 6'0 ORIEL	6.70	38 1/8 x 25 5/16	7.23	38 1/8 x 27 5/16	7.21	17.36	39 1/4 x 29	39 x 40 TOP 39 x 28 BOTTOM
4'0 x 4'0	5.65	42 1/8 x 19 5/16	6.23	42 1/8 x 21 5/16	6.23	12.21	43 1/4 x 23	43 x 22
4'0 x 5'0	7.40	42 1/8 x 25 5/16	7.99	42 1/8 x 27 5/16	7.97	15.70	43 1/4 x 29	43 x 28
4'0 x 6'0 ORIEL	7.40	42 1/8 x 25 5/16	7.99	42 1/8 x 27 5/16	7.97	15.70	43 1/4 x 29	43 x 40 TOP 43 x 28 BOTTOM

CAPITOL™
WINDOWS AND DOORS

650 SERIES

Non-Thermal Aluminum Single Hung & Specialty - Standard Window Unit Sizes Available

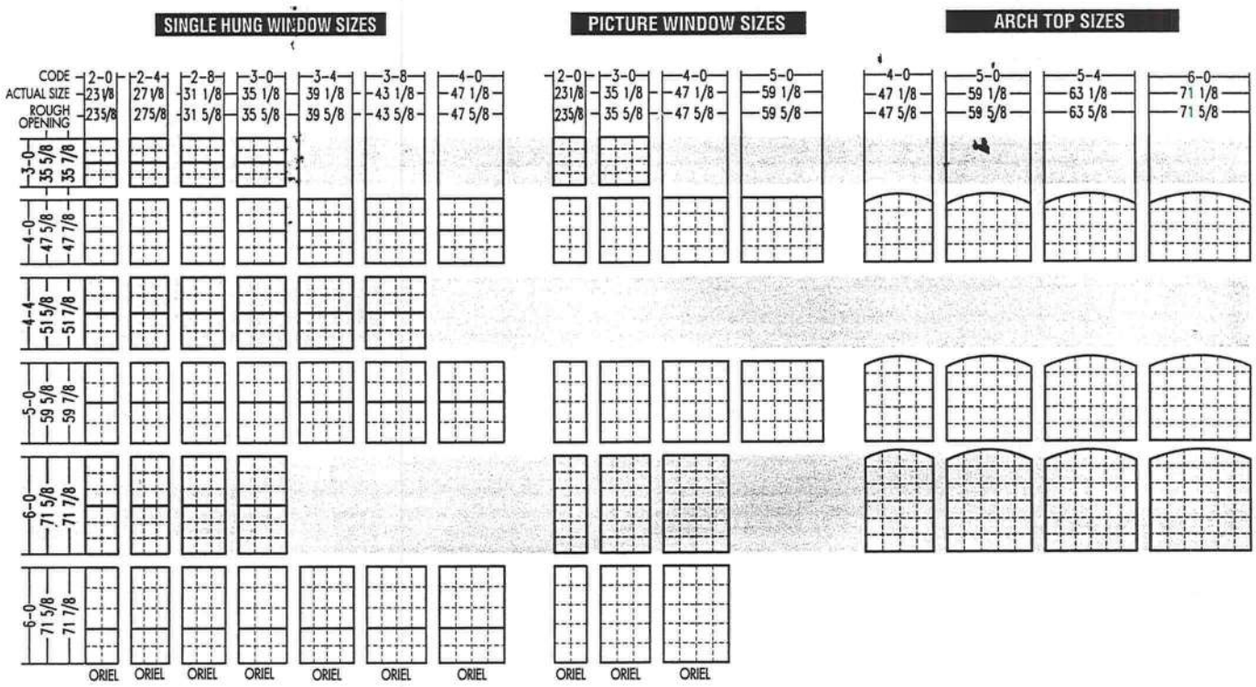

QUALITY CONTROL & TESTING

AAMA CERTIFICATION PROGRAM

ACCREDITED BY: AMERICAN NATIONAL STANDARDS INSTITUTE

Validator: ALI®

CODE: MTL-4

AAMA MEMBER

NFRC National Fenestration Rating Council CERTIFIED

Energy EPA DOE

Some products may require special glazing options to meet certain Energy Star criteria. Contact your sales representative for more information.

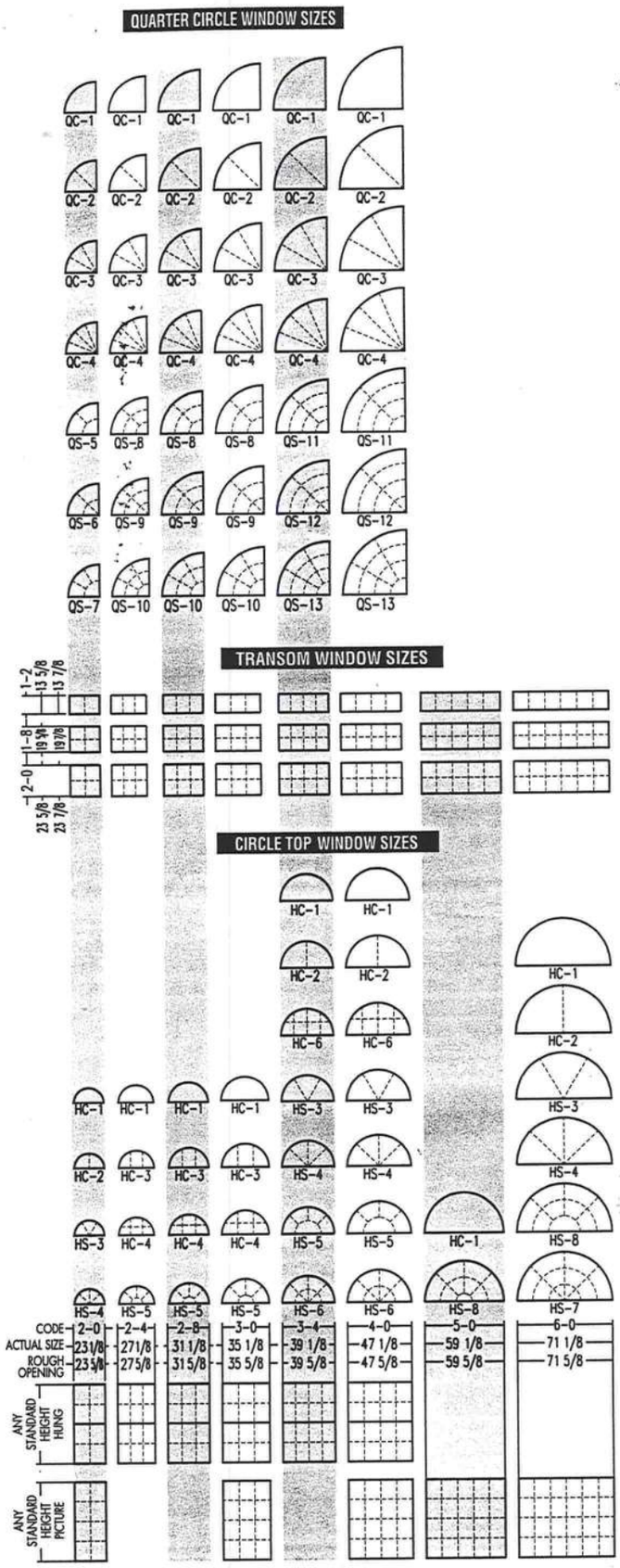

NOTE: Actual height of circle top = Actual width divided by 2 + 9/16"
Rough Opening height of circle top = Actual Height (calculated above) + 1/2"

QUART

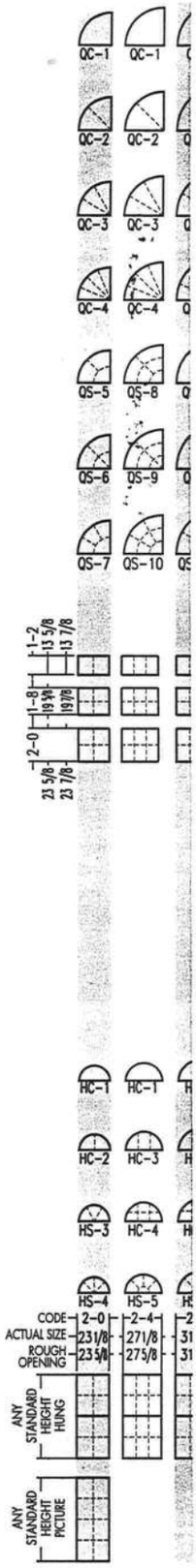

NOTE: Actua
Roug

650 SERIES

Non-Thermal Single Hung Aluminum Windows

MULLIONS AVAILABLE

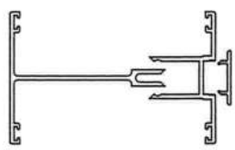

CM–45028
CM–45029 3-PIECE
CM–45030
11/16" ADD ON

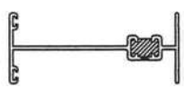

CM–65024 H–MULL
1/8" ADD ON

VERTICAL DETAIL

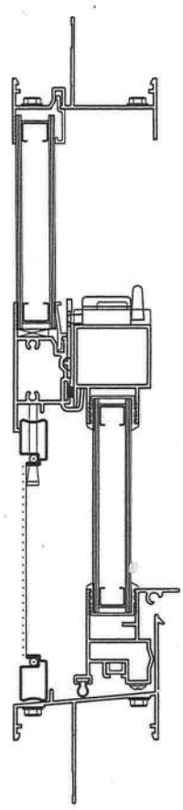

HORIZONTAL DETAIL

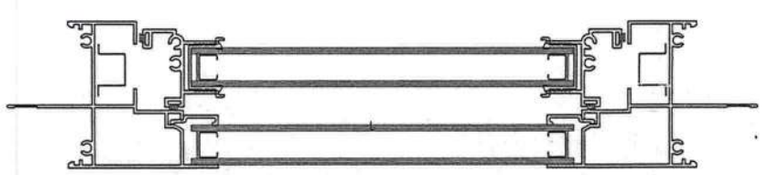

RS

MIAMI-DADE

MIAMI-DADE COUNTY, FLORIDA
METRO-DADE FLAGLER BUILDING

BUILDING CODE COMPLIANCE OFFICE
METRO-DADE FLAGLER BUILDING
140 WEST FLAGLER STREET, SUITE 1603
MIAMI, FLORIDA 33130-1563
(305) 375-2901 FAX (305) 375-2908

CONTRACTOR LICENSING SECTION
(305) 375-2527 FAX (305) 375-2558

CONTRACTOR ENFORCEMENT DIVISION
(305) 375-2966 FAX (305) 375-2908

PRODUCT CONTROL DIVISION
(305) 375-2902 FAX (305) 372-6339

PRODUCT CONTROL NOTICE OF ACCEPTANCE

Premdor Entry Systems
One Premdor Drive
Dickson ,TN 37055

Your application for Notice of Acceptance (NOA) of:
Entergy SE Double Door w/sidelite-Inswing - Opaque-8'0" In a Wood Frame
under Chapter 8 of the Code of Miami-Dade County governing the use of Alternate Materials and Types of Construction, and completely described herein, has been recommended for acceptance by the Miami-Dade County Building Code Compliance Office (BCCO) under the conditions specified herein.

This NOA shall not be valid after the expiration date stated below. BCCO reserves the right to secure this product or material at any time from a jobsite or manufacturer's plant for quality control testing. If this product or material fails to perform in the approved manner, BCCO may revoke, modify, or suspend the use of such product or material immediately. BCCO reserves the right to revoke this approval, if it is determined by BCCO that this product or material fails to meet the requirements of the South Florida Building Code.

The expense of such testing will be incurred by the manufacturer.

ACCEPTANCE NO.: 01-1031.06
EXPIRES: 11/05/2006

Raul Rodriguez
Chief, Product Control Division

THIS IS THE COVERSHEET, SEE ADDITIONAL PAGES FOR SPECIFIC AND GENERAL CONDITIONS
BUILDING CODE & PRODUCT REVIEW COMMITTEE

This application for Product Approval has been reviewed by the BCCO and approved by the Building Code and Product Review Committee to be used in Miami-Dade County, Florida under the conditions set forth above.

Francisco J. Quintana, R.A.
Director
Miami-Dade County
Building Code Compliance Office

APPROVED: 12/11/2001

Premdor Entry Systems

ACCEPTANCE No.: 01-1031.06

APPROVED: December 11, 2001

EXPIRES: November 5, 2006

NOTICE OF ACCEPTANCE: SPECIFIC CONDITIONS

1. SCOPE

1.1 This renews Notice of Acceptance (NOA) No. 00-0720.10, which was issued on November 09, 2000. It renews the approval of a residential insulated steel door, as described in Section 2 of this NOA, designed to comply with the South Florida Building Code (SFBC), 1994 Edition for Miami-Dade County, for the locations where the pressure requirements, as determined by SFBC Chapter 23, do not exceed the Design Pressure Rating values indicated in the approved drawings.

2. PRODUCT DESCRIPTION

2.1 The Series **"Entergy" Inswing Opaque Double Residential Insulated Steel Doors(Metal Edge) with Sidelites 8' 0" High - Impact Resistant Door Slab Only** and its components shall be constructed in strict compliance with the following document: Drawing No 31-1034-EM-I, Sheets 1 through 6 of 6, titled "Premdor (Entergy Metal Edge) Double Door w/ Sidelites in Wood Frame w/ Bumper Threshold – 8' 0" Height (Inswing)," prepared by manufacturer, dated 6/15/98 and revised on 7/27/01, bearing the Miami-Dade County Product Control renewal stamp with the NOA number and expiration date by the Miami-Dade County Product Control Division. This document shall hereinafter be referred to as the approved drawings.

3. LIMITATIONS

3.1 This approval applies to single unit applications of pair of doors and single door with sidelites, as shown in approved drawings. Single door units shall include all components described in the active leaf of this approval.

3.2 Unit shall be installed only at locations protected by a canopy or overhang such that the angle between the edge of canopy or overhang to sill is less than 45 degrees. Unless unit is installed in non-habitable areas where the unit and the area are designed to accept water infiltration.

4. INSTALLATION

4.1 The residential insulated steel door and its components shall be installed in strict compliance with the approved drawings.

4.2 Hurricane protection system (shutters):
Door Slab: The installation of this unit <u>will not require</u> a hurricane protective system.
Sidelites: The installation of these units <u>will require</u> a hurricane protective system.

5. LABELING

5.1 Each unit shall bear a permanent label with the manufacturer's name or logo, city, state and following statement: "Miami-Dade County Product Control Approved".

6. BUILDING PERMIT REQUIREMENTS

6.1 Application for building permit shall be accompanied by copies of the following:

6.1.1 This Notice of Acceptance

6.1.2 Duplicate copies of the approved drawings, as identified in Section 2 of this Notice of Acceptance, clearly marked to show the components selected for the proposed installation.

6.1.3 Any other documents required by the Building Official or the South Florida Building Code (SFBC) in order to properly evaluate the installation of this system.

Raul Rodriguez, Chief
Product Control Division

Premdor Entry Systems

ACCEPTANCE No.. 01-1031.06

APPROVED: December 11, 2001

EXPIRES: November 5, 2006

NOTICE OF ACCEPTANCE: STANDARD CONDITIONS

1. Renewal of this Acceptance (approval) shall be considered after a renewal application has been filed and the original submitted documentation, including test supporting data, engineering documents, are no older than eight (8) years.
2. Any and all approved products shall be permanently labeled with the manufacturer's name, city, state, and the following statement: "Miami-Dade County Product Control Approved", or as specifically stated in the specific conditions of this Acceptance.
3. Renewals of Acceptance will not be considered if:
   a) There has been a change in the South Florida Building Code affecting the evaluation of this product and the product is not in compliance with the code changes;
   b) The product is no longer the same product (identical) as the one originally approved;
   c) If the Acceptance holder has not complied with all the requirements of this acceptance, including the correct installation of the product;
   d) The engineer who originally prepared, signed and sealed the required documentation initially submitted is no longer practicing the engineering profession.
4. Any revision or change in the materials, use, and/or manufacture of the product or process shall automatically be cause for termination of this Acceptance, unless prior written approval has been requested (through the filing of a revision application with appropriate fee) and granted by this office.
5. Any of the following shall also be grounds for removal of this Acceptance.
   a) Unsatisfactory performance of this product or process.
   b) Misuse of this Acceptance as an endorsement of any product, for sales, advertising or any other purpose.
6. The Notice of Acceptance number preceded by the words Miami-Dade County, Florida, and followed by the expiration date may be displayed in advertising literature. If any portion of the Notice of Acceptance is displayed, then it shall be done in its entirety.
7. A copy of this Acceptance as well as approved drawings and other documents, where it applies, shall be provided to the user by the manufacturer or its distributors and shall be available for inspection at the job site at all time. The engineer need not reseal the copies.
8. Failure to comply with any section of this Acceptance shall be cause for termination and removal of Acceptance.
9. This Notice of Acceptance consists of pages 1, 2 and this last page 3.

END OF THIS ACCEPTANCE

Raul Rodriguez, Chief
Product Control Division

PREMDOR (ENTERGY METAL EDGE) DOUBLE DOOR WITH SIDELITES IN WOOD FRAMES WITH BUMPER THRESHOLD-8'0" HEIGHT (INSWING)

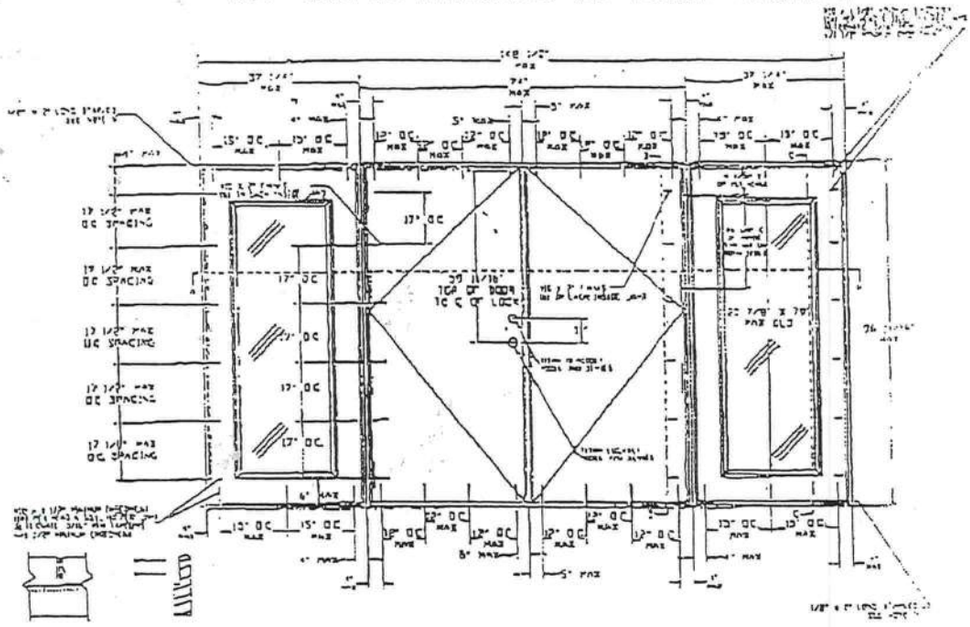

ATTACH ASTRAGAL THROW BOLT STRIKE PLATE TO THE HEADER AND THRESHOLD WITH #12 x 2" FLATHEAD SCREWS

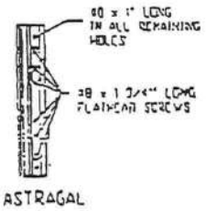

ASTRAGAL

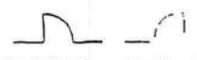

NOTES:

1) WOOD BUCKS BY OTHERS MUST BE ANCHORED PROPERLY TO TRANSFER LOADS TO THE STRUCTURE.
2) THE PRECEDING DRAWINGS ARE INTENDED TO QUALIFY THE FOLLOWING INSTALLATIONS.
A. WOOD FRAME CONSTRUCTION WHERE DOOR SYSTEM IS ANCHORED TO A MINIMUM TWO BY WOOD OPENING
B. MASONRY OR CONCRETE CONSTRUCTION WHERE DOOR SYSTEM IS ANCHORED TO A MINIMUM TWO BY STRUCTURAL WOOD BUCK
C. MASONRY OR CONCRETE CONSTRUCTION WHERE DOOR SYSTEM IS ANCHORED DIRECTLY TO CONCRETE OR MASONRY WITH OR WITHOUT A NON-STRUCTURAL TWO BY WOOD BUCK.
3. ALL ANCHORING SCREWS TO BE #10 WITH MINIMUM 1 1/2" EMBEDMENT INTO WOOD SUBSTRATE OR 3/16" PITH TAPCONS WITH 1 3/4" MINIMUM EMBEDMENT INTO MASONRY
4. GLAZED UNIT MUST BE INSTALLED WITH "MIAMI-DADE COUNTY APPROVED" SHUTTERS
5. USE 2 STAPLES PER SIDE JAMB INTO HEADER ON SIDELITES AND DOOR, THREE STAPLES PER JAMB INTO THRESHOLD ON SIDELITES AND DOOR
6. LATEX SEALANT TO BE APPLIED AT SIDE BY SIDE JAMBS AND SIDELITES
7. DOOR/SIDELITE HEADER, DOOR/SIDELITE JAMBS, AND SIDELITE BASE CORNERS ARE COPED AND BUTTED
8. DOORS SHALL BE PRE-PRIMED WITH AN ACRYLIC LATEX WATER-BASED/WATER-REDUCIBLE WHITE PRIMER WITH A DRY FILM THICKNESS OF 0.8 TO 1.2 MIL.
9. FRAMES SHALL BE PRE-PRIMED WITH A WATER-BASED EPOXY PRIMER WITH A DRY FILM THICKNESS OF 0.8 TO 1.2 MIL.

DESIGN PRESSURE RATINGS		
	WHERE WATER INFILTRATION REQUIREMENT IS NEEDED *	WHERE WATER INFILTRATION REQUIREMENT IS NOT NEEDED
Positive	NOT APPROVED *	+483 PSF
Negative	NOT APPROVED *	-483 PSF

* UNITS SHALL BE INSTALLED ONLY AT LOCATIONS PROTECTED BY A CANOPY OR OVERHANG SUCH THAT THE ANGLE BETWEEN THE CPSF OF CANOPY OR OVERHANG TO SILL IS LESS THAN 45 DEGREES UNLESS UNIT IS INSTALLED IN NON-HABITABLE AREAS WHERE THE UNIT AND THE AREA ARE DESIGNED TO ACCEPT WATER INFILTRATION.

PRODUCT RENEWED
ACCEPTANCE NO. 01-1031.06
EXPIRATION DATE: October 5, 2004
BY: PRODUCT CONTROL DIVISION
BUILDING CODE COMPLIANCE OFFICE

		DADE COUNTY REGULATIONS	
		REVISED PER DADE CO. REGULATIONS	
		REVISION	
ENGINEER			
PREMDOR ENTRY SYSTEMS		31-1034-EM-1 SHEET 1 OF 6	
			C

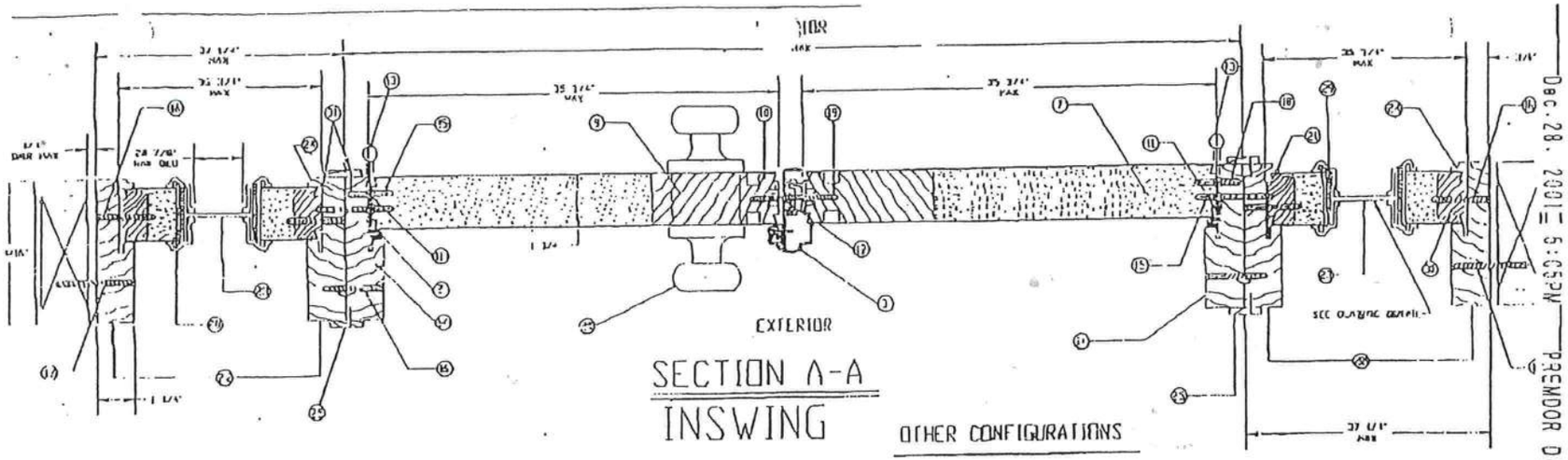

SECTION A-A
INSWING

OTHER CONFIGURATIONS

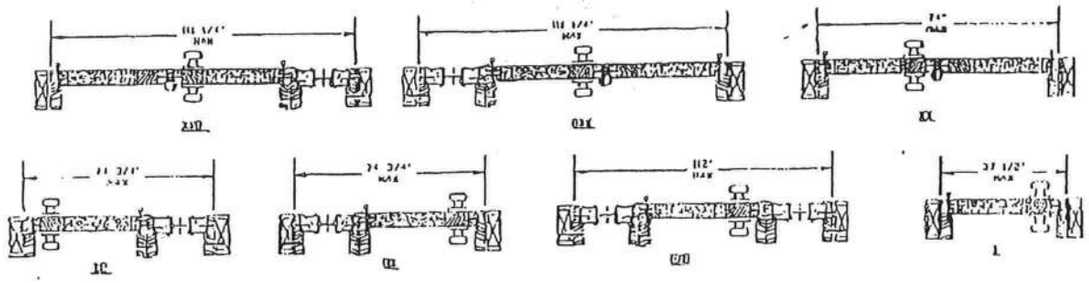

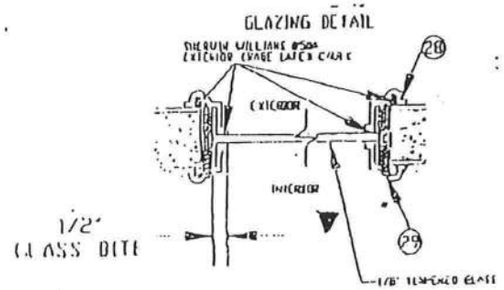

PRODUCT RENEWED
ACCEPTANCE No. 04-(6) 1-01
EXPIRATION DATE November 5, 2006
By

PREMDOR ENTRY SYSTEMS

LITHER DOOR PANEL STYLES

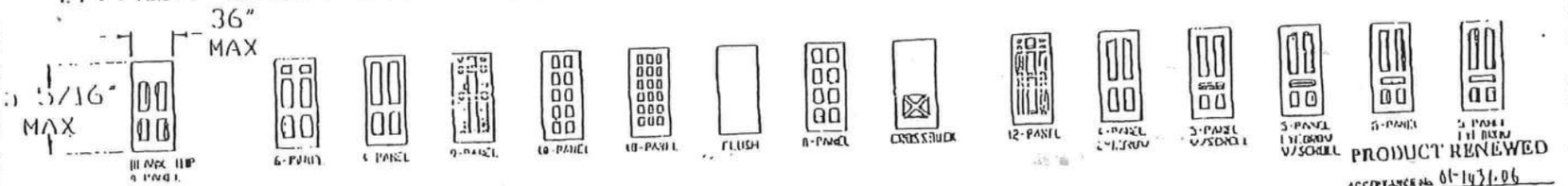

PRODUCT RENEWED
ACCEPTANCE No. 01-1431.06
EXPIRATION DATE November 1, 2006
By
PRODUCT CONTROL DIVISION
BUILDING CODE COMPLIANCE OFFICER

LITHER SIDELITE STYLES

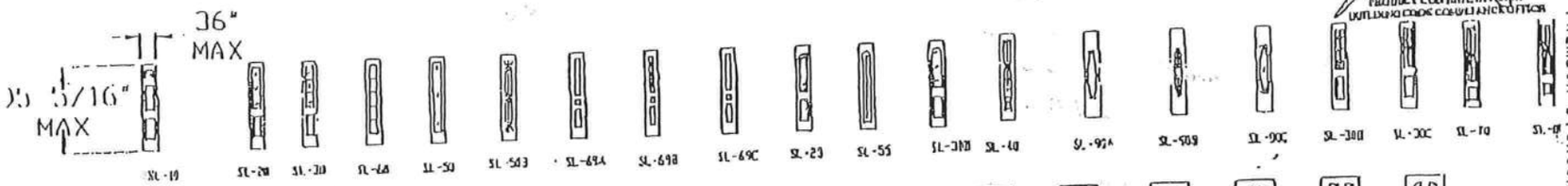

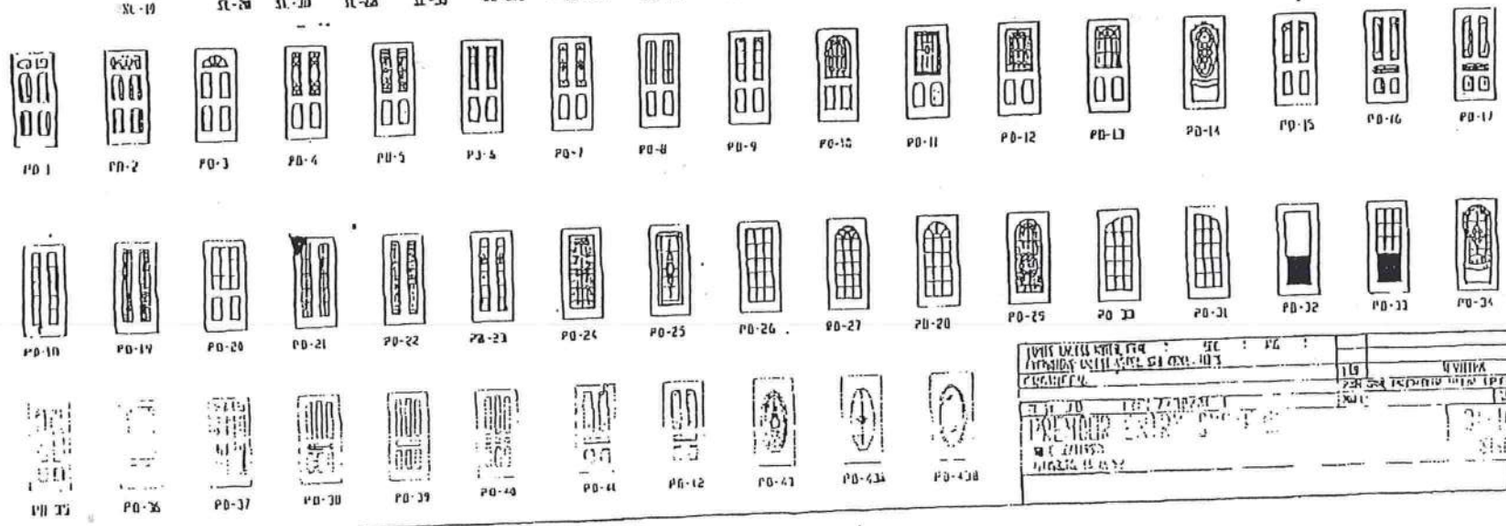

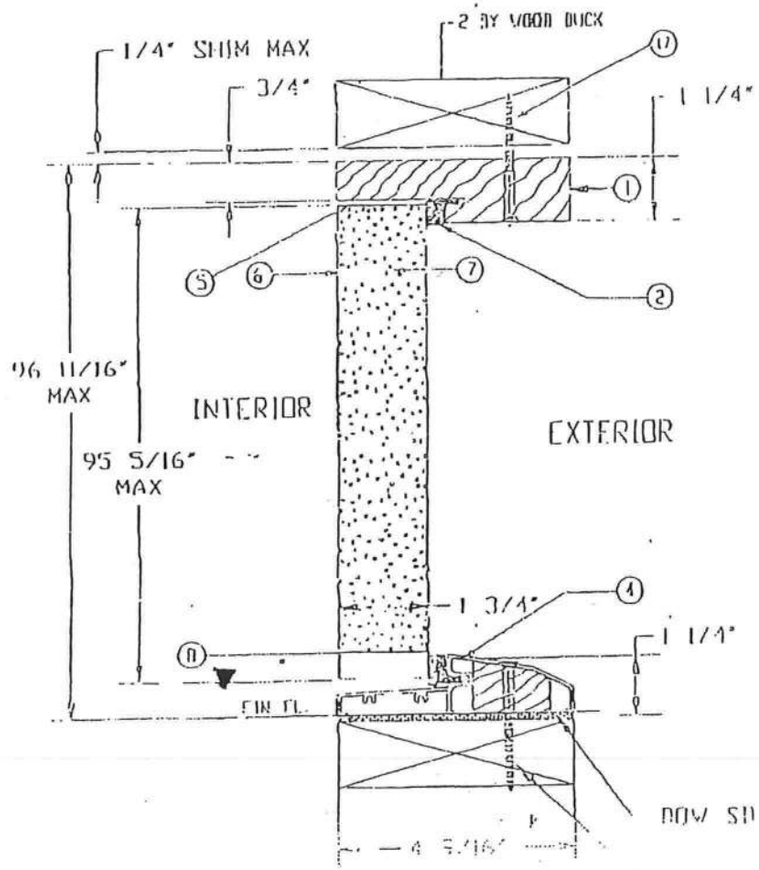

SECTION B-B

MATERIALS LIST

ITEM NO	DESCRIPTION	PART NUMBER	COMMENTS
1	WOOD HEAD JAMB	EX-14	1 1/4" X 4 9/16" NTL. TO BE PINE OR EQUIVALENT
2	COMPRESSION WEATHERSTRIP	EX-25	LOCKSCREEN BRAND LOXSEAL 9650 (NORMAL)
3	ALUMINUM ASTRAGAL	EX-12	PREMDOR BRAND OR EQUIVALENT - 3/16" ALUMINUM ASTRAGAL
4	ALUMINUM-SUPPER THRESHOLD	EX-15	PREMDOR BRAND OR EQUIVALENT - 1 1/4" x 4 9/16"
5	HIP CHANNEL	EX-08	PREMDOR BRAND - 1 11/16" - 20 GA STEEL
6	STEEL SKIN	[illegible]	[illegible]
7	POLYURETHANE FOAM CORE	BASE FOAM - DENSITY 20 TO 25 lbs/ft³	
11	BOTTOM CHANNEL	EX-07	PREMDOR BRAND - 1 11/16" - 20 GA STEEL
9	WOOD LOCK BLOCK	EX-05	4" X 4 1/2" NTL. TO BE PINE OR EQUIVALENT
10	STRIKE STILE	EX-06	PREMDOR BRAND - 1 11/16" - 20 GA STEEL
11	HINGE STILE	EX-05	PREMDOR BRAND - 1 11/16" - 20 GA STEEL
12	LOCK PREP FILLER PLATE	EX-13	PREMDOR BRAND - .050" THICK - NTL. TO BE PINE OR EQUIVALENT
13	4"x4" HINGE	EX-15	HAGER BRAND HINGE OR EQUIVALENT .097 THICK STEEL
14	WOOD HINGE JAMB	EX-13	1 1/2" X 4 9/16" NTL. TO BE PINE OR EQUIVALENT
15	#10-24 x 1/2" F.H.M.S.		(4) SCREWS PER HINGE INTO DOOR
16	#10 X 2" F.H.W.S.		(6) SCREWS THROUGH HINGE JAMB INTO SIDELITE JAMB, 3/4" TO 1 1/4" MAX 17" OC INDICATED (8) SCREWS THROUGH EACH SIDELITE JAMB INTO SIDELITE, 4" INSIDE TOP, MAX 17" OC INDICATED
17	[illegible]		REFER TO ELEVATION VIEW, FOR # OF SCREWS LOCATION AND LOCATION
18	#10 X 3/4" F.H.W.S.		(2) SCREWS PER HINGE INTO JAMB
19	#8 x 2" F.H.W.S.		(2) SCREWS AT EACH STRIKE PLATE
20	LOCKSET		TITAN LOCK 720 SERIES, TITAN HEADBOLT 700 SERIES
21	#10 X 1 3/4" F.H.W.S.		(2) SCREWS PER HINGE INTO JAMB
22	WOOD SIDELITE JAMB	EX-10	1 1/4" X 4 9/16" NTL. TO BE PINE OR EQUIVALENT
23	22" X 80" SINGLE PANEL GLASS	EX-19	TEMPERED GLASS IN POLYPROPYLENE FRAME - DC-1643 - 1/8" CLEAR TEMPERED GLASS
24	SIDELITE TRIM (WOOD)	EX-20	5/16 x 1/2" NTL. TO BE PINE OR EQUIVALENT
25	WOOD CASING	EX-21	1/8" x 1" NTL. TO BE PINE OR EQUIVALENT - USED ON HOLLOW OR SIDE OF SIDE JAMB AS NEEDED
26	WOOD SIDELITE HEAD JAMB	EX-22	1 1/4" X 4 9/16" NTL. TO BE PINE OR EQUIVALENT
27	WOOD SIDELITE BASE	EX-23	1 1/4" X 4 9/16" NTL. TO BE PINE OR EQUIVALENT
28	POLYPROPYLENE LITE FRAME	DC-1643, DB-2	HP Polypropylene by DIM.
29	#6 X 1 1/2" PAN HEAD SCREWS		18 PER FRAME [illegible]
30	SIDELITE STILES	EX-26	15/16" X 1 11/16" NTL. TO BE PINE OR EQUIVALENT
31	PIN NAIL		[illegible]

D	DADE COUNTY MODIFICATIONS	[illegible]	[illegible]
C	NOTED TEST RESULTS	[illegible]	[illegible]
B	[illegible]	[illegible]	[illegible]
A	REDRAWN	[illegible]	[illegible]

PRODUCT RENEWAL
NOC [illegible]
EXPIRATION DATE [illegible]
BY [illegible]
DADE COUNTY CONTROL DIVISION
BUILDING CODE COMPLIANCE OFFICE

PREMDOR ENTRY SYSTEMS
[illegible]
[illegible]

01-1034-EM 1
SHEET 3 OF 6

REVISION LETTER A

ATTN: JIMMY 3 PAGES GARAGE

Anthony 24F Power Beam®

Design Properties

24F POWER BEAM® Design Properties

Allowable Design Stresses (psi)

Flexural Stress F_b*	Tension Parallel to Grain F_t	Compression Perpendicular to Grain $F_{c\perp}$	Horizontal Shear F_v	Modulus of Elasticity MOE
2400	1150	740	240	1,800,000

*For nominal 12" depths. For other depths:

$C_v = K_L[(21/L)^{1/m} \times (12/d)^{1/n} \times (5.125/b)^{1/p}] \leq 1.0$

L = length of member between points of zero moment, ft.

d = depth, of bending member, inches.

b = width, inches for full width members.

K_L = loading coefficient.

SINGLE SPAN BEAM:	KL
Concentrated load at mid span	1.09
Uniformly distributed loads	1.0
Two equal concentrated loads at 1/3 points of span	0.96
CONTINUOUS BEAM OR CANTILEVER:	
All loading conditions	1.0

POWER BEAM® Section Properties

3-1/8" POWER BEAM®

Design Property	STANDARD DEPTHS (in inches)							
	8¼	9½	11	12¾	13¾	15¼	16½	17¾
Area (in.²)	26	30	34	39	43	47	52	56
Section Modulus(in.³)	35	48	63	80	98	119	142	166
Moment of Inertia(in.⁴)	146	232	347	494	677	901	1,170	1,487
Weight (lbs/LF)	6.8	7.9	9.1	10.2	11.3	12.5	13.6	14.8

5-1/8" POWER BEAM®

Design Property	STANDARD DEPTHS (in inches)									
	11	12¾	13¾	15¼	16½	17¾	19¼	20¾	22	23¾
Area (in.²)	56	63	70	78	85	92	99	106	113	120
Section Modulus(in.³)	103	131	161	195	233	273	317	363	413	467
Moment of Inertia(in.⁴)	568	809	1110	1478	1919	2439	3047	3747	4548	5455
Weight (lbs/LF)	14.9	16.7	18.6	20.5	22.3	24.2	26.1	27.9	29.8	31.6

3-1/2" POWER BEAM®

Design Property	STANDARD DEPTHS (in inches)							
	8¼	9½	11	12¾	13¾	15¼	16½	17¾
Area (in.²)	29	34	39	43	48	53	58	63
Section Modulus(in.³)	40	54	71	89	110	133	159	186
Moment of Inertia(in.⁴)	164	260	388	553	758	1009	1310	1666
Weight (lbs/LF)	7.6	8.9	10.2	11.4	12.7	14	15.3	16.5

5-1/2" POWER BEAM®

Design Property	STANDARD DEPTHS (in inches)									
	11	12¾	13¾	15¼	16½	17¾	19¼	20¾	22	23¾
Area (in.²)	61	68	76	83	91	98	106	113	121	129
Section Modulus(in.³)	111	140	173	210	250	293	340	390	444	503
Moment of Inertia(in.⁴)	610	869	1191	1586	2059	2618	3269	4021	4880	5854
Weight (lbs/LF)	16	18	20	22	24	26	28	30	32	34

6-3/4" POWER BEAM®

Design Property	STANDARD DEPTHS (in inches)															
	8¼	9½	11	12¾	13¾	15¼	16½	17¾	19¼	20¾	22	23¾	24¾	26¼	27¾	28¾
Area (in.²)	56	65	74	84	93	102	111	121	130	139	149	158	167	176	187	195
Section Modulus(in.³)	77	104	136	172	213	257	306	359	417	479	545	615	689	768	854	938
Moment of Inertia(in.⁴)	316	502	749	1066	1462	1946	2527	3213	4012	4935	5990	7180	8528	10030	11720	13542
Weight (lbs/LF)	14.7	17.1	19.6	22.0	24.5	26.9	29.4	31.8	34.3	36.7	39.2	41.6	44.1	46.5	49.4	51.4

Anthony 24F Power Beam®

Allowable Floor Load Tables LDF=1.0

3-1/8" & 5-1/8" Widths - Standard Depths

Key - for each clear span there are three numbers:
Row 1: Maximum Total Load with LDF of 1.0, and deflection limited to L/240
Row 2: Maximum Live Load limited by deflection of L/360
Row 3: Required Bearing Length in trimmer thickness
(e.g., 1.5 = 1 trimmer, 3.0 = 2 trimmers, etc.)

These tables can be used to size simple span beams and headers that carry uniform loads. The PLF loads must be calculated and take into account all floor and roof framing loads coming onto the beam or header. Codes do allow live load reductions. See appropriate code sections.

Allowable Loads for Anthony Power Beam in Pounds per Linear Foot

Actual Span	3 1/8" Depth (in.)								5 1/8" Depth (in.)									
	8 1/4	9 5/8	11	12 3/8	13 3/4	15 1/8	16 1/2	17 7/8	11	12 3/8	13 3/4	15 1/8	16 1/2	17 7/8	19 1/4	20 5/8	22	23 3/8
6'	1569	2136	2631	3132	3696	4335	5063	5902	4314	5437	6062	7109	8303	9679	11282	13171	15432	18186
	1569	2136	2631	3132	3696	4335	5063	5902	4314	5437	6062	7109	8303	9679	11282	13171	15432	18186
	3	3	4.5	4.5	6	7.5	7.5	9	4.5	4.5	6	7.5	7.5	9	10.5	12	15	18
7'	1151	1567	2049	2496	2909	3364	3868	4430	3380	4193	4770	5517	6344	7266	8299	9466	10793	12317
	1137	1567	2049	2496	2909	3364	3868	4430	3380	4193	4770	5517	6344	7266	8299	9466	10793	12317
	3	3	4.5	4.5	6	6	7.5	7.5	4.5	4.5	6	6	7.5	7.5	9	10.5	12	13.5
8'	879	1198	1566	1984	2397	2748	3129	3543	2569	3253	3931	4508	5131	5814	6562	7385	8296	9308
	762	1198	1566	1984	2397	2748	3129	3543	2569	3253	3931	4508	5131	5814	6562	7385	8296	9308
	3	3	3	4.5	4.5	6	6	7.5	3	4.5	4.5	6	6	7.5	7.5	9	10.5	12
9'	693	945	1236	1565	1933	2322	2626	2954	2026	2567	3171	3807	4307	4844	5424	6052	6734	7478
	535	849	1236	1565	1933	2322	2626	2954	2026	2567	3171	3807	4307	4844	5424	6052	6734	7478
	3	3	3	4.5	4.5	6	6	7.5	3	4.5	4.5	6	6	7.5	7.5	9	9	10.5
10'	560	764	999	1266	1564	1894	2255	2531	1638	2076	2565	3105	3698	4151	4622	5126	5666	6248
	390	619	924	1266	1564	1894	2255	2531	1516	2076	2565	3105	3698	4151	4622	5126	5666	6248
	1.5	3	3	3	4.5	4.5	6	6	3	3	4.5	4.5	6	6	7.5	7.5	9	9
11'	432	630	824	1044	1290	1563	1861	2185	1351	1713	2116	2563	3052	3584	4025	4444	4889	5364
	293	465	694	949	1290	1563	1861	2185	1139	1622	2116	2563	3052	3584	4025	4444	4889	5364
	1.5	3	3	3	4.5	4.5	6	6	3	3	4.5	4.5	6	6	7.5	7.5	7.5	9
12'	332	528	691	876	1082	1311	1562	1834	1133	1438	1775	2150	2561	3008	3490	3922	4299	4698
	220	358	535	762	1045	1311	1562	1834	877	1249	1713	2150	2561	3008	3490	3922	4299	4698
	1.5	1.5	3	3	3	4.5	4.5	6	3	3	3	4.5	4.5	6	6	7.5	7.5	9
13'	259	415	587	745	921	1115	1328	1560	967	1221	1510	1829	2179	2559	2970	3401	3835	4178
	177	282	421	599	822	1094	1328	1560	690	982	1348	1794	2179	2559	2970	3401	3835	4178
	1.5	1.5	3	3	3	4.5	4.5	6	3	3	3	4.5	4.5	6	6	7.5	7.5	7.5
14'	206	330	466	641	792	960	1144	1343	813	1051	1299	1574	1875	2203	2548	2917	3311	3728
	142	226	337	480	658	876	1137	1343	552	787	1079	1436	1864	2203	2548	2917	3311	3728
	1.5	1.5	3	3	3	3	4.5	4.5	3	3	3	3	4.5	4.5	6	6	7.5	7.5
15'	166	267	401	557	689	824	984	1168	658	913	1120	1369	1631	1910	2209	2529	2870	3232
	116	183	274	390	535	712	924	1168	449	640	877	1168	1516	1910	2209	2529	2870	3232
	1.5	1.5	1.5	3	3	3	4.5	4.5	1.5	3	3	3	4.5	4.5	4.5	6	6	7.5
16'	136	219	329	471	604	732	872	1023	540	773	990	1200	1427	1670	1932	2212	2510	2827
	95	151	226	321	441	587	762	968	370	527	722	962	1249	1588	1952	2212	2510	2827
	1.5	1.5	1.5	3	3	3	4.5	4.5	1.5	3	3	3	4.5	4.5	4.5	6	6	7.5
17'	112	181	273	391	504	647	771	906	448	642	875	1060	1256	1472	1705	1950	2214	2493
	79	126	188	268	367	485	635	807	309	439	603	802	1041	1324	1634	1950	2214	2493
	1.5	1.5	1.5	1.5	3	3	3	4.5	1.5	1.5	3	3	3	4.5	4.5	4.5	6	6
18'	93	151	228	328	420	576	686	807	375	538	742	940	1116	1307	1512	1731	1965	2214
	67	106	158	226	310	412	535	680	260	370	508	676	877	1115	1393	1713	1965	2214
	1.5	1.5	1.5	1.5	3	3	3	4.5	1.5	1.5	3	3	3	4.5	4.5	4.5	6	6
19'	78	127	193	277	383	513	614	722	316	455	628	839	997	1167	1350	1547	1756	1978
	57	90	135	192	263	350	455	578	221	315	432	573	746	948	1184	1457	1756	1978
	1.5	1.5	1.5	1.5	3	3	3	4.5	1.5	1.5	3	3	3	3	4.5	4.5	4.5	6
20'	66	108	164	236	327	438	535	631	269	388	536	718	895	1048	1213	1389	1578	1778
	49	77	116	166	226	300	390	496	189	270	370	493	640	813	1016	1249	1516	1778
	1.5	1.5	1.5	1.5	1.5	3	3	3	1.5	1.5	1.5	3	3	3	4.5	4.5	4.5	6
21'	56	92	140	203	281	376	494	589	230	332	460	617	806	946	1095	1254	1425	1605
	42	67	100	142	195	259	337	428	164	233	320	426	552	702	877	1079	1309	1571
	1.5	1.5	1.5	1.5	1.5	3	3	3	1.5	1.5	1.5	3	3	3	4.5	4.5	4.5	6
22'	48	79	121	175	243	326	425	533	198	287	398	534	698	838	993	1138	1292	1456
	37	58	87	124	170	226	290	372	142	203	278	370	480	611	763	938	1139	1366
	1.5	1.5	1.5	1.5	1.5	3	3	3	1.5	1.5	1.5	3	3	3	3	4.5	4.5	4.5
23'	41	68	105	152	211	283	371	474	172	249	346	465	608	777	904	1036	1177	1327
	32	51	76	108	148	197	256	328	125	177	243	324	420	535	668	821	997	1198
	1.5	1.5	1.5	1.5	1.5	1.5	3	3	1.5	1.5	1.5	1.5	3	3	3	4.5	4.5	4.5
24'	35	59	91	132	184	248	325	415	149	217	302	407	532	681	826	947	1076	1213
	28	45	67	95	131	174	226	287	110	156	214	285	370	471	588	723	877	1052
	1.5	1.5	1.5	1.5	1.5	1.5	3	3	1.5	1.5	1.5	1.5	3	3	3	4.5	4.5	4.5
25'	30	51	79	116	162	218	286	366	130	190	265	357	468	600	733	869	987	1113
	25	40	59	84	116	154	200	254	97	138	189	252	327	416	520	640	776	931
	1.5	1.5	1.5	1.5	1.5	1.5	3	3	1.5	1.5	1.5	1.5	3	3	3	3	4.5	4.5
26'	26	45	70	102	142	192	252	321	114	167	234	315	414	530	667	820	909	1023
	22	35	53	75	103	137	177	226	86	123	168	224	291	370	462	569	690	828
	1.5	1.5	1.5	1.5	1.5	1.5	1.5	3	1.5	1.5	1.5	1.5	1.5	3	3	3	4.5	4.5
27'	23	39	61	90	120	170	224	287	100	147	207	279	367	471	592	733	839	946
	20	31	47	67	92	122	158	202	77	110	150	200	260	330	413	508	616	739
	1.5	1.5	1.5	1.5	1.5	1.5	1.5	3	1.5	1.5	1.5	1.5	1.5	3	3	3	4.5	4.5
28'	20	34	54	79	112	151	199	256	88	130	183	248	327	420	528	654	770	878
	18	28	42	60	82	109	142	181	69	98	135	180	233	296	370	455	552	663
	1.5	1.5	1.5	1.5	1.5	1.5	1.5	3	1.5	1.5	1.5	1.5	1.5	3	3	3	3	4.5
29'	17	30	48	70	99	135	178	229	78	116	163	221	292	375	473	586	715	813
	16	25	38	54	74	99	128	163	62	88	121	162	210	267	333	410	497	596
	1.5	1.5	1.5	1.5	1.5	1.5	1.5	1.5	1.5	1.5	1.5	1.5	1.5	1.5	3	3	3	4.5
30'	15	26	42	63	89	121	159	205	69	103	145	198	261	337	425	526	643	756
	14	23	34	49	67	89	116	147	56	80	110	146	189	241	301	370	449	539
	1.5	1.5	1.5	1.5	1.5	1.5	1.5	1.5	1.5	1.5	1.5	1.5	1.5	1.5	3	3	3	4.5
32'	11	20	33	50	71	97	129	166	54	82	116	159	211	273	343	429	525	633
	11	19	28	40	55	73	95	121	46	66	90	120	156	199	248	305	370	444
	1.5	1.5	1.5	1.5	1.5	1.5	1.5	1.5	1.5	1.5	1.5	1.5	1.5	1.5	3	3	3	3

Allowable Roof Load Tables LDF = 1.25

3-1/8" & 5-1/8" Widths - Standard Depths

Key - for each clear span there are three numbers:
Row 1: Maximum Total Load with LDF of 1.25, and deflection limited to L/180
Row 2: Maximum Live Load limited by deflection of L/240
Row 3: Required Bearing Length in trimmer thickness (e.g., 1.5 = 1 trimmer, 3.0 = 2 trimmers, etc.)

These tables can be used to size simple span beams and headers that carry uniform loads. The PLF loads must be calculated and take into account all floor and roof framing loads coming onto the beam or header.

Allowable Loads for Uniform Roof Loads in Pounds per Linear Foot

Actual Span	3 1/8" Depth (in.) 8 1/4	9 5/8	11	12 3/8	13 3/4	15 1/8	16 1/2	17 7/8
6'	1962	2672	3291	3918	4623	5421	6332	7381
	1962	2672	3291	3918	4623	5421	6332	7381
	3	4.5	6	6	7.5	9	10.5	12
7'	1440	1961	2563	3122	3639	4208	4839	5542
	1440	1961	2563	3122	3639	4208	4839	5542
	3	4.5	4.5	6	6	7.5	9	10.5
8'	1101	1500	1960	2482	2999	3438	3915	4435
	1101	1500	1960	2482	2999	3438	3915	4435
	3	3	4.5	4.5	6	7.5	7.5	9
9'	868	1183	1547	1959	2420	2905	3286	3696
	802	1183	1547	1959	2420	2905	3286	3696
	3	3	4.5	4.5	6	6	7.5	9
10'	702	957	1251	1585	1958	2370	2822	3167
	585	929	1251	1585	1958	2370	2822	3167
	3	3	3	4.5	4.5	6	7.5	7.5
11'	579	789	1032	1308	1616	1957	2330	2736
	439	698	1032	1308	1616	1957	2330	2736
	1.5	3	3	4.5	4.5	6	6	7.5
12'	444	662	866	1097	1356	1642	1955	2296
	338	528	802	1097	1356	1642	1955	2296
	1.5	3	3	3	4.5	4.5	6	7.5
13'	348	556	736	933	1154	1397	1664	1954
	266	425	631	899	1154	1397	1664	1954
	1.5	3	3	3	4.5	4.5	6	6
14'	277	443	634	803	993	1203	1433	1683
	213	338	505	719	987	1203	1433	1683
	1.5	1.5	3	3	4.5	4.5	4.5	6
15'	224	359	528	699	864	1046	1246	1464
	173	275	411	585	802	1046	1246	1464
	1.5	1.5	3	3	3	4.5	4.5	6
16'	183	294	442	613	758	918	1094	1285
	143	227	338	482	661	860	1094	1285
	1.5	1.5	3	3	3	4.5	4.5	6
17'	152	244	367	525	670	812	967	1137
	119	189	282	402	551	734	932	1137
	1.5	1.5	1.5	3	3	4.5	4.5	4.5
18'	127	204	308	441	586	725	861	1012
	100	159	238	338	464	618	802	1012
	1.5	1.5	1.5	3	3	3	4.5	4.5
19'	107	172	260	373	515	647	772	907
	85	135	202	288	393	525	682	867
	1.5	1.5	1.5	3	3	3	4.5	4.5
20'	91	147	222	319	440	583	695	817
	73	116	173	247	338	451	585	744
	1.5	1.5	1.5	1.5	3	3	4.5	4.5
21'	77	126	190	274	378	506	629	749
	63	100	150	213	292	389	505	642
	1.5	1.5	1.5	1.5	3	3	3	4.5
22'	66	108	164	237	327	439	572	673
	55	87	130	185	254	338	439	559
	1.5	1.5	1.5	1.5	3	3	3	4.5
23'	57	94	143	206	285	382	499	614
	48	76	114	162	223	296	385	489
	1.5	1.5	1.5	1.5	1.5	3	3	4.5
24'	49	81	124	180	250	335	437	539
	42	67	100	143	196	261	338	430
	1.5	1.5	1.5	1.5	1.5	3	3	3
25'	43	71	109	158	219	295	385	493
	37	59	89	126	173	231	299	381
	1.5	1.5	1.5	1.5	1.5	3	3	3
26'	37	62	96	139	194	261	341	436
	33	53	79	112	154	205	266	338
	1.5	1.5	1.5	1.5	1.5	1.5	3	3
27'	33	55	85	123	172	231	303	388
	30	47	70	100	138	185	238	302
	1.5	1.5	1.5	1.5	1.5	1.5	3	3
28'	29	48	75	109	153	206	270	346
	27	42	63	90	123	164	213	271
	1.5	1.5	1.5	1.5	1.5	1.5	3	3
29'	25	43	66	97	136	184	242	310
	24	38	57	81	111	148	192	244
	1.5	1.5	1.5	1.5	1.5	1.5	3	3
30'	22	38	58	87	122	165	217	279
	22	34	51	73	100	133	173	220
	1.5	1.5	1.5	1.5	1.5	1.5	1.5	3
32'	17	30	47	70	99	134	176	227
	17	28	42	60	83	110	143	182
	1.5	1.5	1.5	1.5	1.5	1.5	1.5	3

Actual Span	5 1/8" Depth (in.) 11	12 3/8	13 3/4	15 1/8	16 1/2	17 7/8	19 1/4	20 5/8	23	23 3/8
6'	5397	6426	7582	8891	10385	12106	14109	16471	19298	22741
	5397	6426	7582	8891	10385	12106	14109	16471	19298	22741
	6	6	7.5	9	10.5	12	13.5	16.5	19.5	24
7'	4203	5121	5968	6901	7936	9089	10381	11840	13499	15404
	4203	5121	5968	6901	7936	9089	10381	11840	13499	15404
	4.5	6	6	7.5	9	10.5	12	13.5	15	18
8'	3215	4071	4919	5838	6820	7874	8209	9238	10377	11643
	3215	4071	4919	5838	6820	7874	8209	9238	10377	11643
	4.5	4.5	6	7.5	7.5	9	10.5	12	13.5	15
9'	2537	3213	3968	4765	5389	6061	6787	7572	8426	9356
	2537	3213	3968	4765	5389	6061	6787	7572	8426	9356
	4.5	4.5	6	6	7.5	9	9	10.5	12	13.5
10'	2052	2599	3211	3887	4628	5194	5784	6414	7091	7818
	2052	2599	3211	3887	4628	5194	5784	6414	7091	7818
	3	4.5	4.5	6	7.5	7.5	9	10.5	10.5	12
11'	1693	2145	2650	3209	3821	4486	5038	5562	6119	6713
	1693	2145	2650	3209	3821	4486	5038	5562	6119	6713
	3	4.5	4.5	6	6	7.5	9	9	10.5	10.5
12'	1420	1800	2224	2693	3207	3766	4369	4909	5381	5880
	1316	1800	2224	2693	3207	3766	4369	4909	5381	5880
	3	3	4.5	4.5	6	7.5	7.5	9	10.5	10.5
13'	1208	1531	1892	2291	2729	3205	3719	4258	4802	5231
	1035	1474	1892	2291	2729	3205	3719	4258	4802	5231
	3	3	4.5	4.5	6	6	7.5	9	9	10.5
14'	1039	1318	1629	1973	2350	2760	3192	3654	4146	4668
	829	1180	1618	1973	2350	2760	3192	3654	4146	4668
	3	3	4.5	4.5	4.5	6	7.5	7.5	9	10.5
15'	883	1146	1416	1716	2044	2394	2768	3168	3595	4048
	674	959	1316	1716	2044	2394	2768	3168	3595	4048
	3	3	3	4.5	4.5	6	6	7.5	7.5	9
16'	725	1005	1243	1506	1790	2094	2421	2772	3146	3542
	555	790	1084	1443	1790	2094	2421	2772	3146	3542
	3	3	3	4.5	4.5	6	6	7.5	7.5	9
17'	602	861	1098	1330	1578	1846	2135	2445	2775	3125
	463	659	904	1203	1562	1846	2135	2445	2775	3125
	1.5	3	3	4.5	4.5	4.5	6	6	7.5	7.5
18'	505	723	978	1181	1401	1639	1896	2171	2464	2776
	390	555	761	1014	1316	1639	1896	2171	2464	2776
	1.5	3	3	3	4.5	4.5	6	6	7.5	7.5
19'	427	612	844	1054	1251	1465	1695	1940	2203	2481
	332	472	647	862	1119	1422	1695	1940	2203	2481
	1.5	3	3	3	4.5	4.5	4.5	6	6	7.5
20'	364	522	721	947	1124	1316	1523	1744	1980	2230
	284	405	555	739	959	1220	1523	1744	1980	2230
	1.5	1.5	3	3	4.5	4.5	4.5	6	6	7.5
21'	312	449	620	830	1015	1189	1375	1575	1788	2015
	246	350	480	638	829	1054	1316	1575	1788	2015
	1.5	1.5	3	3	3	4.5	4.5	4.5	6	6
22'	269	388	537	719	921	1078	1248	1429	1623	1829
	214	304	417	555	721	916	1144	1408	1623	1829
	1.5	1.5	3	3	3	4.5	4.5	4.5	6	6
23'	234	338	468	627	818	982	1137	1302	1479	1666
	187	266	365	486	631	802	1002	1232	1479	1666
	1.5	1.5	1.5	3	3	4.5	4.5	4.5	6	6
24'	204	295	409	549	717	888	1040	1191	1353	1525
	164	234	321	428	555	700	882	1084	1316	1525
	1.5	1.5	1.5	3	3	3	4.5	4.5	4.5	6
25'	179	259	360	483	632	808	954	1093	1242	1400
	146	207	284	378	491	624	780	959	1164	1396
	1.5	1.5	1.5	3	3	3	4.5	4.5	4.5	6
26'	157	228	318	427	559	715	878	1007	1143	1289
	129	184	253	336	437	555	693	853	1035	1241
	1.5	1.5	1.5	1.5	3	3	4.5	4.5	4.5	4.5
27'	139	202	282	379	497	636	799	929	1056	1191
	116	164	226	300	391	496	619	761	924	1109
	1.5	1.5	1.5	1.5	3	3	3	4.5	4.5	4.5
28'	123	179	251	338	443	568	713	861	978	1103
	104	147	202	269	350	444	555	683	829	994
	1.5	1.5	1.5	1.5	3	3	3	4.5	4.5	4.5
29'	109	160	224	302	397	509	639	791	908	1024
	93	133	182	242	315	400	500	615	746	895
	1.5	1.5	1.5	1.5	3	3	3	4.5	4.5	4.5
30'	99	143	200	271	356	457	575	712	845	953
	84	120	164	219	284	361	451	555	674	808
	1.5	1.5	1.5	1.5	1.5	3	3	3	4.5	4.5
32'	77	115	162	220	289	372	469	581	710	831
	69	99	136	180	234	298	372	457	555	666
	1.5	1.5	1.5	1.5	1.5	3	3	3	4.5	4.5

DUCT SYSTEM SUMMARY
Entire House

LARRY RESMONDO A/C

Job: TURKEY RUN LOT 34
10/13/05

715 NW 1ST AVE, HIGH SPRINGS, FL 32643 Phone: 386-454-4433 Fax: 386-454-8843 Email: resmondoac@netcommander.com

Project Information

For: WOODMAN PARK BUILDERS
P.O. BOX 3535, LAKE CITY, FL 32056
Phone: 386-755-2411 Fax: 386-755-1126

	HEATING	COOLING
External Static Pressure:	***0.10*** in H2O	0.00 in H2O
Pressure Losses:	0.50 in H2O	0.50 in H2O
Available Static Pressure:	-0.4 in H2O	-0.5 in H2O
Friction Rate:	***0.100*** in/100ft	***0.100*** in/100ft
Actual AVF:	1150 cfm	1150 cfm

Total Effective Length (TEL): 140 ft

Supply Branch Detail Table

Name	Htg (Btuh)	Clg (Btuh)	Htg (cfm)	Clg (cfm)	Dsn FR	Vel (fpm)	Dia (in)	Rect Sz (in)	Duct Matl	Trnk
WHOLE HOUSE	3983	3883	192	192	0.100	718	7	0x 0	ShMt	st1
WHOLE HOUSE-A	3981	3882	192	192	0.100	717	7	0x 0	ShMt	st1A
WHOLE HOUSE-B	3981	3882	192	192	0.100	717	7	0x 0	ShMt	st1A
WHOLE HOUSE-C	3981	3882	192	192	0.100	717	7	0x 0	ShMt	st1B
WHOLE HOUSE-D	3981	3882	192	192	0.100	717	7	0x 0	ShMt	st1
WHOLE HOUSE-E	3981	3882	192	192	0.100	717	7	0x 0	ShMt	st1

Supply Trunk Detail Table

Name	Trunk Type	Htg (cfm)	Clg (cfm)	Vel (fpm)	Diam (in)	Rect Duct Size (in)	Duct Material	Trunk
st1	Peak AVF	1150	1150	824	16	0 x 0	ShtMetl	
st1A	Peak AVF	575	575	871	11	0 x 0	ShtMetl	st1
st1B	Peak AVF	192	192	717	7	0 x 0	ShtMetl	st1A

Return Branch Detail Table

Name	Diffus Sz (in)	Htg (Btuh)	Clg (Btuh)	Htg (cfm)	Clg (cfm)	Dsn FR	Vel (fpm)	Dia (in)	Rect Sz (in)	Duct Matl	Trunk
rb1	0 x 0	23886	23294	1150	1150	0.100	651	18	0x 0	ShMt	

Bold/italic values have been manually overridden

RIGHT-J BUILDING ANALYSIS REPORT
Entire House

LARRY RESMONDO A/C

Job: TURKEY RUN LOT 34
10/13/05

715 NW 1ST AVE, HIGH SPRINGS, FL 32643 Phone: 386-454-4433 Fax: 386-454-8843 Email: resmondoac@netcommander.com

Project Information

For: WOODMAN PARK BUILDERS
P.O. BOX 3535, LAKE CITY, FL 32056
Phone: 386-755-2411 Fax: 386-755-1126

Design Information

	Htg	Clg
Outside db (°F)	33	92
Inside db (°F)	70	75
Design TD (°F)	37	17
Daily range	-	M
Inside humidity (%)	-	50
Moisture difference (gr/lb)	-	52

Infiltration

Method	Simplified
Construction quality	Average
Fireplaces	0

Heating

Component	Btuh/ft²	Btuh	% of load
Walls	2.7	3646	15.3
Windows	24.6	3985	16.7
Doors	17.0	715	3.0
Ceilings	1.2	2122	8.9
Floors	30.0	4720	19.8
Infiltration	37.1	7559	31.6
Ducts		1137	4.8
Total		**23883**	**100.0**

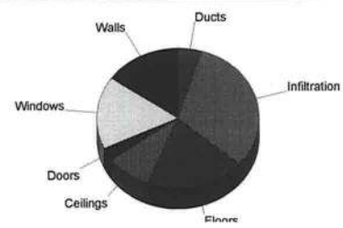

Cooling

Component	Btuh/ft²	Btuh	% of load
Walls	1.5	2049	8.8
Windows	55.2	8941	38.4
Doors	9.5	398	1.7
Ceilings	1.4	2351	10.1
Floors	0.0	0	0.0
Infiltration	8.5	1737	7.5
Ducts		2118	9.1
Internal gains		5700	24.5
Total		**23293**	**100.0**

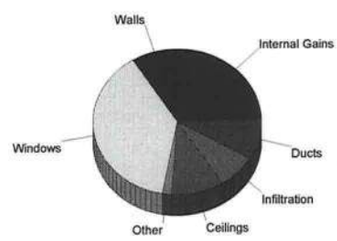

Cooling at 86 % SHR = 2.2 ton
Cooling at 70 % SHR = 2.7 ton
Cooling air flow = 520 cfm/ton
Cooling at 400 cfm/ton = 2.9 ton
Overall U-Value = 0.122 Btuh/ft²-°F

WARNING: window to floor area ratio = 9.3% - less than 10%.

RIGHT-J LOAD AND EQUIPMENT SUMMARY
Entire House
LARRY RESMONDO A/C

Job: TURKEY RUN LOT 34
10/13/05

715 NW 1ST AVE, HIGH SPRINGS, FL 32643 Phone: 386-454-4433 Fax: 386-454-8843 Email: resmondoac@netcommander.com

Project Information

For: WOODMAN PARK BUILDERS
P.O. BOX 3535, LAKE CITY, FL 32056
Phone: 386-755-2411 Fax: 386-755-1126

Notes:

Design Information

Weather: Gainesville, FL, US

Winter Design Conditions

Outside db	33	°F
Inside db	70	°F
Design TD	37	°F

Summer Design Conditions

Outside db	92	°F
Inside db	75	°F
Design TD	17	°F
Daily range	M	
Relative humidity	50	%
Moisture difference	52	gr/lb

Heating Summary

Building heat loss	23883	Btuh
Ventilation air	0	cfm
Ventilation air loss	0	Btuh
Design heat load	23883	Btuh

Infiltration

Method	Simplified
Construction quality	Average
Fireplaces	0

	Heating	Cooling
Area (ft²)	1738	1738
Volume (ft³)	13901	13901
Air changes/hour	0.8	0.4
Equiv. AVF (cfm)	186	93

Sensible Cooling Equipment Load Sizing

Structure	23293	Btuh
Ventilation	0	Btuh
Design temperature swing	3.0	°F
Use mfg. data	n	
Rate/swing multiplier	0.97	
Total sens. equip. load	22595	Btuh

Latent Cooling Equipment Load Sizing

Internal gains	690	Btuh
Ventilation	0	Btuh
Infiltration	3255	Btuh
Total latent equip. load	3945	Btuh
Total equipment load	26540	Btuh

Heating Equipment Summary

Make RUUD AIR COND
Trade Ruud UPMB Series
UPMB-036JA

Efficiency	3.4 HSPF	
Heating input	0	Btuh
Heating output	0	Btuh
Heating temp rise	0	°F
Actual heating fan	1150	cfm
Heating air flow factor	0.048	cfm/Btuh

Space thermostat

Cooling Equipment Summary

Make RUUD AIR COND
Trade Ruud UPMB Series
UPMB-036JA
RCHJ-36A2

Efficiency	12.0 SEER	
Sensible cooling	23660	Btuh
Latent cooling	10140	Btuh
Total cooling	33800	Btuh
Actual cooling fan	1150	cfm
Cooling air flow factor	0.049	cfm/Btuh
Load sensible heat ratio	86	%

Printout certified by ACCA to meet all requirements of Manual J 7th Ed.

RIGHT-J SHORT FORM
Entire House

LARRY RESMONDO A/C

Job: TURKEY RUN LOT 34
10/13/05

715 NW 1ST AVE, HIGH SPRINGS, FL 32643 Phone: 386-454-4433 Fax: 386-454-8843 Email: resmondoac@netcommander.com

Project Information

For: WOODMAN PARK BUILDERS
P.O. BOX 3535, LAKE CITY, FL 32056
Phone: 386-755-2411 Fax: 386-755-1126

Design Information

	Htg	Clg
Outside db (°F)	33	92
Inside db (°F)	70	75
Design TD (°F)	37	17
Daily range	-	M
Inside humidity (%)	-	50
Moisture difference (gr/lb)	-	52

Infiltration

Method	Simplified
Construction quality	Average
Fireplaces	0

HEATING EQUIPMENT

Make RUUD AIR COND
Trade Ruud UPMB Series
UPMB-036JA

Efficiency	3.4 HSPF	
Heating input	0	Btuh
Heating output	0	Btuh
Heating temperature rise	0	°F
Actual heating fan	1150	cfm
Heating air flow factor	0.048	cfm/Btuh

Space thermostat

COOLING EQUIPMENT

Make RUUD AIR COND
Trade Ruud UPMB Series
UPMB-036JA
RCHJ-36A2

Efficiency	12.0 SEER	
Sensible cooling	23660	Btuh
Latent cooling	10140	Btuh
Total cooling	33800	Btuh
Actual cooling fan	1150	cfm
Cooling air flow factor	0.049	cfm/Btuh
Load sensible heat ratio	86	%

ROOM NAME	Area (ft²)	Htg load (Btuh)	Clg load (Btuh)	Htg AVF (cfm)	Clg AVF (cfm)
WHOLE HOUSE	1738	23883	23293	1150	1150
Entire House d	1738	23883	23293	1150	1150
Ventilation air		0	0		
Equip. @ 0.97 RSM			22595		
Latent cooling			3945		
TOTALS	1738	23883	26540	1150	1150

Printout certified by ACCA to meet all requirements of Manual J 7th Ed.

COLUMBIA COUNTY BUILDING DEPARTMENT

RESIDENTIAL MINIMUM PLAN REQUIREMENTS AND CHECKLIST FOR FLORIDA BUILDING CODE 2001 ONE (1) AND TWO (2) FAMILY DWELLINGS

ALL REQUIREMENTS ARE SUBJECT TO CHANGE
EFFECTIVE MARCH 1, 2002

LL BUILDING PLANS MUST INDICATE THE FOLLOWING ITEMS AND INDICATE COMPLIANCE WITH CHAPTER 306 OF THE FLORIDA BUILDING CODE 2001 BY PROVIDING CALCULATIONS AND DETAILS THAT HAVE THE EAL AND SIGNATURE OF A CERTIFIED ARCHITECT OR ENGINEER REGISTERED IN THE STATE OF LORIDA, OR ALTERNATE METHODOLOGIES, APPROVED BY THE STATE OF FLORIDA BUILDING OMMISSION FOR ONE-AND-TWO FAMILY DWELLINGS. FOR DESIGN PURPOSES THE FOLLOWING BASIC IND SPEED AS PER FIGURE 1606 SHALL BE USED.

WIND SPEED LINE SHALL BE DEFINED AS FOLLOWS: THE CENTERLINE OF INTERSTATE 75.
1. ALL BUILDINGS CONSTRUCTED EAST OF SAID LINE SHALL BE -------- 100 MPH
2. ALL BUILDINGS CONSTRUCTED WEST OF SAID LINE SHALL BE --------110 MPH
3. NO AREA IN COLUMBIA COUNTY IS IN A WIND BORNE DEBRIS REGION

PPLICANT – PLEASE CHECK ALL APPLICABLE BOXES BEFORE SUBMITTAL

ENERAL REQUIREMENTS; Two (2) complete sets of plans containing the following:

pplicant	Plans Examiner	
	☑	All drawings must be clear, concise and drawn to scale ("Optional " details that are not used shall be marked void or crossed off). Square footage of different areas shall be shown on plans.
	☑	Designers name and signature on document (FBC 104.2.1). If licensed architect or engineer, official seal shall be affixed.
	☑	**Site Plan including:** a) Dimensions of lot b) Dimensions of building set backs c) Location of all other buildings on lot, well and septic tank if applicable, and all utility easements. d) Provide a full legal description of property.
	☑	**Wind-load Engineering Summary, calculations and any details required** a) Plans or specifications must state compliance with FBC Section 1606 b) The following information must be shown as per section 1606.1.7 FBC a. Basic wind speed (MPH) b. Wind importance factor (I) and building category c. Wind exposure – if more than one wind exposure is used, the wind exposure and applicable wind direction shall be indicated d. The applicable internal pressure coefficient e. *Components and Cladding. The design wind pressure in terms of psf (kN/m²), to be used for the design of exterior component and cladding materials not specifically designed by the registered design professional*
	☐	**Elevations including:**
	☑	a) All sides
	☐ See note #	b) Roof pitch
	☐	c) Overhang dimensions and detail with attic ventilation
	☑	d) Location, size and height above roof of chimneys
	☑	e) Location and size of skylights
	☐	f) Building height
	☐	e) Number of stories

☐ **b) Wood frame wall**

1. All materials making up wall
2. Size and species of studs
3. Sheathing size, type and nailing schedule
4. Headers sized
5. Gable end showing balloon framing detail or gable truss and wall hinge bracing detail
6. All required fasteners for continuous tie from roof to foundation (truss anchors, straps, anchor bolts and washers)
7. Roof assembly shown here or on roof system detail (FBC104.2.1 Roofing system, materials, manufacturer, fastening requirements and product evaluation with wind resistance rating)
8. Fire resistant construction (if applicable)
9. Fireproofing requirements
10. Show type of termite treatment (termicide or alternative method)
11. Slab on grade
    a. Vapor retardant (6Mil. Polyethylene with joints lapped 6 inches and sealed
    b. Must show control joints, synthetic fiber reinforcement or welded wire fabric reinforcement and supports
12. Indicate where pressure treated wood will be placed
13. Provide insulation R value for the following:
    a. Attic space
    b. Exterior wall cavity
    c. Crawl space (if applicable)

☐ c) Metal frame wall and roof (designed, signed and sealed by Florida Prof. Engineer or Architect)

Floor Framing System:

☐ a) Floor truss package including layout and details, signed and sealed by Florida Registered Professional Engineer

☐ b) Floor joist size and spacing

☐ c) Girder size and spacing

☐ d) Attachment of joist to girder

☐ e) Wind load requirements where applicable

☐ **Plumbing Fixture layout**

Electrical layout including:

☐ a) Switches, outlets/receptacles, lighting and all required GFCI outlets identified

☐ b) Ceiling fans

☐ c) Smoke detectors

☐ d) Service panel and sub-panel size and location(s)

☐ e) Meter location with type of service entrance (overhead or underground)

☐ f) Appliances and HVAC equipment

☐ g) Arc Fault Circuits (AFCI) in bedrooms

HVAC information

☐ a) Manual J sizing equipment or equivalent computation

☐ b) Exhaust fans in bathroom

☐ **Energy Calculations** (dimensions shall match plans)

☐ **Gas System** Type (LP or Natural) Location and BTU demand of equipment

☐ **Disclosure Statement for Owner Builders**

☐ ***Notice Of Commencement Required Before Any Inspections Will Be Done

☐ **Private Potable Water**

a) Size of pump motor

b) Size of pressure tank

c) Cycle stop valve if used

Floor Plan including:

☑ a) Rooms labeled and dimensioned

☑ b) Shear walls

☑ c) Windows and doors (including garage doors) showing size, mfg., approval listing and attachment specs. (FBC 1707) and safety glazing where needed (egress windows in bedrooms to be shown)

☑ d) Fireplaces (gas appliance) (vented or non-vented) or wood burning with hearth

☑ e) Stairs with dimensions (width, tread and riser) and details of guardrails and handrails

☑ f) Must show and identify accessibility requirements (accessible bathroom)

Foundation Plan including:

☑ a) Location of all load-bearing wall with required footings indicated as standard Or monolithic and dimensions and reinforcing

☑ b) All posts and/or column footing including size and reinforcing

☑ c) Any special support required by soil analysis such as piling

☑ d) Location of any vertical steel

Roof System:

☑ a) Truss package including:

1. Truss layout and truss details signed and sealed by Fl. Pro. Eng.
2. Roof assembly (FBC 104.2.1 Roofing system, materials, manufacturer, fastening requirements and product evaluation with wind resistance rating)

☐ b) Conventional Framing Layout including:

1. Rafter size, species and spacing
2. Attachment to wall and uplift
3. Ridge beam sized and valley framing and support details
4. Roof assembly (FBC 104.2.1 Roofing systems, materials, manufacturer, fastening requirements and product evaluation with wind resistance rating)

Wall Sections including:

☐ a) Masonry wall

1. All materials making up wall
2. Block size and mortar type with size and spacing of reinforcement
3. Lintel, tie-beam sizes and reinforcement
4. Gable ends with rake beams showing reinforcement or gable truss and wall bracing details
5. All required connectors with uplift rating and required number and size of fasteners for continuous tie from roof to foundation
6. Roof assembly shown here or on roof system detail (FBC 104.2.1 Roofing system, materials, manufacturer, fastening requirements and product evaluation with resistance rating)
7. Fire resistant construction (if required)
8. Fireproofing requirements
9. Shoe type of termite treatment (termicide or alternative method)
10. Slab on grade
    a. Vapor retardant (6mil. Polyethylene with joints lapped 6 inches and sealed)
    b. Must show control joints, synthetic fiber reinforcement or Welded fire fabric reinforcement and supports
11. Indicate where pressure treated wood will be placed
12. Provide insulation R value for the following:
    a. Attic space
    b. Exterior wall cavity
    c. Crawl space (if applicable)

Information for: L134662
WOODMAN PARK
LOT 34 TURKEY RUN
N/A
ALACHUA COUNTY
43

Date: 9/30/2005
Start Number: 016

Truss Design Load Information (UNO) Design Program: MiTek 5.2 / 6.2

Gravity		**Wind**		**Building Code:**	FBC2001
Roof (psf):	42	Wind Standard:	ASCE 7-98		
Floor (psf):	55	Wind Speed (mph):	110		

Note: See individual truss drawings for special loading conditions

Building Designer, responsible for Structural Engineering: (See attached)
WOOD, WILLIAM G. CBC058182
Address: PO BOX 3535
DAYTONA BCH FL. 32118
Designer: 126

Truss Design Engineer: Thomas, E. Miller, P.E., 56877 - Byron K. Anderson, PE FL 60987
Company: Structural Engineering and Inspections, Inc. EB 9196
Address 16105 N. Florida Ave, Ste B, Lutz, FL 33549

Notes:
1. Truss Design Engineer is responsible for the individual trusses as components only.
2. Determination as to the suitability and use of these truss components for the structure is the responsibility of the Building Designer of Record, as defined in ANSI/TPI 1-1995 Section 2.2
3. The seal date shown on the individual truss component drawings must match the seal date on this index sheet.

#	Truss ID	Dwg. #	Seal Date	#	Truss ID	Dwg. #	Seal Date
1	CJ1	093005016	9/30/2005	41	T26	093005056	9/30/2005
2	CJ3	093005017	9/30/2005	42	T27	093005057	9/30/2005
3	CJ3B	093005018	9/30/2005	43	T28	093005058	9/30/2005
4	CJ5	093005019	9/30/2005				
5	EJ5	093005020	9/30/2005				
6	EJ5A	093005021	9/30/2005				
7	EJ5B	093005022	9/30/2005				
8	EJ7	093005023	9/30/2005				
9	HJ7	093005024	9/30/2005				
10	HJ7A	093005025	9/30/2005				
11	HJ7B	093005026	9/30/2005				
12	HJ9	093005027	9/30/2005				
13	T01	093005028	9/30/2005				
14	T02	093005029	9/30/2005				
15	T03	093005030	9/30/2005				
16	T04	093005031	9/30/2005				
17	T05	093005032	9/30/2005				
18	T06	093005033	9/30/2005				
19	T07	093005034	9/30/2005				
20	T08	093005035	9/30/2005				
21	T09	093005036	9/30/2005				
22	T10	093005037	9/30/2005				
23	T10A	093005038	9/30/2005				
24	T11	093005039	9/30/2005				
25	T11A	093005040	9/30/2005				
26	T12	093005041	9/30/2005				
27	T13	093005042	9/30/2005				
28	T14	093005043	9/30/2005				
29	T15	093005044	9/30/2005				
30	T15A	093005045	9/30/2005				
31	T16	093005046	9/30/2005				
32	T17	093005047	9/30/2005				
33	T18	093005048	9/30/2005				
34	T19	093005049	9/30/2005				
35	T20	093005050	9/30/2005				
36	T21	093005051	9/30/2005				
37	T22	093005052	9/30/2005				
38	T23	093005053	9/30/2005				
39	T24	093005054	9/30/2005				
40	T25	093005055	9/30/2005				

SEP 30 2005

Dwg.#093005015

Licensee Details

Licensee Information

Name:	**WOOD, WILLIAM G (Primary Name)**
	WOODMAN PARK BUILDERS INC (DBA Nam
Main Address:	**P.O.BOX 3535** **LAKE CITY Florida 32026**
License Mailing:	
LicenseLocation:	**P.O.BOX 3535** **LAKE CITY FL 32026**

License Information

License Type:	**Certified Building Contractor**
Rank:	**Cert Building**
License Number:	**CBC058182**
Status:	**Current,Active**
Licensure Date:	**10/06/1997**
Expires:	**08/31/2006**

View Related License Information

View License Complaint

SEPTEMBER 30, 2005 TRUSS DESIGN ENGINEER:
THOMAS E. MILLER PE 56877, BYRON K. ANDERSON PE 60987
STRUCTURAL DESIGN AND INSPECTIONS, INC. EB 9196
16105 N. FLORIDA AVE. STE B, LUTZ, FL 33549

Job	Truss	Truss Type	Qty	Ply	WOODMAN PARK LOT 34 TURKEY RUN	Dwg.#093005016
L134662	CJ1	MONO TRUSS	18	1	Job Reference (optional)	

Builders FirstSource, Lake City, Fl 32055 — 6.200 s Jul 13 2005 MiTek Industries, Inc. Thu Sep 29 10:17:46 2005 Page 1

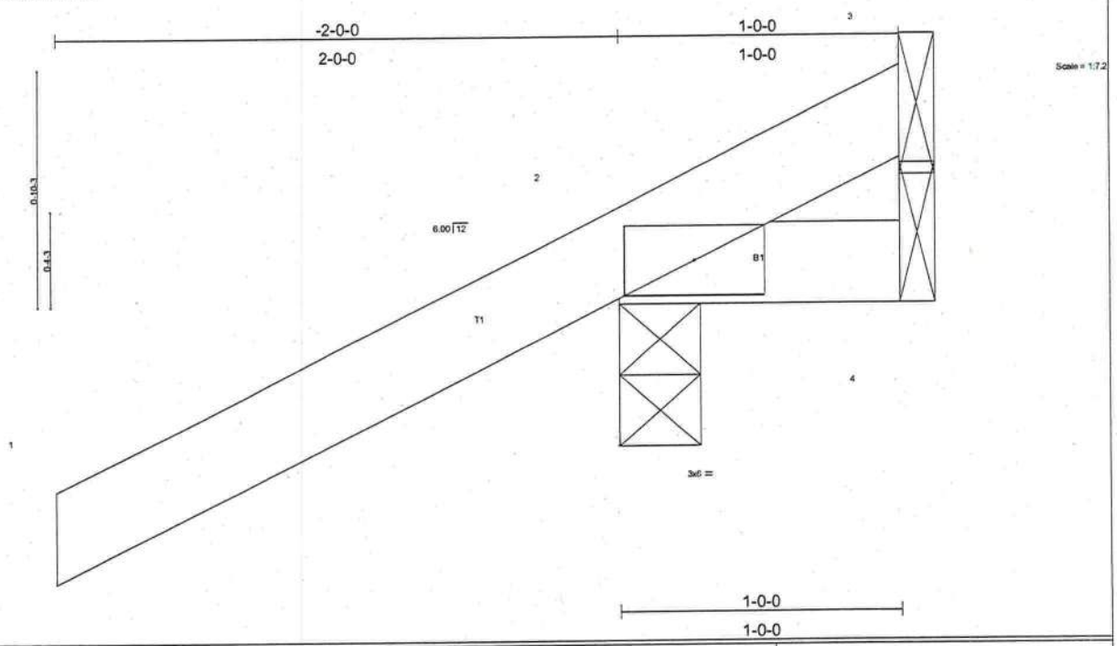

LOADING (psf)		SPACING	2-0-0	CSI		DEFL	in	(loc)	l/defl	L/d	PLATES	GRIP
TCLL	20.0	Plates Increase	1.25	TC	0.24	Vert(LL)	-0.00	2	>999	240	MT20	244/190
TCDL	7.0	Lumber Increase	1.25	BC	0.01	Vert(TL)	-0.00	2	>999	180		
BCLL	10.0	Rep Stress Incr	YES	WB	0.00	Horz(TL)	0.00	3	n/a	n/a		
BCDL	5.0	Code	FBC2001/ANSI95	(Matrix)							Weight: 7 lb	

LUMBER
TOP CHORD 2 X 4 SYP No.2D
BOT CHORD 2 X 4 SYP No.2D

BRACING
TOP CHORD Sheathed or 1-0-0 oc purlins.
BOT CHORD Rigid ceiling directly applied or 10-0-0 oc bracing.

REACTIONS (lb/size) 2=266/0-3-8, 4=14/Mechanical, 3=-90/Mechanical
Max Horz 2=87(load case 5)
Max Uplift2=-286(load case 5), 4=-9(load case 3), 3=-90(load case 1)
Max Grav 2=266(load case 1), 4=14(load case 1), 3=127(load case 5)

FORCES (lb) - Maximum Compression/Maximum Tension
TOP CHORD 1-2=0/47, 2-3=-69/71
BOT CHORD 2-4=0/0

NOTES
1) Wind: ASCE 7-98; 110mph (3-second gust); h=20ft; TCDL=4.2psf; BCDL=3.0psf; Category II; Exp B; enclosed; MWFRS gable end zone and C-C Exterior(2) zone; porch left and right exposed; Lumber DOL=1.60 plate grip DOL=1.60. This truss is designed for C-C for members and forces, and for MWFRS for reactions specified.
2) Refer to girder(s) for truss to truss connections.
3) Provide mechanical connection (by others) of truss to bearing plate capable of withstanding 286 lb uplift at joint 2, 9 lb uplift at joint 4 and 90 lb uplift at joint 3.

LOAD CASE(S) Standard

SEPTEMBER 30, 2005 TRUSS DESIGN ENGINEER:
THOMAS E. MILLER PE 56877, BYRON K. ANDERSON PE 60987
STRUCTURAL ENGINEERING AND INSPECTIONS, INC. EB 9196
16105 N. FLORIDA AVE. STE B, LUTZ, FL 33549

Job	Truss	Truss Type	Qty	Ply	WOODMAN PARK LOT 34 TURKEY RUN
L134662	CJ3	MONO TRUSS	14	1	Job Reference (optional)

Dwg.#093005017

Builders FirstSource, Lake City, Fl 32055 — 6.200 s Jul 13 2005 MiTek Industries, Inc. Thu Sep 29 10:17:47 2005 Page 1

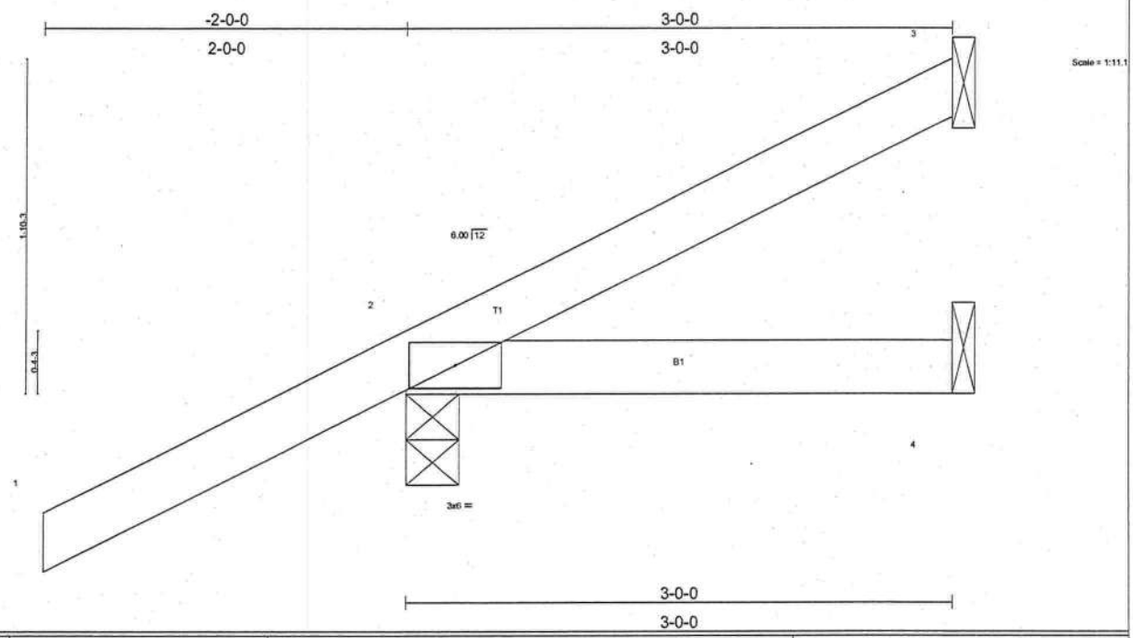

LOADING (psf)		SPACING	2-0-0	CSI		DEFL	in	(loc)	l/defl	L/d	PLATES	GRIP
TCLL	20.0	Plates Increase	1.25	TC	0.26	Vert(LL)	0.01	2-4	>999	240	MT20	244/190
TCDL	7.0	Lumber Increase	1.25	BC	0.07	Vert(TL)	0.01	2-4	>999	180		
BCLL	10.0	Rep Stress Incr	YES	WB	0.00	Horz(TL)	-0.00	3	n/a	n/a		
BCDL	5.0	Code FBC2001/ANSI95		(Matrix)							Weight: 13 lb	

LUMBER
TOP CHORD 2 X 4 SYP No.2D
BOT CHORD 2 X 4 SYP No.2D

BRACING
TOP CHORD Sheathed or 3-0-0 oc purlins.
BOT CHORD Rigid ceiling directly applied or 10-0-0 oc bracing.

REACTIONS (lb/size) 3=31/Mechanical, 2=278/0-3-8, 4=42/Mechanical
Max Horz 2=132(load case 5)
Max Uplift3=-25(load case 4), 2=-238(load case 5), 4=-27(load case 3)

FORCES (lb) - Maximum Compression/Maximum Tension
TOP CHORD 1-2=0/47, 2-3=-57/7
BOT CHORD 2-4=0/0

NOTES
1) Wind: ASCE 7-98; 110mph (3-second gust); h=20ft; TCDL=4.2psf; BCDL=3.0psf; Category II; Exp B; enclosed; MWFRS gable end zone and C-C Exterior(2) zone; porch left and right exposed; Lumber DOL=1.60 plate grip DOL=1.60. This truss is designed for C-C for members and forces, and for MWFRS for reactions specified.
2) Refer to girder(s) for truss to truss connections.
3) Provide mechanical connection (by others) of truss to bearing plate capable of withstanding 25 lb uplift at joint 3, 238 lb uplift at joint 2 and 27 lb uplift at joint 4.

LOAD CASE(S) Standard

SEPTEMBER 30, 2005 TRUSS DESIGN ENGINEER:
THOMAS E. MILLER PE 56877, BYRON K. ANDERSON PE 60987
STRUCTURAL ENGINEERING AND INSPECTIONS, INC. EB 9196
16105 N. FLORIDA AVE. STE B, LUTZ, FL 33549

Job	Truss	Truss Type	Qty	Ply	WOODMAN PARK LOT 34 TURKEY RUN
L134662	CJ3B	SPECIAL	4	1	Job Reference (optional)

Dwg.#093005018

Builders FirstSource, Lake City, Fl 32055

6.200 s Jul 13 2005 MiTek Industries, Inc. Thu Sep 29 10:17:47 2005 Page 1

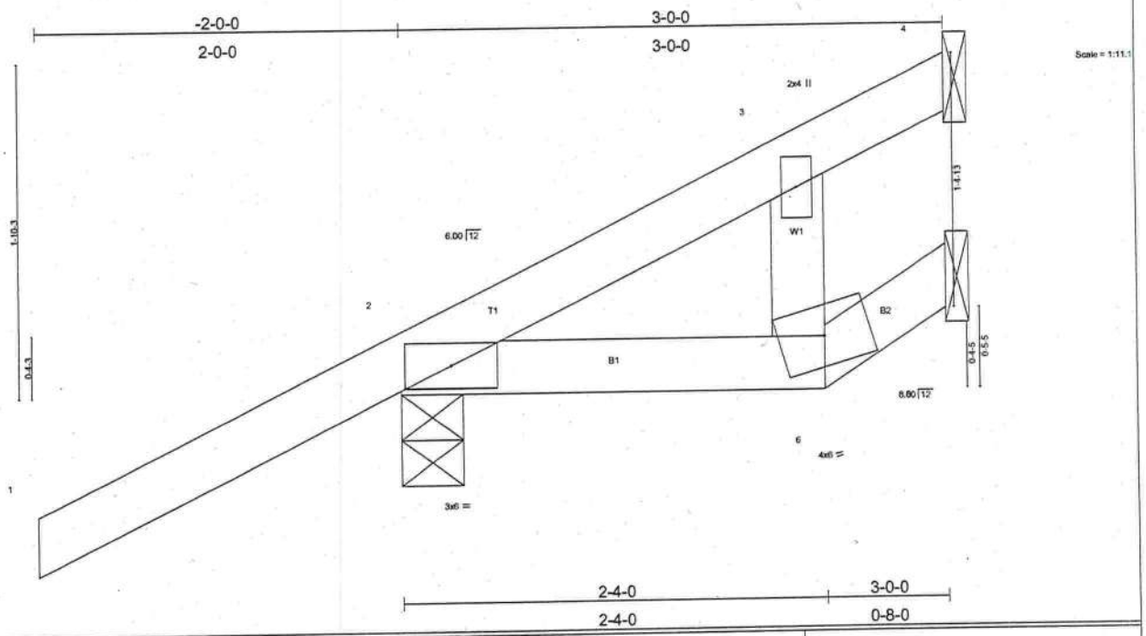

LOADING (psf)		SPACING	2-0-0	CSI		DEFL	in	(loc)	l/defl	L/d	PLATES	GRIP
TCLL	20.0	Plates Increase	1.25	TC	0.26	Vert(LL)	-0.01	6	>999	240	MT20	244/190
TCDL	7.0	Lumber Increase	1.25	BC	0.03	Vert(TL)	-0.01	6	>999	180		
BCLL	10.0	Rep Stress Incr	YES	WB	0.01	Horz(TL)	-0.00	5	n/a	n/a		
BCDL	5.0	Code FBC2001/ANSI95		(Matrix)							Weight: 15 lb	

LUMBER
TOP CHORD 2 X 4 SYP No.2D
BOT CHORD 2 X 4 SYP No.2D
WEBS 2 X 4 SYP No.3

BRACING
TOP CHORD Sheathed or 3-0-0 oc purlins.
BOT CHORD Rigid ceiling directly applied or 6-0-0 oc bracing.

REACTIONS (lb/size) 4=62/Mechanical, 2=279/0-4-0, 5=9/Mechanical
Max Horz 2=132(load case 5)
Max Uplift4=-18(load case 4), 2=-205(load case 5)

FORCES (lb) - Maximum Compression/Maximum Tension
TOP CHORD 1-2=0/47, 2-3=-59/3, 3-4=-28/26
BOT CHORD 2-6=-6/0, 5-6=-4/4
WEBS 3-6=0/42

NOTES
1) Wind: ASCE 7-98; 110mph (3-second gust); h=20ft; TCDL=4.2psf; BCDL=3.0psf; Category II; Exp B; enclosed; MWFRS gable end zone and C-C Exterior(2) zone; Lumber DOL=1.60 plate grip DOL=1.60. This truss is designed for C-C for members and forces, and for MWFRS for reactions specified.
2) Refer to girder(s) for truss to truss connections.
3) Provide mechanical connection (by others) of truss to bearing plate capable of withstanding 18 lb uplift at joint 4 and 205 lb uplift at joint 2.

LOAD CASE(S) Standard

SEPTEMBER 30, 2005 TRUSS DESIGN ENGINEER:
THOMAS E. MILLER PE 56877, BYRON K. ANDERSON PE 60987
STRUCTURAL ENGINEERING AND INSPECTIONS, INC. EB 9196
16105 N. FLORIDA AVE. STE B, LUTZ, FL 33549

Job	Truss	Truss Type	Qty	Ply	WOODMAN PARK LOT 34 TURKEY RUN
L134662	CJ5	MONO TRUSS	10	1	Job Reference (optional)

Dwg.#093005019

Builders FirstSource, Lake City, Fl 32055 — 6.200 s Jul 13 2005 MiTek Industries, Inc. Thu Sep 29 10:17:48 2005 Page 1

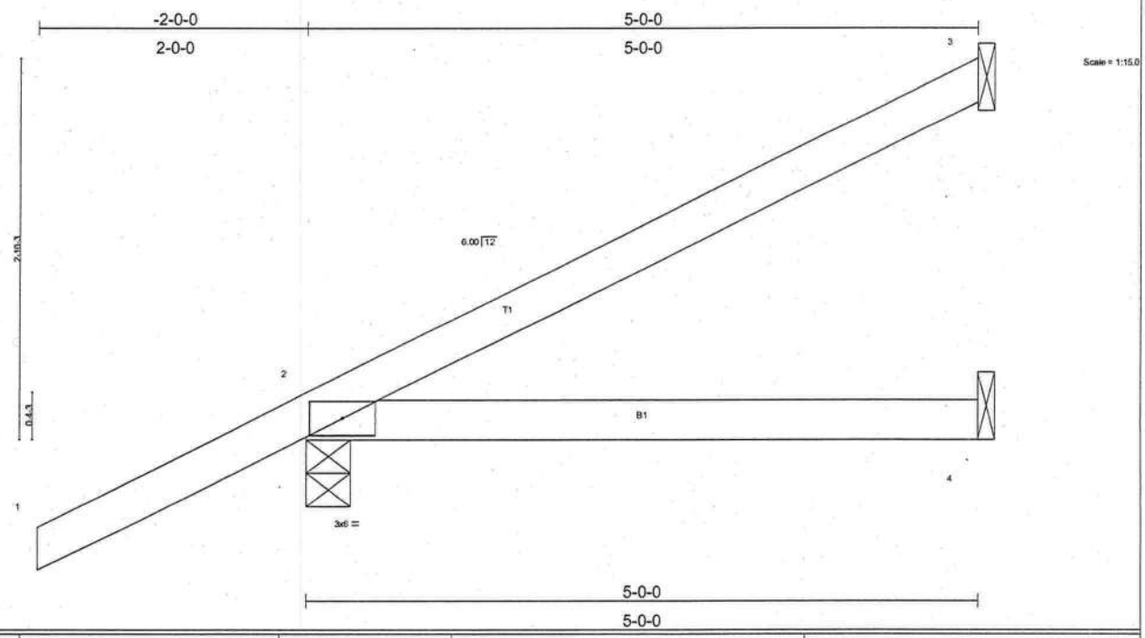

LOADING (psf)		SPACING	2-0-0	CSI		DEFL	in	(loc)	l/defl	L/d	PLATES	GRIP
TCLL	20.0	Plates Increase	1.25	TC	0.26	Vert(LL)	0.08	2-4	>713	240	MT20	244/190
TCDL	7.0	Lumber Increase	1.25	BC	0.20	Vert(TL)	0.07	2-4	>789	180		
BCLL	10.0	Rep Stress Incr	YES	WB	0.00	Horz(TL)	-0.00	3	n/a	n/a		
BCDL	5.0	Code FBC2001/ANSI95		(Matrix)							Weight: 19 lb	

LUMBER
TOP CHORD 2 X 4 SYP No.2D
BOT CHORD 2 X 4 SYP No.2D

BRACING
TOP CHORD Sheathed or 5-0-0 oc purlins.
BOT CHORD Rigid ceiling directly applied or 10-0-0 oc bracing.

REACTIONS (lb/size) 3=102/Mechanical, 2=344/0-4-0, 4=72/Mechanical
Max Horz 2=178(load case 5)
Max Uplift3=-86(load case 5), 2=-261(load case 5), 4=-46(load case 3)

FORCES (lb) - Maximum Compression/Maximum Tension
TOP CHORD 1-2=0/47, 2-3=-108/36
BOT CHORD 2-4=0/0

NOTES
1) Wind: ASCE 7-98; 110mph (3-second gust); h=20ft; TCDL=4.2psf; BCDL=3.0psf; Category II; Exp B; enclosed; MWFRS gable end zone and C-C Exterior(2) zone; porch left and right exposed; Lumber DOL=1.60 plate grip DOL=1.60. This truss is designed for C-C for members and forces, and for MWFRS for reactions specified.
2) Refer to girder(s) for truss to truss connections.
3) Provide mechanical connection (by others) of truss to bearing plate capable of withstanding 86 lb uplift at joint 3, 261 lb uplift at joint 2 and 46 lb uplift at joint 4.

LOAD CASE(S) Standard

SEPTEMBER 30, 2005 TRUSS DESIGN ENGINEER:
THOMAS E. MILLER PE 56877, BYRON K. ANDERSON PE 60987
STRUCTURAL ENGINEERING AND INSPECTIONS, INC. EB 9196
16105 N. FLORIDA AVE. STE B, LUTZ, FL 33549

Job	Truss	Truss Type	Qty	Ply	WOODMAN PARK LOT 34 TURKEY RUN
L134662	EJ5	MONO TRUSS	2	1	Job Reference (optional)

Dwg.#093005020

Builders FirstSource, Lake City, Fl 32055 — 6.200 s Jul 13 2005 MiTek Industries, Inc. Thu Sep 29 10:17:48 2005 Page 1

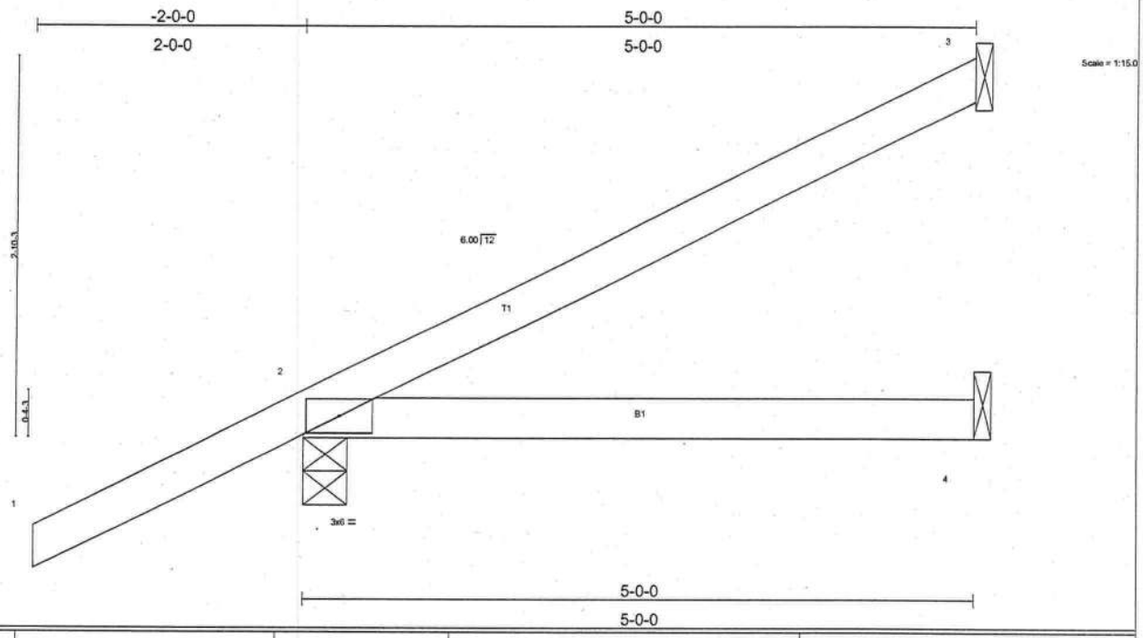

LOADING (psf)		SPACING 2-0-0		CSI		DEFL	in	(loc)	l/defl	L/d	PLATES	GRIP
TCLL	20.0	Plates Increase	1.25	TC	0.26	Vert(LL)	0.08	2-4	>713	240	MT20	244/190
TCDL	7.0	Lumber Increase	1.25	BC	0.20	Vert(TL)	0.07	2-4	>789	180		
BCLL	10.0	Rep Stress Incr	YES	WB	0.00	Horz(TL)	-0.00	3	n/a	n/a		
BCDL	5.0	Code FBC2001/ANSI95		(Matrix)							Weight: 19 lb	

LUMBER
TOP CHORD 2 X 4 SYP No.2D
BOT CHORD 2 X 4 SYP No.2D

BRACING
TOP CHORD Sheathed or 5-0-0 oc purlins.
BOT CHORD Rigid ceiling directly applied or 10-0-0 oc bracing.

REACTIONS (lb/size) 3=102/Mechanical, 2=344/0-4-0, 4=72/Mechanical
Max Horz 2=178(load case 5)
Max Uplift3=-86(load case 5), 2=-261(load case 5), 4=-46(load case 3)

FORCES (lb) - Maximum Compression/Maximum Tension
TOP CHORD 1-2=0/47, 2-3=-108/36
BOT CHORD 2-4=0/0

NOTES
1) Wind: ASCE 7-98; 110mph (3-second gust); h=20ft; TCDL=4.2psf; BCDL=3.0psf; Category II; Exp B; enclosed; MWFRS gable end zone and C-C Exterior(2) zone; porch left and right exposed; Lumber DOL=1.60 plate grip DOL=1.60. This truss is designed for C-C for members and forces, and for MWFRS for reactions specified.
2) Refer to girder(s) for truss to truss connections.
3) Provide mechanical connection (by others) of truss to bearing plate capable of withstanding 86 lb uplift at joint 3, 261 lb uplift at joint 2 and 46 lb uplift at joint 4.

LOAD CASE(S) Standard

SEPTEMBER 30, 2005 TRUSS DESIGN ENGINEER:
THOMAS E. MILLER PE 56877, BYRON K. ANDERSON PE 60987
STRUCTURAL ENGINEERING AND INSPECTIONS, INC. EB 9196
16105 N. FLORIDA AVE. STE B, LUTZ, FL 33549

Job	Truss	Truss Type	Qty	Ply	WOODMAN PARK LOT 34 TURKEY RUN
L134662	EJ5A	SPECIAL	4	1	Job Reference (optional)

Dwg.#093005021

Builders FirstSource, Lake City, Fl 32055

6.200 s Jul 13 2005 MiTek Industries, Inc. Thu Sep 29 10:17:49 2005 Page 1

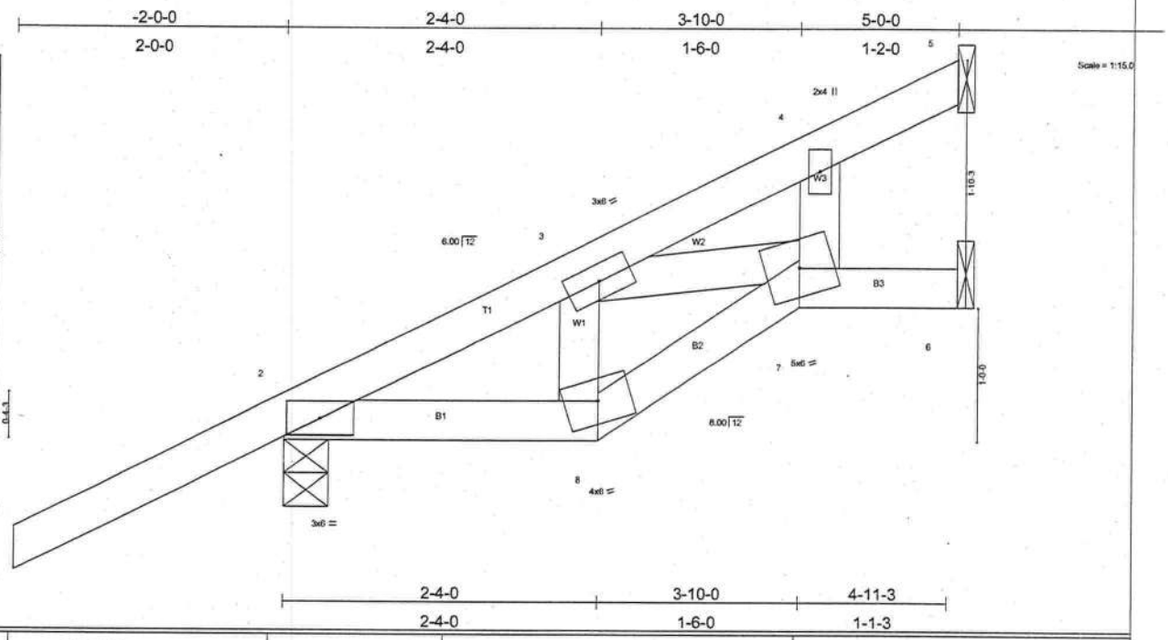

LOADING (psf)		SPACING	2-0-0	CSI		DEFL	in	(loc)	l/defl	L/d	PLATES	GRIP
TCLL	20.0	Plates Increase	1.25	TC	0.26	Vert(LL)	0.03	7	>999	240	MT20	244/190
TCDL	7.0	Lumber Increase	1.25	BC	0.05	Vert(TL)	0.02	7	>999	180		
BCLL	10.0	Rep Stress Incr	YES	WB	0.05	Horz(TL)	-0.01	6	n/a	n/a		
BCDL	5.0	Code FBC2001/ANSI95		(Matrix)							Weight: 25 lb	

LUMBER
TOP CHORD 2 X 4 SYP No.2D
BOT CHORD 2 X 4 SYP No.2D
WEBS 2 X 4 SYP No.3

BRACING
TOP CHORD Sheathed or 5-0-0 oc purlins.
BOT CHORD Rigid ceiling directly applied or 10-0-0 oc bracing.

REACTIONS (lb/size) 5=157/Mechanical, 2=344/0-4-0, 6=17/Mechanical
Max Horz 2=178(load case 5)
Max Uplift5=-75(load case 5), 2=-201(load case 5)

FORCES (lb) - Maximum Compression/Maximum Tension
TOP CHORD 1-2=0/47, 2-3=-228/30, 3-4=-80/0, 4-5=-85/68
BOT CHORD 2-8=-146/152, 7-8=-162/186, 6-7=-0/0
WEBS 3-8=-42/99, 3-7=-125/120, 4-7=-90/147

NOTES
1) Wind: ASCE 7-98; 110mph (3-second gust); h=20ft; TCDL=4.2psf; BCDL=3.0psf; Category II; Exp B; enclosed; MWFRS gable end zone and C-C Exterior(2) zone; Lumber DOL=1.60 plate grip DOL=1.60. This truss is designed for C-C for members and forces, and for MWFRS for reactions specified.
2) Refer to girder(s) for truss to truss connections.
3) Provide mechanical connection (by others) of truss to bearing plate capable of withstanding 75 lb uplift at joint 5 and 201 lb uplift at joint 2.

LOAD CASE(S) Standard

SEPTEMBER 30, 2005 TRUSS DESIGN ENGINEER:
THOMAS E. MILLER PE 56877, BYRON K. ANDERSON PE 60987
STRUCTURAL ENGINEERING AND INSPECTIONS, INC. EB 9196
16105 N. FLORIDA AVE. STE B, LUTZ, FL 33549

Job	Truss	Truss Type	Qty	Ply	WOODMAN PARK LOT 34 TURKEY RUN
L134662	EJ5B	MONO TRUSS	3	1	Job Reference (optional)

Dwg.#093005022

Builders FirstSource, Lake City, Fl 32055

6.200 s Jul 13 2005 MiTek Industries, Inc. Thu Sep 29 10:17:59 2005 Page 1

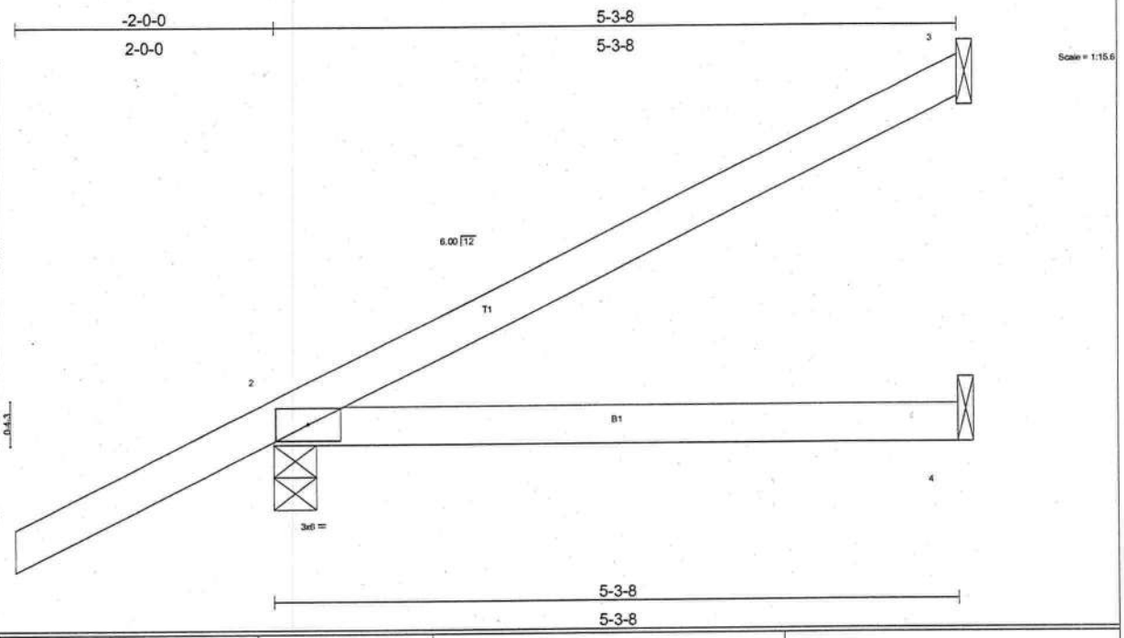

LOADING (psf)		SPACING	2-0-0	CSI		DEFL	in	(loc)	l/defl	L/d	PLATES	GRIP
TCLL	20.0	Plates Increase	1.25	TC	0.28	Vert(LL)	0.10	2-4	>598	240	MT20	244/190
TCDL	7.0	Lumber Increase	1.25	BC	0.23	Vert(TL)	0.09	2-4	>661	180		
BCLL	10.0	Rep Stress Incr	YES	WB	0.00	Horz(TL)	-0.00	3	n/a	n/a		
BCDL	5.0	Code FBC2001/ANSI95		(Matrix)							Weight: 20 lb	

LUMBER
TOP CHORD 2 X 4 SYP No.2D
BOT CHORD 2 X 4 SYP No.2D

BRACING
TOP CHORD Sheathed or 5-3-8 oc purlins.
BOT CHORD Rigid ceiling directly applied or 10-0-0 oc bracing.

REACTIONS (lb/size) 3=112/Mechanical, 2=355/0-4-0, 4=76/Mechanical
Max Horz 2=184(load case 5)
Max Uplift3=-96(load case 5), 2=-265(load case 5), 4=-48(load case 3)

FORCES (lb) - Maximum Compression/Maximum Tension
TOP CHORD 1-2=0/47, 2-3=-116/39
BOT CHORD 2-4=0/0

NOTES
1) Wind: ASCE 7-98; 110mph (3-second gust); h=20ft; TCDL=4.2psf; BCDL=3.0psf; Category II; Exp B; enclosed; MWFRS gable end zone and C-C Exterior(2) zone; porch left and right exposed; Lumber DOL=1.60 plate grip DOL=1.60. This truss is designed for C-C for members and forces, and for MWFRS for reactions specified.
2) Refer to girder(s) for truss to truss connections.
3) Provide mechanical connection (by others) of truss to bearing plate capable of withstanding 96 lb uplift at joint 3, 265 lb uplift at joint 2 and 48 lb uplift at joint 4.

LOAD CASE(S) Standard

SEPTEMBER 30, 2005 TRUSS DESIGN ENGINEER:
THOMAS E. MILLER PE 56877, BYRON K. ANDERSON PE 60987
STRUCTURAL ENGINEERING AND INSPECTIONS, INC. EB 9196
16105 N. FLORIDA AVE. STE B, LUTZ, FL 33549

Job	Truss	Truss Type	Qty	Ply	WOODMAN PARK LOT 34 TURKEY RUN	Dwg.#093005023
L134662	EJ7	MONO TRUSS	24	1	Job Reference (optional)	

Builders FirstSource, Lake City, Fl 32055 — 6.200 s Jul 13 2005 MiTek Industries, Inc. Thu Sep 29 10:18:00 2005 Page 1

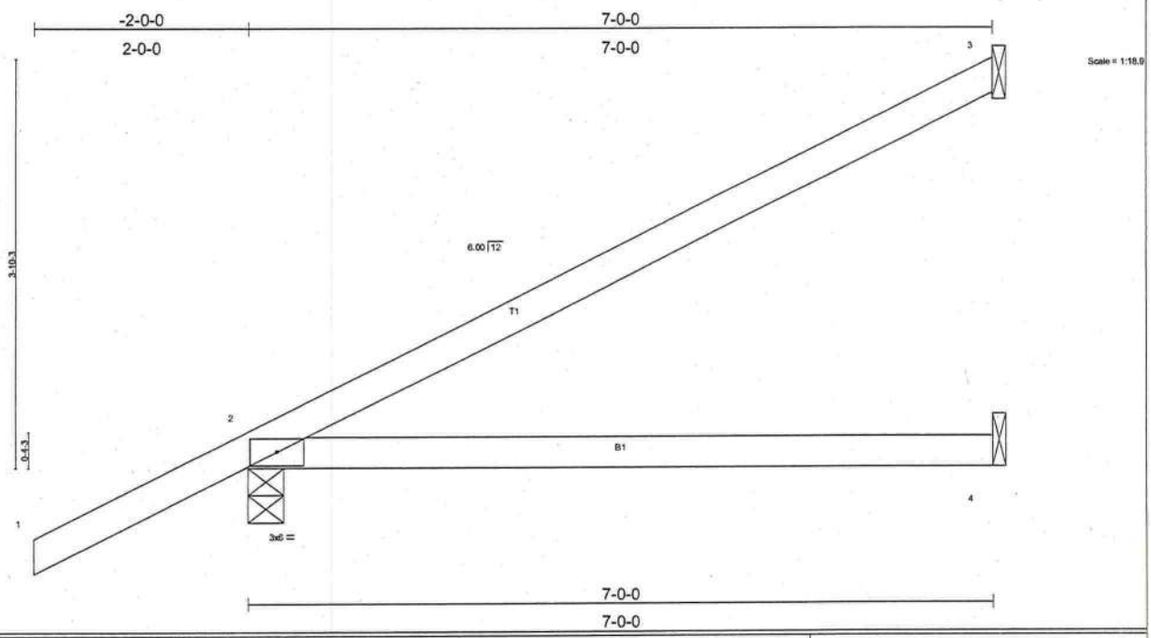

LOADING (psf)		SPACING	2-0-0	CSI		DEFL	in	(loc)	l/defl	L/d	PLATES	GRIP
TCLL	20.0	Plates Increase	1.25	TC	0.54	Vert(LL)	-0.10	2-4	>783	240	MT20	244/190
TCDL	7.0	Lumber Increase	1.25	BC	0.28	Vert(TL)	-0.16	2-4	>522	180		
BCLL	10.0	Rep Stress Incr	YES	WB	0.00	Horz(TL)	-0.00	3	n/a	n/a		
BCDL	5.0	Code FBC2001/ANSI95		(Matrix)							Weight: 26 lb	

LUMBER
TOP CHORD 2 X 4 SYP No.2D
BOT CHORD 2 X 4 SYP No.2D

BRACING
TOP CHORD Sheathed or 6-0-0 oc purlins.
BOT CHORD Rigid ceiling directly applied or 10-0-0 oc bracing.

REACTIONS (lb/size) 3=164/Mechanical, 2=420/0-4-0, 4=102/Mechanical
Max Horz 2=224(load case 5)
Max Uplift3=-146(load case 5), 2=-211(load case 5)

FORCES (lb) - Maximum Compression/Maximum Tension
TOP CHORD 1-2=0/47, 2-3=-154/59
BOT CHORD 2-4=0/0

NOTES
1) Wind: ASCE 7-98; 110mph (3-second gust); h=20ft; TCDL=4.2psf; BCDL=3.0psf; Category II; Exp B; enclosed; MWFRS gable end zone and C-C Exterior(2) zone; Lumber DOL=1.60 plate grip DOL=1.60. This truss is designed for C-C for members and forces, and for MWFRS for reactions specified.
2) Refer to girder(s) for truss to truss connections.
3) Provide mechanical connection (by others) of truss to bearing plate capable of withstanding 146 lb uplift at joint 3 and 211 lb uplift at joint 2.

LOAD CASE(S) Standard

SEPTEMBER 30, 2005 TRUSS DESIGN ENGINEER:
THOMAS E. MILLER PE 56877, BYRON K. ANDERSON PE 60987
STRUCTURAL ENGINEERING AND INSPECTIONS, INC. EB 9196
16105 N. FLORIDA AVE. STE B, LUTZ, FL 33549

Job	Truss	Truss Type	Qty	Ply	WOODMAN PARK LOT 34 TURKEY RUN
L134662	HJ7	MONO TRUSS	2	1	Job Reference (optional)

Dwg.#093005024

Builders FirstSource, Lake City, Fl 32055 — 6.200 s Jul 13 2005 MiTek Industries, Inc. Thu Sep 29 10:18:00 2005 Page 1

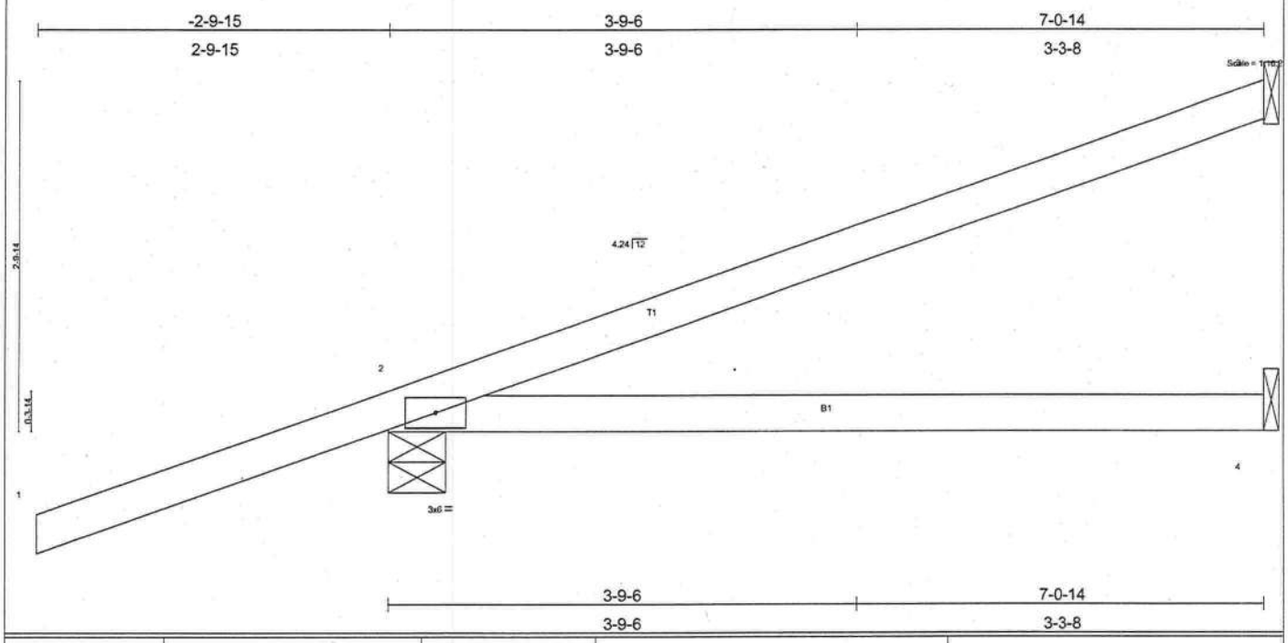

LOADING (psf)		SPACING	2-0-0	CSI		DEFL	in	(loc)	l/defl	L/d	PLATES	GRIP
TCLL	20.0	Plates Increase	1.25	TC	0.48	Vert(LL)	0.13	2-4	>623	240	MT20	244/190
TCDL	7.0	Lumber Increase	1.25	BC	0.29	Vert(TL)	-0.14	2-4	>589	180		
BCLL	10.0	Rep Stress Incr	NO	WB	0.00	Horz(TL)	-0.00	3	n/a	n/a		
BCDL	5.0	Code FBC2001/ANSI95		(Matrix)							Weight: 26 lb	

LUMBER
TOP CHORD 2 X 4 SYP No.2D
BOT CHORD 2 X 4 SYP No.2D

BRACING
TOP CHORD Sheathed or 7-0-14 oc purlins.
BOT CHORD Rigid ceiling directly applied or 10-0-0 oc bracing.

REACTIONS (lb/size) 3=182/Mechanical, 2=378/0-5-11, 4=120/Mechanical
Max Horz 2=167(load case 2)
Max Uplift3=-140(load case 2), 2=-336(load case 2), 4=-61(load case 2)

FORCES (lb) - Maximum Compression/Maximum Tension
TOP CHORD 1-2=0/50, 2-3=-66/42
BOT CHORD 2-4=0/0

NOTES
1) Wind: ASCE 7-98; 110mph (3-second gust); h=20ft; TCDL=4.2psf; BCDL=3.0psf; Category II; Exp B; enclosed; MWFRS gable end zone; porch left and right exposed; Lumber DOL=1.60 plate grip DOL=1.60.
2) Refer to girder(s) for truss to truss connections.
3) Provide mechanical connection (by others) of truss to bearing plate capable of withstanding 140 lb uplift at joint 3, 336 lb uplift at joint 2 and 61 lb uplift at joint 4.
4) In the LOAD CASE(S) section, loads applied to the face of the truss are noted as front (F) or back (B).

LOAD CASE(S) Standard
1) Regular: Lumber Increase=1.25, Plate Increase=1.25
Uniform Loads (plf)
Vert: 1-2=-54
Trapezoidal Loads (plf)
Vert: 2=-3(F=25, B=25)-to-3=-95(F=-21, B=-21), 2=0(F=15, B=15)-to-4=-53(F=-12, B=-12)

SEPTEMBER 30, 2005 TRUSS DESIGN ENGINEER:
THOMAS E. MILLER PE 56877, BYRON K. ANDERSON PE 60987
STRUCTURAL ENGINEERING AND INSPECTIONS, INC. EB 9196
16105 N. FLORIDA AVE. STE B, LUTZ, FL 33549

Job	Truss	Truss Type	Qty	Ply	WOODMAN PARK LOT 34 TURKEY RUN
L134662	HJ7A	SPECIAL	2	1	Job Reference (optional)

Dwg.#093005025

Builders FirstSource, Lake City, Fl 32055

6.200 s Jul 13 2005 MiTek Industries, Inc. Thu Sep 29 10:18:01 2005 Page 1

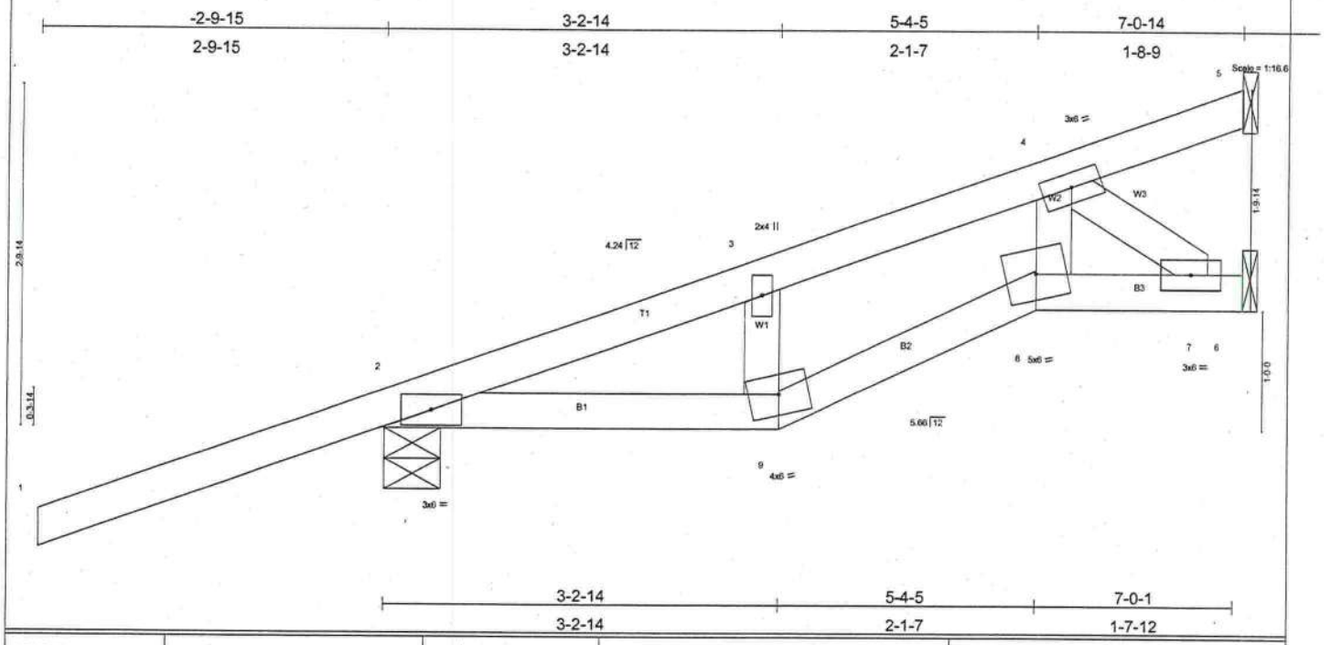

LOADING (psf)		SPACING	2-0-0	CSI		DEFL	in	(loc)	l/defl	L/d	PLATES	GRIP
TCLL	20.0	Plates Increase	1.25	TC	0.48	Vert(LL)	0.02	8	>999	240	MT20	244/190
TCDL	7.0	Lumber Increase	1.25	BC	0.11	Vert(TL)	-0.03	8	>999	180		
BCLL	10.0	Rep Stress Incr	NO	WB	0.07	Horz(TL)	-0.02	6	n/a	n/a		
BCDL	5.0	Code	FBC2001/ANSI95	(Matrix)							Weight: 31 lb	

LUMBER
TOP CHORD 2 X 4 SYP No.2D
BOT CHORD 2 X 4 SYP No.2D
WEBS 2 X 4 SYP No.3

BRACING
TOP CHORD Sheathed or 6-0-0 oc purlins.
BOT CHORD Rigid ceiling directly applied or 10-0-0 oc bracing.

REACTIONS (lb/size) 5=122/Mechanical, 2=378/0-5-11, 6=179/Mechanical
Max Horz 2=178(load case 4)
Max Uplift5=-106(load case 2), 2=-302(load case 4), 6=-23(load case 3)

FORCES (lb) - Maximum Compression/Maximum Tension
TOP CHORD 1-2=0/50, 2-3=-311/0, 3-4=-299/9, 4-5=-42/36
BOT CHORD 2-9=-54/255, 8-9=-57/285, 7-8=-48/215, 6-7=0/0
WEBS 3-9=-62/36, 4-8=-14/216, 4-7=-269/60

NOTES
1) Wind: ASCE 7-98; 110mph (3-second gust); h=20ft; TCDL=4.2psf; BCDL=3.0psf; Category II; Exp B; enclosed; MWFRS gable end zone; Lumber DOL=1.60 plate grip DOL=1.60.
2) Refer to girder(s) for truss to truss connections.
3) Provide mechanical connection (by others) of truss to bearing plate capable of withstanding 106 lb uplift at joint 5, 302 lb uplift at joint 2 and 23 lb uplift at joint 6.
4) In the LOAD CASE(S) section, loads applied to the face of the truss are noted as front (F) or back (B).

LOAD CASE(S) Standard
1) Regular: Lumber Increase=1.25, Plate Increase=1.25
Uniform Loads (plf)
Vert: 1-2=-54
Trapezoidal Loads (plf)
Vert: 2=-3(F=25, B=25)-to-5=-95(F=-21, B=-21), 2=0(F=15, B=15)-to-9=-23(F=3, B=3), 9=-23(F=3, B=3)-to-8=-40(F=-5, B=-5), 8=-40(F=-5, B=-5)-to-6=-53(F=-12, B=-12)

SEPTEMBER 30, 2005 TRUSS DESIGN ENGINEER:
THOMAS E. MILLER PE 56877, BYRON K. ANDERSON PE 60987
STRUCTURAL ENGINEERING AND INSPECTIONS, INC. EB 9196
16105 N. FLORIDA AVE. STE B, LUTZ, FL 33549

Job	Truss	Truss Type	Qty	Ply	WOODMAN PARK LOT 34 TURKEY RUN
L134662	HJ7B	MONO TRUSS	1	1	Job Reference (optional)

Dwg.#093005026

Builders FirstSource, Lake City, Fl 32055 — 6.200 s Jul 13 2005 MiTek Industries, Inc. Thu Sep 29 10:18:01 2005 Page 1

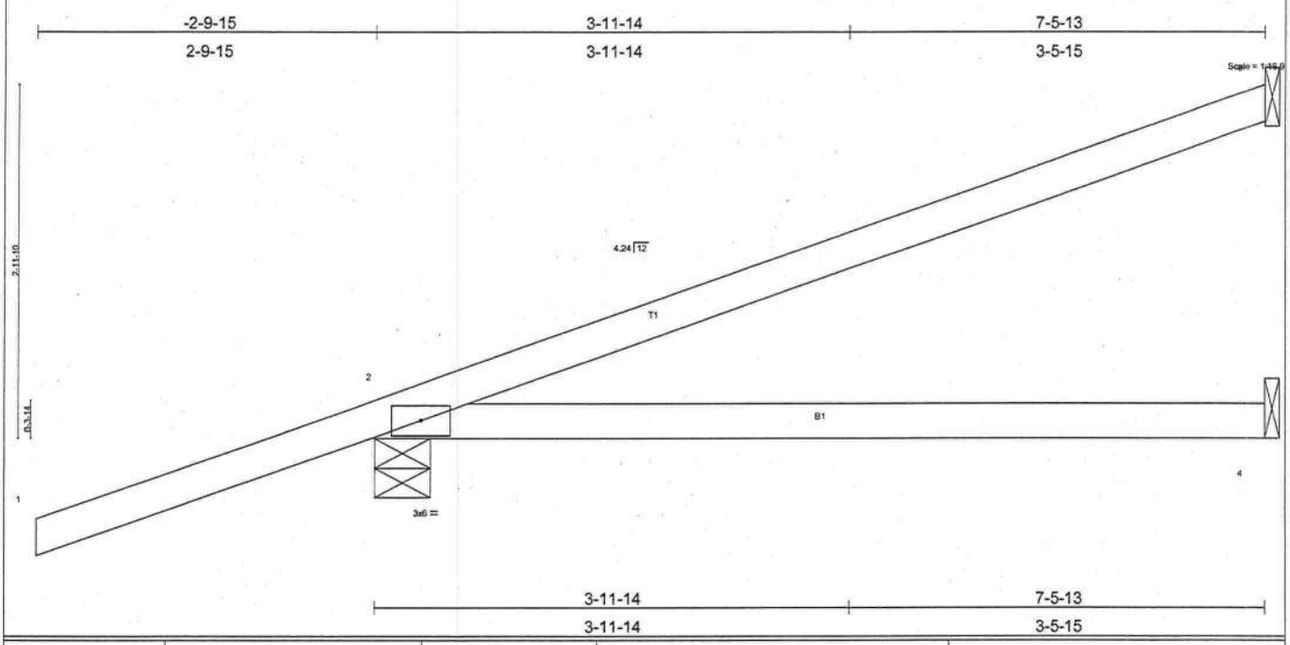

LOADING (psf)		SPACING	2-0-0	CSI		DEFL	in	(loc)	l/defl	L/d	PLATES	GRIP
TCLL	20.0	Plates Increase	1.25	TC	0.48	Vert(LL)	0.17	2-4	>522	240	MT20	244/190
TCDL	7.0	Lumber Increase	1.25	BC	0.34	Vert(TL)	-0.19	2-4	>466	180		
BCLL	10.0	Rep Stress Incr	NO	WB	0.00	Horz(TL)	-0.00	3	n/a	n/a		
BCDL	5.0	Code FBC2001/ANSI95		(Matrix)							Weight: 28 lb	

LUMBER
TOP CHORD 2 X 4 SYP No.2D
BOT CHORD 2 X 4 SYP No.2D

BRACING
TOP CHORD Sheathed or 7-5-13 oc purlins.
BOT CHORD Rigid ceiling directly applied or 10-0-0 oc bracing.

REACTIONS (lb/size) 3=211/Mechanical, 2=397/0-5-11, 4=134/Mechanical
Max Horz 2=185(load case 4)
Max Uplift3=-165(load case 2), 2=-395(load case 4), 4=-69(load case 4)

FORCES (lb) - Maximum Compression/Maximum Tension
TOP CHORD 1-2=0/50, 2-3=-77/49
BOT CHORD 2-4=0/0

NOTES
1) Wind: ASCE 7-98; 110mph (3-second gust); h=20ft; TCDL=4.2psf; BCDL=3.0psf; Category II; Exp B; enclosed; MWFRS gable end zone; porch left and right exposed; Lumber DOL=1.60 plate grip DOL=1.60.
2) Refer to girder(s) for truss to truss connections.
3) Provide mechanical connection (by others) of truss to bearing plate capable of withstanding 165 lb uplift at joint 3, 395 lb uplift at joint 2 and 69 lb uplift at joint 4.
4) In the LOAD CASE(S) section, loads applied to the face of the truss are noted as front (F) or back (B).

LOAD CASE(S) Standard
1) Regular: Lumber Increase=1.25, Plate Increase=1.25
Uniform Loads (plf)
Vert: 1-2=-54
Trapezoidal Loads (plf)
Vert: 2=-3(F=25, B=25)-to-3=-101(F=-24, B=-24), 2=0(F=15, B=15)-to-4=-56(F=-13, B=-13)

SEPTEMBER 30, 2005 TRUSS DESIGN ENGINEER:
THOMAS E. MILLER PE 56877, BYRON K. ANDERSON PE 60987
STRUCTURAL ENGINEERING AND INSPECTIONS, INC. EB 9196
16105 N. FLORIDA AVE. STE B, LUTZ, FL 33549

Job	Truss	Truss Type	Qty	Ply	WOODMAN PARK LOT 34 TURKEY RUN
L134662	HJ9	MONO TRUSS	4	1	Job Reference (optional)

Dwg.#093005027

Builders FirstSource, Lake City, Fl 32055

6.200 s Jul 13 2005 MiTek Industries, Inc. Thu Sep 29 10:18:02 2005 Page 1

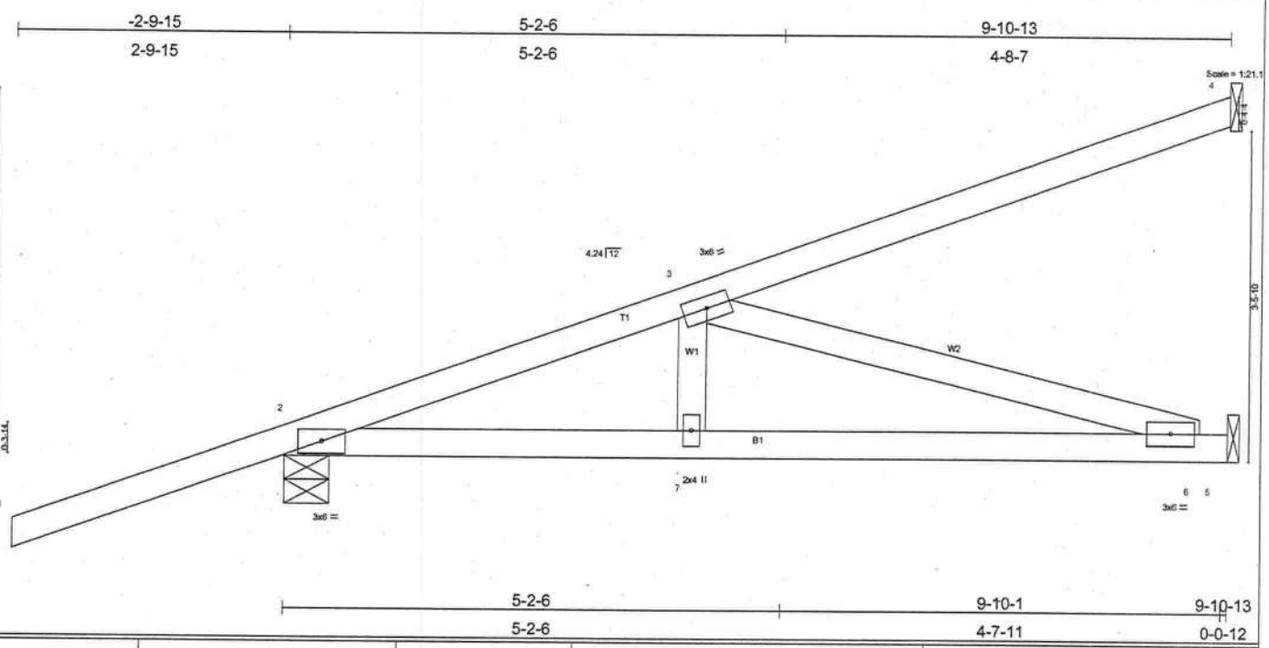

LOADING (psf)		SPACING	2-0-0	CSI		DEFL	in	(loc)	l/defl	L/d	PLATES	GRIP
TCLL	20.0	Plates Increase	1.25	TC	0.54	Vert(LL)	-0.09	6-7	>999	240	MT20	244/190
TCDL	7.0	Lumber Increase	1.25	BC	0.51	Vert(TL)	-0.14	6-7	>840	180		
BCLL	10.0	Rep Stress Incr	NO	WB	0.49	Horz(TL)	0.01	5	n/a	n/a		
BCDL	5.0	Code FBC2001/ANSI95		(Matrix)							Weight: 45 lb	

LUMBER
TOP CHORD 2 X 4 SYP No.2D
BOT CHORD 2 X 4 SYP No.2D
WEBS 2 X 4 SYP No.3

BRACING
TOP CHORD Sheathed or 6-0-0 oc purlins.
BOT CHORD Rigid ceiling directly applied or 10-0-0 oc bracing.

REACTIONS (lb/size) 4=269/Mechanical, 2=535/0-5-11, 5=375/Mechanical
Max Horz 2=269(load case 2)
Max Uplift4=-231(load case 2), 2=-281(load case 2), 5=-62(load case 2)

FORCES (lb) - Maximum Compression/Maximum Tension
TOP CHORD 1-2=0/50, 2-3=-881/117, 3-4=-105/66
BOT CHORD 2-7=-306/816, 6-7=-306/816, 5-6=0/0
WEBS 3-7=0/178, 3-6=-848/318

NOTES
1) Wind: ASCE 7-98; 110mph (3-second gust); h=20ft; TCDL=4.2psf; BCDL=3.0psf; Category II; Exp B; enclosed; MWFRS gable end zone; Lumber DOL=1.60 plate grip DOL=1.60.
2) Refer to girder(s) for truss to truss connections.
3) Provide mechanical connection (by others) of truss to bearing plate capable of withstanding 231 lb uplift at joint 4, 281 lb uplift at joint 2 and 62 lb uplift at joint 5.
4) In the LOAD CASE(S) section, loads applied to the face of the truss are noted as front (F) or back (B).

LOAD CASE(S) Standard
1) Regular: Lumber Increase=1.25, Plate Increase=1.25
Uniform Loads (plf)
Vert: 1-2=-54
Trapezoidal Loads (plf)
Vert: 2=-3(F=25, B=25)-to-4=-134(F=-40, B=-40), 2=0(F=15, B=15)-to-5=-74(F=-22, B=-22)

SEPTEMBER 30, 2005 TRUSS DESIGN ENGINEER:
THOMAS E. MILLER PE 56877, BYRON K. ANDERSON PE 60987
STRUCTURAL ENGINEERING AND INSPECTIONS, INC. EB 9196
16105 N. FLORIDA AVE. STE B, LUTZ, FL 33549

Job	Truss	Truss Type	Qty	Ply	WOODMAN PARK LOT 34 TURKEY RUN
L134662	T01	HIP	1	2	Job Reference (optional)

Dwg.#093005028

Builders FirstSource, Lake City, Fl 32055

6.200 s Jul 13 2005 MiTek Industries, Inc. Thu Sep 29 10:18:03 2005 Page 1

-2-0-0	3-11-4	7-0-0	12-4-9	17-7-7	23-0-0	26-0-12	30-0-0	32-0-0
2-0-0	3-11-4	3-0-12	5-4-9	5-2-13	5-4-9	3-0-12	3-11-4	2-0-0

Scale = 1:56.4

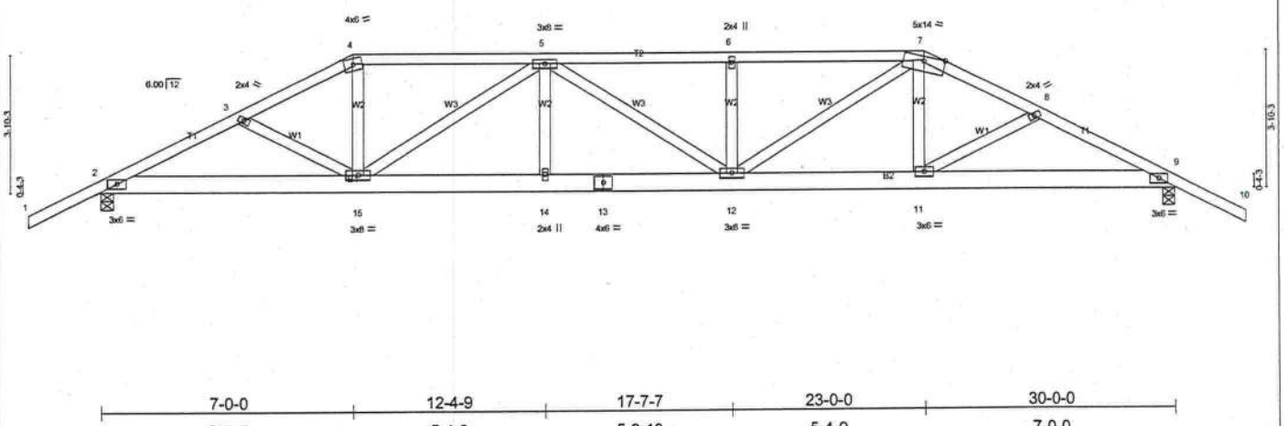

7-0-0	12-4-9	17-7-7	23-0-0	30-0-0
7-0-0	5-4-9	5-2-13	5-4-9	7-0-0

LOADING (psf)		SPACING	2-0-0	CSI		DEFL	in	(loc)	l/defl	L/d	PLATES	GRIP
TCLL	20.0	Plates Increase	1.25	TC	0.30	Vert(LL)	-0.19	12-14	>999	240	MT20	244/190
TCDL	7.0	Lumber Increase	1.25	BC	0.38	Vert(TL)	-0.26	12-14	>999	180		
BCLL	10.0	Rep Stress Incr	NO	WB	0.29	Horz(TL)	0.06	9	n/a	n/a		
BCDL	5.0	Code	FBC2001/ANSI95	(Matrix)							Weight: 358 lb	

LUMBER
TOP CHORD 2 X 4 SYP No.2D
BOT CHORD 2 X 6 SYP No.1D
WEBS 2 X 4 SYP No.3

BRACING
TOP CHORD Sheathed or 5-6-2 oc purlins.
BOT CHORD Rigid ceiling directly applied or 10-0-0 oc bracing.

REACTIONS (lb/size) 2=2681/0-4-0, 9=2681/0-4-0
Max Horz 2=116(load case 4)
Max Uplift2=-1100(load case 4), 9=-1100(load case 5)

FORCES (lb) - Maximum Compression/Maximum Tension
TOP CHORD 1-2=0/51, 2-3=-5158/2132, 3-4=-5058/2156, 4-5=-4595/1996, 5-6=-6036/2639, 6-7=-6037/2639, 7-8=-5072/2164, 8-9=-5168/2138, 9-10=0/51
BOT CHORD 2-15=-1872/4535, 14-15=-2574/6065, 13-14=-2574/6065, 12-13=-2574/6065, 11-12=-1865/4568, 9-11=-1837/4543
WEBS 3-15=-95/126, 4-15=-638/1790, 5-15=-1814/852, 5-14=0/366, 5-12=-85/46, 6-12=-617/510, 7-12=-839/1798, 7-11=-239/839, 8-11=-99/131

NOTES
1) Hanger(s) or other connection device(s) shall be provided sufficient to support concentrated load(s) 539 lb down and 277 lb up at 23-0-0, and 539 lb down and 277 lb up at 7-0-0 on bottom chord. The design/selection of such connection device(s) is the responsibility of others.
2) 2-ply truss to be connected together with 0.131"x3" Nails as follows:
Top chords connected as follows: 2 X 4 - 1 row at 0-9-0 oc.
Bottom chords connected as follows: 2 X 6 - 2 rows at 0-9-0 oc.
Webs connected as follows: 2 X 4 - 1 row at 0-9-0 oc.
Hanger(s) or other connection device(s) shall be provided sufficient to support concentrated load(s) 539 lb down and 277 lb up at 23-0-0, and 539 lb down and 277 lb up at 7-0-0 on bottom chord. The design/selection of such connection device(s) is the responsibility of others.
3) All loads are considered equally applied to all plies, except if noted as front (F) or back (B) face in the LOAD CASE(S) section. Ply to ply connections have been provided to distribute only loads noted as (F) or (B), unless otherwise indicated.
4) Unbalanced roof live loads have been considered for this design.
5) Wind: ASCE 7-98; 110mph (3-second gust); h=20ft; TCDL=4.2psf; BCDL=3.0psf; Category II; Exp B; enclosed; MWFRS gable end zone; Lumber DOL=1.60 plate grip DOL=1.60.
6) Provide adequate drainage to prevent water ponding.
7) Provide mechanical connection (by others) of truss to bearing plate capable of withstanding 1100 lb uplift at joint 2 and 1100 lb uplift at joint 9.
8) Girder carries hip end with 7-0-0 end setback.
9) Hanger(s) or other connection device(s) shall be provided sufficient to support concentrated load(s) 539 lb down and 277 lb up at 23-0-0, and 539 lb down and 277 lb up at 7-0-0 on bottom chord. The design/selection of such connection device(s) is the responsibility of others.

LOAD CASE(S) Standard
1) Regular: Lumber Increase=1.25, Plate Increase=1.25
Uniform Loads (plf)
Vert: 1-4=-54, 4-7=-117(F=-63), 7-10=-54, 2-15=-30, 11-15=-65(F=-35), 9-11=-30
Concentrated Loads (lb)
Vert: 15=-539(F) 11=-539(F)

SEPTEMBER 30, 2005 TRUSS DESIGN ENGINEER:
THOMAS E. MILLER PE 56877, BYRON K. ANDERSON PE 60987
STRUCTURAL ENGINEERING AND INSPECTIONS, INC. EB 9196
16105 N. FLORIDA AVE. STE B, LUTZ, FL 33549

Job	Truss	Truss Type	Qty	Ply	WOODMAN PARK LOT 34 TURKEY RUN
L134662	T02	HIP	1	1	Job Reference (optional)

Dwg.#093005029

Builders FirstSource, Lake City, Fl 32055

6.200 s Jul 13 2005 MiTek Industries, Inc. Thu Sep 29 10:18:03 2005 Page 1

-2-0-0	4-6-10	9-0-0	15-0-0	21-0-0	25-5-6	30-0-0	32-0-0
2-0-0	4-6-10	4-5-6	6-0-0	6-0-0	4-5-6	4-6-10	2-0-0

Scale = 1:56.4

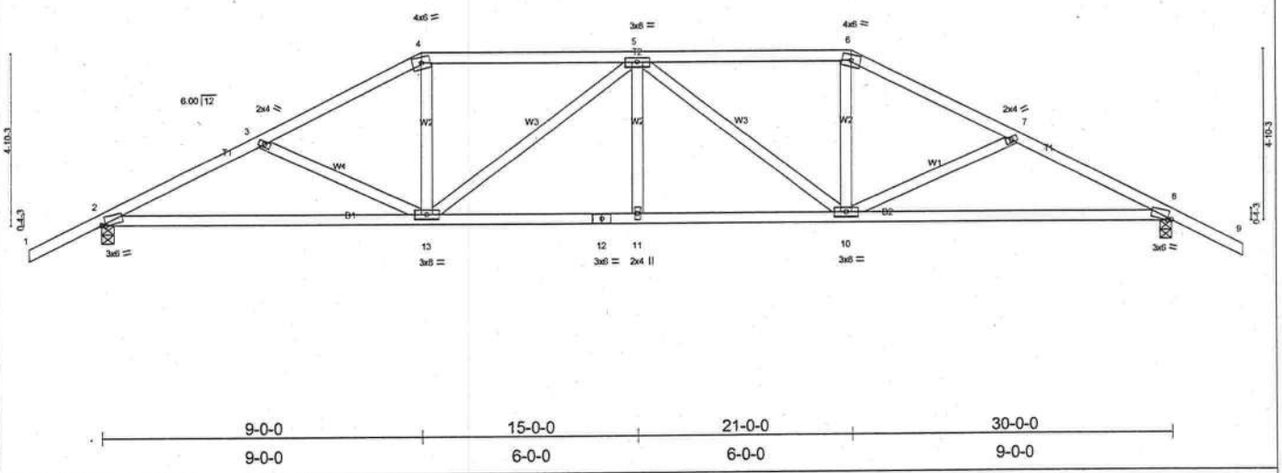

9-0-0	15-0-0	21-0-0	30-0-0
9-0-0	6-0-0	6-0-0	9-0-0

Plate Offsets (X,Y): [2:0-1-5,0-0-7], [8:0-1-5,0-0-7]

LOADING (psf)		SPACING	2-0-0	CSI		DEFL	in	(loc)	l/defl	L/d	PLATES	GRIP
TCLL	20.0	Plates Increase	1.25	TC	0.39	Vert(LL)	-0.18	8-10	>999	240	MT20	244/190
TCDL	7.0	Lumber Increase	1.25	BC	0.63	Vert(TL)	-0.27	8-10	>999	180		
BCLL	10.0	Rep Stress Incr	YES	WB	0.44	Horz(TL)	0.08	8	n/a	n/a		
BCDL	5.0	Code	FBC2001/ANSI95	(Matrix)							Weight: 154 lb	

LUMBER
TOP CHORD 2 X 4 SYP No.2D
BOT CHORD 2 X 4 SYP No.2D
WEBS 2 X 4 SYP No.3

BRACING
TOP CHORD Sheathed or 4-2-7 oc purlins.
BOT CHORD Rigid ceiling directly applied or 7-6-2 oc bracing.

REACTIONS (lb/size) 2=1363/0-4-0, 8=1363/0-4-0
Max Horz 2=134(load case 5)
Max Uplift2=-444(load case 5), 8=-444(load case 6)

FORCES (lb) - Maximum Compression/Maximum Tension
TOP CHORD 1-2=0/47, 2-3=-2219/1023, 3-4=-1987/889, 4-5=-1750/865, 5-6=-1750/865, 6-7=-1987/889, 7-8=-2219/1023, 8-9=0/47
BOT CHORD 2-13=-740/1933, 12-13=-653/2043, 11-12=-653/2043, 10-11=-653/2043, 8-10=-740/1933
WEBS 3-13=-228/247, 4-13=-147/571, 5-13=-464/220, 5-11=0/129, 5-10=-464/220, 6-10=-147/571, 7-10=-228/247

NOTES
1) Unbalanced roof live loads have been considered for this design.
2) Wind: ASCE 7-98; 110mph (3-second gust); h=20ft; TCDL=4.2psf; BCDL=3.0psf; Category II; Exp B; enclosed; MWFRS gable end zone and C-C Exterior(2) zone; Lumber DOL=1.60 plate grip DOL=1.60. This truss is designed for C-C for members and forces, and for MWFRS for reactions specified.
3) Provide adequate drainage to prevent water ponding.
4) Provide mechanical connection (by others) of truss to bearing plate capable of withstanding 444 lb uplift at joint 2 and 444 lb uplift at joint 8.

LOAD CASE(S) Standard

SEPTEMBER 30, 2005 TRUSS DESIGN ENGINEER:
THOMAS E. MILLER PE 56877, BYRON K. ANDERSON PE 60987
STRUCTURAL ENGINEERING AND INSPECTIONS, INC. EB 9196
16105 N. FLORIDA AVE. STE B, LUTZ, FL 33549

Job	Truss	Truss Type	Qty	Ply	WOODMAN PARK LOT 34 TURKEY RUN
L134662	T03	HIP	1	1	Job Reference (optional)

Dwg.#093005030

Builders FirstSource, Lake City, Fl 32055

6.200 s Jul 13 2005 MiTek Industries, Inc. Thu Sep 29 10:18:04 2005 Page 1

-2-0-0	5-8-8	11-0-0	19-0-0	24-3-8	30-0-0	32-0-0
2-0-0	5-8-8	5-3-8	8-0-0	5-3-8	5-8-8	2-0-0

Scale = 1:56.4

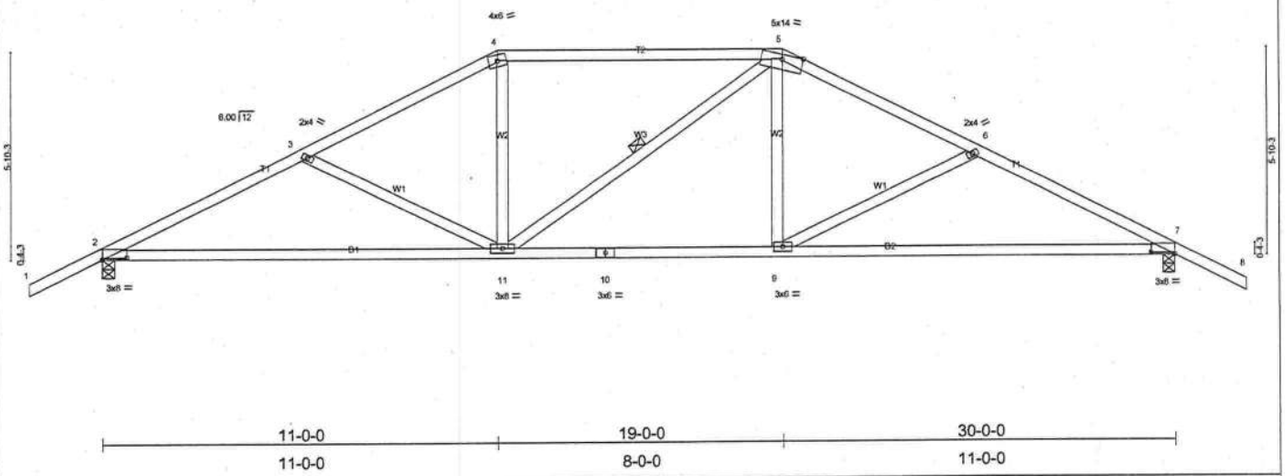

11-0-0	19-0-0	30-0-0
11-0-0	8-0-0	11-0-0

Plate Offsets (X,Y): [2:0-8-0,0-0-10], [7:0-8-0,0-0-10]

LOADING (psf)		SPACING	2-0-0	CSI		DEFL	in	(loc)	l/defl	L/d	PLATES	GRIP
TCLL	20.0	Plates Increase	1.25	TC	0.44	Vert(LL)	-0.36	7-9	>999	240	MT20	244/190
TCDL	7.0	Lumber Increase	1.25	BC	0.66	Vert(TL)	-0.53	7-9	>678	180		
BCLL	10.0	Rep Stress Incr	YES	WB	0.21	Horz(TL)	0.07	7	n/a	n/a		
BCDL	5.0	Code	FBC2001/ANSI95	(Matrix)							Weight: 147 lb	

LUMBER
TOP CHORD 2 X 4 SYP No.2D
BOT CHORD 2 X 4 SYP No.2D
WEBS 2 X 4 SYP No.3

BRACING
TOP CHORD Sheathed or 4-0-6 oc purlins.
BOT CHORD Rigid ceiling directly applied or 7-5-4 oc bracing.
WEBS 1 Row at midpt 5-11

REACTIONS (lb/size) 2=1363/0-4-0, 7=1363/0-4-0
Max Horz 2=154(load case 5)
Max Uplift2=-467(load case 5), 7=-467(load case 6)

FORCES (lb) - Maximum Compression/Maximum Tension
TOP CHORD 1-2=0/47, 2-3=-2149/1059, 3-4=-1847/885, 4-5=-1610/870, 5-6=-1846/885, 6-7=-2149/1059, 7-8=0/47
BOT CHORD 2-11=-760/1874, 10-11=-469/1609, 9-10=-469/1609, 7-9=-760/1874
WEBS 3-11=-308/329, 4-11=-89/421, 5-11=-143/144, 5-9=-89/421, 6-9=-308/328

NOTES
1) Unbalanced roof live loads have been considered for this design.
2) Wind: ASCE 7-98; 110mph (3-second gust); h=20ft; TCDL=4.2psf; BCDL=3.0psf; Category II; Exp B; enclosed; MWFRS gable end zone and C-C Exterior(2) zone; Lumber DOL=1.60 plate grip DOL=1.60. This truss is designed for C-C for members and forces, and for MWFRS for reactions specified.
3) Provide adequate drainage to prevent water ponding.
4) Provide mechanical connection (by others) of truss to bearing plate capable of withstanding 467 lb uplift at joint 2 and 467 lb uplift at joint 7.

LOAD CASE(S) Standard

SEPTEMBER 30, 2005 TRUSS DESIGN ENGINEER:
THOMAS E. MILLER PE 56877, BYRON K. ANDERSON PE 60987
STRUCTURAL ENGINEERING AND INSPECTIONS, INC. EB 9196
16105 N. FLORIDA AVE. STE B, LUTZ, FL 33549

Job	Truss	Truss Type	Qty	Ply	WOODMAN PARK LOT 34 TURKEY RUN
L134662	T04	SPECIAL	1	1	Job Reference (optional)

Dwg.#09300503I

Builders FirstSource, Lake City, Fl 32055 — 6.200 s Jul 13 2005 MiTek Industries, Inc. Thu Sep 29 10:18:04 2005 Page 1

6-9-6	13-0-0	17-0-0	23-2-12	30-0-0
6-9-6	6-2-10	4-0-0	6-2-12	6-9-4

Scale = 1:51.6

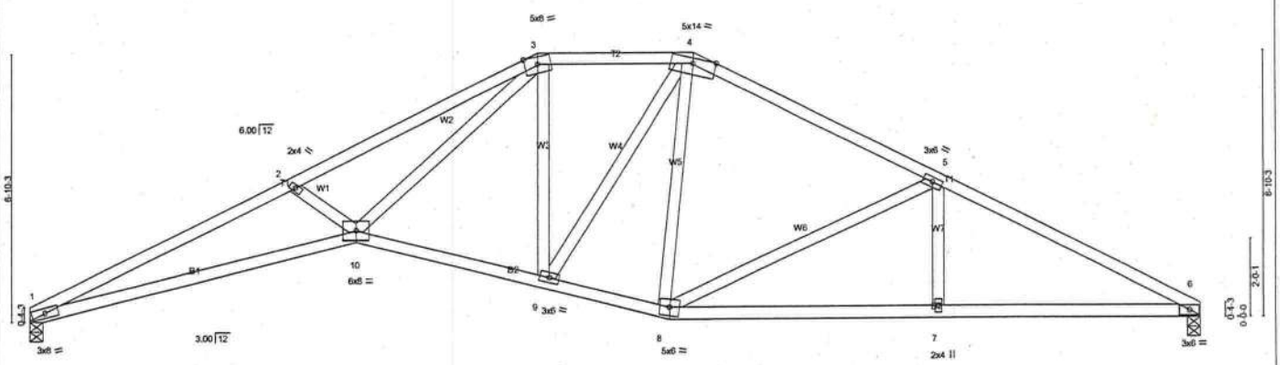

8-4-4	13-0-0	16-4-8	23-2-12	30-0-0
8-4-4	4-7-12	3-4-8	6-10-4	6-9-4

LOADING (psf)		SPACING	2-0-0	CSI		DEFL	in	(loc)	l/defl	L/d	PLATES	GRIP
TCLL	20.0	Plates Increase	1.25	TC	0.69	Vert(LL)	-0.38	1-10	>947	240	MT20	244/190
TCDL	7.0	Lumber Increase	1.25	BC	0.88	Vert(TL)	-0.53	1-10	>669	180		
BCLL	10.0	Rep Stress Incr	YES	WB	0.85	Horz(TL)	0.25	6	n/a	n/a		
BCDL	5.0	Code FBC2001/ANSI95		(Matrix)							Weight: 150 lb	

LUMBER
TOP CHORD 2 X 4 SYP No.2D
BOT CHORD 2 X 4 SYP No.2D
WEBS 2 X 4 SYP No.3

BRACING
TOP CHORD Sheathed or 2-7-4 oc purlins.
BOT CHORD Rigid ceiling directly applied or 4-9-1 oc bracing.

REACTIONS (lb/size) 1=1246/0-4-0, 6=1246/0-4-0
Max Horz 1=132(load case 5)
Max Uplift1=-361(load case 5), 6=-361(load case 6)

FORCES (lb) - Maximum Compression/Maximum Tension
TOP CHORD 1-2=-4107/2037, 2-3=-3840/1895, 3-4=-1611/966, 4-5=-1626/890, 5-6=-2293/1139
BOT CHORD 1-10=-1763/3733, 9-10=-607/1689, 8-9=-510/1443, 7-8=-908/1973, 6-7=-908/1973
WEBS 2-10=-301/400, 3-10=-1119/2436, 3-9=-369/192, 4-9=-188/458, 5-8=-662/469, 5-7=0/232, 4-8=-75/166

NOTES
1) Unbalanced roof live loads have been considered for this design.
2) Wind: ASCE 7-98; 110mph (3-second gust); h=20ft; TCDL=4.2psf; BCDL=3.0psf; Category II; Exp B; enclosed; MWFRS gable end zone and C-C Exterior(2) zone; Lumber DOL=1.60 plate grip DOL=1.60. This truss is designed for C-C for members and forces, and for MWFRS for reactions specified.
3) Provide adequate drainage to prevent water ponding.
4) Bearing at joint(s) 1 considers parallel to grain value using ANSI/TPI 1 angle to grain formula. Building designer should verify capacity of bearing surface.
5) Provide mechanical connection (by others) of truss to bearing plate capable of withstanding 361 lb uplift at joint 1 and 361 lb uplift at joint 6.

LOAD CASE(S) Standard

SEPTEMBER 30, 2005 TRUSS DESIGN ENGINEER:
THOMAS E. MILLER PE 56877, BYRON K. ANDERSON PE 60987
STRUCTURAL ENGINEERING AND INSPECTIONS, INC. EB 9196
16105 N. FLORIDA AVE. STE B, LUTZ, FL 33549

Job	Truss	Truss Type	Qty	Ply	WOODMAN PARK LOT 34 TURKEY RUN	Dwg.#09300503 2
L134662	T05	HIP	1	1	Job Reference (optional)	

Builders FirstSource, Lake City, Fl 32055 — 6.200 s Jul 13 2005 MiTek Industries, Inc. Thu Sep 29 10:18:05 2005 Page 1

-2-0-0	3-11-4	7-0-0	11-3-8	15-7-0	18-7-12	22-7-0	24-7-0
2-0-0	3-11-4	3-0-12	4-3-8	4-3-8	3-0-12	3-11-4	2-0-0

Scale = 1:44.1

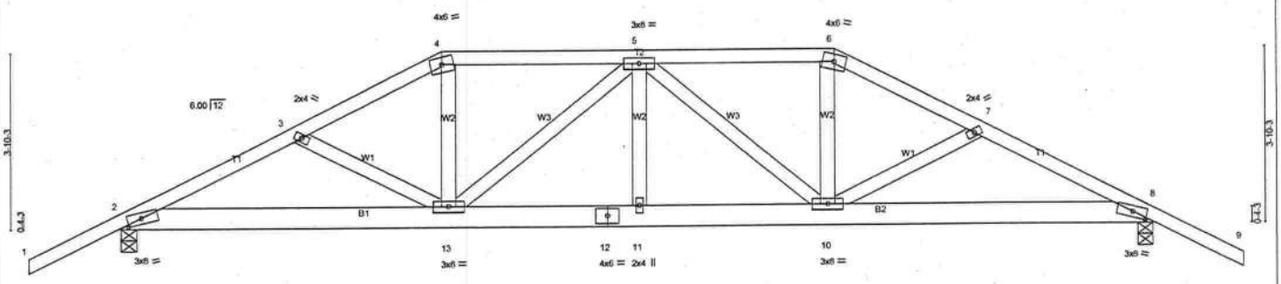

7-0-0	11-3-8	15-7-0	22-7-0
7-0-0	4-3-8	4-3-8	7-0-0

Plate Offsets (X,Y): [2:0-3-12,0-1-8], [8:0-3-12,0-1-8]

LOADING (psf)		SPACING	2-0-0	CSI		DEFL	in	(loc)	l/defl	L/d	PLATES	GRIP
TCLL	20.0	Plates Increase	1.25	TC	0.35	Vert(LL)	-0.15	11	>999	240	MT20	244/190
TCDL	7.0	Lumber Increase	1.25	BC	0.46	Vert(TL)	-0.21	11	>999	180		
BCLL	10.0	Rep Stress Incr	NO	WB	0.39	Horz(TL)	0.06	8	n/a	n/a		
BCDL	5.0	Code	FBC2001/ANSI95	(Matrix)							Weight: 135 lb	

LUMBER
TOP CHORD 2 X 4 SYP No.2D
BOT CHORD 2 X 6 SYP No.1D
WEBS 2 X 4 SYP No.3

BRACING
TOP CHORD Sheathed or 3-3-3 oc purlins.
BOT CHORD Rigid ceiling directly applied or 6-10-5 oc bracing.

REACTIONS (lb/size) 2=2006/0-4-0, 8=2006/0-4-0
Max Horz 2=-116(load case 5)
Max Uplift2=-864(load case 4), 8=-864(load case 5)

FORCES (lb) - Maximum Compression/Maximum Tension
TOP CHORD 1-2=0/51, 2-3=-3698/1469, 3-4=-3550/1466, 4-5=-3214/1358, 5-6=-3214/1358, 6-7=-3550/1466, 7-8=-3698/1469, 8-9=0/51
BOT CHORD 2-13=-1286/3243, 12-13=-1493/3683, 11-12=-1493/3683, 10-11=-1493/3683, 8-10=-1247/3243
WEBS 3-13=-95/113, 4-13=-407/1212, 5-13=-671/352, 5-11=0/274, 5-10=-671/352, 6-10=-407/1212, 7-10=-95/114

NOTES
1) Unbalanced roof live loads have been considered for this design.
2) Wind: ASCE 7-98; 110mph (3-second gust); h=20ft; TCDL=4.2psf; BCDL=3.0psf; Category II; Exp B; enclosed; MWFRS gable end zone; Lumber DOL=1.60 plate grip DOL=1.60.
3) Provide adequate drainage to prevent water ponding.
4) Provide mechanical connection (by others) of truss to bearing plate capable of withstanding 864 lb uplift at joint 2 and 864 lb uplift at joint 8.
5) Girder carries hip end with 7-0-0 end setback.
6) Hanger(s) or other connection device(s) shall be provided sufficient to support concentrated load(s) 539 lb down and 277 lb up at 15-7-0, and 539 lb down and 277 lb up at 7-0-0 on bottom chord. The design/selection of such connection device(s) is the responsibility of others.
7) In the LOAD CASE(S) section, loads applied to the face of the truss are noted as front (F) or back (B).

LOAD CASE(S) Standard
1) Regular: Lumber Increase=1.25, Plate Increase=1.25
Uniform Loads (plf)
Vert: 1-4=-54, 4-6=-117(F=-63), 6-9=-54, 2-13=-30, 10-13=-65(F=-35), 8-10=-30
Concentrated Loads (lb)
Vert: 13=-539(F) 10=-539(F)

SEPTEMBER 30, 2005 TRUSS DESIGN ENGINEER:
THOMAS E. MILLER PE 56877, BYRON K. ANDERSON PE 60987
STRUCTURAL ENGINEERING AND INSPECTIONS, INC. EB 9196
16105 N. FLORIDA AVE. STE B, LUTZ, FL 33549

Job	Truss	Truss Type	Qty	Ply	WOODMAN PARK LOT 34 TURKEY RUN
L134662	T06	HIP	1	1	Job Reference (optional)

Dwg.#093005033

Builders FirstSource, Lake City, Fl 32055 — 6.200 s Jul 13 2005 MiTek Industries, Inc. Thu Sep 29 10:18:06 2005 Page 1

-2-0-0	4-6-10	9-0-0	13-7-0	18-0-6	22-7-0	24-7-0
2-0-0	4-6-10	4-5-6	4-7-0	4-5-6	4-6-10	2-0-0

Scale = 1:44.1

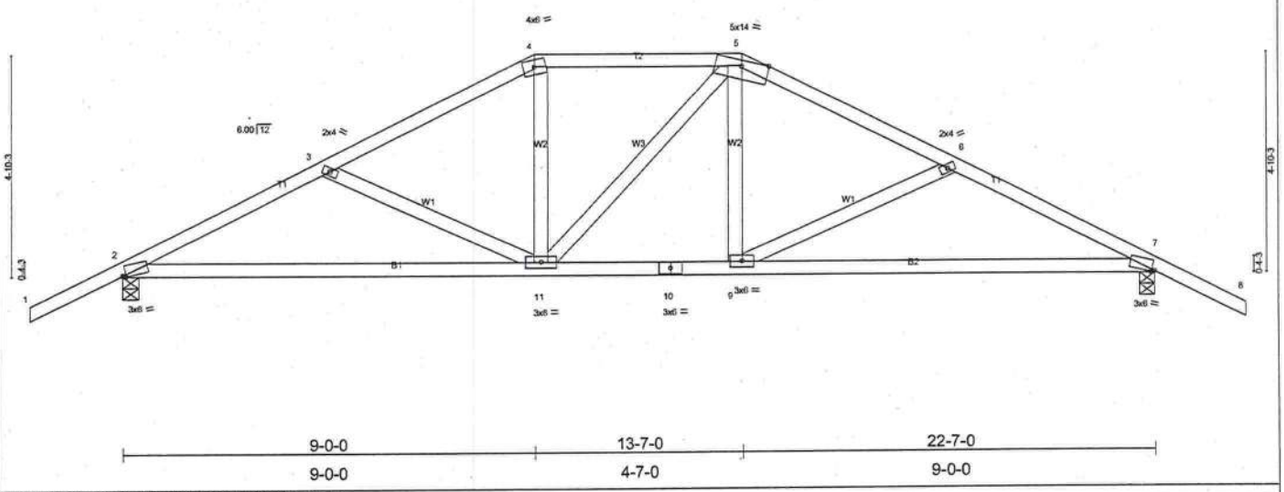

9-0-0	13-7-0	22-7-0
9-0-0	4-7-0	9-0-0

Plate Offsets (X,Y): [2:0-0-13,Edge], [7:0-0-13,Edge]

LOADING (psf)		SPACING	2-0-0	CSI		DEFL	in	(loc)	l/defl	L/d	PLATES	GRIP
TCLL	20.0	Plates Increase	1.25	TC	0.36	Vert(LL)	-0.16	7-9	>999	240	MT20	244/190
TCDL	7.0	Lumber Increase	1.25	BC	0.42	Vert(TL)	-0.24	7-9	>999	180		
BCLL	10.0	Rep Stress Incr	YES	WB	0.13	Horz(TL)	0.04	7	n/a	n/a		
BCDL	5.0	Code	FBC2001/ANSI95	(Matrix)							Weight: 114 lb	

LUMBER
TOP CHORD 2 X 4 SYP No.2D
BOT CHORD 2 X 4 SYP No.2D
WEBS 2 X 4 SYP No.3

BRACING
TOP CHORD Sheathed or 5-0-5 oc purlins.
BOT CHORD Rigid ceiling directly applied or 8-11-3 oc bracing.

REACTIONS (lb/size) 2=1051/0-4-0, 7=1051/0-4-0
Max Horz 2=134(load case 5)
Max Uplift2=-390(load case 5), 7=-390(load case 6)

FORCES (lb) - Maximum Compression/Maximum Tension
TOP CHORD 1-2=0/47, 2-3=-1557/769, 3-4=-1298/623, 4-5=-1120/620, 5-6=-1298/623, 6-7=-1557/769, 7-8=0/47
BOT CHORD 2-11=-518/1352, 10-11=-277/1119, 9-10=-277/1119, 7-9=-518/1352
WEBS 3-11=-268/268, 4-11=-68/309, 5-11=-104/106, 5-9=-68/309, 6-9=-269/268

NOTES
1) Unbalanced roof live loads have been considered for this design.
2) Wind: ASCE 7-98; 110mph (3-second gust); h=20ft; TCDL=4.2psf; BCDL=3.0psf; Category II; Exp B; enclosed; MWFRS gable end zone and C-C Exterior(2) zone; Lumber DOL=1.60 plate grip DOL=1.60. This truss is designed for C-C for members and forces, and for MWFRS for reactions specified.
3) Provide adequate drainage to prevent water ponding.
4) Provide mechanical connection (by others) of truss to bearing plate capable of withstanding 390 lb uplift at joint 2 and 390 lb uplift at joint 7.

LOAD CASE(S) Standard

SEPTEMBER 30, 2005 TRUSS DESIGN ENGINEER:
THOMAS E. MILLER PE 56877, BYRON K. ANDERSON PE 60987
STRUCTURAL ENGINEERING AND INSPECTIONS, INC. EB 9196
16105 N. FLORIDA AVE. STE B, LUTZ, FL 33549

Job	Truss	Truss Type	Qty	Ply	WOODMAN PARK LOT 34 TURKEY RUN
L134662	T07	HIP	1	1	Job Reference (optional)

Dwg.#093005034

Builders FirstSource, Lake City, Fl 32055 — 6.200 s Jul 13 2005 MiTek Industries, Inc. Thu Sep 29 10:18:06 2005 Page 1

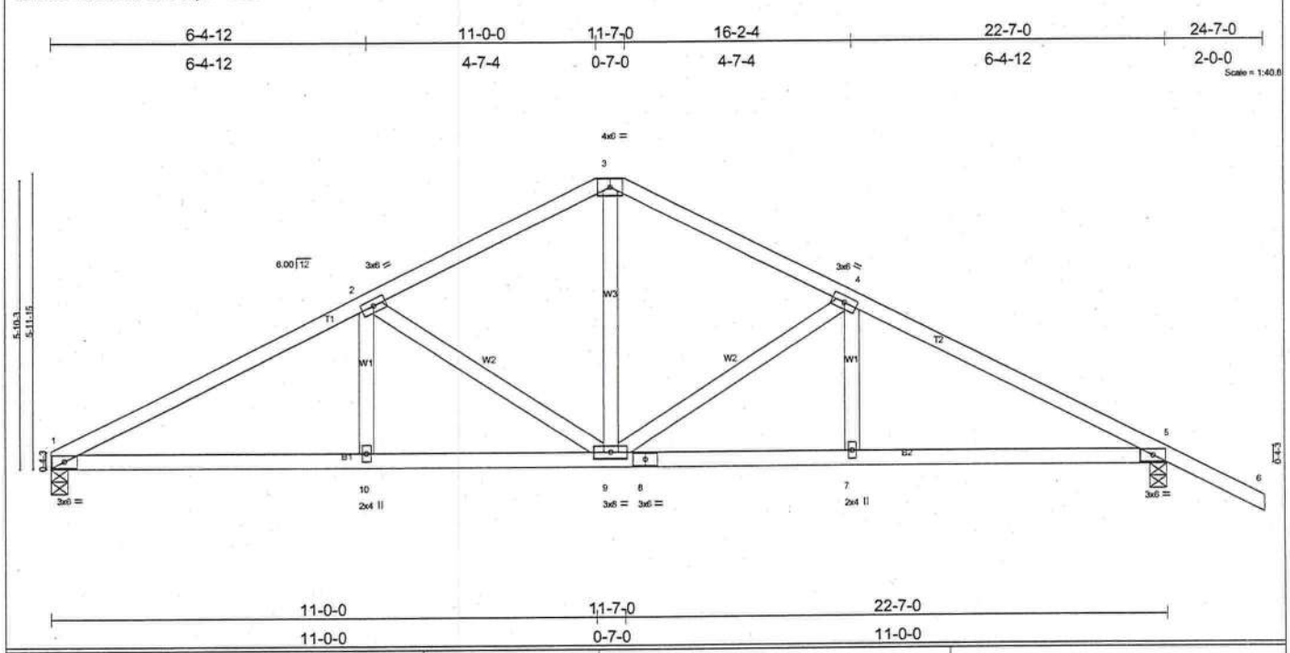

LOADING (psf)		SPACING	2-0-0	CSI		DEFL	in	(loc)	l/defl	L/d	PLATES	GRIP
TCLL	20.0	Plates Increase	1.25	TC	0.33	Vert(LL)	-0.09	1-10	>999	240	MT20	244/190
TCDL	7.0	Lumber Increase	1.25	BC	0.44	Vert(TL)	-0.13	1-10	>999	180		
BCLL	10.0	Rep Stress Incr	YES	WB	0.33	Horz(TL)	0.04	5	n/a	n/a		
BCDL	5.0	Code FBC2001/ANSI95		(Matrix)							Weight: 108 lb	

LUMBER
TOP CHORD 2 X 4 SYP No.2D
BOT CHORD 2 X 4 SYP No.2D
WEBS 2 X 4 SYP No.3

BRACING
TOP CHORD Sheathed or 4-10-10 oc purlins.
BOT CHORD Rigid ceiling directly applied or 8-5-2 oc bracing.

REACTIONS (lb/size) 1=929/0-4-0, 5=1057/0-4-0
Max Horz 1=-175(load case 6)
Max Uplift1=-281(load case 5), 5=-412(load case 6)

FORCES (lb) - Maximum Compression/Maximum Tension
TOP CHORD 1-2=-1612/820, 2-3=-1101/654, 3-4=-1099/652, 4-5=-1586/777, 5-6=0/47
BOT CHORD 1-10=-549/1369, 9-10=-549/1369, 8-9=-503/1341, 7-8=-503/1341, 5-7=-503/1341
WEBS 2-9=-548/380, 4-9=-513/325, 3-9=-357/691, 2-10=0/206, 4-7=0/189

NOTES
1) Unbalanced roof live loads have been considered for this design.
2) Wind: ASCE 7-98; 110mph (3-second gust); h=20ft; TCDL=4.2psf; BCDL=3.0psf; Category II; Exp B; enclosed; MWFRS gable end zone and C-C Exterior(2) zone; Lumber DOL=1.60 plate grip DOL=1.60. This truss is designed for C-C for members and forces, and for MWFRS for reactions specified.
3) Provide mechanical connection (by others) of truss to bearing plate capable of withstanding 281 lb uplift at joint 1 and 412 lb uplift at joint 5.

LOAD CASE(S) Standard

SEPTEMBER 30, 2005 TRUSS DESIGN ENGINEER:
THOMAS E. MILLER PE 56877, BYRON K. ANDERSON PE 60987
STRUCTURAL ENGINEERING AND INSPECTIONS, INC. EB 9196
16105 N. FLORIDA AVE. STE B, LUTZ, FL 33549

Job	Truss	Truss Type	Qty	Ply	WOODMAN PARK LOT 34 TURKEY RUN
L134662	T08	COMMON	5	1	Job Reference (optional)

Dwg.#093005035

Builders FirstSource, Lake City, Fl 32055

6.200 s Jul 13 2005 MiTek Industries, Inc. Thu Sep 29 10:18:07 2005 Page 1

5-11-0	11-3-8	16-8-0	22-7-0	24-7-0
5-11-0	5-4-8	5-4-8	5-11-0	2-0-0

Scale = 1:40.3

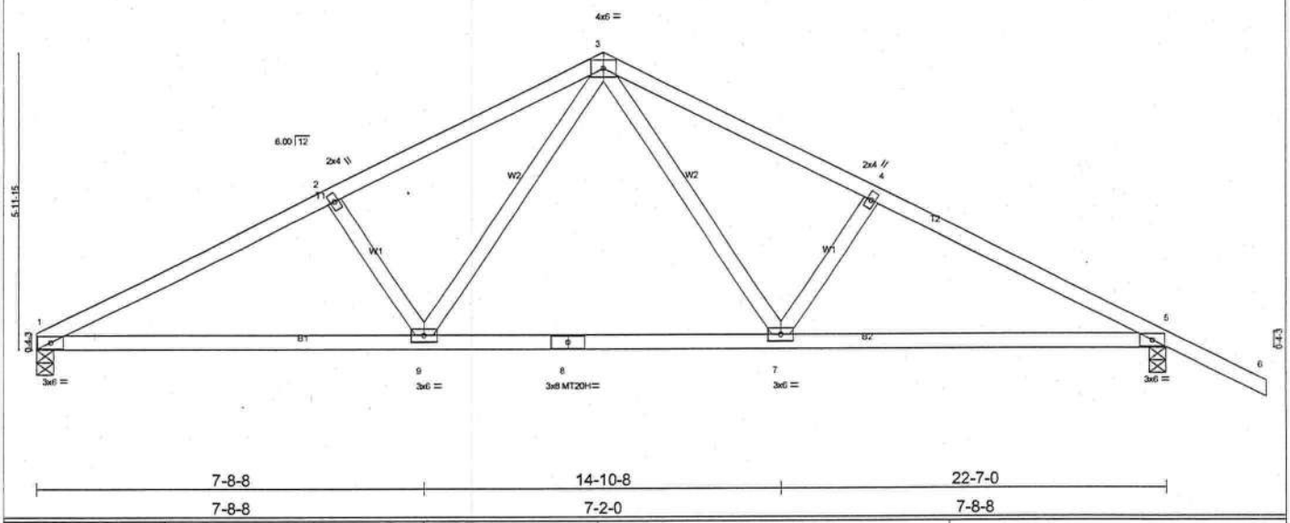

7-8-8	14-10-8	22-7-0
7-8-8	7-2-0	7-8-8

LOADING (psf)		SPACING	2-0-0	CSI		DEFL	in	(loc)	l/defl	L/d	PLATES	GRIP
TCLL	20.0	Plates Increase	1.25	TC	0.37	Vert(LL)	-0.22	7-9	>999	240	MT20	244/190
TCDL	7.0	Lumber Increase	1.25	BC	0.83	Vert(TL)	-0.30	7-9	>880	180	MT20H	187/143
BCLL	10.0	Rep Stress Incr	NO	WB	0.33	Horz(TL)	0.05	5	n/a	n/a		
BCDL	5.0	Code	FBC2001/ANSI95	(Matrix)							Weight: 104 lb	

LUMBER
TOP CHORD 2 X 4 SYP No.2D
BOT CHORD 2 X 4 SYP No.2D
WEBS 2 X 4 SYP No.3

BRACING
TOP CHORD Sheathed or 4-4-10 oc purlins.
BOT CHORD Rigid ceiling directly applied or 7-2-7 oc bracing.

REACTIONS (lb/size) 1=1108/0-4-0, 5=1236/0-4-0
Max Horz 1=-175(load case 6)
Max Uplift1=-349(load case 5), 5=-480(load case 6)

FORCES (lb) - Maximum Compression/Maximum Tension
TOP CHORD 1-2=-2003/1058, 2-3=-1852/1050, 3-4=-1830/1014, 4-5=-1994/1020, 5-6=0/47
BOT CHORD 1-9=-768/1734, 8-9=-383/1179, 7-8=-383/1179, 5-7=-724/1707
WEBS 2-9=-275/314, 3-9=-406/799, 3-7=-349/766, 4-7=-258/289

NOTES
1) Unbalanced roof live loads have been considered for this design.
2) Wind: ASCE 7-98; 110mph (3-second gust); h=20ft; TCDL=4.2psf; BCDL=3.0psf; Category II; Exp B; enclosed; MWFRS gable end zone and C-C Exterior(2) zone; Lumber DOL=1.60 plate grip DOL=1.60. This truss is designed for C-C for members and forces, and for MWFRS for reactions specified.
3) All plates are MT20 plates unless otherwise indicated.
4) Provide mechanical connection (by others) of truss to bearing plate capable of withstanding 349 lb uplift at joint 1 and 480 lb uplift at joint 5.
5) In the LOAD CASE(S) section, loads applied to the face of the truss are noted as front (F) or back (B).

LOAD CASE(S) Standard
1) Regular: Lumber Increase=1.25, Plate Increase=1.25
Uniform Loads (plf)
Vert: 1-3=-54, 3-6=-54, 1-9=-30, 7-9=-80(F=-50), 5-7=-30

SEPTEMBER 30, 2005 TRUSS DESIGN ENGINEER:
THOMAS E. MILLER PE 56877, BYRON K. ANDERSON PE 60987
STRUCTURAL ENGINEERING AND INSPECTIONS, INC. EB 9196
16105 N. FLORIDA AVE. STE B, LUTZ, FL 33549

Job	Truss	Truss Type	Qty	Ply	WOODMAN PARK LOT 34 TURKEY RUN
L134662	T09	SPECIAL	1	2	Job Reference (optional)

Dwg.#093005036

Builders FirstSource, Lake City, Fl 32055 — 6.200 s Jul 13 2005 MiTek Industries, Inc. Thu Sep 29 10:18:08 2005 Page 1

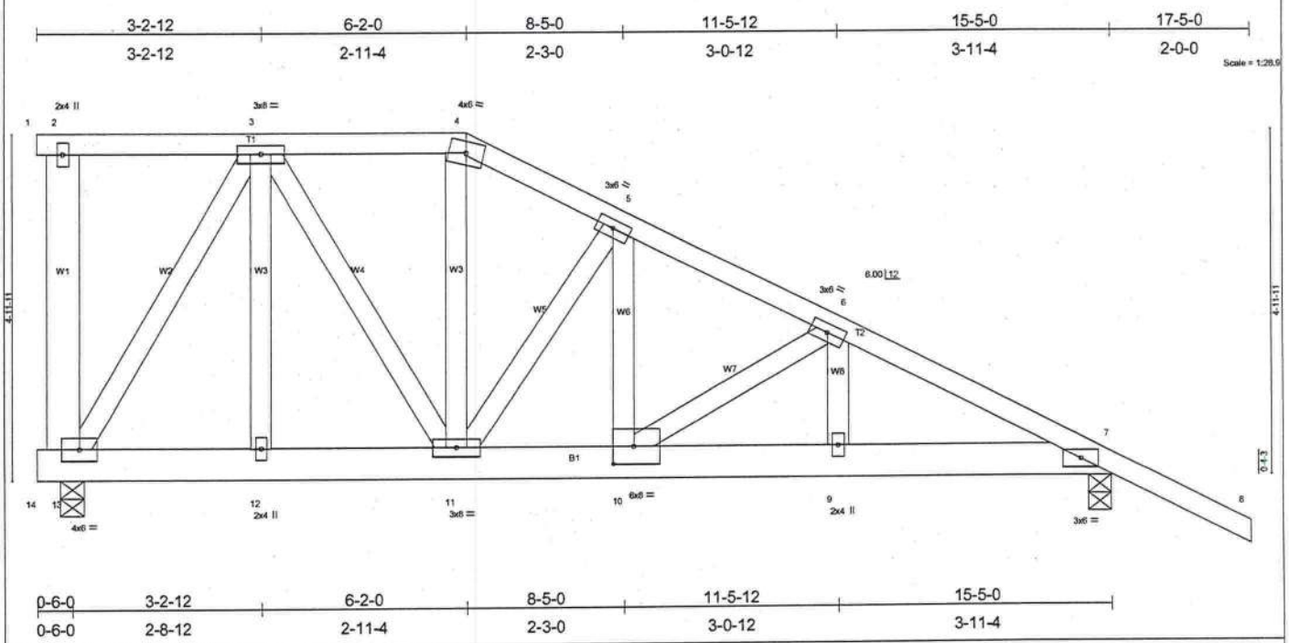

0-6-0	3-2-12	6-2-0	8-5-0	11-5-12	15-5-0
0-6-0	2-8-12	2-11-4	2-3-0	3-0-12	3-11-4

Plate Offsets (X,Y): [10:0-3-8,0-3-0]

LOADING (psf)		SPACING	2-0-0	CSI		DEFL	in	(loc)	l/defl	L/d	PLATES	GRIP
TCLL	20.0	Plates Increase	1.25	TC	0.14	Vert(LL)	-0.05	10	>999	240	MT20	244/190
TCDL	7.0	Lumber Increase	1.25	BC	0.29	Vert(TL)	-0.07	9-10	>999	180		
BCLL	10.0	Rep Stress Incr	NO	WB	0.36	Horz(TL)	0.02	7	n/a	n/a		
BCDL	5.0	Code	FBC2001/ANSI95	(Matrix)							Weight: 237 lb	

LUMBER
TOP CHORD 2 X 4 SYP No.2D
BOT CHORD 2 X 6 SYP No.1D
WEBS 2 X 4 SYP No.3 *Except*
W1 2 X 6 SYP No.1D

BRACING
TOP CHORD Sheathed or 6-0-0 oc purlins, except end verticals.
BOT CHORD Rigid ceiling directly applied or 10-0-0 oc bracing.

REACTIONS (lb/size) 13=3281/0-4-0, 7=2260/0-4-0
Max Horz 13=-279(load case 5)
Max Uplift13=-1204(load case 2), 7=-884(load case 5)

FORCES (lb) - Maximum Compression/Maximum Tension
TOP CHORD 2-13=-128/78, 1-2=0/0, 2-3=-82/31, 3-4=-2577/956, 4-5=-2857/1030, 5-6=-4053/1438, 6-7=-4243/1421, 7-8=0/51
BOT CHORD 13-14=0/0, 12-13=-466/1621, 11-12=-466/1621, 10-11=-1145/3598, 9-10=-1169/3732, 7-9=-1169/3732
WEBS 3-13=-2918/1070, 3-12=-280/825, 3-11=-711/1840, 4-11=-379/1086, 5-11=-1853/744, 5-10=-694/1926, 6-10=-159/64, 6-9=0/84

NOTES
1) Hanger(s) or other connection device(s) shall be provided sufficient to support concentrated load(s) 1540 lb down and 581 lb up at 8-5-0 on bottom chord. The design/selection of such connection device(s) is the responsibility of others.
2) 2-ply truss to be connected together with 0.131"x3" Nails as follows:
Top chords connected as follows: 2 X 6 - 2 rows at 0-9-0 oc, 2 X 4 - 1 row at 0-9-0 oc.
Bottom chords connected as follows: 2 X 6 - 2 rows at 0-9-0 oc.
Webs connected as follows: 2 X 4 - 1 row at 0-9-0 oc, Except member 5-10 2 X 4 - 1 row at 0-6-0 oc.
Hanger(s) or other connection device(s) shall be provided sufficient to support concentrated load(s) 1540 lb down and 581 lb up at 8-5-0 on bottom chord. The design/selection of such connection device(s) is the responsibility of others.
3) All loads are considered equally applied to all plies, except if noted as front (F) or back (B) face in the LOAD CASE(S) section. Ply to ply connections have been provided to distribute only loads noted as (F) or (B), unless otherwise indicated.
4) Wind: ASCE 7-98; 110mph (3-second gust); h=20ft; TCDL=4.2psf; BCDL=3.0psf; Category II; Exp B; enclosed; MWFRS gable end zone; Lumber DOL=1.60 plate grip DOL=1.60.
5) Provide adequate drainage to prevent water ponding.
6) Provide mechanical connection (by others) of truss to bearing plate capable of withstanding 1204 lb uplift at joint 13 and 884 lb uplift at joint 7.
7) Girder carries tie-in span(s): 17-2-8 from 0-0-0 to 8-5-0
8) Hanger(s) or other connection device(s) shall be provided sufficient to support concentrated load(s) 1540 lb down and 581 lb up at 8-5-0 on bottom chord. The design/selection of such connection device(s) is the responsibility of others.

LOAD CASE(S) Standard
1) Regular: Lumber Increase=1.25, Plate Increase=1.25
Uniform Loads (plf)
Vert: 1-2=-14, 2-4=-54, 4-8=-54, 13-14=-312(F), 10-13=-342(F=-312), 7-10=-30
Concentrated Loads (lb)
Vert: 10=-1540(F)

SEPTEMBER 30, 2005 TRUSS DESIGN ENGINEER:
THOMAS E. MILLER PE 56877, BYRON K. ANDERSON PE 60987
STRUCTURAL ENGINEERING AND INSPECTIONS, INC. EB 9196
16105 N. FLORIDA AVE. STE B, LUTZ, FL 33549

Job	Truss	Truss Type	Qty	Ply	WOODMAN PARK LOT 34 TURKEY RUN
L134662	T10	SPECIAL	1	1	Job Reference (optional)

Dwg.#093005037

Builders FirstSource, Lake City, Fl 32055 — 6.200 s Jul 13 2005 MiTek Industries, Inc. Thu Sep 29 10:18:09 2005 Page 1

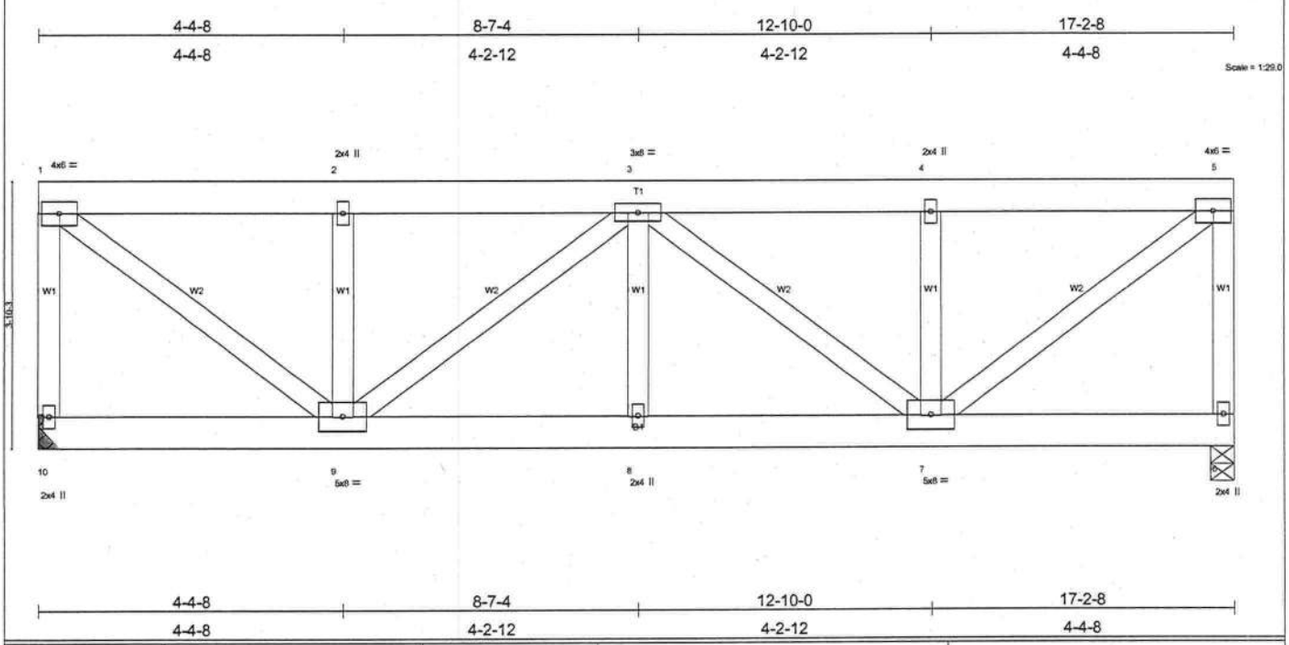

LOADING (psf)		SPACING	2-0-0	CSI		DEFL	in	(loc)	l/defl	L/d	PLATES	GRIP
TCLL	20.0	Plates Increase	1.25	TC	0.57	Vert(LL)	-0.05	8	>999	240	MT20	244/190
TCDL	7.0	Lumber Increase	1.25	BC	0.25	Vert(TL)	-0.07	8	>999	180		
BCLL	10.0	Rep Stress Incr	NO	WB	0.59	Horz(TL)	0.01	6	n/a	n/a		
BCDL	5.0	Code FBC2001/ANSI95		(Matrix)							Weight: 131 lb	

LUMBER
TOP CHORD 2 X 6 SYP No.1D
BOT CHORD 2 X 6 SYP No.1D
WEBS 2 X 4 SYP No.3

BRACING
TOP CHORD Sheathed or 6-0-0 oc purlins, except end verticals.
BOT CHORD Rigid ceiling directly applied or 8-10-1 oc bracing.

REACTIONS (lb/size) 10=1539/Mechanical, 6=1539/0-4-0
Max Uplift10=-695(load case 2), 6=-695(load case 2)

FORCES (lb) - Maximum Compression/Maximum Tension
TOP CHORD 1-10=-1392/700, 1-2=-1495/672, 2-3=-1495/672, 3-4=-1495/672, 4-5=-1495/672, 5-6=-1392/700
BOT CHORD 9-10=-25/53, 8-9=-897/1979, 7-8=-897/1979, 6-7=-25/53
WEBS 1-9=-829/1847, 2-9=-505/425, 3-9=-620/288, 3-8=0/280, 3-7=-620/288, 4-7=-505/425, 5-7=-829/1847

NOTES
1) Wind: ASCE 7-98; 110mph (3-second gust); h=20ft; TCDL=4.2psf; BCDL=3.0psf; Category II; Exp B; enclosed; MWFRS gable end zone; Lumber DOL=1.60 plate grip DOL=1.60.
2) Provide adequate drainage to prevent water ponding.
3) Refer to girder(s) for truss to truss connections.
4) Provide mechanical connection (by others) of truss to bearing plate capable of withstanding 695 lb uplift at joint 10 and 695 lb uplift at joint 6.
5) Girder carries hip end with 0-0-0 right side setback, 0-0-0 left side setback, and 7-0-0 end setback.
6) In the LOAD CASE(S) section, loads applied to the face of the truss are noted as front (F) or back (B).

LOAD CASE(S) Standard
1) Regular: Lumber Increase=1.25, Plate Increase=1.25
Uniform Loads (plf)
Vert: 1-5=-117(F=-63), 6-10=-65(F=-35)

SEPTEMBER 30, 2005 TRUSS DESIGN ENGINEER:
THOMAS E. MILLER PE 56877, BYRON K. ANDERSON PE 60987
STRUCTURAL ENGINEERING AND INSPECTIONS, INC. EB 9196
16105 N. FLORIDA AVE. STE B, LUTZ, FL 33549

Job	Truss	Truss Type	Qty	Ply	WOODMAN PARK LOT 34 TURKEY RUN
L134662	T10A	SPECIAL	1	1	Job Reference (optional)

Dwg.#093005038

Builders FirstSource, Lake City, Fl 32055 — 6.200 s Jul 13 2005 MiTek Industries, Inc. Thu Sep 29 10:18:09 2005 Page 1

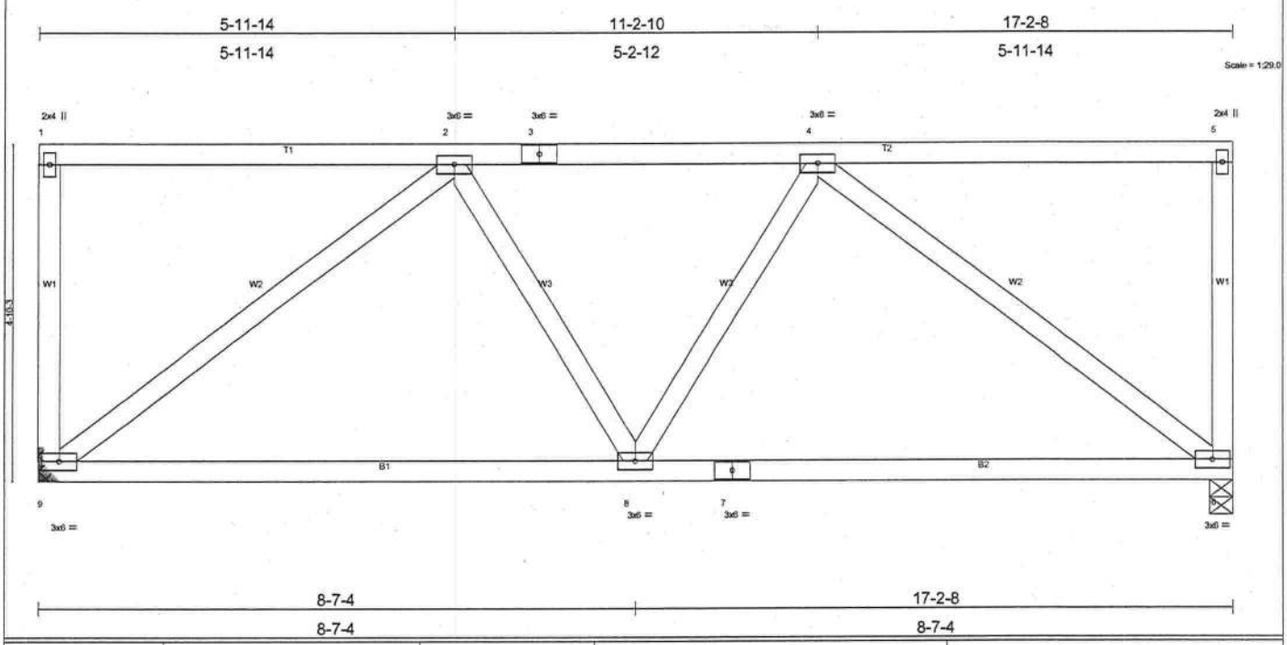

LOADING (psf)		SPACING	2-0-0	CSI		DEFL	in	(loc)	l/defl	L/d	PLATES	GRIP
TCLL	20.0	Plates Increase	1.25	TC	0.42	Vert(LL)	-0.08	8-9	>999	240	MT20	244/190
TCDL	7.0	Lumber Increase	1.25	BC	0.33	Vert(TL)	-0.12	8-9	>999	180		
BCLL	10.0	Rep Stress Incr	YES	WB	0.70	Horz(TL)	0.01	6	n/a	n/a		
BCDL	5.0	Code FBC2001/ANSI95		(Matrix)							Weight: 100 lb	

LUMBER
TOP CHORD 2 X 4 SYP No.2D
BOT CHORD 2 X 4 SYP No.2D
WEBS 2 X 4 SYP No.3

BRACING
TOP CHORD Sheathed or 6-0-0 oc purlins, except end verticals.
BOT CHORD Rigid ceiling directly applied or 10-0-0 oc bracing.

REACTIONS (lb/size) 9=710/Mechanical, 6=710/0-4-0
Max Uplift9=-268(load case 3), 6=-268(load case 3)

FORCES (lb) - Maximum Compression/Maximum Tension
TOP CHORD 1-9=-154/105, 1-2=-53/12, 2-3=-693/241, 3-4=-693/241, 4-5=-53/12, 5-6=-154/105
BOT CHORD 8-9=-259/616, 7-8=-259/616, 6-7=-259/616
WEBS 2-9=-713/314, 2-8=0/156, 4-8=0/156, 4-6=-713/314

NOTES
1) Wind: ASCE 7-98; 110mph (3-second gust); h=20ft; TCDL=4.2psf; BCDL=3.0psf; Category II; Exp B; enclosed; MWFRS gable end zone and C-C Exterior(2) zone; Lumber DOL=1.60 plate grip DOL=1.60. This truss is designed for C-C for members and forces, and for MWFRS for reactions specified.
2) Provide adequate drainage to prevent water ponding.
3) Refer to girder(s) for truss to truss connections.
4) Provide mechanical connection (by others) of truss to bearing plate capable of withstanding 268 lb uplift at joint 9 and 268 lb uplift at joint 6.

LOAD CASE(S) Standard

SEPTEMBER 30, 2005 TRUSS DESIGN ENGINEER:
THOMAS E. MILLER PE 56877, BYRON K. ANDERSON PE 60987
STRUCTURAL ENGINEERING AND INSPECTIONS, INC. EB 9196
16105 N. FLORIDA AVE. STE B, LUTZ, FL 33549

Job	Truss	Truss Type	Qty	Ply	WOODMAN PARK LOT 34 TURKEY RUN
L134662	T11	MONO HIP	1	1	Job Reference (optional)

Dwg.#093005039

Builders FirstSource, Lake City, Fl 32055

6.200 s Jul 13 2005 MiTek Industries, Inc. Thu Sep 29 10:18:10 2005 Page 1

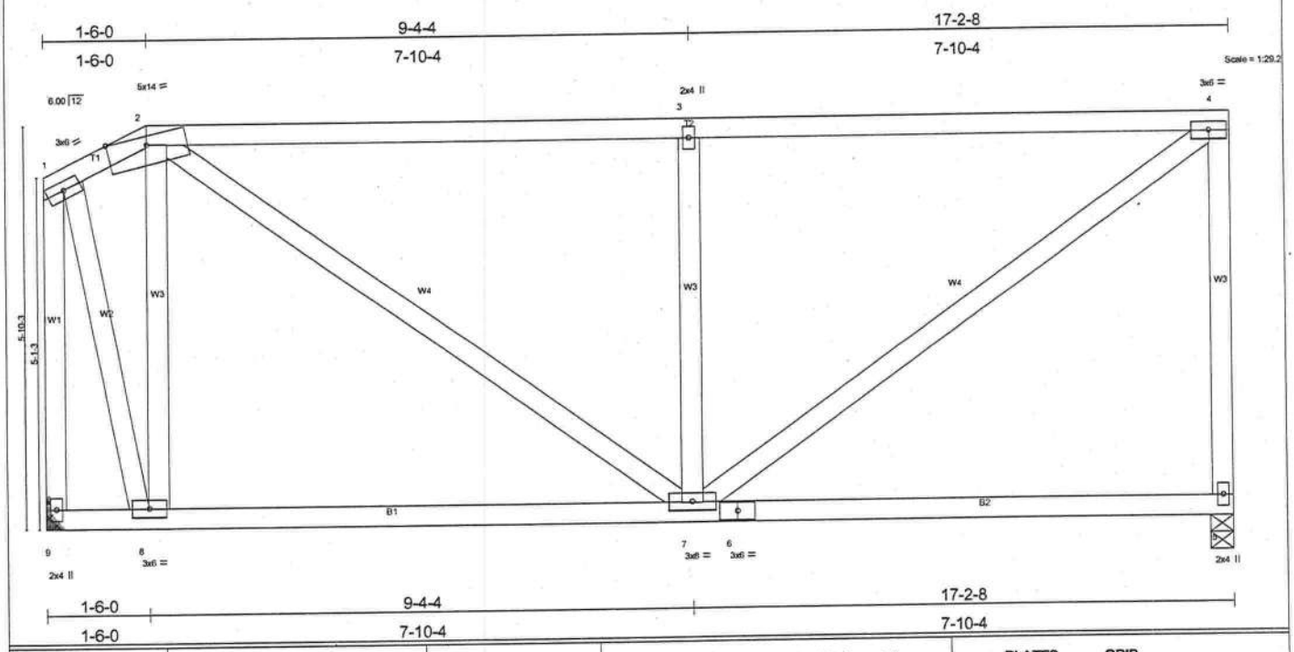

LOADING (psf)		SPACING	2-0-0	CSI		DEFL	in	(loc)	l/defl	L/d	PLATES	GRIP
TCLL	20.0	Plates Increase	1.25	TC	0.78	Vert(LL)	-0.07	7-8	>999	240	MT20	244/190
TCDL	7.0	Lumber Increase	1.25	BC	0.22	Vert(TL)	-0.10	7-8	>999	180		
BCLL	10.0	Rep Stress Incr	YES	WB	0.47	Horz(TL)	0.00	5	n/a	n/a		
BCDL	5.0	Code FBC2001/ANSI95		(Matrix)							Weight: 116 lb	

LUMBER
TOP CHORD 2 X 4 SYP No.2D
BOT CHORD 2 X 4 SYP No.2D
WEBS 2 X 4 SYP No.3 *Except*
W1 2 X 4 SYP No.2D

BRACING
TOP CHORD Sheathed or 6-0-0 oc purlins, except end verticals.
BOT CHORD Rigid ceiling directly applied or 10-0-0 oc bracing.

REACTIONS (lb/size) 5=710/0-4-0, 9=710/Mechanical
Max Horz 9=32(load case 5)
Max Uplift5=-273(load case 4), 9=-239(load case 4)

FORCES (lb) - Maximum Compression/Maximum Tension
TOP CHORD 1-2=-189/65, 2-3=-621/261, 3-4=-621/262, 4-5=-600/307, 1-9=-769/260
BOT CHORD 8-9=-42/3, 7-8=-123/219, 6-7=-20/50, 5-6=-20/50
WEBS 2-8=-563/338, 2-7=-184/492, 3-7=-451/329, 4-7=-298/703, 1-8=-299/804

NOTES
1) Wind: ASCE 7-98; 110mph (3-second gust); h=20ft; TCDL=4.2psf; BCDL=3.0psf; Category II; Exp B; enclosed; MWFRS gable end zone and C-C Exterior(2) zone; Lumber DOL=1.60 plate grip DOL=1.60. This truss is designed for C-C for members and forces, and for MWFRS for reactions specified.
2) Provide adequate drainage to prevent water ponding.
3) Refer to girder(s) for truss to truss connections.
4) Provide mechanical connection (by others) of truss to bearing plate capable of withstanding 273 lb uplift at joint 5 and 239 lb uplift at joint 9.

LOAD CASE(S) Standard

SEPTEMBER 30, 2005 TRUSS DESIGN ENGINEER:
THOMAS E. MILLER PE 56877, BYRON K. ANDERSON PE 60987
STRUCTURAL ENGINEERING AND INSPECTIONS, INC. EB 9196
16105 N. FLORIDA AVE. STE B, LUTZ, FL 33549

Job	Truss	Truss Type	Qty	Ply	WOODMAN PARK LOT 34 TURKEY RUN
L134662	T11A	MONO HIP	1	1	Job Reference (optional)

Dwg.#093005040

Builders FirstSource, Lake City, Fl 32055

6.200 s Jul 13 2005 MiTek Industries, Inc. Thu Sep 29 10:18:11 2005 Page 1

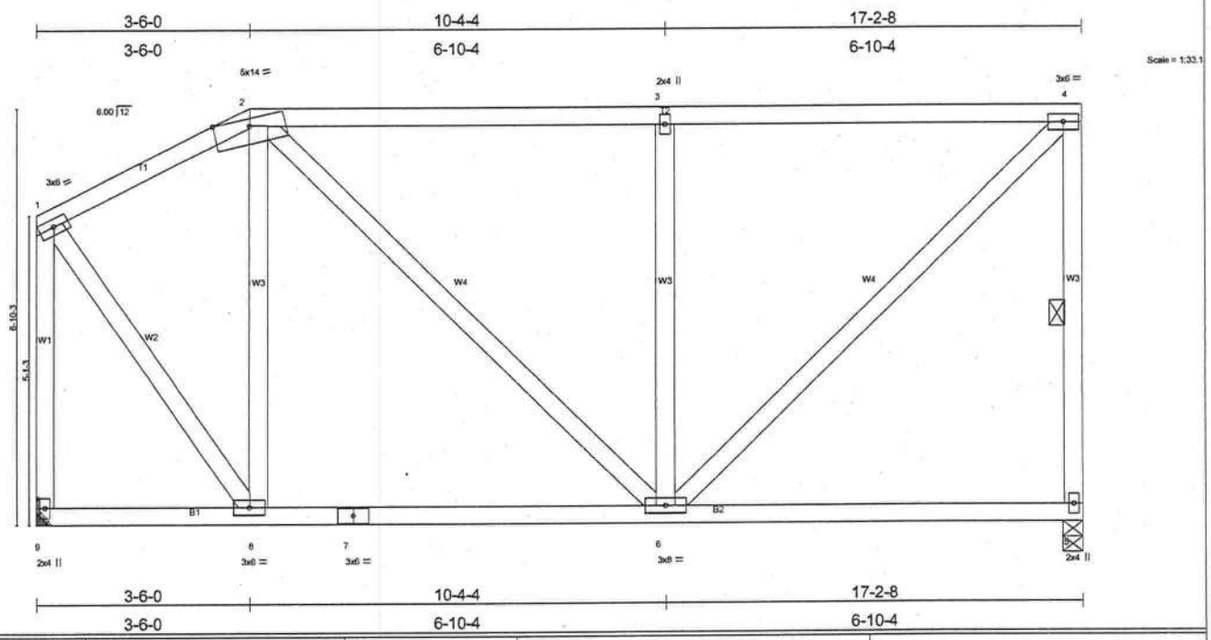

LOADING (psf)		SPACING	2-0-0	CSI		DEFL	in	(loc)	l/defl	L/d	PLATES	GRIP
TCLL	20.0	Plates Increase	1.25	TC	0.37	Vert(LL)	-0.04	6-8	>999	240	MT20	244/190
TCDL	7.0	Lumber Increase	1.25	BC	0.20	Vert(TL)	-0.06	6-8	>999	180		
BCLL	10.0	Rep Stress Incr	YES	WB	0.47	Horz(TL)	0.00	5	n/a	n/a		
BCDL	5.0	Code FBC2001/ANSI95		(Matrix)							Weight: 122 lb	

LUMBER
TOP CHORD 2 X 4 SYP No.2D
BOT CHORD 2 X 4 SYP No.2D
WEBS 2 X 4 SYP No.3 *Except*
W1 2 X 4 SYP No.2D

BRACING
TOP CHORD Sheathed or 6-0-0 oc purlins, except end verticals.
BOT CHORD Rigid ceiling directly applied or 10-0-0 oc bracing.
WEBS 1 Row at midpt 4-5

REACTIONS (lb/size) 5=710/0-4-0, 9=710/Mechanical
Max Horz 9=78(load case 5)
Max Uplift5=-279(load case 4), 9=-198(load case 4)

FORCES (lb) - Maximum Compression/Maximum Tension
TOP CHORD 1-2=-398/173, 2-3=-494/231, 3-4=-494/231, 4-5=-616/329, 1-9=-678/283
BOT CHORD 8-9=-104/4, 7-8=-207/330, 6-7=-207/330, 5-6=-12/29
WEBS 2-8=-294/183, 2-6=-94/227, 3-6=-398/288, 4-6=-307/649, 1-8=-183/569

NOTES
1) Wind: ASCE 7-98; 110mph (3-second gust); h=20ft; TCDL=4.2psf; BCDL=3.0psf; Category II; Exp B; enclosed; MWFRS gable end zone and C-C Exterior(2) zone; Lumber DOL=1.60 plate grip DOL=1.60. This truss is designed for C-C for members and forces, and for MWFRS for reactions specified.
2) Provide adequate drainage to prevent water ponding.
3) Refer to girder(s) for truss to truss connections.
4) Provide mechanical connection (by others) of truss to bearing plate capable of withstanding 279 lb uplift at joint 5 and 198 lb uplift at joint 9.

LOAD CASE(S) Standard

SEPTEMBER 30, 2005 TRUSS DESIGN ENGINEER:
THOMAS E. MILLER PE 56877, BYRON K. ANDERSON PE 60987
STRUCTURAL ENGINEERING AND INSPECTIONS, INC. EB 9196
16105 N. FLORIDA AVE. STE B, LUTZ, FL 33549

Job	Truss	Truss Type	Qty	Ply	WOODMAN PARK LOT 34 TURKEY RUN	Dwg.#093005041
L134662	T12	SPECIAL	1	1	Job Reference (optional)	

Builders FirstSource, Lake City, Fl 32055 — 6.200 s Jul 13 2005 MiTek Industries, Inc. Thu Sep 29 10:18:11 2005 Page 1

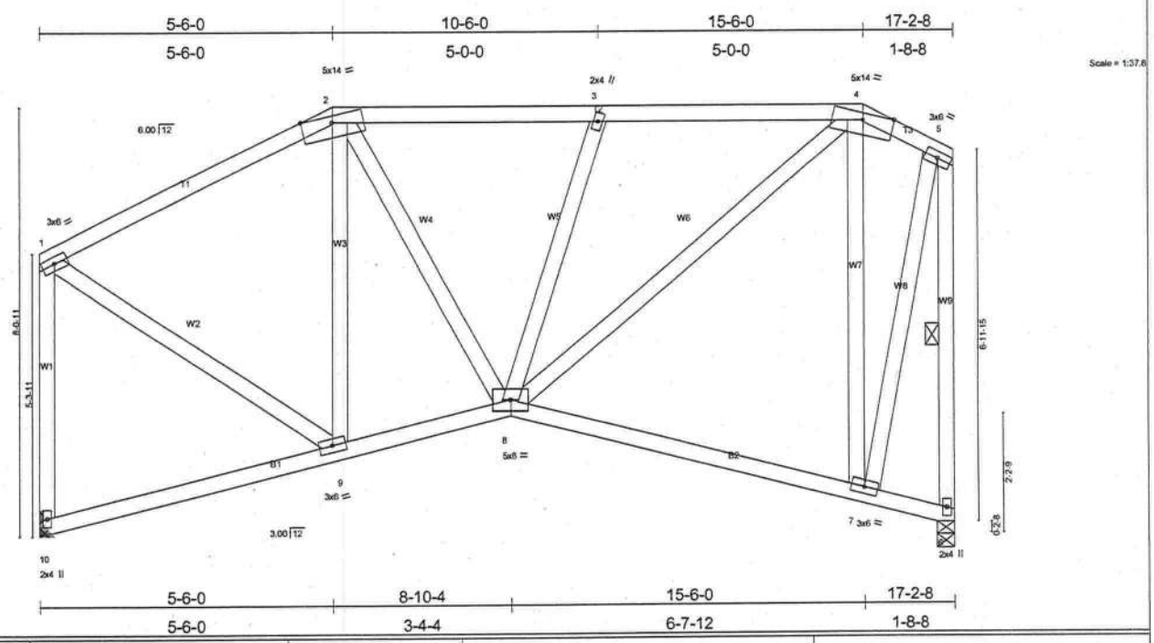

LOADING (psf)		SPACING	2-0-0	CSI		DEFL	in	(loc)	l/defl	L/d	PLATES	GRIP
TCLL	20.0	Plates Increase	1.25	TC	0.28	Vert(LL)	-0.06	7-8	>999	240	MT20	244/190
TCDL	7.0	Lumber Increase	1.25	BC	0.20	Vert(TL)	-0.08	7-8	>999	180		
BCLL	10.0	Rep Stress Incr	YES	WB	0.47	Horz(TL)	0.02	6	n/a	n/a		
BCDL	5.0	Code FBC2001/ANSI95		(Matrix)							Weight: 138 lb	

LUMBER
TOP CHORD 2 X 4 SYP No.2D
BOT CHORD 2 X 4 SYP No.2D
WEBS 2 X 4 SYP No.3 *Except*
W1 2 X 4 SYP No.2D, W9 2 X 4 SYP No.2D

BRACING
TOP CHORD Sheathed or 6-0-0 oc purlins, except end verticals.
BOT CHORD Rigid ceiling directly applied or 10-0-0 oc bracing.
WEBS 1 Row at midpt 5-6

REACTIONS (lb/size) 10=710/Mechanical, 6=710/0-4-0
Max Horz 10=103(load case 5)
Max Uplift10=-161(load case 4), 6=-229(load case 4)

FORCES (lb) - Maximum Compression/Maximum Tension
TOP CHORD 1-2=-557/270, 2-3=-549/322, 3-4=-631/377, 4-5=-189/94, 1-10=-632/333, 5-6=-735/326
BOT CHORD 9-10=-138/51, 8-9=-275/464, 7-8=-77/192, 6-7=0/22
WEBS 2-9=-257/157, 2-8=-81/250, 3-8=-304/212, 4-8=-339/611, 4-7=-512/338, 1-9=-164/495, 5-7=-280/665

NOTES
1) Unbalanced roof live loads have been considered for this design.
2) Wind: ASCE 7-98; 110mph (3-second gust); h=20ft; TCDL=4.2psf; BCDL=3.0psf; Category II; Exp B; enclosed; MWFRS gable end zone and C-C Exterior(2) zone; Lumber DOL=1.60 plate grip DOL=1.60. This truss is designed for C-C for members and forces, and for MWFRS for reactions specified.
3) Provide adequate drainage to prevent water ponding.
4) Refer to girder(s) for truss to truss connections.
5) Bearing at joint(s) 6 considers parallel to grain value using ANSI/TPI 1 angle to grain formula. Building designer should verify capacity of bearing surface.
6) Provide mechanical connection (by others) of truss to bearing plate capable of withstanding 161 lb uplift at joint 10 and 229 lb uplift at joint 6.

LOAD CASE(S) Standard

SEPTEMBER 30, 2005 TRUSS DESIGN ENGINEER:
THOMAS E. MILLER PE 56877, BYRON K. ANDERSON PE 60987
STRUCTURAL ENGINEERING AND INSPECTIONS, INC. EB 9196
16105 N. FLORIDA AVE. STE B, LUTZ, FL 33549

Job	Truss	Truss Type	Qty	Ply	WOODMAN PARK LOT 34 TURKEY RUN
L134662	T13	SPECIAL	1	1	Job Reference (optional)

Dwg.#093005042

Builders FirstSource, Lake City, Fl 32055 — 6.200 s Jul 13 2005 MiTek Industries, Inc. Thu Sep 29 10:18:12 2005 Page 1

-2-0-0	5-5-4	10-4-0	17-0-0	23-0-0	26-8-8
2-0-0	5-5-4	4-10-12	6-8-0	6-0-0	3-8-8

Scale = 1:49.0

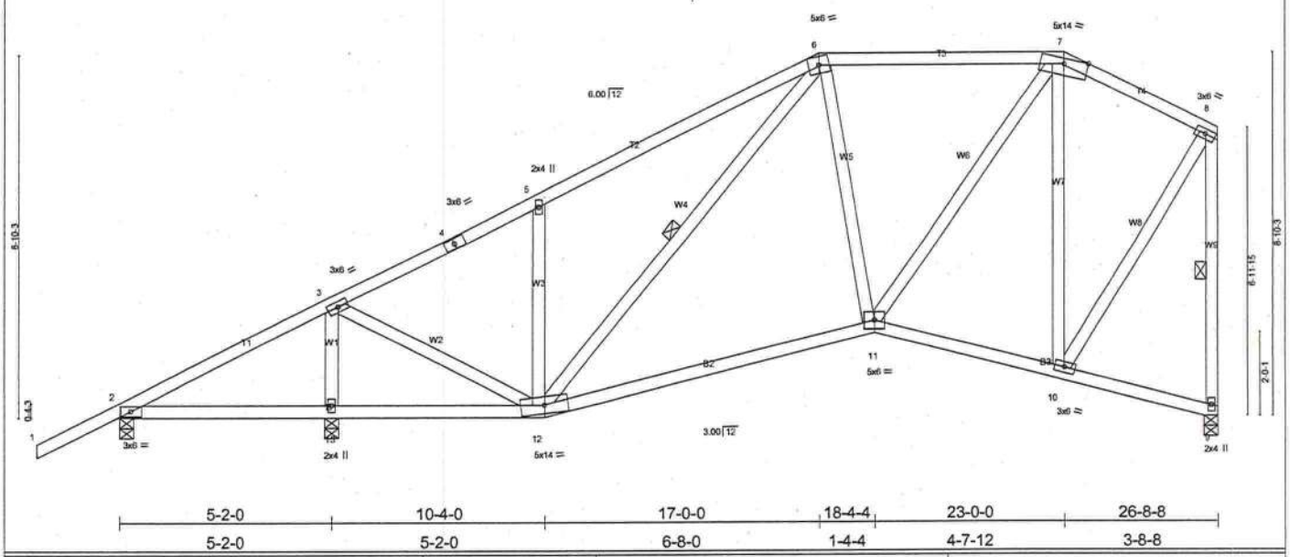

5-2-0	10-4-0	17-0-0	18-4-4	23-0-0	26-8-8
5-2-0	5-2-0	6-8-0	1-4-4	4-7-12	3-8-8

LOADING (psf)		SPACING	2-0-0	CSI		DEFL	in	(loc)	l/defl	L/d	PLATES	GRIP
TCLL	20.0	Plates Increase	1.25	TC	0.32	Vert(LL)	-0.11	11-12	>999	240	MT20	244/190
TCDL	7.0	Lumber Increase	1.25	BC	0.28	Vert(TL)	-0.16	11-12	>999	180		
BCLL	10.0	Rep Stress Incr	YES	WB	0.58	Horz(TL)	0.02	9	n/a	n/a		
BCDL	5.0	Code	FBC2001/ANSI95	(Matrix)							Weight: 174 lb	

LUMBER
TOP CHORD 2 X 4 SYP No.2D
BOT CHORD 2 X 4 SYP No.2D
WEBS 2 X 4 SYP No.3 *Except*
W9 2 X 4 SYP No.2D

BRACING
TOP CHORD Sheathed or 6-0-0 oc purlins, except end verticals.
BOT CHORD Rigid ceiling directly applied or 6-0-0 oc bracing.
WEBS 1 Row at midpt 6-12, 8-9

REACTIONS (lb/size) 2=249/0-4-0, 9=874/0-4-0, 13=1211/0-4-0
Max Horz 2=410(load case 5)
Max Uplift2=-152(load case 5), 9=-272(load case 6), 13=-522(load case 5)
Max Grav 2=261(load case 7), 9=874(load case 1), 13=1211(load case 1)

FORCES (lb) - Maximum Compression/Maximum Tension
TOP CHORD 1-2=0/47, 2-3=-331/212, 3-4=-786/255, 4-5=-677/272, 5-6=-810/477, 6-7=-688/443, 7-8=-440/251, 8-9=-818/450
BOT CHORD 2-13=-130/1, 12-13=-130/1, 11-12=-387/737, 10-11=-172/386, 9-10=-7/21
WEBS 3-12=-424/884, 5-12=-339/400, 6-12=-140/73, 7-11=-299/578, 7-10=-554/328, 8-10=-309/665, 3-13=-1069/699, 6-11=-13/154

NOTES
1) Unbalanced roof live loads have been considered for this design.
2) Wind: ASCE 7-98; 110mph (3-second gust); h=20ft; TCDL=4.2psf; BCDL=3.0psf; Category II; Exp B; enclosed; MWFRS gable end zone and C-C Exterior(2) zone; porch left exposed; Lumber DOL=1.60 plate grip DOL=1.60. This truss is designed for C-C for members and forces, and for MWFRS for reactions specified.
3) Provide adequate drainage to prevent water ponding.
4) Bearing at joint(s) 9 considers parallel to grain value using ANSI/TPI 1 angle to grain formula. Building designer should verify capacity of bearing surface.
5) Provide mechanical connection (by others) of truss to bearing plate capable of withstanding 152 lb uplift at joint 2, 272 lb uplift at joint 9 and 522 lb uplift at joint 13.

LOAD CASE(S) Standard

SEPTEMBER 30, 2005 TRUSS DESIGN ENGINEER:
THOMAS E. MILLER PE 56877, BYRON K. ANDERSON PE 60987
STRUCTURAL ENGINEERING AND INSPECTIONS, INC. EB 9196
16105 N. FLORIDA AVE. STE B, LUTZ, FL 33549

Job	Truss	Truss Type	Qty	Ply	WOODMAN PARK LOT 34 TURKEY RUN
L134662	T14	SPECIAL	1	1	Job Reference (optional)

Dwg.#0930050 43

Builders FirstSource, Lake City, Fl 32055

6.200 s Jul 13 2005 MiTek Industries, Inc. Thu Sep 29 10:18:13 2005 Page 1

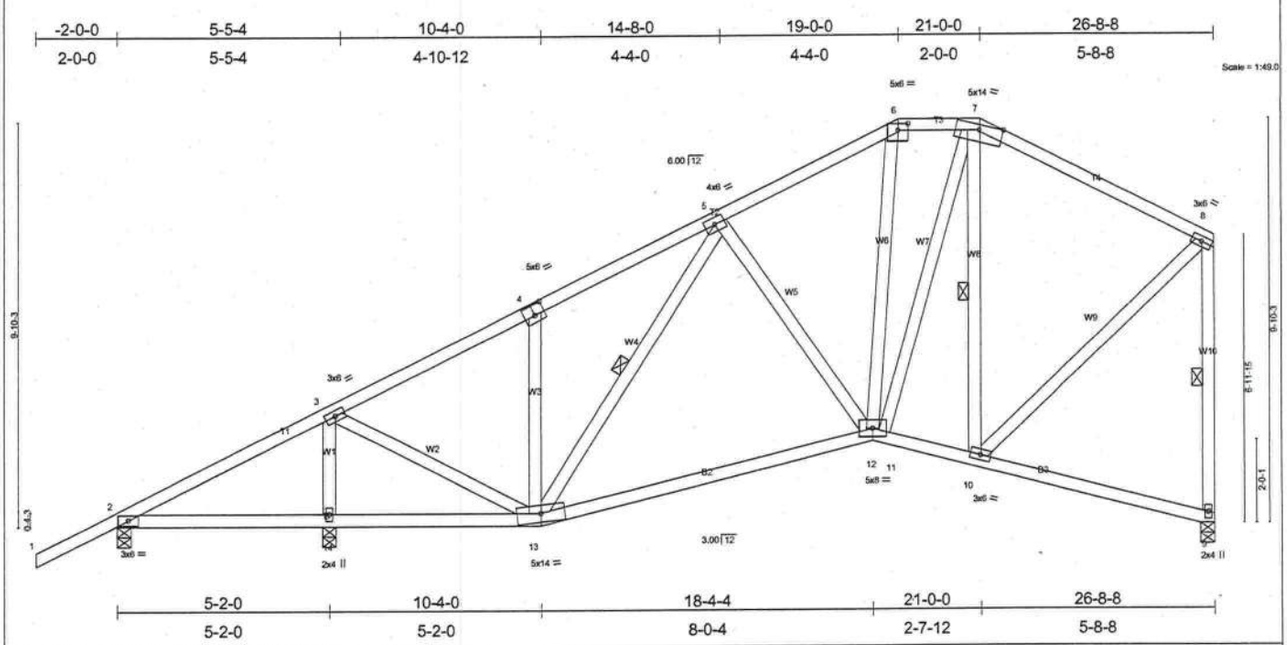

Plate Offsets (X,Y): [4:0-3-0,0-3-0], [6:0-3-0,0-2-0]

LOADING (psf)		SPACING	2-0-0	CSI		DEFL	in	(loc)	l/defl	L/d	PLATES	GRIP
TCLL	20.0	Plates Increase	1.25	TC	0.26	Vert(LL)	-0.13	12-13	>999	240	MT20	244/190
TCDL	7.0	Lumber Increase	1.25	BC	0.40	Vert(TL)	-0.18	12-13	>999	180		
BCLL	10.0	Rep Stress Incr	YES	WB	0.32	Horz(TL)	0.02	9	n/a	n/a		
BCDL	5.0	Code FBC2001/ANSI95		(Matrix)							Weight: 183 lb	

LUMBER
TOP CHORD 2 X 4 SYP No.2D
BOT CHORD 2 X 4 SYP No.2D
WEBS 2 X 4 SYP No.3 *Except*
W10 2 X 4 SYP No.2D

BRACING
TOP CHORD Sheathed or 6-0-0 oc purlins, except end verticals.
BOT CHORD Rigid ceiling directly applied or 6-0-0 oc bracing.
WEBS 1 Row at midpt 5-13, 7-10, 8-9

REACTIONS (lb/size) 2=231/0-4-0, 9=870/0-4-0, 14=1232/0-4-0
Max Horz 2=429(load case 5)
Max Uplift2=-148(load case 5), 9=-251(load case 5), 14=-535(load case 5)
Max Grav 2=236(load case 7), 9=870(load case 1), 14=1232(load case 1)

FORCES (lb) - Maximum Compression/Maximum Tension
TOP CHORD 1-2=0/47, 2-3=-318/246, 3-4=-768/281, 4-5=-753/425, 5-6=-741/468, 6-7=-591/459, 7-8=-580/355, 8-9=-786/487
BOT CHORD 2-14=-158/0, 13-14=-158/0, 12-13=-462/748, 11-12=-250/520, 10-11=-239/491, 9-10=-18/44
WEBS 3-13=-408/889, 4-13=-242/292, 5-13=-142/73, 5-12=-173/235, 6-12=-120/206, 7-11=-234/531, 7-10=-468/306, 8-10=-296/601, 3-14=-1096/713

NOTES
1) Unbalanced roof live loads have been considered for this design.
2) Wind: ASCE 7-98; 110mph (3-second gust); h=20ft; TCDL=4.2psf; BCDL=3.0psf; Category II; Exp B; enclosed; MWFRS gable end zone and C-C Exterior(2) zone; porch left exposed; Lumber DOL=1.60 plate grip DOL=1.60. This truss is designed for C-C for members and forces, and for MWFRS for reactions specified.
3) Provide adequate drainage to prevent water ponding.
4) Bearing at joint(s) 9 considers parallel to grain value using ANSI/TPI 1 angle to grain formula. Building designer should verify capacity of bearing surface.
5) Provide mechanical connection (by others) of truss to bearing plate capable of withstanding 148 lb uplift at joint 2, 251 lb uplift at joint 9 and 535 lb uplift at joint 14.

LOAD CASE(S) Standard

SEPTEMBER 30, 2005 TRUSS DESIGN ENGINEER:
THOMAS E. MILLER PE 56877, BYRON K. ANDERSON PE 60987
STRUCTURAL ENGINEERING AND INSPECTIONS, INC. EB 9196
16105 N. FLORIDA AVE. STE B, LUTZ, FL 33549

Job	Truss	Truss Type	Qty	Ply	WOODMAN PARK LOT 34 TURKEY RUN
L134662	T15	SPECIAL	2	1	Job Reference (optional)

Dwg.#093005044

Builders FirstSource, Lake City, Fl 32055 — 6.200 s Jul 13 2005 MiTek Industries, Inc. Thu Sep 29 10:18:14 2005 Page 1

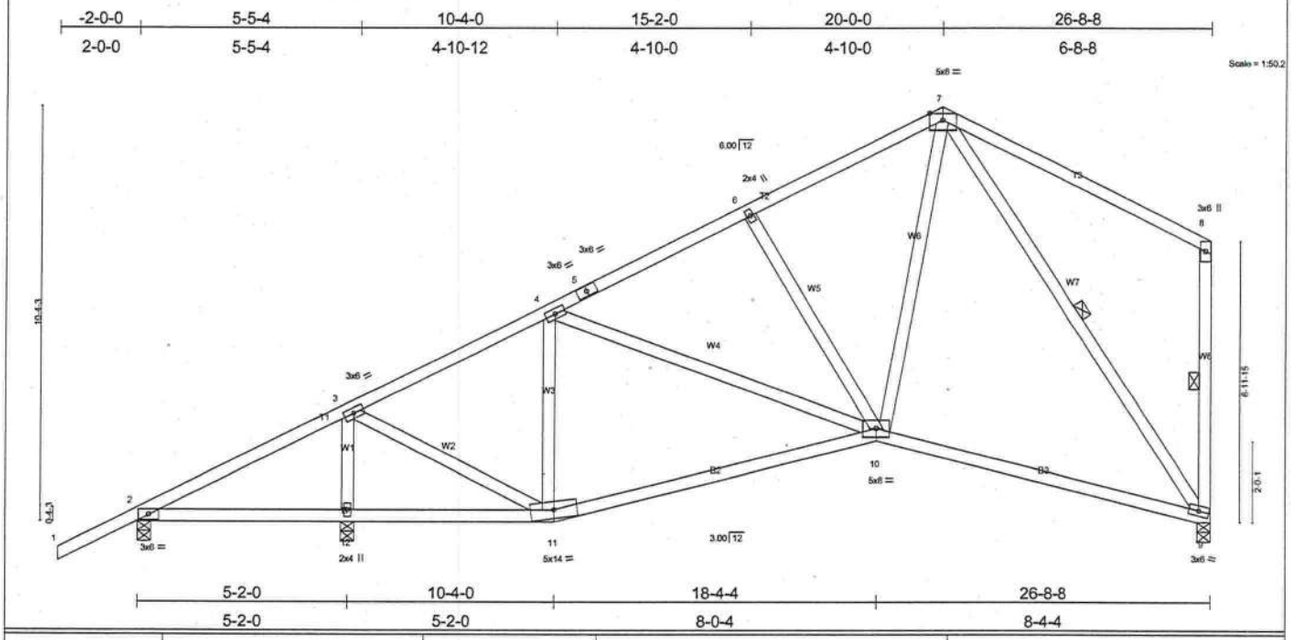

LOADING (psf)		SPACING	2-0-0	CSI		DEFL	in	(loc)	l/defl	L/d	PLATES	GRIP
TCLL	20.0	Plates Increase	1.25	TC	0.35	Vert(LL)	-0.09	9-10	>999	240	MT20	244/190
TCDL	7.0	Lumber Increase	1.25	BC	0.33	Vert(TL)	-0.13	9-10	>999	180		
BCLL	10.0	Rep Stress Incr	YES	WB	0.82	Horz(TL)	0.03	9	n/a	n/a		
BCDL	5.0	Code FBC2001/ANSI95		(Matrix)							Weight: 168 lb	

LUMBER
TOP CHORD 2 X 4 SYP No.2D
BOT CHORD 2 X 4 SYP No.2D
WEBS 2 X 4 SYP No.3 *Except*
W8 2 X 4 SYP No.2D

BRACING
TOP CHORD Sheathed or 6-0-0 oc purlins, except end verticals.
BOT CHORD Rigid ceiling directly applied or 6-0-0 oc bracing.
WEBS 1 Row at midpt 8-9, 7-9

REACTIONS (lb/size) 2=250/0-4-0, 9=875/0-4-0, 12=1210/0-4-0
Max Horz 2=439(load case 5)
Max Uplift2=-152(load case 5), 9=-270(load case 5), 12=-532(load case 5)
Max Grav 2=256(load case 7), 9=875(load case 1), 12=1210(load case 1)

FORCES (lb) - Maximum Compression/Maximum Tension
TOP CHORD 1-2=0/47, 2-3=-290/203, 3-4=-787/310, 4-5=-886/478, 5-6=-825/494, 6-7=-754/496, 7-8=-124/137, 8-9=-198/208
BOT CHORD 2-12=-121/0, 11-12=-121/0, 10-11=-445/689, 9-10=-271/534
WEBS 3-11=-409/863, 4-11=-352/345, 4-10=-30/106, 6-10=-246/255, 7-10=-329/715, 7-9=-821/437, 3-12=-1060/706

NOTES
1) Unbalanced roof live loads have been considered for this design.
2) Wind: ASCE 7-98; 110mph (3-second gust); h=20ft; TCDL=4.2psf; BCDL=3.0psf; Category II; Exp B; enclosed; MWFRS gable end zone and C-C Exterior(2) zone; porch left exposed; Lumber DOL=1.60 plate grip DOL=1.60. This truss is designed for C-C for members and forces, and for MWFRS for reactions specified.
3) Bearing at joint(s) 9 considers parallel to grain value using ANSI/TPI 1 angle to grain formula. Building designer should verify capacity of bearing surface.
4) Provide mechanical connection (by others) of truss to bearing plate capable of withstanding 152 lb uplift at joint 2, 270 lb uplift at joint 9 and 532 lb uplift at joint 12.

LOAD CASE(S) Standard

SEPTEMBER 30, 2005 TRUSS DESIGN ENGINEER:
THOMAS E. MILLER PE 56877, BYRON K. ANDERSON PE 60987
STRUCTURAL ENGINEERING AND INSPECTIONS, INC. EB 9196
16105 N. FLORIDA AVE. STE B, LUTZ, FL 33549

Job	Truss	Truss Type	Qty	Ply	WOODMAN PARK LOT 34 TURKEY RUN
L134662	T15A	SPECIAL	1	1	Job Reference (optional)

Dwg.#093005045

Builders FirstSource, Lake City, Fl 32055

6.200 s Jul 13 2005 MiTek Industries, Inc. Thu Sep 29 10:18:14 2005 Page 1

-2-0-0	5-5-4	10-4-0	15-2-0	20-0-0	26-4-8	32-11-0	40-0-0	42-0-0
2-0-0	5-5-4	4-10-12	4-10-0	4-10-0	6-4-8	6-6-8	7-1-0	2-0-0

Scale = 1:73.0

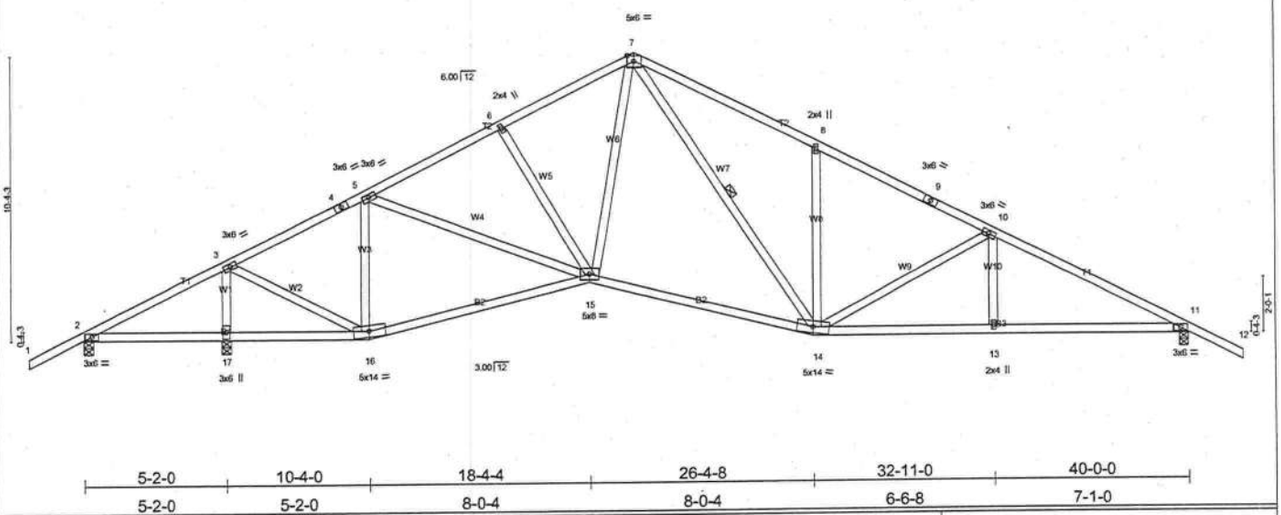

5-2-0	10-4-0	18-4-4	26-4-8	32-11-0	40-0-0
5-2-0	5-2-0	8-0-4	8-0-4	6-6-8	7-1-0

LOADING (psf)		SPACING	2-0-0	CSI		DEFL	in	(loc)	l/defl	L/d	PLATES	GRIP
TCLL	20.0	Plates Increase	1.25	TC	0.40	Vert(LL)	-0.19	14-15	>999	240	MT20	244/190
TCDL	7.0	Lumber Increase	1.25	BC	0.53	Vert(TL)	-0.28	14-15	>999	180		
BCLL	10.0	Rep Stress Incr	YES	WB	0.60	Horz(TL)	0.07	11	n/a	n/a		
BCDL	5.0	Code FBC2001/ANSI95		(Matrix)							Weight: 229 lb	

LUMBER
TOP CHORD 2 X 4 SYP No.2D
BOT CHORD 2 X 4 SYP No.2D
WEBS 2 X 4 SYP No.3

BRACING
TOP CHORD Sheathed or 3-9-11 oc purlins.
BOT CHORD Rigid ceiling directly applied or 6-0-0 oc bracing.
WEBS 1 Row at midpt 7-14

REACTIONS (lb/size) 2=-51/0-4-0, 11=1519/0-4-0, 17=2098/0-4-0
Max Horz 2=-243(load case 6)
Max Uplift2=-182(load case 8), 11=-581(load case 6), 17=-690(load case 5)
Max Grav 2=56(load case 7), 11=1519(load case 1), 17=2098(load case 1)

FORCES (lb) - Maximum Compression/Maximum Tension
TOP CHORD 1-2=0/47, 2-3=-303/838, 3-4=-1117/655, 4-5=-1008/672, 5-6=-1855/1028, 6-7=-1723/1029, 7-8=-1959/1324, 8-9=-1879/1113, 9-10=-1959/1092, 10-11=-2556/1298, 11-12=0/47
BOT CHORD 2-17=-683/412, 16-17=-683/412, 15-16=-288/977, 14-15=-292/1414, 13-14=-957/2199, 11-13=-957/2199
WEBS 3-16=-784/1821, 5-16=-860/480, 5-15=-199/735, 6-15=-242/261, 7-15=-248/757, 7-14=-598/712, 8-14=-353/417, 10-14=-597/404, 10-13=0/211, 3-17=-1939/1042

NOTES
1) Unbalanced roof live loads have been considered for this design.
2) Wind: ASCE 7-98; 110mph (3-second gust); h=20ft; TCDL=4.2psf; BCDL=3.0psf; Category II; Exp B; enclosed; MWFRS gable end zone and C-C Exterior(2) zone; porch left exposed; Lumber DOL=1.60 plate grip DOL=1.60. This truss is designed for C-C for members and forces, and for MWFRS for reactions specified.
3) Provide mechanical connection (by others) of truss to bearing plate capable of withstanding 182 lb uplift at joint 2, 581 lb uplift at joint 11 and 690 lb uplift at joint 17.

LOAD CASE(S) Standard

SEPTEMBER 30, 2005 TRUSS DESIGN ENGINEER:
THOMAS E. MILLER PE 56877, BYRON K. ANDERSON PE 60987
STRUCTURAL ENGINEERING AND INSPECTIONS, INC. EB 9196
16105 N. FLORIDA AVE. STE B, LUTZ, FL 33549

Job	Truss	Truss Type	Qty	Ply	WOODMAN PARK LOT 34 TURKEY RUN
L134662	T16	SPECIAL	1	1	Job Reference (optional)

Dwg.#093005046

6.200 s Jul 13 2005 MiTek Industries, Inc. Thu Sep 29 10:18:15 2005 Page 1

Builders FirstSource, Lake City, Fl 32055

6-6-15	12-4-8	15-0-0	19-7-12	24-3-8	30-0-0
6-6-15	5-9-9	2-7-8	4-7-12	4-7-12	5-8-8

Scale = 1:52.4

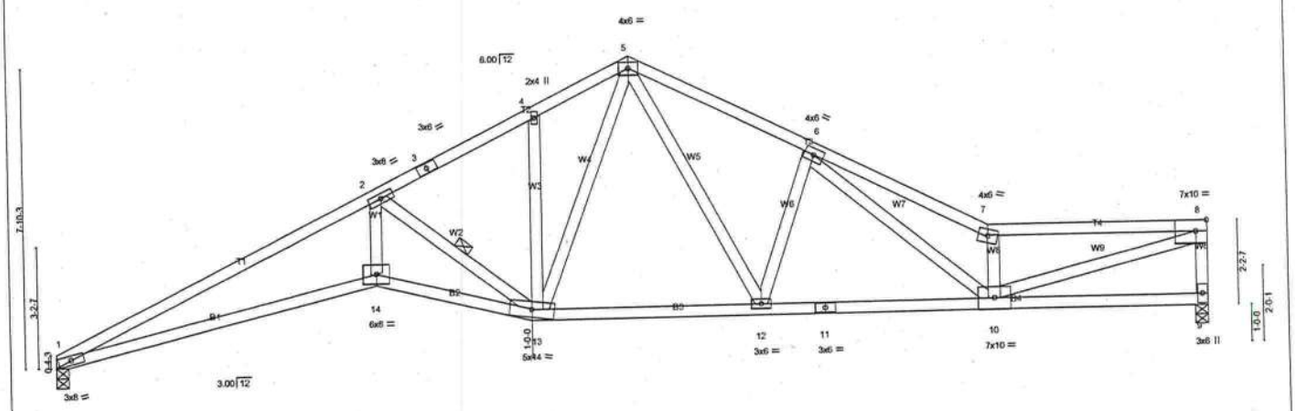

8-4-4	12-4-8	18-4-0	24-3-8	30-0-0
8-4-4	4-0-4	5-11-8	5-11-8	5-8-8

Plate Offsets (X,Y): [8:0-3-8,Edge]

LOADING (psf)		SPACING	2-0-0	CSI		DEFL	in	(loc)	l/defl	L/d	PLATES	GRIP
TCLL	20.0	Plates Increase	1.25	TC	0.97	Vert(LL)	-0.41	1-14	>872	240	MT20	244/190
TCDL	7.0	Lumber Increase	1.25	BC	0.84	Vert(TL)	-0.58	1-14	>617	180		
BCLL	10.0	Rep Stress Incr	YES	WB	0.93	Horz(TL)	0.22	9	n/a	n/a		
BCDL	5.0	Code FBC2001/ANSI95		(Matrix)							Weight: 161 lb	

LUMBER
TOP CHORD 2 X 4 SYP No.2D
BOT CHORD 2 X 4 SYP No.2D *Except*
B1 2 X 4 SYP No.1D
WEBS 2 X 4 SYP No.3

BRACING
TOP CHORD Sheathed, except end verticals.
BOT CHORD Rigid ceiling directly applied or 4-5-4 oc bracing.
WEBS 1 Row at midpt 2-13

REACTIONS (lb/size) 9=1247/0-4-0, 1=1247/0-4-0
Max Horz 1=228(load case 5)
Max Uplift9=-384(load case 6), 1=-374(load case 5)

FORCES (lb) - Maximum Compression/Maximum Tension
TOP CHORD 1-2=-4052/2123, 2-3=-1982/1111, 3-4=-1950/1124, 4-5=-1910/1177, 5-6=-2100/1223, 6-7=-3420/1786, 7-8=-2897/1454, 8-9=-1137/600
BOT CHORD 1-14=-1993/3657, 13-14=-1980/3634, 12-13=-668/1422, 11-12=-1027/2013, 10-11=-1027/2013, 9-10=-77/174
WEBS 2-13=-2286/1374, 4-13=-98/94, 5-13=-466/793, 5-12=-472/889, 6-12=-608/468, 6-10=-672/1357, 7-10=-1741/999, 8-10=-1460/2887, 2-14=-938/1956

NOTES
1) Unbalanced roof live loads have been considered for this design.
2) Wind: ASCE 7-98; 110mph (3-second gust); h=20ft; TCDL=4.2psf; BCDL=3.0psf; Category II; Exp B; enclosed; MWFRS gable end zone and C-C Exterior(2) zone; Lumber DOL=1.60 plate grip DOL=1.60. This truss is designed for C-C for members and forces, and for MWFRS for reactions specified.
3) Provide adequate drainage to prevent water ponding.
4) Bearing at joint(s) 1 considers parallel to grain value using ANSI/TPI 1 angle to grain formula. Building designer should verify capacity of bearing surface.
5) Provide mechanical connection (by others) of truss to bearing plate capable of withstanding 384 lb uplift at joint 9 and 374 lb uplift at joint 1.

LOAD CASE(S) Standard

SEPTEMBER 30, 2005 TRUSS DESIGN ENGINEER:
THOMAS E. MILLER PE 56877, BYRON K. ANDERSON PE 60987
STRUCTURAL ENGINEERING AND INSPECTIONS, INC. EB 9196
16105 N. FLORIDA AVE. STE B, LUTZ, FL 33549

Job	Truss	Truss Type	Qty	Ply	WOODMAN PARK LOT 34 TURKEY RUN
L134662	T17	SPECIAL	1	1	Job Reference (optional)

Dwg.#093005047

Builders FirstSource, Lake City, Fl 32055

6.200 s Jul 13 2005 MiTek Industries, Inc. Thu Sep 29 10:18:16 2005 Page 1

-2-0-0	5-3-8	10-4-0	15-3-8	18-4-4	22-4-8	25-0-0	28-7-12	32-3-8	36-0-0	40-0-0
2-0-0	5-3-8	5-0-8	4-11-8	3-0-12	4-0-4	2-7-8	3-7-12	3-7-12	3-8-8	4-0-0

Scale = 1:74.2

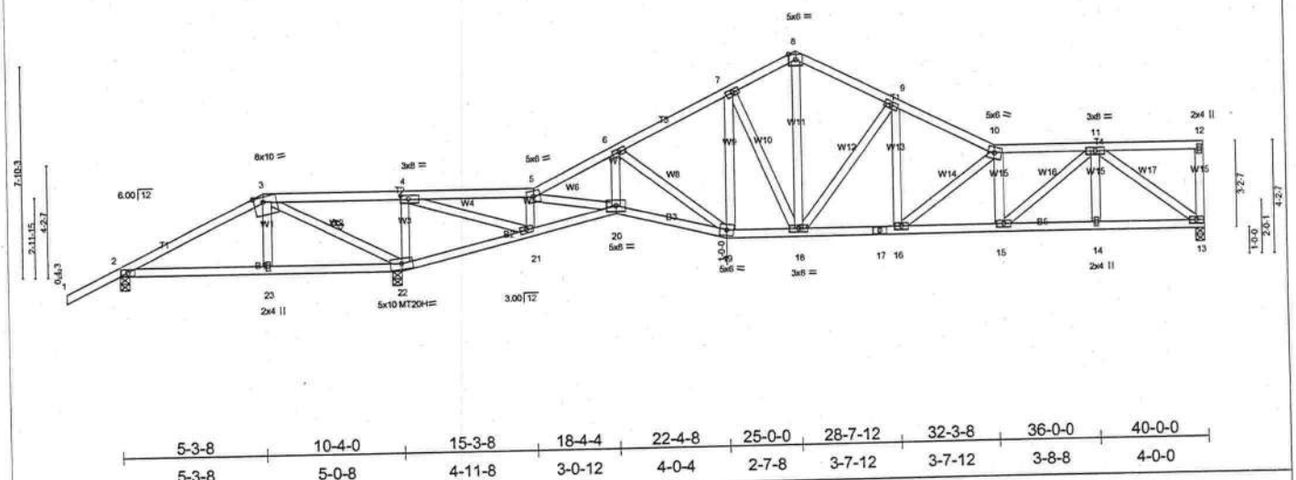

5-3-8	10-4-0	15-3-8	18-4-4	22-4-8	25-0-0	28-7-12	32-3-8	36-0-0	40-0-0
5-3-8	5-0-8	4-11-8	3-0-12	4-0-4	2-7-8	3-7-12	3-7-12	3-8-8	4-0-0

Plate Offsets (X,Y): [3:0-4-3,Edge], [4:0-3-8,0-1-8]

LOADING (psf)		SPACING	2-0-0	CSI		DEFL	in	(loc)	l/defl	L/d	PLATES	GRIP
TCLL	20.0	Plates Increase	1.25	TC	0.56	Vert(LL)	-0.12	16-18	>999	240	MT20	244/190
TCDL	7.0	Lumber Increase	1.25	BC	0.37	Vert(TL)	-0.17	16-18	>999	180	MT20H	187/143
BCLL	10.0	Rep Stress Incr	NO	WB	0.68	Horz(TL)	0.06	13	n/a	n/a		
BCDL	5.0	Code	FBC2001/ANSI95	(Matrix)							Weight: 237 lb	

LUMBER
TOP CHORD 2 X 4 SYP No.2D *Except*
T2 2 X 4 SYP No.1D
BOT CHORD 2 X 4 SYP No.2D *Except*
B1 2 X 4 SYP No.1D
WEBS 2 X 4 SYP No.3

BRACING
TOP CHORD Sheathed or 4-8-15 oc purlins, except end verticals.
BOT CHORD Rigid ceiling directly applied or 4-2-12 oc bracing.
WEBS 1 Row at midpt 3-22

REACTIONS (lb/size) 13=1034/0-4-0, 2=171/0-4-0, 22=2842/0-4-0
Max Horz 2=315(load case 4)
Max Uplift13=-339(load case 5), 2=-314(load case 4), 22=-1142(load case 4)
Max Grav 13=1034(load case 1), 2=266(load case 6), 22=2842(load case 1)

FORCES (lb) - Maximum Compression/Maximum Tension
TOP CHORD 1-2=0/47, 2-3=0/381, 3-4=-718/2123, 4-5=-122/118, 5-6=-1494/394, 6-7=-1188/354, 7-8=-1085/387, 8-9=-1101/366, 9-10=-1557/472, 10-11=-1860/572, 11-12=-36/13, 12-13=-103/68
BOT CHORD 2-23=-337/0, 22-23=-349/0, 21-22=-2153/586, 20-21=-66/120, 19-20=-461/1362, 18-19=-288/1017, 17-18=-377/1357, 16-17=-377/1357, 15-16=-581/1882, 14-15=-379/1185, 13-14=-379/1185
WEBS 3-23=-238/485, 3-22=-2125/995, 4-22=-1083/500, 4-21=-604/2119, 5-21=-1092/377, 5-20=-406/1279, 6-20=-15/185, 6-19=-386/201, 7-19=-11/78, 7-18=-241/153, 8-18=-238/776, 9-18=-674/300, 9-16=-137/533, 10-16=-671/260, 10-15=-447/179, 11-15=-248/872, 11-14=0/113, 11-13=-1439/459

NOTES
1) Unbalanced roof live loads have been considered for this design.
2) Wind: ASCE 7-98; 110mph (3-second gust); h=20ft; TCDL=4.2psf; BCDL=3.0psf; Category II; Exp B; enclosed; MWFRS gable end zone; porch left exposed; Lumber DOL=1.60 plate grip DOL=1.60.
3) Provide adequate drainage to prevent water ponding.
4) All plates are MT20 plates unless otherwise indicated.
5) All plates are 3x6 MT20 unless otherwise indicated.
6) Provide mechanical connection (by others) of truss to bearing plate capable of withstanding 339 lb uplift at joint 13, 314 lb uplift at joint 2 and 1142 lb uplift at joint 22.
7) Girder carries hip end with 29-8-0 right side setback, 5-3-8 left side setback, and 5-3-8 end setback.
8) Hanger(s) or other connection device(s) shall be provided sufficient to support concentrated load(s) 281 lb down and 145 lb up at 5-3-8 on bottom chord. The design/selection of such connection device(s) is the responsibility of others.
9) In the LOAD CASE(S) section, loads applied to the face of the truss are noted as front (F) or back (B).

LOAD CASE(S) Standard
1) Regular: Lumber Increase=1.25, Plate Increase=1.25
Uniform Loads (plf)
Vert: 1-3=-54, 3-4=-94(F=-40), 4-5=-54, 5-8=-54, 8-10=-54, 10-12=-54, 2-23=-30, 22-23=-52(F=-22), 20-22=-30, 19-20=-30, 13-19=-30
Concentrated Loads (lb)
Vert: 23=-281(F)

SEPTEMBER 30, 2005 TRUSS DESIGN ENGINEER:
THOMAS E. MILLER PE 56877, BYRON K. ANDERSON PE 60987
STRUCTURAL ENGINEERING AND INSPECTIONS, INC. EB 9196
16105 N. FLORIDA AVE. STE B, LUTZ, FL 33549

Job	Truss	Truss Type	Qty	Ply	WOODMAN PARK LOT 34 TURKEY RUN
L134662	T18	SPECIAL	1	1	Job Reference (optional)

Dwg.#093005048

Builders FirstSource, Lake City, Fl 32055

6.200 s Jul 13 2005 MiTek Industries, Inc. Thu Sep 29 10:18:17 2005 Page 1

-2-0-0	7-3-8	10-4-0	17-3-8	18-4-4	22-4-8	25-0-0	28-1-4	33-10-0	40-0-0
2-0-0	7-3-8	3-0-8	6-11-8	1-0-12	4-0-4	2-7-8	3-1-4	5-8-12	6-2-0

Scale = 1:74.2

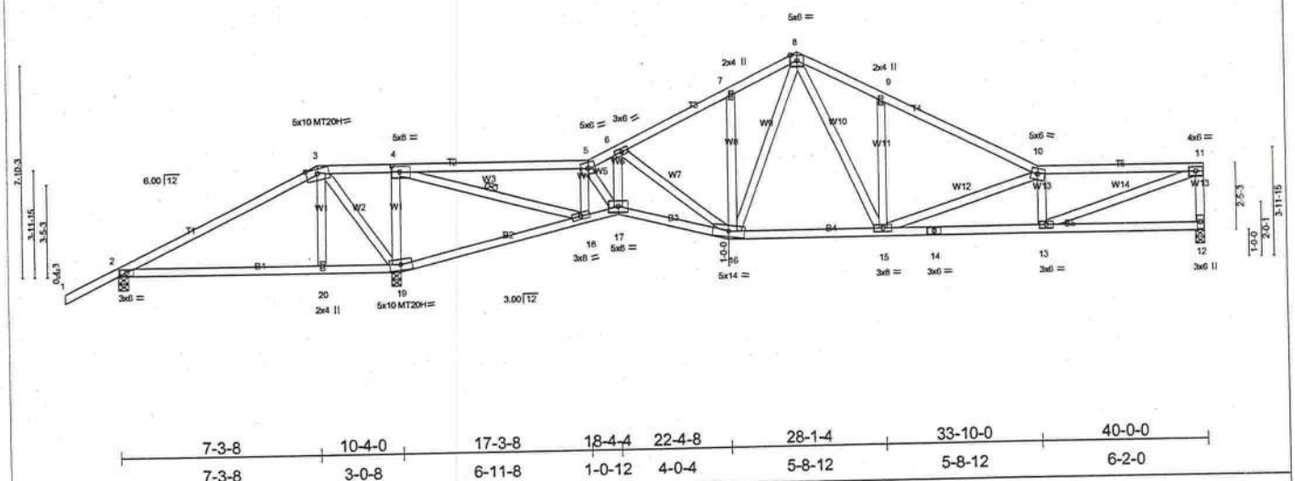

7-3-8	10-4-0	17-3-8	18-4-4	22-4-8	28-1-4	33-10-0	40-0-0
7-3-8	3-0-8	6-11-8	1-0-12	4-0-4	5-8-12	5-8-12	6-2-0

Plate Offsets (X,Y): [4:0-3-8,0-2-8]

LOADING (psf)		SPACING	2-0-0	CSI		DEFL	in	(loc)	l/defl	L/d	PLATES	GRIP
TCLL	20.0	Plates Increase	1.25	TC	0.68	Vert(LL)	-0.17	13-15	>999	240	MT20	244/190
TCDL	7.0	Lumber Increase	1.25	BC	0.47	Vert(TL)	0.12	2-20	>984	180	MT20H	187/143
BCLL	10.0	Rep Stress Incr	YES	WB	0.80	Horz(TL)	0.03	12	n/a	n/a		
BCDL	5.0	Code FBC2001/ANSI95		(Matrix)							Weight: 227 lb	

LUMBER
TOP CHORD 2 X 4 SYP No.2D
BOT CHORD 2 X 4 SYP No.2D
WEBS 2 X 4 SYP No.3

BRACING
TOP CHORD Sheathed or 4-5-0 oc purlins, except end verticals.
BOT CHORD Rigid ceiling directly applied or 4-3-12 oc bracing.
WEBS 1 Row at midpt 4-18

REACTIONS (lb/size) 12=971/0-4-0, 2=-225/0-4-0, 19=2705/0-4-0
Max Horz 2=295(load case 5)
Max Uplift12=-320(load case 6), 2=-291(load case 8), 19=-1018(load case 5)

FORCES (lb) - Maximum Compression/Maximum Tension
TOP CHORD 1-2=0/47, 2-3=-574/1427, 3-4=-1027/2059, 4-5=-350/95, 5-6=-825/403, 6-7=-964/525, 7-8=-952/641, 8-9=-1352/851, 9-10=-1372/696, 10-11=-2062/992, 11-12=-868/448
BOT CHORD 2-20=-1184/419, 19-20=-1177/409, 18-19=-2188/1118, 17-18=-164/421, 16-17=-295/708, 15-16=-304/786, 14-15=-1019/2099, 13-14=-1019/2099, 12-13=-50/134
WEBS 3-20=-256/180, 3-19=-1385/1022, 4-19=-966/481, 4-18=-1186/2499, 5-18=-1141/678, 5-17=-321/546, 6-17=-261/168, 6-16=-96/237, 7-16=-203/237, 8-16=-123/209, 8-15=-526/882, 9-15=-266/322, 10-15=-997/522, 10-13=-551/397, 11-13=-1003/2051

NOTES
1) Unbalanced roof live loads have been considered for this design.
2) Wind: ASCE 7-98; 110mph (3-second gust); h=20ft; TCDL=4.2psf; BCDL=3.0psf; Category II; Exp B; enclosed; MWFRS gable end zone and C-C Exterior(2) zone; porch left exposed; Lumber DOL=1.60 plate grip DOL=1.60. This truss is designed for C-C for members and forces, and for MWFRS for reactions specified.
3) Provide adequate drainage to prevent water ponding.
4) All plates are MT20 plates unless otherwise indicated.
5) Provide mechanical connection (by others) of truss to bearing plate capable of withstanding 320 lb uplift at joint 12, 291 lb uplift at joint 2 and 1018 lb uplift at joint 19.

LOAD CASE(S) Standard

SEPTEMBER 30, 2005 TRUSS DESIGN ENGINEER:
THOMAS E. MILLER PE 56877, BYRON K. ANDERSON PE 60987
STRUCTURAL ENGINEERING AND INSPECTIONS, INC. EB 9196
16105 N. FLORIDA AVE. STE B, LUTZ, FL 33549

Job	Truss	Truss Type	Qty	Ply	WOODMAN PARK LOT 34 TURKEY RUN
L134662	T19	SPECIAL	1	1	Job Reference (optional)

Dwg.#093005049

6.200 s Jul 13 2005 MiTek Industries, Inc. Thu Sep 29 10:18:18 2005 Page 1

Builders FirstSource, Lake City, Fl 32055

-2-0-0	4-11-0	9-3-8	14-3-8	19-3-8	25-0-0	26-4-8	32-11-0	40-0-0
2-0-0	4-11-0	4-4-8	5-0-0	5-0-0	5-8-8	1-4-8	6-6-8	7-1-0

Scale = 1:72.4

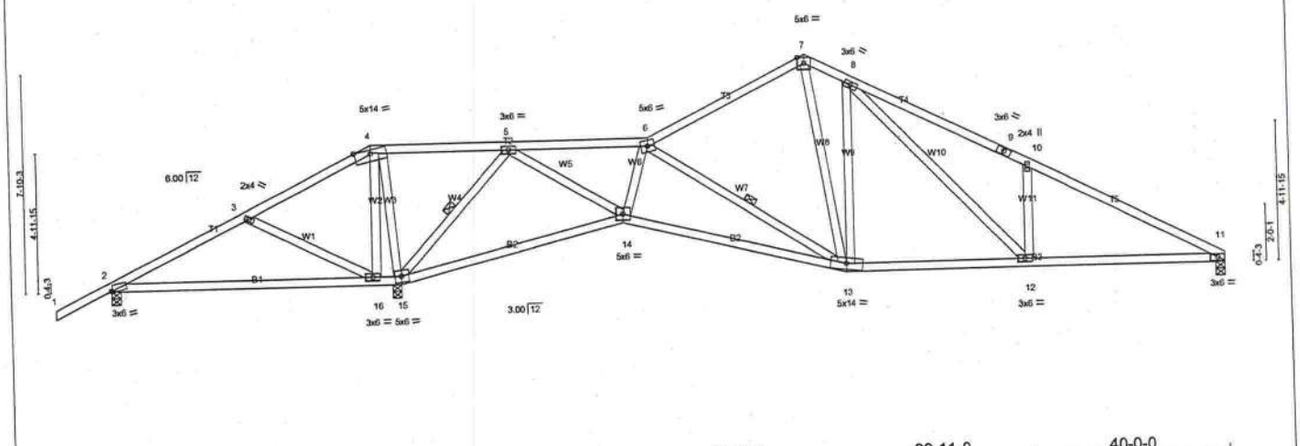

9-3-8	10-4-0	18-4-4	26-4-8	32-11-0	40-0-0
9-3-8	1-0-8	8-0-4	8-0-4	6-6-8	7-1-0

Plate Offsets (X,Y): [2:0-0-10,Edge]

LOADING (psf)		SPACING	2-0-0	CSI		DEFL	in	(loc)	l/defl	L/d	PLATES	GRIP
TCLL	20.0	Plates Increase	1.25	TC	0.45	Vert(LL)	0.23	2-16	>522	240	MT20	244/190
TCDL	7.0	Lumber Increase	1.25	BC	0.50	Vert(TL)	0.20	2-16	>616	180		
BCLL	10.0	Rep Stress Incr	YES	WB	0.90	Horz(TL)	0.04	11	n/a	n/a		
BCDL	5.0	Code	FBC2001/ANSI95	(Matrix)							Weight: 220 lb	

LUMBER
TOP CHORD 2 X 4 SYP No.2D
BOT CHORD 2 X 4 SYP No.2D
WEBS 2 X 4 SYP No.3

BRACING
TOP CHORD Sheathed or 4-7-13 oc purlins.
BOT CHORD Rigid ceiling directly applied or 5-4-6 oc bracing.
WEBS 1 Row at midpt 5-15, 6-13

REACTIONS (lb/size) 2=-153/0-4-0, 15=2608/0-4-0, 11=994/0-4-0
Max Horz 2=212(load case 5)
Max Uplift2=-240(load case 8), 15=-969(load case 5), 11=-335(load case 6)

FORCES (lb) - Maximum Compression/Maximum Tension
TOP CHORD 1-2=0/47, 2-3=-296/1131, 3-4=-500/1441, 4-5=-589/1499, 5-6=-826/417, 6-7=-925/605, 7-8=-987/741, 8-9=-1636/1117, 9-10=-1723/1095, 10-11=-1721/885
BOT CHORD 2-16=-934/313, 15-16=-1231/633, 14-15=-571/429, 13-14=-294/1046, 12-13=-260/887, 11-12=-677/1463
WEBS 3-16=-345/380, 4-16=-613/342, 4-15=-1241/1066, 5-15=-1511/702, 5-14=-661/1613, 6-14=-547/467, 6-13=-344/156, 7-13=-404/637, 8-13=-550/444, 8-12=-608/842, 10-12=-384/458

NOTES
1) Unbalanced roof live loads have been considered for this design.
2) Wind: ASCE 7-98; 110mph (3-second gust); h=20ft; TCDL=4.2psf; BCDL=3.0psf; Category II; Exp B; enclosed; MWFRS gable end zone and C-C Exterior(2) zone; porch left exposed; Lumber DOL=1.60 plate grip DOL=1.60. This truss is designed for C-C for members and forces, and for MWFRS for reactions specified.
3) Provide adequate drainage to prevent water ponding.
4) Provide mechanical connection (by others) of truss to bearing plate capable of withstanding 240 lb uplift at joint 2, 969 lb uplift at joint 15 and 335 lb uplift at joint 11.

LOAD CASE(S) Standard

SEPTEMBER 30, 2005 TRUSS DESIGN ENGINEER:
THOMAS E. MILLER PE 56877, BYRON K. ANDERSON PE 60987
STRUCTURAL ENGINEERING AND INSPECTIONS, INC. EB 9196
16105 N. FLORIDA AVE. STE B, LUTZ, FL 33549

Job	Truss	Truss Type	Qty	Ply	WOODMAN PARK LOT 34 TURKEY RUN	Dwg.#093005050
L134662	T20	SPECIAL	1	1	Job Reference (optional)	

6.200 s Jul 13 2005 MiTek Industries, Inc. Thu Sep 29 10:18:19 2005 Page 1

Builders FirstSource, Lake City, Fl 32055

-2-0-0	5-11-0	11-3-8	16-3-8	21-3-8	22-4-8	25-0-0	30-7-0	36-2-0	37-8-0	40-0-0
2-0-0	5-11-0	5-4-8	5-0-0	5-0-0	1-1-0	2-7-8	5-7-0	5-7-0	1-6-0	2-4-0

Scale = 1:72.4

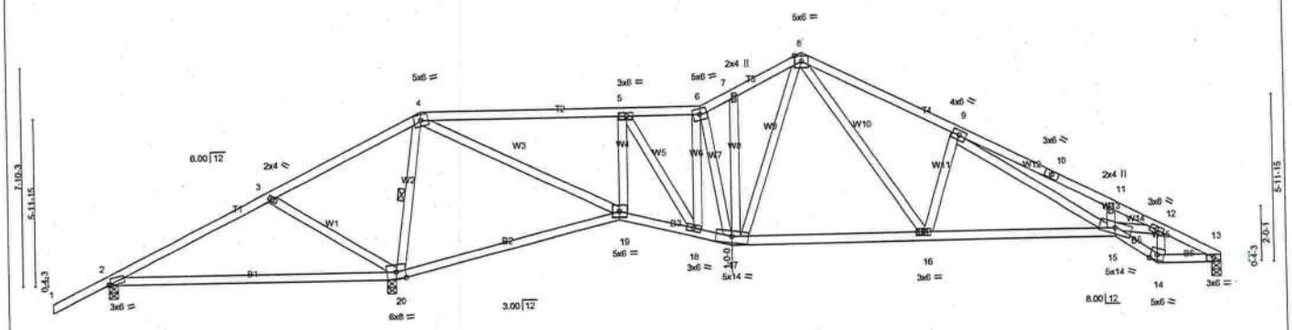

10-4-0	18-4-4	21-3-8	22-4-8	29-3-4	36-2-0	37-8-0	40-0-0
10-4-0	8-0-4	2-11-4	1-1-0	6-10-12	6-10-12	1-6-0	2-4-0

Plate Offsets (X,Y): [2:0-1-1,0-0-7]

LOADING (psf)		SPACING	2-0-0	CSI		DEFL	in	(loc)	l/defl	L/d	PLATES	GRIP
TCLL	20.0	Plates Increase	1.25	TC	0.61	Vert(LL)	0.46	2-20	>270	240	MT20	244/190
TCDL	7.0	Lumber Increase	1.25	BC	0.51	Vert(TL)	0.40	2-20	>307	180		
BCLL	10.0	Rep Stress Incr	YES	WB	0.80	Horz(TL)	0.09	13	n/a	n/a		
BCDL	5.0	Code	FBC2001/ANSI95	(Matrix)							Weight: 231 lb	

LUMBER
TOP CHORD 2 X 4 SYP No.2D
BOT CHORD 2 X 4 SYP No.2D
WEBS 2 X 4 SYP No.3

BRACING
TOP CHORD Sheathed or 3-3-5 oc purlins.
BOT CHORD Rigid ceiling directly applied or 5-4-7 oc bracing.
WEBS 1 Row at midpt 4-20

REACTIONS (lb/size) 2=-202/0-4-0, 20=2686/0-4-0, 13=966/0-4-0
Max Horz 2=213(load case 5)
Max Uplift2=-321(load case 8), 20=-977(load case 5), 13=-318(load case 6)

FORCES (lb) - Maximum Compression/Maximum Tension
TOP CHORD 1-2=0/47, 2-3=-460/1338, 3-4=-673/1667, 4-5=-505/222, 5-6=-755/460, 6-7=-878/532, 7-8=-891/585, 8-9=-1539/910, 9-10=-3241/1736, 10-11=-3279/1723, 11-12=-3265/1606, 12-13=-1836/933
BOT CHORD 2-20=-1108/465, 19-20=-1218/754, 18-19=-76/540, 17-18=-169/777, 16-17=-141/783, 15-16=-578/1469, 14-15=-815/1712, 13-14=-771/1574
WEBS 3-20=-376/448, 4-20=-1924/895, 4-19=-685/1825, 5-19=-823/641, 5-18=-461/552, 6-18=-467/238, 6-17=-22/193, 7-17=-141/104, 8-17=-141/223, 8-16=-538/949, 9-16=-563/492, 9-15=-942/1736, 11-15=-154/243, 12-15=-634/1432, 12-14=-783/368

NOTES
1) Unbalanced roof live loads have been considered for this design.
2) Wind: ASCE 7-98; 110mph (3-second gust); h=20ft; TCDL=4.2psf; BCDL=3.0psf; Category II; Exp B; enclosed; MWFRS gable end zone and C-C Exterior(2) zone; porch left exposed; Lumber DOL=1.60 plate grip DOL=1.60. This truss is designed for C-C for members and forces, and for MWFRS for reactions specified.
3) Provide adequate drainage to prevent water ponding.
4) Provide mechanical connection (by others) of truss to bearing plate capable of withstanding 321 lb uplift at joint 2, 977 lb uplift at joint 20 and 318 lb uplift at joint 13.

LOAD CASE(S) Standard

SEPTEMBER 30, 2005 TRUSS DESIGN ENGINEER:
THOMAS E. MILLER PE 56877, BYRON K. ANDERSON PE 60987
STRUCTURAL ENGINEERING AND INSPECTIONS, INC. EB 9196
16105 N. FLORIDA AVE. STE B, LUTZ, FL 33549

Job	Truss	Truss Type	Qty	Ply	WOODMAN PARK LOT 34 TURKEY RUN
L134662	T21	SPECIAL	1	1	Job Reference (optional)

Dwg.#093005051

Builders FirstSource, Lake City, Fl 32055

6.200 s Jul 13 2005 MiTek Industries, Inc. Thu Sep 29 10:18:20 2005 Page 1

-2-0-0	5-5-4	10-4-0	13-3-8	18-4-4	23-3-8	25-0-0	30-7-0	36-2-0	37-8-0	40-0-0	42-0-0
2-0-0	5-5-4	4-10-12	2-11-8	5-0-12	4-11-4	1-8-8	5-7-0	5-7-0	1-6-0	2-4-0	2-0-0

Scale = 1:74.5

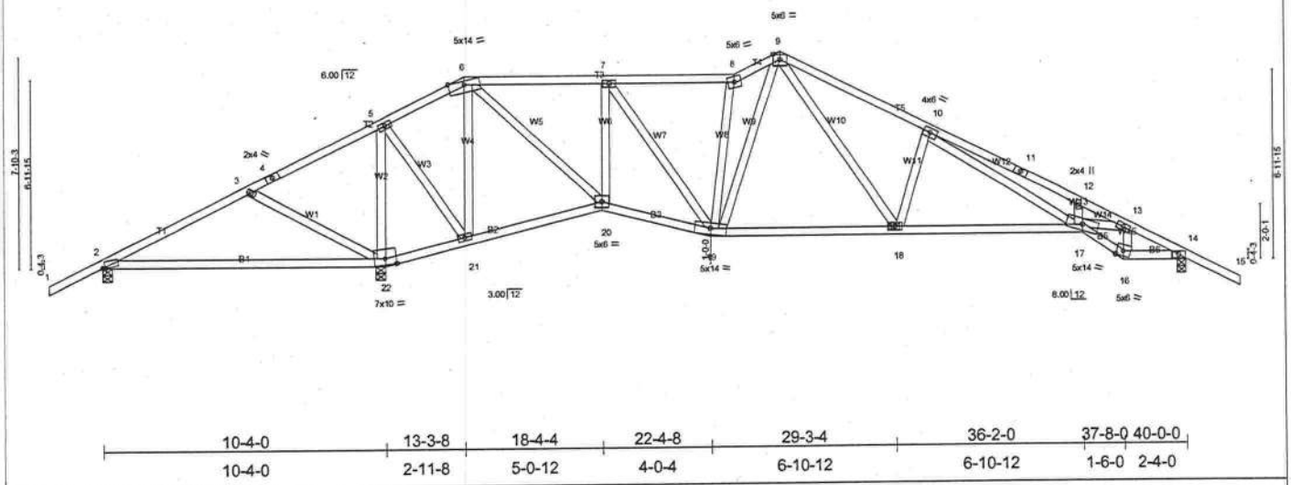

10-4-0	13-3-8	18-4-4	22-4-8	29-3-4	36-2-0	37-8-0	40-0-0
10-4-0	2-11-8	5-0-12	4-0-4	6-10-12	6-10-12	1-6-0	2-4-0

Plate Offsets (X,Y): [2:0-1-1,0-0-7]

LOADING (psf)		SPACING	2-0-0	CSI		DEFL	in	(loc)	l/defl	L/d	PLATES	GRIP
TCLL	20.0	Plates Increase	1.25	TC	0.53	Vert(LL)	0.35	2-22	>344	240	MT20	244/190
TCDL	7.0	Lumber Increase	1.25	BC	0.53	Vert(TL)	0.30	2-22	>403	180		
BCLL	10.0	Rep Stress Incr	YES	WB	0.85	Horz(TL)	0.10	14	n/a	n/a		
BCDL	5.0	Code	FBC2001/ANSI95	(Matrix)							Weight: 239 lb	

LUMBER
TOP CHORD 2 X 4 SYP No.2D
BOT CHORD 2 X 4 SYP No.2D
WEBS 2 X 4 SYP No.3

BRACING
TOP CHORD Sheathed or 3-3-2 oc purlins.
BOT CHORD Rigid ceiling directly applied or 4-11-6 oc bracing.

REACTIONS (lb/size) 2=-133/0-4-0, 22=2577/0-4-0, 14=1123/0-4-0
Max Horz 2=194(load case 5)
Max Uplift2=-276(load case 8), 22=-943(load case 5), 14=-462(load case 6)
Max Grav 2=32(load case 7), 22=2577((load case 1), 14=1123(load case 1)

FORCES (lb) - Maximum Compression/Maximum Tension
TOP CHORD 1-2=0/47, 2-3=-282/1137, 3-4=-513/1376, 4-5=-502/1483, 5-6=-119/553, 6-7=-512/310, 7-8=-817/513, 8-9=-1009/638, 9-10=-1614/908, 10-11=-3272/1566, 11-12=-3311/1553, 12-13=-3292/1426, 13-14=-1783/765, 14-15=0/47
BOT CHORD 2-22=-931/381, 21-22=-1404/838, 20-21=-518/555, 19-20=-70/541, 18-19=-103/854, 17-18=-490/1535, 16-17=-543/1643, 14-16=-520/1512
WEBS 3-22=-397/435, 5-22=-1773/709, 5-21=-433/1459, 6-21=-1353/563, 6-20=-515/1351, 7-20=-756/515, 7-19=-360/554, 8-19=-568/356, 9-19=-153/339, 9-18=-500/943, 10-18=-554/463, 10-17=-768/1690, 12-17=-166/266, 13-17=-646/1523, 13-16=-791/308

NOTES
1) Unbalanced roof live loads have been considered for this design.
2) Wind: ASCE 7-98; 110mph (3-second gust); h=20ft; TCDL=4.2psf; BCDL=3.0psf; Category II; Exp B; enclosed; MWFRS gable end zone and C-C Exterior(2) zone; porch left exposed; Lumber DOL=1.60 plate grip DOL=1.60. This truss is designed for C-C for members and forces, and for MWFRS for reactions specified.
3) Provide adequate drainage to prevent water ponding.
4) All plates are 3x6 MT20 unless otherwise indicated.
5) Provide mechanical connection (by others) of truss to bearing plate capable of withstanding 276 lb uplift at joint 2, 943 lb uplift at joint 22 and 462 lb uplift at joint 14.

LOAD CASE(S) Standard

SEPTEMBER 30, 2005 TRUSS DESIGN ENGINEER:
THOMAS E. MILLER PE 56877, BYRON K. ANDERSON PE 60987
STRUCTURAL ENGINEERING AND INSPECTIONS, INC. EB 9196
16105 N. FLORIDA AVE. STE B, LUTZ, FL 33549

Job	Truss	Truss Type	Qty	Ply	WOODMAN PARK LOT 34 TURKEY RUN
L134662	T22	SPECIAL	1	1	Job Reference (optional)

Dwg.#093005052

Builders FirstSource, Lake City, Fl 32055 — 6.200 s Jul 13 2005 MiTek Industries, Inc. Thu Sep 29 10:18:21 2005 Page 1

-2-0-0	5-5-4	10-4-0	15-3-8	22-4-8	24-8-8	30-5-4	36-2-0	37-8-0	40-0-0	42-0-0
2-0-0	5-5-4	4-10-12	4-11-8	7-1-0	2-4-0	5-8-12	5-8-12	1-6-0	2-4-0	2-0-0

Scale = 1:73.7

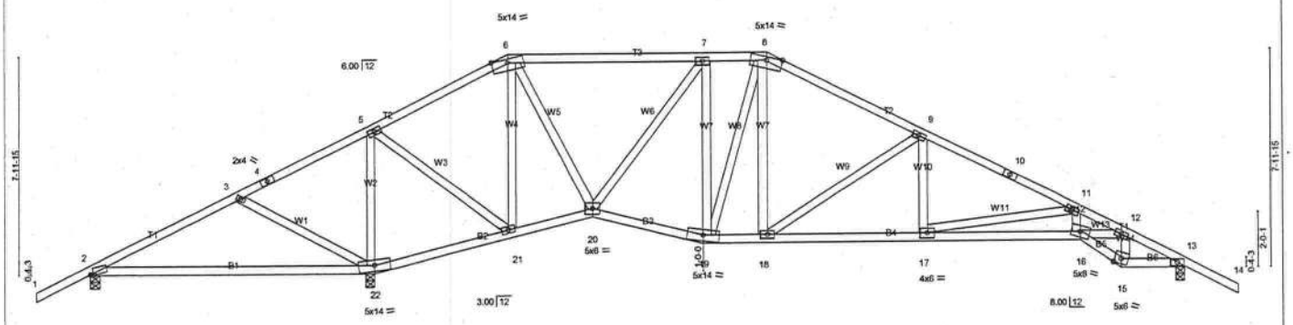

10-4-0	15-3-8	18-4-4	22-4-8	24-8-8	30-5-4	36-2-0	37-8-0	40-0-0
10-4-0	4-11-8	3-0-12	4-0-4	2-4-0	5-8-12	5-8-12	1-6-0	2-4-0

Plate Offsets (X,Y): [2:0-1-5,0-0-7]

LOADING (psf)		SPACING 2-0-0		CSI		DEFL	in	(loc)	l/defl	L/d	PLATES	GRIP
TCLL	20.0	Plates Increase	1.25	TC	0.49	Vert(LL)	0.39	2-22	>314	240	MT20	244/190
TCDL	7.0	Lumber Increase	1.25	BC	0.72	Vert(TL)	0.33	2-22	>364	180		
BCLL	10.0	Rep Stress Incr	YES	WB	0.83	Horz(TL)	0.11	13	n/a	n/a		
BCDL	5.0	Code FBC2001/ANSI95		(Matrix)							Weight: 242 lb	

LUMBER
TOP CHORD 2 X 4 SYP No.2D
BOT CHORD 2 X 4 SYP No.2D
WEBS 2 X 4 SYP No.3

BRACING
TOP CHORD Sheathed or 3-4-10 oc purlins.
BOT CHORD Rigid ceiling directly applied or 5-4-8 oc bracing.

REACTIONS (lb/size) 2=-48/0-4-0, 22=2462/0-4-0, 13=1152/0-4-0
Max Horz 2=197(load case 5)
Max Uplift2=-304(load case 8), 22=-723(load case 5), 13=-470(load case 6)
Max Grav 2=109(load case 7), 22=2462(load case 1), 13=1152(load case 1)

FORCES (lb) - Maximum Compression/Maximum Tension
TOP CHORD 1-2=0/47, 2-3=-204/1048, 3-4=-430/1191, 4-5=-413/1298, 5-6=-205/133, 6-7=-458/315, 7-8=-803/546, 8-9=-1074/592, 9-10=-1807/881, 10-11=-1853/870, 11-12=-3556/1532, 12-13=-1832/774, 13-14=0/47
BOT CHORD 2-22=-893/312, 21-22=-1230/750, 20-21=-4/353, 19-20=-118/846, 18-19=-83/903, 17-18=-510/1622, 16-17=-1196/3056, 15-16=-562/1711, 13-15=-525/1549
WEBS 3-22=-388/425, 5-22=-1707/746, 5-21=-462/1508, 6-21=-1129/482, 6-20=-287/914, 7-20=-604/396, 7-19=-162/176, 8-19=-302/173, 8-18=-255/586, 9-18=-873/525, 9-17=-102/483, 11-17=-1458/698, 11-16=-201/855, 12-16=-746/1747, 12-15=-881/347

NOTES
1) Unbalanced roof live loads have been considered for this design.
2) Wind: ASCE 7-98; 110mph (3-second gust); h=20ft; TCDL=4.2psf; BCDL=3.0psf; Category II; Exp B; enclosed; MWFRS gable end zone and C-C Exterior(2) zone; porch left exposed; Lumber DOL=1.60 plate grip DOL=1.60. This truss is designed for C-C for members and forces, and for MWFRS for reactions specified.
3) Provide adequate drainage to prevent water ponding.
4) All plates are 3x6 MT20 unless otherwise indicated.
5) Provide mechanical connection (by others) of truss to bearing plate capable of withstanding 304 lb uplift at joint 2, 723 lb uplift at joint 22 and 470 lb uplift at joint 13.

LOAD CASE(S) Standard

SEPTEMBER 30, 2005 TRUSS DESIGN ENGINEER:
THOMAS E. MILLER PE 56877, BYRON K. ANDERSON PE 60987
STRUCTURAL ENGINEERING AND INSPECTIONS, INC. EB 9196
16105 N. FLORIDA AVE. STE B, LUTZ, FL 33549

Job	Truss	Truss Type	Qty	Ply	WOODMAN PARK LOT 34 TURKEY RUN
L134662	T23	SPECIAL	1	1	Job Reference (optional)

Dwg.#0930050 53

Builders FirstSource, Lake City, Fl 32055

6.200 s Jul 13 2005 MiTek Industries, Inc. Thu Sep 29 10:18:21 2005 Page 1

-2-0-0	5-5-4	10-4-0	17-3-8	22-8-8	29-5-4	36-2-0	37-8-0	40-0-0	42-0-0
2-0-0	5-5-4	4-10-12	6-11-8	5-5-0	6-8-12	6-8-12	1-6-0	2-4-0	2-0-0

Scale = 1:73.7

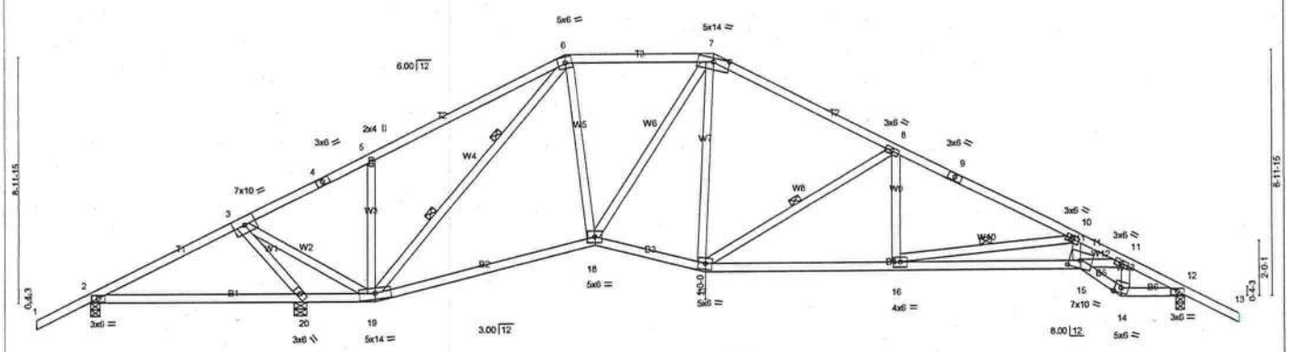

7-7-1	10-4-0	17-3-8	18-4-4	22-4-8	29-5-4	36-2-0	37-8-0	40-0-0
7-7-1	2-8-15	6-11-8	1-0-12	4-0-4	7-0-12	6-8-12	1-6-0	2-4-0

Plate Offsets (X,Y): [15:0-5-0,0-3-6]

LOADING (psf)		SPACING	2-0-0	CSI		DEFL	in	(loc)	l/defl	L/d	PLATES	GRIP
TCLL	20.0	Plates Increase	1.25	TC	0.43	Vert(LL)	-0.31	15-16	>999	240	MT20	244/190
TCDL	7.0	Lumber Increase	1.25	BC	0.97	Vert(TL)	-0.43	15-16	>892	180		
BCLL	10.0	Rep Stress Incr	YES	WB	0.81	Horz(TL)	0.19	12	n/a	n/a		
BCDL	5.0	Code	FBC2001/ANSI95	(Matrix)							Weight: 234 lb	

LUMBER
TOP CHORD 2 X 4 SYP No.2D
BOT CHORD 2 X 4 SYP No.2D
WEBS 2 X 4 SYP No.3

BRACING
TOP CHORD Sheathed or 2-11-0 oc purlins.
BOT CHORD Rigid ceiling directly applied or 4-3-10 oc bracing.
WEBS 1 Row at midpt 8-17, 10-16
2 Rows at 1/3 pts 6-19

REACTIONS (lb/size) 2=145/0-4-0, 12=1398/0-4-0, 20=2023/0-5-11
Max Horz 2=-216(load case 6)
Max Uplift2=-246(load case 5), 12=-528(load case 6), 20=-658(load case 5)
Max Grav 2=265(load case 7), 12=1398(load case 1), 20=2023(load case 1)

FORCES (lb) - Maximum Compression/Maximum Tension
TOP CHORD 1-2=0/47, 2-3=-152/567, 3-4=-404/179, 4-5=-298/195, 5-6=-434/405, 6-7=-1212/718, 7-8=-1463/795, 8-9=-2268/1155, 9-10=-2395/1141, 10-11=-4607/2052, 11-12=-2325/1018, 12-13=0/47
BOT CHORD 2-20=-479/301, 19-20=-1974/1095, 18-19=-130/1160, 17-18=-229/1304, 16-17=-740/2100, 15-16=-1661/3970, 14-15=-785/2177, 12-14=-734/1974
WEBS 3-20=-2426/1235, 3-19=-1102/2532, 5-19=-333/409, 6-19=-1360/381, 6-18=-183/864, 7-18=-207/214, 8-17=-1011/622, 8-16=-109/541, 10-16=-1894/933, 10-15=-285/1073, 11-15=-1030/2301, 11-14=-1129/453, 7-17=-233/393

NOTES
1) Unbalanced roof live loads have been considered for this design.
2) Wind: ASCE 7-98; 110mph (3-second gust); h=20ft; TCDL=4.2psf; BCDL=3.0psf; Category II; Exp B; enclosed; MWFRS gable end zone and C-C Exterior(2) zone; porch left exposed; Lumber DOL=1.60 plate grip DOL=1.60. This truss is designed for C-C for members and forces, and for MWFRS for reactions specified.
3) Provide adequate drainage to prevent water ponding.
4) Provide mechanical connection (by others) of truss to bearing plate capable of withstanding 246 lb uplift at joint 2, 528 lb uplift at joint 12 and 658 lb uplift at joint 20.

LOAD CASE(S) Standard

SEPTEMBER 30, 2005 TRUSS DESIGN ENGINEER:
THOMAS E. MILLER PE 56877, BYRON K. ANDERSON PE 60987
STRUCTURAL ENGINEERING AND INSPECTIONS, INC. EB 9196
16105 N. FLORIDA AVE. STE B, LUTZ, FL 33549

Job	Truss	Truss Type	Qty	Ply	WOODMAN PARK LOT 34 TURKEY RUN
L134662	T24	SPECIAL	1	1	Job Reference (optional)

Dwg.#093005054

Builders FirstSource, Lake City, Fl 32055

6.200 s Jul 13 2005 MiTek Industries, Inc. Thu Sep 29 10:18:22 2005 Page 1

22-4-8

-2-0-0	5-5-4	10-4-0	14-9-12	19-3-8	20-8-8	29-3-4	36-2-0	37-8-0	40-0-0	42-0-0
2-0-0	5-5-4	4-10-12	4-5-12	4-5-12	1-5-0 1-8-0	6-10-12	6-10-12	1-6-0	2-4-0	2-0-0

Scale = 1:73.7

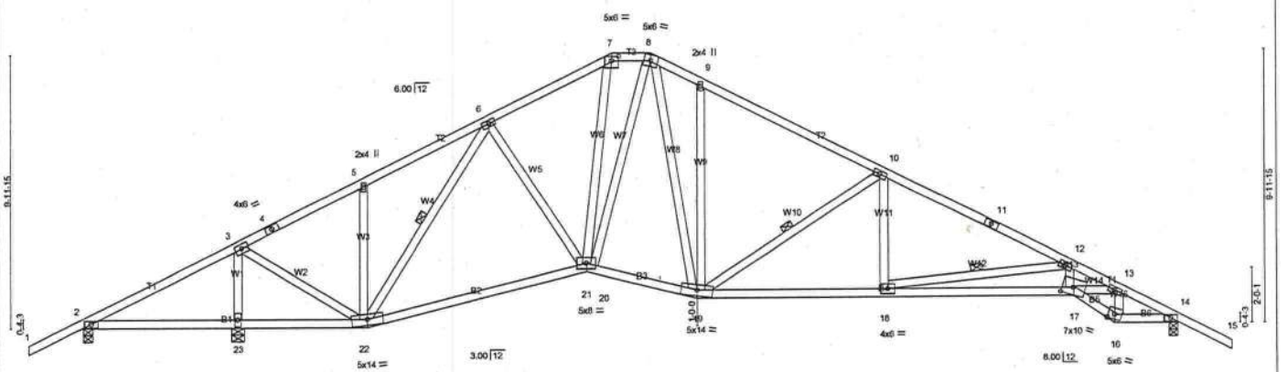

*** Uplift in gravity load case.**

5-7-1	10-4-0	18-4-4	20-8-8	22-4-8	29-3-4	36-2-0	37-8-0	40-0-0
5-7-1	4-8-15	8-0-4	2-4-4	1-8-0	6-10-12	6-10-12	1-6-0	2-4-0

Plate Offsets (X,Y): [7:0-3-0,0-2-0], [17:0-5-0,0-3-6]

LOADING (psf)		SPACING	2-0-0	CSI		DEFL	in	(loc)	l/defl	L/d	PLATES	GRIP
TCLL	20.0	Plates Increase	1.25	TC	0.47	Vert(LL)	-0.33	17-18	>999	240	MT20	244/190
TCDL	7.0	Lumber Increase	1.25	BC	1.00	Vert(TL)	-0.46	17-18	>892	180		
BCLL	10.0	Rep Stress Incr	YES	WB	0.83	Horz(TL)	0.18	14	n/a	n/a		
BCDL	5.0	Code	FBC2001/ANSI95	(Matrix)							Weight: 253 lb	

LUMBER
TOP CHORD 2 X 4 SYP No.2D
BOT CHORD 2 X 4 SYP No.2D
WEBS 2 X 4 SYP No.3

BRACING
TOP CHORD Sheathed or 2-10-0 oc purlins.
BOT CHORD Rigid ceiling directly applied or 4-8-9 oc bracing.
WEBS 1 Row at midpt 6-22, 10-19, 12-18

REACTIONS (lb/size) 2=-318/0-4-0, 14=1450/0-4-0, 23=2434/0-5-11
Max Horz 2=-236(load case 6)
Max Uplift2=-435(load case 8), 14=-569(load case 6), 23=-753(load case 5)

FORCES (lb) - Maximum Compression/Maximum Tension
TOP CHORD 1-2=0/47, 2-3=-607/1457, 3-4=-649/413, 4-5=-549/428, 5-6=-642/571, 6-7=-1490/892, 7-8=-1226/831, 8-9=-1550/1094, 9-10=-1593/931, 10-11=-2460/1283, 11-12=-2513/1268, 12-13=-4833/2268, 13-14=-2429/1122, 14-15=0/47
BOT CHORD 2-23=-1227/688, 22-23=-1227/688, 21-22=-268/1157, 20-21=-201/1273, 19-20=-207/1271, 18-19=-851/2204, 17-18=-1852/4166, 16-17=-882/2277, 14-16=-823/2065
WEBS 3-22=-879/2058, 5-22=-232/281, 6-22=-1081/367, 6-21=0/428, 7-21=-181/453, 8-20=-147/195, 9-19=-280/362, 10-19=-1020/627, 10-18=-124/559, 12-18=-1985/1013, 12-17=-322/1123, 13-17=-1142/2420, 13-16=-1186/499, 8-19=-626/716, 3-23=-2279/1187

NOTES
1) Unbalanced roof live loads have been considered for this design.
2) Wind: ASCE 7-98; 110mph (3-second gust); h=20ft; TCDL=4.2psf; BCDL=3.0psf; Category II; Exp B; enclosed; MWFRS gable end zone and C-C Exterior(2) zone; porch left exposed; Lumber DOL=1.60 plate grip DOL=1.60. This truss is designed for C-C for members and forces, and for MWFRS for reactions specified.
3) Provide adequate drainage to prevent water ponding.
4) All plates are 3x6 MT20 unless otherwise indicated.
5) Provide mechanical connection (by others) of truss to bearing plate capable of withstanding 435 lb uplift at joint 2, 569 lb uplift at joint 14 and 753 lb uplift at joint 23.

LOAD CASE(S) Standard

SEPTEMBER 30, 2005 TRUSS DESIGN ENGINEER:
THOMAS E. MILLER PE 56877, BYRON K. ANDERSON PE 60987
STRUCTURAL ENGINEERING AND INSPECTIONS, INC. EB 9196
16105 N. FLORIDA AVE. STE B, LUTZ, FL 33549

Job	Truss	Truss Type	Qty	Ply	WOODMAN PARK LOT 34 TURKEY RUN
L134662	T25	HIP	1	1	Job Reference (optional)

Dwg.#093005055

Builders FirstSource, Lake City, Fl 32055

6.200 s Jul 13 2005 MiTek Industries, Inc. Thu Sep 29 10:18:23 2005 Page 1

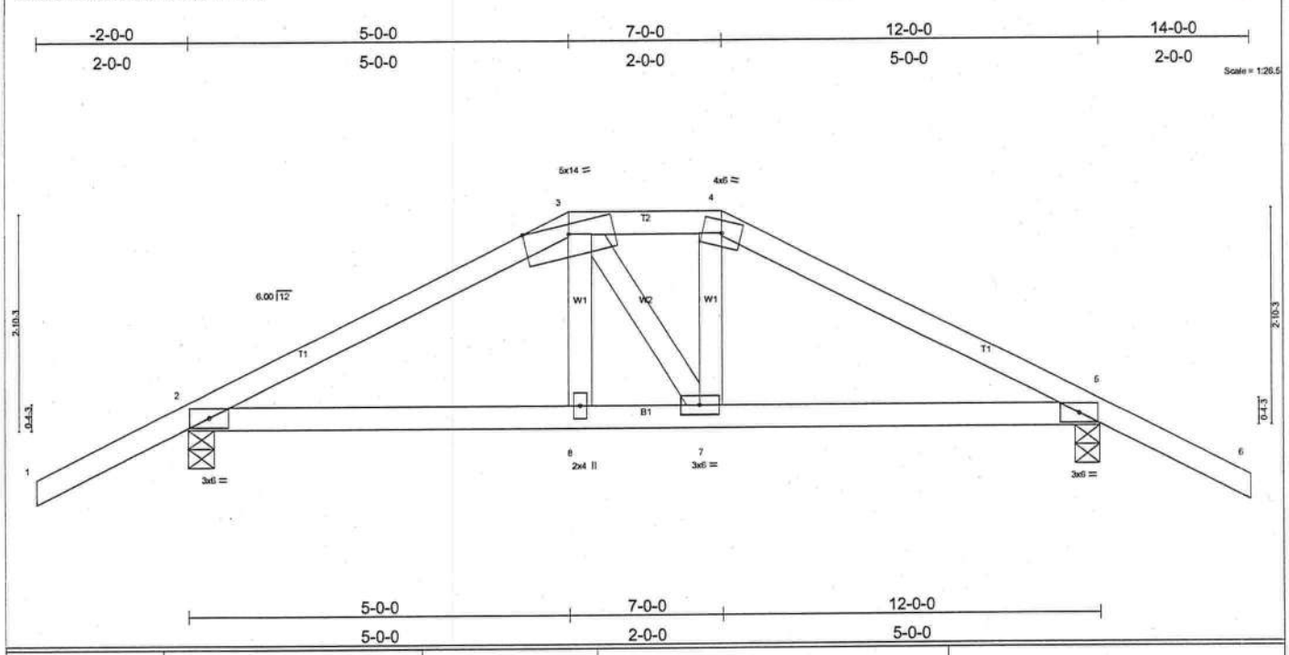

LOADING (psf)		SPACING	2-0-0	CSI		DEFL	in	(loc)	l/defl	L/d	PLATES	GRIP
TCLL	20.0	Plates Increase	1.25	TC	0.24	Vert(LL)	0.04	2-8	>999	240	MT20	244/190
TCDL	7.0	Lumber Increase	1.25	BC	0.27	Vert(TL)	-0.05	2-8	>999	180		
BCLL	10.0	Rep Stress Incr	NO	WB	0.14	Horz(TL)	0.02	5	n/a	n/a		
BCDL	5.0	Code	FBC2001/ANSI95	(Matrix)							Weight: 55 lb	

LUMBER
TOP CHORD 2 X 4 SYP No.2D
BOT CHORD 2 X 4 SYP No.2D
WEBS 2 X 4 SYP No.3

BRACING
TOP CHORD Sheathed or 5-7-1 oc purlins.
BOT CHORD Rigid ceiling directly applied or 8-9-10 oc bracing.

REACTIONS (lb/size) 2=905/0-4-0, 5=905/0-4-0
Max Horz 2=94(load case 4)
Max Uplift2=-574(load case 4), 5=-574(load case 5)

FORCES (lb) - Maximum Compression/Maximum Tension
TOP CHORD 1-2=0/47, 2-3=-1302/654, 3-4=-1121/630, 4-5=-1305/655, 5-6=0/47
BOT CHORD 2-8=-534/1097, 7-8=-544/1117, 5-7=-520/1100
WEBS 3-8=-199/362, 3-7=-67/78, 4-7=-221/423

NOTES
1) Unbalanced roof live loads have been considered for this design.
2) Wind: ASCE 7-98; 110mph (3-second gust); h=20ft; TCDL=4.2psf; BCDL=3.0psf; Category II; Exp B; enclosed; MWFRS gable end zone; porch left and right exposed; Lumber DOL=1.60 plate grip DOL=1.60.
3) Provide adequate drainage to prevent water ponding.
4) Provide mechanical connection (by others) of truss to bearing plate capable of withstanding 574 lb uplift at joint 2 and 574 lb uplift at joint 5.
5) Girder carries hip end with 5-0-0 end setback.
6) Hanger(s) or other connection device(s) shall be provided sufficient to support concentrated load(s) 245 lb down and 126 lb up at 7-0-0, and 245 lb down and 126 lb up at 5-0-0 on bottom chord. The design/selection of such connection device(s) is the responsibility of others.
7) In the LOAD CASE(S) section, loads applied to the face of the truss are noted as front (F) or back (B).

LOAD CASE(S) Standard
1) Regular: Lumber Increase=1.25, Plate Increase=1.25
Uniform Loads (plf)
Vert: 1-3=-54, 3-4=-90(F=-36), 4-6=-54, 2-8=-30, 7-8=-50(F=-20), 5-7=-30
Concentrated Loads (lb)
Vert: 8=-245(F) 7=-245(F)

SEPTEMBER 30, 2005 TRUSS DESIGN ENGINEER:
THOMAS E. MILLER PE 56877, BYRON K. ANDERSON PE 60987
STRUCTURAL ENGINEERING AND INSPECTIONS, INC. EB 9196
16105 N. FLORIDA AVE. STE B, LUTZ, FL 33549

Job	Truss	Truss Type	Qty	Ply	WOODMAN PARK LOT 34 TURKEY RUN	Dwg.#093005056
L134662	T26	SPECIAL	1	2	Job Reference (optional)	

Builders FirstSource, Lake City, Fl 32055 — 6.200 s Jul 13 2005 MiTek Industries, Inc. Thu Sep 29 10:18:24 2005 Page 1

2-4-0	3-10-0	5-0-0	10-1-0	11-3-0	12-9-0	15-1-0	17-1-0
2-4-0	1-6-0	1-2-0	5-1-0	1-2-0	1-6-0	2-4-0	2-0-0

Scale = 1:28.6

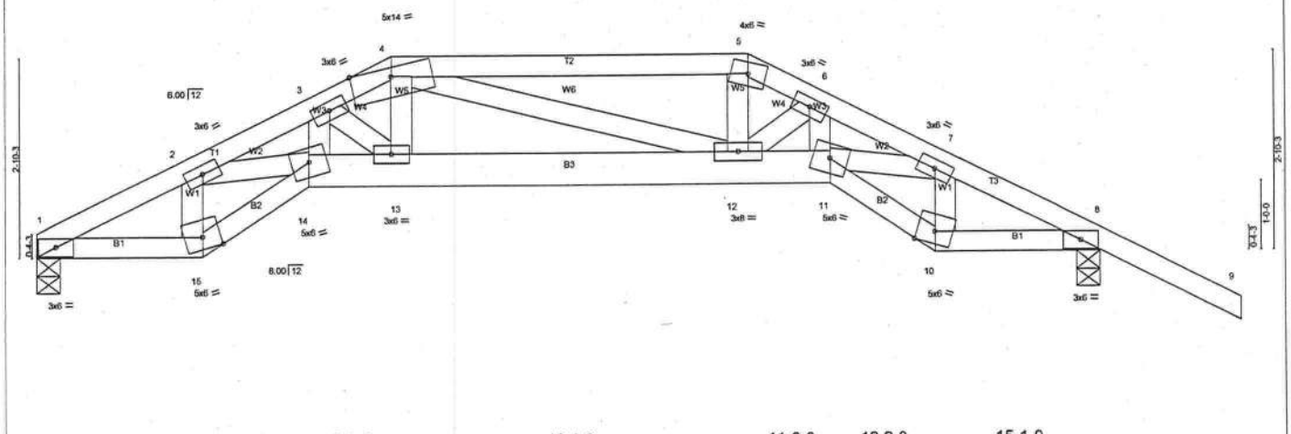

2-4-0	3-10-0	5-0-0	10-1-0	11-3-0	12-9-0	15-1-0
2-4-0	1-6-0	1-2-0	5-1-0	1-2-0	1-6-0	2-4-0

LOADING (psf)		SPACING	2-0-0	CSI		DEFL	in	(loc)	l/defl	L/d	PLATES	GRIP
TCLL	20.0	Plates Increase	1.25	TC	0.12	Vert(LL)	-0.07	12-13	>999	240	MT20	244/190
TCDL	7.0	Lumber Increase	1.25	BC	0.33	Vert(TL)	-0.09	12-13	>999	180		
BCLL	10.0	Rep Stress Incr	NO	WB	0.25	Horz(TL)	0.06	8	n/a	n/a		
BCDL	5.0	Code FBC2001/ANSI95		(Matrix)							Weight: 161 lb	

LUMBER
TOP CHORD 2 X 4 SYP No.2D
BOT CHORD 2 X 4 SYP No.2D *Except*
B3 2 X 6 SYP No.1D
WEBS 2 X 4 SYP No.3

BRACING
TOP CHORD Sheathed or 6-0-0 oc purlins.
BOT CHORD Rigid ceiling directly applied or 10-0-0 oc bracing.

REACTIONS (lb/size) 1=977/0-4-0, 8=1111/0-4-0
Max Horz 1=-113(load case 5)
Max Uplift1=-333(load case 4), 8=-468(load case 5)

FORCES (lb) - Maximum Compression/Maximum Tension
TOP CHORD 1-2=-1892/640, 2-3=-3440/1160, 3-4=-2863/986, 4-5=-2648/914, 5-6=-2795/947, 6-7=-3377/1093, 7-8=-1790/573, 8-9=0/47
BOT CHORD 1-15=-559/1623, 14-15=-608/1776, 13-14=-955/2952, 12-13=-889/2720, 11-12=-875/2900, 10-11=-492/1661, 8-10=-454/1517
WEBS 2-15=-831/316, 2-14=-492/1527, 3-14=-221/632, 3-13=-419/196, 4-13=-346/994, 4-12=-147/86, 5-12=-300/962, 6-12=-442/144, 6-11=-187/624, 7-11=-496/1579, 7-10=-818/273

NOTES
1) Hanger(s) or other connection device(s) shall be provided sufficient to support concentrated load(s) 245 lb down and 126 lb up at 10-1-0, and 245 lb down and 126 lb up at 5-0-0 on bottom chord. The design/selection of such connection device(s) is the responsibility of others.
2) 2-ply truss to be connected together with 0.131"x3" Nails as follows:
Top chords connected as follows: 2 X 4 - 1 row at 0-9-0 oc.
Bottom chords connected as follows: 2 X 4 - 1 row at 0-9-0 oc, 2 X 6 - 2 rows at 0-9-0 oc.
Webs connected as follows: 2 X 4 - 1 row at 0-9-0 oc.
Hanger(s) or other connection device(s) shall be provided sufficient to support concentrated load(s) 245 lb down and 126 lb up at 10-1-0, and 245 lb down and 126 lb up at 5-0-0 on bottom chord. The design/selection of such connection device(s) is the responsibility of others.
3) All loads are considered equally applied to all plies, except if noted as front (F) or back (B) face in the LOAD CASE(S) section. Ply to ply connections have been provided to distribute only loads noted as (F) or (B), unless otherwise indicated.
4) Unbalanced roof live loads have been considered for this design.
5) Wind: ASCE 7-98; 110mph (3-second gust); h=20ft; TCDL=4.2psf; BCDL=3.0psf; Category II; Exp B; enclosed; MWFRS gable end zone; Lumber DOL=1.60 plate grip DOL=1.60.
6) Provide adequate drainage to prevent water ponding.
7) Provide mechanical connection (by others) of truss to bearing plate capable of withstanding 333 lb uplift at joint 1 and 468 lb uplift at joint 8.
8) Girder carries tie-in span(s): 4-8-15 from 5-0-0 to 10-1-0; 2-0-0 from 5-0-0 to 10-1-0
9) Girder carries hip end with 5-0-0 end setback.
10) Hanger(s) or other connection device(s) shall be provided sufficient to support concentrated load(s) 245 lb down and 126 lb up at 10-1-0, and 245 lb down and 126 lb up at 5-0-0 on bottom chord. The design/selection of such connection device(s) is the responsibility of others.

LOAD CASE(S) Standard
1) Regular: Lumber Increase=1.25, Plate Increase=1.25
Uniform Loads (plf)
Vert: 1-4=-54, 4-5=-54, 5-9=-54, 1-15=-30, 14-15=-30, 13-14=-30, 12-13=-81(F=-51), 11-12=-30, 10-11=-30, 8-10=-30
Concentrated Loads (lb)
Vert: 13=-245(F) 12=-245(F)

SEPTEMBER 30, 2005 TRUSS DESIGN ENGINEER:
THOMAS E. MILLER PE 56877, BYRON K. ANDERSON PE 60987
STRUCTURAL ENGINEERING AND INSPECTIONS, INC. EB 9196
16105 N. FLORIDA AVE. STE B, LUTZ, FL 33549

Job	Truss	Truss Type	Qty	Ply	WOODMAN PARK LOT 34 TURKEY RUN
L134662	T27	SPECIAL	1	1	Job Reference (optional)

Dwg.#093005057

Builders FirstSource, Lake City, Fl 32055

6.200 s Jul 13 2005 MiTek Industries, Inc. Thu Sep 29 10:18:24 2005 Page 1

2-4-0	3-10-0	7-0-0	8-1-0	11-3-0	12-9-0	15-1-0	17-1-0
2-4-0	1-6-0	3-2-0	1-1-0	3-2-0	1-6-0	2-4-0	2-0-0

Scale = 1:28.6

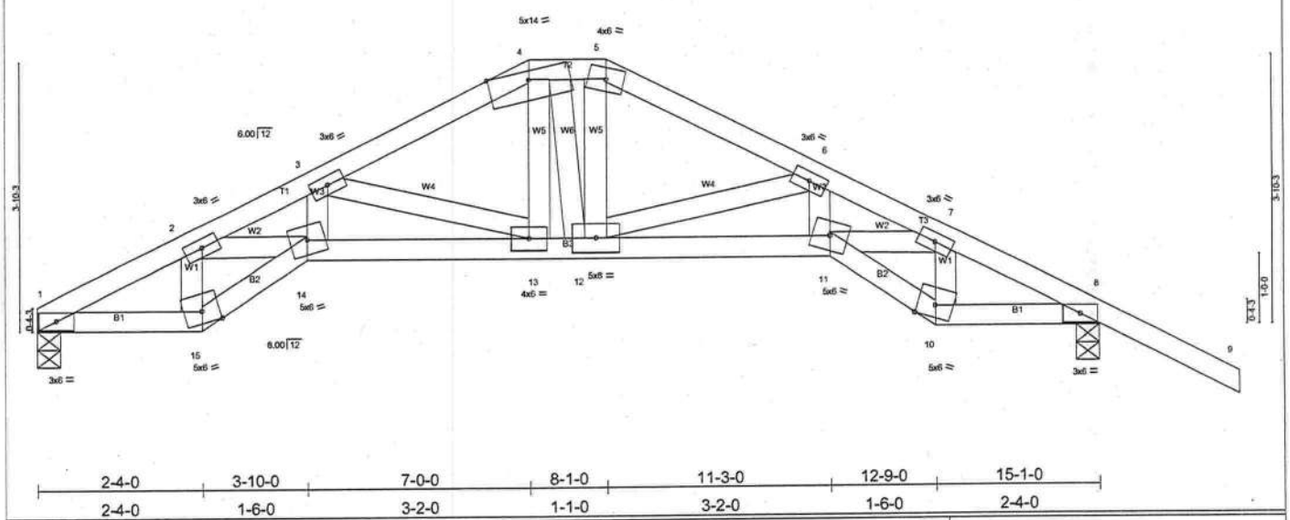

2-4-0	3-10-0	7-0-0	8-1-0	11-3-0	12-9-0	15-1-0
2-4-0	1-6-0	3-2-0	1-1-0	3-2-0	1-6-0	2-4-0

LOADING (psf)		SPACING	2-0-0	CSI		DEFL	in	(loc)	l/defl	L/d	PLATES	GRIP
TCLL	20.0	Plates Increase	1.25	TC	0.26	Vert(LL)	-0.07	13-14	>999	240	MT20	244/190
TCDL	7.0	Lumber Increase	1.25	BC	0.37	Vert(TL)	-0.10	13-14	>999	180		
BCLL	10.0	Rep Stress Incr	YES	WB	0.27	Horz(TL)	0.07	8	n/a	n/a		
BCDL	5.0	Code FBC2001/ANSI95		(Matrix)							Weight: 81 lb	

LUMBER
TOP CHORD 2 X 4 SYP No.2D
BOT CHORD 2 X 4 SYP No.2D
WEBS 2 X 4 SYP No.3

BRACING
TOP CHORD Sheathed or 4-8-9 oc purlins.
BOT CHORD Rigid ceiling directly applied or 8-5-7 oc bracing.

REACTIONS (lb/size) 1=611/0-4-0, 8=745/0-4-0
Max Horz 1=-133(load case 6)
Max Uplift1=-181(load case 5), 8=-326(load case 6)

FORCES (lb) - Maximum Compression/Maximum Tension
TOP CHORD 1-2=-1117/590, 2-3=-1895/884, 3-4=-1008/500, 4-5=-910/496, 5-6=-999/492, 6-7=-1819/767, 7-8=-1017/425, 8-9=0/47
BOT CHORD 1-15=-396/948, 14-15=-429/1052, 13-14=-591/1601, 12-13=-202/899, 11-12=-506/1545, 10-11=-242/938, 8-10=-226/846
WEBS 2-15=-479/221, 2-14=-249/792, 3-14=-175/531, 3-13=-755/416, 4-13=-124/294, 4-12=-59/122, 5-12=-107/293, 6-12=-700/333, 6-11=-82/473, 7-11=-318/828, 7-10=-463/195

NOTES
1) Unbalanced roof live loads have been considered for this design.
2) Wind: ASCE 7-98; 110mph (3-second gust); h=20ft; TCDL=4.2psf; BCDL=3.0psf; Category II; Exp B; enclosed; MWFRS gable end zone and C-C Exterior(2) zone; Lumber DOL=1.60 plate grip DOL=1.60. This truss is designed for C-C for members and forces, and for MWFRS for reactions specified.
3) Provide adequate drainage to prevent water ponding.
4) Provide mechanical connection (by others) of truss to bearing plate capable of withstanding 181 lb uplift at joint 1 and 326 lb uplift at joint 8.

LOAD CASE(S) Standard

SEPTEMBER 30, 2005 TRUSS DESIGN ENGINEER:
THOMAS E. MILLER PE 56877, BYRON K. ANDERSON PE 60987
STRUCTURAL ENGINEERING AND INSPECTIONS, INC. EB 9196
16105 N. FLORIDA AVE. STE B, LUTZ, FL 33549

Job	Truss	Truss Type	Qty	Ply	WOODMAN PARK LOT 34 TURKEY RUN
L134662	T28	SPECIAL	2	1	Job Reference (optional)

Dwg.#093005058

Builders FirstSource, Lake City, Fl 32055

6.200 s Jul 13 2005 MiTek Industries, Inc. Thu Sep 29 10:18:25 2005 Page 1

2-4-0	3-10-0	7-6-8	11-3-0	12-9-0	15-1-0	17-1-0
2-4-0	1-6-0	3-8-8	3-8-8	1-6-0	2-4-0	2-0-0

Scale = 1:28.3

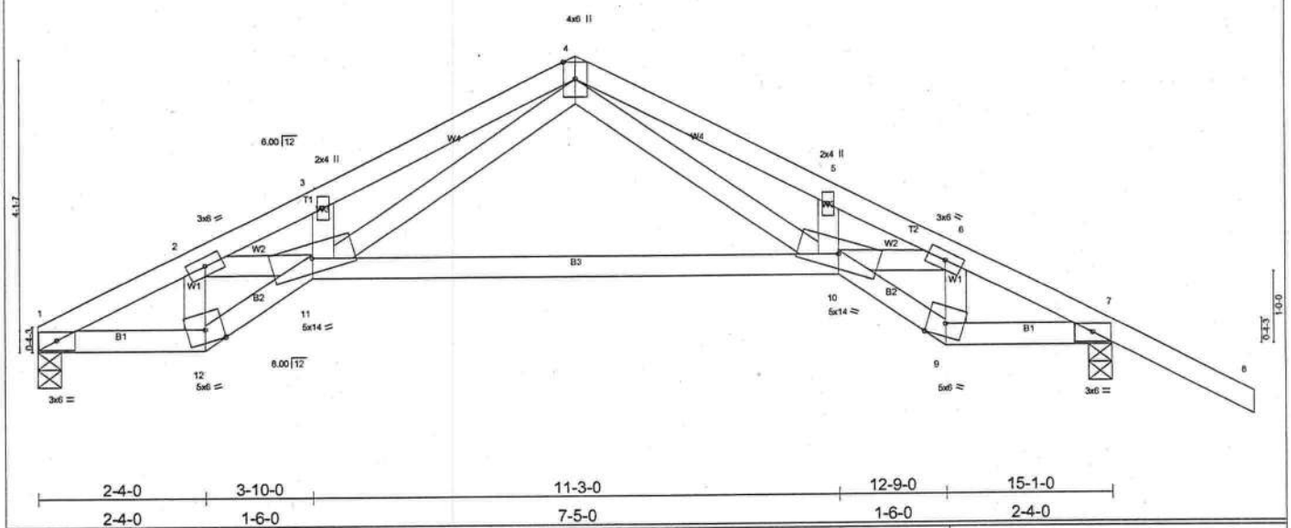

2-4-0	3-10-0	11-3-0	12-9-0	15-1-0
2-4-0	1-6-0	7-5-0	1-6-0	2-4-0

LOADING (psf)		SPACING	2-0-0	CSI		DEFL	in	(loc)	l/defl	L/d	PLATES	GRIP
TCLL	20.0	Plates Increase	1.25	TC	0.28	Vert(LL)	-0.17	10-11	>999	240	MT20	244/190
TCDL	7.0	Lumber Increase	1.25	BC	0.32	Vert(TL)	-0.24	10-11	>740	180		
BCLL	10.0	Rep Stress Incr	YES	WB	0.39	Horz(TL)	0.08	7	n/a	n/a		
BCDL	5.0	Code FBC2001/ANSI95		(Matrix)							Weight: 75 lb	

LUMBER
TOP CHORD 2 X 4 SYP No.2D
BOT CHORD 2 X 4 SYP No.2D
WEBS 2 X 4 SYP No.3

BRACING
TOP CHORD Sheathed or 4-5-12 oc purlins.
BOT CHORD Rigid ceiling directly applied or 9-7-14 oc bracing.

REACTIONS (lb/size) 1=611/0-4-0, 7=745/0-4-0
Max Horz 1=-138(load case 6)
Max Uplift1=-185(load case 5), 7=-320(load case 6)

FORCES (lb) - Maximum Compression/Maximum Tension
TOP CHORD 1-2=-1093/608, 2-3=-2014/883, 3-4=-1984/985, 4-5=-1924/886, 5-6=-1941/772, 6-7=-997/441, 7-8=0/47
BOT CHORD 1-12=-413/939, 11-12=-445/1082, 10-11=-196/797, 9-10=-257/967, 7-9=-242/834
WEBS 2-12=-591/224, 2-11=-225/903, 3-11=-73/155, 4-11=-546/1219, 4-10=-433/1150, 5-10=-88/177, 6-10=-301/949, 6-9=-577/200

NOTES
1) Unbalanced roof live loads have been considered for this design.
2) Wind: ASCE 7-98; 110mph (3-second gust); h=20ft; TCDL=4.2psf; BCDL=3.0psf; Category II; Exp B; enclosed; MWFRS gable end zone and C-C Exterior(2) zone; Lumber DOL=1.60 plate grip DOL=1.60. This truss is designed for C-C for members and forces, and for MWFRS for reactions specified.
3) Provide mechanical connection (by others) of truss to bearing plate capable of withstanding 185 lb uplift at joint 1 and 320 lb uplift at joint 7.

LOAD CASE(S) Standard

SEPTEMBER 30, 2005 TRUSS DESIGN ENGINEER:
THOMAS E. MILLER PE 56877, BYRON K. ANDERSON PE 60987
STRUCTURAL ENGINEERING AND INSPECTIONS, INC. EB 9196
16105 N. FLORIDA AVE. STE B, LUTZ, FL 33549

Symbols

PLATE LOCATION AND ORIENTATION

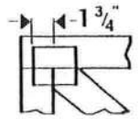

* Center plate on joint unless dimensions indicate otherwise. Dimensions are in inches. Apply plates to both sides of truss and securely seat.

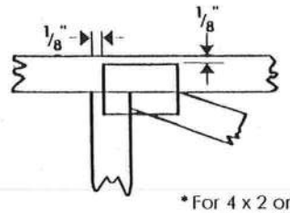

* For 4 x 2 orientation, locate plates 1/8" from outside edge of truss and vertical web.

* This symbol indicates the required direction of slots in connector plates.

PLATE SIZE

4 x 4

The first dimension is the width perpendicular to slots. Second dimension is the length parallel to slots.

LATERAL BRACING

Indicates location of required continuous lateral bracing.

BEARING

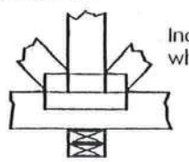

Indicates location of joints at which bearings (supports) occur.

Numbering System

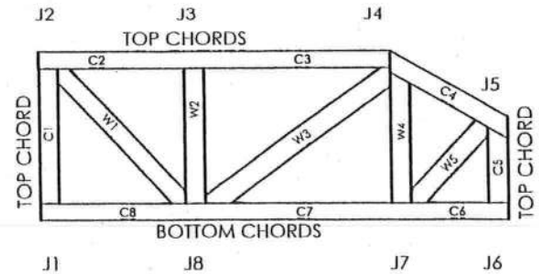

JOINTS AND CHORDS ARE NUMBERED CLOCKWISE AROUND THE TRUSS STARTING AT THE LOWEST JOINT FARTHEST TO THE LEFT.

WEBS ARE NUMBERED FROM LEFT TO RIGHT

CONNECTOR PLATE CODE APPROVALS

BOCA	96-31, 96-67
ICBO	3907, 4922
SBCCI	9667, 9432A
WISC/DILHR	960022-W, 970036-N
NER	561

MiTek Engineering Reference Sheet: MII-7473

General Safety Notes

Failure to Follow Could Cause Property Damage or Personal Injury

1. Provide copies of this truss design to the building designer, erection supervisor, property owner and all other interested parties.
2. Cut members to bear tightly against each other.
3. Place plates on each face of truss at each joint and embed fully. Avoid knots and wane at joint locations.
4. Unless otherwise noted, locate chord splices at ¼ panel length (± 6" from adjacent joint.)
5. Unless otherwise noted, moisture content of lumber shall not exceed 19% at time of fabrication.
6. Unless expressly noted, this design is not applicable for use with fire retardant or preservative treated lumber.
7. Camber is a non-structural consideration and is the responsibility of truss fabricator. General practice is to camber for dead load deflection.
8. Plate type, size and location dimensions shown indicate minimum plating requirements.
9. Lumber shall be of the species and size, and in all respects, equal to or better than the grade specified.
10. Top chords must be sheathed or purlins provided at spacing shown on design.
11. Bottom chords require lateral bracing at 10 ft. spacing, or less, if no ceiling is installed, unless otherwise noted.
12. Anchorage and / or load transferring connections to trusses are the responsibility of others unless shown.
13. Do not overload roof or floor trusses with stacks of construction materials.
14. Do not cut or alter truss member or plate without prior approval of a professional engineer.
15. Care should be exercised in handling, erection and installation of trusses.

MASTER 1

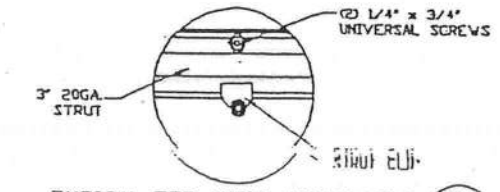

TYPICAL TOP STRUT ATTACHMENT (S1 / 3)
N.T.S.

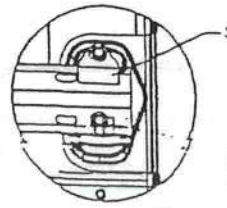

TYPICAL DURASAFE END HINGE (S1 / 4)
N.T.S.
GLAZED SECTION
NOT AVAILABLE IN 18" SECTIONS.

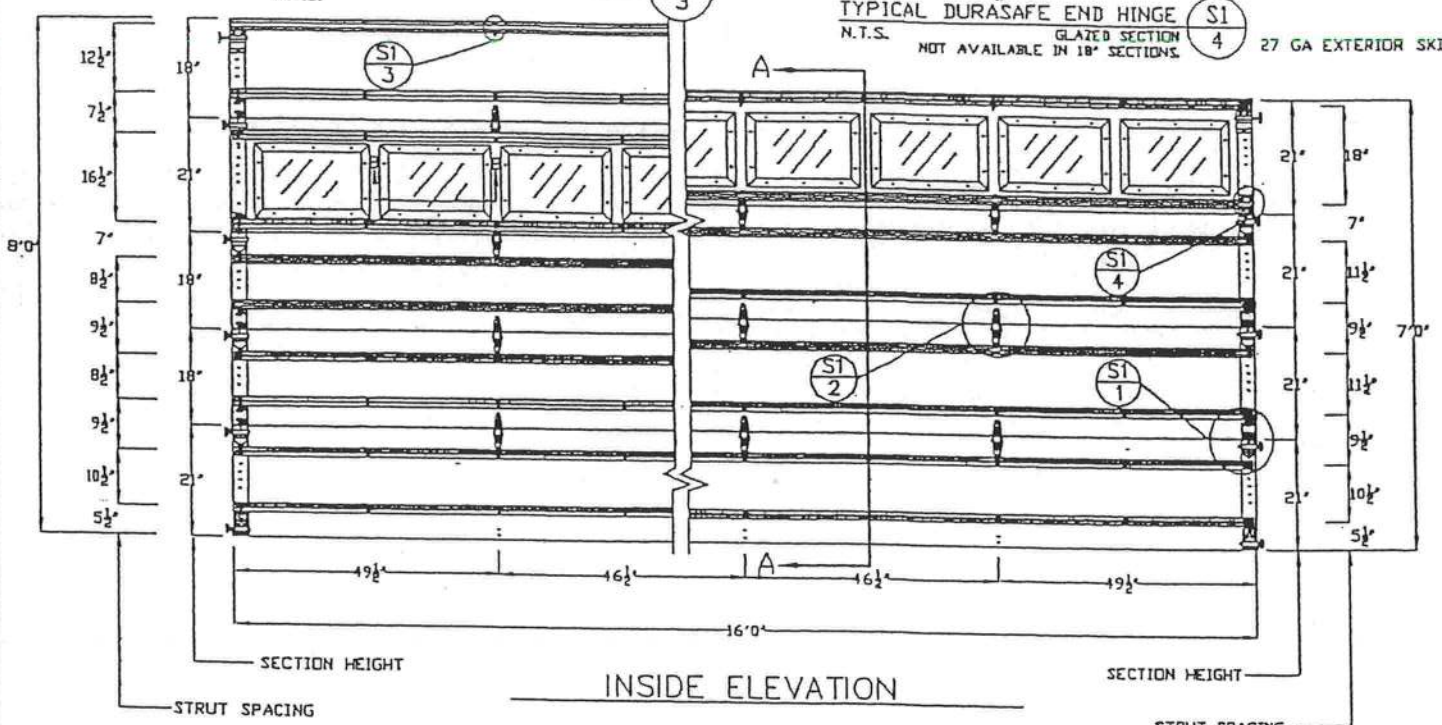

INSIDE ELEVATION

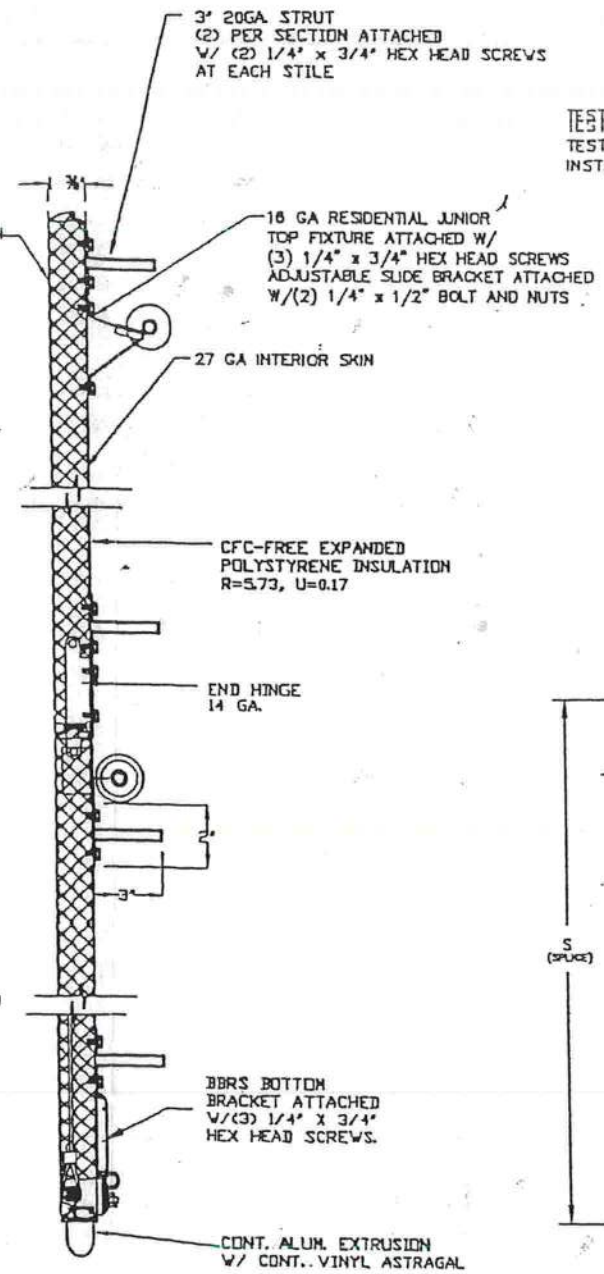

SECTION A-A (SIDE VIEW)

GLAZING OPTION CROSS SECTION

TEST No. SBC 580 020 ON MAY 31, 2000 INCLUDED GLASS WINDOWS IN THE REAR BEING USED. THE TEST PRESSURES WERE +49.5 PSF AND -51.9 PSF. BY COMPARISION, EIGHT (8) WINDOWS MAY BE INSTALLED IN (1) ONE SECTION OF THE 16' X 7' AND 16' X 8' MODEL 1500-D DOORS.

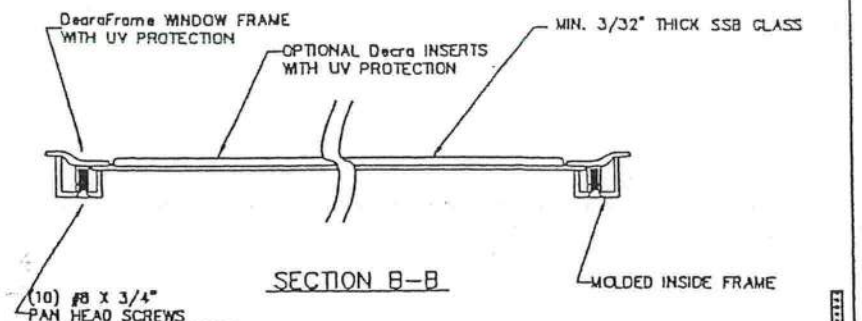

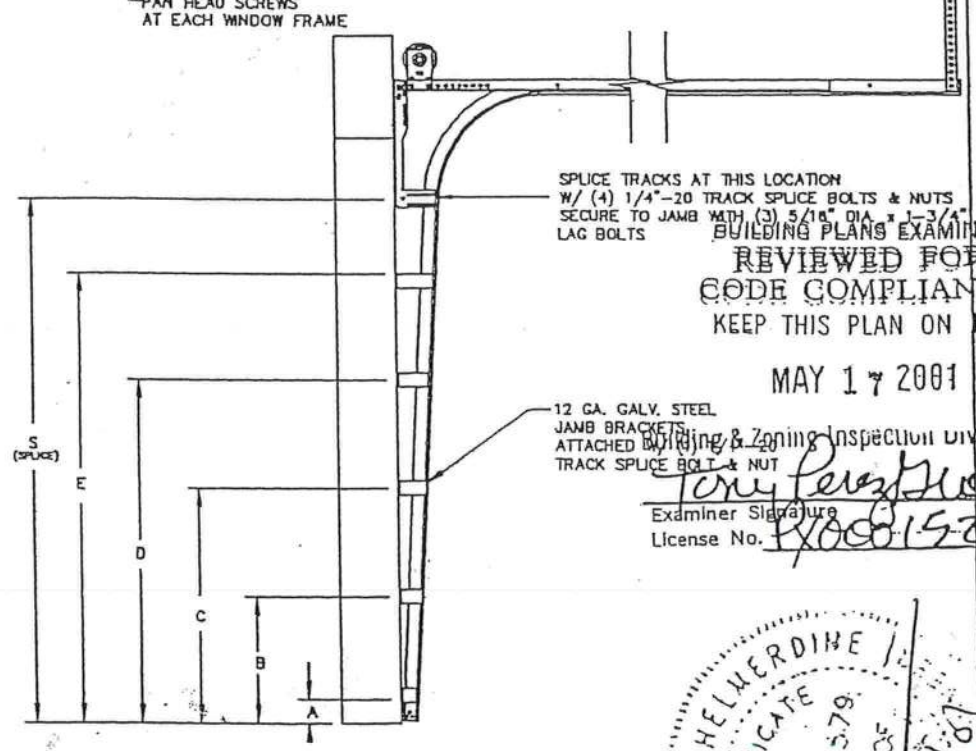

TRACK CONFIGURATION FOR 6'6" UP TO 8' TALL DOORS

JAMB BRACKET LOCATIONS

	A	B	C	D	E	S
6'-6"	4"	21-1/2"	39"	57"		70"
7'-0"	4"	21-1/2"	42"	63"		76"
7'-6"	4"	18-1/2"	36"	54"	72"	82"
8'-0"	4"	21-1/2"	39"	57"	75"	88"

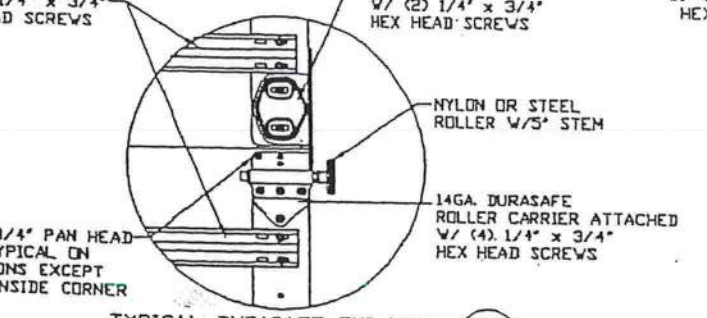

TYPICAL DURASAFE END HINGE (S1 / 1)
N.T.S.
NON GLAZED SECTION

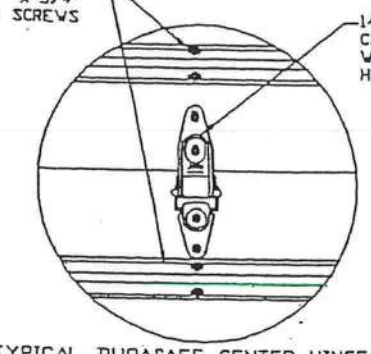

TYPICAL DURASAFE CENTER HINGE (S1 / 2)
N.T.S.

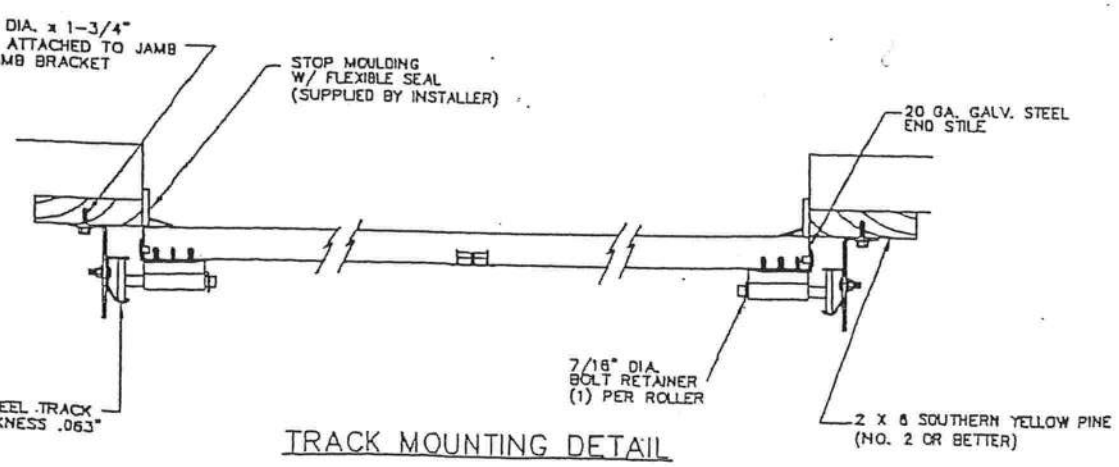

TRACK MOUNTING DETAIL

WOOD JAMB ATTACHMENT TO STRUCTURE
RATED FOR 110 MPH FASTEST-MILE BASIC WIND SPEEDS

VERTICAL JAMB ATTACHMENT TO WOOD FRAME STRUCTURE
5/16" X 3" LAG SCREWS STARTING 6" FROM ENDS THEN 24" O.C.

VERTICAL JAMB ATTACHMENT TO 2,000 PSI CONCRETE
HILTI KWIK BOLT 3/8" X 4" STARTING 6" FROM ENDS THEN 24" O.C.
HILTI SLEEVE ANCHOR 3/8" X 2-3/4" STARTING 6" FROM ENDS THEN 24" O.C.
ITW/RAMSET RED HEAD 3/8" X 3" STARTING 6" FROM ENDS THEN 24" O.C.

VERTICAL JAMB ATTACHMENT TO C-90 BLOCK
HILTI SLEEVE ANCHOR 3/8" X 2-3/4" STARTING 6" FROM ENDS THEN 24" O.C.
ITW/RAMSET TAPCON 1/4" X 2-3/4" STARTING 6" FROM ENDS, USE PAIRS OF FASTENERS (3" APART) AT 16" O.C.

*LAGS AND BOLTS CAN BE COUNTERSUNK TO PROVIDE A FLUSH MOUNTING SURFACE.
*PREPARATION OF WOOD JAMBS BY OTHERS

SPECIFICATIONS AND NOTES

1. DOORS AND HARDWARE WILL BE DESIGNED, MANUFACTURED AND INSTALLED WITH STANDARDS AS SET FORTH BY DASMA.
2. DOOR SECTIONS SHALL BE 27 GA. MIN. (.016") INTERIOR AND EXTERIOR ROLLED FORMED LIGHT COMMERCIAL QUALITY, G-40 GALVANIZATION
3. DOORS UPTO 7'0" HIGH CONSIST OF (4) SECTIONS AS SHOWN.
4. DOORS UPTO 8'0" HIGH CONSIST OF (5) SECTIONS AS SHOWN.
5. SUPPORTING STRUCTURAL ELEMENTS SHALL BE DESIGNED BY A REGISTRED PROFESSIONAL ENGINEER FOR WIND LOADS INDICATED ON THIS DRAWING IN ADDITION TO OTHER LOADINGS.
6. THE METHOD OF TESTING WAS IN SUBSTANTIAL CONFORMANCE WITH THE PROCEDURE DESCRIBED IN ASTM E330-90, AND THE SOUTHERN BUILDING CODE SECTION 1606 WIND LOAD DESIGN CRITERIA THE PRESSURES SHOWN ON THE DRAWINGS WERE CALCULATED USING THE FOLLOWING PARAMETERS:
   A. BASIC WIND SPEED OF 110 MPH
   B. DOOR CAN BE INSTALLED WITH 5 FEET OF DOORS WIDTH INSIDE THE EDGE STRIP.
   C. 15' MEAN ROOF HEIGHT AT ANY SLOPE
   D. USE FACTOR OF 1.0
   E. EXPOSURE RATING OF C

BUILDING PLANS EXAMINER
REVIEWED FOR
CODE COMPLIANCE
KEEP THIS PLAN ON JOB
MAY 17 2001
Building & Zoning Inspection Div. - Jax., FL.
Examiner Signature
License No. R0001520

THOMAS L. SHELVERDINE
CERTIFICATE NO. 48579
STATE OF FLORIDA

MAX SIZE 16' x 8'
DESIGN LOADS +29.5 PSF -29.5 PSF
TEST LOADS +49.5 PSF -49.5 PSF

REV	DESCRIPTION OF REVISIONS	DATE	BY

Amarr Garage Doors
3502 GRANTY CREEK BLVD. WINSTON-SALEM, N.C. 27105

MODEL #1500 WeatherGuard

SIZE	DRAWN BY DJ	DATE 4/18/01	DRAWING NUMBER
B	CHECKED BY	DATE	SBC-580-019-J
SCALE: NOT TO SCALE			SHEET 1 OF 1

MASTER 2

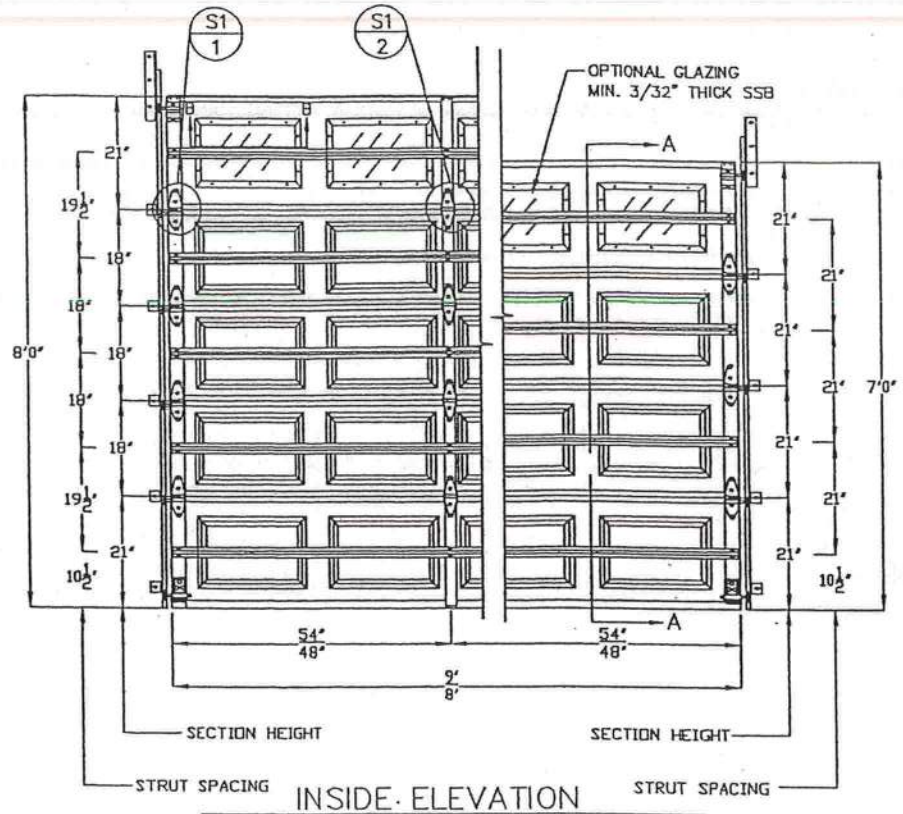

INSIDE ELEVATION

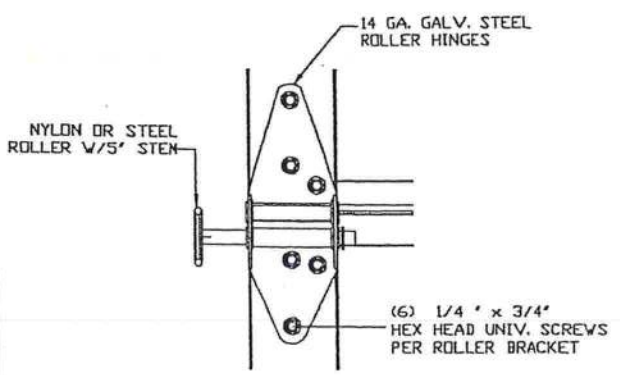

TYP. ROLLER BRACKET (S1 1)
N.T.S.

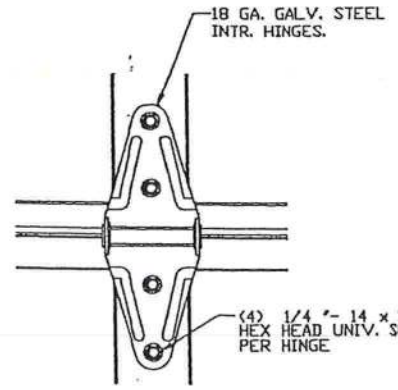

TYP. HINGE CONNECTION (S1 2)
N.T.S.

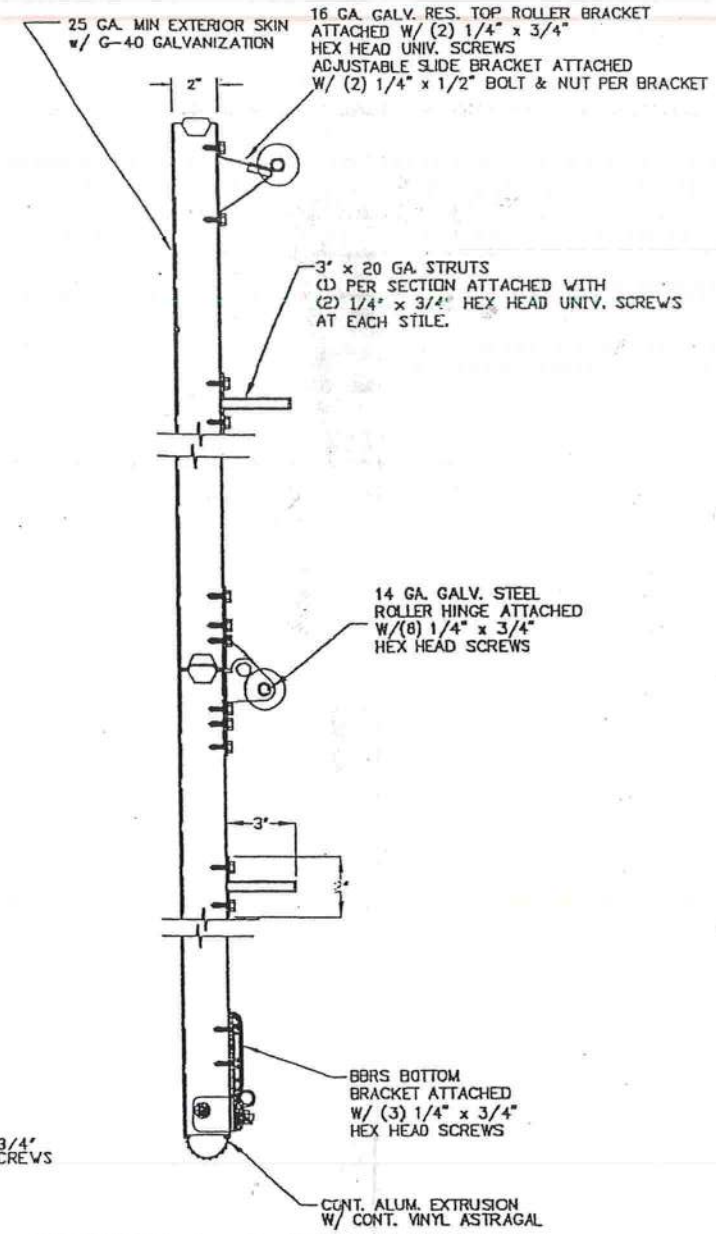

SECTION A–A (SIDE VIEW)

GLAZING OPTION CROSS SECTION

TEST No. SBC-580-011 ON OCTOBER 12, 1995 INCLUDED GLASS WINDOWS IN THE DOOR BEING USED. THE TEST PRESSURES WERE +48.4 PSF AND −54.7 PSF. BY COMPARISION, FOUR (4) WINDOWS MAY BE INSTALLED IN (1) ONE SECTION OF THE 9' X 7' AND 9' X 8' MODEL 600 AND 950 DOORS.

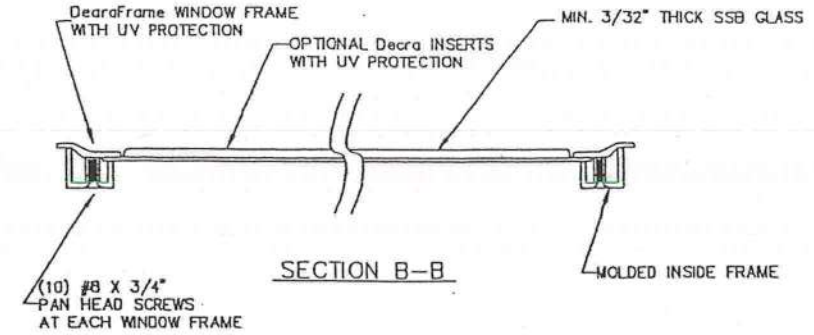

SECTION B–B

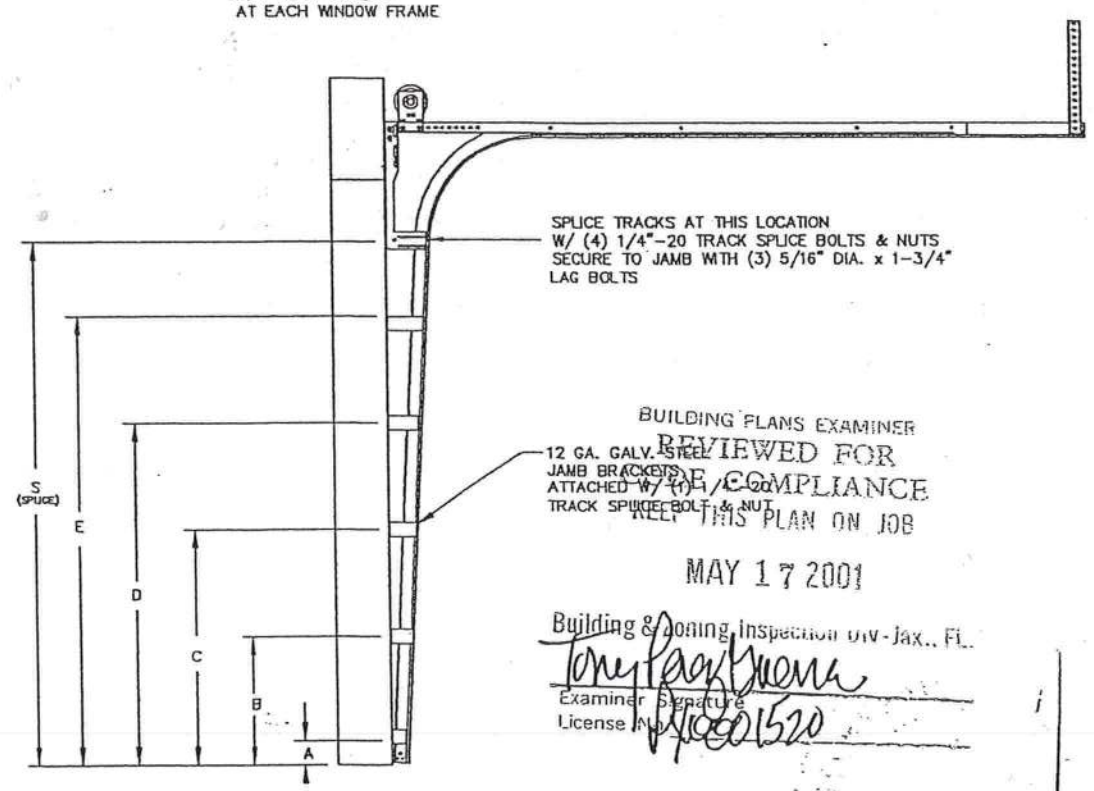

TRACK CONFIGURATION FOR 6'6" UP TO 8' TALL DOORS

BUILDING PLANS EXAMINER
REVIEWED FOR
CODE COMPLIANCE
KEEP THIS PLAN ON JOB

MAY 17 2001

Building & Zoning Inspection Div - Jax., Fl.
Examiner Signature
License No. 10001520

4/19/01

JAMB BRACKET LOCATIONS

	A	B	C	D	E	S
6'-6"	4"	21-1/2"	39"	57"		70"
7'-0"	4"	21-1/2"	42"	63"		76"
7'-6"	4"	18"	36"	54"	72"	82"
8'-0"	4"	21-1/2"	39"	57"	75"	88"

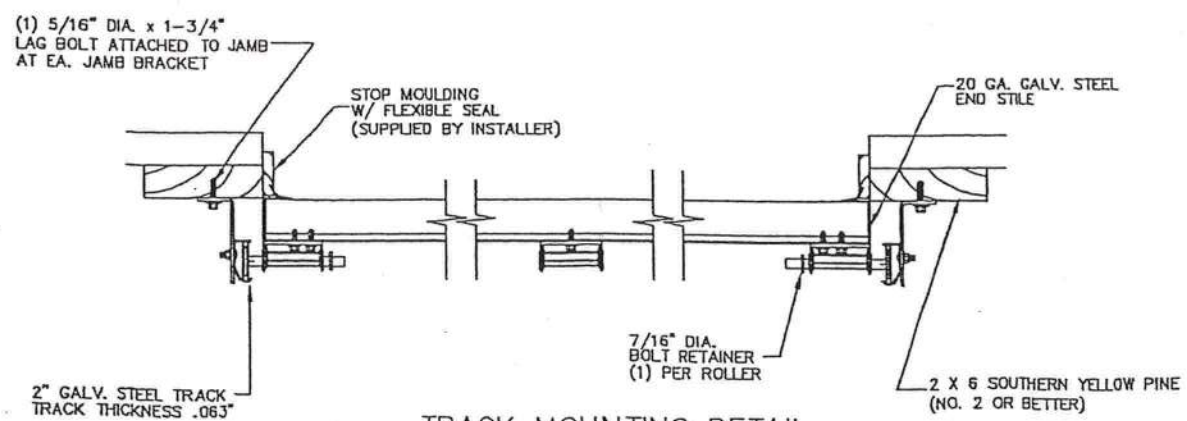

TRACK MOUNTING DETAIL

WOOD JAMB ATTACHMENT TO STRUCTURE

RATED FOR 110 MPH FASTEST-MILE BASIC WIND SPEEDS

VERTICAL JAMB ATTACHMENT TO WOOD FRAME STRUCTURE
5/16" X 3" LAG SCREWS STARTING 6" FROM ENDS THEN 24" O.C.

VERTICAL JAMB ATTACHMENT TO 2,000 PSI CONCRETE
HILTI KWK BOLT 3/8" X 4" STARTING 6" FROM ENDS THEN 24" O.C.
HILTI SLEEVE ANCHOR 3/8" X 2-3/4" STARTING 6" FROM ENDS THEN 24" O.C.
ITW/RAMSET RED HEAD 3/8" X 3" STARTING 6" FROM ENDS THEN 24" O.C.

VERTICAL JAMB ATTACHMENT TO C-90 BLOCK
HILTI SLEEVE ANCHOR 3/8" X 2-3/4" STARTING 6" FROM ENDS THEN 24" O.C.
ITW/RAMSET TAPCON 1/4" X 2-3/4" STARTING 6" FROM ENDS, USE PAIRS OF FASTENERS (3" APART) AT 24" O.C.

*LAGS AND BOLTS CAN BE COUNTERSUNK TO PROVIDE A FLUSH MOUNTING SURFACE.
*PREPARATION OF WOOD JAMBS BY OTHERS

SPECIFICATIONS AND NOTES

1. DOORS AND HARDWARE WILL BE DESIGNED, MANUFACTURED AND INSTALLED WITH STANDARDS AS SET FORTH BY DASMA.
2. DOOR SECTIONS SHALL BE 25 GA. (.019") MIN. ROLL FORMED LIGHT COMMERCIAL QUALITY, G-40 GALVANIZATION.
3. DOORS UPTO 7'0" HIGH CONSIST OF (4) SECTIONS AS SHOWN.
4. DOORS UPTO 8'0" HIGH CONSIST OF (5) SECTIONS AS SHOWN.
5. SUPPORTING STRUCTURAL ELEMENTS SHALL BE DESIGNED BY A REGISTRED PROFESSIONAL ENGINEER FOR WIND LOADS INDICATED ON THIS DRAWING IN ADDITION TO OTHER LOADINGS.
6. THE METHOD OF TESTING WAS IN SUBSTANTIAL CONFORMANCE WITH THE PROCEDURE DESCRIBED IN ASTM E330-90, AND THE SOUTHERN BUILDING CODE SECTION 1606 WIND LOAD DESIGN CRITERIA THE PRESSURES SHOWN ON THE DRAWINGS WERE CALCULATED USING THE FOLLOWING PARAMETERS:
   A. BASIC WIND SPEED OF 110 MPH
   B. DOOR CAN BE INSTALLED WITH 5 FEET OF DOORS WIDTH INSIDE THE EDGE STRIP.
   C. 15' MEAN ROOF HEIGHT AT ANY SLOPE
   D. USE FACTOR OF 1.0
   E. EXPOSURE RATING OF C

MAX SIZE 9' x 8'

DESIGN LOADS
+28.7 PSF
−31.3 PSF

TEST LOADS
+43.0 PSF
−46.8 PSF

REV	DESCRIPTION OF REVISIONS	DATE	BY

Amarr GARAGE DOORS
5931 GRASSY CREEK BLVD. WINSTON-SALEM, N.C. 27105

MODEL #300 STRATFORD
MODEL #950 HERITAGE III

SIZE	DRAWN BY GLJ	DATE 04/12/01	DRAWING NUMBER
8	CHECKED BY	DATE	SBC-580-007-J
SCALE: NOT TO SCALE			SHEET 1 OF 1

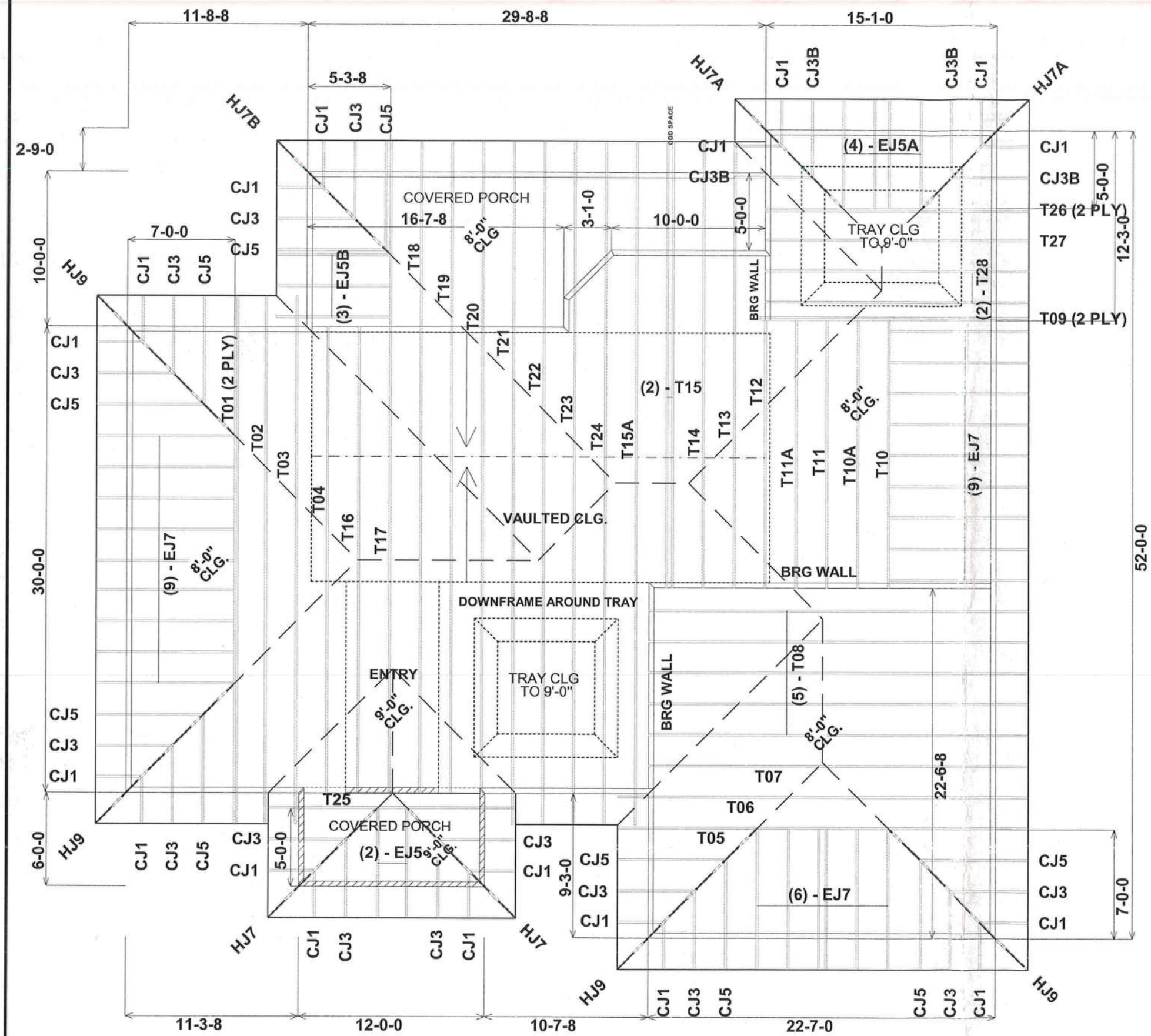

HANGER SCHEDULE

(5) HUS26

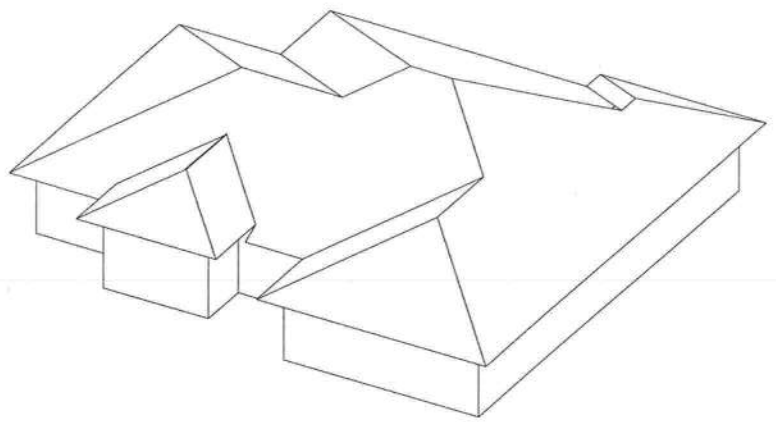

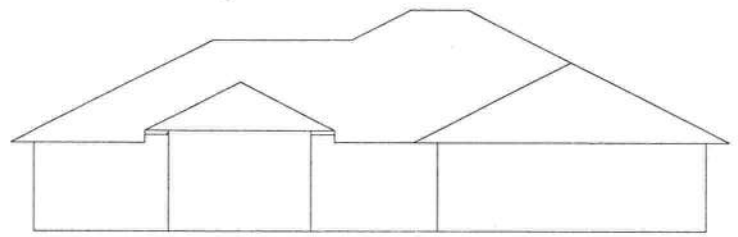

BEARING HEIGHT SCHEDUL

8'-(

9'-(

EXTERIOR WALL SIZE	2 X
OVERHANG	2'
ROOF PITCH(S)	6/

NOTES:

1.) REFER TO HIB 91 (RECOMMENDATIONS FOR HANDLING INSTALLATION AND TEMPORARY BRA REFER TO ENGINEERED DRAWINGS FOR PERMAN BRACING REQUIRED.

2.) ALL TRUSSES (INCLUDING TRUSSES UNDER VALLEY FRAMING) MUST BE COMPLETELY DECKED OR REFER TO DETAIL V105 FOR ALTERNATE BRACING REQUIREMENTS.

3.) ALL VALLEYS ARE TO BE CONVENTIONALLY FRAMED BY BUILDER.

4.) ALL TRUSSES ARE DESIGNED FOR 2' o.c. MAXIMUM SPACING, UNLESS OTHERWISE NOTED.

5.) ALL WALLS SHOWN ON PLACEMENT PLAN ARE CONSIDERED TO BE LOAD BEARING, UNLESS OTHERWISE NOTED.

6.) SY42 TRUSSES MUST BE INSTALLED WITH THE TOP BEING UP.

7.) ALL ROOF TRUSS HANGERS TO BE SIMPSON HU526 UNLESS OTHERWISE NOTED. ALL FLOOR TRUSS HANGERS TO BE SIMPSON THA422 UNLESS OTHERWISE NOTED.

8.) BEAM/HEADER/LINTEL (HDR) TO BE FURNISHED BY BUILDER.

SHOP DRAWING APPROVA

THIS LAYOUT IS THE SOLE SOURCE FOR FABRICATION TRUSSES AND VOIDS ALL PREVIOUS ARCHITECTURAL OR G TRUSS LAYOUTS. REVIEW AND APPROVAL OF THIS LAYOUT BE RECEIVED BEFORE ANY TRUSSES WILL BE BUILT. VERIF CONDITIONS TO INSURE AGAINST CHANGES THAT WILL RE IN EXTRA CHARGES TO YOU.

Requested Delivery Date: _____

Approved by: _____ Date: _____

Builders FirstSource

Bunnell
PHONE: 904-437-3349 FAX: 904-437-

Jacksonville
PHONE: 904-772-6100 FAX: 904-772-

Lake City
PHONE: 904-755-6894 FAX: 904-755-

Sanford
PHONE: 407-322-0059 FAX: 407-322-

BUILDER: WOODMAN PARK BUILDE

LEGAL ADDRESS: TURKEY RUN LOT 34

MODEL:	REVISION:
CUSTOM	SCALE: NT

DATE:	DRAWN BY:	JOB #:
9/29/05	BPC	L13466