NEW GENERATION CHRISTIAN SCHOOL

SECTION 17, TOWNSHIP 4 SOUTH, RANGE 17 EAST
COLUMBIA COUNTY, FLORIDA

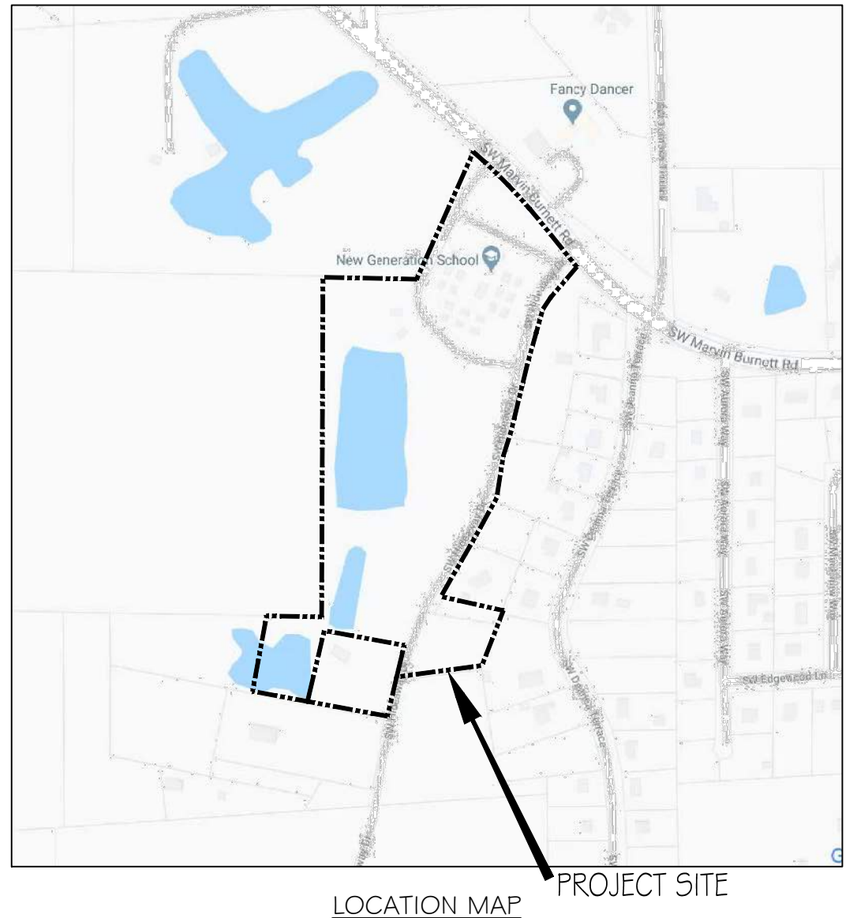

LOCATION MAP
NOT TO SCALE

OWNER:

NEW GENERATION CHRISTIAN SCHOOL
608 SW MARVIN BURNETT RD.
LAKE CITY, FL 32025
386.758.4710
CONTACT: PAULA MILLER
pmiller@newgenerationschool.org

CIVIL ENGINEER:

CAROL CHADWICK, P.E.
1208 S.W. FAIRFAX GLEN
LAKE CITY, FL 32025
307.680.1772
ccpewyo@gmail.com

SURVEYOR:

DANIEL & GORE, LLC
426 SW COMMERCE BLVD., SUITE 130-N
LAKE CITY, FL 32025
386.752.9019

SHEET INDEX

1	COVER SHEET
2	NOTES, LEGEND & DETAILS
3	OVERALL SITE PLAN
4	SITE & DIMENSION PLAN
5	GRADING & DRAINAGE PLAN
6	LANDSCAPE PLAN
7	WATER DETAILS

NOTES

1. SITE PARCEL: 07-4S-17-081100-000
2. FUTURE LAND USE: RESIDENTIAL-LOW
3. ZONING: RSF-2
4. SITE ADDRESS: 608 SW MARVIN BURNETT ROAD, LAKE CITY, FL

Carol Chadwick, PE
cn=Carol Chadwick, PE, o=This item has been electronically signed and sealed by Carol Chadwick, PE using a digital signature., ou, email=ccpewyo@gmail.com, c=US
2020.06.15 15:36:06 -04'00'

ENGINEER OF RECORD: CAROL CHADWICK, P.E.
P.E. NO.: 82560

CAROL CHADWICK, P.E.
1208 S.W. Fairfax Glen
Lake City, FL 32025
ccpewyo@gmail.com
www.carolchadwickpe.com
P.E. No. 82560
FLORIDA ♦ WYOMING ♦ N.C.E.E.S.
OREGON ♦ CALIFORNIA

CAROL J. CHADWICK
LICENSE No. 82560
STATE OF FLORIDA
PROFESSIONAL ENGINEER

REVISION DESCRIPTION	DATE

PREPARED FOR
NEW GEN. CHRISTIAN SCHOOL
608 SW MARVIN BURNETT RD.
LAKE CITY, FL 32025
386.758.4710
CONTACT: PAULA MILLER
pmiller@newgenerationschool.org

NEW GENERATION CHRISTIAN SCHOOL
COVER SHEET

PROJECT NO. FL19041
DATE JUNE 14, 2020
REVISION DATE
SHEET 1 OF 7 SHEETS

C:\CONSULTING\JOB FILES\NEW GENERATION SCHOOL\FL19041\DWGS\PLANS\FL19041-01-COVER.dwg, 6/15/2020 3:20:28 PM

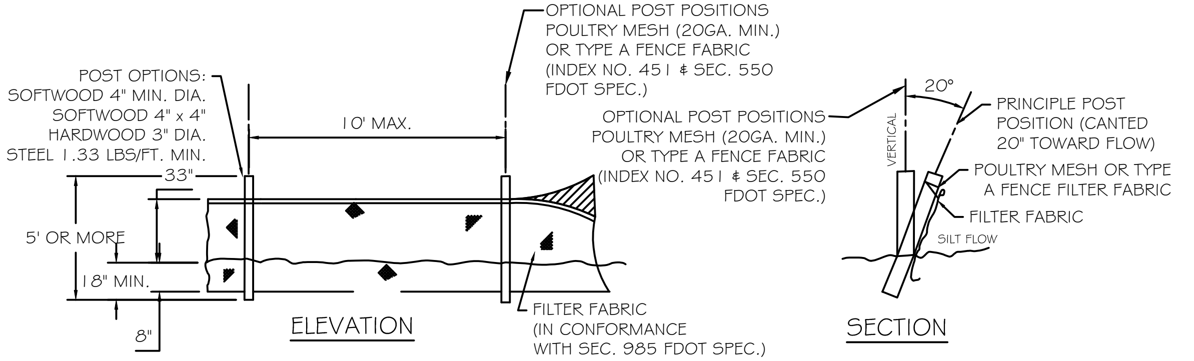

TYPE IV SILT FENCE

NOT TO SCALE

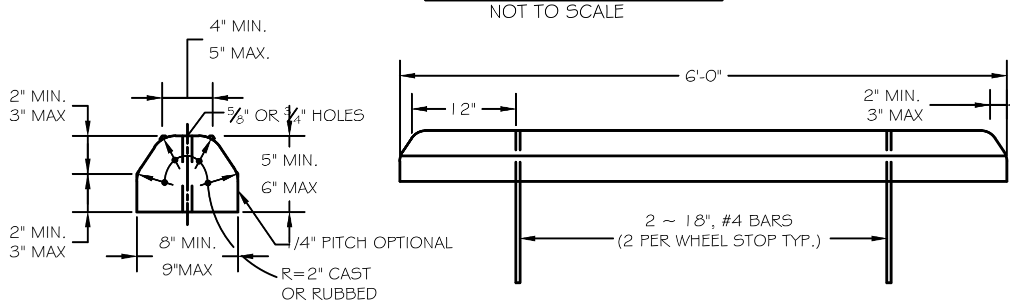

WHEEL STOP DETAIL

NOT TO SCALE

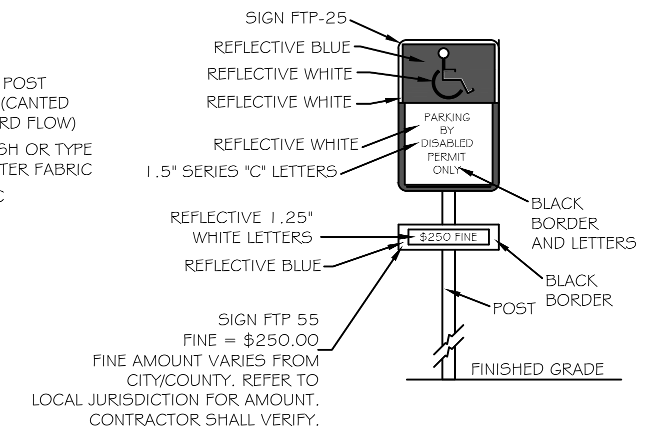

SIGN NOTES:

1. SIGN CONSTRUCTION, DESIGN AND PLACEMENT SHALL COMPLY WITH STATE AND LOCAL STATUES.

HANDICAP PARKING SIGN DETAIL

NOT TO SCALE

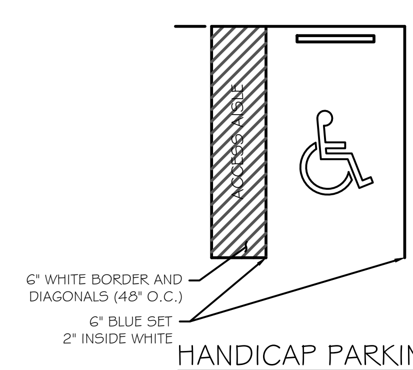

1. SIGN SHALL BE PLACED IN FRONT OF ALL DESIGNATED HANDICAPPED SPACES. SIGN HEIGHT SHALL BE 7' FROM PAVEMENT TO BOTTOM OF SIGN.
2. 5' HANDICAPPED AISLE MAY BE PLACED ON THE RIGHT OR LEFT SIDE OF PARKING STALL.
3. HANDICAPPED PARKING SYMBOL SHALL BE 3 OR 5 FT. HIGH.
4. BLUE PAVEMENT MARKINGS SHALL BE TINTED TO MATCH SHADE 15180 OF FEDERAL STANDARDS 595A.

HANDICAP PARKING STALL DETAIL

NOT TO SCALE

ENGINEER'S NOTES

1. CONTRACTOR SHALL VERIFY ALL EXISTING CONDITIONS AND DIMENSIONS AT THE JOB SITE PRIOR TO CONSTRUCTION TO ENSURE THAT ALL WORK WILL FIT IN THE MANNER INTENDED ON THE PLANS. SHOULD ANY CONDITIONS EXIST THAT ARE CONTRARY TO THOSE SHOWN ON THE PLANS, THE CONTRACTOR SHALL NOTIFY THE ENGINEER OF SAID DIFFERENCES IMMEDIATELY AND PRIOR TO PROCEEDING WITH THE WORK.
2. ALL DISTURBED AREAS SHALL BE SEEDED WITH A MIXTURE OF LONG-TERM VEGETATION AND SHORT-TERM VEGETATION. THE LONG-TERM VEGETATION SHALL BE APPLIED AT A MINIMUM RATE OF 70 POUNDS PER ACRE. THE SHORT-TERM VEGETATION SHALL BE APPLIED AT A MINIMUM RATE OF 20 POUNDS PER ACRE AND SHALL CONSIST OF WINTER RYE FROM SEPTEMBER THROUGH MARCH OR MILLET FROM APRIL THROUGH AUGUST.
3. THE PERMITTEE/CONTRACTOR SHALL INSTITUTE NECESSARY MEASURES DURING CONSTRUCTION TO MINIMIZE EROSION, TURBIDITY, NUTRIENT LOADING, AND SEDIMENTATION TO ADJACENT LANDS AND IN THE RECEIVING WATER.
4. ALL GRADES MAY BE ADJUSTED IN THE FIELD A MAXIMUM OF SIX (6) INCHES AS LONG AS THE FLOW OF WATER IS NOT CHANGED.
5. WHERE DITCH MUST BE DEEPER THAN NORMAL TO ACCOMMODATE A PIPE, THE TRANSITION FROM NORMAL DITCH GRADE TO PIPE FLOW LINE SHALL BE A MINIMUM LENGTH OF 100 FEET.
6. THE CONTRACTOR SHALL ADHERE TO THE EROSION AND SEDIMENTATION CONTROL PLAN PRIOR TO THE COMMENCEMENT OF ANY CONSTRUCTION UNTIL THE AS-BUILTS ARE COMPLETED.
7. QUANTITIES ARE ESTIMATES ONLY. CONTRACTOR SHALL VERIFY QUALITIES PRIOR TO BID AND CONSTRUCTION.
8. NO FILL SHALL BE PLACED ON EXISTING GROUND UNTIL THE GROUND HAS BEEN CLEARED OF WEEDS, DEBRIS, TOPSOIL AND OTHER DELETERIOUS MATERIAL.

UNAUTHORIZED CHANGES AND USES CAUTION:

THE ENGINEER PREPARING THESE PLANS WILL NOT BE RESPONSIBLE FOR, OR LIABLE FOR, UNAUTHORIZED CHANGES TO OR USES OF THESE PLANS. ALL CHANGES TO THE PLANS MUST BE IN WRITING AND MUST BE APPROVED BY THE PREPARER OF THESE PLANS.

THE PRIVATE ENGINEER SIGNING THESE PLANS IS RESPONSIBLE FOR ASSURING THE ACCURACY AND ACCEPTABILITY OF THE DESIGN HEREON. IN THE EVENT OF DISCREPANCIES ARISING DURING CONSTRUCTION, THE PRIVATE ENGINEER SHALL BE RESPONSIBLE FOR DETERMINING AN ACCEPTABLE SOLUTION AND REVISING THE PLANS FOR APPROVAL BY THE GOVERNING AGENCIES.

PRIVATE ENGINEER'S NOTICE TO CONTRACTOR:

THE CONSTRUCTION CONTRACTOR AGREES THAT IN ACCORDANCE WITH GENERALLY ACCEPTED CONSTRUCTION PRACTICES, HE/SHE WILL BE REQUIRED TO ASSUME SOLE AND COMPLETE RESPONSIBILITY FOR JOB SITE CONDITIONS DURING THE COURSE OF CONSTRUCTION OF THE PROJECT, INCLUDING THE SAFETY OF ALL PERSONS AND PROPERTY. THIS REQUIREMENT SHALL APPLY CONTINUOUSLY AND NOT BE LIMITED TO NORMAL WORKING HOURS. THE CONSTRUCTION CONTRACTOR FURTHER AGREES TO DEFEND, INDEMNIFY AND HOLD DESIGN PROFESSIONAL HARMLESS FROM ANY AND ALL LIABILITY, REAL OR ALLEGED, IN CONNECTION WITH THE PERFORMANCE OF WORK ON THIS PROJECT, EXCEPTING LIABILITY ARISING FROM THE SOLE NEGLIGENCE OF THE DESIGN PROFESSIONAL.

EROSION CONTROL NOTES

1. EROSION AND SEDIMENTATION CONTROL SHALL COMPLY WITH THE REQUIREMENTS OF THE "FLORIDA DEVELOPMENT MANUAL" AND THE "FLORIDA EROSION AND SEDIMENT CONTROL INSPECTOR'S MANUAL"
2. THE CONTRACTOR SHALL ADHERE TO THE FLORIDA DEPARTMENT OF TRANSPORTATION, SUWANNEE RIVER WATER MANAGEMENT DISTRICT, COLUMBIA COUNTY AND OTHER GOVERNING AUTHORITIES FOR EROSION AND SEDIMENT CONTROL REGULATIONS.
3. THE CONTRACTOR SHALL ADJUST AND REVISE CONTROL MEASURES SHOWN ON THESE PLANS TO MEET ACTUAL FIELD CONDITIONS. ANY REVISIONS SHALL BE APPROVED BY THE REVIEWING AGENCIES.
4. EROSION AND SEDIMENT CONTROL MEASURES SHALL BE INSTALLED PRIOR TO ANY OTHER CONSTRUCTION.
5. EROSION AND SEDIMENT CONTROL MEASURES SHALL NOT BE REMOVED UNTIL ALL CONSTRUCTION IS COMPLETE AND UNTIL A PERMANENT GROUND COVER HAS BEEN ESTABLISHED.
6. ALL OPEN DRAINAGE SWALES SHALL BE GRASSED AND RIPRAP SHALL BE PLACED AS REQUIRED TO CONTROL EROSION.
7. SILT FENCES SHALL BE LOCATED ON SITE TO PREVENT SEDIMENT FROM LEAVING PROJECT LIMITS.
8. CONTRACTOR SHALL PLACE A DOUBLE ROW OF SILT FENCE IN AREAS WHERE RUNOFF FROM DISTURBED AREAS MAY ENTER WETLANDS.
9. DURING CONSTRUCTION AND AFTER CONSTRUCTION IS COMPLETE, ALL STRUCTURES SHALL BE CLEANED OF ALL DEBRIS AND EXCESS SEDIMENT.
10. ALL GRADED AREAS SHALL BE STABILIZED IMMEDIATELY WITH A TEMPORARY FAST-GROWING COVER AND/OR MULCH.
11. A PAD OF RUBBLE RIP RAP SHALL BE PLACED AT THE BOTTOM OF ALL COLLECTION FLUMES AND COLLECTION PIPE OUTLETS. GRANITE OR LIMESTONE RIPRAP IS REQUIRED, NO BROKEN CONCRETE WILL BE ACCEPTED.
12. ALL SIDE SLOPES STEEPER THAN 3:1 SHALL BE ADEQUATELY PROTECTED FROM EROSION THROUGH THE USE OF HAY BALES OR SODDING.
13. ALL STABILIZATION PRACTICES SHALL BE INITIATED AS SOON AS PRACTICABLE IN AREAS OF THE JOB WHERE CONSTRUCTION ACTIVITIES HAVE TEMPORARILY OR PERMANENTLY STOPPED, BUT IN NO CASE SHALL THE DISTURBED AREA BE LEFT UNPROTECTED FOR MORE THAN SEVEN DAYS.
14. ALL WASTE GENERATED ON THE PROJECT SHALL BE DISPOSED OF BY THE CONTRACTOR IN AREAS PROVIDED BY CONTRACTOR.
15. LOADED HAUL TRUCKS SHALL BE COVERED WITH TARPS.
16. EXCESS DIRT SHALL BE REMOVED DAILY.
17. THIS PROJECT SHALL COMPLY WITH ALL WATER QUALITY STANDARDS.
18. QUALIFIED PERSONNEL SHALL INSPECT THE AREA USED FOR STORAGE OF STOCKPILES, THE SILT FENCE AND STRAW BALES, THE LOCATION WHERE VEHICLES ENTER OR EXIT THE SITE, AND THE DISTURBED AREAS THAT HAVE NOT BEEN FINALLY STABILIZED, AT LEAST ONCE EVERY SEVEN CALENDAR DAYS AND WITHIN 24 HOURS OF THE END OF A STORM OF 0.25 INCHES OR GREATER.
19. SITES THAT HAVE BEEN FINALLY STABILIZED WITH SOD OR GRASSING SHALL BE INSPECTED AT LEAST ONCE EVERY WEEK.

LEGEND

INV.	INVERT
F.G.	FINISHED GOUND
E.G.	EXISTING GROUND
F.S.	FINISHED SURFACE
E.S.	EXISTING SURFACE
130	PROPOSED CONTOUR (2' INTERVALS)
(130)	EXISTING CONTOUR (2' INTERVALS)
	DAYLIGHT LINE
W W	EX. WATER LINE
	EX. SWALE/FLOWLINE
	EX. CULVERT W/ M.E.S.
OP OP	EX. OVERHEAD POWER
	PROPERTY/R-O-W LINE
	EASEMENT
	EX. CHAINLINK FENCE LINE
	EX. STRUCTURE
	EX. CONCRETE
	EX. ASPHALT
	EX. GRAVEL SURFACE
W	EX. WATER METER PIT
	EX. FIRE HYDRANT
	EX. GATE VALVE
	EX. POWER POLE
	EX. TRANSFORMER
SS SS	PR. SANITARY SEWER SERVICE
W W	PR. WATER LINE
WS WS	PR. WATER SERVICE
	PR. SWALE/FLOWLINE
	PR. CULVERT
UP UP	PR. UNDERGROUND POWER
W	PR. WATER METER PIT
	PR. FIRE HYDRANT
	PR. GATE VALVE
	PR. 22 1/2° BEND
	PR. 45° BEND
	PR. TEE
	PR. REDUCER
	PR. TRANSFORMER SINGLE PHASE
	PR. CHAINLINK FENCE LINE
SF SF	PR. SILT FENCE
	PR. STRUCTURE
	PR. CONCRETE
	PR. GRASS
	PR. ASPHALT

NOTE: ALL UTILITY PROVIDERS MUST BE CONTACTED PRIOR TO DIGGING IN ACCORDANCE TO CHAPTER 556 "SUNSHINE STATE ONE CALL" CALL 811 48 HOURS PRIOR TO DIGGING

Sunshine 811

CAROL J. CHADWICK LICENSE No. 82560 STATE OF FLORIDA PROFESSIONAL ENGINEER

Carol Chadwick, PE cn=Carol Chadwick, PE, o=This item has been electronically signed and sealed by Carol Chadwick, PE using a digital signature., ou, email=ccpewyo@gmail.com, c=US 2020.06.15 15:35:37 -04'00'

CAROL CHADWICK P.E.
1208 S.W. Fairfax Glen
Lake City, FL 32025
307.680.1772
ccpewyo@gmail.com
www.carolchadwickpe.com
FLORIDA ♦ WYOMING ♦ OREGON ♦ CALIFORNIA ♦ N.C.E.E.S.

REVISION DESCRIPTION | DATE

PREPARED FOR
NEW GEN. CHRISTIAN SCHOOL
608 SW MARVIN BURNETT RD.
LAKE CITY, FL 32025
386.758.4710
CONTACT: PAULA MILLER
pmiller@newgenerationschool.org

NEW GENERATION CHRISTIAN SCHOOL
NOTES, LEGEND ⸗ DETAILS

PROJECT NO. FL19041 | DATE JUNE 14, 2020 | REVISION DATE | SHEET 2 OF 7 SHEETS

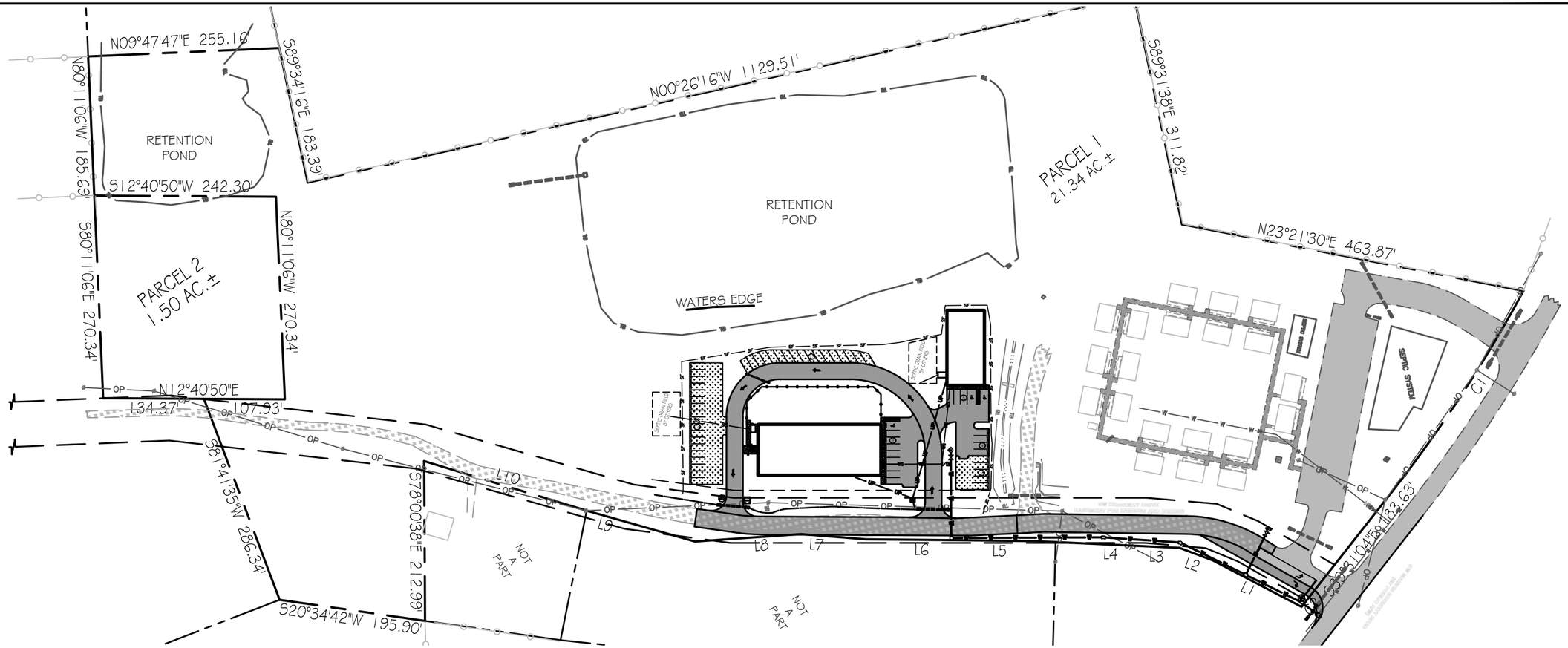

DEVELOPMENT INFORMATION

[illegible]

PROPERTY AREA	SQUARE FEET	ACRES	% OF SITE
[illegible]	[illegible]	[illegible]	[illegible]
[illegible]	[illegible]	[illegible]	[illegible]
[illegible]	[illegible]	[illegible]	[illegible]
EXISTING IMPERVIOUS AREA			
[illegible]	[illegible]	[illegible]	[illegible]
PROPOSED IMPERVIOUS AREA			
[illegible]	[illegible]	[illegible]	[illegible]
[illegible]	[illegible]	[illegible]	[illegible]
[illegible]	[illegible]	[illegible]	[illegible]
[illegible]	[illegible]	[illegible]	[illegible]
[illegible]	[illegible]	[illegible]	[illegible]

LANDSCAPING

[illegible]

BUFFER

[illegible]

PARKING

[illegible]

LINE TABLE		
LINE	BEARING	DISTANCE
L1	S 39°56'26" W	134.06'
L2	S 32°50'06" W	46.82'
L3	S 15°06'06" W	81.34'
L4	S 15°00'11" W	109.35'
L5	S 13°00'47" W	102.73'
L6	S 12°54'16" W	125.23'
L7	S 16°50'51" W	86.89'
L8	S 08°21'24" W	141.57'
L9	S 28°12'10" W	150.13'
L10	S 29°17'53" W	226.55'

CURVE TABLE					
CURVE	RADIUS	DELTA ANGLE	ARC LENGTH	CHORD BEARING	CHORD LENGTH
C1	1869.83'	9°47'42"	319.65'	S 44°29'32" E	319.26'
C2	994.93'	0°42'35"	12.32'	S 39°25'30" E	12.32'

0 75 150
SCALE 1"=150'

Sunshine811

Carol Chadwick, PE
cn=Carol Chadwick, PE, o=This item has been electronically signed and sealed by Carol Chadwick, PE using a digital signature., ou, email=ccpewyo@gmail.com, c=US
2020.06.15 15:35:12 -04'00'

CAROL CHADWICK, P.E.
608 SW Hamilton Circle
Lake City, FL 32025
386.758.4710
ccpewyo@gmail.com
www.carolchadwickpe.com
FLORIDA ♦ WYOMING ♦ NORTH CAROLINA ♦ OREGON ♦ CALIFORNIA ♦ N.C.E.E.S.

CAROL J. CHADWICK
LICENSE No. 82560
STATE OF FLORIDA
PROFESSIONAL ENGINEER

REVISION DESCRIPTION
DATE

PREPARED FOR
NEW GEN. CHRISTIAN SCHOOL
608 SW MARVIN BURNETT RD.
LAKE CITY, FL 32025
386.758.4710
CONTACT: PAULA MILLER
pmiller@newgenerationschool.org

NEW GENERATION CHRISTIAN SCHOOL
OVERALL SITE PLAN

PROJECT NO. FL19041
DATE JUNE 14, 2020
REVISION DATE
SHEET 3 OF 7

C:\CONSULTING\JOB FILES\NEW GENERATION SCHOOL\FL19041\DWGS\PLANS\FL19041-03-SITE.dwg, 6/15/2020 2:36:32 PM

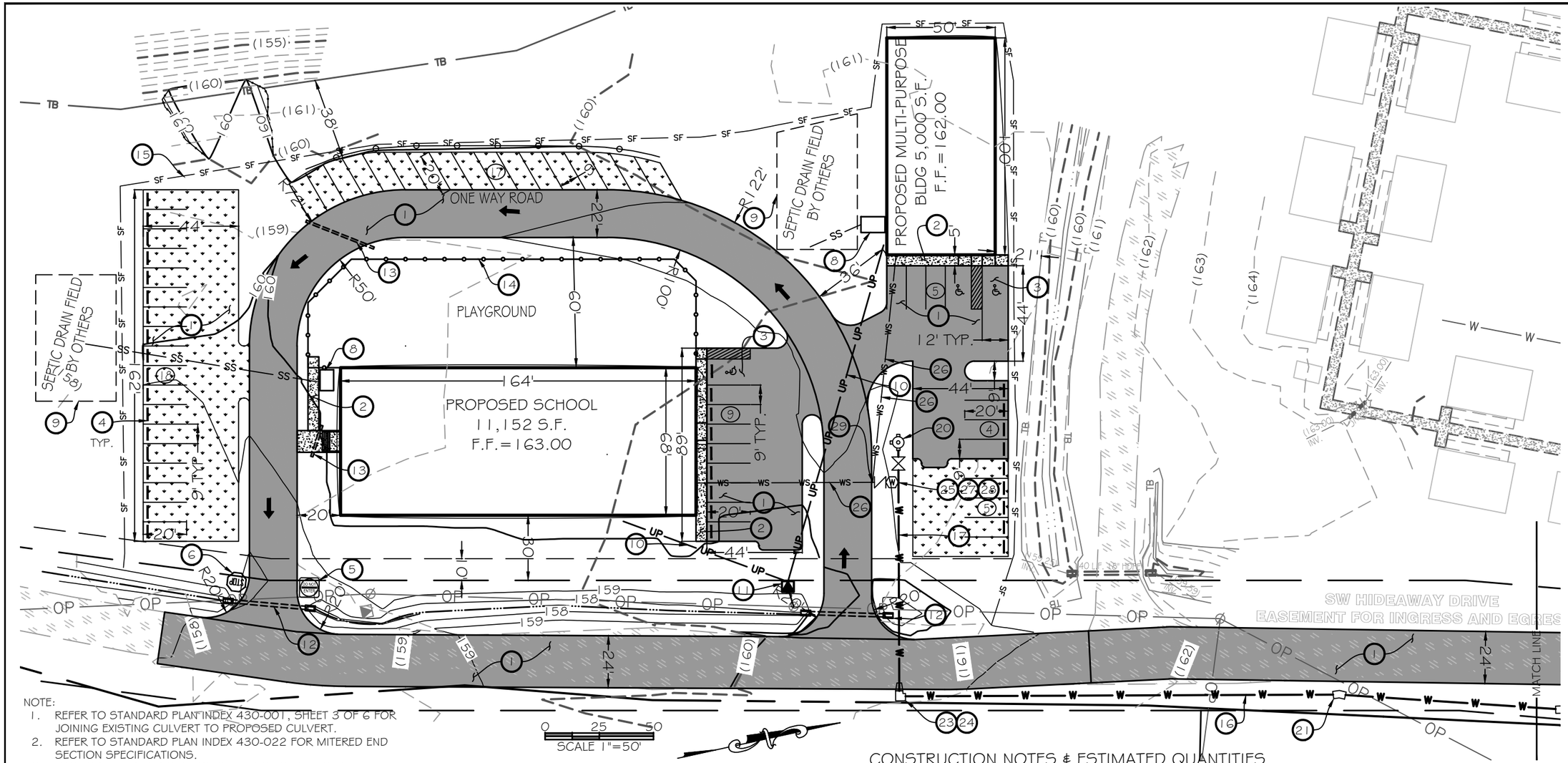

NOTE:
1. REFER TO STANDARD PLAN INDEX 430-001, SHEET 3 OF 6 FOR JOINING EXISTING CULVERT TO PROPOSED CULVERT.
2. REFER TO STANDARD PLAN INDEX 430-022 FOR MITERED END SECTION SPECIFICATIONS.
3. EXISTING MITER END SECTION SHALL NOT BE RE-USED.

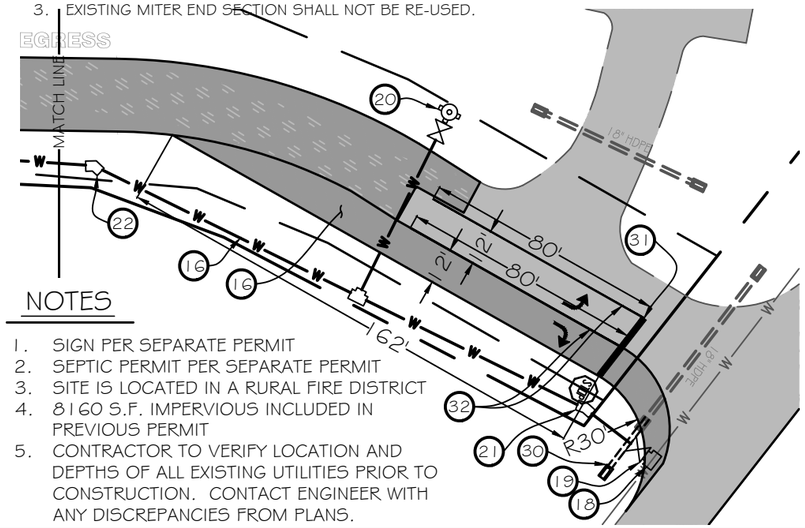

NOTES

1. SIGN PER SEPARATE PERMIT
2. SEPTIC PERMIT PER SEPARATE PERMIT
3. SITE IS LOCATED IN A RURAL FIRE DISTRICT
4. 8160 S.F. IMPERVIOUS INCLUDED IN PREVIOUS PERMIT
5. CONTRACTOR TO VERIFY LOCATION AND DEPTHS OF ALL EXISTING UTILITIES PRIOR TO CONSTRUCTION. CONTACT ENGINEER WITH ANY DISCREPANCIES FROM PLANS.

CONSTRUCTION NOTES & ESTIMATED QUANTITIES

1	INSTALL 1-1/2" AC PAVEMENT OVER 6" LIMEROCK BASE	42,635 S.F.
2	5' SIDEWALK	1095 S.F.
3	HANDICAP PARKING SIGN, RAMP AND STALL PER DETAIL ON SHEET 2	3 EA.
4	WHEEL STOP PER DETAIL ON SHEET 2	16 EA.
5	"DO NOT ENTER" SIGN PER MUTCD, R5-1	1 EA.
6	STOP SIGN PER MUTCD, R1-1	2 EA.
8	SEPTIC TANK PER SEPARATE PERMIT	2 EA.
9	SEPTIC DRAIN FIELD PER SEPARATE PERMIT	2 EA.
10	ELECTRIC SERVICE	2 EA.
11	TRANSFORMER	1 EA.
12	18" H.D.P.E. CULVERT WITH MITERED END SECTIONS	2 EA.
13	12" P.V.C. DRAIN	2 EA.
14	FENCE	276 L.F.
15	INSTALL SILT FENCE PER DETAIL ON SHEET 2	960 EA.
16	8" C900 P.V.C. WATER MAIN	330 L.F.
17	6" C900 P.V.C. WATER MAIN	107 L.F.
18	12"x8" TEE	1 EA.
19	8" GATE VALVE	1 EA.
20	FIRE HYDRANT ASSEMBLY	2 EA.
21	8" 22.5° BEND	2 EA.
22	8" 45° BEND	1 EA.
23	8" 90° BEND	1 EA.
24	8"x6" REDUCER	1 EA.
25	6"x2" TEE	1 EA.
26	2" WATER SERVICE	190 L.F.
27	2" WATER METER	1 EA.
28	BACK FLOW PREVENTOR	1 EA.
29	2"x2" TEE	1 EA.
30	EXTEND H.D.P.E. CULVERT PER FDOT INDEX 430-001	1 EA.
31	24" WHITE STOP BAR PER FDOT INDEX 711-001	24 L.F.
32	6" SOLID WHITE STRIPING PER FDOT INDEX 711-001	160 L.F.
33	DIRECTIONAL AREA STRIPING PER FDOT INDEX 711-001	2 EA.

Sunshine811

Carol Chadwick, PE
cn=Carol Chadwick, PE, o=This item has been electronically signed and sealed by Carol Chadwick, PE using a digital signature., ou, email=ccpewyo@gmail.com, c=US
2020.06.15 15:34:47 -04'00'

CAROL CHADWICK, P.E.
6208 S.W. Hamilton Circle
Lake City, FL 32025
No. 82560
Certificate of Authorization #
S.I.B. No. 3
www.carolchadwickpe.com
ccpewyo@gmail.com
FLORIDA ♦ WYOMING
OREGON ♦ CALIFORNIA ♦ N.C.E.E.S.

CAROL J. CHADWICK
LICENSE No. 82560
STATE OF FLORIDA
PROFESSIONAL ENGINEER

REVISION DESCRIPTION
DATE

PREPARED FOR
NEW GEN. CHRISTIAN SCHOOL
608 SW MARVIN BURNETT RD.
LAKE CITY, FL 32025
386.758.4710
CONTACT: PAULA MILLER
pmiller@newgenerationschool.org

NEW GENERATION CHRISTIAN SCHOOL
SITE & DIMENSION PLAN

PROJECT NO. FL19041
DATE JUNE 28, 2020
REVISION DATE
SHEET 4 OF 7 SHEETS

C:\CONSULTING\DB FILES\NEW GENERATION SCHOOL\FL19041\DWGS\PLANS\FL19041-04-DIM.dwg, 6/15/2020 1:54:50 PM

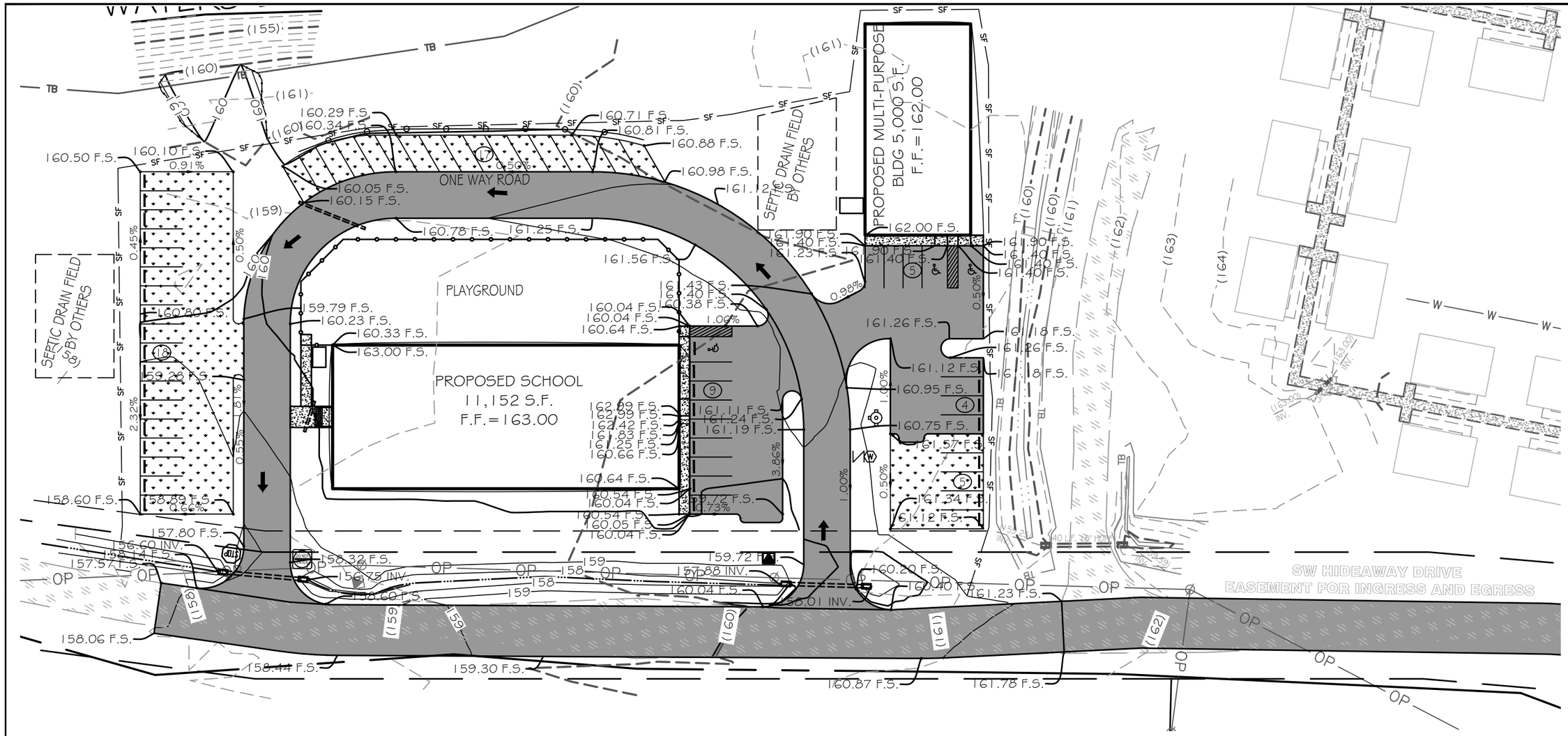

0 25 50
SCALE 1"=50'

Carol Chadwick, PE
cn=Carol Chadwick, PE, o=This item has been electronically signed and sealed by Carol Chadwick, PE using a digital signature., ou, email=ccpewyo@gmail.com, c=US
2020.06.15 15:34:26 -04'00'

CAROL CHADWICK, P.E.
Cpe Wyoming, Inc.
608 S.W. Hamilton Circle
Lake City, FL 32025
386.755.7171
www.carolchadwickpe.com
FLORIDA ♦ WYOMING ♦ N.C.E.E.S.
OREGON ♦ CALIFORNIA ♦ N.C.E.E.S.

CAROL J. CHADWICK
LICENSE No. 82560
STATE OF FLORIDA
PROFESSIONAL ENGINEER

REVISION DESCRIPTION
DATE

PREPARED FOR
NEW GEN. CHRISTIAN SCHOOL
608 SW MARVIN BURNETT RD.
LAKE CITY, FL 32025
386.758.4710
CONTACT: PAULA MILLER
pmiller@newgenerationschool.org

NEW GENERATION CHRISTIAN SCHOOL
GRADING PLAN

PROJECT NO.	DATE	REVISION DATE	SHEET
FL19041	JUNE 14, 2020		5 OF 7

C:\CONSULTING\JOB FILES\NEW GENERATION SCHOOL\FL19041\DWGS\PLANS\FL19041-05-GRADING.dwg, 6/15/2020 1:52:56 PM

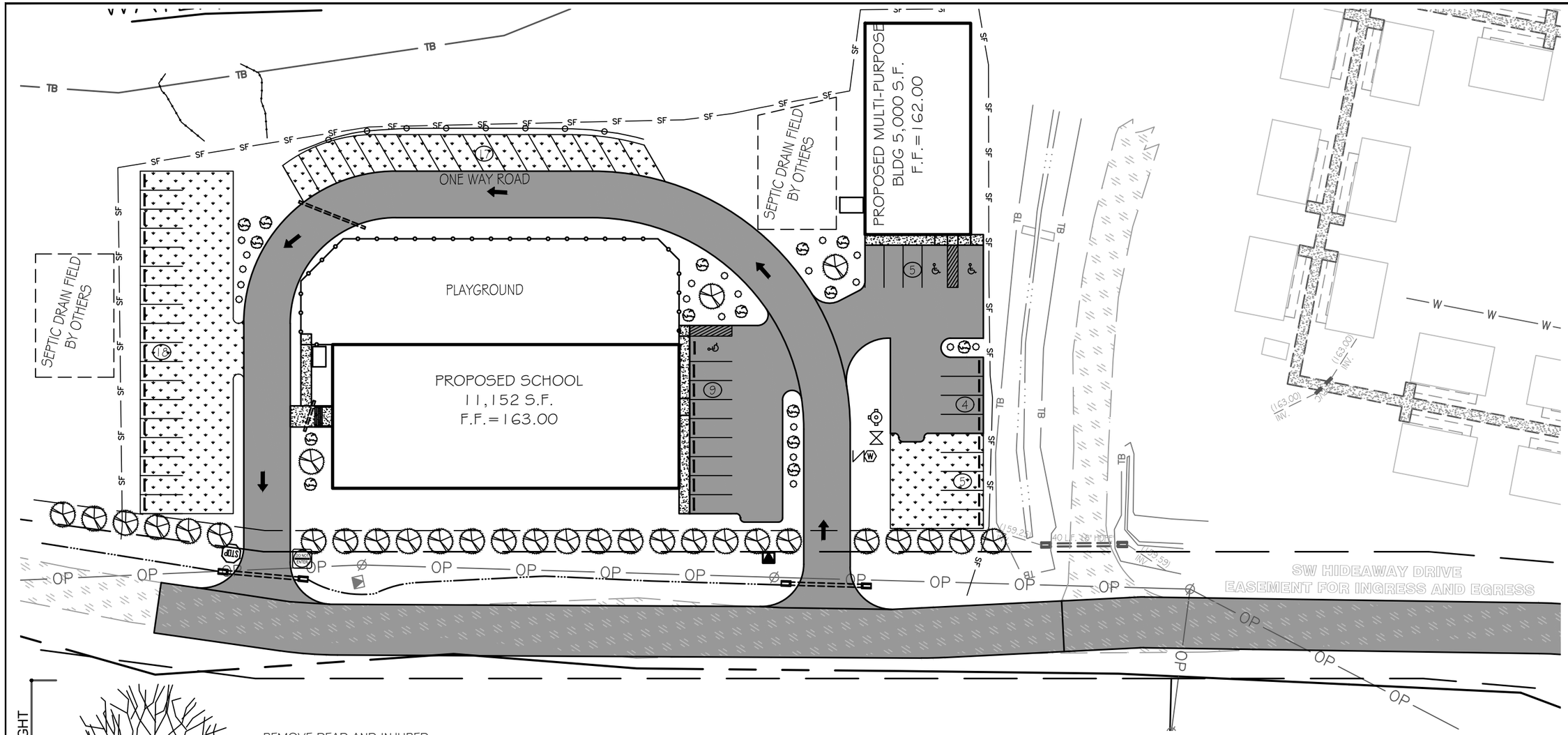

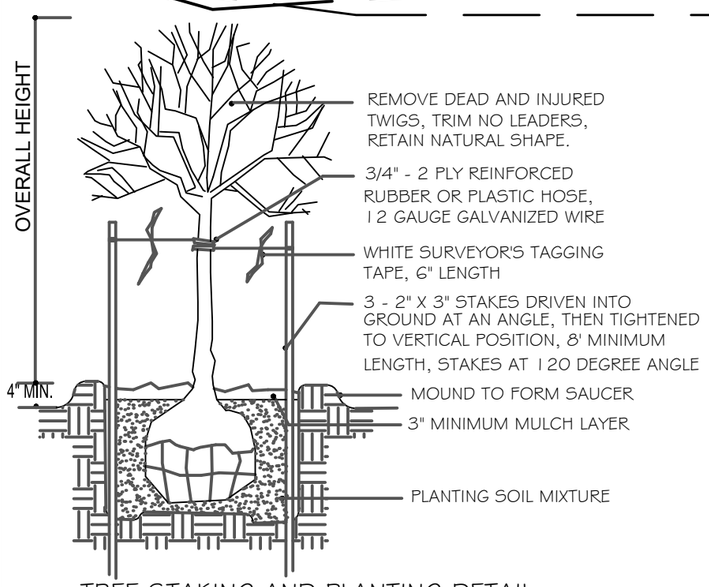

TREE STAKING AND PLANTING DETAIL

NOT TO SCALE

PLANT SCHEDULE

SYMBOL	PLANT TYPE	QTY	HEIGHT	SIZE, GALLON
	HOLLY TREE VIBURNUM TREE LIGUSTRUM TREE	30	8' - 10'	45
	AZALEAS SHRUB PODOCARPUS SHRUB LAURA PENDULUM SHRUB	15	18" - 20"	3
	ASIAN JASMINE WEDELIA BOX WOOD IVY	18	12"	1

Sunshine811

LANDSCAPE NOTES

(a) ALL PLANT MATERIAL TO BE FLORIDA No. 1 QUALITY
(b) A MINIMUM OF 3" OF MULCH IN ALL PLANT BEDS
(c) 100% IRRIGATION COVERAGE REQUIRED
(d) STAKING REQUIRED FOR ALL SINGLE-TRUNK TREES
(e) A 3' "RING" OF MULCH TO BE MAINTAINED AROUND ALL TREES NOT INCORPORATED IN PLANT BEDS.
(f) LANDSCAPING REQUIRED AROUND ALL BACKFLOW DEVICES
(g) UNOBSTRUCTED VISIBILITY REQUIRED WITHIN SITE VISIBILITY TRIANGLE (INDICATE WITH DIAGRAM, FIGURE 33.01)
(h) PROTECTION REQUIRED FOR EXISTING TREES TO BE SAVED DURING CONSTRUCTION. DIAGRAM OF TREE PROTECTION PLAN REQUIRED
(i) ALL PLANT BEDS TO BE FREE OF LIME ROCK, CONSTRUCTION DEBRIS, AND ANY IMPERVIOUS MATERIAL. EXCAVATION AND BACKFILLING MAY BE REQUIRED
(j) THE OWNER/DEVELOPER IS RESPONSIBLE FOR THE ESTABLISHMENT AND MAINTENANCE OF ALL PLANT MATERIAL. LANDSCAPE AREAS MUST BE MAINTAINED TO PRESENT A HEALTHY, NEAT AND ORDERLY APPEARANCE AT ALL TIMES AND SHALL BE KEPT FREE OF TRASH AND DEBRIS

0 25 50
SCALE 1"=50'

CAROL J. CHADWICK LICENSE No. 82560 STATE OF FLORIDA PROFESSIONAL ENGINEER

Carol Chadwick, PE
cn=Carol Chadwick, PE, o=This item has been electronically signed and sealed by Carol Chadwick, PE using a digital signature., ou, email=ccpewyo@gmail.com, c=US
2020.06.15 15:34:01 -04'00'

CAROL CHADWICK, P.E.
Cpe Wyo Consultants, Corp.
6068 SW Hamilton Circle
Lake City, FL 32025
386.752.7711
www.cpewyoconsultants.com
FLORIDA • WYOMING • N.C.E.E.S.
OREGON • CALIFORNIA • N.C.E.E.S.

CAROL J. CHADWICK LICENSE No. 82560 STATE OF FLORIDA PROFESSIONAL ENGINEER

REVISION DESCRIPTION	DATE

PREPARED FOR
NEW GEN. CHRISTIAN SCHOOL
608 SW MARVIN BURNETT RD.
LAKE CITY, FL 32025
386.758.4710
CONTACT: PAULA MILLER
pmiller@newgenerationschool.org

NEW GENERATION CHRISTIAN SCHOOL
LANDSCAPE PLAN

PROJECT NO. FL19041
DATE JUNE 14, 2020
REVISION DATE
SHEET 6 OF 7 SHEETS

C:\CONSULTING\JOB FILES\NEW GENERATION SCHOOL\FL19041\DWGS\PLANS\FL19041-06-LANDSCAPING.dwg, 6/15/2020 1:39:45 PM

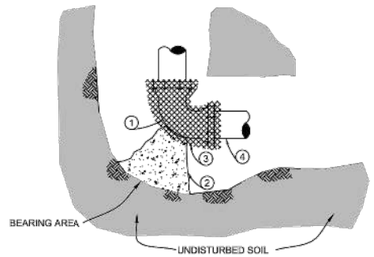

MATERIALS		
ITEM	DESCRIPTION	
1	90°, 45°, 22-1/2°, 11-1/4° BEND	D.I. MJ
2	CONCRETE	2500 PSI MIN. (FDOT CLASS I)
3	VISQUEEN or FELT	8 MILS THICKNESS (MIN.) or 15 lb (MIN.)
4	PIPE	

NOTES:

1. SEE W-2.2 DATA FOR THE BEARING AREA FOR THE CONCRETE REACTION BLOCK.
2. A NON-POROUS MATERIAL SHALL BE PLACED AROUND THE ENTIRE FITTING TO PROTECT THE BOLTS FROM THE CONCRETE.
3. LOCATING WIRE REQUIRED ON ALL PLASTIC WATER MAINS.
4. MECHANICAL RESTRAINT IS REQUIRED IN ALL CASES, UNLESS USE OF A THRUST BLOCK FOR AN EXISTING WATER MAIN IS APPROVED ON A CASE BY CASE BASIS IN WRITING BY GRU WATER & WASTEWATER ENGINEERING.

THRUST BLOCK - BEND

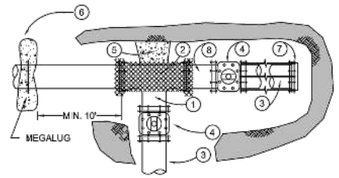

MATERIALS		
ITEM	DESCRIPTION	
1	ANCHOR TEE	D.I., M.J.
2	VISQUEEN or FELT	8 MILS THICKNESS (MIN.) or 15 lb (MIN.)
3	PIPE	
4	GATE VALVE	MJ x M.J., MEGALUG (OR APPROVED EQUAL)
5	CONCRETE THRUST BLOCK	2500 PSI MIN. (FDOT CLASS I)
6	CONCRETE WING BLOCK	2500 PSI MIN. (FDOT CLASS I) W/ MEGALUG OR APPROVED EQUAL
7	CAP	D.I., M.J., W/ MEGALUG (EBAA OR APPROVED EQUAL)
8	ANCHOR COUPLING	D.I., M.J., SOLID x SWIVEL

NOTES:

1. SEE W-2.2 FOR BEARING AREA REQUIRED.
2. A NONPOROUS MATERIAL 8 MILS (MIN.) VISQUEEN OR 15 lb (MIN.) FELT SHOULD BE PLACED BETWEEN THE CONCRETE AND ENTIRE FITTINGS.
3. LOCATING WIRE IS REQUIRED ON ALL PLASTIC WATER MAINS.
4. MECHANICAL RESTRAINT IS REQUIRED IN ALL CASES, UNLESS USE OF A THRUST BLOCK FOR AN EXISTING WATER MAIN IS APPROVED ON A CASE BY CASE BASIS IN WRITING BY GRU WATER & WASTEWATER ENGINEERING.

THRUST BLOCK - TEE

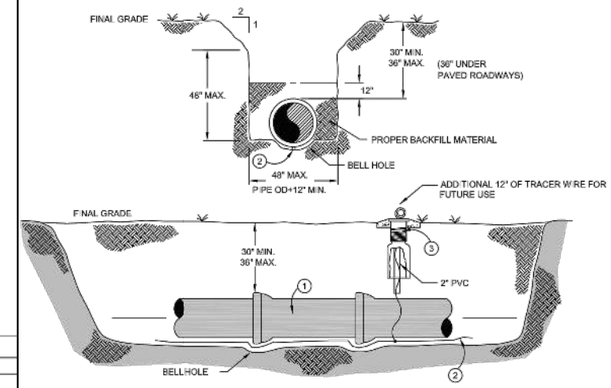

MATERIALS	
ITEM	DESCRIPTION
1	WATER MAIN PIPE
2	TRACER WIRE, BLUE, #10 AWG
3	VALVE BOX

NOTES:

1. PLASTIC PIPE SHALL REQUIRE AN INSULATED COPPER WIRE TAPED EVERY 10 FEET ON THE BOTTOM OF THE PIPE AND WRAPPED AROUND EACH FIRE HYDRANT AT FINAL GRADE. THE WIRE SHALL BE CONTINUOUS AND ALL SPLICES REQUIRE TRACER-LOCK PART #TL-LUG-SS CONNECTORS. TRACER WIRE SHALL CONTINUE ACROSS DIP SECTIONS OF PIPE, SUCH AS AT ROAD CROSSINGS.
2. DEPTH OF PIPE MAY BE FIELD ADJUSTED TO MEET SPECIAL CONDITIONS AS DETERMINED BY GRU ENGINEER OR INSPECTOR. PIPE INSTALLED WITH LESS THAN 30" OR GREATER THAN 36" OF COVER SHALL BE DIP.
3. VALVE BOX SHALL BE INSTALLED AT MAXIMUM 500 FT. INTERVALS FOR ACCESS FOR CONNECTION AND TESTING OF TRACER WIRE. COIL 12" OF TRACER WIRE INSIDE TOP OF VALVE BOX.

WATER MAIN CONSTRUCTION

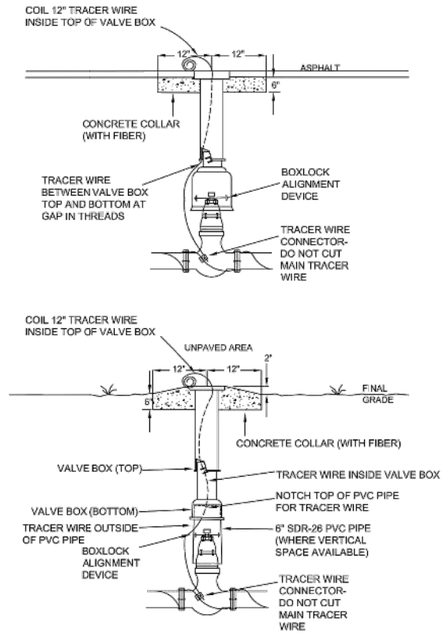

VALVE BOX

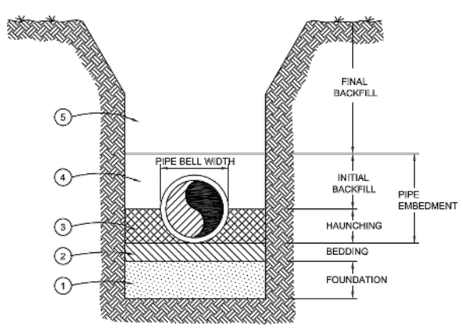

NOTES:

1. A FOUNDATION MAY BE REQUIRED IN VERY POOR SOIL (CLASS IV & V MATERIAL) CONDITIONS. FIELD DETERMINATION WILL BE PROVIDED BY GRU INSPECTOR. TYPICAL FOUNDATION THICKNESS SHALL BE 12", BUT MAY VARY ACCORDING TO NATURAL MATERIAL.
2. BEDDING IS REQUIRED PRIMARILY TO BRING THE TRENCH BOTTOM UP TO GRADE. BEDDING MATERIALS SHALL PROVIDE A UNIFORM AND ADEQUATE LONGITUDINAL SUPPORT UNDER THE PIPE. IN DRY SOIL CONDITIONS CLASS II OR CLASS III MATERIAL SHALL BE HAND PLACED 4" TO 6", LIGHTLY COMPACTED, UNIFORM AND NOT FINER THAN THE FOUNDATION MATERIAL. IN WET SOIL CONDITIONS CLASS I, CLASS II OR CLASS III SHALL BE HAND PLACED, 4" TO 6", UNIFORM AND NOT FINER THAN THE FOUNDATION MATERIAL. WHEN UTILIZING CLASS I MATERIAL, SUFFICIENT AMOUNTS OF CLASS II OR CLASS III MATERIAL SHALL BE ADDED TO FILL ALL VOIDS CREATED BY THE CLASS I MATERIAL.
3. HAUNCHING MATERIAL SHALL BE HAND PLACED TO THE SPRINGLINE OF THE PIPE. CLASS II OR CLASS III MATERIAL SHALL BE CONSOLIDATED UNDER THE PIPE AND HAND TAMPED TO PROVIDE ADEQUATE SIDE SUPPORT.
4. INITIAL BACKFILL MATERIAL SHALL BE CLASS II OR CLASS III. IT SHALL BE HAND PLACED TO 12" ABOVE THE TOP OF THE PIPE. THE SOIL SHALL BE CONSOLIDATED BY HAND TAMPING OR WALKING THE SOIL IN PLACE.
5. FINAL BACKFILL MATERIAL MAY BE MACHINE PLACED. THE MATERIAL SHALL BE CLASS II OR CLASS III MATERIAL. CLASS IV MATERIAL MAY BE INSTALLED OUTSIDE OF THE ROADWAY. FINAL BACKFILL UNDER ROADWAYS MAY REQUIRE SPECIAL COMPACTION AND DENSITY TESTS. REFER TO CITY, COUNTY, OR FDOT STANDARDS, AS APPLICABLE.

BACKFILL REQUIREMENTS

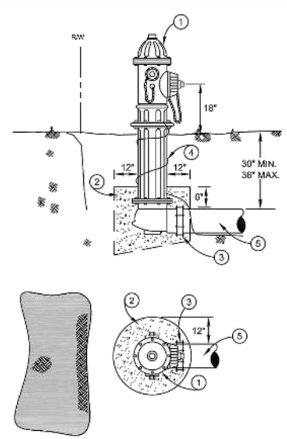

MATERIALS	
ITEM	DESCRIPTION
1	FIRE HYDRANT
2	GRAVEL DRAIN BED (No. 57 STONE)
3	MEGALUG RESTRAINT (EBAA OR APPROVED EQUAL)
4	TRACER WIRE, COPPER, BLUE INSULATED, #10 AWG
5	PIPE, D.I.

NOTES:

1. RESTRAIN MINIMUM 58' OF PIPE.

FIRE HYDRANT - DEAD END MAIN

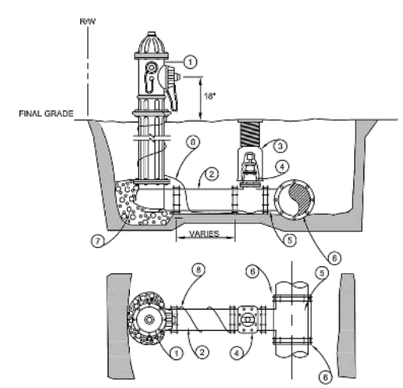

FIRE HYDRANT PERPENDICULAR TO THE MAIN

MATERIALS	
ITEM	DESCRIPTION
1	FIRE HYDRANT
2	ANCHOR COUPLING (RESTRAINED DIP FOR LONGER LENGTHS)
3	VALVE BOX, D.I.
4	GATE VALVE
5	ANCHOR TEE
6	MEGALUG - EBAA OR APPROVED EQUAL
7	GRAVEL DRAIN BED
8	TRACER WIRE, COPPER, BLUE INSULATED, #10 AWG

FIRE HYDRANT

Sunshine811

Carol Chadwick, PE
cn=Carol Chadwick, PE, o=This item has been electronically signed and sealed by Carol Chadwick, PE using a digital signature., ou, email=ccpewyo@gmail.com, c=US
2020.06.15 15:33:35 -04'00'

CAROL CHADWICK, P.E.
Carol J. Chadwick, P.E.
608 SW Eustrix Circle
Lake City, FL 32025
386.752.7171
ccpewyo@gmail.com
www.carolchadwickpe.com
CERTIFICATE OF AUTHORIZATION No. 8708
FLORIDA ♦ WYOMING ♦ NORTH CAROLINA ♦ OREGON ♦ CALIFORNIA ♦ NICARAGUA

CAROL J. CHADWICK LICENSE No. 82560 STATE OF FLORIDA PROFESSIONAL ENGINEER

REVISION DESCRIPTION
DATE

PREPARED FOR
NEW GEN. CHRISTIAN SCHOOL
608 SW MARVIN BURNETT RD.
LAKE CITY, FL 32025
386.758.4710
CONTACT: PAULA MILLER
pmiller@newgenerationschool.org

NEW GENERATION CHRISTIAN SCHOOL

WATER DETAILS

PROJECT NO. FL19041
DATE JUNE 14, 2020
REVISION DATE
SHEET 7 OF 7 SHEETS

C:\CONSULTING\JOB FILES\NEW GENERATION SCHOOL\FL19041\DWGS\PLANS\FL19041-07-WATER DETAILS.dwg, 6/15/2020 1:39:18 PM