Project Information for: L216061

Builder:	WOODMAN PARK	Date:	11/2/2006
Lot:	LOT 10 WILSON PLACE	Start Number:	**1043**
Subdivision:	N/A	SEI Ref:	L216061
County or City:	COLUMBIA COUNTY		
Truss Page Count:	64		

Truss Design Load Information (UNO) Design Program: MiTek

Gravity		Wind		Building Code:	FBC2004
Roof (psf):	42	Wind Standard:	**ASCE 7-02**		
Floor (psf):	55	Wind Speed (mph):	**110**		

Note: See individual truss drawings for special loading conditions

Building Designer, responsible for Structural Engineering: (See attached)

WOOD, WILLIAM G. CBC058182
Address: PO BOX 3535
LAKE CITY,FLORIDA 32056 Designer: **183**

Truss Design Engineer: Thomas, E. Miller, P.E., 56877 - Byron K. Anderson, PE FL 60987
Company: Structural Engineering and Inspections, Inc. EB 9196
Address 16105 N. Florida Ave, Ste B, Lutz, FL 33549 Phone: 813-849-5769

Notes:

1. Truss Design Engineer is responsible for the individual trusses as components only.
2. Determination as to the suitability and use of these truss components for the structure is the responsibility of the Building Designer of Record, as defined in ANSI/TPI
3. The seal date shown on the individual truss component drawings must match the seal date on this index sheet.
4. Trusses designed for veritcal loads only, unless noted otherwise.
5. Where hangers are shown, Carried Member hanger capacity per Simpson C-2006 (SYP/Full Nailing Value) as an individual component. Building Designer shall verify the suitablity and use of Carrying Member hanger capacity.

#	Truss ID	Dwg. #	Seal Date	#	Truss ID	Dwg. #	Seal Date
1	CJ1	1102061043	11/2/2006	41	T05A	1102061083	11/2/2006
2	CJ11A	1102061044	11/2/2006	42	T06	1102061084	11/2/2006
3	CJ1A	1102061045	11/2/2006	43	T06A	1102061085	11/2/2006
4	CJ1B	1102061046	11/2/2006	44	T06B	1102061086	11/2/2006
5	CJ1C	1102061047	11/2/2006	45	T07	1102061087	11/2/2006
6	CJ1D	1102061048	11/2/2006	46	T08	1102061088	11/2/2006
7	CJ1E	1102061049	11/2/2006	47	T09	1102061089	11/2/2006
8	CJ2	1102061050	11/2/2006	48	T10	1102061090	11/2/2006
9	CJ2A	1102061051	11/2/2006	49	T11	1102061091	11/2/2006
10	CJ2B	1102061052	11/2/2006	50	T12	1102061092	11/2/2006
11	CJ2C	1102061053	11/2/2006	51	T13	1102061093	11/2/2006
12	CJ2D	1102061054	11/2/2006	52	T14	1102061094	11/2/2006
13	CJ2E	1102061055	11/2/2006	53	T15	1102061095	11/2/2006
14	CJ3	1102061056	11/2/2006	54	T16	1102061096	11/2/2006
15	CJ3A	1102061057	11/2/2006	55	T17	1102061097	11/2/2006
16	CJ3B	1102061058	11/2/2006	56	T18	1102061098	11/2/2006
17	CJ3C	1102061059	11/2/2006	57	T19	1102061099	11/2/2006
18	CJ4	1102061060	11/2/2006	58	T19G	1102061100	11/2/2006
19	CJ4A	1102061061	11/2/2006	59	T20	1102061101	11/2/2006
20	CJ4B	1102061062	11/2/2006	60	T20G	1102061102	11/2/2006
21	CJ5	1102061063	11/2/2006	61	T21	1102061103	11/2/2006
22	CJ5A	1102061064	11/2/2006	62	T22	1102061104	11/2/2006
23	CJ6	1102061065	11/2/2006	63	T23	1102061105	11/2/2006
24	CJ6A	1102061066	11/2/2006	64	T24	1102061106	11/2/2006
25	CJ6B	1102061067	11/2/2006				
26	CJ9	1102061068	11/2/2006				
27	EJ4	1102061069	11/2/2006				
28	EJ5	1102061070	11/2/2006				
29	EJ7	1102061071	11/2/2006				
30	EJ7A	1102061072	11/2/2006				
31	HJ11	1102061073	11/2/2006				
32	HJ12	1102061074	11/2/2006				
33	HJ7	1102061075	11/2/2006				
34	HJ7A	1102061076	11/2/2006				
35	HJ8	1102061077	11/2/2006				
36	T01	1102061078	11/2/2006				
37	T02	1102061079	11/2/2006				
38	T03	1102061080	11/2/2006				
39	T04	1102061081	11/2/2006				
40	T05	1102061082	11/2/2006				

NOV 0 2 2006

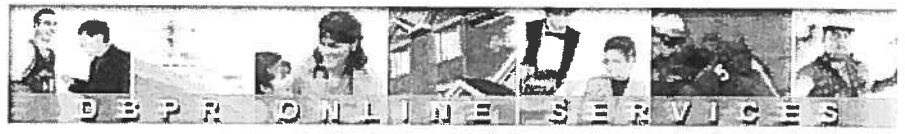

Licensee Details

Licensee Information

Name:	**WOOD, WILLIAM G (Primary Name)**
	WOODMAN PARK BUILDERS INC (DBA Nam
Main Address:	**P.O.BOX 3535** **LAKE CITY Florida 32026**
License Mailing:	
LicenseLocation:	**P.O.BOX 3535** **LAKE CITY FL 32026**

License Information

License Type:	**Certified Building Contractor**
Rank:	**Cert Building**
License Number:	**CBC058182**
Status:	**Current,Active**
Licensure Date:	**10/06/1997**
Expires:	**08/31/2006**

View Related License Information

View License Complaint

NOVEMBER 02, 2006 TRUSS DESIGN ENGINEER:
THOMAS E. MILLER PE 56877, BYRON K. ANDERSON PE 60987
STRUCTURAL ENGINEERING AND INSPECTIONS, INC. EB 9196
16105 N FLORIDA AVE. STE B, LUTZ, FL 33549

Dwg.#1102061043

Job	Truss	Truss Type	Qty	Ply	LINTON RESIDENCE
L216061	CJ1	JACK	1	1	Job Reference (optional)

Builders FirstSource, Lake City, Fl 32055

6.300 s Apr 19 2006 MiTek Industries, Inc. Wed Nov 01 14:03:40 2006 Page 1

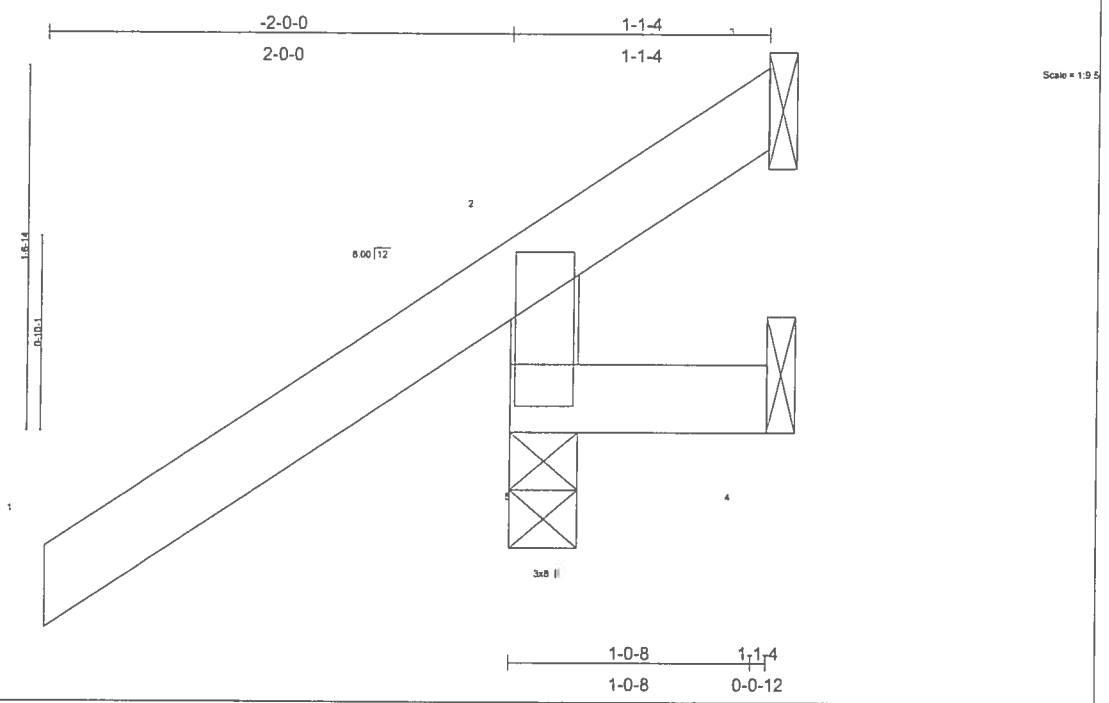

Plate Offsets (X,Y): [5:0-4-8,0-1-8]

LOADING (psf)		SPACING 2-0-0		CSI		DEFL	in	(loc)	l/defl	L/d	PLATES	GRIP
TCLL	20.0	Plates Increase	1.25	TC	0.33	Vert(LL)	0.00	5	>999	240	MT20	244/190
TCDL	7.0	Lumber increase	1.25	BC	0.06	Vert(TL)	0.00	5	>999	180		
BCLL	10.0	Rep Stress Incr	YES	WB	0.00	Horz(TL)	0.00	3	n/a	n/a		
BCDL	5.0	Code FBC2004/TPI2002		(Matrix)							Weight: 8 lb	

LUMBER
TOP CHORD 2 X 4 SYP No.2
BOT CHORD 2 X 4 SYP No.2
WEBS 2 X 4 SYP No.3

BRACING
TOP CHORD Structural wood sheathing directly applied or 1-1-4 oc purlins, except end verticals.
BOT CHORD Rigid ceiling directly applied or 10-0-0 oc bracing.

REACTIONS (lb/size) 5=287/0-3-8, 4=-22/Mechanical, 3=-70/Mechanical
Max Horz 5=122(load case 5)
Max Uplift5=-253(load case 5), 4=-22(load case 1), 3=-70(load case 1)
Max Grav 5=287(load case 1), 4=17(load case 5), 3=86(load case 5)

FORCES (lb) - Maximum Compression/Maximum Tension
TOP CHORD 2-5=-237/282, 1-2=0/64, 2-3=-67/56
BOT CHORD 4-5=0/0

NOTES
1) Wind: ASCE 7-02; 110mph (3-second gust); h=24ft; TCDL=4.2psf; BCDL=3.0psf; Category II; Exp B; enclosed; MWFRS gable end zone and C-C Exterior(2) zone; end vertical left exposed; Lumber DOL=1.60 plate grip DOL=1.60. This truss is designed for C-C for members and forces, and for MWFRS for reactions specified.
2) Refer to girder(s) for truss to truss connections.
3) Provide mechanical connection (by others) of truss to bearing plate capable of withstanding 253 lb uplift at joint 5, 22 lb uplift at joint 4 and 70 lb uplift at joint 3.

LOAD CASE(S) Standard

NOVEMBER 02, 2006 TRUSS DESIGN ENGINEER:
THOMAS E. MILLER PE 56877, BYRON K. ANDERSON PE 60987
STRUCTURAL ENGINEERING AND INSPECTIONS, INC. EB 9196
16105 N. FLORIDA AVE. STE B, LUTZ, FL 33549

Dwg.#1102061044

Job	Truss	Truss Type	Qty	Ply	LINTON RESIDENCE
L216061	CJ11A	JACK	4	1	Job Reference (optional)

Builders FirstSource, Lake City, Fl 32055 — 6.300 s Apr 19 2006 MiTek Industries, Inc. Wed Nov 01 14:05:01 2006 Page 1

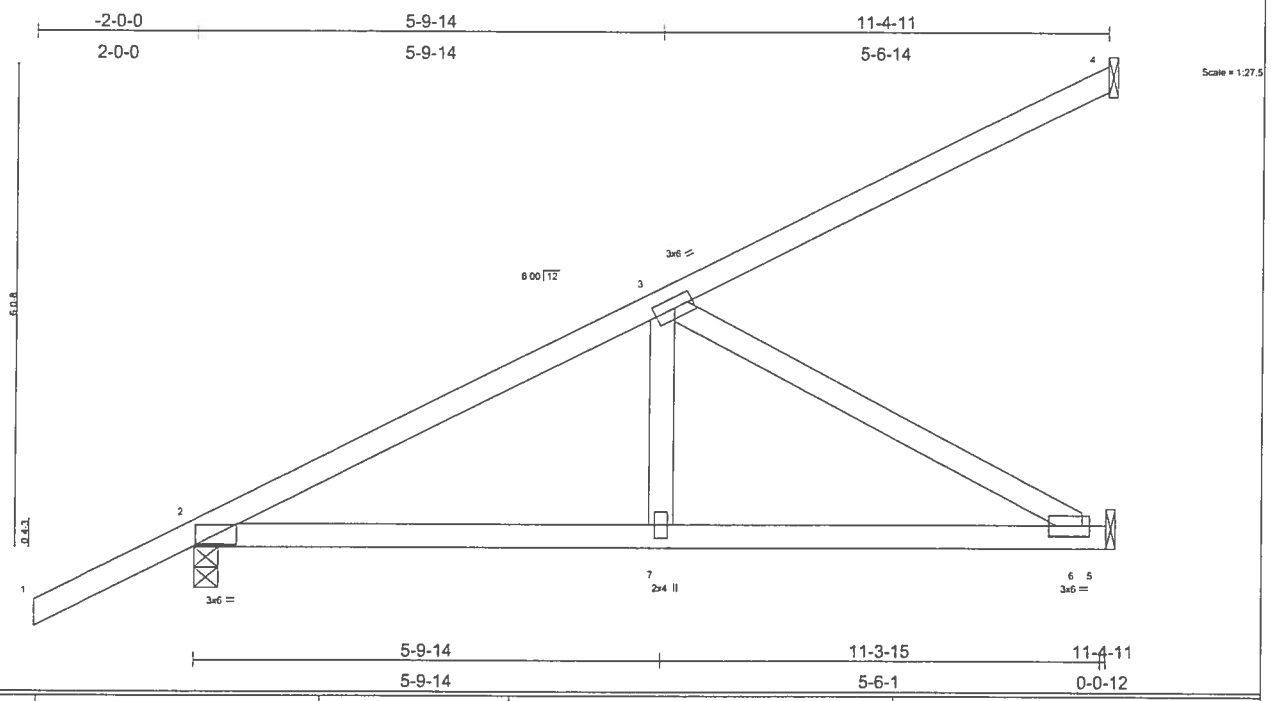

LOADING (psf)		SPACING	2-0-0	CSI		DEFL	in	(loc)	l/defl	L/d	PLATES	GRIP
TCLL	20.0	Plates Increase	1.25	TC	0.32	Vert(LL)	-0.05	6-7	>999	240	MT20	244/190
TCDL	7.0	Lumber Increase	1.25	BC	0.30	Vert(TL)	-0.08	6-7	>999	180		
BCLL	10.0	Rep Stress Incr	YES	WB	0.40	Horz(TL)	0.01	5	n/a	n/a		
BCDL	5.0	Code FBC2004/TPI2002		(Matrix)							Weight: 52 lb	

LUMBER
TOP CHORD 2 X 4 SYP No.2
BOT CHORD 2 X 4 SYP No.2
WEBS 2 X 4 SYP No.3

BRACING
TOP CHORD Structural wood sheathing directly applied or 6-0-0 oc purlins.
BOT CHORD Rigid ceiling directly applied or 10-0-0 oc bracing.

REACTIONS (lb/size) 4=117/Mechanical, 2=597/0-3-8, 5=342/Mechanical
Max Horz 2=325(load case 5)
Max Uplift4=-108(load case 5), 2=-245(load case 5), 5=-122(load case 5)

FORCES (lb) - Maximum Compression/Maximum Tension
TOP CHORD 1-2=0/47, 2-3=-654/115, 3-4=-83/39
BOT CHORD 2-7=-337/523, 6-7=-337/523, 5-6=0/0
WEBS 3-7=0/216, 3-6=-599/386

NOTES
1) Wind: ASCE 7-02; 110mph (3-second gust); h=24ft; TCDL=4.2psf; BCDL=3.0psf; Category II; Exp B; enclosed; MWFRS gable end zone and C-C Exterior(2) zone; end vertical left exposed; Lumber DOL=1.60 plate grip DOL=1.60. This truss is designed for C-C for members and forces, and for MWFRS for reactions specified.
2) Refer to girder(s) for truss to truss connections.
3) Provide mechanical connection (by others) of truss to bearing plate capable of withstanding 108 lb uplift at joint 4, 245 lb uplift at joint 2 and 122 lb uplift at joint 5.

LOAD CASE(S) Standard

NOVEMBER 02, 2006 TRUSS DESIGN ENGINEER:
THOMAS E. MILLER PE 56877, BYRON K. ANDERSON PE 60987
STRUCTURAL ENGINEERING AND INSPECTIONS, INC. EB 9196
16105 N. FLORIDA AVE. STE B, LUTZ, FL 33549

Dwg.#1102061045

Job	Truss	Truss Type	Qty	Ply	LINTON RESIDENCE
L216061	CJ1A	JACK	4	1	Job Reference (optional)

Builders FirstSource, Lake City, Fl 32055 — 6.300 s Apr 19 2006 MiTek Industries, Inc. Wed Nov 01 14:04:52 2006 Page 1

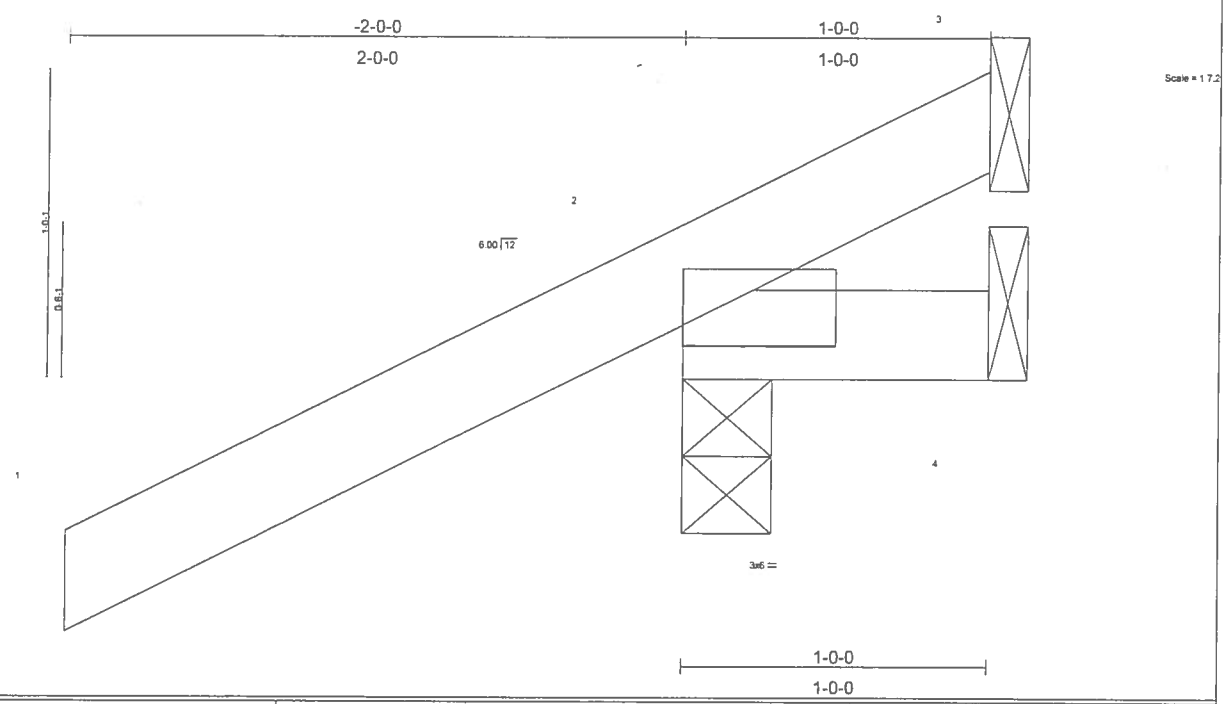

LOADING (psf)		SPACING 2-0-0		CSI		DEFL	in	(loc)	l/defl	L/d	PLATES	GRIP
TCLL	20.0	Plates Increase	1.25	TC	0.26	Vert(LL)	-0.00	2	>999	240	MT20	244/190
TCDL	7.0	Lumber Increase	1.25	BC	0.01	Vert(TL)	-0.00	2	>999	180		
BCLL	10.0	Rep Stress Incr	YES	WB	0.00	Horz(TL)	0.00	3	n/a	n/a		
BCDL	5.0	Code FBC2004/TPI2002		(Matrix)							Weight: 7 lb	

LUMBER
TOP CHORD 2 X 4 SYP No.2
BOT CHORD 2 X 4 SYP No.2

BRACING
TOP CHORD Structural wood sheathing directly applied or 1-0-0 oc purlins.
BOT CHORD Rigid ceiling directly applied or 10-0-0 oc bracing.

REACTIONS (lb/size) 2=266/0-3-8, 4=14/Mechanical, 3=-90/Mechanical
Max Horz 2=84(load case 5)
Max Uplift2=-260(load case 5), 3=-90(load case 1)
Max Grav 2=266(load case 1), 4=14(load case 1), 3=113(load case 5)

FORCES (lb) - Maximum Compression/Maximum Tension
TOP CHORD 1-2=0/40, 2-3=-83/80
BOT CHORD 2-4=0/0

NOTES
1) Wind: ASCE 7-02; 110mph (3-second gust); h=24ft; TCDL=4.2psf; BCDL=3.0psf; Category II; Exp B; enclosed; MWFRS gable end zone and C-C Exterior(2) zone; end vertical left exposed; Lumber DOL=1.60 plate grip DOL=1.60. This truss is designed for C-C for members and forces, and for MWFRS for reactions specified.
2) Refer to girder(s) for truss to truss connections.
3) Provide mechanical connection (by others) of truss to bearing plate capable of withstanding 260 lb uplift at joint 2 and 90 lb uplift at joint 3.

LOAD CASE(S) Standard

NOVEMBER 02, 2006 TRUSS DESIGN ENGINEER:
THOMAS E. MILLER PE 56877, BYRON K. ANDERSON PE 60987
STRUCTURAL ENGINEERING AND INSPECTIONS, INC. EB 9196
16105 N. FLORIDA AVE. STE B, LUTZ, FL 33549

Dwg.#1102061046

Job	Truss	Truss Type	Qty	Ply	LINTON RESIDENCE
L216061	CJ1B	JACK	2	1	Job Reference (optional)

Builders FirstSource, Lake City, Fl 32055

6.300 s Apr 19 2006 MiTek Industries, Inc. Wed Nov 01 14:05:30 2006 Page 1

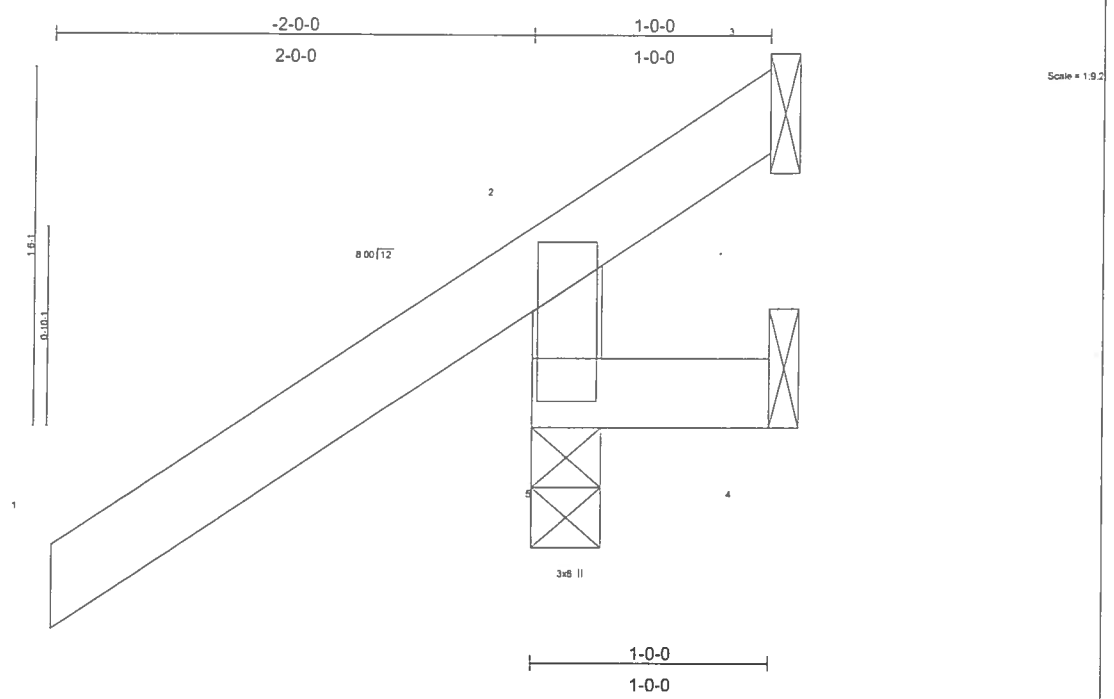

Plate Offsets (X,Y): [5:0-4-8,0-1-8]

LOADING (psf)		SPACING	2-0-0	CSI		DEFL	in	(loc)	l/defl	L/d	PLATES	GRIP
TCLL	20.0	Plates Increase	1.25	TC	0.32	Vert(LL)	0.00	5	>999	240	MT20	244/190
TCDL	7.0	Lumber Increase	1.25	BC	0.06	Vert(TL)	0.00	5	>999	180		
BCLL	10.0	Rep Stress Incr	YES	WB	0.00	Horz(TL)	0.00	3	n/a	n/a		
BCDL	5.0	Code FBC2004/TPI2002		(Matrix)							Weight: 8 lb	

LUMBER
TOP CHORD 2 X 4 SYP No.2
BOT CHORD 2 X 4 SYP No.2
WEBS 2 X 4 SYP No.3

BRACING
TOP CHORD Structural wood sheathing directly applied or 1-0-0 oc purlins, except end verticals.
BOT CHORD Rigid ceiling directly applied or 10-0-0 oc bracing.

REACTIONS (lb/size) 5=299/0-3-8, 4=-26/Mechanical, 3=-86/Mechanical
Max Horz 5=118(load case 5)
Max Uplift5=-271(load case 5), 4=-26(load case 1), 3=-86(load case 1)
Max Grav 5=299(load case 1), 4=17(load case 5), 3=107(load case 5)

FORCES (lb) - Maximum Compression/Maximum Tension
TOP CHORD 2-5=-248/302, 1-2=0/64, 2-3=-73/69
BOT CHORD 4-5=0/0

NOTES
1) Wind: ASCE 7-02; 110mph (3-second gust); h=24ft; TCDL=4.2psf; BCDL=3.0psf; Category II; Exp B; enclosed; MWFRS gable end zone and C-C Exterior(2) zone; end vertical left exposed; Lumber DOL=1.60 plate grip DOL=1.60. This truss is designed for C-C for members and forces, and for MWFRS for reactions specified.
2) Refer to girder(s) for truss to truss connections.
3) Provide mechanical connection (by others) of truss to bearing plate capable of withstanding 271 lb uplift at joint 5, 26 lb uplift at joint 4 and 86 lb uplift at joint 3.

LOAD CASE(S) Standard

NOVEMBER 02, 2006 TRUSS DESIGN ENGINEER:
THOMAS E. MILLER PE 56877, BYRON K. ANDERSON PE 60987
STRUCTURAL ENGINEERING AND INSPECTIONS, INC. EB 9196
16105 N. FLORIDA AVE. STE B, LUTZ, FL 33549

Dwg.#1102061047

Job	Truss	Truss Type	Qty	Ply	LINTON RESIDENCE
L216061	CJ1C	JACK	1	1	Job Reference (optional)

Builders FirstSource, Lake City, Fl 32055

6.300 s Apr 19 2006 MiTek Industries, Inc. Wed Nov 01 14:05:54 2006 Page 1

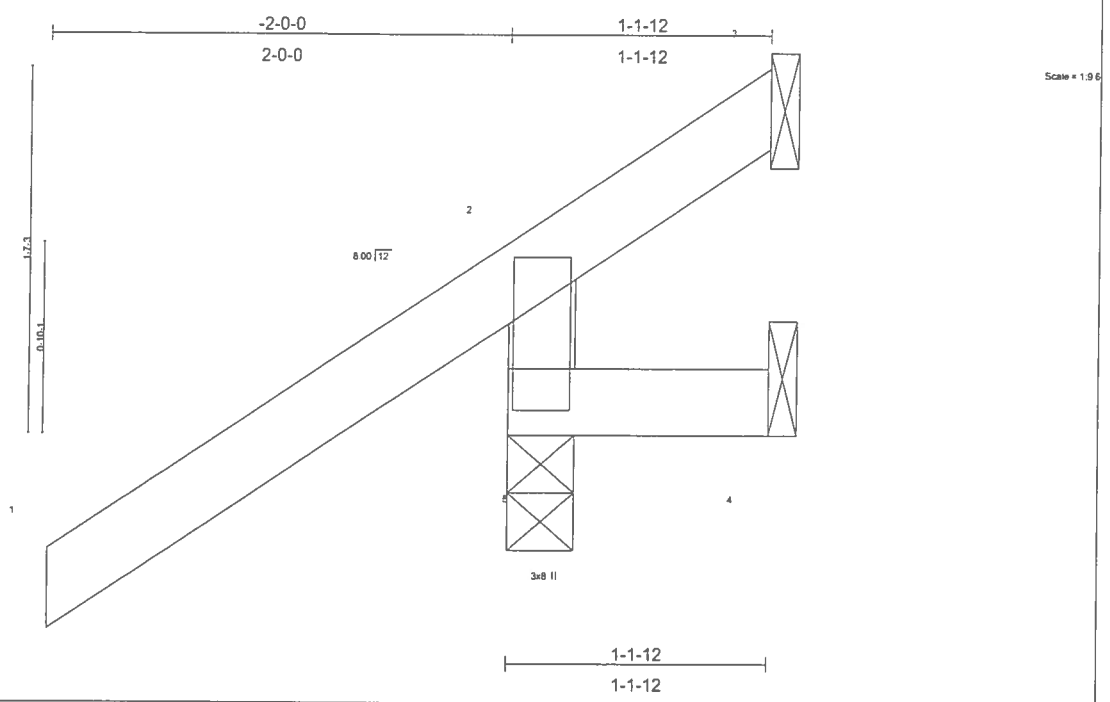

Plate Offsets (X,Y): [5:0-4-8,0-1-8]

LOADING (psf)		SPACING	2-0-0	CSI		DEFL	in	(loc)	l/defl	L/d	PLATES	GRIP
TCLL	20.0	Plates Increase	1.25	TC	0.33	Vert(LL)	0.00	5	>999	240	MT20	244/190
TCDL	7.0	Lumber Increase	1.25	BC	0.07	Vert(TL)	0.00	5	>999	180		
BCLL	10.0	Rep Stress Incr	YES	WB	0.00	Horz(TL)	0.00	3	n/a	n/a		
BCDL	5.0	Code FBC2004/TPI2002		(Matrix)							Weight: 8 lb	

LUMBER
TOP CHORD 2 X 4 SYP No.2
BOT CHORD 2 X 4 SYP No.2
WEBS 2 X 4 SYP No.3

BRACING
TOP CHORD Structural wood sheathing directly applied or 1-1-12 oc purlins, except end verticals.
BOT CHORD Rigid ceiling directly applied or 10-0-0 oc bracing.

REACTIONS (lb/size) 5=283/0-3-8, 4=-20/Mechanical, 3=-64/Mechanical
Max Horz 5=123(load case 5)
Max Uplift5=-248(load case 5), 4=-20(load case 1), 3=-64(load case 1)
Max Grav 5=283(load case 1), 4=17(load case 5), 3=79(load case 5)

FORCES (lb) - Maximum Compression/Maximum Tension
TOP CHORD 2-5=-234/276, 1-2=0/64, 2-3=-65/51
BOT CHORD 4-5=0/0

NOTES
1) Wind: ASCE 7-02; 110mph (3-second gust); h=24ft; TCDL=4.2psf; BCDL=3.0psf; Category II; Exp B; enclosed; MWFRS gable end zone and C-C Exterior(2) zone; end vertical left exposed; Lumber DOL=1.60 plate grip DOL=1.60. This truss is designed for C-C for members and forces, and for MWFRS for reactions specified.
2) Refer to girder(s) for truss to truss connections.
3) Provide mechanical connection (by others) of truss to bearing plate capable of withstanding 248 lb uplift at joint 5, 20 lb uplift at joint 4 and 64 lb uplift at joint 3.

LOAD CASE(S) Standard

NOVEMBER 02, 2006 TRUSS DESIGN ENGINEER:
THOMAS E. MILLER PE 56877, BYRON K. ANDERSON PE 60987
STRUCTURAL ENGINEERING AND INSPECTIONS, INC. EB 9196
16105 N. FLORIDA AVE. STE B, LUTZ, FL 33549

Dwg.#1102061048

Job	Truss	Truss Type	Qty	Ply	LINTON RESIDENCE
L216061	CJ1D	JACK	4	1	Job Reference (optional)

Builders FirstSource, Lake City, Fl 32055

6.300 s Apr 19 2006 MiTek Industries, Inc. Wed Nov 01 14:06:24 2006 Page 1

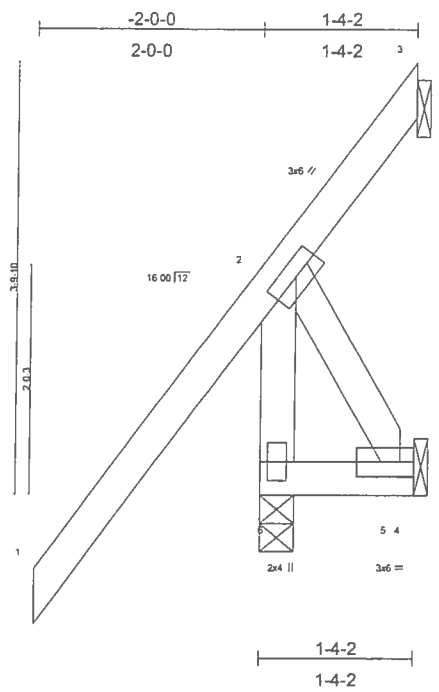

Plate Offsets (X,Y): [5:Edge,0-1-8]

LOADING (psf)		SPACING	2-0-0	CSI		DEFL	in	(loc)	l/defl	L/d	PLATES	GRIP
TCLL	20.0	Plates Increase	1.25	TC	0.67	Vert(LL)	-0.00	6	>999	240	MT20	244/190
TCDL	7.0	Lumber Increase	1.25	BC	0.01	Vert(TL)	-0.00	6	>999	180		
BCLL	10.0	Rep Stress Incr	YES	WB	0.15	Horz(TL)	-0.00	3	n/a	n/a		
BCDL	5.0	Code FBC2004/TPI2002		(Matrix)							Weight: 16 lb	

LUMBER
TOP CHORD 2 X 4 SYP No.2
BOT CHORD 2 X 4 SYP No.2
WEBS 2 X 4 SYP No.3

BRACING
TOP CHORD Structural wood sheathing directly applied or 1-4-2 oc purlins, except end verticals.
BOT CHORD Rigid ceiling directly applied or 10-0-0 oc bracing.

REACTIONS (lb/size) 6=269/0-3-8, 5=21/Mechanical, 3=-73/Mechanical
Max Horz 6=257(load case 5)
Max Uplift6=-19(load case 3), 5=-432(load case 5), 3=-73(load case 1)
Max Grav 6=269(load case 1), 5=21(load case 1), 3=262(load case 5)

FORCES (lb) - Maximum Compression/Maximum Tension
TOP CHORD 2-6=-253/22, 1-2=0/93, 2-3=-110/233
BOT CHORD 5-6=-303/0, 4-5=0/0
WEBS 2-5=-0/597

NOTES
1) Wind: ASCE 7-02; 110mph (3-second gust); h=24ft; TCDL=4.2psf; BCDL=3.0psf; Category II; Exp B; enclosed; MWFRS gable end zone and C-C Exterior(2) zone; end vertical left exposed; Lumber DOL=1.60 plate grip DOL=1.60. This truss is designed for C-C for members and forces, and for MWFRS for reactions specified.
2) Refer to girder(s) for truss to truss connections.
3) Provide mechanical connection (by others) of truss to bearing plate capable of withstanding 19 lb uplift at joint 6, 432 lb uplift at joint 5 and 73 lb uplift at joint 3.

LOAD CASE(S) Standard

NOVEMBER 02, 2006 TRUSS DESIGN ENGINEER:
THOMAS E. MILLER PE 56877, BYRON K. ANDERSON PE 60987
STRUCTURAL ENGINEERING AND INSPECTIONS, INC. EB 9196
16105 N. FLORIDA AVE. STE B, LUTZ, FL 33549

Dwg.#1102061049

Job	Truss	Truss Type	Qty	Ply	LINTON RESIDENCE
L216061	CJ1E	JACK	4	1	Job Reference (optional)

Builders FirstSource, Lake City, Fl 32055

6.300 s Apr 19 2006 MiTek Industries, Inc. Wed Nov 01 14:06:45 2006 Page 1

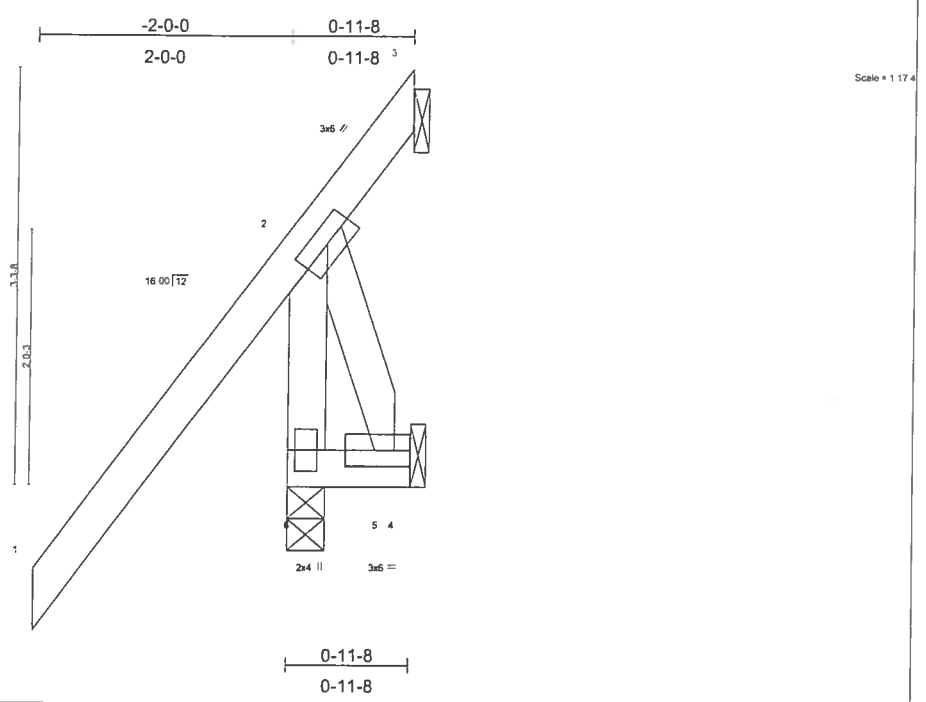

Plate Offsets (X,Y): [5:Edge,0-1-8]

LOADING (psf)		SPACING 2-0-0		CSI		DEFL	in	(loc)	l/defl	L/d	PLATES	GRIP
TCLL	20.0	Plates Increase	1.25	TC	0.69	Vert(LL)	-0.00	6	>999	240	MT20	244/190
TCDL	7.0	Lumber Increase	1.25	BC	0.00	Vert(TL)	-0.00	6	>999	180		
BCLL	10.0	Rep Stress Incr	YES	WB	0.19	Horz(TL)	-0.01	3	n/a	n/a		
BCDL	5.0	Code FBC2004/TPI2002		(Matrix)							Weight: 14 lb	

LUMBER
TOP CHORD 2 X 4 SYP No.2
BOT CHORD 2 X 4 SYP No.2
WEBS 2 X 4 SYP No.3

BRACING
TOP CHORD Structural wood sheathing directly applied or 0-11-8 oc purlins, except end verticals.
BOT CHORD Rigid ceiling directly applied or 10-0-0 oc bracing.

REACTIONS (lb/size) 6=303/0-3-8, 5=16/Mechanical, 3=-134/Mechanical
Max Horz 6=234(load case 5)
Max Uplift6=-13(load case 3), 5=-614(load case 5), 3=-134(load case 1)
Max Grav 6=303(load case 1), 5=16(load case 1), 3=444(load case 5)

FORCES (lb) - Maximum Compression/Maximum Tension
TOP CHORD 2-6=-293/14, 1-2=0/93, 2-3=-142/403
BOT CHORD 5-6=-273/0, 4-5=0/0
WEBS 2-5=0/771

NOTES
1) Wind: ASCE 7-02; 110mph (3-second gust); h=24ft; TCDL=4.2psf; BCDL=3.0psf; Category II; Exp B; enclosed; MWFRS gable end zone and C-C Exterior(2) zone; end vertical left exposed; Lumber DOL=1.60 plate grip DOL=1.60. This truss is designed for C-C for members and forces, and for MWFRS for reactions specified.
2) Refer to girder(s) for truss to truss connections.
3) Provide mechanical connection (by others) of truss to bearing plate capable of withstanding 13 lb uplift at joint 6, 614 lb uplift at joint 5 and 134 lb uplift at joint 3.

LOAD CASE(S) Standard

NOVEMBER 02, 2006 TRUSS DESIGN ENGINEER:
THOMAS E. MILLER PE 56877, BYRON K. ANDERSON PE 60987
STRUCTURAL ENGINEERING AND INSPECTIONS, INC. EB 9196
16105 N. FLORIDA AVE. STE B, LUTZ, FL 33549

Dwg.#1102061050

Job	Truss	Truss Type	Qty	Ply	LINTON RESIDENCE
L216061	CJ2	JACK	1	1	Job Reference (optional)

Builders FirstSource, Lake City, Fl 32055 — 6.300 s Apr 19 2006 MiTek Industries, Inc. Wed Nov 01 14:07:27 2006 Page 1

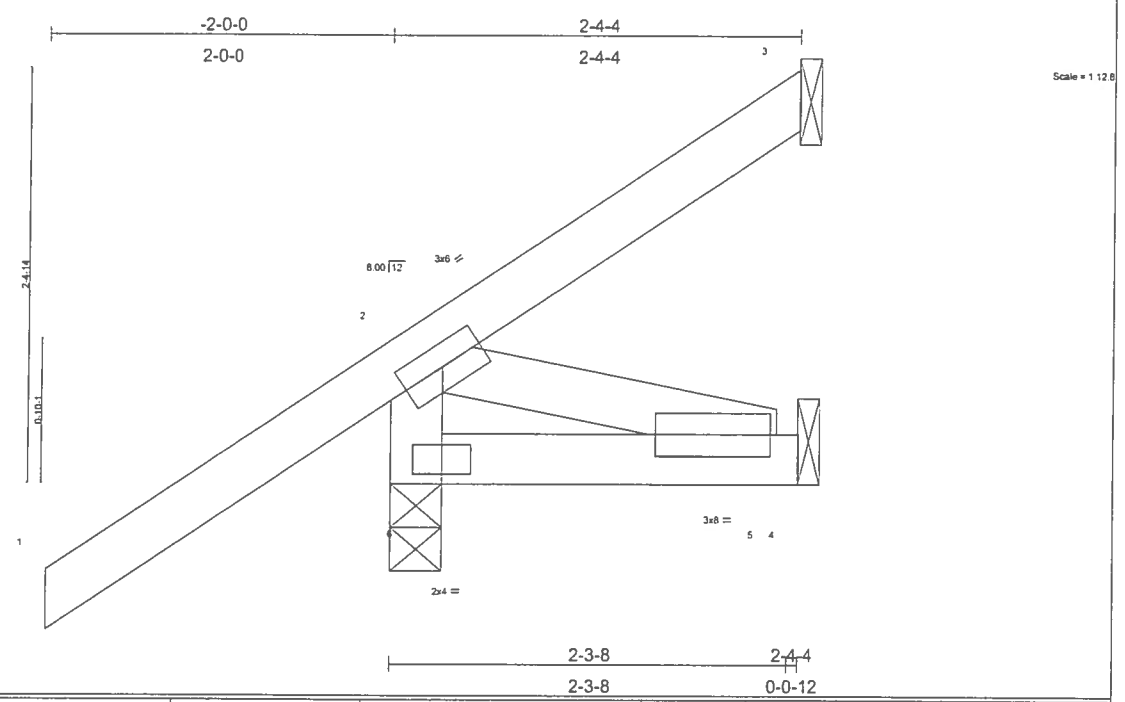

LOADING (psf)		SPACING 2-0-0		CSI		DEFL	in	(loc)	l/defl	L/d	PLATES	GRIP
TCLL	20.0	Plates Increase	1.25	TC	0.32	Vert(LL)	-0.00	6	>999	240	MT20	244/190
TCDL	7.0	Lumber Increase	1.25	BC	0.03	Vert(TL)	-0.00	5-6	>999	180		
BCLL	10.0	Rep Stress Incr	YES	WB	0.05	Horz(TL)	-0.00	3	n/a	n/a		
BCDL	5.0	Code FBC2004/TPI2002		(Matrix)							Weight: 15 lb	

LUMBER
TOP CHORD 2 X 4 SYP No.2
BOT CHORD 2 X 4 SYP No.2
WEBS 2 X 4 SYP No.3

BRACING
TOP CHORD Structural wood sheathing directly applied or 2-4-4 oc purlins, except end verticals.
BOT CHORD Rigid ceiling directly applied or 10-0-0 oc bracing.

REACTIONS (lb/size) 3=0/Mechanical, 5=36/Mechanical, 6=263/0-3-8
Max Horz 6=173(load case 5)
Max Uplift3=-10(load case 6), 5=-41(load case 5), 6=-175(load case 5)
Max Grav 3=34(load case 3), 5=36(load case 1), 6=263(load case 1)

FORCES (lb) - Maximum Compression/Maximum Tension
TOP CHORD 2-6=-232/210, 1-2=0/64, 2-3=-64/19
BOT CHORD 5-6=-193/0, 4-5=0/0
WEBS 2-5=-0/201

NOTES
1) Wind: ASCE 7-02; 110mph (3-second gust); h=24ft; TCDL=4.2psf; BCDL=3.0psf; Category II; Exp B; enclosed; MWFRS gable end zone and C-C Exterior(2) zone; end vertical left exposed; Lumber DOL=1.60 plate grip DOL=1.60. This truss is designed for C-C for members and forces, and for MWFRS for reactions specified.
2) Refer to girder(s) for truss to truss connections.
3) Bearing at joint(s) 6 considers parallel to grain value using ANSI/TPI 1 angle to grain formula. Building designer should verify capacity of bearing surface
4) Provide mechanical connection (by others) of truss to bearing plate capable of withstanding 10 lb uplift at joint 3, 41 lb uplift at joint 5 and 175 lb uplift at joint 6.

LOAD CASE(S) Standard

NOVEMBER 02, 2006 TRUSS DESIGN ENGINEER:
THOMAS E. MILLER PE 56877, BYRON K. ANDERSON PE 60987
STRUCTURAL ENGINEERING AND INSPECTIONS, INC. EB 9196
16105 N. FLORIDA AVE. STE B, LUTZ, FL 33549

Dwg.#1102061051

Job	Truss	Truss Type	Qty	Ply	LINTON RESIDENCE
L216061	CJ2A	JACK	1	1	Job Reference (optional)

Builders FirstSource, Lake City, Fl 32055 — 6.300 s Apr 19 2006 MiTek Industries, Inc. Wed Nov 01 14:07:59 2006 Page 1

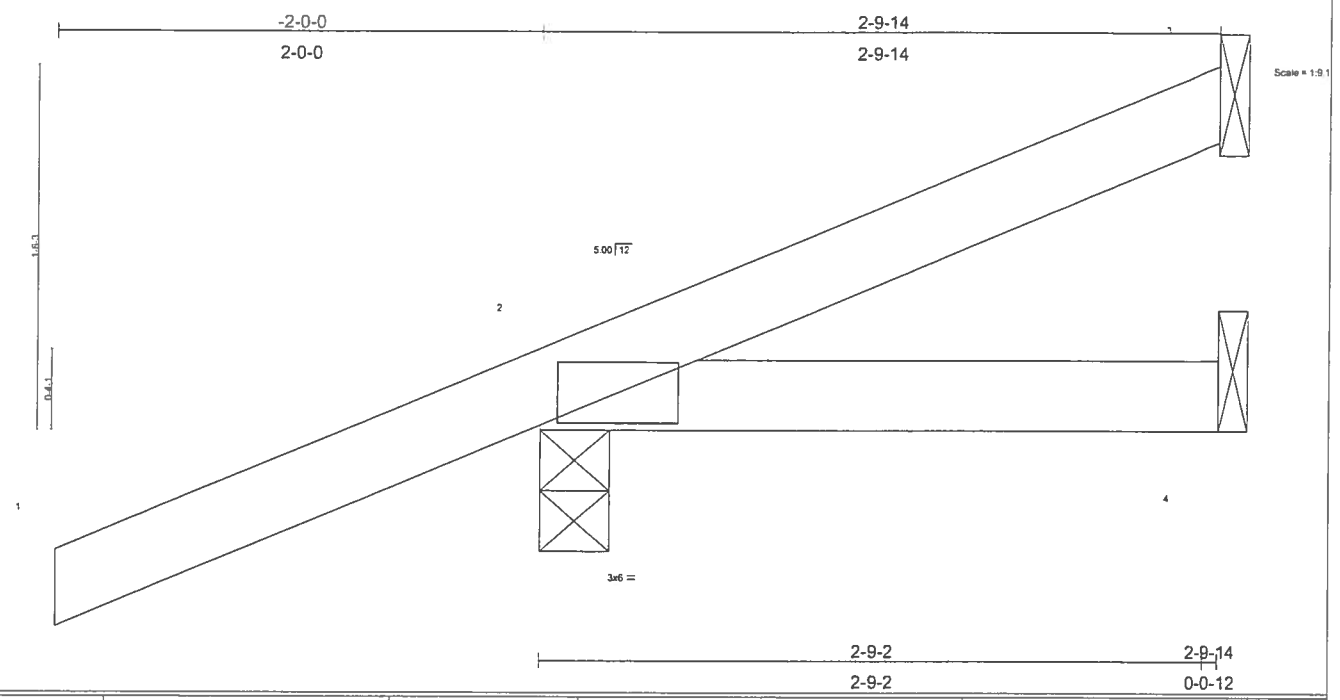

LOADING (psf)		SPACING	2-0-0	CSI		DEFL	in	(loc)	l/defl	L/d	PLATES	GRIP
TCLL	20.0	Plates Increase	1.25	TC	0.28	Vert(LL)	-0.00	2-4	>999	240	MT20	244/190
TCDL	7.0	Lumber Increase	1.25	BC	0.05	Vert(TL)	-0.00	2-4	>999	180		
BCLL	10.0	Rep Stress Incr	YES	WB	0.00	Horz(TL)	-0.00	3	n/a	n/a		
BCDL	5.0	Code FBC2004/TPI2002		(Matrix)							Weight: 12 lb	

LUMBER
TOP CHORD 2 X 4 SYP No.2
BOT CHORD 2 X 4 SYP No.2

BRACING
TOP CHORD Structural wood sheathing directly applied or 2-9-14 oc purlins.
BOT CHORD Rigid ceiling directly applied or 10-0-0 oc bracing.

REACTIONS (lb/size) 3=23/Mechanical, 2=273/0-3-8, 4=39/Mechanical
Max Horz 2=106(load case 5)
Max Uplift3=-21(load case 6), 2=-207(load case 5)

FORCES (lb) - Maximum Compression/Maximum Tension
TOP CHORD 1-2=0/40, 2-3=-49/4
BOT CHORD 2-4=0/0

NOTES
1) Wind: ASCE 7-02; 110mph (3-second gust); h=24ft; TCDL=4.2psf; BCDL=3.0psf; Category II; Exp B; enclosed; MWFRS gable end zone and C-C Exterior(2) zone; end vertical left exposed; Lumber DOL=1.60 plate grip DOL=1.60. This truss is designed for C-C for members and forces, and for MWFRS for reactions specified.
2) Refer to girder(s) for truss to truss connections.
3) Provide mechanical connection (by others) of truss to bearing plate capable of withstanding 21 lb uplift at joint 3 and 207 lb uplift at joint 2.

LOAD CASE(S) Standard

NOVEMBER 02, 2006 TRUSS DESIGN ENGINEER:
THOMAS E. MILLER PE 56877, BYRON K. ANDERSON PE 60987
STRUCTURAL ENGINEERING AND INSPECTIONS, INC. EB 9196
16105 N. FLORIDA AVE. STE B, LUTZ, FL 33549

Dwg.#1102061052

Job	Truss	Truss Type	Qty	Ply	LINTON RESIDENCE
L216061	CJ2B	JACK	1	1	Job Reference (optional)

Builders FirstSource, Lake City, Fl 32055 — 6.300 s Apr 19 2006 MiTek Industries, Inc. Wed Nov 01 14:12:04 2006 Page 1

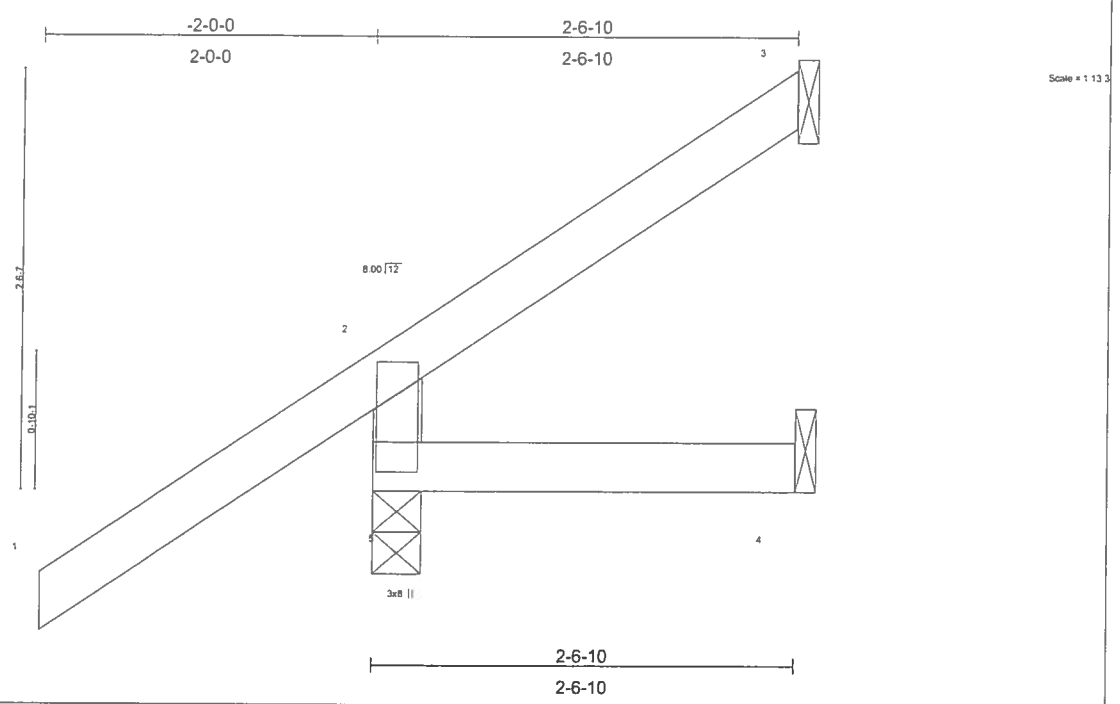

Plate Offsets (X,Y): [5:0-4-8,0-1-8]

LOADING (psf)		SPACING	2-0-0	CSI		DEFL	in	(loc)	l/defl	L/d	PLATES	GRIP
TCLL	20.0	Plates Increase	1.25	TC	0.38	Vert(LL)	0.00	5	>999	240	MT20	244/190
TCDL	7.0	Lumber Increase	1.25	BC	0.08	Vert(TL)	0.00	5	>999	180		
BCLL	10.0	Rep Stress Incr	YES	WB	0.00	Horz(TL)	-0.00	3	n/a	n/a		
BCDL	5.0	Code FBC2004/TPI2002		(Matrix)							Weight: 13 lb	

LUMBER
TOP CHORD 2 X 4 SYP No.2
BOT CHORD 2 X 4 SYP No.2
WEBS 2 X 4 SYP No.3

BRACING
TOP CHORD Structural wood sheathing directly applied or 2-6-10 oc purlins, except end verticals.
BOT CHORD Rigid ceiling directly applied or 10-0-0 oc bracing.

REACTIONS (lb/size) 5=267/0-3-8, 3=28/Mechanical, 4=18/Mechanical
Max Horz 5=179(load case 5)
Max Uplift5=-172(load case 5), 3=-34(load case 6)

FORCES (lb) - Maximum Compression/Maximum Tension
TOP CHORD 2-5=-215/206, 1-2=0/64, 2-3=-55/12
BOT CHORD 4-5=0/0

NOTES
1) Wind: ASCE 7-02; 110mph (3-second gust); h=24ft; TCDL=4.2psf; BCDL=3.0psf; Category II; Exp B; enclosed; MWFRS gable end zone and C-C Exterior(2) zone; end vertical left exposed; Lumber DOL=1.60 plate grip DOL=1.60. This truss is designed for C-C for members and forces, and for MWFRS for reactions specified.
2) Refer to girder(s) for truss to truss connections.
3) Provide mechanical connection (by others) of truss to bearing plate capable of withstanding 172 lb uplift at joint 5 and 34 lb uplift at joint 3.

LOAD CASE(S) Standard

NOVEMBER 02, 2006 TRUSS DESIGN ENGINEER:
THOMAS E. MILLER PE 56877, BYRON K. ANDERSON PE 60987
STRUCTURAL ENGINEERING AND INSPECTIONS, INC. EB 9196
16105 N. FLORIDA AVE. STE B, LUTZ, FL 33549

Dwg.#1102061053

Job	Truss	Truss Type	Qty	Ply	LINTON RESIDENCE
L216061	CJ2C	JACK	1	1	Job Reference (optional)

Builders FirstSource, Lake City, Fl 32055

6.300 s Apr 19 2006 MiTek Industnes, Inc. Wed Nov 01 14:12:26 2006 Page 1

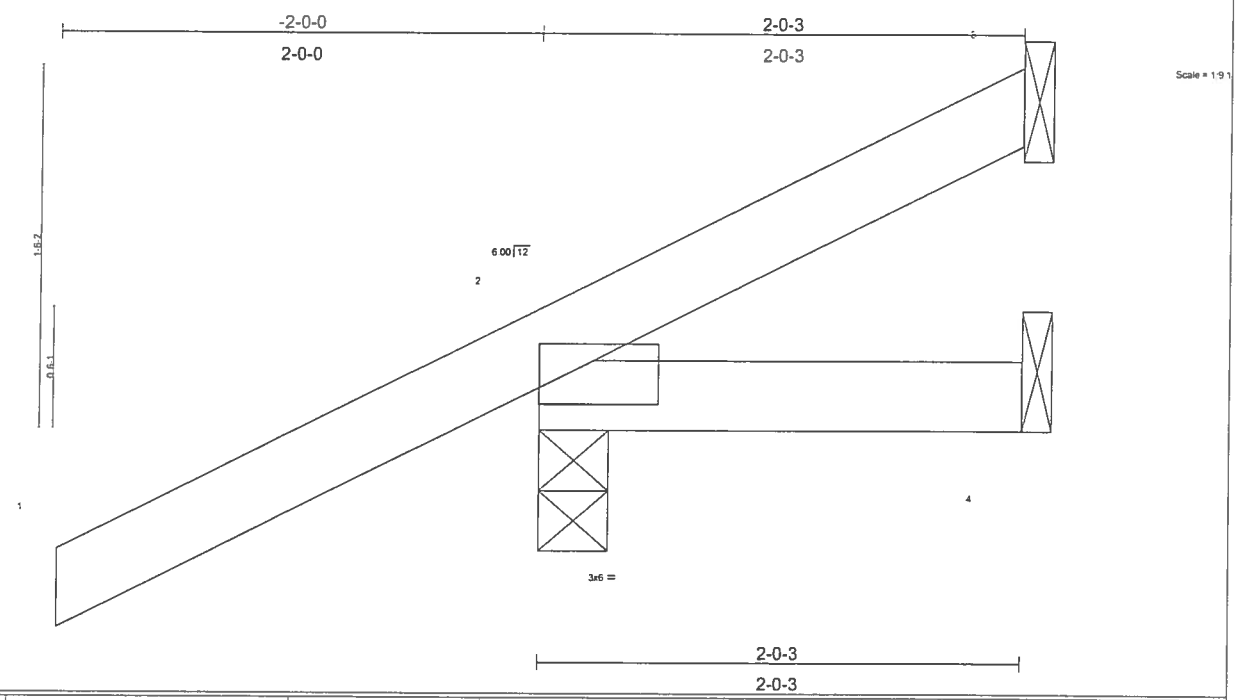

LOADING (psf)		SPACING 2-0-0		CSI		DEFL in (loc) l/defl L/d		PLATES GRIP
TCLL	20.0	Plates Increase	1.25	TC	0.28	Vert(LL) -0.00 2 >999 240		MT20 244/190
TCDL	7.0	Lumber Increase	1.25	BC	0.02	Vert(TL) -0.00 2 >999 180		
BCLL	10.0	Rep Stress Incr	YES	WB	0.00	Horz(TL) -0.00 3 n/a n/a		
BCDL	5.0	Code FBC2004/TPI2002		(Matrix)				Weight: 10 lb

LUMBER
TOP CHORD 2 X 4 SYP No.2
BOT CHORD 2 X 4 SYP No.2

BRACING
TOP CHORD Structural wood sheathing directly applied or 2-0-3 oc purlins.
BOT CHORD Rigid ceiling directly applied or 10-0-0 oc bracing.

REACTIONS (lb/size) 3=-20/Mechanical, 2=261/0-3-8, 4=27/Mechanical
Max Horz 2=106(load case 5)
Max Uplift3=-20(load case 1), 2=-215(load case 5)
Max Grav 3=32(load case 5), 2=261(load case 1), 4=27(load case 1)

FORCES (lb) - Maximum Compression/Maximum Tension
TOP CHORD 1-2=0/41, 2-3=-64/16
BOT CHORD 2-4=0/0

NOTES
1) Wind: ASCE 7-02; 110mph (3-second gust); h=24ft; TCDL=4.2psf; BCDL=3.0psf; Category II; Exp B; enclosed: MWFRS gable end zone and C-C Exterior(2) zone; end vertical left exposed; Lumber DOL=1.60 plate grip DOL=1.60. This truss is designed for C-C for members and forces, and for MWFRS for reactions specified.
2) Refer to girder(s) for truss to truss connections.
3) Provide mechanical connection (by others) of truss to bearing plate capable of withstanding 20 lb uplift at joint 3 and 215 lb uplift at joint 2.

LOAD CASE(S) Standard

NOVEMBER 02, 2006 TRUSS DESIGN ENGINEER:
THOMAS E. MILLER PE 56877, BYRON K. ANDERSON PE 60987
STRUCTURAL ENGINEERING AND INSPECTIONS, INC. EB 9196
16105 N. FLORIDA AVE. STE B, LUTZ, FL 33549

Dwg.#1102061054

Job	Truss	Truss Type	Qty	Ply	LINTON RESIDENCE
L216061	CJ2D	JACK	4	1	Job Reference (optional)

Builders FirstSource, Lake City, Fl 32055

6.300 s Apr 19 2006 MiTek Industries, Inc. Wed Nov 01 14:14:01 2006 Page 1

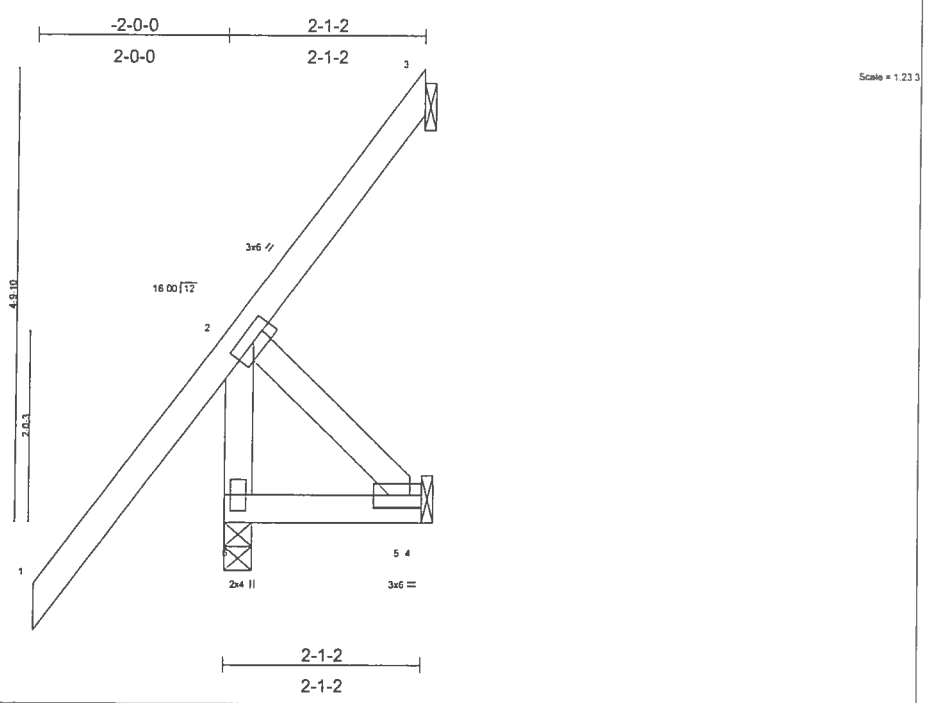

Plate Offsets (X,Y): [5:Edge,0-1-8]

LOADING (psf)		SPACING 2-0-0		CSI		DEFL	in	(loc)	l/defl	L/d	PLATES	GRIP
TCLL	20.0	Plates Increase	1.25	TC	0.65	Vert(LL)	-0.00	6	>999	240	MT20	244/190
TCDL	7.0	Lumber Increase	1.25	BC	0.02	Vert(TL)	-0.00	6	>999	180		
BCLL	10.0	Rep Stress Incr	YES	WB	0.13	Horz(TL)	-0.00	3	n/a	n/a		
BCDL	5.0	Code FBC2004/TPI2002		(Matrix)							Weight: 20 lb	

LUMBER
TOP CHORD 2 X 4 SYP No.2
BOT CHORD 2 X 4 SYP No.2
WEBS 2 X 4 SYP No.3

BRACING
TOP CHORD Structural wood sheathing directly applied or 2-1-2 oc purlins, except end verticals.
BOT CHORD Rigid ceiling directly applied or 10-0-0 oc bracing.

REACTIONS (lb/size) 6=260/0-3-8, 3=-15/Mechanical, 5=33/Mechanical
Max Horz 6=301(load case 5)
Max Uplift6=-21(load case 3), 3=-15(load case 1), 5=-293(load case 5)
Max Grav 6=260(load case 1), 3=96(load case 5), 5=33(load case 1)

FORCES (lb) - Maximum Compression/Maximum Tension
TOP CHORD 2-6=-233/26, 1-2=0/93, 2-3=-93/76
BOT CHORD 5-6=-357/0, 4-5=0/0
WEBS 2-5=-0/505

NOTES
1) Wind: ASCE 7-02; 110mph (3-second gust); h=24ft; TCDL=4.2psf; BCDL=3.0psf; Category II; Exp B; enclosed; MWFRS gable end zone and C-C Exterior(2) zone; end vertical left exposed; Lumber DOL=1.60 plate grip DOL=1.60. This truss is designed for C-C for members and forces, and for MWFRS for reactions specified.
2) Refer to girder(s) for truss to truss connections.
3) Provide mechanical connection (by others) of truss to bearing plate capable of withstanding 21 lb uplift at joint 6, 15 lb uplift at joint 3 and 293 lb uplift at joint 5.

LOAD CASE(S) Standard

NOVEMBER 02, 2006 TRUSS DESIGN ENGINEER:
THOMAS E. MILLER PE 56877, BYRON K. ANDERSON PE 60987
STRUCTURAL ENGINEERING AND INSPECTIONS, INC. EB 9196
16105 N. FLORIDA AVE. STE B, LUTZ, FL 33549

Dwg.#1102061055

Job	Truss	Truss Type	Qty	Ply	LINTON RESIDENCE
L216061	CJ2E	JACK	4	1	Job Reference (optional)

Builders FirstSource, Lake City, Fl 32055

6.300 s Apr 19 2006 MiTek Industries, Inc. Wed Nov 01 14:13:49 2006 Page 1

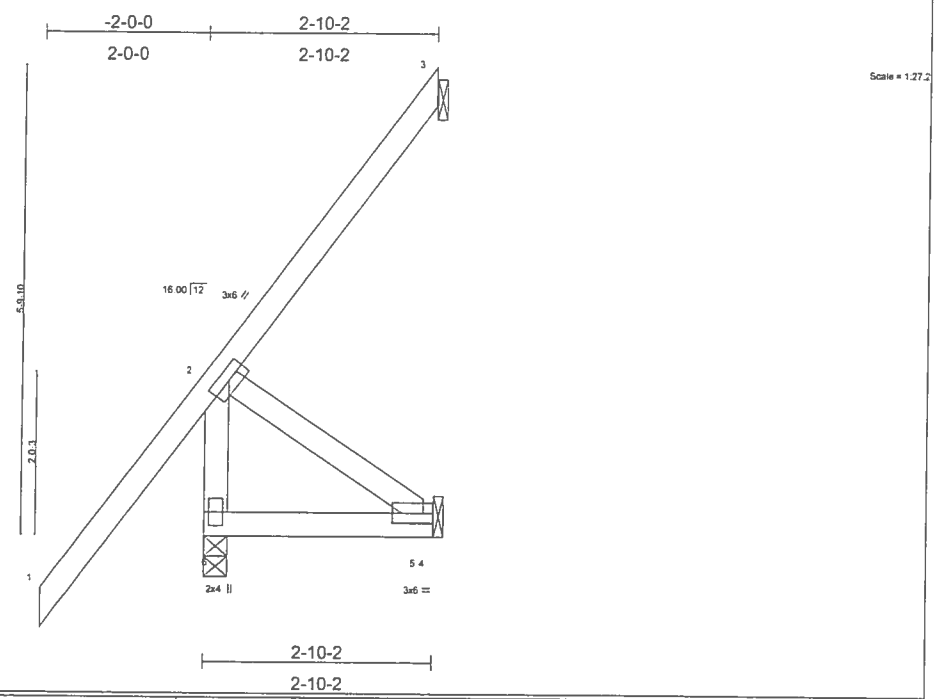

LOADING (psf)		SPACING	2-0-0	CSI		DEFL	in	(loc)	l/defl	L/d	PLATES	GRIP
TCLL	20.0	Plates Increase	1.25	TC	0.64	Vert(LL)	-0.00	5-6	>999	240	MT20	244/190
TCDL	7.0	Lumber Increase	1.25	BC	0.05	Vert(TL)	-0.00	5-6	>999	180		
BCLL	10.0	Rep Stress Incr	YES	WB	0.14	Horz(TL)	-0.01	3	n/a	n/a		
BCDL	5.0	Code FBC2004/TPI2002		(Matrix)							Weight: 24 lb	

LUMBER
TOP CHORD 2 X 4 SYP No.2
BOT CHORD 2 X 4 SYP No.2
WEBS 2 X 4 SYP No.3

BRACING
TOP CHORD Structural wood sheathing directly applied or 2-10-2 oc purlins, except end verticals.
BOT CHORD Rigid ceiling directly applied or 9-4-10 oc bracing.

REACTIONS (lb/size) 6=273/0-3-8, 3=24/Mechanical, 5=44/Mechanical
Max Horz 6=389(load case 5)
Max Uplift6=-32(load case 3), 3=-52(load case 6), 5=-251(load case 5)
Max Grav 6=273(load case 1), 3=65(load case 3), 5=44(load case 1)

FORCES (lb) - Maximum Compression/Maximum Tension
TOP CHORD 2-6=-234/40, 1-2=0/93, 2-3=-95/50
BOT CHORD 5-6=-459/4, 4-5=0/0
WEBS 2-5=-5/562

NOTES
1) Wind: ASCE 7-02; 110mph (3-second gust); h=24ft; TCDL=4.2psf; BCDL=3.0psf; Category II; Exp B; enclosed; MWFRS gable end zone and C-C Exterior(2) zone; end vertical left exposed; Lumber DOL=1.60 plate grip DOL=1.60. This truss is designed for C-C for members and forces, and for MWFRS for reactions specified.
2) Refer to girder(s) for truss to truss connections.
3) Provide mechanical connection (by others) of truss to bearing plate capable of withstanding 32 lb uplift at joint 6, 52 lb uplift at joint 3 and 251 lb uplift at joint 5.

LOAD CASE(S) Standard

NOVEMBER 02, 2006 TRUSS DESIGN ENGINEER:
THOMAS E. MILLER PE 56877, BYRON K. ANDERSON PE 60987
STRUCTURAL ENGINEERING AND INSPECTIONS, INC. EB 9196
16105 N. FLORIDA AVE. STE B, LUTZ, FL 33549

Dwg.#1102061056

Job	Truss	Truss Type	Qty	Ply	LINTON RESIDENCE
L216061	CJ3	JACK	1	1	Job Reference (optional)

Builders FirstSource, Lake City, Fl 32055

6.300 s Apr 19 2006 MiTek Industries, Inc. Wed Nov 01 14:14:33 2006 Page 1

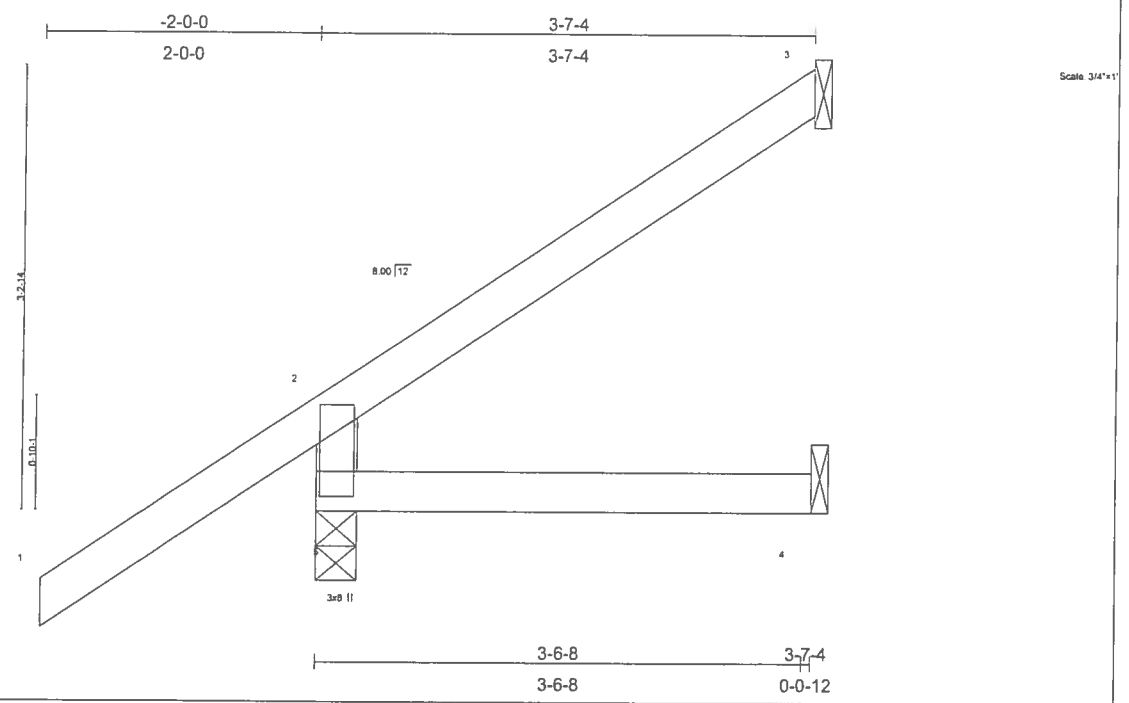

Plate Offsets (X,Y): [5:0-4-8,0-1-8]

LOADING (psf)		SPACING 2-0-0		CSI		DEFL	in	(loc)	l/defl	L/d	PLATES	GRIP
TCLL	20.0	Plates Increase	1.25	TC	0.36	Vert(LL)	-0.00	4-5	>999	240	MT20	244/190
TCDL	7.0	Lumber Increase	1.25	BC	0.07	Vert(TL)	-0.01	4-5	>999	180		
BCLL	10.0	Rep Stress Incr	YES	WB	0.00	Horz(TL)	0.00	3	n/a	n/a		
BCDL	5.0	Code FBC2004/TPI2002		(Matrix)							Weight: 16 lb	

LUMBER
TOP CHORD 2 X 4 SYP No.2
BOT CHORD 2 X 4 SYP No.2
WEBS 2 X 4 SYP No.3

BRACING
TOP CHORD Structural wood sheathing directly applied or 3-7-4 oc purlins, except end verticals.
BOT CHORD Rigid ceiling directly applied or 10-0-0 oc bracing.

REACTIONS (lb/size) 5=295/0-3-8, 3=66/Mechanical, 4=41/Mechanical
Max Horz 5=211(load case 5)
Max Uplift5=-160(load case 5), 3=-72(load case 5), 4=-1(load case 6)

FORCES (lb) - Maximum Compression/Maximum Tension
TOP CHORD 2-5=-234/205, 1-2=0/64, 2-3=-65/26
BOT CHORD 4-5=0/0

NOTES
1) Wind: ASCE 7-02; 110mph (3-second gust); h=24ft; TCDL=4.2psf; BCDL=3.0psf; Category II; Exp B; enclosed; MWFRS gable end zone and C-C Exterior(2) zone; end vertical left exposed; Lumber DOL=1.60 plate grip DOL=1.60. This truss is designed for C-C for members and forces, and for MWFRS for reactions specified.
2) Refer to girder(s) for truss to truss connections.
3) Provide mechanical connection (by others) of truss to bearing plate capable of withstanding 160 lb uplift at joint 5, 72 lb uplift at joint 3 and 1 lb uplift at joint 4.

LOAD CASE(S) Standard

NOVEMBER 02, 2006 TRUSS DESIGN ENGINEER:
THOMAS E. MILLER PE 56877, BYRON K. ANDERSON PE 60987
STRUCTURAL ENGINEERING AND INSPECTIONS, INC. EB 9196
16105 N. FLORIDA AVE. STE B, LUTZ, FL 33549

Dwg.#1102061057

Job	Truss	Truss Type	Qty	Ply	LINTON RESIDENCE
L216061	CJ3A	JACK	4	1	Job Reference (optional)

Builders FirstSource, Lake City, Fl 32055

6.300 s Apr 19 2006 MiTek Industries, Inc. Wed Nov 01 14:14:51 2006 Page 1

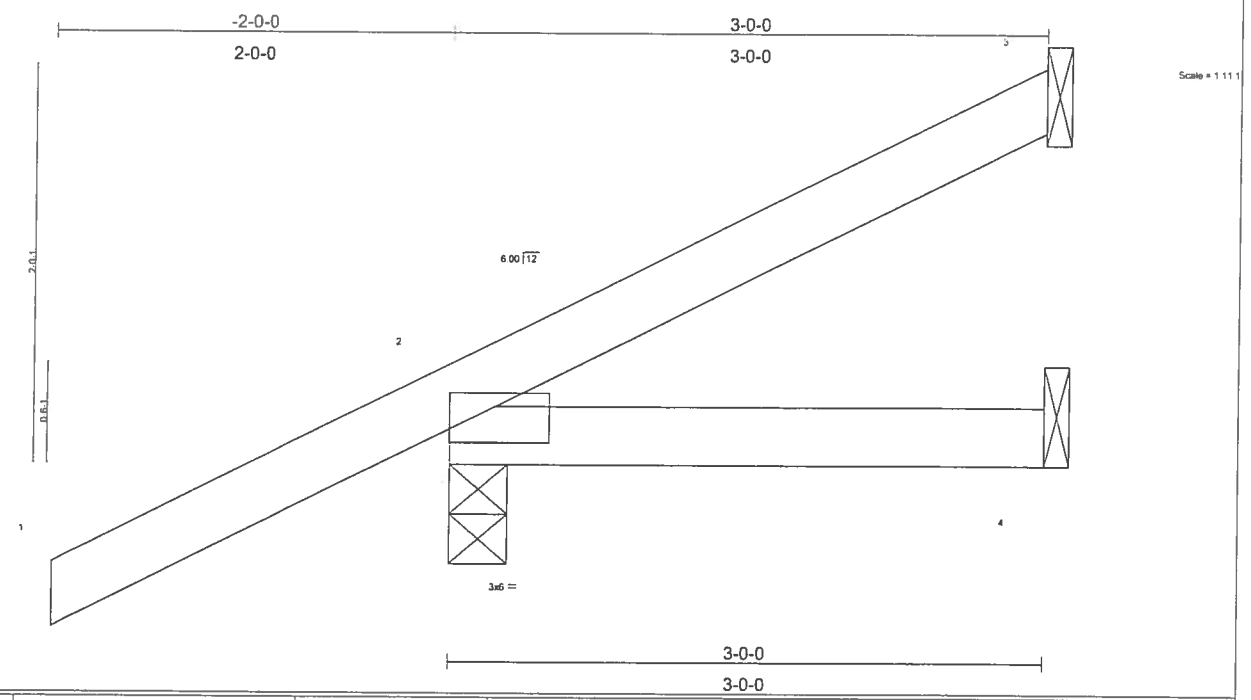

LOADING (psf)		SPACING	2-0-0	CSI		DEFL	in	(loc)	l/defl	L/d	PLATES	GRIP
TCLL	20.0	Plates Increase	1.25	TC	0.28	Vert(LL)	-0.00	2-4	>999	240	MT20	244/190
TCDL	7.0	Lumber Increase	1.25	BC	0.06	Vert(TL)	-0.01	2-4	>999	180		
BCLL	10.0	Rep Stress Incr	YES	WB	0.00	Horz(TL)	-0.00	3	n/a	n/a		
BCDL	5.0	Code FBC2004/TPI2002		(Matrix)							Weight: 13 lb	

LUMBER
TOP CHORD 2 X 4 SYP No.2
BOT CHORD 2 X 4 SYP No.2

BRACING
TOP CHORD Structural wood sheathing directly applied or 3-0-0 oc purlins.
BOT CHORD Rigid ceiling directly applied or 10-0-0 oc bracing.

REACTIONS (lb/size) 3=31/Mechanical, 2=278/0-3-8, 4=42/Mechanical
Max Horz 2=129(load case 5)
Max Uplift3=-32(load case 6), 2=-196(load case 5)

FORCES (lb) - Maximum Compression/Maximum Tension
TOP CHORD 1-2=0/41, 2-3=-61/8
BOT CHORD 2-4=0/0

NOTES
1) Wind: ASCE 7-02; 110mph (3-second gust); h=24ft; TCDL=4.2psf; BCDL=3.0psf; Category II; Exp B; enclosed; MWFRS gable end zone and C-C Exterior(2) zone; end vertical left exposed; Lumber DOL=1.60 plate grip DOL=1.60. This truss is designed for C-C for members and forces, and for MWFRS for reactions specified.
2) Refer to girder(s) for truss to truss connections.
3) Provide mechanical connection (by others) of truss to bearing plate capable of withstanding 32 lb uplift at joint 3 and 196 lb uplift at joint 2.

LOAD CASE(S) Standard

NOVEMBER 02, 2006 TRUSS DESIGN ENGINEER:
THOMAS E. MILLER PE 56877, BYRON K. ANDERSON PE 60987
STRUCTURAL ENGINEERING AND INSPECTIONS, INC. EB 9196
16105 N. FLORIDA AVE. STE B, LUTZ, FL 33549

Dwg.#1102061058

Job	Truss	Truss Type	Qty	Ply	LINTON RESIDENCE
L216061	CJ3B	JACK	2	1	Job Reference (optional)

Builders FirstSource, Lake City, Fl 32055 — 6.300 s Apr 19 2006 MiTek Industries, Inc. Wed Nov 01 14:15:12 2006 Page 1

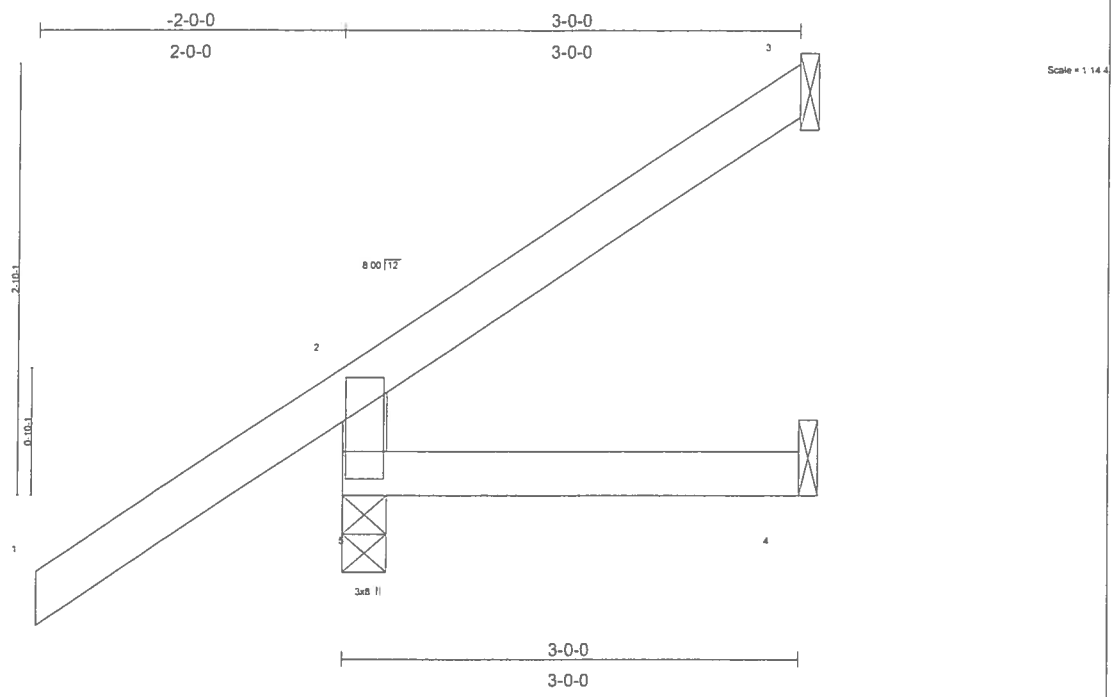

Plate Offsets (X,Y): [5:0-4-8,0-1-8]

LOADING (psf)		SPACING 2-0-0		CSI		DEFL	in	(loc)	l/defl	L/d	PLATES	GRIP
TCLL	20.0	Plates Increase	1.25	TC	0.37	Vert(LL)	-0.00	5	>999	240	MT20	244/190
TCDL	7.0	Lumber Increase	1.25	BC	0.07	Vert(TL)	-0.00	4-5	>999	180		
BCLL	10.0	Rep Stress Incr	YES	WB	0.00	Horz(TL)	0.00	3	n/a	n/a		
BCDL	5.0	Code FBC2004/TPI2002		(Matrix)							Weight: 14 lb	

LUMBER
TOP CHORD 2 X 4 SYP No.2
BOT CHORD 2 X 4 SYP No.2
WEBS 2 X 4 SYP No.3

BRACING
TOP CHORD Structural wood sheathing directly applied or 3-0-0 oc purlins, except end verticals.
BOT CHORD Rigid ceiling directly applied or 10-0-0 oc bracing.

REACTIONS (lb/size) 5=278/0-3-8, 3=45/Mechanical, 4=28/Mechanical
Max Horz 5=192(load case 5)
Max Uplift5=-165(load case 5), 3=-50(load case 5)

FORCES (lb) - Maximum Compression/Maximum Tension
TOP CHORD 2-5=-222/204, 1-2=0/64, 2-3=-59/17
BOT CHORD 4-5=0/0

NOTES
1) Wind: ASCE 7-02; 110mph (3-second gust); h=24ft; TCDL=4.2psf; BCDL=3.0psf; Category II; Exp B; enclosed; MWFRS gable end zone and C-C Exterior(2) zone; end vertical left exposed; Lumber DOL=1.60 plate grip DOL=1.60. This truss is designed for C-C for members and forces, and for MWFRS for reactions specified.
2) Refer to girder(s) for truss to truss connections.
3) Provide mechanical connection (by others) of truss to bearing plate capable of withstanding 165 lb uplift at joint 5 and 50 lb uplift at joint 3.

LOAD CASE(S) Standard

NOVEMBER 02, 2006 TRUSS DESIGN ENGINEER:
THOMAS E. MILLER PE 56877, BYRON K. ANDERSON PE 60987
STRUCTURAL ENGINEERING AND INSPECTIONS, INC. EB 9196
16105 N. FLORIDA AVE. STE B, LUTZ, FL 33549

Dwg.#1102061059

Job	Truss	Truss Type	Qty	Ply	LINTON RESIDENCE
L216061	CJ3C	JACK	4	1	Job Reference (optional)

Builders FirstSource, Lake City, Fl 32055

6.300 s Apr 19 2006 MiTek Industries, Inc. Wed Nov 01 14:15:52 2006 Page 1

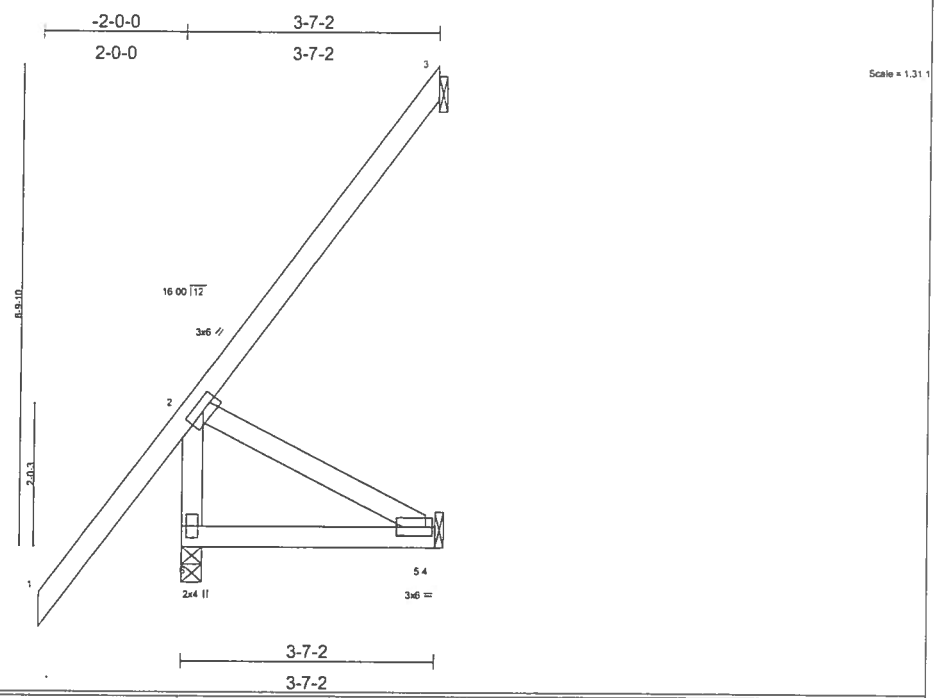

LOADING (psf)		SPACING	2-0-0	CSI		DEFL	in	(loc)	l/defl	L/d	PLATES	GRIP
TCLL	20.0	Plates Increase	1.25	TC	0.64	Vert(LL)	-0.01	5-6	>999	240	MT20	244/190
TCDL	7.0	Lumber Increase	1.25	BC	0.08	Vert(TL)	-0.01	5-6	>999	180		
BCLL	10.0	Rep Stress Incr	YES	WB	0.15	Horz(TL)	-0.01	3	n/a	n/a		
BCDL	5.0	Code FBC2004/TPI2002		(Matrix)							Weight: 27 lb	

LUMBER
TOP CHORD 2 X 4 SYP No.2
BOT CHORD 2 X 4 SYP No.2
WEBS 2 X 4 SYP No.3

BRACING
TOP CHORD Structural wood sheathing directly applied or 3-7-2 oc purlins, except end verticals.
BOT CHORD Rigid ceiling directly applied or 8-9-15 oc bracing.

REACTIONS (lb/size) 6=294/0-3-8, 3=55/Mechanical, 5=55/Mechanical
Max Horz 6=435(load case 5)
Max Uplift6=-26(load case 3), 3=-94(load case 6), 5=-216(load case 5)
Max Grav 6=294(load case 1), 3=70(load case 3), 5=55(load case 1)

FORCES (lb) - Maximum Compression/Maximum Tension
TOP CHORD 2-6=-244/36, 1-2=0/93, 2-3=-123/54
BOT CHORD 5-6=-517/11, 4-5=0/0
WEBS 2-5=-13/589

NOTES
1) Wind: ASCE 7-02; 110mph (3-second gust); h=24ft; TCDL=4.2psf; BCDL=3.0psf; Category II; Exp B; enclosed; MWFRS gable end zone and C-C Exterior(2) zone; end vertical left exposed; Lumber DOL=1.60 plate grip DOL=1.60. This truss is designed for C-C for members and forces, and for MWFRS for reactions specified.
2) Refer to girder(s) for truss to truss connections.
3) Provide mechanical connection (by others) of truss to bearing plate capable of withstanding 26 lb uplift at joint 6, 94 lb uplift at joint 3 and 216 lb uplift at joint 5.

LOAD CASE(S) Standard

NOVEMBER 02, 2006 TRUSS DESIGN ENGINEER:
THOMAS E. MILLER PE 56877, BYRON K. ANDERSON PE 60987
STRUCTURAL ENGINEERING AND INSPECTIONS, INC. EB 9196
16105 N. FLORIDA AVE. STE B, LUTZ, FL 33549

Dwg.#1102061060

Job	Truss	Truss Type	Qty	Ply	LINTON RESIDENCE
L216061	CJ4	JACK	1	1	Job Reference (optional)

Builders FirstSource, Lake City, Fl 32055

6.300 s Apr 19 2006 MiTek Industries, Inc. Wed Nov 01 14:16:20 2006 Page 1

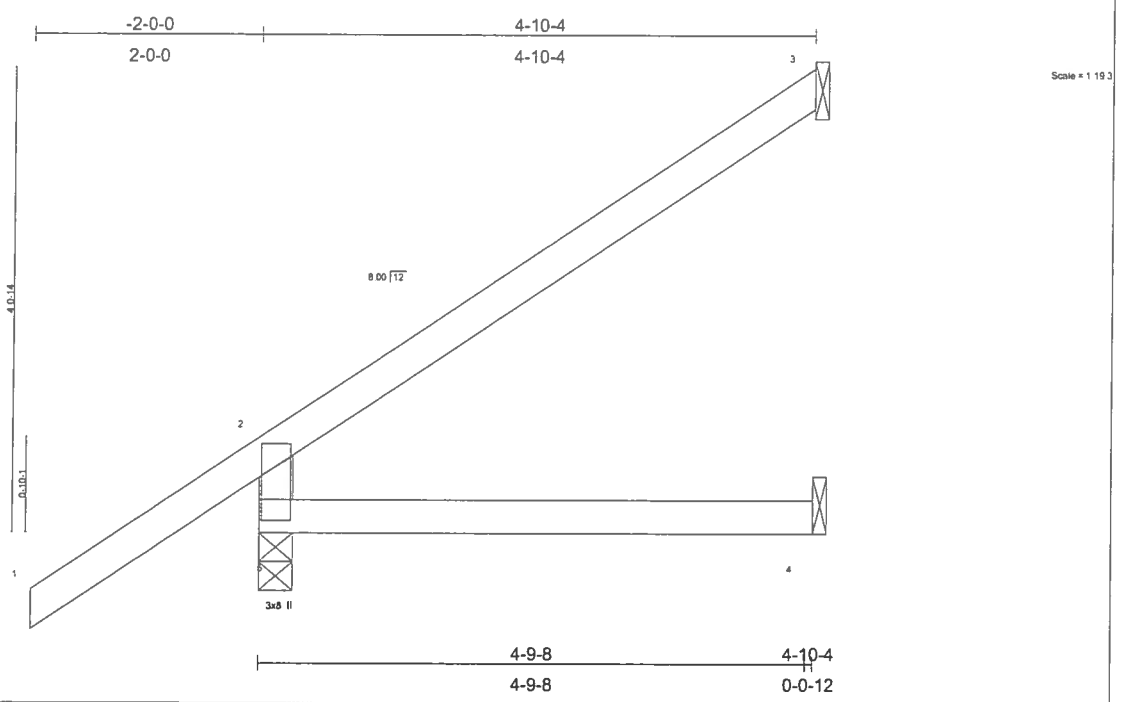

Plate Offsets (X,Y): [5:0-4-8,0-1-8]

LOADING (psf)		SPACING	2-0-0	CSI		DEFL	in	(loc)	l/defl	L/d	PLATES	GRIP
TCLL	20.0	Plates Increase	1.25	TC	0.32	Vert(LL)	-0.02	4-5	>999	240	MT20	244/190
TCDL	7.0	Lumber Increase	1.25	BC	0.13	Vert(TL)	-0.04	4-5	>999	180		
BCLL	10.0	Rep Stress Incr	YES	WB	0.00	Horz(TL)	-0.01	3	n/a	n/a		
BCDL	5.0	Code FBC2004/TPI2002		(Matrix)							Weight: 20 lb	

LUMBER
TOP CHORD 2 X 4 SYP No.2
BOT CHORD 2 X 4 SYP No.2
WEBS 2 X 4 SYP No.3

BRACING
TOP CHORD Structural wood sheathing directly applied or 4-10-4 oc purlins, except end verticals.
BOT CHORD Rigid ceiling directly applied or 10-0-0 oc bracing.

REACTIONS (lb/size) 5=338/0-3-8, 3=103/Mechanical, 4=65/Mechanical
Max Horz 5=250(load case 5)
Max Uplift5=-157(load case 5), 3=-110(load case 5), 4=-1(load case 6)

FORCES (lb) - Maximum Compression/Maximum Tension
TOP CHORD 2-5=-264/215, 1-2=0/64, 2-3=-90/43
BOT CHORD 4-5=0/0

NOTES
1) Wind: ASCE 7-02; 110mph (3-second gust); h=24ft; TCDL=4.2psf; BCDL=3.0psf; Category II; Exp B; enclosed; MWFRS gable end zone and C-C Exterior(2) zone; end vertical left exposed; Lumber DOL=1.60 plate grip DOL=1.60. This truss is designed for C-C for members and forces, and for MWFRS for reactions specified.
2) Refer to girder(s) for truss to truss connections.
3) Provide mechanical connection (by others) of truss to bearing plate capable of withstanding 157 lb uplift at joint 5, 110 lb uplift at joint 3 and 1 lb uplift at joint 4.

LOAD CASE(S) Standard

NOVEMBER 02, 2006 TRUSS DESIGN ENGINEER:
THOMAS E. MILLER PE 56877, BYRON K. ANDERSON PE 60987
STRUCTURAL ENGINEERING AND INSPECTIONS, INC. EB 9196
16105 N. FLORIDA AVE. STE B, LUTZ, FL 33549

Dwg.#1102061061

Job	Truss	Truss Type	Qty	Ply	LINTON RESIDENCE
L216061	CJ4A	JACK	1	1	Job Reference (optional)

Builders FirstSource, Lake City, Fl 32055

6.300 s Apr 19 2006 MiTek Industries, Inc. Wed Nov 01 14:16:51 2006 Page 1

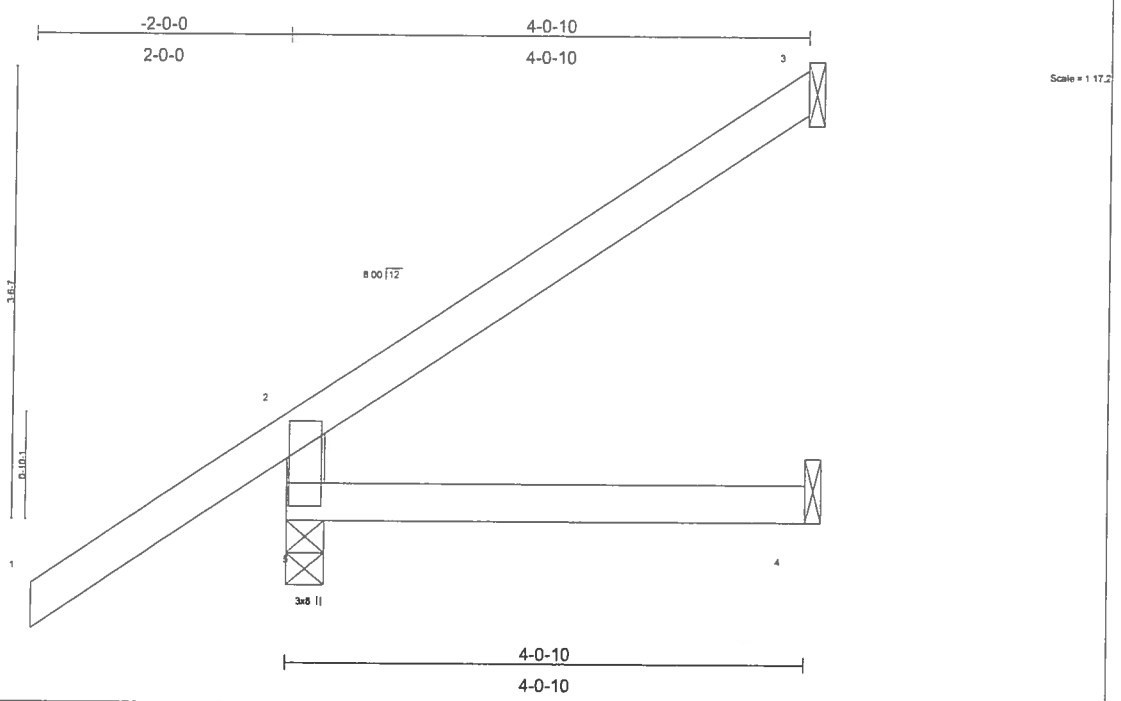

Plate Offsets (X,Y): [5:0-4-8,0-1-8]

LOADING (psf)		SPACING	2-0-0	CSI		DEFL	in	(loc)	l/defl	L/d	PLATES	GRIP
TCLL	20.0	Plates Increase	1.25	TC	0.34	Vert(LL)	-0.01	4-5	>999	240	MT20	244/190
TCDL	7.0	Lumber Increase	1.25	BC	0.08	Vert(TL)	-0.01	4-5	>999	180		
BCLL	10.0	Rep Stress Incr	YES	WB	0.00	Horz(TL)	-0.01	3	n/a	n/a		
BCDL	5.0	Code FBC2004/TPI2002		(Matrix)							Weight: 18 lb	

LUMBER
TOP CHORD 2 X 4 SYP No.2
BOT CHORD 2 X 4 SYP No.2
WEBS 2 X 4 SYP No.3

BRACING
TOP CHORD Structural wood sheathing directly applied or 4-0-10 oc purlins, except end verticals.
BOT CHORD Rigid ceiling directly applied or 10-0-0 oc bracing.

REACTIONS (lb/size) 5=310/0-3-8, 3=79/Mechanical, 4=50/Mechanical
Max Horz 5=225(load case 5)
Max Uplift5=-158(load case 5), 3=-86(load case 5), 4=-1(load case 6)

FORCES (lb) - Maximum Compression/Maximum Tension
TOP CHORD 2-5=-244/208, 1-2=0/64, 2-3=-71/33
BOT CHORD 4-5=0/0

NOTES
1) Wind: ASCE 7-02; 110mph (3-second gust); h=24ft; TCDL=4.2psf; BCDL=3.0psf; Category II; Exp B; enclosed; MWFRS gable end zone and C-C Exterior(2) zone; end vertical left exposed; Lumber DOL=1.60 plate grip DOL=1.60. This truss is designed for C-C for members and forces, and for MWFRS for reactions specified.
2) Refer to girder(s) for truss to truss connections.
3) Provide mechanical connection (by others) of truss to bearing plate capable of withstanding 158 lb uplift at joint 5, 86 lb uplift at joint 3 and 1 lb uplift at joint 4.

LOAD CASE(S) Standard

NOVEMBER 02, 2006 TRUSS DESIGN ENGINEER:
THOMAS E. MILLER PE 56877, BYRON K. ANDERSON PE 60987
STRUCTURAL ENGINEERING AND INSPECTIONS, INC. EB 9196
16105 N. FLORIDA AVE. STE B, LUTZ, FL 33549

Dwg.#1102061062

Job	Truss	Truss Type	Qty	Ply	LINTON RESIDENCE
L216061	CJ4B	JACK	1	1	Job Reference (optional)

Builders FirstSource, Lake City, Fl 32055 — 6.300 s Apr 19 2006 MiTek Industries, Inc. Wed Nov 01 14:17:16 2006 Page 1

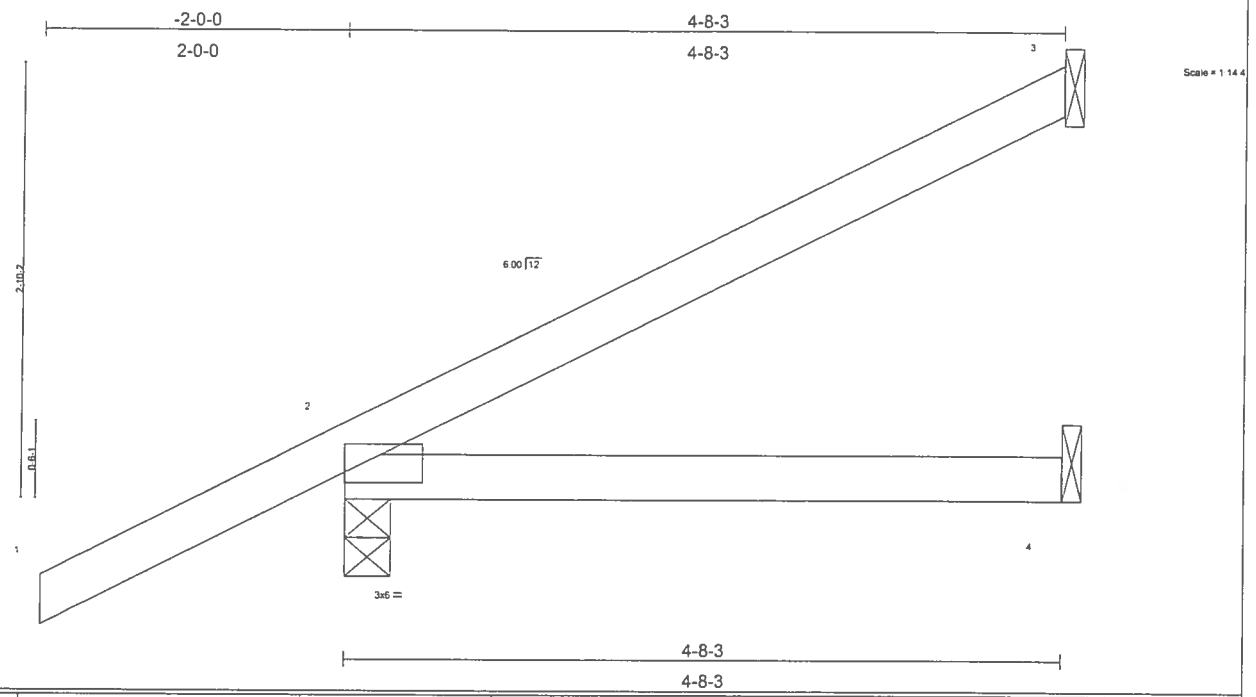

LOADING (psf)		SPACING 2-0-0		CSI		DEFL	in	(loc)	l/defl	L/d	PLATES	GRIP
TCLL	20.0	Plates Increase	1.25	TC	0.28	Vert(LL)	-0.02	2-4	>999	240	MT20	244/190
TCDL	7.0	Lumber Increase	1.25	BC	0.14	Vert(TL)	-0.04	2-4	>999	180		
BCLL	10.0	Rep Stress Incr	YES	WB	0.00	Horz(TL)	-0.00	3	n/a	n/a		
BCDL	5.0	Code FBC2004/TPI2002		(Matrix)							Weight: 18 lb	

LUMBER
TOP CHORD 2 X 4 SYP No.2
BOT CHORD 2 X 4 SYP No.2

BRACING
TOP CHORD Structural wood sheathing directly applied or 4-8-3 oc purlins.
BOT CHORD Rigid ceiling directly applied or 10-0-0 oc bracing.

REACTIONS (lb/size) 3=93/Mechanical, 2=332/0-3-8, 4=67/Mechanical
Max Horz 2=167(load case 5)
Max Uplift3=-83(load case 5), 2=-193(load case 5)

FORCES (lb) - Maximum Compression/Maximum Tension
TOP CHORD 1-2=0/41, 2-3=-88/34
BOT CHORD 2-4=0/0

NOTES
1) Wind: ASCE 7-02; 110mph (3-second gust); h=24ft; TCDL=4.2psf; BCDL=3.0psf; Category II; Exp B; enclosed; MWFRS gable end zone and C-C Exterior(2) zone; end vertical left exposed; Lumber DOL=1.60 plate grip DOL=1.60. This truss is designed for C-C for members and forces, and for MWFRS for reactions specified.
2) Refer to girder(s) for truss to truss connections.
3) Provide mechanical connection (by others) of truss to bearing plate capable of withstanding 83 lb uplift at joint 3 and 193 lb uplift at joint 2.

LOAD CASE(S) Standard

NOVEMBER 02, 2006 TRUSS DESIGN ENGINEER:
THOMAS E. MILLER PE 56877, BYRON K. ANDERSON PE 60987
STRUCTURAL ENGINEERING AND INSPECTIONS, INC. EB 9196
16105 N. FLORIDA AVE. STE B, LUTZ, FL 33549

Dwg.#1102061063

Job	Truss	Truss Type	Qty	Ply	LINTON RESIDENCE
L216061	CJ5	JACK	4	1	Job Reference (optional)

Builders FirstSource, Lake City, Fl 32055 — 6.300 s Apr 19 2006 MiTek Industries, Inc. Wed Nov 01 14:17:36 2006 Page 1

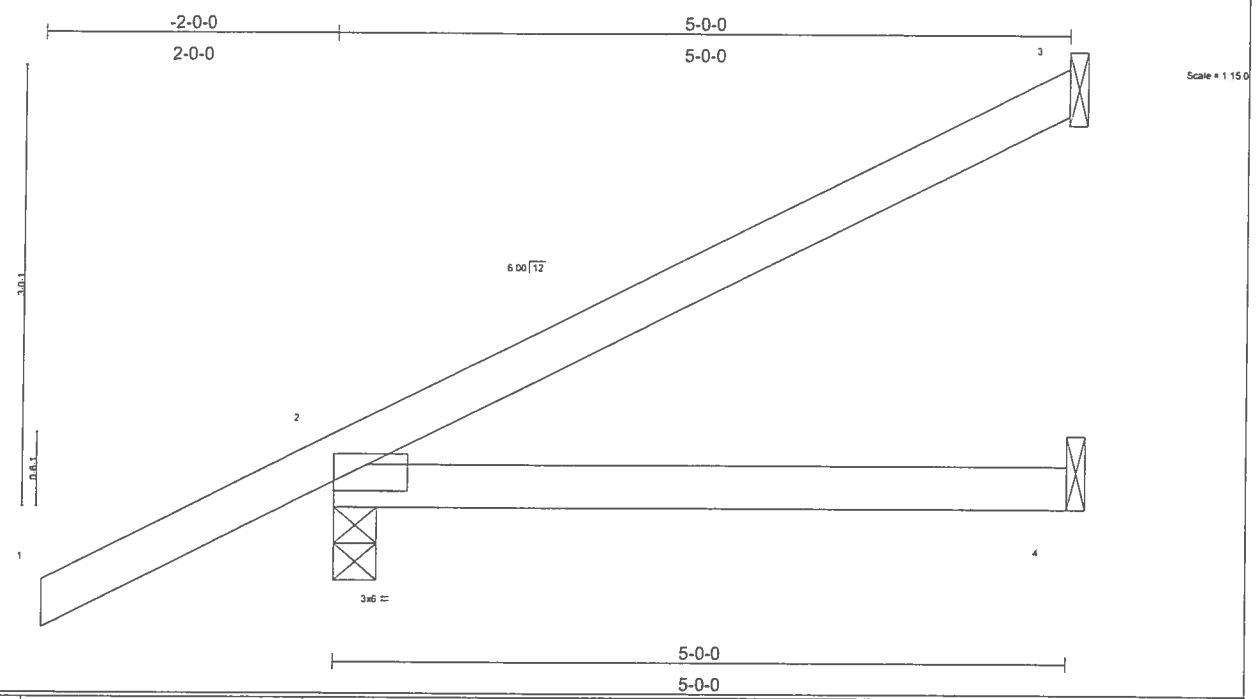

LOADING (psf)		SPACING 2-0-0		CSI		DEFL	in	(loc)	l/defl	L/d	PLATES	GRIP
TCLL	20.0	Plates Increase	1.25	TC	0.28	Vert(LL)	-0.03	2-4	>999	240	MT20	244/190
TCDL	7.0	Lumber Increase	1.25	BC	0.16	Vert(TL)	-0.05	2-4	>999	180		
BCLL	10.0	Rep Stress Incr	YES	WB	0.00	Horz(TL)	-0.00	3	n/a	n/a		
BCDL	5.0	Code FBC2004/TPI2002		(Matrix)							Weight: 19 lb	

LUMBER
TOP CHORD 2 X 4 SYP No.2
BOT CHORD 2 X 4 SYP No.2

BRACING
TOP CHORD Structural wood sheathing directly applied or 5-0-0 oc purlins.
BOT CHORD Rigid ceiling directly applied or 10-0-0 oc bracing.

REACTIONS (lb/size) 3=103/Mechanical, 2=343/0-3-8, 4=72/Mechanical
Max Horz 2=175(load case 5)
Max Uplift3=-93(load case 5), 2=-194(load case 5)

FORCES (lb) - Maximum Compression/Maximum Tension
TOP CHORD 1-2=0/41, 2-3=-96/38
BOT CHORD 2-4=0/0

NOTES
1) Wind: ASCE 7-02; 110mph (3-second gust); h=24ft; TCDL=4.2psf; BCDL=3.0psf; Category II; Exp B; enclosed; MWFRS gable end zone and C-C Exterior(2) zone; end vertical left exposed; Lumber DOL=1.60 plate grip DOL=1.60. This truss is designed for C-C for members and forces, and for MWFRS for reactions specified.
2) Refer to girder(s) for truss to truss connections.
3) Provide mechanical connection (by others) of truss to bearing plate capable of withstanding 93 lb uplift at joint 3 and 194 lb uplift at joint 2.

LOAD CASE(S) Standard

NOVEMBER 02, 2006 TRUSS DESIGN ENGINEER:
THOMAS E. MILLER PE 56877, BYRON K. ANDERSON PE 60987
STRUCTURAL ENGINEERING AND INSPECTIONS, INC. EB 9196
16105 N. FLORIDA AVE. STE B, LUTZ, FL 33549

Dwg.#1102061064

Job	Truss	Truss Type	Qty	Ply	LINTON RESIDENCE
L216061	CJ5A	JACK	2	1	Job Reference (optional)

Builders FirstSource, Lake City, Fl 32055

6.300 s Apr 19 2006 MiTek Industries, Inc. Wed Nov 01 14:18:13 2006 Page 1

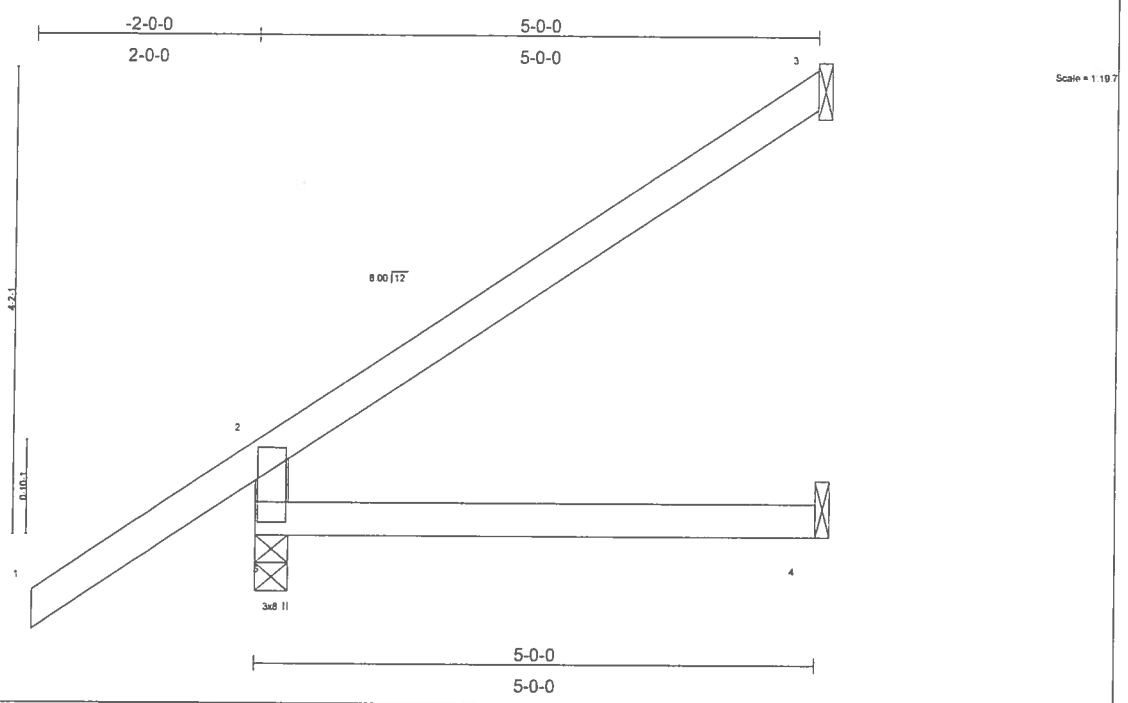

Plate Offsets (X,Y): [5:0-4-8,0-1-8]

LOADING (psf)		SPACING	2-0-0	CSI		DEFL	in	(loc)	l/defl	L/d	PLATES	GRIP
TCLL	20.0	Plates Increase	1.25	TC	0.32	Vert(LL)	-0.02	4-5	>999	240	MT20	244/190
TCDL	7.0	Lumber Increase	1.25	BC	0.15	Vert(TL)	-0.04	4-5	>999	180		
BCLL	10.0	Rep Stress Incr	YES	WB	0.00	Horz(TL)	-0.02	3	n/a	n/a		
BCDL	5.0	Code FBC2004/TPI2002		(Matrix)							Weight: 21 lb	

LUMBER
TOP CHORD 2 X 4 SYP No.2
BOT CHORD 2 X 4 SYP No.2
WEBS 2 X 4 SYP No.3

BRACING
TOP CHORD Structural wood sheathing directly applied or 5-0-0 oc purlins, except end verticals.
BOT CHORD Rigid ceiling directly applied or 10-0-0 oc bracing.

REACTIONS (lb/size) 5=343/0-3-8, 3=107/Mechanical, 4=68/Mechanical
Max Horz 5=254(load case 5)
Max Uplift5=-157(load case 5), 3=-115(load case 5), 4=-1(load case 5)

FORCES (lb) - Maximum Compression/Maximum Tension
TOP CHORD 2-5=-267/216, 1-2=0/64, 2-3=-93/45
BOT CHORD 4-5=0/0

NOTES
1) Wind: ASCE 7-02; 110mph (3-second gust); h=24ft; TCDL=4.2psf; BCDL=3.0psf; Category II; Exp B; enclosed; MWFRS gable end zone and C-C Exterior(2) zone; end vertical left exposed; Lumber DOL=1.60 plate grip DOL=1.60. This truss is designed for C-C for members and forces, and for MWFRS for reactions specified.
2) Refer to girder(s) for truss to truss connections.
3) Provide mechanical connection (by others) of truss to bearing plate capable of withstanding 157 lb uplift at joint 5, 115 lb uplift at joint 3 and 1 lb uplift at joint 4.

LOAD CASE(S) Standard

NOVEMBER 02, 2006 TRUSS DESIGN ENGINEER:
THOMAS E. MILLER PE 56877, BYRON K. ANDERSON PE 60987
STRUCTURAL ENGINEERING AND INSPECTIONS, INC. EB 9196
16105 N. FLORIDA AVE. STE B, LUTZ, FL 33549

Dwg.#1102061065

Job	Truss	Truss Type	Qty	Ply	LINTON RESIDENCE
L216061	CJ6	JACK	1	1	Job Reference (optional)

Builders FirstSource, Lake City, Fl 32055 — 6.300 s Apr 19 2006 MiTek Industries, Inc. Wed Nov 01 14:19:12 2006 Page 1

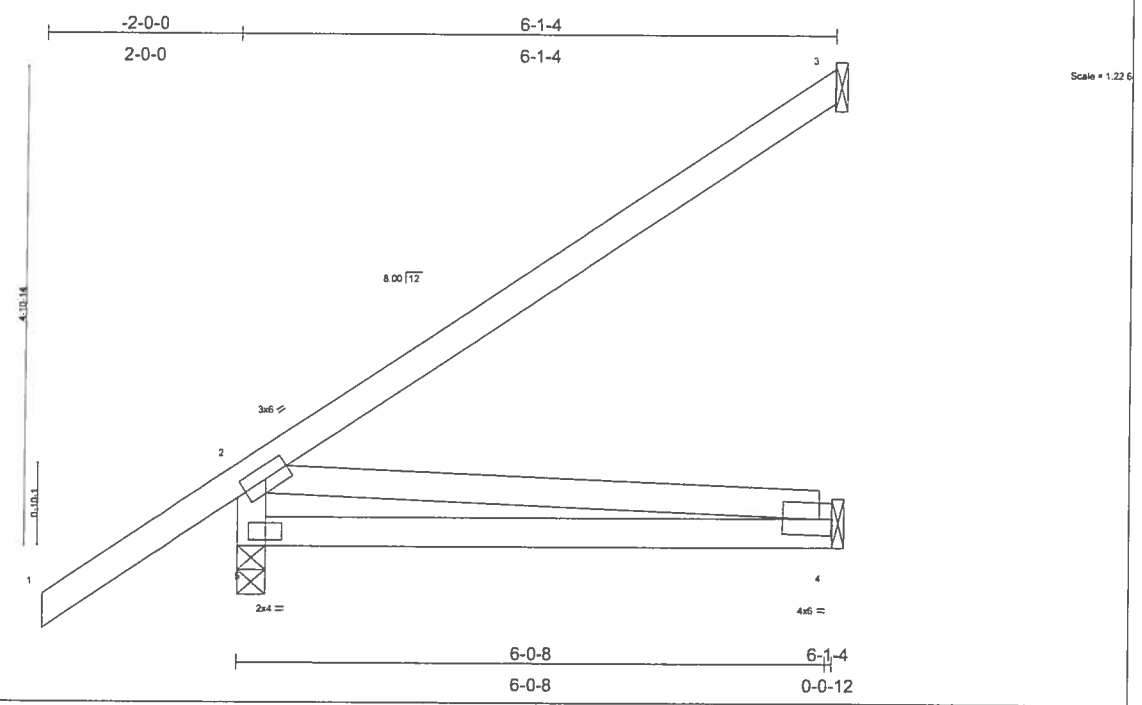

Plate Offsets (X,Y): [4:0-1-7,0-2-0]

LOADING (psf)		SPACING 2-0-0		CSI		DEFL	in	(loc)	l/defl	L/d	PLATES	GRIP
TCLL	20.0	Plates Increase	1.25	TC	0.32	Vert(LL)	-0.07	4-5	>999	240	MT20	244/190
TCDL	7.0	Lumber Increase	1.25	BC	0.25	Vert(TL)	-0.12	4-5	>617	180		
BCLL	10.0	Rep Stress Incr	YES	WB	0.08	Horz(TL)	-0.01	3	n/a	n/a		
BCDL	5.0	Code FBC2004/TPI2002		(Matrix)							Weight: 33 lb	

LUMBER
TOP CHORD 2 X 4 SYP No.2
BOT CHORD 2 X 4 SYP No.2
WEBS 2 X 4 SYP No.3

BRACING
TOP CHORD Structural wood sheathing directly applied or 6-0-0 oc purlins, except end verticals.
BOT CHORD Rigid ceiling directly applied or 10-0-0 oc bracing.

REACTIONS (lb/size) 3=138/Mechanical, 4=89/Mechanical, 5=386/0-3-8
Max Horz 5=288(load case 5)
Max Uplift3=-139(load case 5), 4=-11(load case 5), 5=-158(load case 5)

FORCES (lb) - Maximum Compression/Maximum Tension
TOP CHORD 2-5=-296/202, 1-2=0/64, 2-3=-111/59
BOT CHORD 4-5=-316/0
WEBS 2-4=0/318

NOTES
1) Wind: ASCE 7-02; 110mph (3-second gust); h=24ft; TCDL=4.2psf; BCDL=3.0psf; Category II; Exp B; enclosed; MWFRS gable end zone and C-C Exterior(2) zone; end vertical left exposed; Lumber DOL=1.60 plate grip DOL=1.60. This truss is designed for C-C for members and forces, and for MWFRS for reactions specified.
2) Refer to girder(s) for truss to truss connections.
3) Bearing at joint(s) 5 considers parallel to grain value using ANSI/TPI 1 angle to grain formula. Building designer should verify capacity of bearing surface.
4) Provide mechanical connection (by others) of truss to bearing plate capable of withstanding 139 lb uplift at joint 3, 11 lb uplift at joint 4 and 158 lb uplift at joint 5.

LOAD CASE(S) Standard

NOVEMBER 02, 2006 TRUSS DESIGN ENGINEER:
THOMAS E. MILLER PE 56877, BYRON K. ANDERSON PE 60987
STRUCTURAL ENGINEERING AND INSPECTIONS, INC. EB 9196
16105 N. FLORIDA AVE. STE B, LUTZ, FL 33549

Dwg.#1102061066

Job	Truss	Truss Type	Qty	Ply	LINTON RESIDENCE
L216061	CJ6A	JACK	1	1	Job Reference (optional)

Builders FirstSource, Lake City, Fl 32055 — 6.300 s Apr 19 2006 MiTek Industries, Inc. Wed Nov 01 14:20:02 2006 Page 1

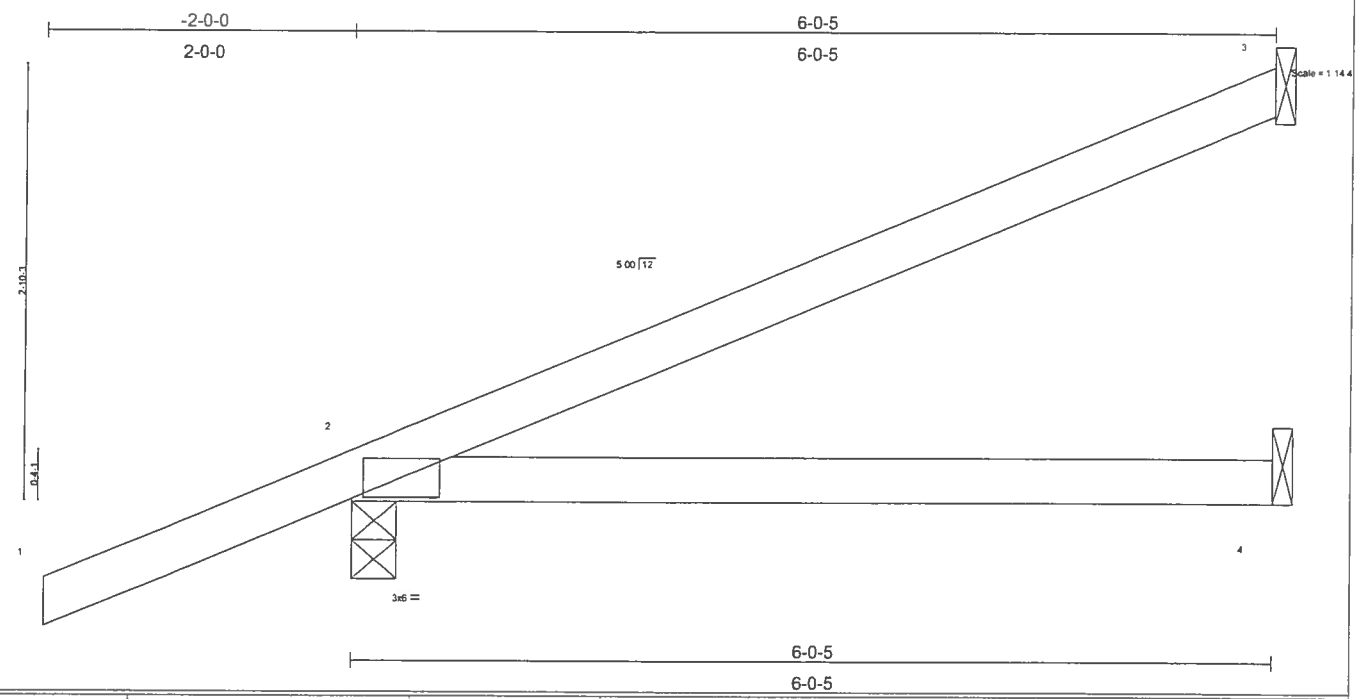

LOADING (psf)		SPACING 2-0-0		CSI		DEFL	in	(loc)	l/defl	L/d	PLATES	GRIP
TCLL	20.0	Plates Increase	1.25	TC	0.31	Vert(LL)	-0.06	2-4	>999	240	MT20	244/190
TCDL	7.0	Lumber Increase	1.25	BC	0.24	Vert(TL)	-0.11	2-4	>664	180		
BCLL	10.0	Rep Stress Incr	YES	WB	0.00	Horz(TL)	-0.00	3	n/a	n/a		
BCDL	5.0	Code FBC2004/TPI2002		(Matrix)							Weight: 22 lb	

LUMBER
TOP CHORD 2 X 4 SYP No.2
BOT CHORD 2 X 4 SYP No.2

BRACING
TOP CHORD Structural wood sheathing directly applied or 6-0-0 oc purlins.
BOT CHORD Rigid ceiling directly applied or 10-0-0 oc bracing.

REACTIONS (lb/size) 3=136/Mechanical, 2=382/0-3-8, 4=87/Mechanical
Max Horz 2=168(load case 5)
Max Uplift3=-109(load case 5), 2=-213(load case 5)

FORCES (lb) - Maximum Compression/Maximum Tension
TOP CHORD 1-2=0/40, 2-3=-90/41
BOT CHORD 2-4=0/0

NOTES
1) Wind: ASCE 7-02; 110mph (3-second gust); h=24ft; TCDL=4.2psf; BCDL=3.0psf; Category II; Exp B; enclosed; MWFRS gable end zone and C-C Exterior(2) zone; end vertical left exposed; Lumber DOL=1.60 plate grip DOL=1.60. This truss is designed for C-C for members and forces, and for MWFRS for reactions specified.
2) Refer to girder(s) for truss to truss connections.
3) Provide mechanical connection (by others) of truss to bearing plate capable of withstanding 109 lb uplift at joint 3 and 213 lb uplift at joint 2.

LOAD CASE(S) Standard

NOVEMBER 02, 2006 TRUSS DESIGN ENGINEER:
THOMAS E. MILLER PE 56877, BYRON K. ANDERSON PE 60987
STRUCTURAL ENGINEERING AND INSPECTIONS, INC. EB 9196
16105 N. FLORIDA AVE. STE B, LUTZ, FL 33549

Dwg.#1102061067

Job	Truss	Truss Type	Qty	Ply	LINTON RESIDENCE
L216061	CJ6B	JACK	4	1	Job Reference (optional)

Builders FirstSource, Lake City, Fl 32055 — 6.300 s Apr 19 2006 MiTek Industries, Inc. Wed Nov 01 14:20:39 2006 Page 1

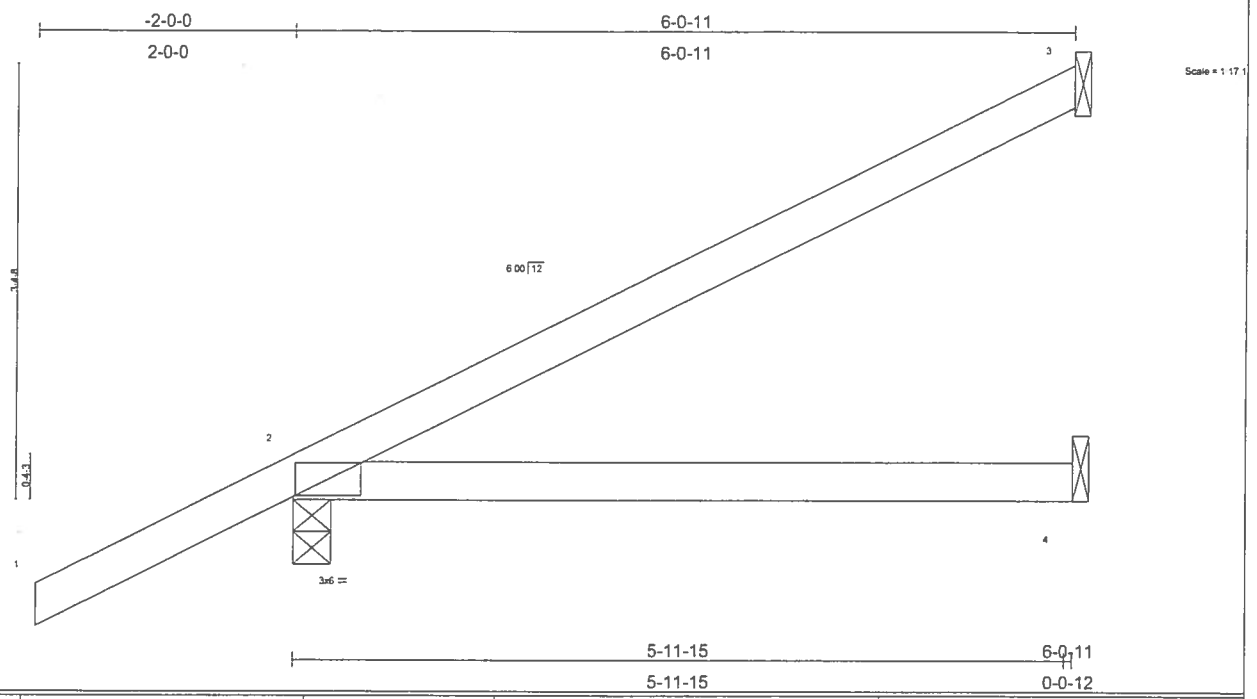

LOADING (psf)		SPACING 2-0-0		CSI		DEFL	in	(loc)	l/defl	L/d	PLATES	GRIP
TCLL	20.0	Plates Increase	1.25	TC	0.34	Vert(LL)	-0.06	2-4	>999	240	MT20	244/190
TCDL	7.0	Lumber Increase	1.25	BC	0.24	Vert(TL)	-0.11	2-4	>653	180		
BCLL	10.0	Rep Stress Incr	YES	WB	0.00	Horz(TL)	-0.00	3	n/a	n/a		
BCDL	5.0	Code FBC2004/TPI2002		(Matrix)							Weight: 23 lb	

LUMBER
TOP CHORD 2 X 4 SYP No.2
BOT CHORD 2 X 4 SYP No.2

BRACING
TOP CHORD Structural wood sheathing directly applied or 6-0-0 oc purlins.
BOT CHORD Rigid ceiling directly applied or 10-0-0 oc bracing.

REACTIONS (lb/size) 3=137/Mechanical, 2=383/0-3-8, 4=88/Mechanical
Max Horz 2=202(load case 5)
Max Uplift3=-119(load case 5), 2=-204(load case 5)

FORCES (lb) - Maximum Compression/Maximum Tension
TOP CHORD 1-2=0/47, 2-3=-111/48
BOT CHORD 2-4=0/0

NOTES
1) Wind: ASCE 7-02; 110mph (3-second gust); h=24ft; TCDL=4.2psf; BCDL=3.0psf; Category II; Exp B; enclosed; MWFRS gable end zone and C-C Exterior(2) zone; end vertical left exposed; Lumber DOL=1.60 plate grip DOL=1.60. This truss is designed for C-C for members and forces, and for MWFRS for reactions specified.
2) Refer to girder(s) for truss to truss connections.
3) Provide mechanical connection (by others) of truss to bearing plate capable of withstanding 119 lb uplift at joint 3 and 204 lb uplift at joint 2.

LOAD CASE(S) Standard

NOVEMBER 02, 2006 TRUSS DESIGN ENGINEER:
THOMAS E. MILLER PE 56877, BYRON K. ANDERSON PE 60987
STRUCTURAL ENGINEERING AND INSPECTIONS, INC. EB 9196
16105 N. FLORIDA AVE. STE B, LUTZ, FL 33549

Dwg.#1102061068

Job	Truss	Truss Type	Qty	Ply	LINTON RESIDENCE
L216061	CJ9	JACK	1	1	Job Reference (optional)

Builders FirstSource, Lake City, Fl 32055 — 6.300 s Apr 19 2006 MiTek Industnes, Inc. Wed Nov 01 14:23:46 2006 Page 1

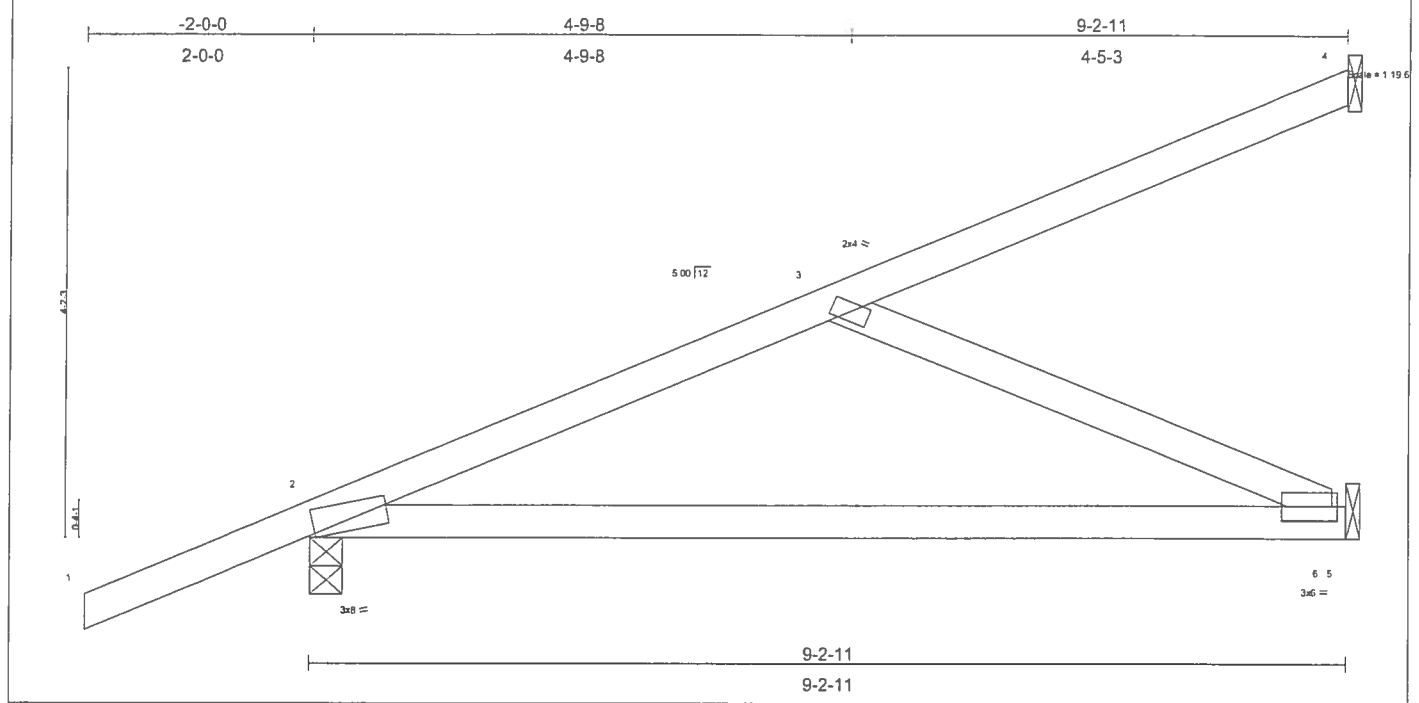

Plate Offsets (X,Y): [2:0-0-8,Edge]

LOADING (psf)		SPACING 2-0-0		CSI		DEFL	in	(loc)	l/defl	L/d	PLATES	GRIP
TCLL	20.0	Plates Increase	1.25	TC	0.28	Vert(LL)	-0.19	2-6	>555	240	MT20	244/190
TCDL	7.0	Lumber Increase	1.25	BC	0.45	Vert(TL)	-0.34	2-6	>315	180		
BCLL	10.0	Rep Stress Incr	YES	WB	0.18	Horz(TL)	0.01	6	n/a	n/a		
BCDL	5.0	Code FBC2004/TPI2002		(Matrix)							Weight: 39 lb	

LUMBER
TOP CHORD 2 X 4 SYP No.2
BOT CHORD 2 X 4 SYP No.2
WEBS 2 X 4 SYP No.3

BRACING
TOP CHORD Structural wood sheathing directly applied or 6-0-0 oc purlins.
BOT CHORD Rigid ceiling directly applied or 10-0-0 oc bracing.

REACTIONS (lb/size) 4=90/Mechanical, 2=506/0-3-8, 6=280/Mechanical
Max Horz 2=229(load case 5)
Max Uplift4=-89(load case 5), 2=-242(load case 5), 6=-75(load case 5)

FORCES (lb) - Maximum Compression/Maximum Tension
TOP CHORD 1-2=0/40, 2-3=-432/189, 3-4=-61/25
BOT CHORD 2-6=-333/380, 5-6=0/0
WEBS 3-6=-414/363

NOTES
1) Wind: ASCE 7-02; 110mph (3-second gust); h=24ft; TCDL=4.2psf; BCDL=3.0psf; Category II; Exp B; enclosed; MWFRS gable end zone and C-C Exterior(2) zone; end vertical left exposed; Lumber DOL=1.60 plate grip DOL=1.60. This truss is designed for C-C for members and forces, and for MWFRS for reactions specified.
2) Refer to girder(s) for truss to truss connections.
3) Provide mechanical connection (by others) of truss to bearing plate capable of withstanding 89 lb uplift at joint 4, 242 lb uplift at joint 2 and 75 lb uplift at joint 6.

LOAD CASE(S) Standard

NOVEMBER 02, 2006 TRUSS DESIGN ENGINEER:
THOMAS E. MILLER PE 56877, BYRON K. ANDERSON PE 60987
STRUCTURAL ENGINEERING AND INSPECTIONS, INC. EB 9196
16105 N. FLORIDA AVE. STE B, LUTZ, FL 33549

Dwg.#1102061069

Job	Truss	Truss Type	Qty	Ply	LINTON RESIDENCE
L216061	EJ4	MONO TRUSS	2	1	Job Reference (optional)

Builders FirstSource, Lake City, Fl 32055 — 6.300 s Apr 19 2006 MiTek Industries, Inc. Wed Nov 01 14:24:25 2006 Page 1

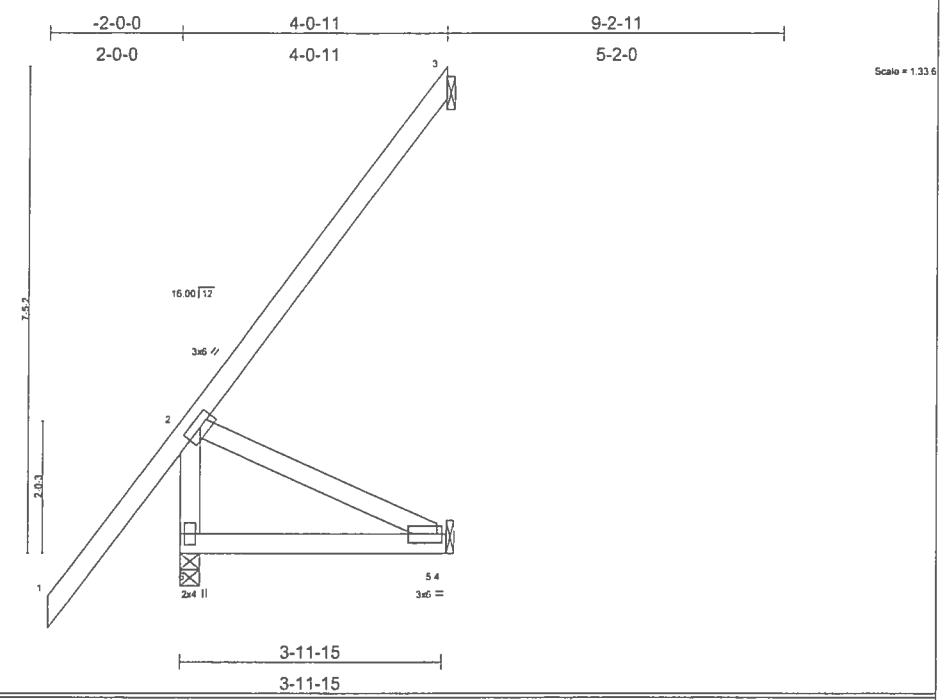

LOADING (psf)		SPACING 2-0-0		CSI		DEFL	in	(loc)	l/defl	L/d	PLATES	GRIP
TCLL	20.0	Plates Increase	1.25	TC	0.64	Vert(LL)	-0.01	5-6	>999	240	MT20	244/190
TCDL	7.0	Lumber Increase	1.25	BC	0.10	Vert(TL)	-0.02	5-6	>999	180		
BCLL	10.0	Rep Stress Incr	YES	WB	0.14	Horz(TL)	-0.01	3	n/a	n/a		
BCDL	5.0	Code FBC2004/TPI2002		(Matrix)							Weight: 30 lb	

LUMBER
TOP CHORD 2 X 4 SYP No.2
BOT CHORD 2 X 4 SYP No.2
WEBS 2 X 4 SYP No.3

BRACING
TOP CHORD Structural wood sheathing directly applied or 4-0-11 oc purlins, except end verticals.
BOT CHORD Rigid ceiling directly applied or 8-11-14 oc bracing.

REACTIONS (lb/size) 3=72/Mechanical, 6=309/0-3-8, 5=62/Mechanical
Max Horz 6=464(load case 5)
Max Uplift3=-128(load case 5), 6=-23(load case 3), 5=-200(load case 5)
Max Grav 3=74(load case 3), 6=309(load case 1), 5=62(load case 1)

FORCES (lb) - Maximum Compression/Maximum Tension
TOP CHORD 1-2=0/93, 2-3=-128/56, 2-6=-252/34
BOT CHORD 5-6=-496/16, 4-5=0/0
WEBS 2-5=-17/551

NOTES
1) Wind: ASCE 7-02; 110mph (3-second gust); h=24ft; TCDL=4.2psf; BCDL=3.0psf; Category II; Exp B; enclosed; MWFRS gable end zone and C-C Interior(1) zone; end vertical left exposed; Lumber DOL=1.60 plate grip DOL=1.60. This truss is designed for C-C for members and forces, and for MWFRS for reactions specified.
2) Refer to girder(s) for truss to truss connections.
3) Provide mechanical connection (by others) of truss to bearing plate capable of withstanding 128 lb uplift at joint 3, 23 lb uplift at joint 6 and 200 lb uplift at joint 5.

LOAD CASE(S) Standard

NOVEMBER 02, 2006 TRUSS DESIGN ENGINEER:
THOMAS E. MILLER PE 56877, BYRON K. ANDERSON PE 60987
STRUCTURAL ENGINEERING AND INSPECTIONS, INC. EB 9196
16105 N. FLORIDA AVE. STE B, LUTZ, FL 33549

Dwg.#1102061070

Job	Truss	Truss Type	Qty	Ply	LINTON RESIDENCE
L216061	EJ5	MONO TRUSS	6	1	Job Reference (optional)

Builders FirstSource, Lake City, Fl 32055

6.300 s Apr 19 2006 MiTek Industries, Inc. Wed Nov 01 14:25:11 2006 Page 1

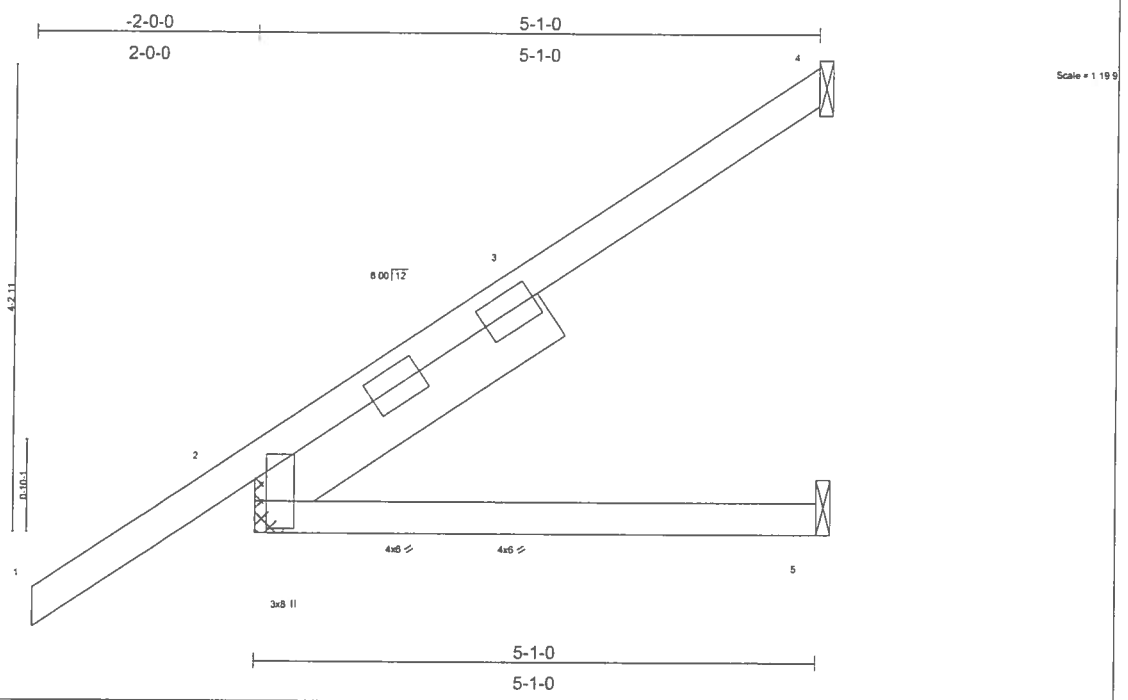

Plate Offsets (X,Y): [2:0-3-0,0-1-3]

LOADING (psf)		SPACING	2-0-0	CSI		DEFL	in	(loc)	l/defl	L/d	PLATES	GRIP
TCLL	20.0	Plates Increase	1.25	TC	0.23	Vert(LL)	-0.03	2-5	>999	240	MT20	244/190
TCDL	7.0	Lumber Increase	1.25	BC	0.18	Vert(TL)	-0.06	2-5	>999	180		
BCLL	10.0	Rep Stress Incr	YES	WB	0.00	Horz(TL)	-0.01	4	n/a	n/a		
BCDL	5.0	Code FBC2004/TPI2002		(Matrix)							Weight: 28 lb	

LUMBER
TOP CHORD 2 X 4 SYP No.2
BOT CHORD 2 X 4 SYP No.2
SLIDER Left 2 X 6 SYP No.1D 3-1-15

BRACING
TOP CHORD Structural wood sheathing directly applied or 5-1-0 oc purlins.
BOT CHORD Rigid ceiling directly applied or 10-0-0 oc bracing.

REACTIONS (lb/size) 4=114/Mechanical, 2=340/Mechanical, 5=75/Mechanical
Max Horz 2=231(load case 5)
Max Uplift4=-137(load case 5), 2=-150(load case 5)

FORCES (lb) - Maximum Compression/Maximum Tension
TOP CHORD 1-2=0/41, 2-3=-104/10, 3-4=-87/47
BOT CHORD 2-5=0/0

NOTES
1) Wind: ASCE 7-02; 110mph (3-second gust); h=24ft; TCDL=4.2psf; BCDL=3.0psf; Category II; Exp B; enclosed; MWFRS gable end zone and C-C Interior(1) zone; end vertical left exposed; Lumber DOL=1.60 plate grip DOL=1.60. This truss is designed for C-C for members and forces, and for MWFRS for reactions specified.
2) Refer to girder(s) for truss to truss connections.
3) Refer to girder(s) for truss to truss connections.
4) Provide mechanical connection (by others) of truss to bearing plate capable of withstanding 137 lb uplift at joint 4 and 150 lb uplift at joint 2.

LOAD CASE(S) Standard

NOVEMBER 02, 2006 TRUSS DESIGN ENGINEER:
THOMAS E. MILLER PE 56877, BYRON K. ANDERSON PE 60987
STRUCTURAL ENGINEERING AND INSPECTIONS, INC. EB 9196
16105 N. FLORIDA AVE. STE B, LUTZ, FL 33549

Dwg.#1102061071

Job	Truss	Truss Type	Qty	Ply	LINTON RESIDENCE
L216061	EJ7	MONO TRUSS	24	1	Job Reference (optional)

Builders FirstSource, Lake City, Fl 32055

6.300 s Apr 19 2006 MiTek Industries, Inc. Wed Nov 01 14:25:49 2006 Page 1

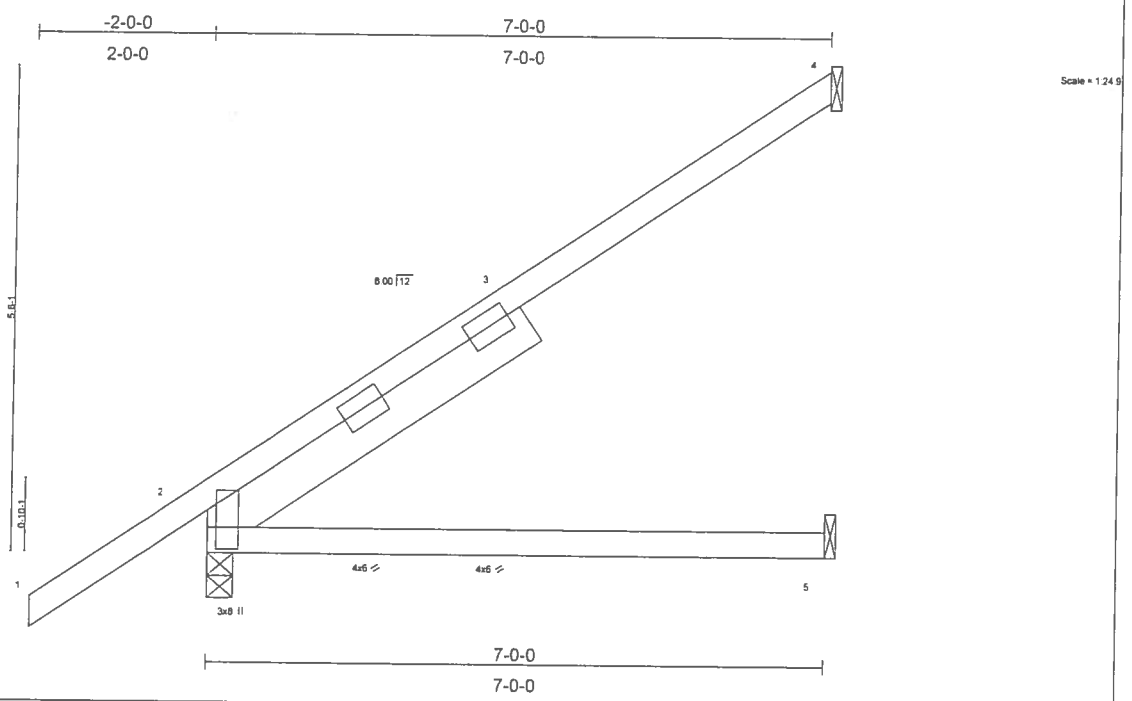

Plate Offsets (X,Y): [2:0-3-0,0-1-3]

LOADING (psf)		SPACING	2-0-0	CSI		DEFL	in	(loc)	l/defl	L/d	PLATES	GRIP
TCLL	20.0	Plates Increase	1.25	TC	0.53	Vert(LL)	-0.11	2-5	>771	240	MT20	244/190
TCDL	7.0	Lumber Increase	1.25	BC	0.30	Vert(TL)	-0.18	2-5	>465	180		
BCLL	10.0	Rep Stress Incr	YES	WB	0.00	Horz(TL)	0.03	4	n/a	n/a		
BCDL	5.0	Code FBC2004/TPI2002		(Matrix)							Weight: 37 lb	

LUMBER
TOP CHORD 2 X 4 SYP No.2
BOT CHORD 2 X 4 SYP No.2
SLIDER Left 2 X 6 SYP No.1D 4-3-12

BRACING
TOP CHORD Structural wood sheathing directly applied or 6-0-0 oc purlins.
BOT CHORD Rigid ceiling directly applied or 10-0-0 oc bracing.

REACTIONS (lb/size) 4=178/Mechanical, 2=415/0-3-8, 5=98/Mechanical
Max Horz 2=290(load case 5)
Max Uplift4=-178(load case 5), 2=-154(load case 5), 5=-1(load case 5)

FORCES (lb) - Maximum Compression/Maximum Tension
TOP CHORD 1-2=0/41, 2-3=-130/12, 3-4=-113/77
BOT CHORD 2-5=0/0

NOTES
1) Wind: ASCE 7-02; 110mph (3-second gust); h=24ft; TCDL=4.2psf; BCDL=3.0psf; Category II; Exp B; enclosed; MWFRS gable end zone and C-C Interior(1) zone; end vertical left exposed; Lumber DOL=1.60 plate grip DOL=1.60. This truss is designed for C-C for members and forces, and for MWFRS for reactions specified.
2) Refer to girder(s) for truss to truss connections.
3) Provide mechanical connection (by others) of truss to bearing plate capable of withstanding 178 lb uplift at joint 4, 154 lb uplift at joint 2 and 1 lb uplift at joint 5.

LOAD CASE(S) Standard

NOVEMBER 02, 2006 TRUSS DESIGN ENGINEER:
THOMAS E. MILLER PE 56877, BYRON K. ANDERSON PE 60987
STRUCTURAL ENGINEERING AND INSPECTIONS, INC. EB 9196
16105 N. FLORIDA AVE. STE B, LUTZ, FL 33549

Dwg.#1102061072

Job	Truss	Truss Type	Qty	Ply	LINTON RESIDENCE
L216061	EJ7A	MONO TRUSS	2	1	Job Reference (optional)

Builders FirstSource, Lake City, Fl 32055 — 6.300 s Apr 19 2006 MiTek Industries, Inc. Wed Nov 01 14:26:34 2006 Page 1

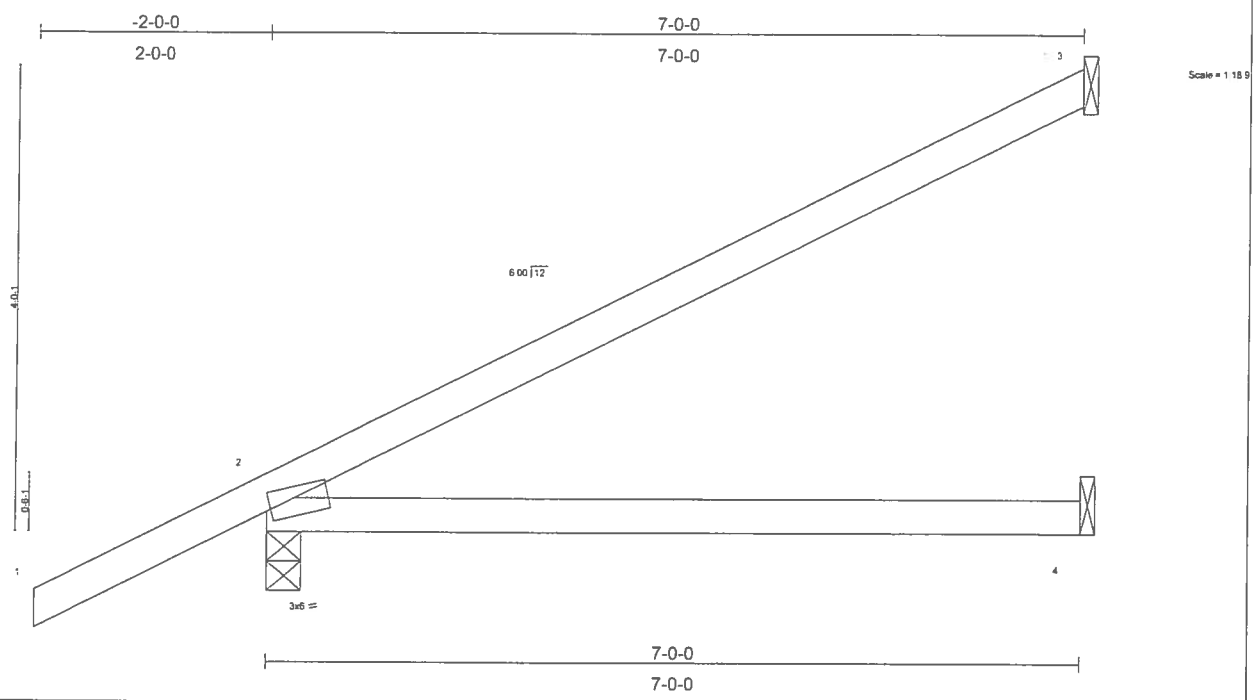

Plate Offsets (X,Y): [2:0-1-1,0-1-8]

LOADING (psf)		SPACING 2-0-0		CSI		DEFL	in	(loc)	l/defl	L/d	PLATES	GRIP
TCLL	20.0	Plates Increase	1.25	TC	0.44	Vert(LL)	-0.12	2-4	>662	240	MT20	244/190
TCDL	7.0	Lumber Increase	1.25	BC	0.35	Vert(TL)	-0.21	2-4	>396	180		
BCLL	10.0	Rep Stress Incr	YES	WB	0.00	Horz(TL)	-0.00	3	n/a	n/a		
BCDL	5.0	Code FBC2004/TPI2002		(Matrix)							Weight: 26 lb	

LUMBER
TOP CHORD 2 X 4 SYP No.2
BOT CHORD 2 X 4 SYP No.2

BRACING
TOP CHORD Structural wood sheathing directly applied or 6-0-0 oc purlins.
BOT CHORD Rigid ceiling directly applied or 10-0-0 oc bracing.

REACTIONS (lb/size) 3=162/Mechanical, 2=419/0-3-8, 4=105/Mechanical
Max Horz 2=221(load case 5)
Max Uplift3=-138(load case 5), 2=-205(load case 5)

FORCES (lb) - Maximum Compression/Maximum Tension
TOP CHORD 1-2=0/41, 2-3=-97/60
BOT CHORD 2-4=0/0

NOTES
1) Wind: ASCE 7-02; 110mph (3-second gust); h=24ft; TCDL=4.2psf; BCDL=3.0psf; Category II; Exp B; enclosed; MWFRS gable end zone and C-C Interior(1) zone; end vertical left exposed; Lumber DOL=1.60 plate grip DOL=1.60. This truss is designed for C-C for members and forces, and for MWFRS for reactions specified.
2) Refer to girder(s) for truss to truss connections.
3) Provide mechanical connection (by others) of truss to bearing plate capable of withstanding 138 lb uplift at joint 3 and 205 lb uplift at joint 2.

LOAD CASE(S) Standard

NOVEMBER 02, 2006 TRUSS DESIGN ENGINEER:
THOMAS E. MILLER PE 56877, BYRON K. ANDERSON PE 60987
STRUCTURAL ENGINEERING AND INSPECTIONS, INC. EB 9196
16105 N. FLORIDA AVE. STE B, LUTZ, FL 33549

Dwg.#1102061073

Job	Truss	Truss Type	Qty	Ply	LINTON RESIDENCE
L216061	HJ11	MONO TRUSS	4	1	Job Reference (optional)

Builders FirstSource, Lake City, Fl 32055 — 6.300 s Apr 19 2006 MiTek Industries, Inc. Wed Nov 01 17:09:14 2006 Page 1

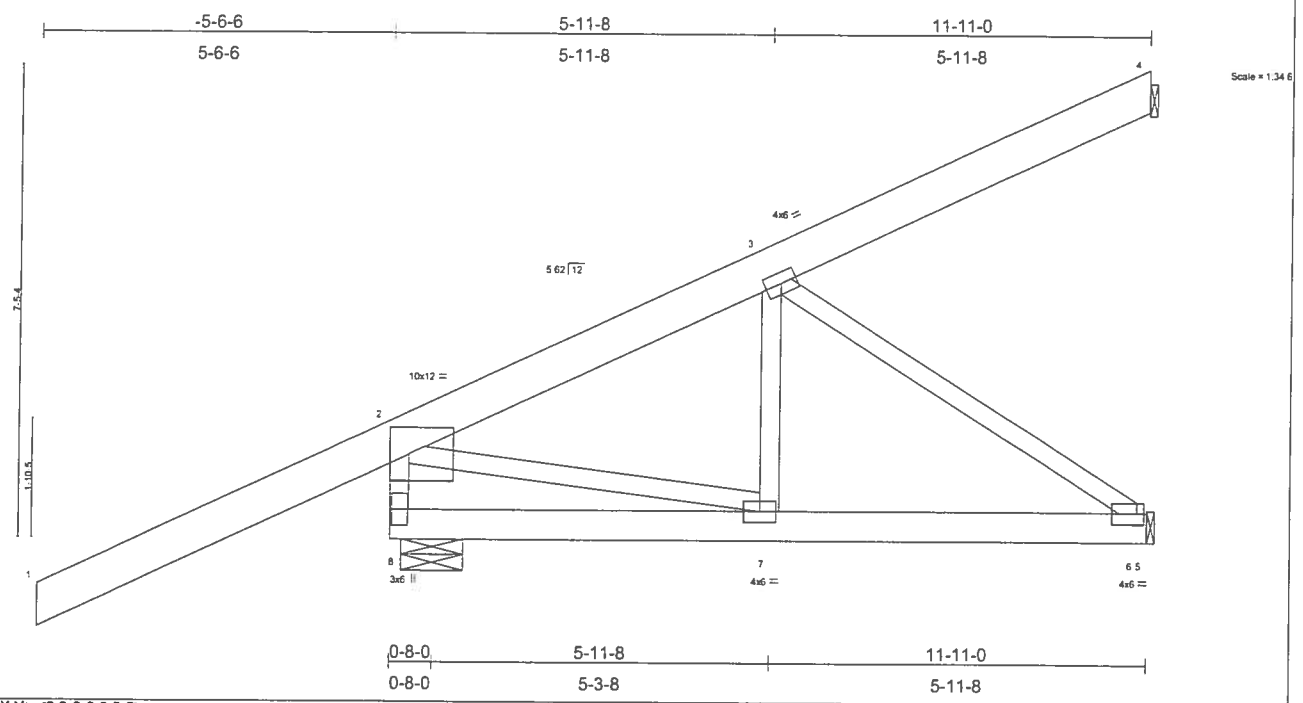

Plate Offsets (X,Y): [2:0-3-8,0-5-0]

LOADING (psf)		SPACING	2-0-0	CSI		DEFL	in	(loc)	l/defl	L/d	PLATES	GRIP
TCLL	20.0	Plates Increase	1.25	TC	0.67	Vert(LL)	-0.02	6-7	>999	240	MT20	244/190
TCDL	7.0	Lumber Increase	1.25	BC	0.13	Vert(TL)	-0.03	6-7	>999	180		
BCLL	10.0	Rep Stress Incr	NO	WB	0.30	Horz(TL)	-0.01	4	n/a	n/a		
BCDL	5.0	Code FBC2004/TPI2002		(Matrix)							Weight: 113 lb	

LUMBER
TOP CHORD 2 X 8 SYP No.1D
BOT CHORD 2 X 6 SYP No.1D
WEBS 2 X 4 SYP No.3 *Except*
W1 2 X 4 SYP No.2

BRACING
TOP CHORD Structural wood sheathing directly applied or 6-0-0 oc purlins, except end verticals.
BOT CHORD Rigid ceiling directly applied or 6-0-0 oc bracing.

REACTIONS (lb/size) 8=708/0-11-15, 4=256/Mechanical, 6=327/Mechanical
Max Horz 8=457(load case 4)
Max Uplift8=-388(load case 4), 4=-254(load case 4), 6=-54(load case 5)

FORCES (lb) - Maximum Compression/Maximum Tension
TOP CHORD 2-8=-704/411, 1-2=0/130, 2-3=-373/0, 3-4=-137/82
BOT CHORD 7-8=-194/15, 6-7=-116/277, 5-6=0/0
WEBS 2-7=-21/484, 3-7=0/104, 3-6=-339/142

NOTES
1) Wind: ASCE 7-02; 110mph (3-second gust); h=24ft; TCDL=4.2psf; BCDL=3.0psf; Category II; Exp B; enclosed; MWFRS gable end zone; end vertical left exposed; Lumber DOL=1.60 plate grip DOL=1.60.
2) Refer to girder(s) for truss to truss connections.
3) Provide mechanical connection (by others) of truss to bearing plate capable of withstanding 388 lb uplift at joint 8, 254 lb uplift at joint 4 and 54 lb uplift at joint 6.
4) In the LOAD CASE(S) section, loads applied to the face of the truss are noted as front (F) or back (B).

LOAD CASE(S) Standard
1) Regular: Lumber Increase=1.25, Plate Increase=1.25
Uniform Loads (plf)
Vert: 1-2=-54
Trapezoidal Loads (plf)
Vert: 2=-1(F=26, B=26)-to-4=-107(F=-26, B=-26), 8=0(F=15, B=15)-to-5=-59(F=-15, B=-15)

NOVEMBER 02, 2006 TRUSS DESIGN ENGINEER:
THOMAS E. MILLER PE 56877, BYRON K. ANDERSON PE 60987
STRUCTURAL ENGINEERING AND INSPECTIONS, INC. EB 9196
16105 N. FLORIDA AVE. STE B, LUTZ, FL 33549

Dwg.#1102061074

Job	Truss	Truss Type	Qty	Ply	LINTON RESIDENCE
L216061	HJ12	MONO TRUSS	1	1	Job Reference (optional)

Builders FirstSource, Lake City, Fl 32055 — 6.300 s Apr 19 2006 MiTek Industries, Inc. Thu Nov 02 07:15:24 2006 Page 1

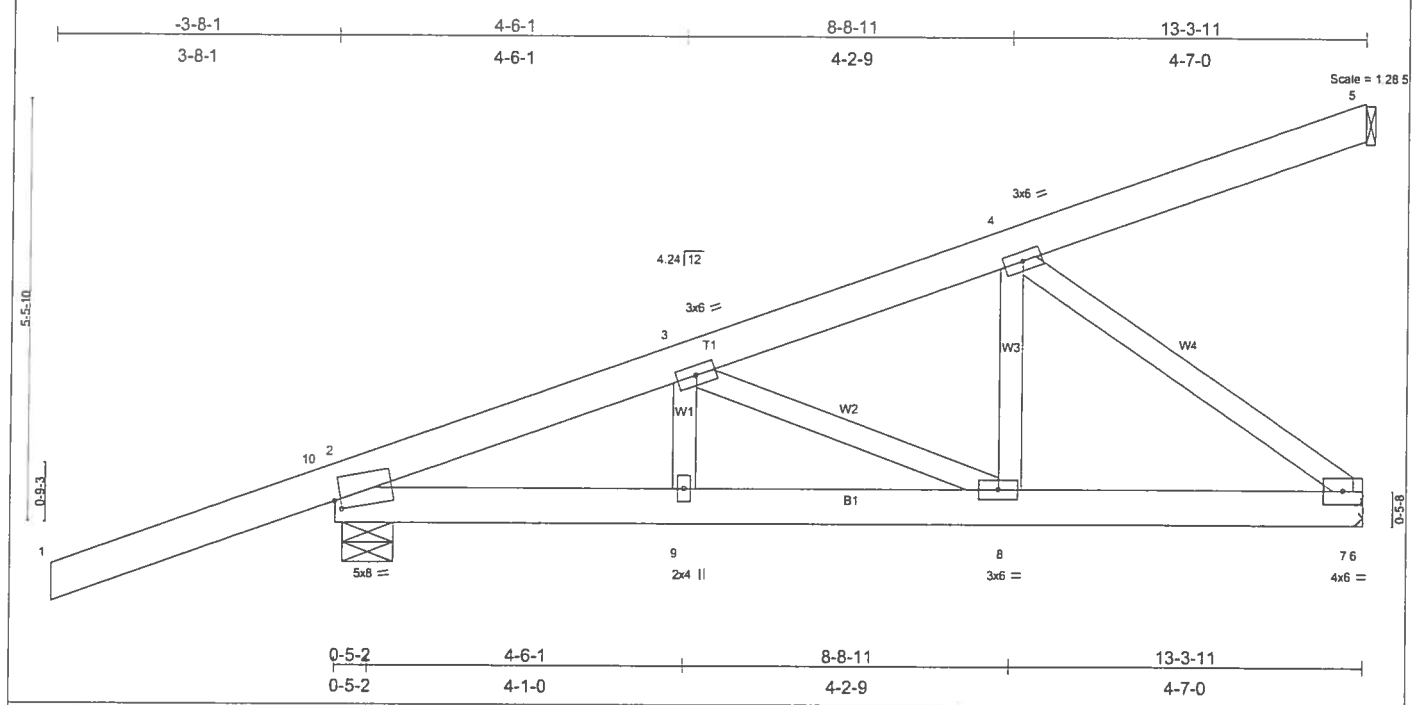

Plate Offsets (X,Y): [2:0-0-15,0-1-7]

LOADING (psf)		SPACING 2-0-0		CSI		DEFL	in	(loc)	l/defl	L/d	PLATES	GRIP
TCLL	20.0	Plates Increase	1.25	TC	0.36	Vert(LL)	-0.02	8-9	>999	240	MT20	244/190
TCDL	7.0	Lumber Increase	1.25	BC	0.45	Vert(TL)	-0.04	8-9	>999	180		
BCLL	10.0	Rep Stress Incr	NO	WB	0.59	Horz(TL)	0.01	7	n/a	n/a		
BCDL	5.0	Code FBC2004/TPI2002		(Matrix)							Weight: 94 lb	

LUMBER
TOP CHORD 2 X 6 SYP No.1D
BOT CHORD 2 X 6 SYP No.1D
WEBS 2 X 4 SYP No.3

BRACING
TOP CHORD Structural wood sheathing directly applied or 6-0-0 oc purlins.
BOT CHORD Rigid ceiling directly applied or 10-0-0 oc bracing.

REACTIONS (lb/size) 5=276/Mechanical, 2=804/0-7-13, 7=816/Mechanical
Max Horz 2=423(load case 2)
Max Uplift5=-257(load case 2), 2=-371(load case 2), 7=-292(load case 2)

FORCES (lb) - Maximum Compression/Maximum Tension
TOP CHORD 1-10=0/48, 2-10=0/48, 2-3=-1043/82, 3-4=-929/153, 4-5=-118/67
BOT CHORD 2-9=-373/912, 8-9=-373/912, 7-8=-428/856, 6-7=0/0
WEBS 3-9=0/110, 3-8=-98/0, 4-8=0/353, 4-7=-1073/536

JOINT STRESS INDEX
2 = 0.43, 3 = 0.06, 4 = 0.35, 7 = 0.29, 8 = 0.23 and 9 = 0.06

NOTES
1) Wind: ASCE 7-02; 110mph (3-second gust); h=24ft; TCDL=4.2psf; BCDL=3.0psf; Category II; Exp B; enclosed; MWFRS gable end zone; end vertical left exposed; Lumber DOL=1.60 plate grip DOL=1.60.
2) All bearings are assumed to be SYP No.2 crushing capacity of 565.00 psi
3) Refer to girder(s) for truss to truss connections.
4) Refer to girder(s) for truss to truss connections.
5) Provide mechanical connection (by others) of truss to bearing plate capable of withstanding 257 lb uplift at joint 5, 371 lb uplift at joint 2 and 292 lb uplift at joint 7.
6) In the LOAD CASE(S) section, loads applied to the face of the truss are noted as front (F) or back (B).

LOAD CASE(S) Standard
1) Regular: Lumber Increase=1.25, Plate Increase=1.25
Uniform Loads (plf)
Vert: 1-10=-54
Trapezoidal Loads (plf)
Vert: 10=0(F=27, B=27)-to-5=-164(F=-55, B=-55), 2=-2(F=14, B=14)-to-6=-91(F=-31, B=-31)

NOVEMBER 02, 2006 TRUSS DESIGN ENGINEER:
THOMAS E. MILLER PE 56877, BYRON K. ANDERSON PE 60987
STRUCTURAL ENGINEERING AND INSPECTIONS, INC. EB 9196
16105 N. FLORIDA AVE. STE B, LUTZ, FL 33549

Dwg.#1102061075

Job	Truss	Truss Type	Qty	Ply	LINTON RESIDENCE
L216061	HJ7	JACK	1	1	Job Reference (optional)

Builders FirstSource, Lake City, Fl 32055

6.300 s Apr 19 2006 MiTek Industries, Inc. Wed Nov 01 16:03:35 2006 Page 1

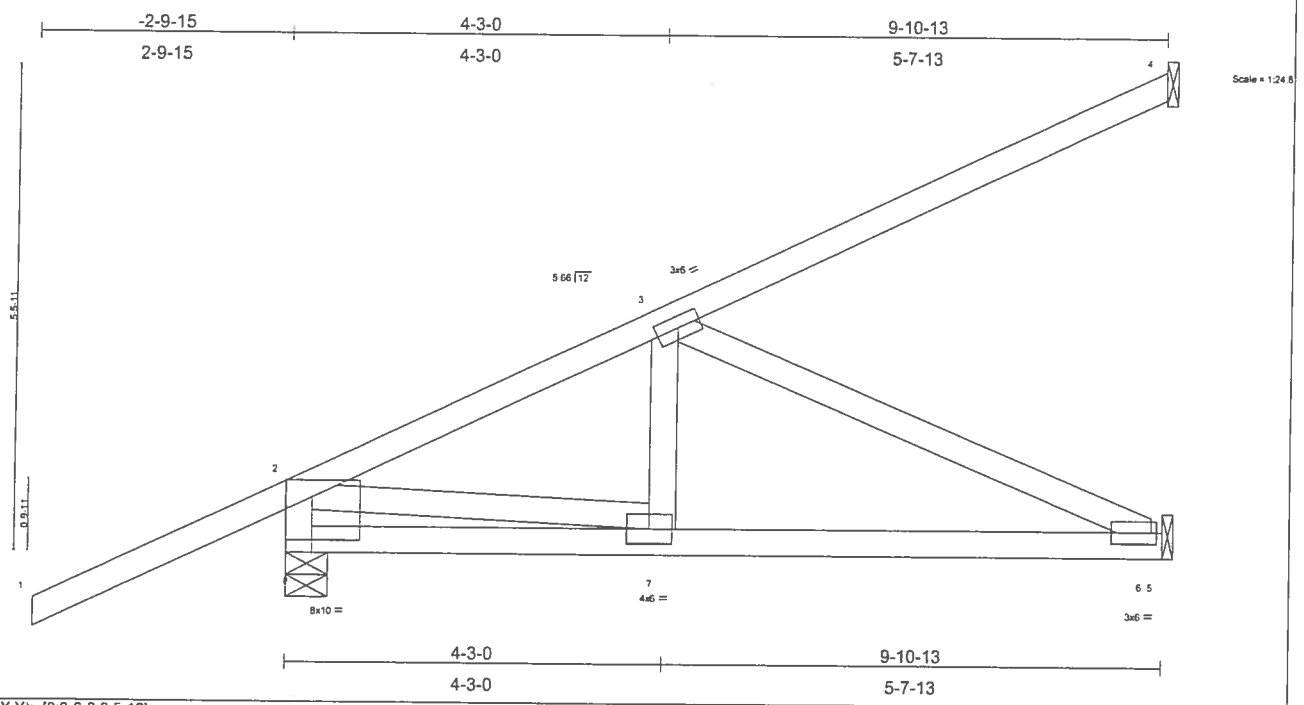

Plate Offsets (X,Y): [8:0-6-8,0-5-12]

LOADING (psf)		SPACING	2-0-0	CSI		DEFL	in	(loc)	l/defl	L/d	PLATES	GRIP
TCLL	20.0	Plates Increase	1.25	TC	0.95	Vert(LL)	-0.06	6-7	>999	240	MT20	244/190
TCDL	7.0	Lumber Increase	1.25	BC	0.41	Vert(TL)	-0.11	6-7	>999	180		
BCLL	10.0	Rep Stress Incr	NO	WB	0.39	Horz(TL)	-0.01	4	n/a	n/a		
BCDL	5.0	Code FBC2004/TPI2002		(Matrix)							Weight: 54 lb	

LUMBER
TOP CHORD 2 X 4 SYP No.2
BOT CHORD 2 X 4 SYP No.2
WEBS 2 X 4 SYP No.3

BRACING
TOP CHORD Structural wood sheathing directly applied or 6-0-0 oc purlins, except end verticals.
BOT CHORD Rigid ceiling directly applied or 6-0-0 oc bracing.

REACTIONS (lb/size) 8=524/0-5-11, 4=263/Mechanical, 6=396/Mechanical
Max Horz 8=380(load case 4)
Max Uplift8=-211(load case 4), 4=-264(load case 4), 6=-103(load case 4)

FORCES (lb) - Maximum Compression/Maximum Tension
TOP CHORD 2-8=-527/205, 1-2=0/68, 2-3=-582/12, 3-4=-148/81
BOT CHORD 7-8=-358/161, 6-7=-293/529, 5-6=0/0
WEBS 3-7=0/113, 3-6=-581/322, 2-7=-458/896

NOTES
1) Wind: ASCE 7-02; 110mph (3-second gust); h=24ft; TCDL=4.2psf; BCDL=3.0psf; Category II; Exp B; enclosed; MWFRS gable end zone; end vertical left exposed; Lumber DOL=1.60 plate grip DOL=1.60.
2) Refer to girder(s) for truss to truss connections.
3) Bearing at joint(s) 8 considers parallel to grain value using ANSI/TPI 1 angle to grain formula. Building designer should verify capacity of bearing surface.
4) Provide mechanical connection (by others) of truss to bearing plate capable of withstanding 211 lb uplift at joint 8, 264 lb uplift at joint 4 and 103 lb uplift at joint 6.
5) In the LOAD CASE(S) section, loads applied to the face of the truss are noted as front (F) or back (B).

LOAD CASE(S) Standard
1) Regular: Lumber Increase=1.25, Plate Increase=1.25
Uniform Loads (plf)
Vert: 1-2=-54
Trapezoidal Loads (plf)
Vert: 2=-2(F=26, B=26)-to-4=-134(F=-40, B=-40), 8=0(F=15, B=15)-to-5=-74(F=-22, B=-22)

NOVEMBER 02, 2006 TRUSS DESIGN ENGINEER:
THOMAS E. MILLER PE 56877, BYRON K. ANDERSON PE 60987
STRUCTURAL ENGINEERING AND INSPECTIONS, INC. EB 9196
16105 N. FLORIDA AVE. STE B, LUTZ, FL 33549

Dwg.#1102061076

Job	Truss	Truss Type	Qty	Ply	LINTON RESIDENCE
L216061	HJ7A	JACK	2	1	Job Reference (optional)

Builders FirstSource, Lake City, Fl 32055

6.300 s Apr 19 2006 MiTek Industries, Inc. Wed Nov 01 16:04:55 2006 Page 1

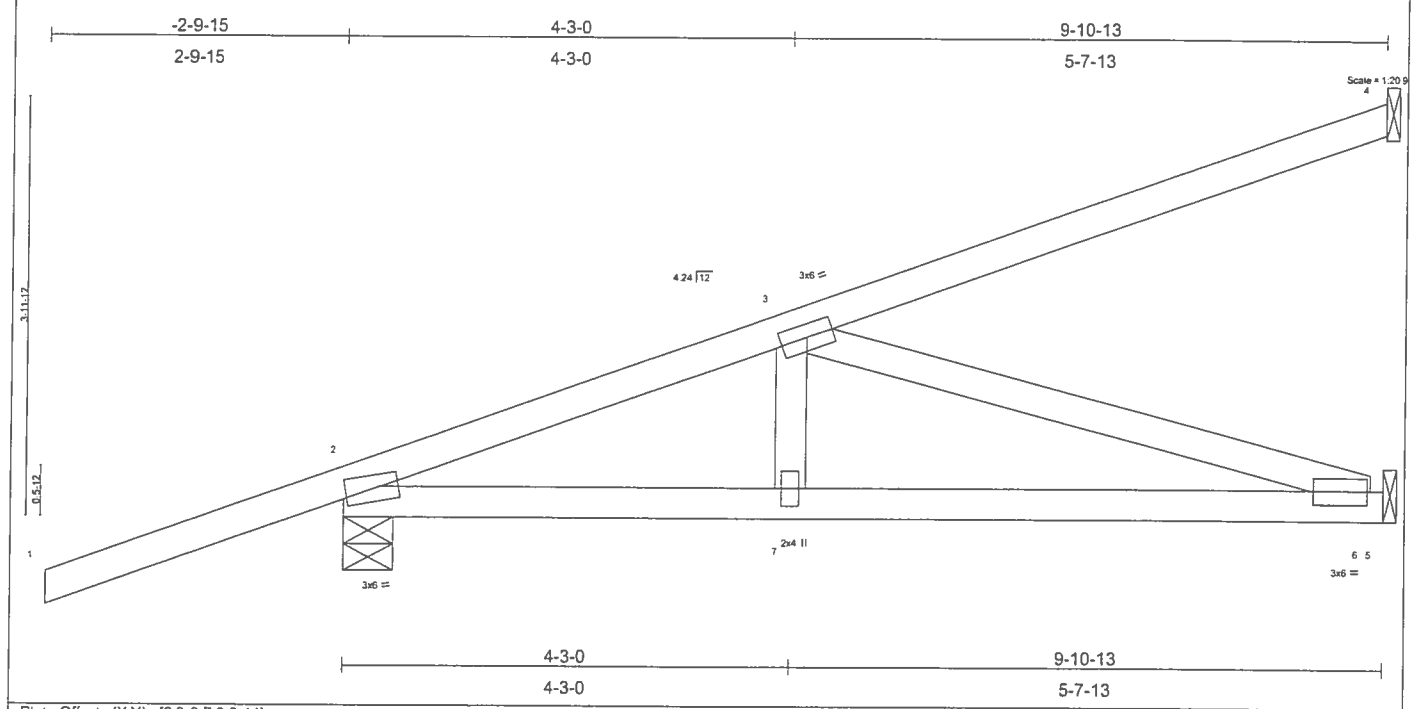

Plate Offsets (X,Y): [2:0-0-7,0-0-14]

LOADING (psf)		SPACING	2-0-0	CSI		DEFL	in	(loc)	l/defl	L/d	PLATES	GRIP
TCLL	20.0	Plates Increase	1.25	TC	0.61	Vert(LL)	-0.08	6-7	>999	240	MT20	244/190
TCDL	7.0	Lumber Increase	1.25	BC	0.48	Vert(TL)	-0.13	6-7	>859	180		
BCLL	10.0	Rep Stress Incr	NO	WB	0.47	Horz(TL)	0.01	6	n/a	n/a		
BCDL	5.0	Code FBC2004/TPI2002		(Matrix)							Weight: 45 lb	

LUMBER
TOP CHORD 2 X 4 SYP No.2
BOT CHORD 2 X 4 SYP No.2
WEBS 2 X 4 SYP No.3

BRACING
TOP CHORD Structural wood sheathing directly applied or 6-0-0 oc purlins.
BOT CHORD Rigid ceiling directly applied or 10-0-0 oc bracing.

REACTIONS (lb/size) 4=268/Mechanical, 2=532/0-5-11, 6=385/Mechanical
Max Horz 2=266(load case 2)
Max Uplift4=-244(load case 2), 2=-271(load case 2), 6=-70(load case 2)

FORCES (lb) - Maximum Compression/Maximum Tension
TOP CHORD 1-2=0/43, 2-3=-800/104, 3-4=-109/65
BOT CHORD 2-7=-302/731, 6-7=-302/731, 5-6=0/0
WEBS 3-7=0/159, 3-6=-764/315

NOTES
1) Wind: ASCE 7-02; 110mph (3-second gust); h=24ft; TCDL=4.2psf; BCDL=3.0psf; Category II; Exp B; enclosed; MWFRS gable end zone; end vertical left exposed; Lumber DOL=1.60 plate grip DOL=1.60.
2) Refer to girder(s) for truss to truss connections.
3) Provide mechanical connection (by others) of truss to bearing plate capable of withstanding 244 lb uplift at joint 4, 271 lb uplift at joint 2 and 70 lb uplift at joint 6.
4) In the LOAD CASE(S) section, loads applied to the face of the truss are noted as front (F) or back (B).

LOAD CASE(S) Standard
1) Regular: Lumber Increase=1.25, Plate Increase=1.25
Uniform Loads (plf)
Vert: 1-2=-54
Trapezoidal Loads (plf)
Vert: 2=-3(F=25, B=25)-to-4=-134(F=-40, B=-40), 2=0(F=15, B=15)-to-5=-74(F=-22, B=-22)

NOVEMBER 02, 2006 TRUSS DESIGN ENGINEER:
THOMAS E. MILLER PE 56877, BYRON K. ANDERSON PE 60987
STRUCTURAL ENGINEERING AND INSPECTIONS, INC. EB 9196
16105 N. FLORIDA AVE. STE B, LUTZ, FL 33549

Dwg.#1102061077

Job	Truss	Truss Type	Qty	Ply	LINTON RESIDENCE
L216061	HJ8	MONO TRUSS	1	1	Job Reference (optional)

Builders FirstSource, Lake City, Fl 32055

6.300 s Apr 19 2006 MiTek Industries, Inc. Wed Nov 01 16:08:16 2006 Page 1

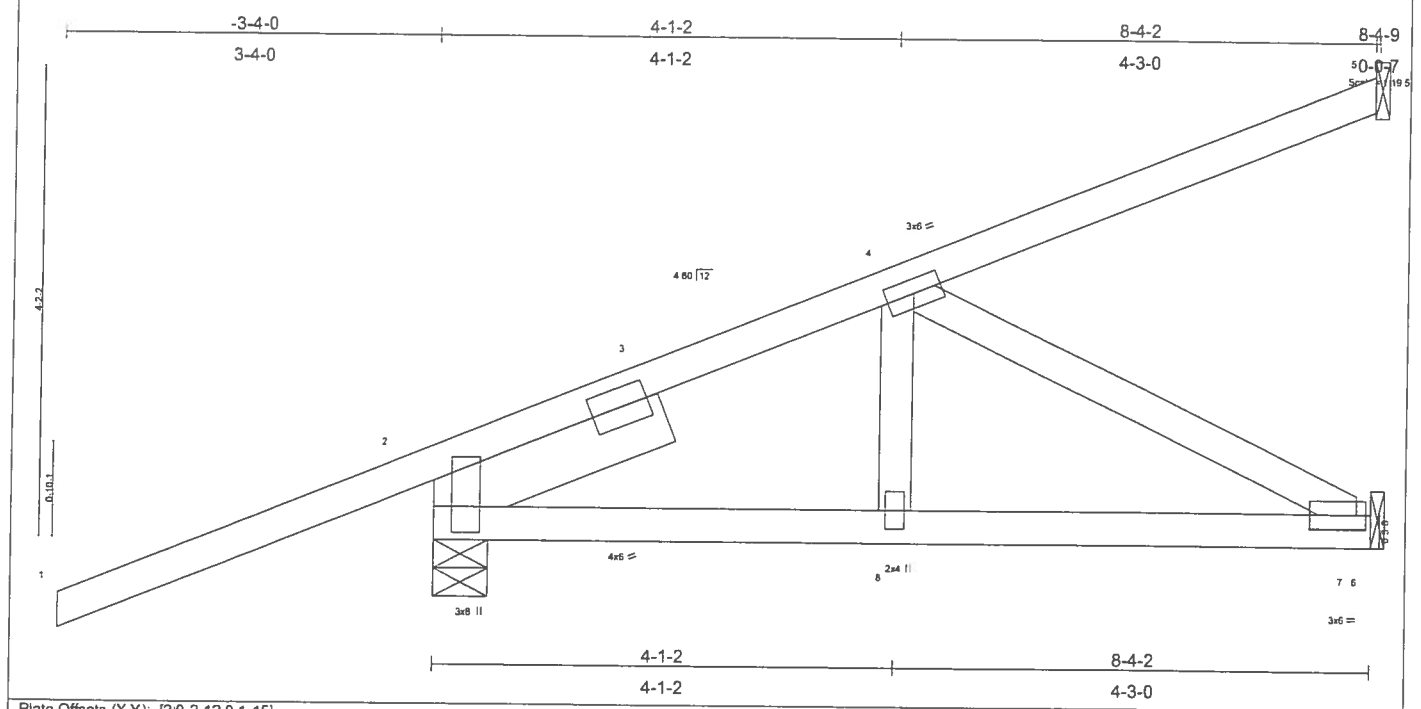

Plate Offsets (X,Y): [2:0-2-12,0-1-15]

LOADING (psf)		SPACING	2-0-0	CSI		DEFL	in	(loc)	l/defl	L/d	PLATES	GRIP
TCLL	20.0	Plates Increase	1.25	TC	0.63	Vert(LL)	-0.03	7-8	>999	240	MT20	244/190
TCDL	7.0	Lumber Increase	1.25	BC	0.25	Vert(TL)	-0.04	7-8	>999	180		
BCLL	10.0	Rep Stress Incr	NO	WB	0.14	Horz(TL)	-0.01	5	n/a	n/a		
BCDL	5.0	Code FBC2004/TPI2002		(Matrix)							Weight: 46 lb	

LUMBER
TOP CHORD 2 X 4 SYP No.2
BOT CHORD 2 X 4 SYP No.2
WEBS 2 X 4 SYP No.3
SLIDER Left 2 X 6 SYP No.1D 2-2-9

BRACING
TOP CHORD Structural wood sheathing directly applied or 6-0-0 oc purlins.
BOT CHORD Rigid ceiling directly applied or 10-0-0 oc bracing.

REACTIONS (lb/size) 5=184/Mechanical, 2=456/0-5-13, 7=272/Mechanical
Max Horz 2=215(load case 4)
Max Uplift5=-168(load case 4), 2=-250(load case 4), 7=-47(load case 4)

FORCES (lb) - Maximum Compression/Maximum Tension
TOP CHORD 1-2=0/42, 2-3=-389/0, 3-4=-365/0, 4-5=-83/51
BOT CHORD 2-8=-116/307, 7-8=-116/307, 6-7=0/0
WEBS 4-8=0/118, 4-7=-348/131

NOTES
1) Wind: ASCE 7-02; 110mph (3-second gust); h=24ft; TCDL=4.2psf; BCDL=3.0psf; Category II; Exp B; enclosed; MWFRS gable end zone; end vertical left exposed; Lumber DOL=1.60 plate grip DOL=1.60.
2) Refer to girder(s) for truss to truss connections.
3) Provide mechanical connection (by others) of truss to bearing plate capable of withstanding 168 lb uplift at joint 5, 250 lb uplift at joint 2 and 47 lb uplift at joint 7.
4) In the LOAD CASE(S) section, loads applied to the face of the truss are noted as front (F) or back (B).

LOAD CASE(S) Standard
1) Regular: Lumber Increase=1.25, Plate Increase=1.25
Uniform Loads (plf)
Vert: 1-2=-54
Trapezoidal Loads (plf)
Vert: 2=0(F=27, B=27)-to-5=-113(F=-30, B=-30), 2=0(F=15, B=15)-to-6=-63(F=-16, B=-16)

NOVEMBER 02, 2006 TRUSS DESIGN ENGINEER:
THOMAS E. MILLER PE 56877, BYRON K. ANDERSON PE 60987
STRUCTURAL ENGINEERING AND INSPECTIONS, INC. EB 9196
16105 N. FLORIDA AVE. STE B, LUTZ, FL 33549

Dwg.#1102061078

Job	Truss	Truss Type	Qty	Ply	LINTON RESIDENCE
L216061	T01	MONO HIP	1	2	Job Reference (optional)

Builders FirstSource, Lake City, Fl 32055 — 6.300 s Apr 19 2006 MiTek Industries, Inc. Wed Nov 01 16:34:19 2006 Page 1

-2-0-0	6-8-11	12-4-13	18-3-2	24-1-8	29-7-3	35-10-3	42-0-0
2-0-0	6-8-11	5-8-2	5-10-5	5-10-5	5-5-11	6-3-0	6-1-13

Scale = 1:74.4

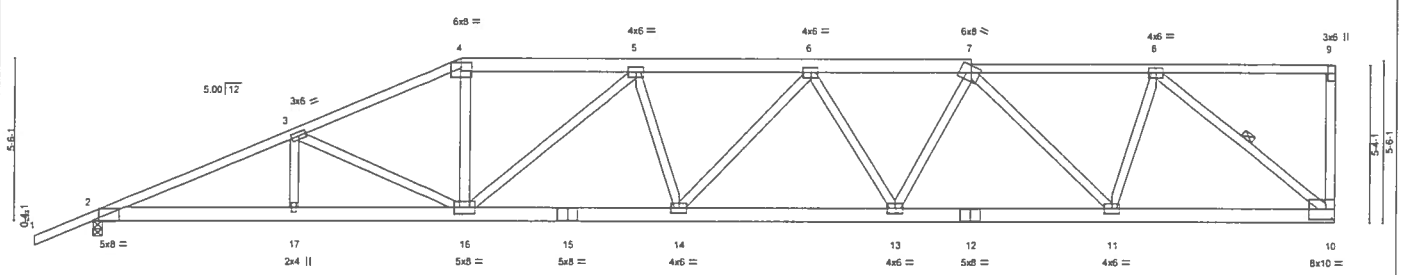

6-8-11	12-4-13	19-8-12	27-0-10	34-4-9	42-0-0
6-8-11	5-8-2	7-3-15	7-3-15	7-3-15	7-7-7

Plate Offsets (X,Y): [2:0-4-0,Edge], [4:0-4-0,0-2-2], [7:0-3-7,0-2-14]

LOADING (psf)		SPACING 2-0-0		CSI		DEFL	in	(loc)	l/defl	L/d	PLATES	GRIP
TCLL	20.0	Plates Increase	1.25	TC	0.45	Vert(LL)	-0.31	14-16	>999	240	MT20	244/190
TCDL	7.0	Lumber Increase	1.25	BC	0.49	Vert(TL)	-0.50	14-16	>999	180		
BCLL	10.0	Rep Stress Incr	NO	WB	0.66	Horz(TL)	0.14	10	n/a	n/a		
BCDL	5.0	Code FBC2004/TPI2002		(Matrix)							Weight: 555 lb	

LUMBER
TOP CHORD 2 X 4 SYP No.2 *Except*
T2 2 X 6 SYP No.1D
BOT CHORD 2 X 6 SYP No.1D
WEBS 2 X 4 SYP No.3

BRACING
TOP CHORD Structural wood sheathing directly applied or 4-5-7 oc purlins, except end verticals.
BOT CHORD Rigid ceiling directly applied or 9-7-8 oc bracing.
WEBS 1 Row at midpt 8-10

REACTIONS (lb/size) 10=3915/Mechanical, 2=3566/0-3-8
Max Horz 2=280(load case 4)
Max Uplift10=-1724(load case 2), 2=-1474(load case 4)

FORCES (lb) - Maximum Compression/Maximum Tension
TOP CHORD 1-2=0/44, 2-3=-8205/3314, 3-4=-7748/3310, 4-5=-7193/3122, 5-6=-8316/3609, 6-7=-7601/3297, 7-8=-4906/2110, 8-9=-91/47, 9-10=-330/255
BOT CHORD 2-17=-3153/7502, 16-17=-3153/7502, 15-16=-3640/8260, 14-15=-3640/8260, 13-14=-3574/8065, 12-13=-3084/6934, 11-12=-3084/6934, 10-11=-1850/4141
WEBS 3-17=0/94, 3-16=-423/208, 4-16=-941/2464, 5-16=-1426/715, 5-14=0/199, 6-14=-99/382, 6-13=-937/564, 7-13=-455/1447, 7-11=-2922/1404, 8-11=-916/2703, 8-10=-5253/2339

NOTES
1) 2-ply truss to be connected together with 10d (0.131"x3") nails as follows:
Top chords connected as follows: 2 X 4 - 1 row at 0-9-0 oc, 2 X 6 - 2 rows at 0-9-0 oc.
Bottom chords connected as follows: 2 X 6 - 2 rows at 0-9-0 oc.
Webs connected as follows: 2 X 4 - 1 row at 0-9-0 oc.
2) All loads are considered equally applied to all plies, except if noted as front (F) or back (B) face in the LOAD CASE(S) section. Ply to ply connections have been provided to distribute only loads noted as (F) or (B), unless otherwise indicated.
3) Wind: ASCE 7-02; 110mph (3-second gust); h=24ft; TCDL=4.2psf; BCDL=3.0psf; Category II; Exp B; enclosed; MWFRS gable end zone; Lumber DOL=1.60 plate grip DOL=1.60.
4) Provide adequate drainage to prevent water ponding.
5) Refer to girder(s) for truss to truss connections.
6) Provide mechanical connection (by others) of truss to bearing plate capable of withstanding 1724 lb uplift at joint 10 and 1474 lb uplift at joint 2.
7) Girder carries hip end with 0-0-0 right side setback, 12-4-13 left side setback, and 7-0-0 end setback.
8) Hanger(s) or other connection device(s) shall be provided sufficient to support concentrated load(s) 955 lb down and 475 lb up at 12-4-13 on bottom chord. The design/selection of such connection device(s) is the responsibility of others.

LOAD CASE(S) Standard
1) Regular: Lumber Increase=1.25, Plate Increase=1.25
Uniform Loads (plf)
Vert: 1-4=-54, 4-9=-118(F=-64), 2-16=-30, 10-16=-65(F=-35)
Concentrated Loads (lb)
Vert: 16=-955(F)

NOVEMBER 02, 2006 TRUSS DESIGN ENGINEER:
THOMAS E. MILLER PE 56877, BYRON K. ANDERSON PE 60987
STRUCTURAL ENGINEERING AND INSPECTIONS, INC. EB 9196
16105 N. FLORIDA AVE. STE B, LUTZ, FL 33549

Dwg.#1102061079

Job	Truss	Truss Type	Qty	Ply	LINTON RESIDENCE
L216061	T02	HIP	1	1	Job Reference (optional)

Builders FirstSource, Lake City, Fl 32055

6.300 s Apr 19 2006 MiTek Industries, Inc. Wed Nov 01 16:16:34 2006 Page 1

-2-0-0	8-1-8	15-7-3	21-0-0	26-4-13	33-10-8	42-0-0
2-0-0	8-1-8	7-5-11	5-4-13	5-4-13	7-5-11	8-1-8

Scale = 1:74.2

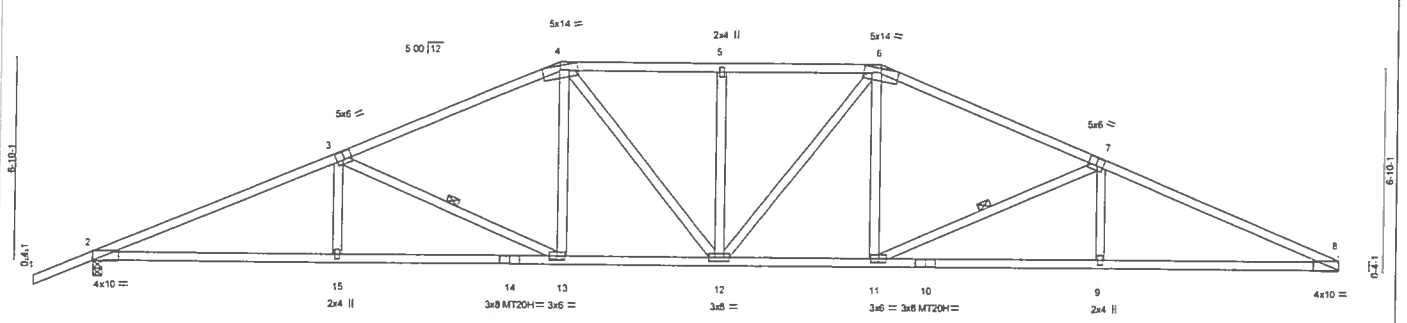

8-1-8	15-7-3	21-0-0	26-4-13	33-10-8	42-0-0
8-1-8	7-5-11	5-4-13	5-4-13	7-5-11	8-1-8

Plate Offsets (X,Y): [2:0-0-0,0-0-4], [3:0-3-0,0-3-4], [7:0-3-0,0-3-4], [8:0-0-0,0-0-4]

LOADING (psf)		SPACING 2-0-0		CSI		DEFL	in	(loc)	l/defl	L/d	PLATES	GRIP
TCLL	20.0	Plates Increase	1.25	TC	0.87	Vert(LL)	-0.37	13-15	>999	240	MT20	244/190
TCDL	7.0	Lumber Increase	1.25	BC	0.97	Vert(TL)	-0.60	13-15	>838	180	MT20H	187/143
BCLL	10.0	Rep Stress Incr	YES	WB	0.32	Horz(TL)	0.22	8	n/a	n/a		
BCDL	5.0	Code FBC2004/TPI2002		(Matrix)							Weight: 217 lb	

LUMBER
TOP CHORD 2 X 4 SYP No.2
BOT CHORD 2 X 4 SYP No.2
WEBS 2 X 4 SYP No.3

BRACING
TOP CHORD Structural wood sheathing directly applied.
BOT CHORD Rigid ceiling directly applied or 2-2-0 oc bracing.
WEBS 1 Row at midpt 3-13, 7-11

REACTIONS (lb/size) 2=1874/0-3-8, 8=1752/Mechanical
Max Horz 2=143(load case 5)
Max Uplift2=-663(load case 5), 8=-539(load case 6)

FORCES (lb) - Maximum Compression/Maximum Tension
TOP CHORD 1-2=0/40, 2-3=-3795/1087, 3-4=-2942/868, 4-5=-2813/908, 5-6=-2813/908, 6-7=-2952/878, 7-8=-3852/1140
BOT CHORD 2-15=-1001/3418, 14-15=-1001/3418, 13-14=-1001/3418, 12-13=-642/2651, 11-12=-633/2660, 10-11=-964/3478, 9-10=-964/3478, 8-9=-964/3478
WEBS 3-15=0/264, 3-13=-861/398, 4-13=-123/549, 4-12=-119/431, 5-12=-277/187, 6-12=-112/419, 6-11=-137/567, 7-11=-917/445, 7-9=0/280

NOTES
1) Unbalanced roof live loads have been considered for this design.
2) Wind: ASCE 7-02; 110mph (3-second gust); h=24ft; TCDL=4.2psf; BCDL=3.0psf; Category II; Exp B; enclosed; MWFRS gable end zone and C-C Interior(1) zone; Lumber DOL=1.60 plate grip DOL=1.60. This truss is designed for C-C for members and forces, and for MWFRS for reactions specified.
3) Provide adequate drainage to prevent water ponding.
4) All plates are MT20 plates unless otherwise indicated.
5) Refer to girder(s) for truss to truss connections.
6) Provide mechanical connection (by others) of truss to bearing plate capable of withstanding 663 lb uplift at joint 2 and 539 lb uplift at joint 8.

LOAD CASE(S) Standard

NOVEMBER 02, 2006 TRUSS DESIGN ENGINEER:
THOMAS E. MILLER PE 56877, BYRON K. ANDERSON PE 60987
STRUCTURAL ENGINEERING AND INSPECTIONS, INC. EB 9196
16105 N. FLORIDA AVE. STE B, LUTZ, FL 33549

Dwg.#1102061080

Job	Truss	Truss Type	Qty	Ply	LINTON RESIDENCE
L216061	T03	HIP	1	1	Job Reference (optional)

Builders FirstSource, Lake City, Fl 32055 — 6.300 s Apr 19 2006 MiTek Industries, Inc. Wed Nov 01 16:17:15 2006 Page 1

-2-0-0	6-8-6	12-9-0	18-9-10	23-2-6	29-3-0	35-3-10	42-0-0
2-0-0	6-8-6	6-0-10	6-0-10	4-4-13	6-0-10	6-0-10	6-8-6

Scale = 1:74.2

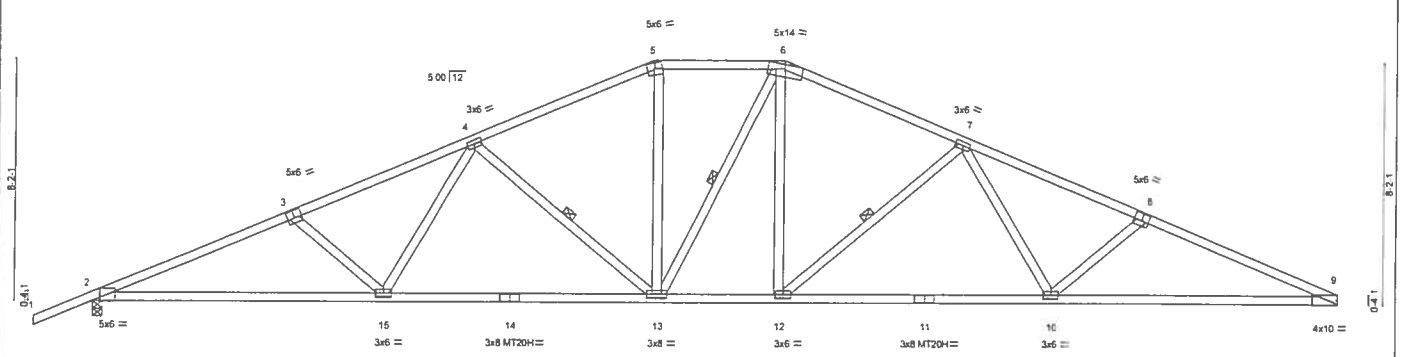

9-8-11	18-9-10	23-2-6	32-3-5	42-0-0
9-8-11	9-0-14	4-4-13	9-0-14	9-8-11

Plate Offsets (X,Y): [2:0-2-14,0-0-2], [3:0-3-0,0-3-0], [8:0-3-0,0-3-0], [9:0-0-0,0-0-4]

LOADING (psf)		SPACING 2-0-0		CSI		DEFL	in	(loc)	l/defl	L/d	PLATES	GRIP
TCLL	20.0	Plates Increase	1.25	TC	0.75	Vert(LL)	-0.44	10-12	>999	240	MT20	244/190
TCDL	7.0	Lumber Increase	1.25	BC	0.95	Vert(TL)	-0.72	10-12	>698	180	MT20H	187/143
BCLL	10.0	Rep Stress Incr	YES	WB	0.26	Horz(TL)	0.21	9	n/a	n/a		
BCDL	5.0	Code FBC2004/TPI2002		(Matrix)							Weight: 221 lb	

LUMBER
TOP CHORD 2 X 4 SYP No.2
BOT CHORD 2 X 4 SYP No.2
WEBS 2 X 4 SYP No.3

BRACING
TOP CHORD Structural wood sheathing directly applied or 2-2-12 oc purlins.
BOT CHORD Rigid ceiling directly applied or 2-2-0 oc bracing.
WEBS 1 Row at midpt 4-13, 6-13, 7-12

REACTIONS (lb/size) 2=1874/0-3-8, 9=1752/Mechanical
Max Horz 2=162(load case 5)
Max Uplift2=-687(load case 5), 9=-562(load case 6)

FORCES (lb) - Maximum Compression/Maximum Tension
TOP CHORD 1-2=0/40, 2-3=-3780/1179, 3-4=-3520/1087, 4-5=-2574/825, 5-6=-2329/810, 6-7=-2575/833, 7-8=-3568/1132, 8-9=-3846/1237
BOT CHORD 2-15=-1116/3429, 14-15=-852/2890, 13-14=-852/2890, 12-13=-517/2330, 11-12=-763/2911, 10-11=-763/2911, 9-10=-1066/3500
WEBS 3-15=-332/267, 4-15=-134/615, 4-13=-759/393, 5-13=-197/688, 6-13=-211/209, 6-12=-228/693, 7-12=-784/411, 7-10=-170/657, 8-10=-369/297

NOTES
1) Unbalanced roof live loads have been considered for this design.
2) Wind: ASCE 7-02; 110mph (3-second gust); h=24ft; TCDL=4.2psf; BCDL=3.0psf; Category II; Exp B; enclosed; MWFRS gable end zone and C-C Interior(1) zone; Lumber DOL=1.60 plate grip DOL=1.60. This truss is designed for C-C for members and forces, and for MWFRS for reactions specified.
3) Provide adequate drainage to prevent water ponding.
4) All plates are MT20 plates unless otherwise indicated.
5) Refer to girder(s) for truss to truss connections.
6) Provide mechanical connection (by others) of truss to bearing plate capable of withstanding 687 lb uplift at joint 2 and 562 lb uplift at joint 9.

LOAD CASE(S) Standard

NOVEMBER 02, 2006 TRUSS DESIGN ENGINEER:
THOMAS E. MILLER PE 56877, BYRON K. ANDERSON PE 60987
STRUCTURAL ENGINEERING AND INSPECTIONS, INC. EB 9196
16105 N. FLORIDA AVE. STE B, LUTZ, FL 33549

Dwg.#1102061081

Job	Truss	Truss Type	Qty	Ply	LINTON RESIDENCE
L216061	T04	COMMON	2	1	Job Reference (optional)

Builders FirstSource, Lake City, Fl 32055 — 6.300 s Apr 19 2006 MiTek Industries, Inc. Wed Nov 01 16:18:10 2006 Page 1

-2-0-0	7-5-3	14-2-10	21-0-0	27-9-6	34-6-13	42-0-0
2-0-0	7-5-3	6-9-6	6-9-6	6-9-6	6-9-6	7-5-3

Scale = 1:73.0

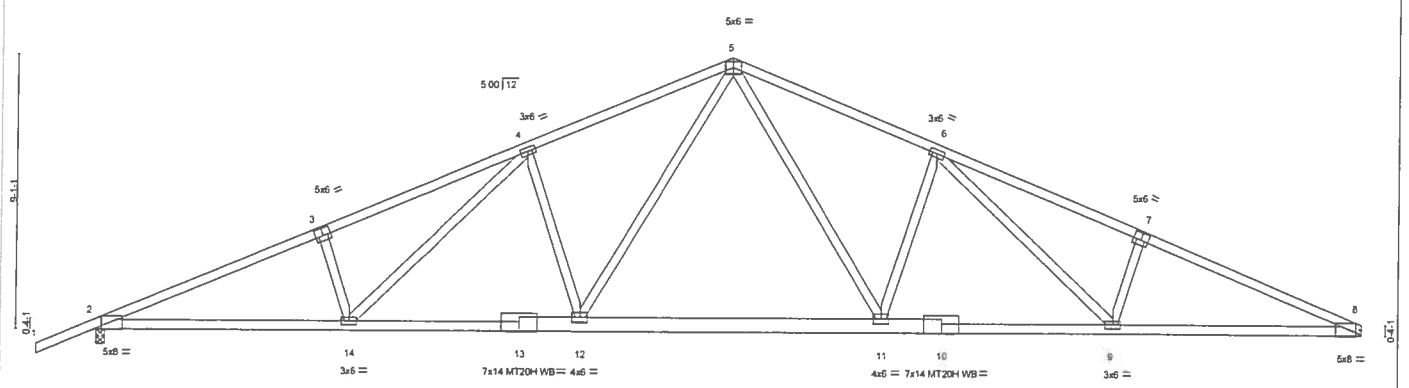

8-3-14	16-0-0	26-0-0	33-8-2	42-0-0
8-3-14	7-8-2	10-0-0	7-8-2	8-3-14

Plate Offsets (X,Y): [2:0-2-5,Edge], [3:0-3-0,0-3-0], [7:0-3-0,0-3-0], [8:0-2-5,Edge]

LOADING (psf)		SPACING 2-0-0		CSI		DEFL	in	(loc)	l/defl	L/d	PLATES	GRIP
TCLL	20.0	Plates Increase	1.25	TC	0.82	Vert(LL)	-0.61	11-12	>822	240	MT20	244/190
TCDL	7.0	Lumber Increase	1.25	BC	0.84	Vert(TL)	-0.98	11-12	>511	180	MT20H	187/143
BCLL	10.0	Rep Stress Incr	YES	WB	0.92	Horz(TL)	0.20	8	n/a	n/a		
BCDL	5.0	Code FBC2004/TPI2002		(Matrix)							Weight: 225 lb	

LUMBER
TOP CHORD 2 X 4 SYP No.2
BOT CHORD 2 X 4 SYP No.1D *Except*
B2 2 X 6 SYP No.1D
WEBS 2 X 4 SYP No.3

BRACING
TOP CHORD Structural wood sheathing directly applied or 2-2-0 oc purlins.
BOT CHORD Rigid ceiling directly applied or 5-8-14 oc bracing.

REACTIONS (lb/size) 2=2121/0-3-8, 8=1999/Mechanical
Max Horz 2=175(load case 5)
Max Uplift2=-794(load case 5), 8=-669(load case 6)

FORCES (lb) - Maximum Compression/Maximum Tension
TOP CHORD 1-2=0/40, 2-3=-4394/1421, 3-4=-4274/1472, 4-5=-3568/1278, 5-6=-3570/1287, 6-7=-4308/1521, 7-8=-4411/1468
BOT CHORD 2-14=-1345/3974, 13-14=-1068/3402, 12-13=-1067/3407, 11-12=-696/2567, 10-11=-956/3412, 9-10=-957/3408, 8-9=-1270/4008
WEBS 3-14=-332/282, 4-14=-278/689, 4-12=-614/400, 5-12=-514/1346, 5-11=-520/1352, 6-11=-624/413, 6-9=-322/725, 7-9=-344/296

NOTES
1) Unbalanced roof live loads have been considered for this design.
2) Wind: ASCE 7-02; 110mph (3-second gust); h=24ft; TCDL=4.2psf; BCDL=3.0psf; Category II; Exp B; enclosed; MWFRS gable end zone and C-C Interior(1) zone; Lumber DOL=1.60 plate grip DOL=1.60. This truss is designed for C-C for members and forces, and for MWFRS for reactions specified.
3) All plates are MT20 plates unless otherwise indicated.
4) Refer to girder(s) for truss to truss connections.
5) Provide mechanical connection (by others) of truss to bearing plate capable of withstanding 794 lb uplift at joint 2 and 669 lb uplift at joint 8.
6) In the LOAD CASE(S) section, loads applied to the face of the truss are noted as front (F) or back (B).

LOAD CASE(S) Standard
1) Regular: Lumber Increase=1.25, Plate Increase=1.25
Uniform Loads (plf)
Vert: 1-5=-54, 5-8=-54, 2-12=-30, 11-12=-80(F=-50), 8-11=-30

NOVEMBER 02, 2006 TRUSS DESIGN ENGINEER:
THOMAS E. MILLER PE 56877, BYRON K. ANDERSON PE 60987
STRUCTURAL ENGINEERING AND INSPECTIONS, INC. EB 9196
16105 N. FLORIDA AVE. STE B, LUTZ, FL 33549

Dwg.#1102061082

Job	Truss	Truss Type	Qty	Ply	LINTON RESIDENCE
L216061	T05	MONO TRUSS	2	1	Job Reference (optional)

Builders FirstSource, Lake City, Fl 32055 — 6.300 s Apr 19 2006 MiTek Industries, Inc. Wed Nov 01 16:18:44 2006 Page 1

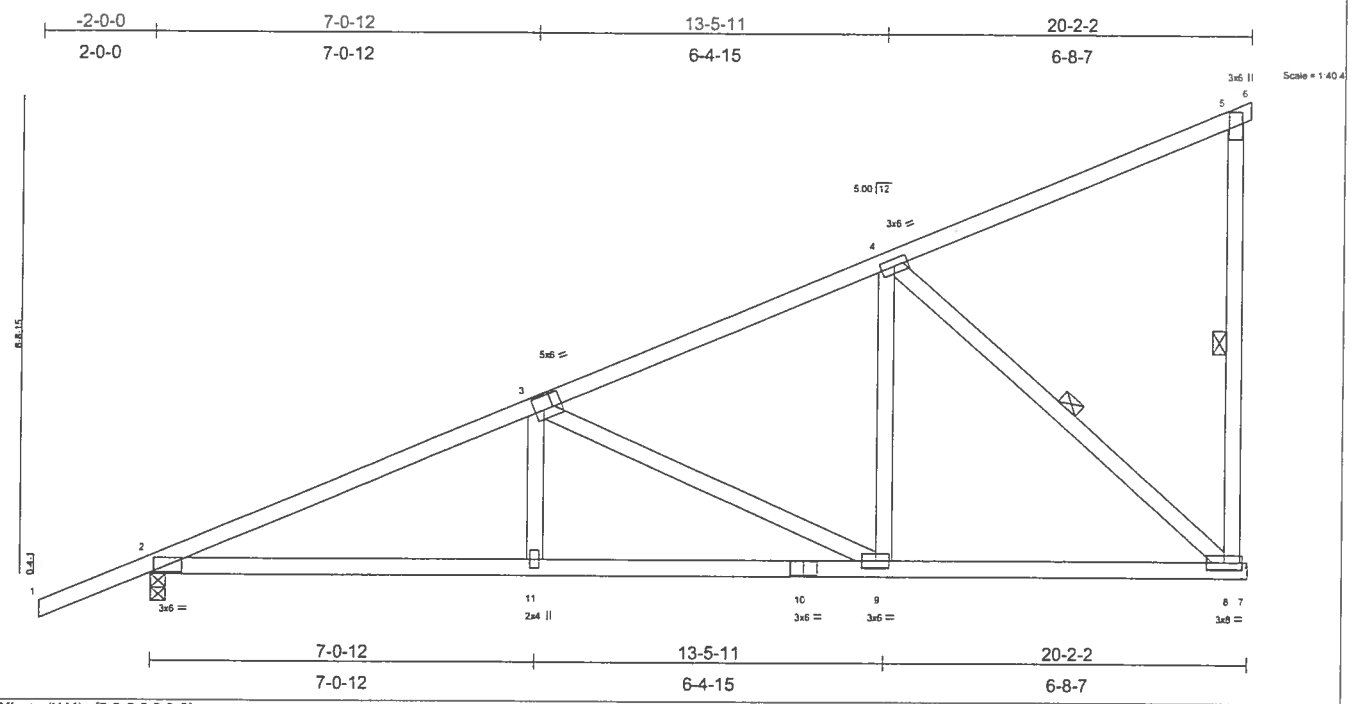

Plate Offsets (X,Y): [3:0-2-0,0-3-0]

LOADING (psf)		SPACING 2-0-0		CSI		DEFL in (loc) l/defl L/d		PLATES	GRIP
TCLL	20.0	Plates Increase	1.25	TC	0.37	Vert(LL) -0.10 2-11 >999 240		MT20	244/190
TCDL	7.0	Lumber Increase	1.25	BC	0.39	Vert(TL) -0.17 2-11 >999 180			
BCLL	10.0	Rep Stress Incr	YES	WB	0.63	Horz(TL) 0.04 8 n/a n/a			
BCDL	5.0	Code FBC2004/TPI2002		(Matrix)				Weight: 112 lb	

LUMBER
TOP CHORD 2 X 4 SYP No.2
BOT CHORD 2 X 4 SYP No.2
WEBS 2 X 4 SYP No.3

BRACING
TOP CHORD Structural wood sheathing directly applied or 4-8-14 oc purlins, except end verticals.
BOT CHORD Rigid ceiling directly applied or 8-0-12 oc bracing.
WEBS 1 Row at midpt 5-8, 4-8

REACTIONS (lb/size) 8=836/Mechanical, 2=951/0-3-8
Max Horz 2=440(load case 5)
Max Uplift8=-396(load case 5), 2=-358(load case 5)

FORCES (lb) - Maximum Compression/Maximum Tension
TOP CHORD 1-2=0/40, 2-3=-1521/331, 3-4=-805/150, 4-5=-95/38, 5-6=-2/0, 5-8=-153/136
BOT CHORD 2-11=-612/1334, 10-11=-612/1334, 9-10=-612/1334, 8-9=-320/681, 7-8=0/0
WEBS 3-11=0/220, 3-9=-720/322, 4-9=-89/496, 4-8=-880/413

NOTES
1) Wind: ASCE 7-02; 110mph (3-second gust); h=24ft; TCDL=4.2psf; BCDL=3.0psf; Category II; Exp B; enclosed; MWFRS gable end zone and C-C Interior(1) zone; Lumber DOL=1.60 plate grip DOL=1.60. This truss is designed for C-C for members and forces, and for MWFRS for reactions specified.
2) Refer to girder(s) for truss to truss connections.
3) Provide mechanical connection (by others) of truss to bearing plate capable of withstanding 396 lb uplift at joint 8 and 358 lb uplift at joint 2.

LOAD CASE(S) Standard

NOVEMBER 02, 2006 TRUSS DESIGN ENGINEER:
THOMAS E. MILLER PE 56877, BYRON K. ANDERSON PE 60987
STRUCTURAL ENGINEERING AND INSPECTIONS, INC. EB 9196
16105 N. FLORIDA AVE. STE B, LUTZ, FL 33549

Dwg.#1102061083

Job	Truss	Truss Type	Qty	Ply	LINTON RESIDENCE
L216061	T05A	MONO TRUSS	5	1	Job Reference (optional)

Builders FirstSource, Lake City, Fl 32055 — 6.300 s Apr 19 2006 MiTek Industries, Inc. Wed Nov 01 16:18:53 2006 Page 1

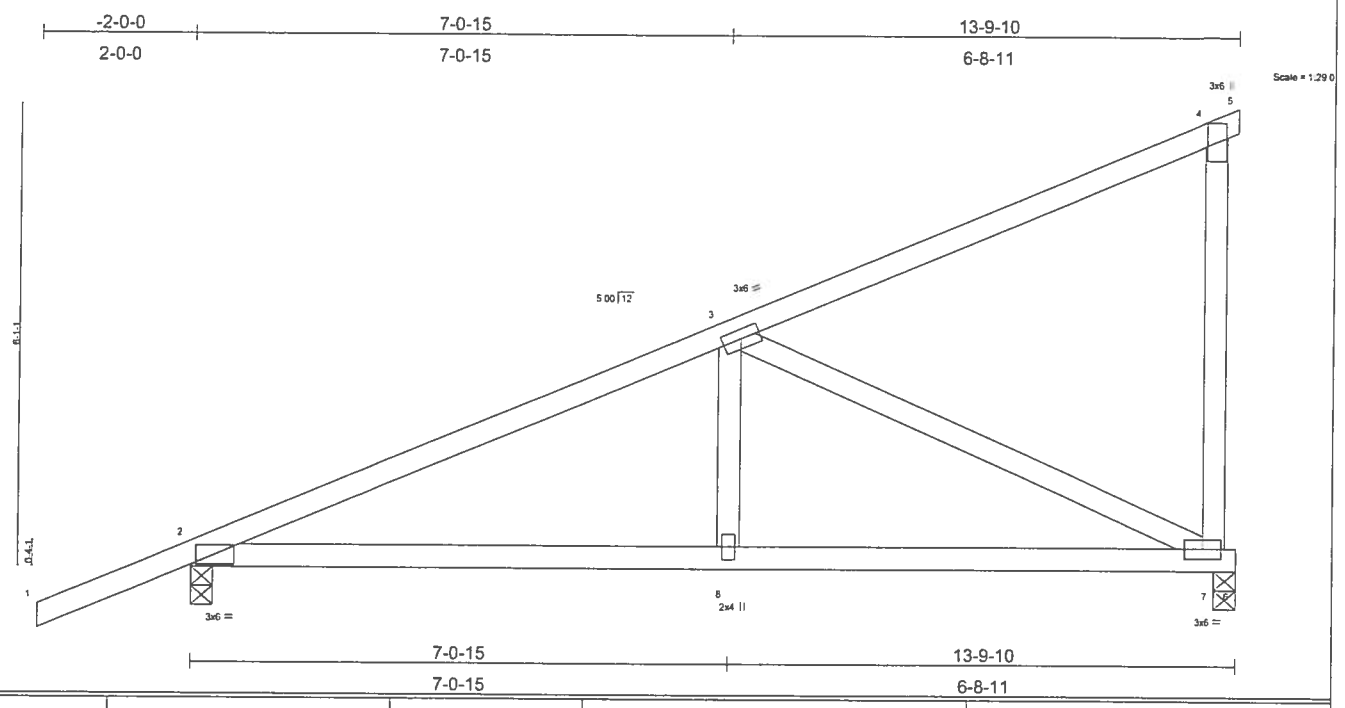

LOADING (psf)		SPACING 2-0-0		CSI		DEFL in (loc) l/defl L/d		PLATES GRIP
TCLL	20.0	Plates Increase	1.25	TC	0.38	Vert(LL) -0.08 2-8 >999 240		MT20 244/190
TCDL	7.0	Lumber Increase	1.25	BC	0.31	Vert(TL) -0.13 2-8 >999 180		
BCLL	10.0	Rep Stress Incr	YES	WB	0.68	Horz(TL) 0.02 7 n/a n/a		
BCDL	5.0	Code FBC2004/TPI2002		(Matrix)				Weight: 68 lb

LUMBER
TOP CHORD 2 X 4 SYP No.2
BOT CHORD 2 X 4 SYP No.2
WEBS 2 X 4 SYP No.3

BRACING
TOP CHORD Structural wood sheathing directly applied or 6-0-0 oc purlins, except end verticals.
BOT CHORD Rigid ceiling directly applied or 10-0-0 oc bracing.

REACTIONS (lb/size) 7=565/0-3-8, 2=686/0-3-8
Max Horz 2=318(load case 5)
Max Uplift7=-265(load case 5), 2=-286(load case 5)

FORCES (lb) - Maximum Compression/Maximum Tension
TOP CHORD 1-2=0/40, 2-3=-864/154, 3-4=-108/26, 4-5=-2/0, 4-7=-144/134
BOT CHORD 2-8=-328/733, 7-8=-328/733, 6-7=0/0
WEBS 3-8=0/228, 3-7=-774/344

NOTES
1) Wind: ASCE 7-02; 110mph (3-second gust); h=24ft; TCDL=4.2psf; BCDL=3.0psf; Category II; Exp B; enclosed; MWFRS gable end zone and C-C Interior(1) zone; Lumber DOL=1.60 plate grip DOL=1.60. This truss is designed for C-C for members and forces, and for MWFRS for reactions specified.
2) Provide mechanical connection (by others) of truss to bearing plate capable of withstanding 265 lb uplift at joint 7 and 286 lb uplift at joint 2.

LOAD CASE(S) Standard

NOVEMBER 02, 2006 TRUSS DESIGN ENGINEER:
THOMAS E. MILLER PE 56877, BYRON K. ANDERSON PE 60987
STRUCTURAL ENGINEERING AND INSPECTIONS, INC. EB 9196
16105 N. FLORIDA AVE. STE B, LUTZ, FL 33549

Dwg.#1102061084

Job	Truss	Truss Type	Qty	Ply	LINTON RESIDENCE
L216061	T06	COMMON	1	1	Job Reference (optional)

Builders FirstSource, Lake City, Fl 32055

6.300 s Apr 19 2006 MiTek Industries, Inc. Wed Nov 01 16:19:32 2006 Page 1

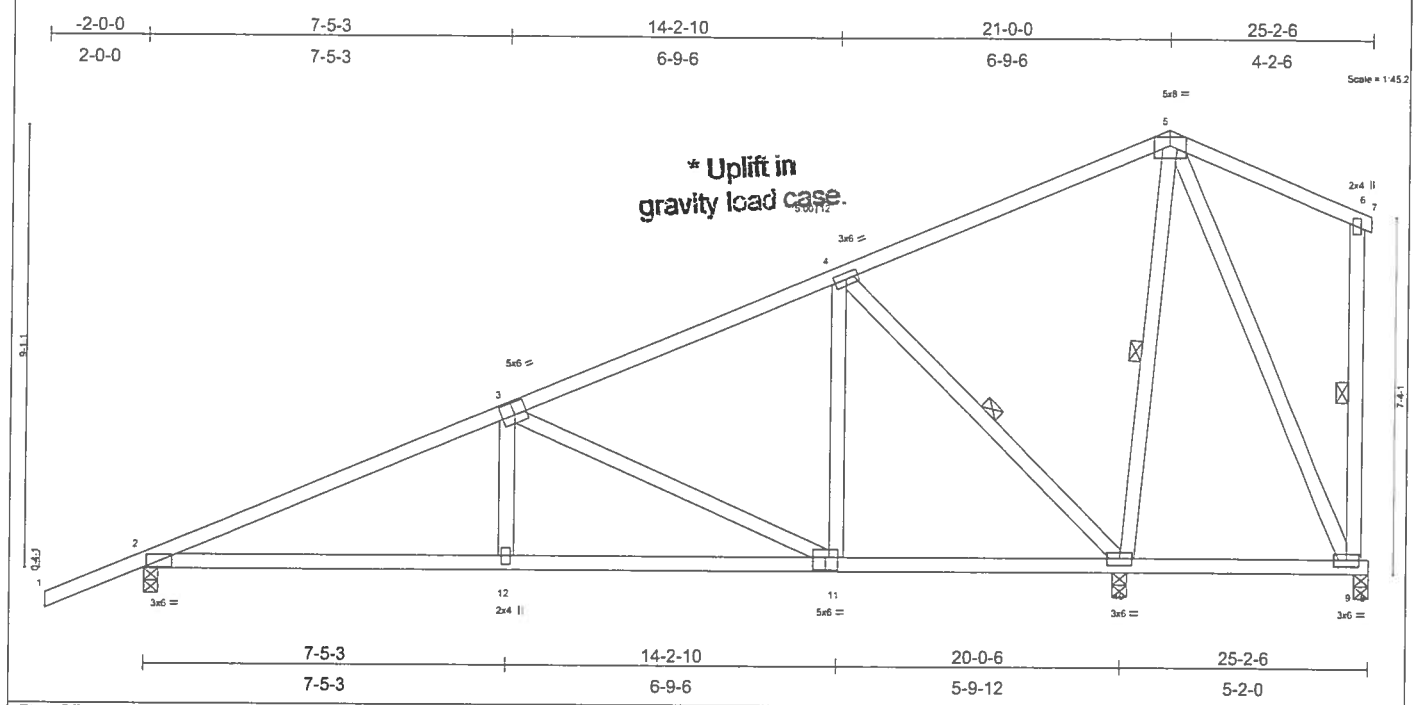

Plate Offsets (X,Y): [3:0-3-0,0-3-0], [11:0-3-0,0-3-0]

LOADING (psf)		SPACING 2-0-0		CSI		DEFL	in	(loc)	l/defl	L/d	PLATES	GRIP
TCLL	20.0	Plates Increase	1.25	TC	0.32	Vert(LL)	-0.11	2-12	>999	240	MT20	244/190
TCDL	7.0	Lumber Increase	1.25	BC	0.47	Vert(TL)	-0.19	2-12	>999	180		
BCLL	10.0	Rep Stress Incr	YES	WB	0.76	Horz(TL)	0.03	10	n/a	n/a		
BCDL	5.0	Code FBC2004/TPI2002		(Matrix)							Weight: 154 lb	

LUMBER
TOP CHORD 2 X 4 SYP No.2
BOT CHORD 2 X 4 SYP No.2
WEBS 2 X 4 SYP No.3

BRACING
TOP CHORD Structural wood sheathing directly applied or 5-2-7 oc purlins, except end verticals.
BOT CHORD Rigid ceiling directly applied or 6-0-0 oc bracing.
WEBS 1 Row at midpt 4-10, 5-10, 6-9

REACTIONS (lb/size) 2=846/0-3-8, 10=1614/0-3-8, 9=-264/0-3-8
Max Horz 2=404(load case 5)
Max Uplift2=-340(load case 5), 10=-615(load case 5), 9=-373(load case 9)
Max Grav 2=846(load case 1), 10=1614(load case 1), 9=104(load case 5)

FORCES (lb) - Maximum Compression/Maximum Tension
TOP CHORD 1-2=0/40, 2-3=-1233/275, 3-4=-457/82, 4-5=-117/354, 5-6=-44/54, 6-7=0/0, 6-9=-97/66
BOT CHORD 2-12=-521/1066, 11-12=-522/1059, 10-11=-207/356, 9-10=-185/51, 8-9=0/0
WEBS 3-12=0/242, 3-11=-778/348, 4-11=-109/511, 4-10=-875/421, 5-10=-819/347, 5-9=-120/450

NOTES
1) Unbalanced roof live loads have been considered for this design.
2) Wind: ASCE 7-02; 110mph (3-second gust); h=24ft; TCDL=4.2psf; BCDL=3.0psf; Category II; Exp B; enclosed; MWFRS gable end zone and C-C Interior(1) zone; Lumber DOL=1.60 plate grip DOL=1.60. This truss is designed for C-C for members and forces, and for MWFRS for reactions specified.
3) Provide mechanical connection (by others) of truss to bearing plate capable of withstanding 340 lb uplift at joint 2, 615 lb uplift at joint 10 and 373 lb uplift at joint 9.

LOAD CASE(S) Standard

NOVEMBER 02, 2006 TRUSS DESIGN ENGINEER:
THOMAS E. MILLER PE 56877, BYRON K. ANDERSON PE 60987
STRUCTURAL ENGINEERING AND INSPECTIONS, INC. EB 9196
16105 N. FLORIDA AVE. STE B, LUTZ, FL 33549

Dwg.#1102061085

Job	Truss	Truss Type	Qty	Ply	LINTON RESIDENCE
L216061	T06A	COMMON	1	1	Job Reference (optional)

Builders FirstSource, Lake City, Fl 32055 — 6.300 s Apr 19 2006 MiTek Industries, Inc. Wed Nov 01 16:19:55 2006 Page 1

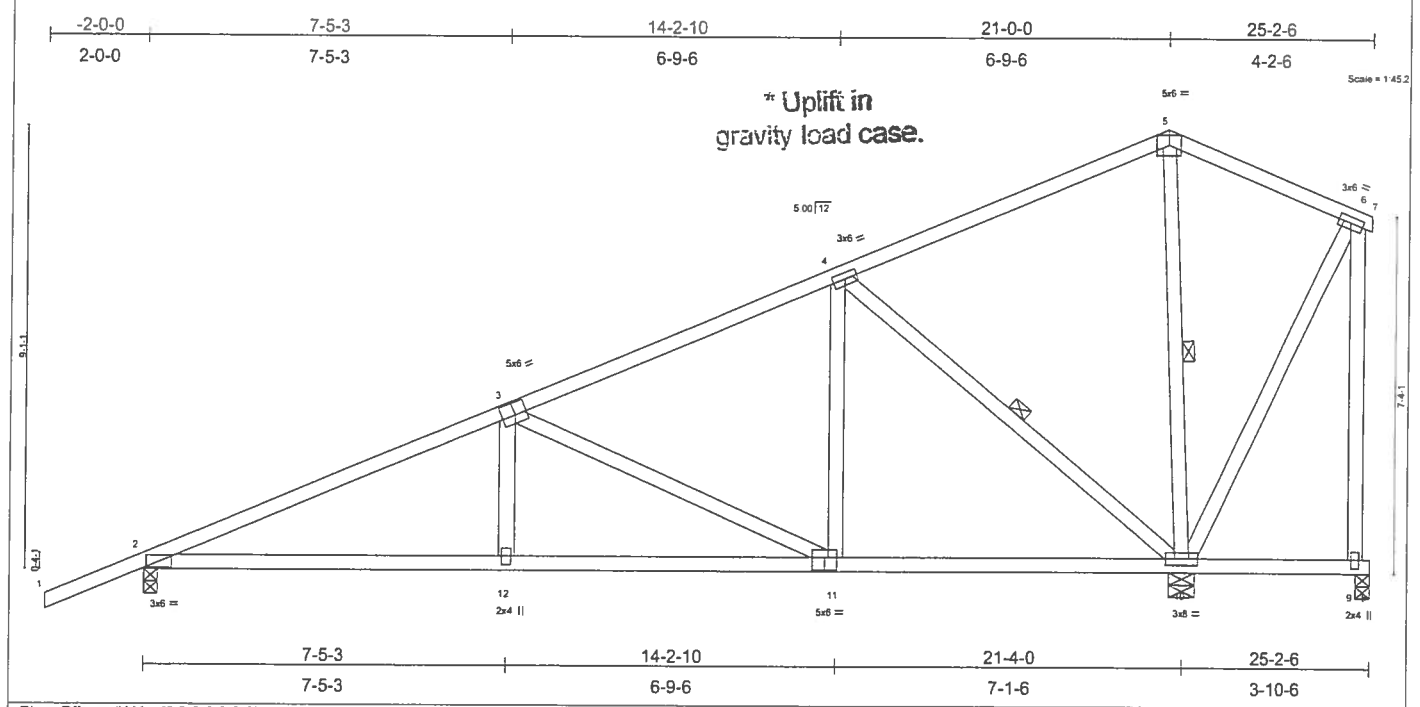

Plate Offsets (X,Y): [3:0-3-0,0-3-0], [11:0-3-0,0-3-0]

LOADING (psf)		SPACING 2-0-0		CSI		DEFL	in	(loc)	l/defl	L/d	PLATES	GRIP
TCLL	20.0	Plates Increase	1.25	TC	0.37	Vert(LL)	-0.12	2-12	>999	240	MT20	244/190
TCDL	7.0	Lumber Increase	1.25	BC	0.47	Vert(TL)	-0.20	2-12	>999	180		
BCLL	10.0	Rep Stress Incr	YES	WB	0.75	Horz(TL)	0.03	10	n/a	n/a		
BCDL	5.0	Code FBC2004/TPI2002		(Matrix)							Weight: 152 lb	

LUMBER
TOP CHORD 2 X 4 SYP No.2
BOT CHORD 2 X 4 SYP No.2
WEBS 2 X 4 SYP No.3

BRACING
TOP CHORD Structural wood sheathing directly applied or 4-11-11 oc purlins, except end verticals.
BOT CHORD Rigid ceiling directly applied or 6-0-0 oc bracing.
WEBS 1 Row at midpt 4-10, 5-10

REACTIONS (lb/size) 2=888/0-3-8, 9=-586/0-3-8, 10=1894/0-6-7
Max Horz 2=404(load case 5)
Max Uplift2=-356(load case 5), 9=-650(load case 9), 10=-722(load case 5)
Max Grav 2=889(load case 9), 9=227(load case 5), 10=1894(load case 1)

FORCES (lb) - Maximum Compression/Maximum Tension
TOP CHORD 1-2=0/40, 2-3=-1339/316, 3-4=-573/122, 4-5=-120/345, 5-6=-99/356, 6-7=0/0, 6-9=-219/665
BOT CHORD 2-12=-558/1164, 11-12=-559/1157, 10-11=-244/463, 9-10=-5/4, 8-9=0/0
WEBS 3-12=0/236, 3-11=-769/349, 4-11=-105/532, 4-10=-936/436, 5-10=-549/276, 6-10=-616/222

NOTES
1) Unbalanced roof live loads have been considered for this design.
2) Wind: ASCE 7-02; 110mph (3-second gust); h=24ft; TCDL=4.2psf; BCDL=3.0psf; Category II; Exp B; enclosed; MWFRS gable end zone and C-C Interior(1) zone; Lumber DOL=1.60 plate grip DOL=1.60. This truss is designed for C-C for members and forces, and for MWFRS for reactions specified.
3) Provide mechanical connection (by others) of truss to bearing plate capable of withstanding 356 lb uplift at joint 2, 650 lb uplift at joint 9 and 722 lb uplift at joint 10.

LOAD CASE(S) Standard

NOVEMBER 02, 2006 TRUSS DESIGN ENGINEER:
THOMAS E. MILLER PE 56877, BYRON K. ANDERSON PE 60987
STRUCTURAL ENGINEERING AND INSPECTIONS, INC. EB 9196
16105 N. FLORIDA AVE. STE B, LUTZ, FL 33549

Dwg.#1102061086

Job	Truss	Truss Type	Qty	Ply	LINTON RESIDENCE
L216061	T06B	COMMON	1	1	Job Reference (optional)

Builders FirstSource, Lake City, Fl 32055 — 6.300 s Apr 19 2006 MiTek Industries, Inc. Wed Nov 01 16:20:49 2006 Page 1

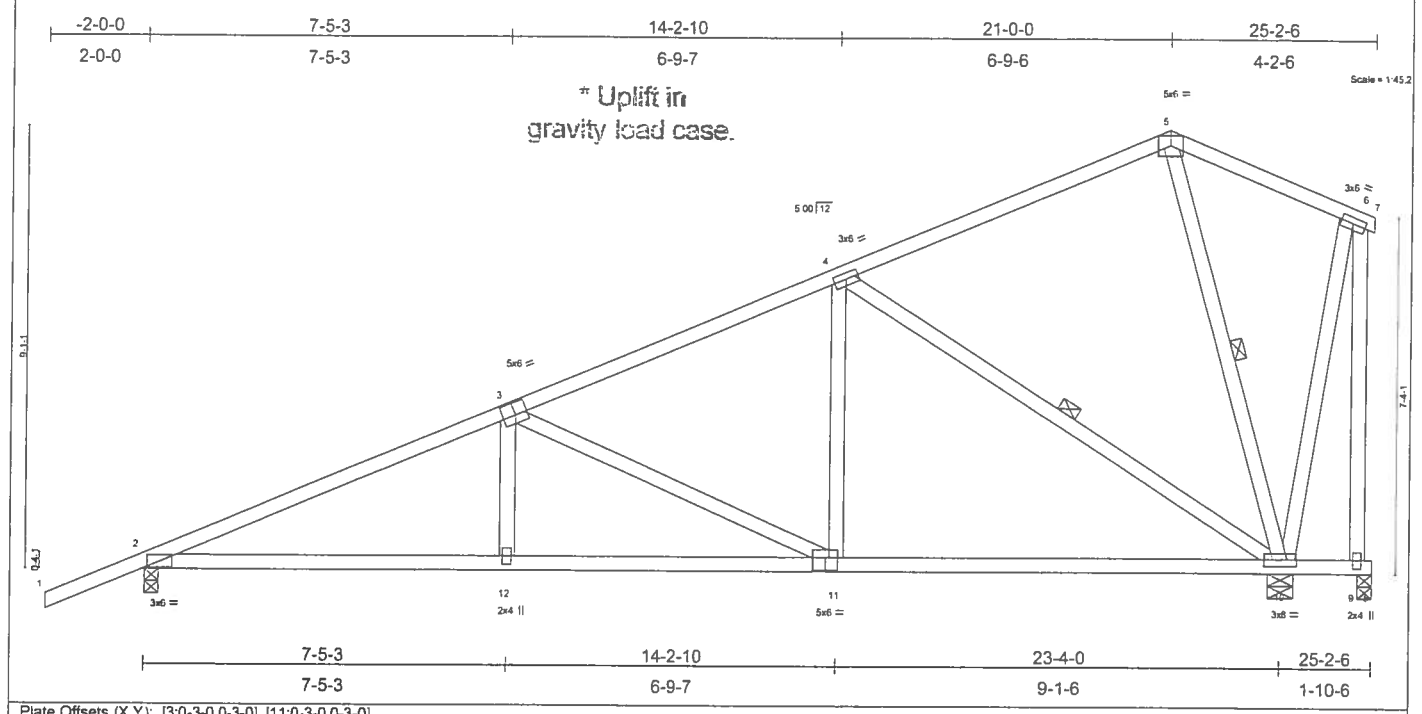

Plate Offsets (X,Y): [3:0-3-0,0-3-0], [11:0-3-0,0-3-0]

LOADING (psf)		SPACING 2-0-0		CSI		DEFL in (loc) l/defl L/d		PLATES	GRIP
TCLL	20.0	Plates Increase	1.25	TC	0.35	Vert(LL) -0.14 10-11 >999 240		MT20	244/190
TCDL	7.0	Lumber Increase	1.25	BC	0.56	Vert(TL) -0.24 10-11 >999 180			
BCLL	10.0	Rep Stress Incr	YES	WB	0.73	Horz(TL) 0.05 10 n/a n/a			
BCDL	5.0	Code FBC2004/TPI2002		(Matrix)				Weight: 155 lb	

LUMBER
TOP CHORD 2 X 4 SYP No.2
BOT CHORD 2 X 4 SYP No.2
WEBS 2 X 4 SYP No.3

BRACING
TOP CHORD Structural wood sheathing directly applied or 4-3-11 oc purlins, except end verticals.
BOT CHORD Rigid ceiling directly applied or 6-0-0 oc bracing.
WEBS 1 Row at midpt 4-10, 5-10

REACTIONS (lb/size) 2=1054/0-3-8, 9=-562/0-3-8, 10=1716/0-6-7
Max Horz 2=401(load case 5)
Max Uplift2=-425(load case 5), 9=-609(load case 9), 10=-582(load case 5)
Max Grav 2=1054(load case 1), 9=153(load case 5), 10=1716(load case 1)

FORCES (lb) - Maximum Compression/Maximum Tension
TOP CHORD 1-2=0/40, 2-3=-1752/491, 3-4=-1003/296, 4-5=-71/88, 5-6=-29/169, 6-7=0/2, 6-9=-164/473
BOT CHORD 2-12=-715/1544, 11-12=-716/1537, 10-11=-402/860, 9-10=-10/1, 8-9=0/0
WEBS 3-12=0/224, 3-11=-750/348, 4-11=-98/558, 4-10=-1033/460, 5-10=-387/211, 6-10=-465/180

NOTES
1) Unbalanced roof live loads have been considered for this design.
2) Wind: ASCE 7-02; 110mph (3-second gust); h=24ft; TCDL=4.2psf; BCDL=3.0psf; Category II; Exp B; enclosed; MWFRS gable end zone and C-C Interior(1) zone; Lumber DOL=1.60 plate grip DOL=1.60. This truss is designed for C-C for members and forces, and for MWFRS for reactions specified.
3) Provide mechanical connection (by others) of truss to bearing plate capable of withstanding 425 lb uplift at joint 2, 609 lb uplift at joint 9 and 582 lb uplift at joint 10.

LOAD CASE(S) Standard

NOVEMBER 02, 2006 TRUSS DESIGN ENGINEER:
THOMAS E. MILLER PE 56877, BYRON K. ANDERSON PE 60987
STRUCTURAL ENGINEERING AND INSPECTIONS, INC. EB 9196
16105 N. FLORIDA AVE. STE B, LUTZ, FL 33549

Dwg.#1102061087

Job	Truss	Truss Type	Qty	Ply	LINTON RESIDENCE
L216061	T07	MONO TRUSS	5	1	Job Reference (optional)

Builders FirstSource, Lake City, Fl 32055 — 6.300 s Apr 19 2006 MiTek Industries, Inc. Wed Nov 01 16:21:15 2006 Page 1

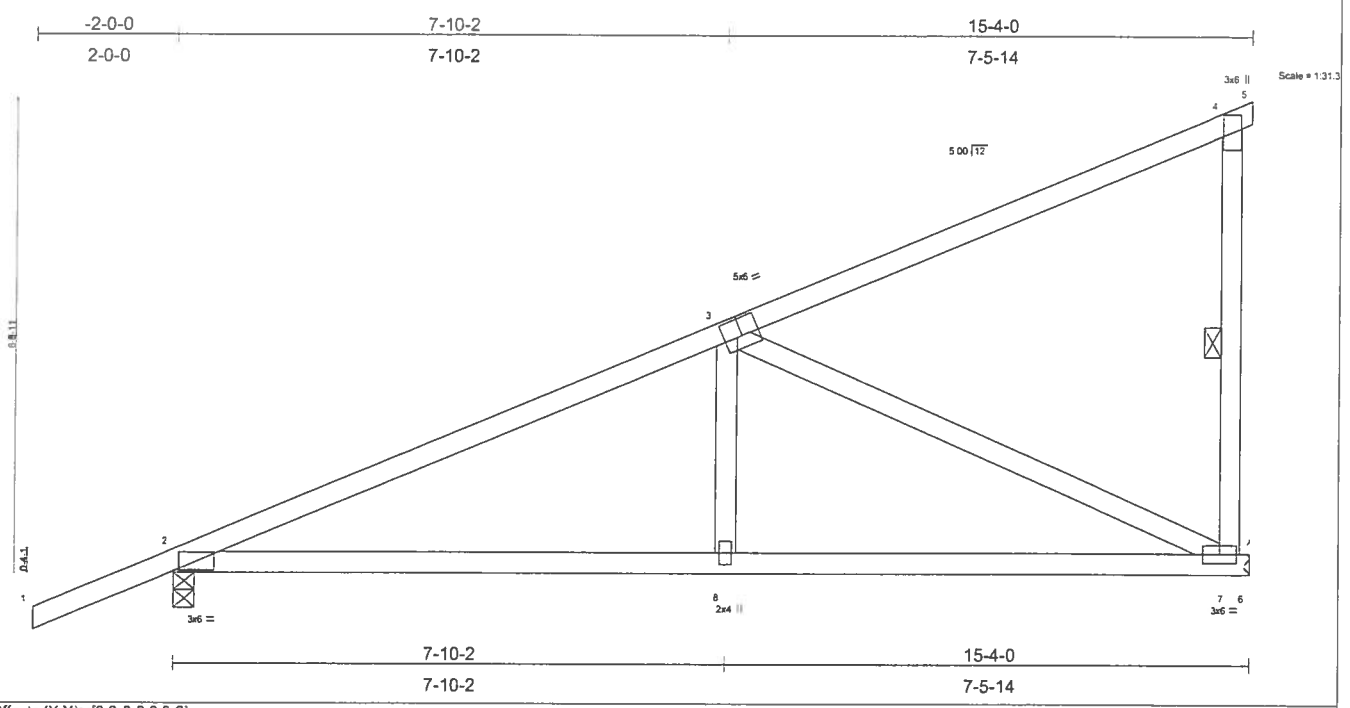

Plate Offsets (X,Y) [3:0-3-0,0-3-0]

LOADING (psf)		SPACING 2-0-0		CSI		DEFL	in	(loc)	l/defl	L/d	PLATES	GRIP
TCLL	20.0	Plates Increase	1.25	TC	0.47	Vert(LL)	-0.12	2-8	>999	240	MT20	244/190
TCDL	7.0	Lumber Increase	1.25	BC	0.38	Vert(TL)	-0.20	2-8	>908	180		
BCLL	10.0	Rep Stress Incr	YES	WB	0.96	Horz(TL)	0.02	7	n/a	n/a		
BCDL	5.0	Code FBC2004/TPI2002		(Matrix)							Weight: 76 lb	

LUMBER
TOP CHORD 2 X 4 SYP No.2
BOT CHORD 2 X 4 SYP No.2
WEBS 2 X 4 SYP No.3

BRACING
TOP CHORD Structural wood sheathing directly applied or 5-9-14 oc purlins, except end verticals.
BOT CHORD Rigid ceiling directly applied or 10-0-0 oc bracing.
WEBS 1 Row at midpt 4-7

REACTIONS (lb/size) 7=630/Mechanical, 2=750/0-3-8
Max Horz 2=347(load case 5)
Max Uplift7=-297(load case 5), 2=-303(load case 5)

FORCES (lb) - Maximum Compression/Maximum Tension
TOP CHORD 1-2=0/40, 2-3=-977/182, 3-4=-121/29, 4-5=-2/0, 4-7=-160/148
BOT CHORD 2-8=-377/831, 7-8=-377/831, 6-7=0/0
WEBS 3-8=0/258, 3-7=-877/395

NOTES
1) Wind: ASCE 7-02; 110mph (3-second gust); h=24ft; TCDL=4.2psf; BCDL=3.0psf; Category II; Exp B; enclosed; MWFRS gable end zone and C-C Interior(1) zone; Lumber DOL=1.60 plate grip DOL=1.60. This truss is designed for C-C for members and forces, and for MWFRS for reactions specified.
2) Refer to girder(s) for truss to truss connections.
3) Provide mechanical connection (by others) of truss to bearing plate capable of withstanding 297 lb uplift at joint 7 and 303 lb uplift at joint 2.

LOAD CASE(S) Standard

NOVEMBER 02, 2006 TRUSS DESIGN ENGINEER:
THOMAS E. MILLER PE 56877, BYRON K. ANDERSON PE 60987
STRUCTURAL ENGINEERING AND INSPECTIONS, INC. EB 9196
16105 N. FLORIDA AVE. STE B, LUTZ, FL 33549

Dwg.#1102061088

Job	Truss	Truss Type	Qty	Ply	LINTON RESIDENCE
L216061	T08	MONO TRUSS	5	1	Job Reference (optional)

Builders FirstSource, Lake City, Fl 32055 — 6.300 s Apr 19 2006 MiTek Industries, Inc. Wed Nov 01 16:22:03 2006 Page 1

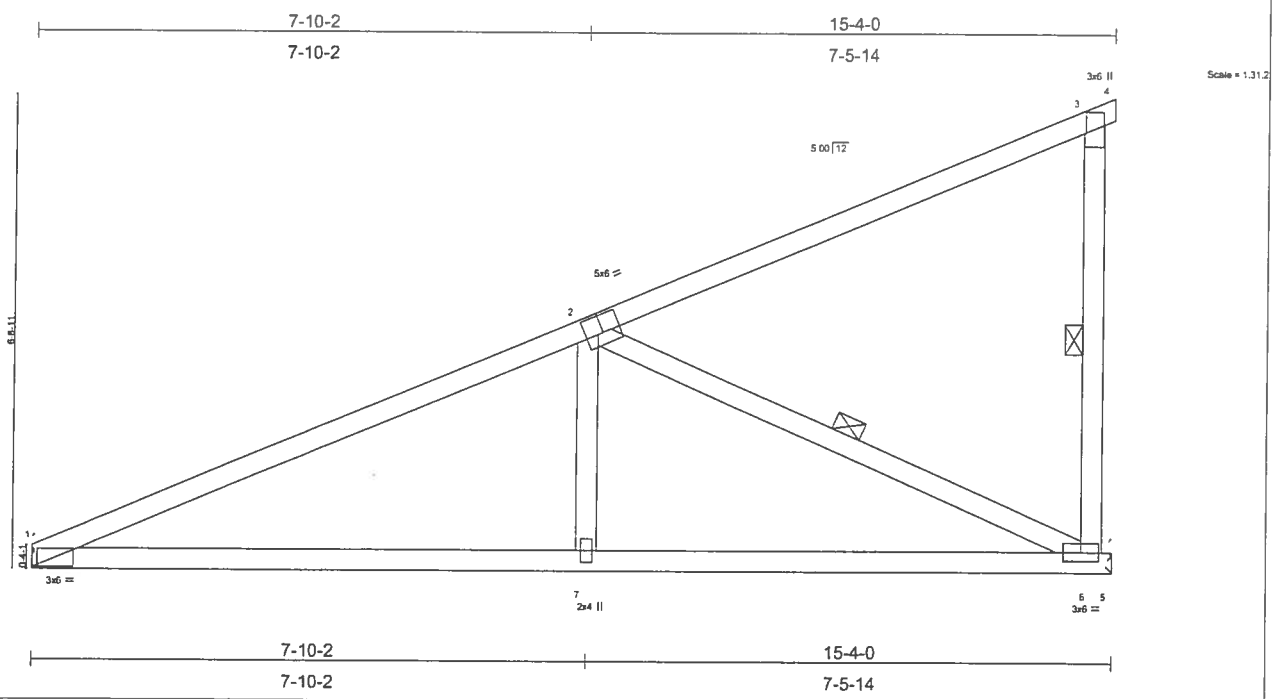

Plate Offsets (X,Y): [2:0-3-0,0-3-0]

LOADING (psf)		SPACING 2-0-0		CSI		DEFL	in	(loc)	l/defl	L/d	PLATES	GRIP
TCLL	20.0	Plates Increase	1.25	TC	0.44	Vert(LL)	-0.15	1-7	>999	240	MT20	244/190
TCDL	7.0	Lumber Increase	1.25	BC	0.52	Vert(TL)	-0.25	1-7	>720	180		
BCLL	10.0	Rep Stress Incr	YES	WB	0.29	Horz(TL)	0.02	6	n/a	n/a		
BCDL	5.0	Code FBC2004/TPI2002		(Matrix)							Weight: 72 lb	

LUMBER
TOP CHORD 2 X 4 SYP No.2
BOT CHORD 2 X 4 SYP No.2
WEBS 2 X 4 SYP No.3

BRACING
TOP CHORD Structural wood sheathing directly applied or 5-7-1 oc purlins, except end verticals.
BOT CHORD Rigid ceiling directly applied or 9-3-9 oc bracing.
WEBS 1 Row at midpt 3-6, 2-6

REACTIONS (lb/size) 6=642/Mechanical, 1=629/Mechanical
Max Horz 1=295(load case 5)
Max Uplift6=-308(load case 5), 1=-174(load case 5)

FORCES (lb) - Maximum Compression/Maximum Tension
TOP CHORD 1-2=-1013/218, 2-3=-120/30, 3-4=-2/0, 3-6=-157/145
BOT CHORD 1-7=-414/869, 6-7=-414/869, 5-6=0/0
WEBS 2-7=0/274, 2-6=-922/439

NOTES
1) Wind: ASCE 7-02; 110mph (3-second gust); h=24ft; TCDL=4.2psf; BCDL=3.0psf; Category II; Exp B; enclosed; MWFRS gable end zone and C-C Interior(1) zone; Lumber DOL=1.60 plate grip DOL=1.60. This truss is designed for C-C for members and forces, and for MWFRS for reactions specified.
2) Refer to girder(s) for truss to truss connections.
3) Provide mechanical connection (by others) of truss to bearing plate capable of withstanding 308 lb uplift at joint 6 and 174 lb uplift at joint 1.

LOAD CASE(S) Standard

NOVEMBER 02, 2006 TRUSS DESIGN ENGINEER:
THOMAS E. MILLER PE 56877, BYRON K. ANDERSON PE 60987
STRUCTURAL ENGINEERING AND INSPECTIONS, INC. EB 9196
16105 N. FLORIDA AVE. STE B, LUTZ, FL 33549

Dwg.#1102061089

Job	Truss	Truss Type	Qty	Ply	LINTON RESIDENCE
L216061	T09	MONO HIP	1	1	Job Reference (optional)

Builders FirstSource, Lake City, Fl 32055 — 6.300 s Apr 19 2006 MiTek Industries, Inc. Wed Nov 01 16:22:26 2006 Page 1

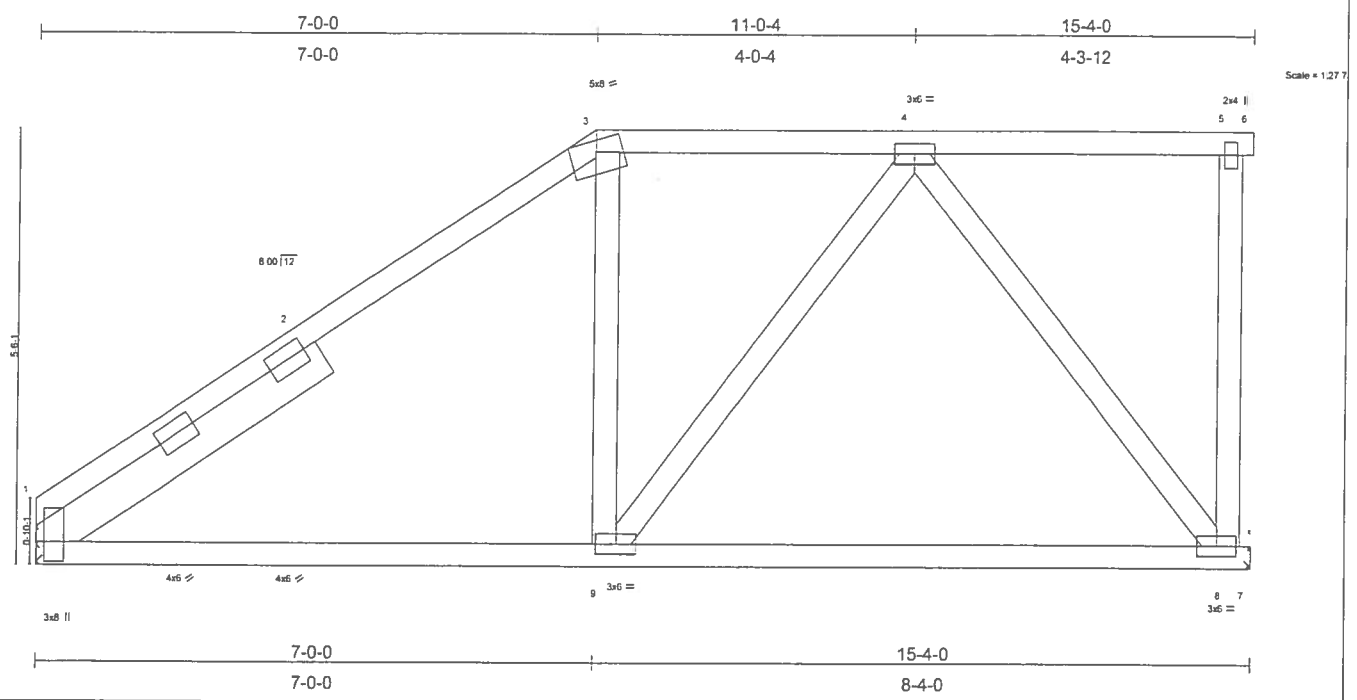

Plate Offsets (X,Y): [1:0-3-0,0-1-3]

LOADING (psf)		SPACING 2-0-0		CSI		DEFL	in	(loc)	l/defl	L/d	PLATES	GRIP
TCLL	20.0	Plates Increase	1.25	TC	0.37	Vert(LL)	-0.06	8-9	>999	240	MT20	244/190
TCDL	7.0	Lumber Increase	1.25	BC	0.33	Vert(TL)	-0.11	8-9	>999	180		
BCLL	10.0	Rep Stress Incr	YES	WB	0.40	Horz(TL)	0.01	8	n/a	n/a		
BCDL	5.0	Code FBC2004/TPI2002		(Matrix)							Weight: 91 lb	

LUMBER
TOP CHORD 2 X 4 SYP No.2
BOT CHORD 2 X 4 SYP No.2
WEBS 2 X 4 SYP No.3
SLIDER Left 2 X 6 SYP No.1D 4-3-12

BRACING
TOP CHORD Structural wood sheathing directly applied or 6-0-0 oc purlins, except end verticals.
BOT CHORD Rigid ceiling directly applied or 10-0-0 oc bracing.

REACTIONS (lb/size) 1=632/Mechanical, 8=645/Mechanical
Max Horz 1=240(load case 5)
Max Uplift1=-167(load case 5), 8=-237(load case 4)

FORCES (lb) - Maximum Compression/Maximum Tension
TOP CHORD 1-2=-720/139, 2-3=-622/159, 3-4=-518/226, 4-5=-31/1, 5-6=0/0, 5-8=-117/78
BOT CHORD 1-9=-230/516, 8-9=-142/348, 7-8=0/0
WEBS 3-9=-30/158, 4-9=-160/284, 4-8=-519/232

NOTES
1) Wind: ASCE 7-02; 110mph (3-second gust); h=24ft; TCDL=4.2psf; BCDL=3.0psf; Category II; Exp B; enclosed; MWFRS gable end zone and C-C Interior(1) zone; Lumber DOL=1.60 plate grip DOL=1.60. This truss is designed for C-C for members and forces, and for MWFRS for reactions specified.
2) Provide adequate drainage to prevent water ponding.
3) Refer to girder(s) for truss to truss connections.
4) Provide mechanical connection (by others) of truss to bearing plate capable of withstanding 167 lb uplift at joint 1 and 237 lb uplift at joint 8.

LOAD CASE(S) Standard

NOVEMBER 02, 2006 TRUSS DESIGN ENGINEER:
THOMAS E. MILLER PE 56877, BYRON K. ANDERSON PE 60987
STRUCTURAL ENGINEERING AND INSPECTIONS, INC. EB 9196
16105 N. FLORIDA AVE. STE B, LUTZ, FL 33549

Dwg.#1102061090

Job	Truss	Truss Type	Qty	Ply	LINTON RESIDENCE
L216061	T10	MONO HIP	1	1	Job Reference (optional)

Builders FirstSource, Lake City, Fl 32055 — 6.300 s Apr 19 2006 MiTek Industries, Inc. Wed Nov 01 16:22:48 2006 Page 1

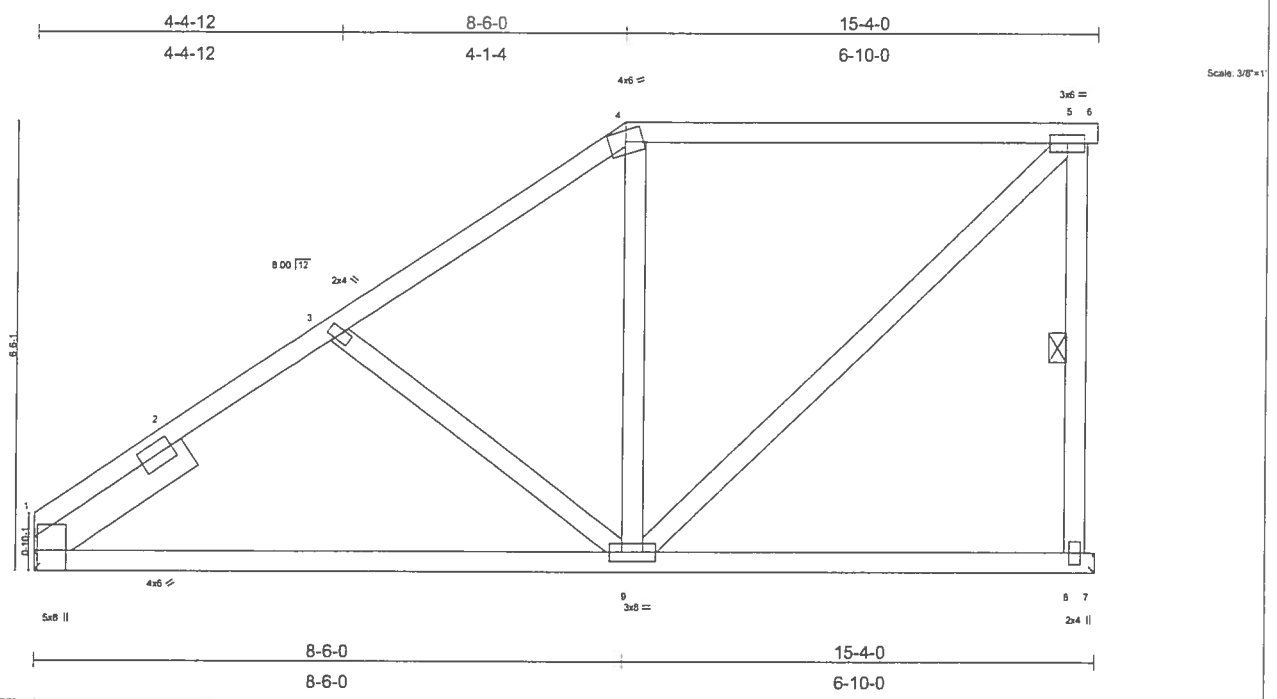

Plate Offsets (X,Y): [1:0-3-8,Edge]

LOADING (psf)		SPACING	2-0-0	CSI		DEFL	in	(loc)	l/defl	L/d	PLATES	GRIP
TCLL	20.0	Plates Increase	1.25	TC	0.45	Vert(LL)	-0.09	1-9	>999	240	MT20	244/190
TCDL	7.0	Lumber Increase	1.25	BC	0.34	Vert(TL)	-0.15	1-9	>999	180		
BCLL	10.0	Rep Stress Incr	YES	WB	0.34	Horz(TL)	0.01	8	n/a	n/a		
BCDL	5.0	Code FBC2004/TPI2002		(Matrix)							Weight: 93 lb	

LUMBER
TOP CHORD 2 X 4 SYP No.2
BOT CHORD 2 X 4 SYP No.2
WEBS 2 X 4 SYP No.3
SLIDER Left 2 X 6 SYP No.1D 2-8-1

BRACING
TOP CHORD Structural wood sheathing directly applied or 6-0-0 oc purlins, except end verticals.
BOT CHORD Rigid ceiling directly applied or 10-0-0 oc bracing.
WEBS 1 Row at midpt 5-8

REACTIONS (lb/size) 1=632/Mechanical, 8=645/Mechanical
Max Horz 1=286(load case 5)
Max Uplift1=-159(load case 5), 8=-232(load case 4)

FORCES (lb) - Maximum Compression/Maximum Tension
TOP CHORD 1-2=-747/185, 2-3=-668/199, 3-4=-557/151, 4-5=-423/183, 5-6=0/0, 5-8=-553/245
BOT CHORD 1-9=-353/556, 8-9=-19/30, 7-8=0/0
WEBS 3-9=-167/212, 4-9=-44/136, 5-9=-245/546

NOTES
1) Wind: ASCE 7-02; 110mph (3-second gust); h=24ft; TCDL=4.2psf; BCDL=3.0psf; Category II; Exp B; enclosed; MWFRS gable end zone and C-C Interior(1) zone; Lumber DOL=1.60 plate grip DOL=1.60. This truss is designed for C-C for members and forces, and for MWFRS for reactions specified.
2) Provide adequate drainage to prevent water ponding.
3) Refer to girder(s) for truss to truss connections.
4) Provide mechanical connection (by others) of truss to bearing plate capable of withstanding 159 lb uplift at joint 1 and 232 lb uplift at joint 8.

LOAD CASE(S) Standard

NOVEMBER 02, 2006 TRUSS DESIGN ENGINEER:
THOMAS E. MILLER PE 56877, BYRON K. ANDERSON PE 60987
STRUCTURAL ENGINEERING AND INSPECTIONS, INC. EB 9196
16105 N. FLORIDA AVE. STE B, LUTZ, FL 33549

Dwg.#1102061091

Job	Truss	Truss Type	Qty	Ply	LINTON RESIDENCE
L216061	T11	MONO HIP	1	1	Job Reference (optional)

Builders FirstSource, Lake City, Fl 32055

6.300 s Apr 19 2006 MiTek Industries, Inc. Wed Nov 01 16:23:12 2006 Page 1

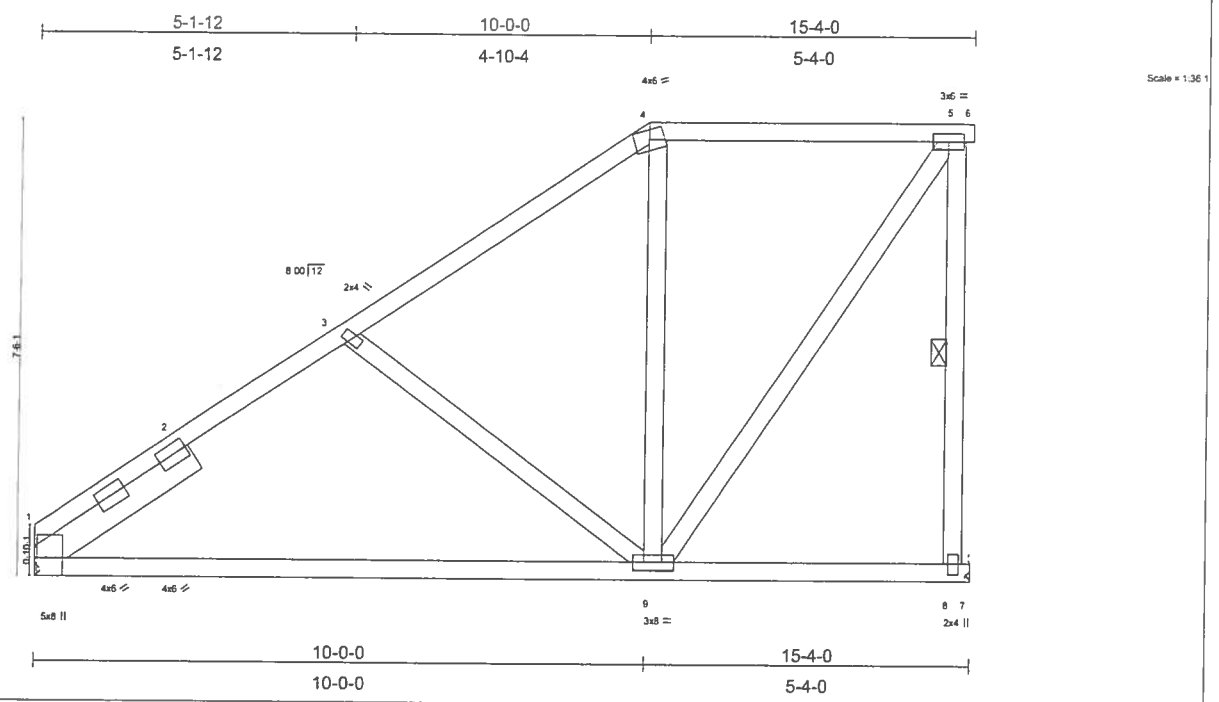

Plate Offsets (X,Y): [1:0-3-8,Edge]

LOADING (psf)		SPACING 2-0-0		CSI		DEFL in (loc) l/defl L/d				PLATES GRIP
TCLL	20.0	Plates increase	1.25	TC	0.22	Vert(LL) -0.17 1-9 >999 240				MT20 244/190
TCDL	7.0	Lumber Increase	1.25	BC	0.44	Vert(TL) -0.30 1-9 >607 180				
BCLL	10.0	Rep Stress Incr	YES	WB	0.35	Horz(TL) 0.01 8 n/a n/a				
BCDL	5.0	Code FBC2004/TPI2002		(Matrix)						Weight: 98 lb

LUMBER
TOP CHORD 2 X 4 SYP No.2
BOT CHORD 2 X 4 SYP No.2
WEBS 2 X 4 SYP No.3
SLIDER Left 2 X 6 SYP No.1D 3-1-8

BRACING
TOP CHORD Structural wood sheathing directly applied or 6-0-0 oc purlins, except end verticals.
BOT CHORD Rigid ceiling directly applied or 10-0-0 oc bracing.
WEBS 1 Row at midpt 5-8

REACTIONS (lb/size) 1=632/Mechanical, 8=645/Mechanical
Max Horz 1=332(load case 5)
Max Uplift1=-147(load case 5), 8=-263(load case 5)

FORCES (lb) - Maximum Compression/Maximum Tension
TOP CHORD 1-2=-714/158, 2-3=-636/174, 3-4=-474/109, 4-5=-331/153, 5-6=0/0, 5-8=-599/270
BOT CHORD 1-9=-369/536, 8-9=-10/9, 7-8=0/0
WEBS 3-9=-256/268, 4-9=-65/117, 5-9=-268/573

NOTES
1) Wind: ASCE 7-02; 110mph (3-second gust); h=24ft; TCDL=4.2psf; BCDL=3.0psf; Category II; Exp B; enclosed; MWFRS gable end zone and C-C Interior(1) zone; Lumber DOL=1.60 plate grip DOL=1.60. This truss is designed for C-C for members and forces, and for MWFRS for reactions specified.
2) Provide adequate drainage to prevent water ponding.
3) Refer to girder(s) for truss to truss connections.
4) Provide mechanical connection (by others) of truss to bearing plate capable of withstanding 147 lb uplift at joint 1 and 263 lb uplift at joint 8.

LOAD CASE(S) Standard

NOVEMBER 02, 2006 TRUSS DESIGN ENGINEER:
THOMAS E. MILLER PE 56877, BYRON K. ANDERSON PE 60987
STRUCTURAL ENGINEERING AND INSPECTIONS, INC. EB 9196
16105 N. FLORIDA AVE. STE B, LUTZ, FL 33549

Dwg.#1102061092

Job	Truss	Truss Type	Qty	Ply	LINTON RESIDENCE
L216061	T12	MONO HIP	1	1	Job Reference (optional)

Builders FirstSource, Lake City, Fl 32055

6.300 s Apr 19 2006 MiTek Industries, Inc. Wed Nov 01 16:23:55 2006 Page 1

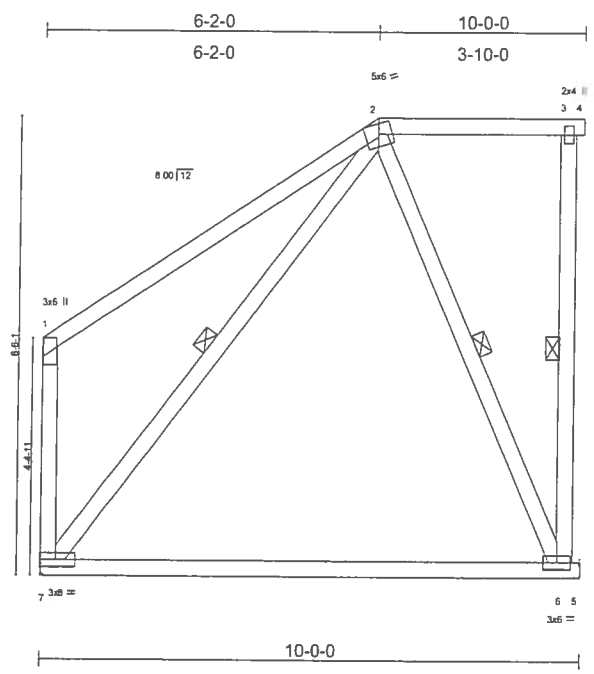

LOADING (psf)		SPACING	2-0-0	CSI		DEFL	in	(loc)	l/defl	L/d	PLATES	GRIP
TCLL	20.0	Plates Increase	1.25	TC	0.78	Vert(LL)	-0.17	6-7	>656	240	MT20	244/190
TCDL	7.0	Lumber Increase	1.25	BC	0.30	Vert(TL)	-0.31	6-7	>371	180		
BCLL	10.0	Rep Stress Incr	YES	WB	0.08	Horz(TL)	-0.00	6	n/a	n/a		
BCDL	5.0	Code FBC2004/TPI2002		(Matrix)							Weight: 77 lb	

LUMBER
TOP CHORD 2 X 4 SYP No.2
BOT CHORD 2 X 4 SYP No.2
WEBS 2 X 4 SYP No.3

BRACING
TOP CHORD Structural wood sheathing directly applied or 6-0-0 oc purlins, except end verticals.
BOT CHORD Rigid ceiling directly applied or 10-0-0 oc bracing.
WEBS 1 Row at midpt 3-6, 2-6, 2-7

REACTIONS (lb/size) 6=415/Mechanical, 7=401/Mechanical
Max Horz 7=186(load case 5)
Max Uplift6=-235(load case 5), 7=-22(load case 5)

FORCES (lb) - Maximum Compression/Maximum Tension
TOP CHORD 1-2=-194/146, 2-3=-23/0, 3-4=0/0, 3-6=-78/91, 1-7=-222/181
BOT CHORD 6-7=-110/106, 5-6=0/0
WEBS 2-6=-210/295, 2-7=-164/68

NOTES
1) Wind: ASCE 7-02; 110mph (3-second gust); h=24ft; TCDL=4.2psf; BCDL=3.0psf; Category II; Exp B; enclosed; MWFRS gable end zone and C-C Interior(1) zone; Lumber DOL=1.60 plate grip DOL=1.60. This truss is designed for C-C for members and forces, and for MWFRS for reactions specified.
2) Provide adequate drainage to prevent water ponding.
3) Refer to girder(s) for truss to truss connections.
4) Provide mechanical connection (by others) of truss to bearing plate capable of withstanding 235 lb uplift at joint 6 and 22 lb uplift at joint 7.

LOAD CASE(S) Standard

NOVEMBER 02, 2006 TRUSS DESIGN ENGINEER:
THOMAS E. MILLER PE 56877, BYRON K. ANDERSON PE 60987
STRUCTURAL ENGINEERING AND INSPECTIONS, INC. EB 9196
16105 N. FLORIDA AVE. STE B, LUTZ, FL 33549

Dwg.#1102061093

Job	Truss	Truss Type	Qty	Ply	LINTON RESIDENCE
L216061	T13	HIP	1	1	Job Reference (optional)

Builders FirstSource, Lake City, Fl 32055

6.300 s Apr 19 2006 MiTek Industries, Inc. Wed Nov 01 16:24:30 2006 Page 1

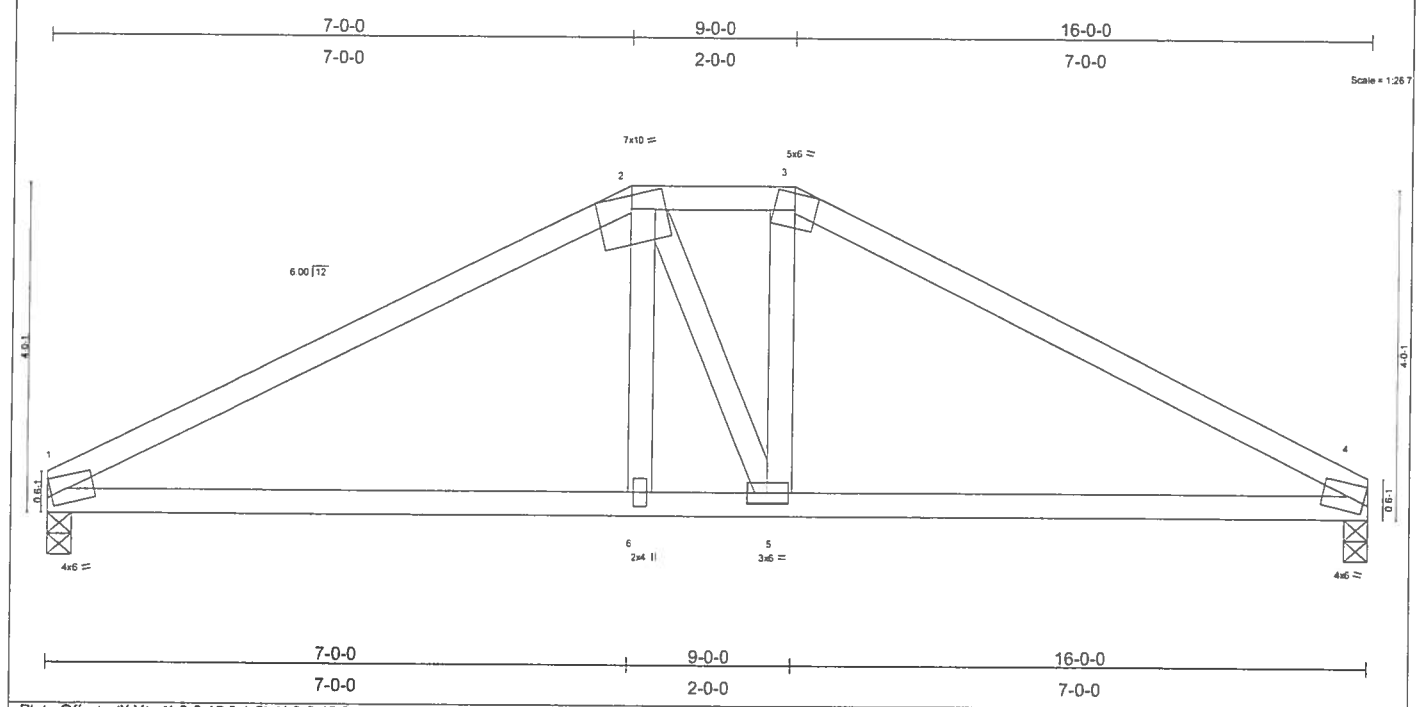

Plate Offsets (X,Y): [1:0-0-12,0-1-6], [4:0-0-12,0-1-6]

LOADING (psf)		SPACING 2-0-0		CSI		DEFL	in	(loc)	l/defl	L/d	PLATES	GRIP
TCLL	20.0	Plates Increase	1.25	TC	0.49	Vert(LL)	-0.14	1-6	>999	240	MT20	244/190
TCDL	7.0	Lumber Increase	1.25	BC	0.69	Vert(TL)	-0.22	1-6	>843	180		
BCLL	10.0	Rep Stress Incr	NO	WB	0.27	Horz(TL)	0.05	4	n/a	n/a		
BCDL	5.0	Code FBC2004/TPI2002		(Matrix)							Weight: 66 lb	

LUMBER
TOP CHORD 2 X 4 SYP No.2
BOT CHORD 2 X 4 SYP No.2
WEBS 2 X 4 SYP No.3

BRACING
TOP CHORD Structural wood sheathing directly applied or 3-8-6 oc purlins.
BOT CHORD Rigid ceiling directly applied or 6-9-9 oc bracing.

REACTIONS (lb/size) 1=1292/0-3-8, 4=1292/0-3-8
Max Horz 1=54(load case 3)
Max Uplift1=-527(load case 4), 4=-527(load case 5)

FORCES (lb) - Maximum Compression/Maximum Tension
TOP CHORD 1-2=-2287/947, 2-3=-1977/918, 3-4=-2292/948
BOT CHORD 1-6=-790/1944, 5-6=-800/1972, 4-5=-753/1948
WEBS 2-6=-264/742, 2-5=-172/192, 3-5=-312/849

NOTES
1) Unbalanced roof live loads have been considered for this design.
2) Wind: ASCE 7-02; 110mph (3-second gust); h=24ft; TCDL=4.2psf; BCDL=3.0psf; Category II; Exp B; enclosed; MWFRS gable end zone; Lumber DOL=1.60 plate grip DOL=1.60.
3) Provide adequate drainage to prevent water ponding.
4) Provide mechanical connection (by others) of truss to bearing plate capable of withstanding 527 lb uplift at joint 1 and 527 lb uplift at joint 4.
5) Girder carries hip end with 7-0-0 end setback.
6) Hanger(s) or other connection device(s) shall be provided sufficient to support concentrated load(s) 539 lb down and 268 lb up at 9-0-0, and 539 lb down and 268 lb up at 7-0-0 on bottom chord. The design/selection of such connection device(s) is the responsibility of others.
7) In the LOAD CASE(S) section, loads applied to the face of the truss are noted as front (F) or back (B).

LOAD CASE(S) Standard
1) Regular: Lumber Increase=1.25, Plate Increase=1.25
Uniform Loads (plf)
Vert: 1-2=-54, 2-3=-118(F=-64), 3-4=-54, 1-6=-30, 5-6=-65(F=-35), 4-5=-30
Concentrated Loads (lb)
Vert: 6=-539(F) 5=-539(F)

NOVEMBER 02, 2006 TRUSS DESIGN ENGINEER:
THOMAS E. MILLER PE 56877, BYRON K. ANDERSON PE 60987
STRUCTURAL ENGINEERING AND INSPECTIONS, INC. EB 9196
16105 N. FLORIDA AVE. STE B, LUTZ, FL 33549

Dwg.#1102061094

Job	Truss	Truss Type	Qty	Ply	LINTON RESIDENCE
L216061	T14	COMMON	1	1	Job Reference (optional)

Builders FirstSource, Lake City, Fl 32055 — 6.300 s Apr 19 2006 MiTek Industries, Inc. Wed Nov 01 16:24:47 2006 Page 1

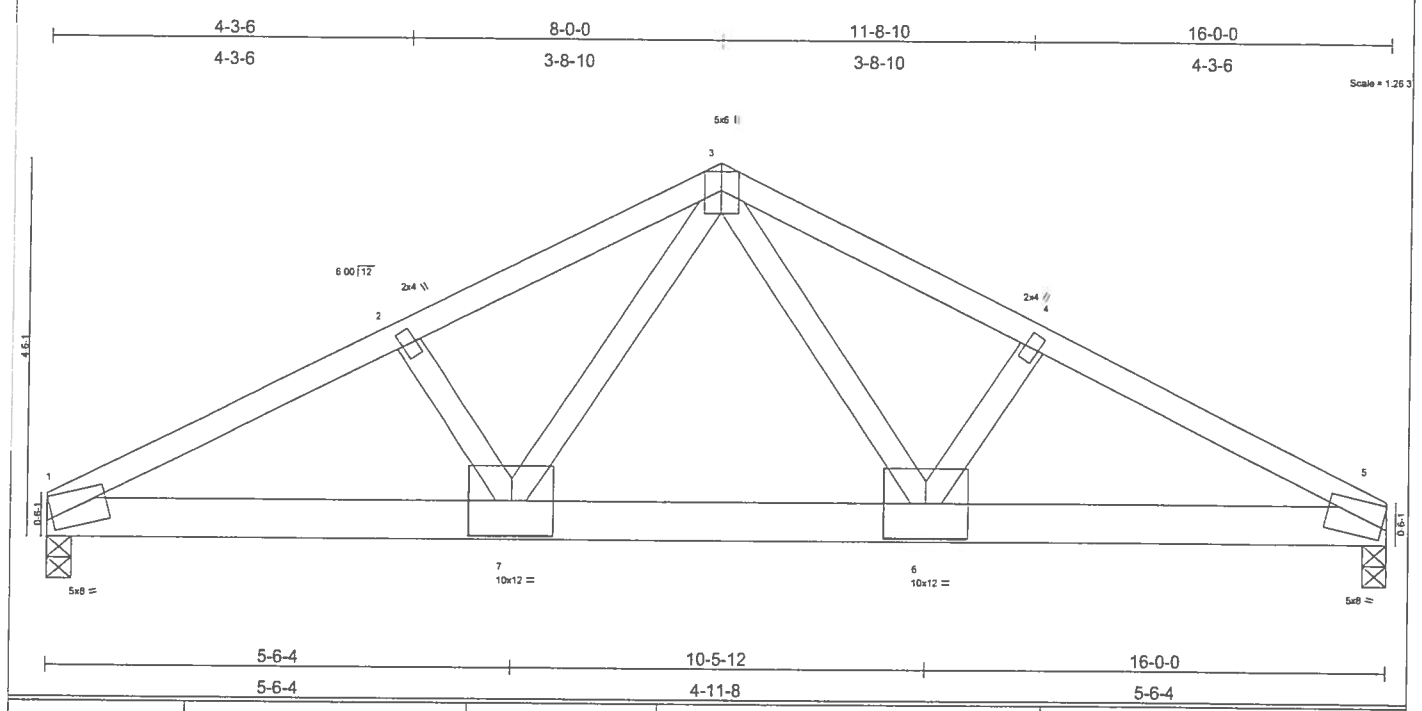

LOADING (psf)		SPACING 2-0-0		CSI		DEFL	in	(loc)	l/defl	L/d	PLATES	GRIP
TCLL	20.0	Plates Increase	1.25	TC	0.52	Vert(LL)	-0.13	6-7	>999	240	MT20	244/190
TCDL	7.0	Lumber Increase	1.25	BC	0.77	Vert(TL)	-0.21	1-7	>903	180		
BCLL	10.0	Rep Stress Incr	NO	WB	0.65	Horz(TL)	0.05	5	n/a	n/a		
BCDL	5.0	Code FBC2004/TPI2002		(Matrix)							Weight: 84 lb	

LUMBER
TOP CHORD 2 X 4 SYP No.2
BOT CHORD 2 X 6 SYP No.1D
WEBS 2 X 4 SYP No.3

BRACING
TOP CHORD Structural wood sheathing directly applied or 2-8-1 oc purlins.
BOT CHORD Rigid ceiling directly applied or 6-10-3 oc bracing.

REACTIONS (lb/size) 1=2811/0-3-8, 5=2811/0-3-8
Max Horz 1=60(load case 3)
Max Uplift1=-1026(load case 4), 5=-1026(load case 5)

FORCES (lb) - Maximum Compression/Maximum Tension
TOP CHORD 1-2=-4251/1550, 2-3=-4153/1556, 3-4=-4153/1557, 4-5=-4251/1550
BOT CHORD 1-7=-1365/3709, 6-7=-900/2635, 5-6=-1308/3709
WEBS 2-7=-79/133, 3-7=-768/2034, 3-6=-769/2034, 4-6=-79/133

NOTES
1) Unbalanced roof live loads have been considered for this design.
2) Wind: ASCE 7-02; 110mph (3-second gust); h=24ft; TCDL=4.2psf; BCDL=3.0psf; Category II; Exp B; enclosed; MWFRS gable end zone; Lumber DOL=1.60 plate grip DOL=1.60.
3) Provide mechanical connection (by others) of truss to bearing plate capable of withstanding 1026 lb uplift at joint 1 and 1026 lb uplift at joint 5.
4) Girder carries tie-in span(s): 15-4-0 from 0-0-0 to 16-0-0
5) In the LOAD CASE(S) section, loads applied to the face of the truss are noted as front (F) or back (B).

LOAD CASE(S) Standard
1) Regular: Lumber Increase=1.25, Plate Increase=1.25
Uniform Loads (plf)
Vert: 1-3=-54, 3-5=-54, 1-5=-304(F=-274)

NOVEMBER 02, 2006 TRUSS DESIGN ENGINEER:
THOMAS E. MILLER PE 56877, BYRON K. ANDERSON PE 60987
STRUCTURAL ENGINEERING AND INSPECTIONS, INC. EB 9196
16105 N. FLORIDA AVE. STE B, LUTZ, FL 33549

Dwg.#1102061095

Job	Truss	Truss Type	Qty	Ply	LINTON RESIDENCE
L216061	T15	MONO HIP	1	1	Job Reference (optional)

Builders FirstSource, Lake City, Fl 32055 — 6.300 s Apr 19 2006 MiTek Industries, Inc. Wed Nov 01 16:26:19 2006 Page 1

-2-0-0	7-0-0	12-11-4	18-8-12	24-8-0
2-0-0	7-0-0	5-11-4	5-9-8	5-11-4

Scale = 1:45.0

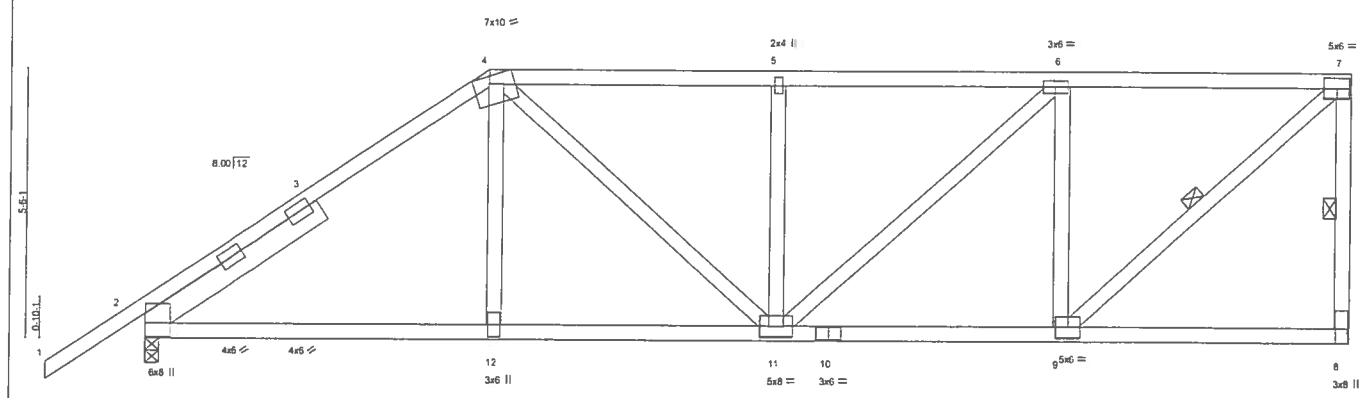

7-0-0	12-11-4	18-8-12	24-8-0
7-0-0	5-11-4	5-9-8	5-11-4

Plate Offsets (X,Y) [2:0-5-9,0-0-3], [4:0-4-0,Edge]

LOADING (psf)		SPACING 2-0-0		CSI		DEFL	in	(loc)	l/defl	L/d	PLATES	GRIP
TCLL	20.0	Plates Increase	1.25	TC	0.95	Vert(LL)	-0.17	11-12	>999	240	MT20	244/190
TCDL	7.0	Lumber Increase	1.25	BC	0.88	Vert(TL)	-0.28	11-12	>999	180		
BCLL	10.0	Rep Stress Incr	NO	WB	0.86	Horz(TL)	0.07	8	n/a	n/a		
BCDL	5.0	Code FBC2004/TPI2002		(Matrix)							Weight: 152 lb	

LUMBER
TOP CHORD 2 X 4 SYP No.1D *Except*
T2 2 X 4 SYP No.2
BOT CHORD 2 X 4 SYP No.2
WEBS 2 X 4 SYP No.3
SLIDER Left 2 X 6 SYP No.1D 4-3-12

BRACING
TOP CHORD Structural wood sheathing directly applied or 2-11-10 oc purlins, except end verticals.
BOT CHORD Rigid ceiling directly applied or 5-8-9 oc bracing.
WEBS 1 Row at midpt 7-8, 7-9

REACTIONS (lb/size) 8=2295/Mechanical, 2=2139/0-3-8
Max Horz 2=294(load case 4)
Max Uplift8=-1211(load case 2), 2=-1010(load case 4)

FORCES (lb) - Maximum Compression/Maximum Tension
TOP CHORD 1-2=0/41, 2-3=-3036/1397, 3-4=-2921/1415, 4-5=-2854/1462, 5-6=-2853/1463, 6-7=-2057/1071, 7-8=-2107/1230
BOT CHORD 2-12=-1199/2359, 11-12=-1206/2382, 10-11=-1071/2057, 9-10=-1071/2057, 8-9=-41/73
WEBS 4-12=-265/809, 4-11=-492/625, 5-11=-735/736, 6-11=-552/1070, 6-9=-1408/1028, 7-9=-1386/2669

NOTES
1) Wind: ASCE 7-02; 110mph (3-second gust); h=24ft; TCDL=4.2psf; BCDL=3.0psf; Category II; Exp B; enclosed; MWFRS gable end zone; Lumber DOL=1.60 plate grip DOL=1.60.
2) Provide adequate drainage to prevent water ponding.
3) Refer to girder(s) for truss to truss connections.
4) Provide mechanical connection (by others) of truss to bearing plate capable of withstanding 1211 lb uplift at joint 8 and 1010 lb uplift at joint 2.
5) Girder carries hip end with 0-0-0 right side setback, 7-0-0 left side setback, and 7-0-0 end setback.
6) Hanger(s) or other connection device(s) shall be provided sufficient to support concentrated load(s) 539 lb down and 332 lb up at 7-0-0 on bottom chord. The design/selection of such connection device(s) is the responsibility of others.
7) In the LOAD CASE(S) section, loads applied to the face of the truss are noted as front (F) or back (B).

LOAD CASE(S) Standard
1) Regular: Lumber Increase=1.25, Plate Increase=1.25
Uniform Loads (plf)
Vert: 1-4=-54, 4-7=-118(F=-64), 2-12=-30, 8-12=-65(F=-35)
Concentrated Loads (lb)
Vert: 12=-539(F)

NOVEMBER 02, 2006 TRUSS DESIGN ENGINEER:
THOMAS E. MILLER PE 56877, BYRON K. ANDERSON PE 60987
STRUCTURAL ENGINEERING AND INSPECTIONS, INC. EB 9196
16105 N. FLORIDA AVE. STE B, LUTZ, FL 33549

Dwg.#1102061096

Job	Truss	Truss Type	Qty	Ply	LINTON RESIDENCE
L216061	T16	MONO HIP	1	1	Job Reference (optional)

Builders FirstSource, Lake City, Fl 32055 — 6.300 s Apr 19 2006 MiTek Industries, Inc. Wed Nov 01 16:26:35 2006 Page 1

-2-0-0	4-7-12	9-0-0	16-10-0	24-8-0
2-0-0	4-7-12	4-4-4	7-10-0	7-10-0

Scale = 1:45.0

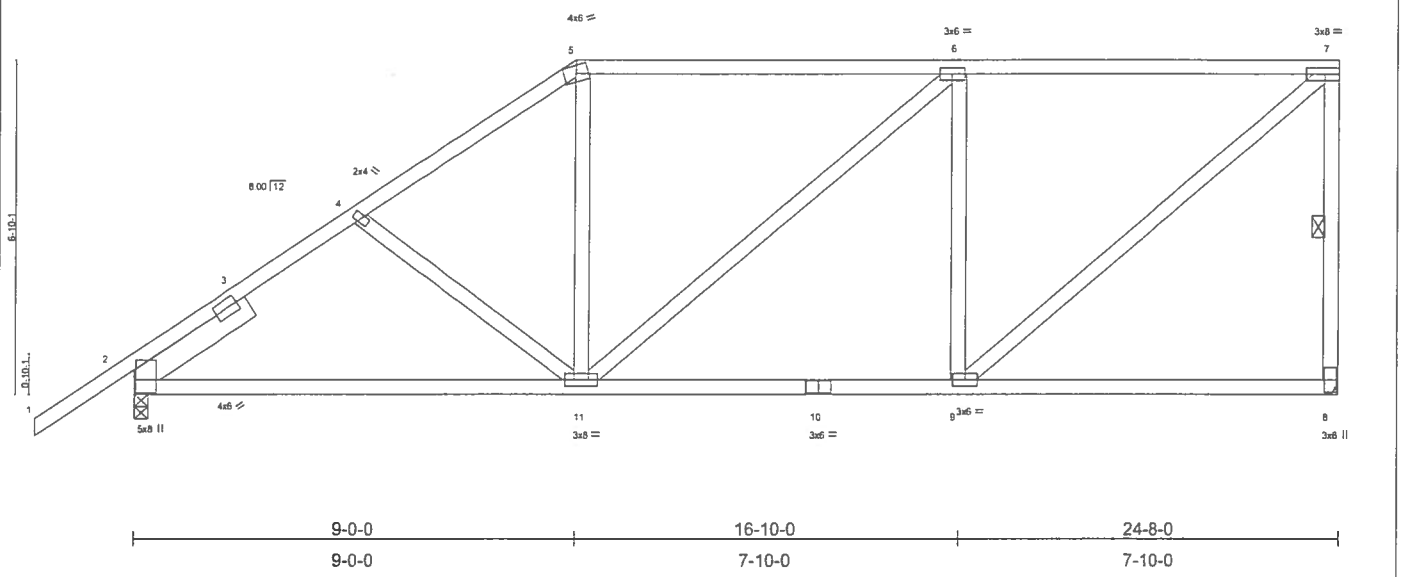

9-0-0	16-10-0	24-8-0
9-0-0	7-10-0	7-10-0

Plate Offsets (X,Y): [2:0-5-9,0-0-7]

LOADING (psf)		SPACING 2-0-0		CSI		DEFL	in	(loc)	l/defl	L/d	PLATES	GRIP
TCLL	20.0	Plates Increase	1.25	TC	0.61	Vert(LL)	-0.11	2-11	>999	240	MT20	244/190
TCDL	7.0	Lumber Increase	1.25	BC	0.48	Vert(TL)	-0.19	2-11	>999	180		
BCLL	10.0	Rep Stress Incr	YES	WB	0.73	Horz(TL)	0.03	8	n/a	n/a		
BCDL	5.0	Code FBC2004/TPI2002		(Matrix)							Weight: 151 lb	

LUMBER
TOP CHORD 2 X 4 SYP No.2
BOT CHORD 2 X 4 SYP No.2
WEBS 2 X 4 SYP No.3
SLIDER Left 2 X 6 SYP No.1D 2-9-14

BRACING
TOP CHORD Structural wood sheathing directly applied or 5-4-9 oc purlins, except end verticals.
BOT CHORD Rigid ceiling directly applied or 9-1-6 oc bracing.
WEBS 1 Row at midpt 7-8

REACTIONS (lb/size) 8=1025/Mechanical, 2=1142/0-3-8
Max Horz 2=354(load case 5)
Max Uplift8=-388(load case 3), 2=-398(load case 5)

FORCES (lb) - Maximum Compression/Maximum Tension
TOP CHORD 1-2=0/41, 2-3=-1353/344, 3-4=-1277/362, 4-5=-1162/341, 5-6=-948/336, 6-7=-894/329, 7-8=-913/404
BOT CHORD 2-11=-480/1019, 10-11=-329/894, 9-10=-329/894, 8-9=-19/42
WEBS 4-11=-137/179, 5-11=0/263, 6-11=-104/144, 6-9=-495/321, 7-9=-412/1118

NOTES
1) Wind: ASCE 7-02; 110mph (3-second gust); h=24ft; TCDL=4.2psf; BCDL=3.0psf; Category II; Exp B; enclosed; MWFRS gable end zone and C-C Interior(1) zone; Lumber DOL=1.60 plate grip DOL=1.60. This truss is designed for C-C for members and forces, and for MWFRS for reactions specified.
2) Provide adequate drainage to prevent water ponding.
3) Refer to girder(s) for truss to truss connections.
4) Provide mechanical connection (by others) of truss to bearing plate capable of withstanding 388 lb uplift at joint 8 and 398 lb uplift at joint 2.

LOAD CASE(S) Standard

NOVEMBER 02, 2006 TRUSS DESIGN ENGINEER:
THOMAS E. MILLER PE 56877, BYRON K. ANDERSON PE 60987
STRUCTURAL ENGINEERING AND INSPECTIONS, INC. EB 9196
16105 N. FLORIDA AVE. STE B, LUTZ, FL 33549

Dwg.#1102061097

Job	Truss	Truss Type	Qty	Ply	LINTON RESIDENCE
L216061	T17	MONO HIP	1	1	Job Reference (optional)

Builders FirstSource, Lake City, Fl 32055 — 6.300 s Apr 19 2006 MiTek Industries, Inc. Wed Nov 01 16:26:55 2006 Page 1

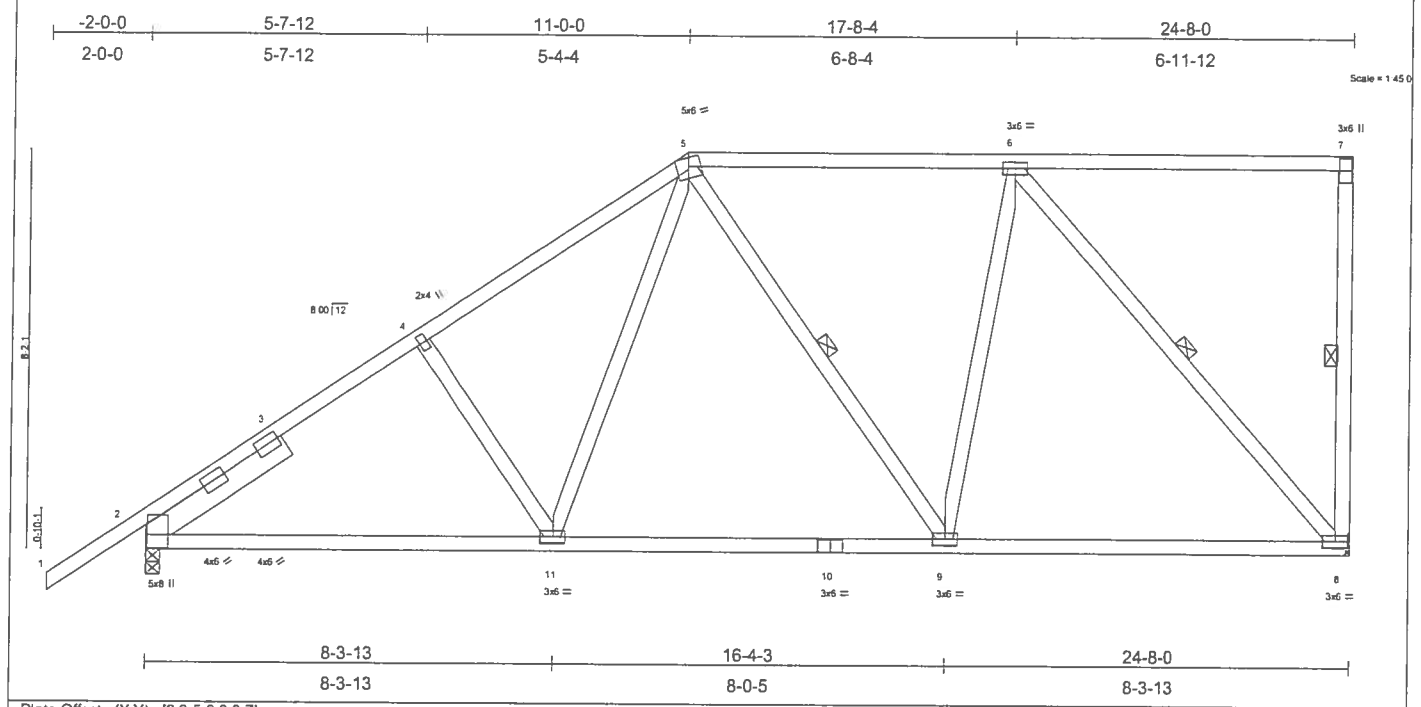

Plate Offsets (X,Y): [2:0-5-9,0-0-7]

LOADING (psf)		SPACING 2-0-0		CSI		DEFL in (loc) l/defl L/d		PLATES GRIP
TCLL	20.0	Plates Increase	1.25	TC	0.45	Vert(LL) -0.09 8-9 >999 240		MT20 244/190
TCDL	7.0	Lumber Increase	1.25	BC	0.42	Vert(TL) -0.16 8-9 >999 180		
BCLL	10.0	Rep Stress Incr	YES	WB	0.51	Horz(TL) 0.03 8 n/a n/a		
BCDL	5.0	Code FBC2004/TPI2002		(Matrix)				Weight: 159 lb

LUMBER
TOP CHORD 2 X 4 SYP No.2
BOT CHORD 2 X 4 SYP No.2
WEBS 2 X 4 SYP No.3
SLIDER Left 2 X 6 SYP No.1D 3-5-2

BRACING
TOP CHORD Structural wood sheathing directly applied or 5-5-5 oc purlins, except end verticals.
BOT CHORD Rigid ceiling directly applied or 8-8-14 oc bracing.
WEBS 1 Row at midpt 7-8, 5-9, 6-8

REACTIONS (lb/size) 8=1025/Mechanical, 2=1142/0-3-8
Max Horz 2=416(load case 5)
Max Uplift8=-372(load case 4), 2=-396(load case 5)

FORCES (lb) - Maximum Compression/Maximum Tension
TOP CHORD 1-2=0/41, 2-3=-1355/327, 3-4=-1278/351, 4-5=-1193/380, 5-6=-734/249, 6-7=-29/9, 7-8=-168/134
BOT CHORD 2-11=-524/1028, 10-11=-333/802, 9-10=-333/802, 8-9=-249/673
WEBS 4-11=-174/249, 5-11=-170/406, 5-9=-122/171, 6-9=-88/360, 6-8=-983/369

NOTES
1) Wind: ASCE 7-02; 110mph (3-second gust); h=24ft; TCDL=4.2psf; BCDL=3.0psf; Category II; Exp B; enclosed; MWFRS gable end zone and C-C Interior(1) zone; Lumber DOL=1.60 plate grip DOL=1.60. This truss is designed for C-C for members and forces, and for MWFRS for reactions specified.
2) Provide adequate drainage to prevent water ponding.
3) Refer to girder(s) for truss to truss connections.
4) Provide mechanical connection (by others) of truss to bearing plate capable of withstanding 372 lb uplift at joint 8 and 396 lb uplift at joint 2.

LOAD CASE(S) Standard

NOVEMBER 02, 2006 TRUSS DESIGN ENGINEER:
THOMAS E. MILLER PE 56877, BYRON K. ANDERSON PE 60987
STRUCTURAL ENGINEERING AND INSPECTIONS, INC. EB 9196
16105 N. FLORIDA AVE. STE B, LUTZ, FL 33549

Dwg.#1102061098

Job	Truss	Truss Type	Qty	Ply	LINTON RESIDENCE
L216061	T18	COMMON	14	1	Job Reference (optional)

Builders FirstSource, Lake City, Fl 32055 — 6.300 s Apr 19 2006 MiTek Industries, Inc. Wed Nov 01 16:27:48 2006 Page 1

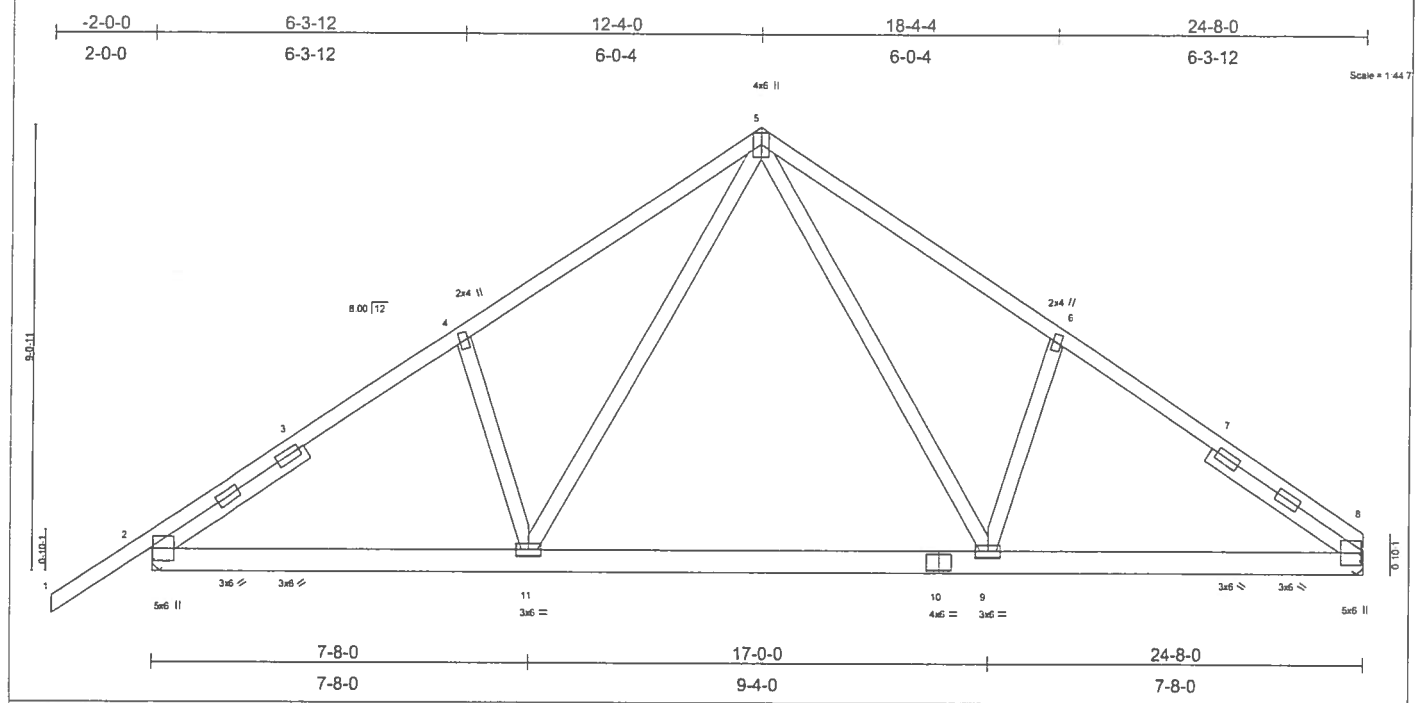

Plate Offsets (X,Y): [2:0-3-5,0-0-6], [8:0-3-5,0-0-6]

LOADING (psf)		SPACING 2-0-0		CSI		DEFL	in	(loc)	l/defl	L/d	PLATES	GRIP
TCLL	20.0	Plates Increase	1.25	TC	0.30	Vert(LL)	-0.17	9-11	>999	240	MT20	244/190
TCDL	7.0	Lumber Increase	1.25	BC	0.41	Vert(TL)	-0.28	9-11	>999	180		
BCLL	10.0	Rep Stress Incr	YES	WB	0.66	Horz(TL)	0.03	8	n/a	n/a		
BCDL	5.0	Code FBC2004/TPI2002		(Matrix)							Weight: 158 lb	

LUMBER
TOP CHORD 2 X 4 SYP No.2
BOT CHORD 2 X 6 SYP No.1D
WEBS 2 X 4 SYP No.3
SLIDER Left 2 X 4 SYP No.3 3-8-13, Right 2 X 4 SYP No.3 3-8-13

BRACING
TOP CHORD Structural wood sheathing directly applied or 4-5-15 oc purlins.
BOT CHORD Rigid ceiling directly applied or 10-0-0 oc bracing.

REACTIONS (lb/size) 8=1265/Mechanical, 2=1382/Mechanical
Max Horz 2=321(load case 4)
Max Uplift8=-413(load case 6), 2=-533(load case 5)

FORCES (lb) - Maximum Compression/Maximum Tension
TOP CHORD 1-2=0/44, 2-3=-1851/557, 3-4=-1749/584, 4-5=-1707/694, 5-6=-1722/719, 6-7=-1761/607, 7-8=-1842/588
BOT CHORD 2-11=-465/1411, 10-11=-211/973, 9-10=-211/973, 8-9=-376/1425
WEBS 4-11=-218/283, 5-11=-362/837, 5-9=-392/860, 6-9=-226/293

NOTES
1) Unbalanced roof live loads have been considered for this design.
2) Wind: ASCE 7-02; 110mph (3-second gust); h=24ft; TCDL=4.2psf; BCDL=3.0psf; Category II; Exp B; enclosed; MWFRS gable end zone and C-C Interior(1) zone; Lumber DOL=1.60 plate grip DOL=1.60. This truss is designed for C-C for members and forces, and for MWFRS for reactions specified.
3) Refer to girder(s) for truss to truss connections.
4) Provide mechanical connection (by others) of truss to bearing plate capable of withstanding 413 lb uplift at joint 8 and 533 lb uplift at joint 2.
5) In the LOAD CASE(S) section, loads applied to the face of the truss are noted as front (F) or back (B).

LOAD CASE(S) Standard
1) Regular: Lumber Increase=1.25, Plate Increase=1.25
Uniform Loads (plf)
Vert: 1-5=-54, 5-8=-54, 2-11=-30, 9-11=-80(F=-50), 8-9=-30

NOVEMBER 02, 2006 TRUSS DESIGN ENGINEER:
THOMAS E. MILLER PE 56877, BYRON K. ANDERSON PE 60987
STRUCTURAL ENGINEERING AND INSPECTIONS, INC. EB 9196
16105 N. FLORIDA AVE. STE B, LUTZ, FL 33549

Dwg.#1102061099

Job	Truss	Truss Type	Qty	Ply	LINTON RESIDENCE
L216061	T19	COMMON	1	2	Job Reference (optional)

Builders FirstSource, Lake City, Fl 32055 — 6.300 s Apr 19 2006 MiTek Industries, Inc. Wed Nov 01 16:35:05 2006 Page 1

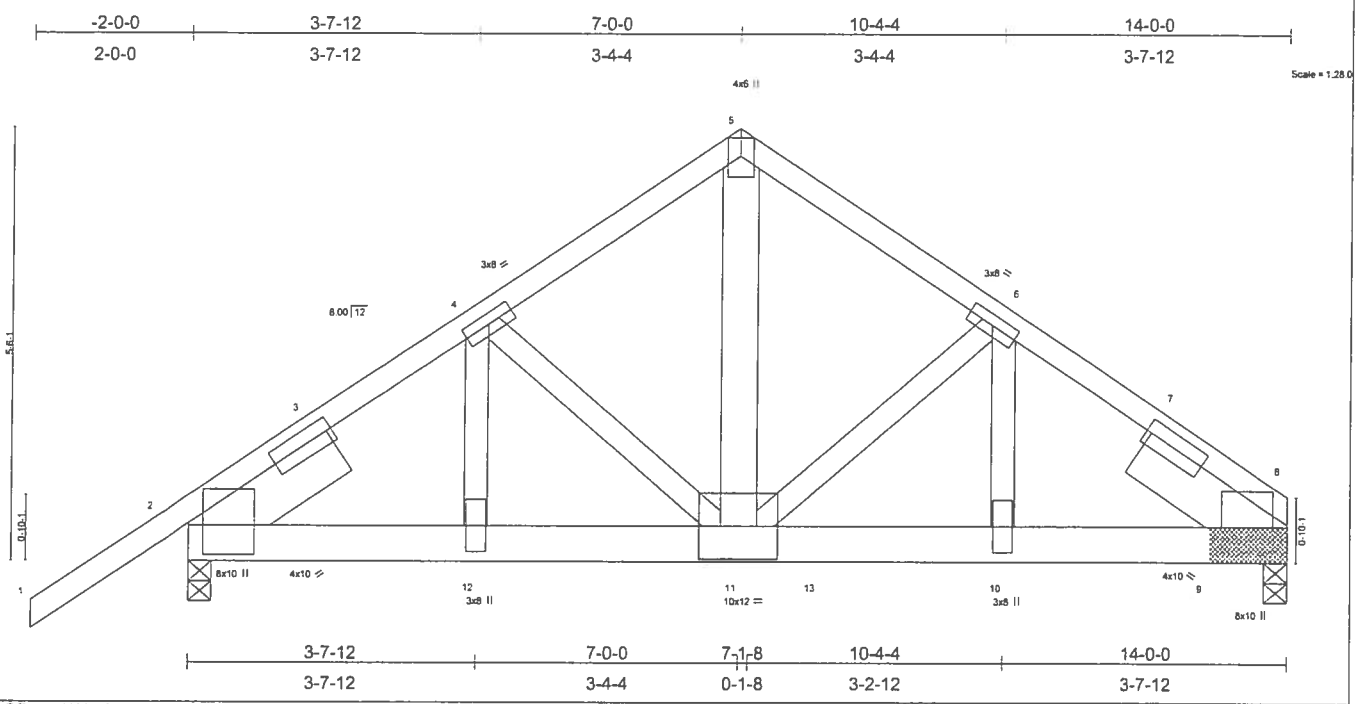

Plate Offsets (X,Y): [2:0-4-13,0-2-2], [8:0-4-13,0-2-2]

LOADING (psf)		SPACING 2-0-0		CSI		DEFL	in	(loc)	l/defl	L/d	PLATES	GRIP
TCLL	20.0	Plates Increase	1.25	TC	0.77	Vert(LL)	-0.07	10-11	>999	240	MT20	244/190
TCDL	7.0	Lumber Increase	1.25	BC	0.65	Vert(TL)	-0.12	10-11	>999	180		
BCLL	10.0	Rep Stress Incr	NO	WB	0.43	Horz(TL)	0.03	8	n/a	n/a		
BCDL	5.0	Code FBC2004/TPI2002		(Matrix)							Weight: 220 lb	

LUMBER
TOP CHORD 2 X 4 SYP No.2
BOT CHORD 2 X 6 SYP No.1D
WEBS 2 X 4 SYP No.3 *Except*
W3 2 X 6 SYP No.1D
SLIDER Left 2 X 8 SYP No.1D 2-1-7, Right 2 X 8 SYP No.1D 2-1-7

BRACING
TOP CHORD Structural wood sheathing directly applied or 3-7-7 oc purlins.
BOT CHORD Rigid ceiling directly applied or 10-0-0 oc bracing.

REACTIONS (lb/size) 8=6469/0-3-13 (0-3-8 + bearing block), 2=3733/0-3-8
Max Horz 2=198(load case 3)
Max Uplift8=-2459(load case 5), 2=-1466(load case 4)

FORCES (lb) - Maximum Compression/Maximum Tension
TOP CHORD 1-2=0/44, 2-3=-5276/1947, 3-4=-5227/1960, 4-5=-5577/2155, 5-6=-5570/2142, 6-7=-7637/2915, 7-8=-7662/2884
BOT CHORD 2-12=-1528/4160, 11-12=-1528/4160, 11-13=-2270/6144, 10-13=-2270/6144, 9-10=-2270/6144, 8-9=-2270/6144
WEBS 4-12=-415/225, 4-11=-309/740, 5-11=-2200/5756, 6-11=-1976/897, 6-10=-1050/2667

NOTES
1) 2-ply truss to be connected together with 10d (0.131"x3") nails as follows:
Top chords connected as follows: 2 X 4 - 1 row at 0-9-0 oc.
Bottom chords connected as follows: 2 X 6 - 2 rows at 0-7-0 oc.
Webs connected as follows: 2 X 4 - 1 row at 0-9-0 oc, 2 X 6 - 2 rows at 0-9-0 oc.
2) All loads are considered equally applied to all plies, except if noted as front (F) or back (B) face in the LOAD CASE(S) section. Ply to ply connections have been provided to distribute only loads noted as (F) or (B), unless otherwise indicated.
3) 2 X 6 SYP No.1D bearing block 12" long at jt. 8 attached to each face with 3 rows of 10d (0.131"x3") nails spaced 3" o.c. 12 Total fasteners per block. Bearing is assumed to be SYP.
4) Unbalanced roof live loads have been considered for this design.
5) Wind: ASCE 7-02; 110mph (3-second gust); h=24ft; TCDL=4.2psf; BCDL=3.0psf; Category II; Exp B; enclosed; MWFRS gable end zone; Lumber DOL=1.60 plate grip DOL=1.60.
6) Provide mechanical connection (by others) of truss to bearing plate capable of withstanding 2459 lb uplift at joint 8 and 1466 lb uplift at joint 2.
7) Girder carries tie-in span(s): 42-0-0 from 8-0-0 to 14-0-0
8) Hanger(s) or other connection device(s) shall be provided sufficient to support concentrated load(s) 3915 lb down and 1478 lb up at 7-1-8 on bottom chord. The design/selection of such connection device(s) is the responsibility of others.

LOAD CASE(S) Standard
1) Regular: Lumber Increase=1.25, Plate Increase=1.25
Uniform Loads (plf)
Vert: 1-5=-54, 5-8=-54, 2-13=-30, 8-13=-864(F=-834)
Concentrated Loads (lb)
Vert: 11=-3915(F)

NOVEMBER 02, 2006 TRUSS DESIGN ENGINEER:
THOMAS E. MILLER PE 56877, BYRON K. ANDERSON PE 60987
STRUCTURAL ENGINEERING AND INSPECTIONS, INC. EB 9196
16105 N. FLORIDA AVE. STE B, LUTZ, FL 33549

Dwg.#1102061100

Job	Truss	Truss Type	Qty	Ply	LINTON RESIDENCE
L216061	T19G	GABLE	1	1	Job Reference (optional)

Builders FirstSource, Lake City, Fl 32055

6.300 s Apr 19 2006 MiTek Industries, Inc. Wed Nov 01 16:35:24 2006 Page 1

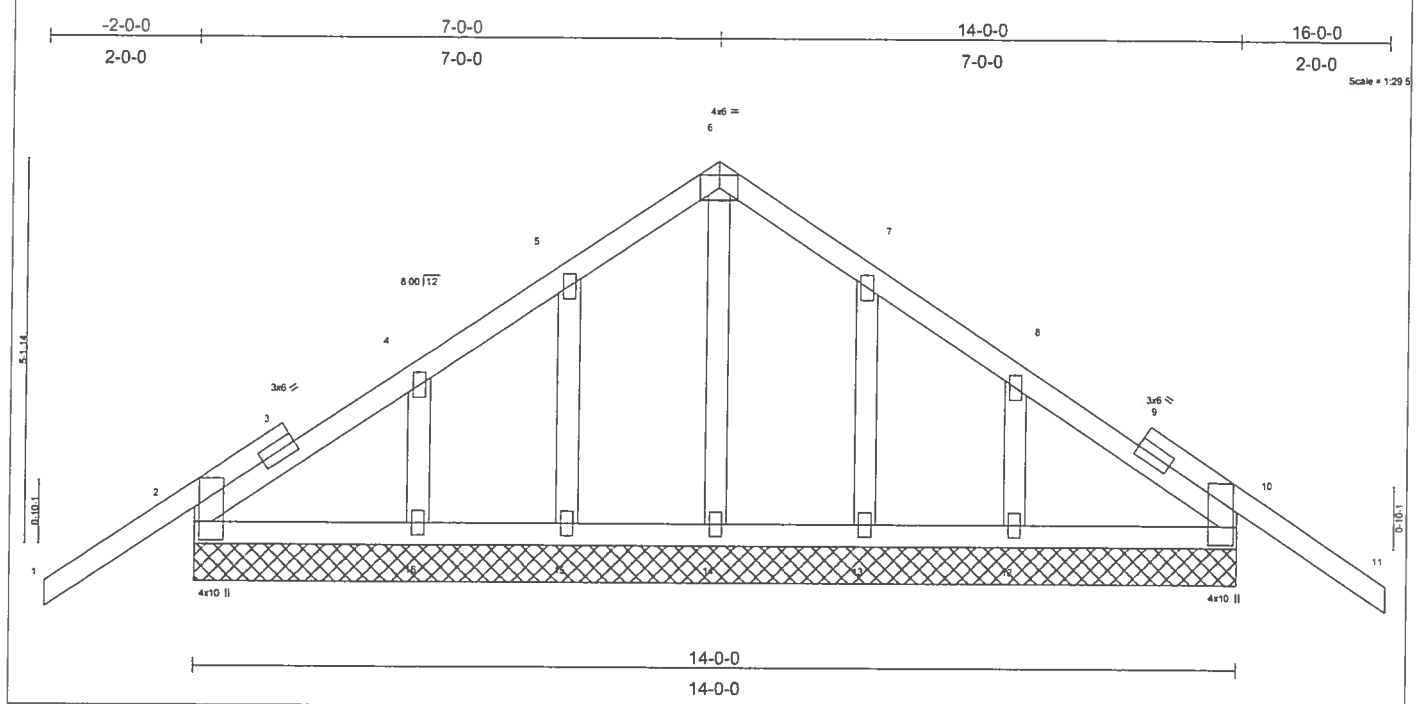

Plate Offsets (X,Y): [2:0-3-0,0-0-10], [10:0-3-0,0-1-14]

LOADING (psf)		SPACING 2-0-0		CSI		DEFL	in	(loc)	l/defl	L/d	PLATES	GRIP
TCLL	20.0	Plates Increase	1.25	TC	0.38	Vert(LL)	-0.03	11	n/r	120	MT20	244/190
TCDL	7.0	Lumber Increase	1.25	BC	0.06	Vert(TL)	-0.05	11	n/r	90		
BCLL	10.0	Rep Stress Incr	NO	WB	0.06	Horz(TL)	0.00	10	n/a	n/a		
BCDL	5.0	Code FBC2004/TPI2002		(Matrix)							Weight: 80 lb	

LUMBER
TOP CHORD 2 X 4 SYP No.2
BOT CHORD 2 X 4 SYP No.2
OTHERS 2 X 4 SYP No.3

BRACING
TOP CHORD Structural wood sheathing directly applied or 6-0-0 oc purlins.
BOT CHORD Rigid ceiling directly applied or 10-0-0 oc bracing.

REACTIONS (lb/size) 2=415/14-0-0, 10=415/14-0-0, 14=196/14-0-0, 15=228/14-0-0, 16=252/14-0-0, 13=228/14-0-0, 12=252/14-0-0
Max Horz 2=172(load case 4)
Max Uplift2=-211(load case 5), 10=-233(load case 6), 15=-132(load case 5), 16=-116(load case 5), 13=-131(load case 6), 12=-114(load case 6)
Max Grav 2=415(load case 1), 10=415(load case 1), 14=196(load case 1), 15=232(load case 9), 16=252(load case 1), 13=232(load case 10), 12=252(load case 1)

FORCES (lb) - Maximum Compression/Maximum Tension
TOP CHORD 1-2=-3/66, 2-3=-141/110, 3-4=-112/112, 4-5=-87/105, 5-6=-85/149, 6-7=-85/140, 7-8=-87/69, 8-9=-48/48, 9-10=-141/46, 10-11=-3/66
BOT CHORD 2-16=-22/128, 15-16=-22/128, 14-15=-22/128, 13-14=-22/128, 12-13=-22/128, 10-12=-22/128
WEBS 6-14=-135/12, 5-15=-175/138, 4-16=-183/143, 7-13=-175/137, 8-12=-183/141

NOTES
1) Unbalanced roof live loads have been considered for this design.
2) Wind: ASCE 7-02; 110mph (3-second gust); h=24ft; TCDL=4.2psf; BCDL=3.0psf; Category II; Exp B; enclosed; MWFRS gable end zone and C-C Interior(1) zone; Lumber DOL=1.60 plate grip DOL=1.60. This truss is designed for C-C for members and forces, and for MWFRS for reactions specified.
3) Truss designed for wind loads in the plane of the truss only. For studs exposed to wind (normal to the face), see MiTek "Standard Gable End Detail"
4) All plates are 2x4 MT20 unless otherwise indicated.
5) Gable requires continuous bottom chord bearing.
6) Gable studs spaced at 2-0-0 oc.
7) Provide mechanical connection (by others) of truss to bearing plate capable of withstanding 211 lb uplift at joint 2, 233 lb uplift at joint 10, 132 lb uplift at joint 15, 116 lb uplift at joint 16, 131 lb uplift at joint 13 and 114 lb uplift at joint 12.

LOAD CASE(S) Standard
1) Regular: Lumber Increase=1.25, Plate Increase=1.25
Uniform Loads (plf)
Vert: 1-6=-87, 6-11=-87, 2-10=-30

NOVEMBER 02, 2006 TRUSS DESIGN ENGINEER:
THOMAS E. MILLER PE 56877, BYRON K. ANDERSON PE 60987
STRUCTURAL ENGINEERING AND INSPECTIONS, INC. EB 9196
16105 N. FLORIDA AVE. STE B, LUTZ, FL 33549

Dwg.#1102061101

Job	Truss	Truss Type	Qty	Ply	LINTON RESIDENCE
L216061	T20	COMMON	2	1	Job Reference (optional)

Builders FirstSource, Lake City, Fl 32055

6.300 s Apr 19 2006 MiTek Industries, Inc. Wed Nov 01 16:35:46 2006 Page 1

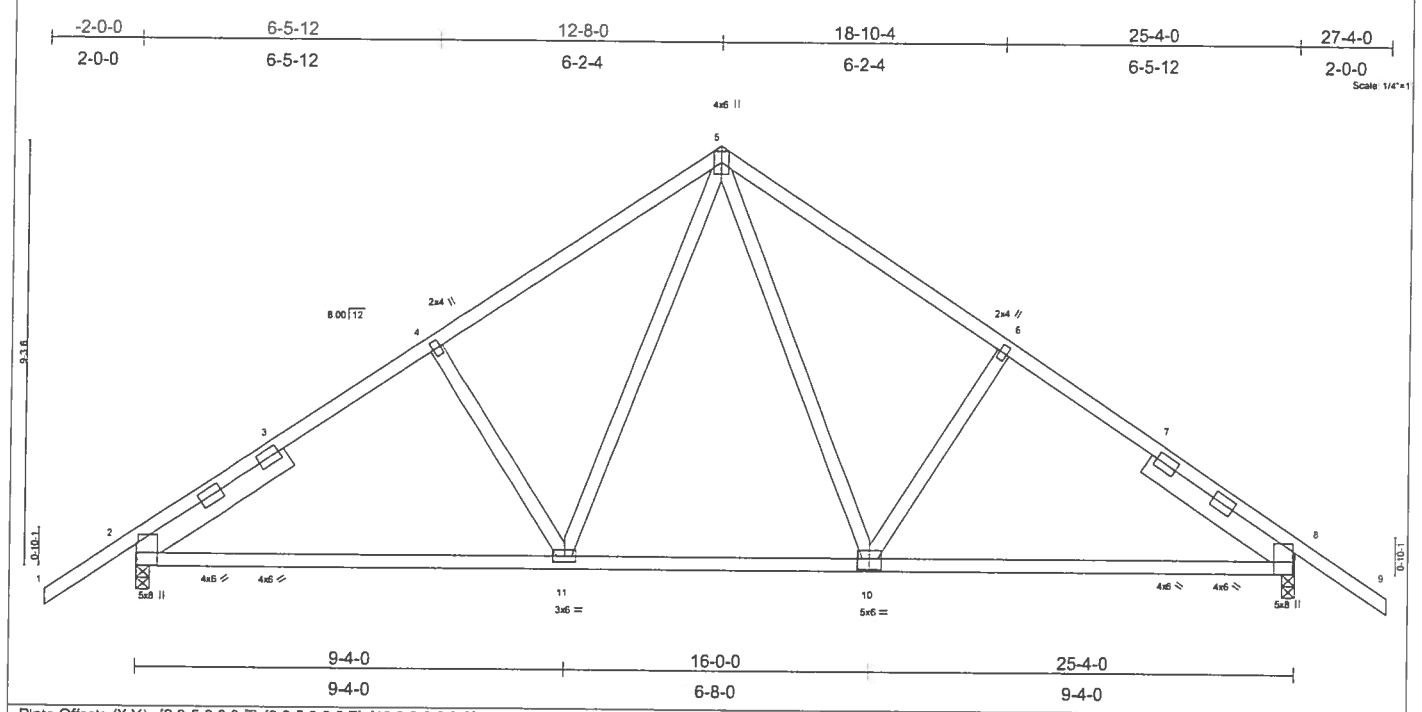

Plate Offsets (X,Y): [2:0-5-9,0-0-7], [8:0-5-9,0-0-7], [10:0-3-0,0-3-0]

LOADING (psf)		SPACING 2-0-0		CSI		DEFL	in	(loc)	l/defl	L/d	PLATES	GRIP
TCLL	20.0	Plates Increase	1.25	TC	0.29	Vert(LL)	-0.14	2-11	>999	240	MT20	244/190
TCDL	7.0	Lumber Increase	1.25	BC	0.49	Vert(TL)	-0.24	2-11	>999	180		
BCLL	10.0	Rep Stress Incr	YES	WB	0.35	Horz(TL)	0.04	8	n/a	n/a		
BCDL	5.0	Code FBC2004/TPI2002		(Matrix)							Weight: 152 lb	

LUMBER
TOP CHORD 2 X 4 SYP No.2
BOT CHORD 2 X 4 SYP No.2
WEBS 2 X 4 SYP No.3
SLIDER Left 2 X 6 SYP No.1D 3-11-2, Right 2 X 6 SYP No.1D 3-11-2

BRACING
TOP CHORD Structural wood sheathing directly applied or 5-6-11 oc purlins.
BOT CHORD Rigid ceiling directly applied or 10-0-0 oc bracing.

REACTIONS (lb/size) 2=1172/0-3-8, 8=1172/0-3-8
Max Horz 2=-315(load case 3)
Max Uplift2=-451(load case 5), 8=-451(load case 6)

FORCES (lb) - Maximum Compression/Maximum Tension
TOP CHORD 1-2=0/41, 2-3=-1369/408, 3-4=-1207/437, 4-5=-1196/477, 5-6=-1196/477, 6-7=-1207/437, 7-8=-1368/408, 8-9=0/41
BOT CHORD 2-11=-324/1046, 10-11=-98/761, 8-10=-225/1046
WEBS 4-11=-266/289, 5-11=-215/489, 5-10=-215/489, 6-10=-266/289

NOTES
1) Unbalanced roof live loads have been considered for this design.
2) Wind: ASCE 7-02; 110mph (3-second gust); h=24ft; TCDL=4.2psf; BCDL=3.0psf; Category II; Exp B; enclosed; MWFRS gable end zone and C-C Interior(1) zone; Lumber DOL=1.60 plate grip DOL=1.60. This truss is designed for C-C for members and forces, and for MWFRS for reactions specified.
3) Provide mechanical connection (by others) of truss to bearing plate capable of withstanding 451 lb uplift at joint 2 and 451 lb uplift at joint 8.

LOAD CASE(S) Standard

NOVEMBER 02, 2006 TRUSS DESIGN ENGINEER:
THOMAS E. MILLER PE 56877, BYRON K. ANDERSON PE 60987
STRUCTURAL ENGINEERING AND INSPECTIONS, INC. EB 9196
16105 N. FLORIDA AVE. STE B, LUTZ, FL 33549

Dwg.#1102061102

Job	Truss	Truss Type	Qty	Ply	LINTON RESIDENCE
L216061	T20G	GABLE	1	1	Job Reference (optional)

Builders FirstSource, Lake City, Fl 32055 — 6.300 s Apr 19 2006 MiTek Industries, Inc. Wed Nov 01 16:36:08 2006 Page 1

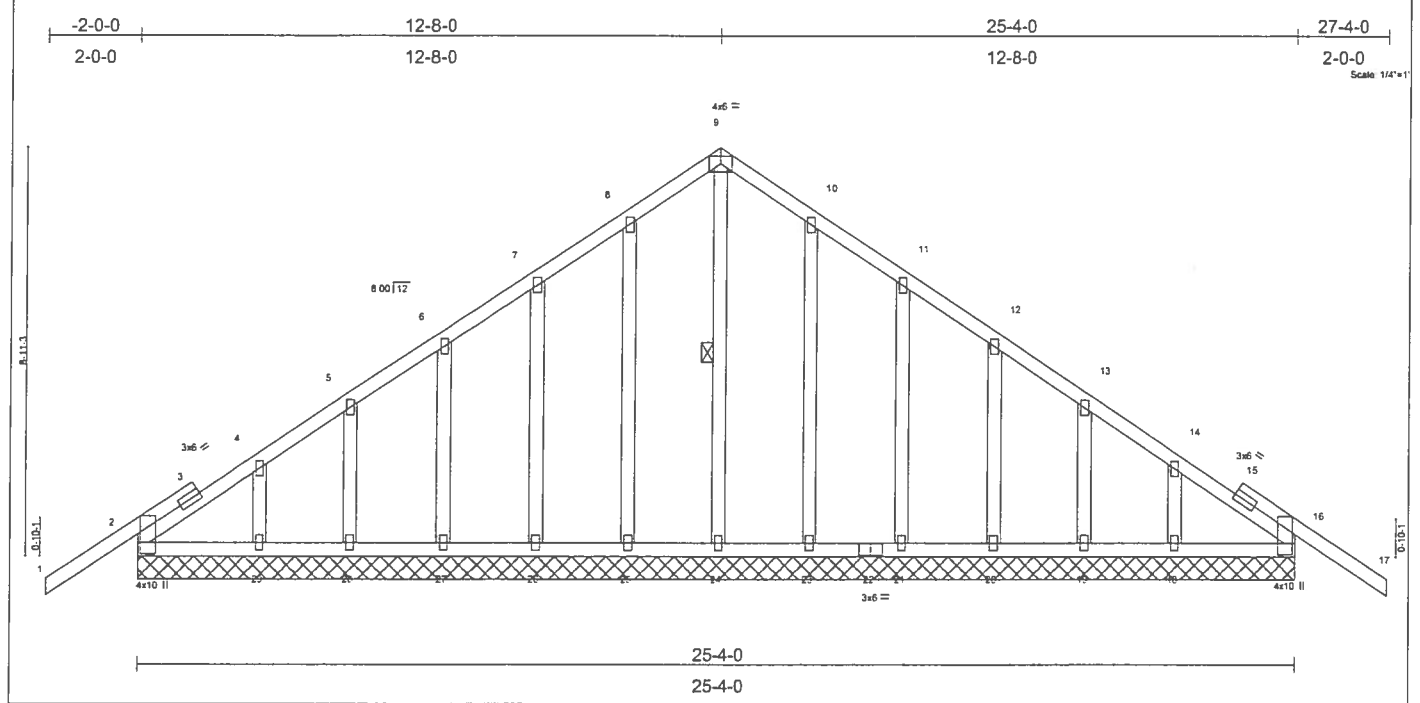

Plate Offsets (X,Y): [2:0-3-0,0-0-10], [16:0-3-0,0-1-14]

LOADING (psf)		SPACING 2-0-0		CSI		DEFL	in	(loc)	l/defl	L/d	PLATES	GRIP
TCLL	20.0	Plates Increase	1.25	TC	0.38	Vert(LL)	-0.03	17	n/r	120	MT20	244/190
TCDL	7.0	Lumber Increase	1.25	BC	0.06	Vert(TL)	-0.05	17	n/r	90		
BCLL	10.0	Rep Stress Incr	NO	WB	0.17	Horz(TL)	0.01	16	n/a	n/a		
BCDL	5.0	Code FBC2004/TPI2002		(Matrix)							Weight: 173 lb	

LUMBER
TOP CHORD 2 X 4 SYP No.2
BOT CHORD 2 X 4 SYP No.2
OTHERS 2 X 4 SYP No.3

BRACING
TOP CHORD Structural wood sheathing directly applied or 6-0-0 oc purlins.
BOT CHORD Rigid ceiling directly applied or 10-0-0 oc bracing.
WEBS 1 Row at midpt 9-24

REACTIONS (lb/size) 2=403/25-4-0, 16=403/25-4-0, 24=201/25-4-0, 25=233/25-4-0, 26=235/25-4-0, 27=232/25-4-0, 28=240/25-4-0, 29=213/25-4-0, 23=233/25-4-0, 21=235/25-4-0, 20=232/25-4-0, 19=240/25-4-0, 18=213/25-4-0
Max Horz 2=-303(load case 3)
Max Uplift 2=-146(load case 3), 16=-167(load case 6), 25=-115(load case 5), 26=-136(load case 5), 27=-126(load case 5), 28=-139(load case 5), 29=-101(load case 5), 23=-111(load case 6), 21=-137(load case 6), 20=-125(load case 6), 19=-140(load case 6), 18=-96(load case 6)
Max Grav 2=403(load case 1), 16=403(load case 1), 24=201(load case 1), 25=237(load case 9), 26=235(load case 1), 27=233(load case 9), 28=240(load case 1), 29=213(load case 9), 23=237(load case 10), 21=235(load case 1), 20=233(load case 10), 19=240(load case 1), 18=213(load case 10)

FORCES (lb) - Maximum Compression/Maximum Tension
TOP CHORD 1-2=-3/66, 2-3=-250/191, 3-4=-248/192, 4-5=-189/168, 5-6=-142/166, 6-7=-92/158, 7-8=-80/212, 8-9=-79/251, 9-10=-79/242, 10-11=-80/178, 11-12=-79/101, 12-13=-80/56, 13-14=-80/58, 14-15=-135/79, 15-16=-136/77, 16-17=-3/66
BOT CHORD 2-29=-46/214, 28-29=-46/214, 27-28=-46/214, 26-27=-46/214, 25-26=-46/214, 24-25=-46/214, 23-24=-46/214, 22-23=-46/214, 21-22=-46/214, 20-21=-46/214, 19-20=-46/214, 18-19=-46/214, 16-18=-46/214
WEBS 9-24=-165/2, 8-25=-177/127, 7-26=-175/147, 6-27=-173/139, 5-28=-179/145, 4-29=-156/128, 10-23=-177/123, 11-21=-175/149, 12-20=-173/139, 13-19=-179/146, 14-18=-156/125

NOTES
1) Unbalanced roof live loads have been considered for this design.
2) Wind: ASCE 7-02; 110mph (3-second gust); h=24ft; TCDL=4.2psf; BCDL=3.0psf; Category II; Exp B; enclosed; MWFRS gable end zone and C-C Interior(1) zone; Lumber DOL=1.60 plate grip DOL=1.60. This truss is designed for C-C for members and forces, and for MWFRS for reactions specified.
3) Truss designed for wind loads in the plane of the truss only. For studs exposed to wind (normal to the face), see MiTek "Standard Gable End Detail"
4) All plates are 2x4 MT20 unless otherwise indicated.
5) Gable requires continuous bottom chord bearing.
6) Gable studs spaced at 2-0-0 oc.
7) Provide mechanical connection (by others) of truss to bearing plate capable of withstanding 146 lb uplift at joint 2, 167 lb uplift at joint 16, 115 lb uplift at joint 25, 136 lb uplift at joint 26, 126 lb uplift at joint 27, 139 lb uplift at joint 28, 101 lb uplift at joint 29, 111 lb uplift at joint 23, 137 lb uplift at joint 21, 125 lb uplift at joint 20, 140 lb uplift at joint 19 and 96 lb uplift at joint 18.

LOAD CASE(S) Standard
1) Regular: Lumber Increase=1.25, Plate Increase=1.25
Uniform Loads (plf)
Vert: 1-9=-87, 9-17=-87, 2-16=-30

NOVEMBER 02, 2006 TRUSS DESIGN ENGINEER:
THOMAS E. MILLER PE 56877, BYRON K. ANDERSON PE 60987
STRUCTURAL ENGINEERING AND INSPECTIONS, INC. EB 9196
16105 N. FLORIDA AVE. STE B, LUTZ, FL 33549

Dwg.#110206l103

Job	Truss	Truss Type	Qty	Ply	LINTON RESIDENCE
L216061	T21	COMMON	1	2	Job Reference (optional)

Builders FirstSource, Lake City, Fl 32055

6.300 s Apr 19 2006 MiTek Industries, Inc. Wed Nov 01 16:40:06 2006 Page 1

-2-0-0	3-7-7	7-0-12	9-10-6	12-8-0	15-5-10	18-3-4	21-8-9	25-4-0
2-0-0	3-7-7	3-5-5	2-9-10	2-9-10	2-9-10	2-9-10	3-5-5	3-7-7

Scale = 1:45.8

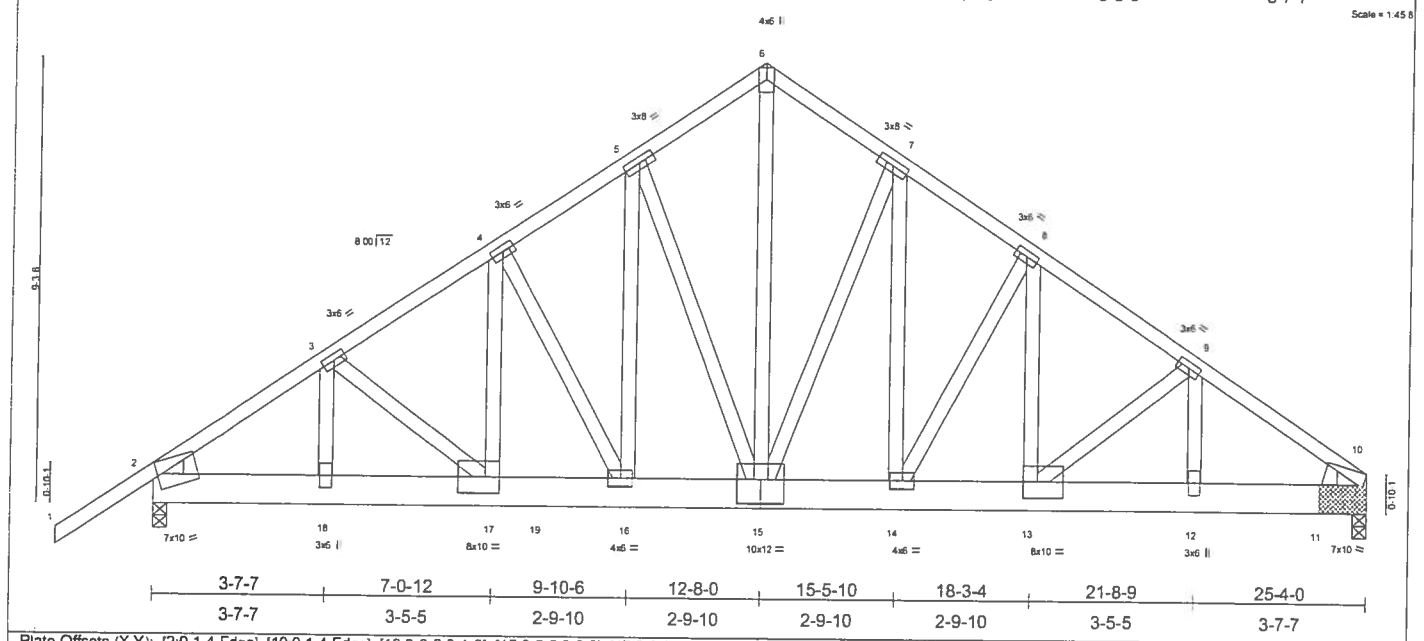

3-7-7	7-0-12	9-10-6	12-8-0	15-5-10	18-3-4	21-8-9	25-4-0
3-7-7	3-5-5	2-9-10	2-9-10	2-9-10	2-9-10	3-5-5	3-7-7

Plate Offsets (X,Y): [2:0-1-4,Edge], [10:0-1-4,Edge], [13:0-3-8,0-4-0], [15:0-6-0,0-6-0], [17:0-3-8,0-4-0]

LOADING (psf)		SPACING 2-0-0		CSI		DEFL	in	(loc)	l/defl	L/d	PLATES	GRIP
TCLL	20.0	Plates Increase	1.25	TC	0.55	Vert(LL)	-0.16	14	>999	240	MT20	244/190
TCDL	7.0	Lumber Increase	1.25	BC	0.65	Vert(TL)	-0.25	14	>999	180		
BCLL	10.0	Rep Stress Incr	NO	WB	0.63	Horz(TL)	0.06	10	n/a	n/a		
BCDL	5.0	Code FBC2004/TPI2002		(Matrix)							Weight: 473 lb	

LUMBER
TOP CHORD 2 X 4 SYP No.2
BOT CHORD 2 X 8 SYP No.1D
WEBS 2 X 4 SYP No.3 *Except*
W7 2 X 4 SYP No.2
WEDGE
Left: 2 X 4 SYP No.3, Right: 2 X 4 SYP No.3

BRACING
TOP CHORD Structural wood sheathing directly applied or 4-1-10 oc purlins.
BOT CHORD Rigid ceiling directly applied or 10-0-0 oc bracing.

REACTIONS (lb/size) 10=6985/0-4-2 (0-3-8 + bearing block), 2=5605/0-3-8
Max Horz 2=328(load case 3)
Max Uplift10=-2646(load case 5), 2=-2171(load case 4)

FORCES (lb) - Maximum Compression/Maximum Tension
TOP CHORD 1-2=0/48, 2-3=-8316/3059, 3-4=-8451/3202, 4-5=-7285/2831, 5-6=-6171/2473, 6-7=-6170/2465, 7-8=-7230/2821, 8-9=-8386/3217, 9-10=-9575/3620
BOT CHORD 2-18=-2431/6451, 17-18=-2431/6451, 17-19=-2600/7000, 16-19=-2600/7000, 15-16=-2182/6008, 14-15=-2133/5961, 13-14=-2522/6947, 12-13=-2760/7452, 11-12=-2760/7452, 10-11=-2760/7452
WEBS 3-18=-134/140, 3-17=-329/751, 4-17=-835/2252, 4-16=-2056/863, 5-16=-1049/2705, 5-15=-2305/976, 6-15=-2577/6485, 7-15=-2180/956, 7-14=-1026/2561, 8-14=-2043/891, 8-13=-868/2231, 9-13=-673/348, 9-12=-572/1542

NOTES
1) 2-ply truss to be connected together with 10d (0.131"x3") nails as follows:
Top chords connected as follows: 2 X 4 - 1 row at 0-9-0 oc.
Bottom chords connected as follows: 2 X 8 - 2 rows at 0-9-0 oc.
Webs connected as follows: 2 X 4 - 1 row at 0-9-0 oc.
2) All loads are considered equally applied to all plies, except if noted as front (F) or back (B) face in the LOAD CASE(S) section. Ply to ply connections have been provided to distribute only loads noted as (F) or (B), unless otherwise indicated.
3) 2 X 8 SYP No.1D bearing block 12" long at jt. 10 attached to each face with 4 rows of 10d (0.131"x3") nails spaced 3" o.c. 16 Total fasteners per block. Bearing is assumed to be SYP.
4) Unbalanced roof live loads have been considered for this design.
5) Wind: ASCE 7-02; 110mph (3-second gust); h=24ft; TCDL=4.2psf; BCDL=3.0psf; Category II; Exp B; enclosed; MWFRS gable end zone; Lumber DOL=1.60 plate grip DOL=1.60.
6) Provide mechanical connection (by others) of truss to bearing plate capable of withstanding 2646 lb uplift at joint 10 and 2171 lb uplift at joint 2.
7) Girder carries tie-in span(s): 24-8-0 from 8-0-0 to 25-4-0
8) Hanger(s) or other connection device(s) shall be provided sufficient to support concentrated load(s) 2295 lb down and 867 lb up at 7-0-12 on bottom chord. The design/selection of such connection device(s) is the responsibility of others.

LOAD CASE(S) Standard
1) Regular: Lumber Increase=1.25, Plate Increase=1.25
Uniform Loads (plf)
Vert: 1-6=-54, 6-10=-54, 2-19=-30, 10-19=-500(F=-470)
Concentrated Loads (lb)
Vert: 17=-2295(F)

NOVEMBER 02, 2006 TRUSS DESIGN ENGINEER:
THOMAS E. MILLER PE 56877, BYRON K. ANDERSON PE 60987
STRUCTURAL ENGINEERING AND INSPECTIONS, INC. EB 9196
16105 N. FLORIDA AVE. STE B, LUTZ, FL 33549

Dwg.#110206l 104

Job	Truss	Truss Type	Qty	Ply	LINTON RESIDENCE
L216061	T22	MONO HIP	1	2	Job Reference (optional)

Builders FirstSource, Lake City, Fl 32055 — 6.300 s Apr 19 2006 MiTek Industries, Inc. Wed Nov 01 16:41:02 2006 Page 1

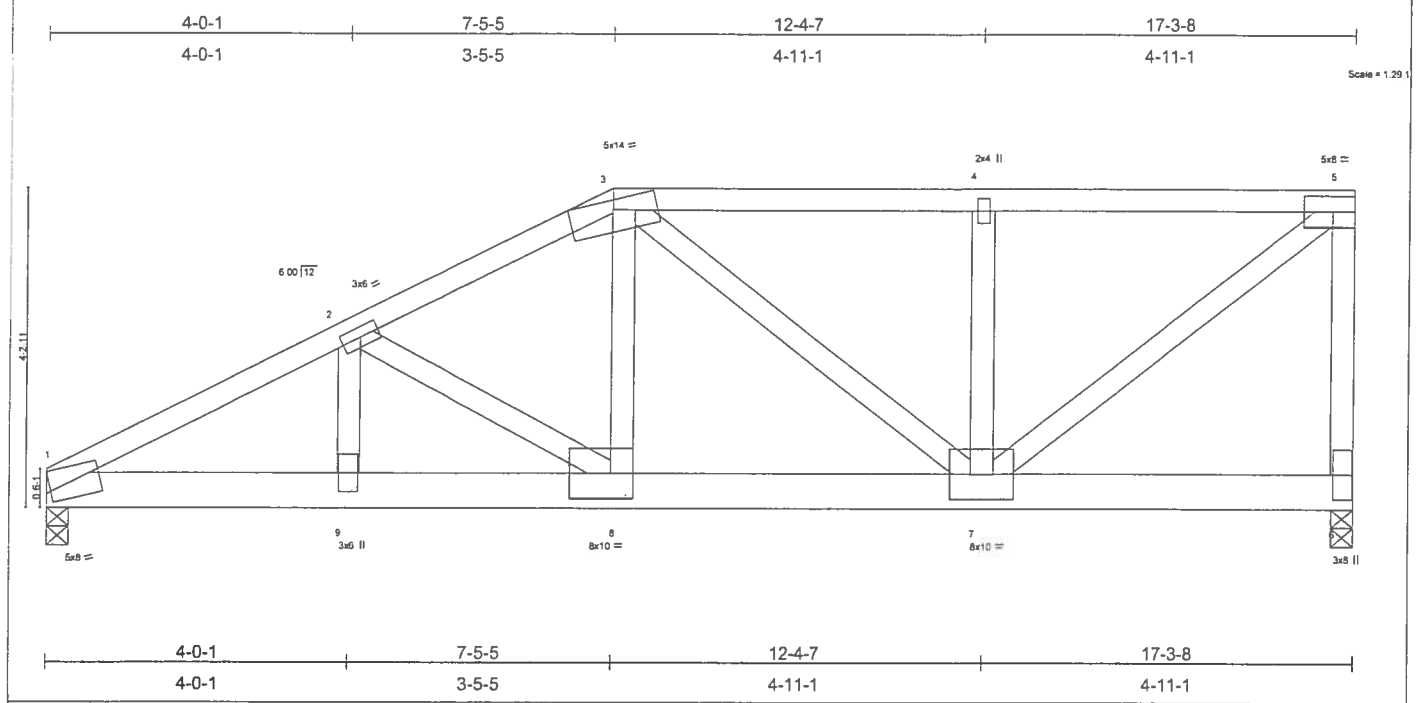

Plate Offsets (X,Y): [8:0-3-8,0-4-0]

LOADING (psf)		SPACING 2-0-0		CSI		DEFL	in	(loc)	l/defl	L/d	PLATES	GRIP
TCLL	20.0	Plates Increase	1.25	TC	0.85	Vert(LL)	-0.12	7-8	>999	240	MT20	244/190
TCDL	7.0	Lumber Increase	1.25	BC	0.67	Vert(TL)	-0.19	7-8	>999	180		
BCLL	10.0	Rep Stress Incr	NO	WB	1.00	Horz(TL)	0.04	6	n/a	n/a		
BCDL	5.0	Code FBC2004/TPI2002		(Matrix)							Weight: 217 lb	

LUMBER
TOP CHORD 2 X 4 SYP No.2
BOT CHORD 2 X 6 SYP No.1D
WEBS 2 X 4 SYP No.3

BRACING
TOP CHORD Structural wood sheathing directly applied or 4-4-5 oc purlins, except end verticals.
BOT CHORD Rigid ceiling directly applied or 10-0-0 oc bracing.

REACTIONS (lb/size) 1=5078/0-3-8, 6=5277/0-3-8
Max Horz 1=178(load case 4)
Max Uplift1=-1911(load case 4), 6=-2056(load case 3)

FORCES (lb) - Maximum Compression/Maximum Tension
TOP CHORD 1-2=-8457/3181, 2-3=-6675/2553, 3-4=-5020/1952, 4-5=-5019/1952, 5-6=-4164/1687
BOT CHORD 1-9=-2913/7386, 8-9=-2913/7386, 7-8=-2373/6086, 6-7=-68/152
WEBS 2-9=-606/1742, 2-8=-1659/682, 3-8=-1279/3443, 3-7=-1354/587, 4-7=-409/360, 5-7=-2420/6252

NOTES
1) 2-ply truss to be connected together with 10d (0.131"x3") nails as follows:
Top chords connected as follows: 2 X 4 - 1 row at 0-9-0 oc.
Bottom chords connected as follows: 2 X 6 - 2 rows at 0-9-0 oc.
Webs connected as follows: 2 X 4 - 1 row at 0-9-0 oc.
2) All loads are considered equally applied to all plies, except if noted as front (F) or back (B) face in the LOAD CASE(S) section. Ply to ply connections have been provided to distribute only loads noted as (F) or (B), unless otherwise indicated.
3) Wind: ASCE 7-02; 110mph (3-second gust); h=24ft; TCDL=4.2psf; BCDL=3.0psf; Category II; Exp B; enclosed; MWFRS gable end zone; Lumber DOL=1.60 plate grip DOL=1.60.
4) Provide adequate drainage to prevent water ponding.
5) Provide mechanical connection (by others) of truss to bearing plate capable of withstanding 1911 lb uplift at joint 1 and 2056 lb uplift at joint 6.
6) Girder carries tie-in span(s): 24-8-0 from 0-0-0 to 17-3-8
7) Girder carries hip end with 0-0-0 right side setback, 7-5-5 left side setback, and 5-1-0 end setback.
8) Hanger(s) or other connection device(s) shall be provided sufficient to support concentrated load(s) 373 lb down and 192 lb up at 7-5-5 on bottom chord. The design/selection of such connection device(s) is the responsibility of others.

LOAD CASE(S) Standard
1) Regular: Lumber Increase=1.25, Plate Increase=1.25
Uniform Loads (plf)
Vert: 1-3=-54, 3-5=-92(F=-38), 1-8=-500(F=-470), 6-8=-521(F=-491)
Concentrated Loads (lb)
Vert: 8=-373(F)

NOVEMBER 02, 2006 TRUSS DESIGN ENGINEER:
THOMAS E. MILLER PE 56877, BYRON K. ANDERSON PE 60987
STRUCTURAL ENGINEERING AND INSPECTIONS, INC. EB 9196
16105 N. FLORIDA AVE. STE B, LUTZ, FL 33549

Dwg.#110206l105

Job	Truss	Truss Type	Qty	Ply	LINTON RESIDENCE
L216061	T23	COMMON	2	1	Job Reference (optional)

Builders FirstSource, Lake City, Fl 32055 — 6.300 s Apr 19 2006 MiTek Industnes, Inc. Wed Nov 01 16:41:35 2006 Page 1

-2-0-0	5-4-5	9-10-3	14-4-0	18-9-13	23-3-11	28-8-0	30-8-0
2-0-0	5-4-5	4-5-13	4-5-13	4-5-13	4-5-13	5-4-5	2-0-0

Scale = 1:53.6

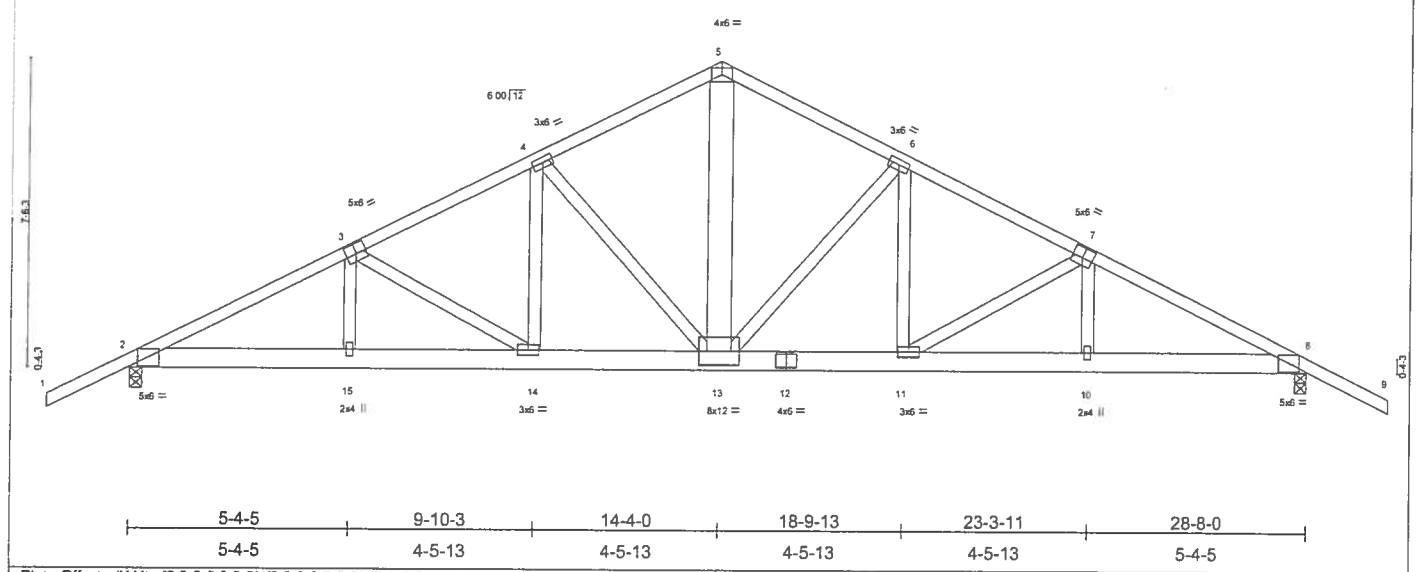

5-4-5	9-10-3	14-4-0	18-9-13	23-3-11	28-8-0
5-4-5	4-5-13	4-5-13	4-5-13	4-5-13	5-4-5

Plate Offsets (X,Y): [2:0-3-0,0-2-9], [3:0-3-0,0-3-0], [7:0-3-0,0-3-0], [8:0-3-0,0-2-9]

LOADING (psf)		SPACING 2-0-0		CSI		DEFL	in	(loc)	l/defl	L/d	PLATES	GRIP
TCLL	20.0	Plates Increase	1.25	TC	0.33	Vert(LL)	-0.16	13	>999	240	MT20	244/190
TCDL	7.0	Lumber Increase	1.25	BC	0.39	Vert(TL)	-0.25	13	>999	180		
BCLL	10.0	Rep Stress Incr	NO	WB	0.40	Horz(TL)	0.07	8	n/a	n/a		
BCDL	5.0	Code FBC2004/TPI2002		(Matrix)							Weight: 195 lb	

LUMBER
TOP CHORD 2 X 4 SYP No.2
BOT CHORD 2 X 6 SYP No.1D
WEBS 2 X 4 SYP No.3 *Except*
W5 2 X 8 SYP No.1D

BRACING
TOP CHORD Structural wood sheathing directly applied or 3-3-8 oc purlins.
BOT CHORD Rigid ceiling directly applied or 7-11-11 oc bracing.

REACTIONS (lb/size) 2=1834/0-3-8, 8=1834/0-3-8
Max Horz 2=141(load case 4)
Max Uplift2=-783(load case 4), 8=-783(load case 5)

FORCES (lb) - Maximum Compression/Maximum Tension
TOP CHORD 1-2=0/51, 2-3=-3344/1230, 3-4=-2962/1186, 4-5=-2555/1106, 5-6=-2555/1106, 6-7=-2962/1186, 7-8=-3344/1232, 8-9=0/51
BOT CHORD 2-15=-1097/2924, 14-15=-1099/2921, 13-14=-952/2601, 12-13=-873/2601, 11-12=-873/2601, 10-11=-967/2921, 8-10=-966/2924
WEBS 3-15=0/122, 3-14=-379/173, 4-14=-77/343, 4-13=-546/274, 5-13=-832/1984, 6-13=-546/274, 6-11=-77/343, 7-11=-379/174, 7-10=0/122

NOTES
1) Unbalanced roof live loads have been considered for this design.
2) Wind: ASCE 7-02; 110mph (3-second gust); h=24ft; TCDL=4.2psf; BCDL=3.0psf; Category II; Exp B; enclosed; MWFRS gable end zone; Lumber DOL=1.60 plate grip DOL=1.60
3) Provide mechanical connection (by others) of truss to bearing plate capable of withstanding 783 lb uplift at joint 2 and 783 lb uplift at joint 8.
4) Girder carries hip end with 14-4-0 right side setback, 14-4-0 left side setback, and 4-1-8 end setback.
5) Hanger(s) or other connection device(s) shall be provided sufficient to support concentrated load(s) 1054 lb down and 542 lb up at 14-4-0 on bottom chord. The design/selection of such connection device(s) is the responsibility of others.
6) In the LOAD CASE(S) section, loads applied to the face of the truss are noted as front (F) or back (B).

LOAD CASE(S) Standard
1) Regular: Lumber Increase=1.25, Plate Increase=1.25
Uniform Loads (plf)
Vert: 1-5=-54, 5-9=-54, 2-8=-30
Concentrated Loads (lb)
Vert: 13=-1054(F)

NOVEMBER 02, 2006 TRUSS DESIGN ENGINEER:
THOMAS E. MILLER PE 56877, BYRON K. ANDERSON PE 60987
STRUCTURAL ENGINEERING AND INSPECTIONS, INC. EB 9196
16105 N. FLORIDA AVE. STE B, LUTZ, FL 33549

Dwg.#1102061106

Job	Truss	Truss Type	Qty	Ply	LINTON RESIDENCE
L216061	T24	COMMON	10	1	Job Reference (optional)

Builders FirstSource, Lake City, Fl 32055 — 6.300 s Apr 19 2006 MiTek Industries, Inc. Wed Nov 01 16:42:08 2006 Page 1

-2-0-0	7-5-4	14-4-0	21-2-12	28-8-0	30-8-0
2-0-0	7-5-4	6-10-12	6-10-12	7-5-4	2-0-0

Scale = 1:53.6

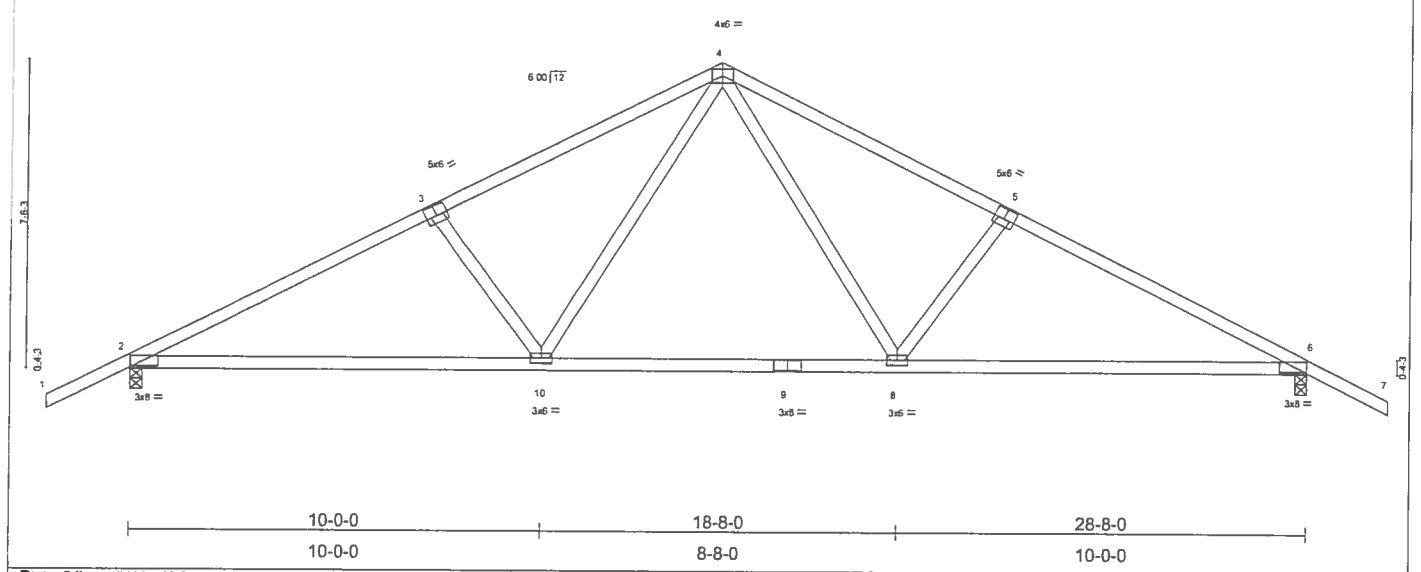

Plate Offsets (X,Y): [2:0-8-0,0-0-6], [3:0-3-0,0-3-0], [5:0-3-0,0-3-0], [6:0-8-0,0-0-6]

LOADING (psf)		SPACING 2-0-0		CSI		DEFL	in	(loc)	l/defl	L/d	PLATES	GRIP
TCLL	20.0	Plates Increase	1.25	TC	0.44	Vert(LL)	-0.39	8-10	>866	240	MT20	244/190
TCDL	7.0	Lumber Increase	1.25	BC	0.92	Vert(TL)	-0.63	8-10	>540	180		
BCLL	10.0	Rep Stress Incr	YES	WB	0.42	Horz(TL)	0.09	6	n/a	n/a		
BCDL	5.0	Code FBC2004/TPI2002		(Matrix)							Weight: 134 lb	

LUMBER
TOP CHORD 2 X 4 SYP No.2
BOT CHORD 2 X 4 SYP No.2 *Except*
B1 2 X 4 SYP No.1D
WEBS 2 X 4 SYP No.3

BRACING
TOP CHORD Structural wood sheathing directly applied or 3-5-11 oc purlins.
BOT CHORD Rigid ceiling directly applied or 2-2-0 oc bracing.

REACTIONS (lb/size) 2=1524/0-3-8, 6=1524/0-3-8
Max Horz 2=139(load case 5)
Max Uplift2=-594(load case 5), 6=-594(load case 6)

FORCES (lb) - Maximum Compression/Maximum Tension
TOP CHORD 1-2=0/47, 2-3=-2538/829, 3-4=-2311/810, 4-5=-2308/810, 5-6=-2536/828, 6-7=0/47
BOT CHORD 2-10=-713/2185, 9-10=-362/1500, 8-9=-362/1500, 6-8=-584/2183
WEBS 3-10=-359/308, 4-10=-336/969, 4-8=-335/964, 5-8=-361/308

NOTES
1) Unbalanced roof live loads have been considered for this design.
2) Wind: ASCE 7-02; 110mph (3-second gust); h=24ft; TCDL=4.2psf; BCDL=3.0psf; Category II; Exp B; enclosed; MWFRS gable end zone and C-C Interior(1) zone; Lumber DOL=1.60 plate grip DOL=1.60. This truss is designed for C-C for members and forces, and for MWFRS for reactions specified.
3) Provide mechanical connection (by others) of truss to bearing plate capable of withstanding 594 lb uplift at joint 2 and 594 lb uplift at joint 6.
4) In the LOAD CASE(S) section, loads applied to the face of the truss are noted as front (F) or back (B).

LOAD CASE(S) Standard
1) Regular: Lumber Increase=1.25, Plate Increase=1.25
Uniform Loads (plf)
Vert: 1-4=-54, 4-7=-54, 2-10=-30, 8-10=-80(F=-50), 6-8=-30

NOVEMBER 02, 2006 TRUSS DESIGN ENGINEER:
THOMAS E. MILLER PE 56877, BYRON K. ANDERSON PE 60987
STRUCTURAL ENGINEERING AND INSPECTIONS, INC. EB 9196
16105 N. FLORIDA AVE. STE B, LUTZ, FL 33549

Symbols

PLATE LOCATION AND ORIENTATION

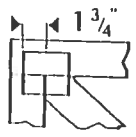

*Center plate on joint unless x, y offsets are indicated. Dimensions are in ft-in-sixteenths. Apply plates to both sides of truss and securely seat.

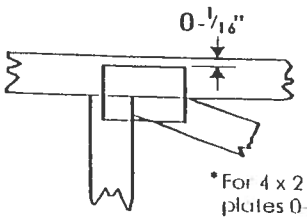

*For 4 x 2 orientation, locate plates 0-1/16" from outside edge of truss.

*This symbol indicates the required direction of slots in connector plates.

***Plate location details available in MiTek 20/20 software or upon request.**

PLATE SIZE

4 X 4 — The first dimension is the width perpendicular to slots. Second dimension is the length parallel to slots.

LATERAL BRACING

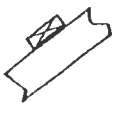

Indicated by symbol shown and/or by text in the bracing section of the output. Use T, I or Eliminator bracing if indicated.

BEARING

Indicates location where bearings (supports) occur. Icons vary but reaction section indicates joint number where bearings occur.

Industry Standards:

ANSI/TPI1: National Design Specification for Metal Plate Connected Wood Truss Construction.
DSB-89: Design Standard for Bracing.
BCSI1: Building Component Safety Information, Guide to Good Practice for Handling, Installing & Bracing of Metal Plate Connected Wood Trusses.

Numbering System

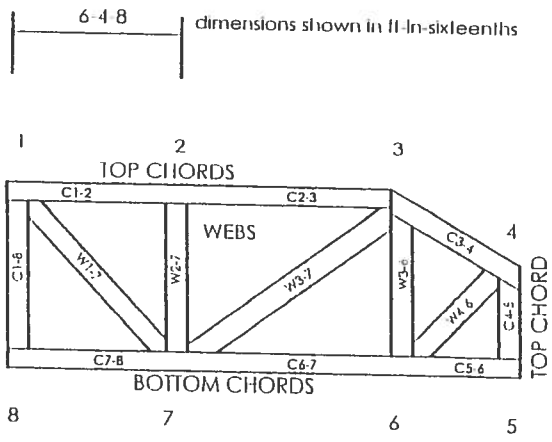

JOINTS ARE GENERALLY NUMBERED/LETTERED CLOCKWISE AROUND THE TRUSS STARTING AT THE JOINT FARTHEST TO THE LEFT.

CHORDS AND WEBS ARE IDENTIFIED BY END JOINT NUMBERS/LETTERS.

CONNECTOR PLATE CODE APPROVALS

BOCA	96-31, 95-43, 96-20-1, 96-67, 84-32
ICBO	4922, 5243, 5363, 3907
SBCCI	9667, 9730, 9604B, 9511, 9432A

MiTek®

MiTek Engineering Reference Sheet: MII-7473

General Safety Notes

Failure to Follow Could Cause Property Damage or Personal Injury

1. Additional stability bracing for truss system, e.g. diagonal or X-bracing, is always required. See BCSI1.
2. Never exceed the design loading shown and never stack materials on inadequately braced trusses.
3. Provide copies of this truss design to the building designer, erection supervisor, property owner and all other interested parties.
4. Cut members to bear tightly against each other.
5. Place plates on each face of truss at each joint and embed fully. Knots and wane at joint locations are regulated by ANSI/TPI1.
6. Design assumes trusses will be suitably protected from the environment in accord with ANSI/TPI1.
7. Unless otherwise noted, moisture content of lumber shall not exceed 19% at time of fabrication.
8. Unless expressly noted, this design is not applicable for use with fire retardant or preservative treated lumber.
9. Camber is a non-structural consideration and is the responsibility of truss fabricator. General practice is to camber for dead load deflection.
10. Plate type, size, orientation and location dimensions shown indicate minimum plating requirements.
11. Lumber used shall be of the species and size, and in all respects, equal to or better than that specified.
12. Top chords must be sheathed or purlins provided at spacing shown on design.
13. Bottom chords require lateral bracing at 10 ft. spacing, or less, if no ceiling is installed, unless otherwise noted.
14. Connections not shown are the responsibility of others.
15. Do not cut or alter truss member or plate without prior approval of a professional engineer.
16. Install and load vertically unless indicated otherwise.

© 2004 MiTek®

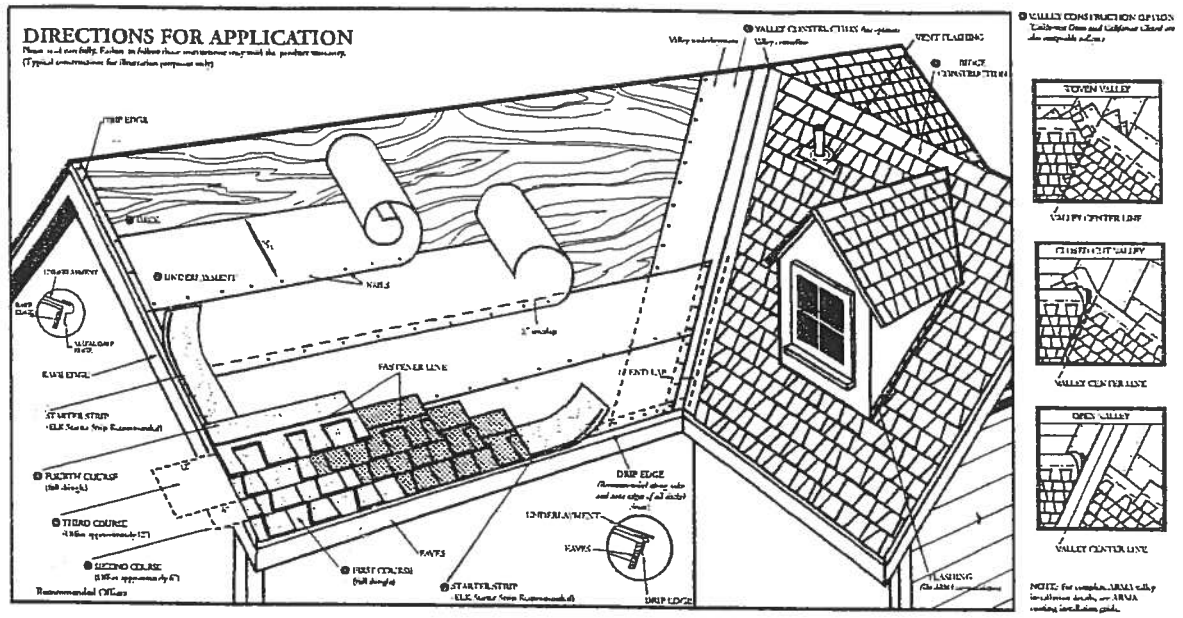

DIRECTIONS FOR APPLICATION

These application instructions are the minimum required to meet Elk's application requirements. Your failure to follow these instructions may void the product warranty. In some areas, the building codes may require additional application techniques or methods beyond our instructions. In these cases, the local code must be followed. Under no circumstances will Elk accept application requirements that are less than those printed here. Shingles should not be jammed tightly together. All attics should be properly ventilated. Note: It is not necessary to remove tape on back of shingle.

❶ DECK PREPARATION

Roof decks should be dry, well-seasoned 1" x 6" boards or exterior grade plywood minimum 3/8" thick and conform to the specifications of the American Plywood Association or 7/16" oriented strandboard, or 7/16" chipboard.

❷ UNDERLAYMENT

Apply underlayment (Non-Perforated No. 15 or 30 asphalt saturated felt). Elk Versoshield® or self adhering underlayment is also acceptable. Cover drip edge at eaves only.

For low slope(2/12 up to 4/12), completely cover the deck with two plies of underlayment overlapping a minimum of 19". Begin by fastening a 19" wide strip of underlayment placed along the eaves. Place a full 36" wide sheet over the starter, horizontally placed along the eaves and completely overlapping the starter strip.

EAVE FLASHING FOR ICE DAMS (ASK A ROOFING CONTRACTOR, REFER TO ARMA MANUAL OR CHECK LOCAL CODES)

For standard slope (4/12 to less than 21/12), use coated roll roofing of no less than 50 pounds over the felt underlayment extending from the eave edge to a point at least 24" beyond the inside wall of the living space below or one layer of a self-adhered eave and flashing membrane.

For low slope (2/12 up to 4/12), use a continuous layer of asphalt plastic cement between the two plies of underlayment from the eave edge up roof to a point at least 24" beyond the inside wall of the living space below or one layer of a self-adhered eave and flashing membrane.

Consult the Elk Technical Services Department for application specifications over other decks and other slopes.

❸ STARTER SHINGLE COURSE

USE AN ELK STARTER STRIP OR THE HEADLAP OF A STRIP SHINGLE WITH THE ADHESIVE STRIP POSITIONED AT THE EAVE EDGE. With at least 3" trimmed from the end of the first shingle, start at the rake edge overhanging the eave and rake edges 1/2" to 3/4". Fasten 2" from the lower edge and 1" from each side.

❹ FIRST COURSE

Start at rake and continue course with full shingles laid flush with the starter course. Shingles may be applied with a course alignment of 45° on the roof

❺ SECOND COURSE

Offset the second course of shingles with respect to the first by approximately 6". Other offsets are approved if greater than 4".

❻ THIRD COURSE

Offset the next course by 6" with respect to the second course, or consistant with the original offset.

❼ FOURTH COURSE

Start at the rake and continue with full shingles across roof.

FIFTH AND SUCCEEDING COURSES.

Repeat application as shown for second, third, and fourth courses. Do not rack shingles straight up the roof. Offsets may be adjusted around valleys and penetrations.

❽ VALLEY CONSTRUCTION

Open, woven and closed cut valleys are acceptable when applied by Asphalt Roofing Manufacturing Association (ARMA) recommended procedures. For metal valleys, use 36" wide vertical underlayment prior to applying metal flashing (secure edge with nails). No nails are to be within 6" of valley center.

❾ RIDGE CONSTRUCTION

For ridge construction Elk recommends Class "A" 2"Ridge or Seal-A-Ridge® with formula *FLX*™ or RidgeCrest® with *FLX* (See ridge package for installation instructions). Vented RidgeCrest or 3-tab shingles are also approved.

FASTENERS

While nailing is the preferred method for Elk shingles, Elk will accept fastening methods according to the following instructions.

Using the fastener line as a reference, nail or staple the shingle in the double thickness common bond area. For shingles without a fastener line, nails or staples must be placed between and/or in the sealant dots.

NAILS: Corrosive resistant, 3/8" head, minimum 12-gauge roofing nails. Elk recommends 1-1/4" for new roofs and 1-1/2" for roof-overs. In cases where you are applying shingles to a roof that has an exposed overhang, for new roofs only, 3/4" ring shank nails are allowed to be used from the eave's edge to a point up the roof that is past the outside wall line. 1" ring shank nails allowed for re-roof.

STAPLES: Corrosive resistant, 16-gauge minimum, crown width minimum of 15/16". Note: An improperly adjusted staple gun can result in raised staples that can cause a fish-mouthed appearance and can prevent sealing.

Fasteners should be long enough to obtain 3/4" deck penetration or penetration through deck, whichever is less. This product meets the requirements of the IRC 2003 code when fastened with 4 nails.

MANSARD APPLICATIONS

Correct fastening is critical to the performance of the roof. For slopes exceeding 60° (or 21/12) use six fasteners per shingle. Locate fasteners in the fastener area 1" from each side edge with the remaining four fasteners equally spaced along the length of the double thickness (laminated) area. Only fastening methods according to the above instructions are acceptable.

LIMITED WIND WARRANTY

- For a Limited Wind Warranty, all Prestique and Raised Profile™ shingles must be applied with 4 properly placed fasteners, or in the case of mansard applications, 6 properly placed fasteners per shingle.
- For a Limited Wind Warranty up to 110 MPH for Prestique Gallery Collection or Prestique Plus or 50 MPH for Prestique I, shingles must be applied with 6 properly placed NAILS per shingle. SHINGLES APPLIED WITH STAPLES WILL NOT QUALIFY FOR THIS ENHANCED LIMITED WIND WARRANTY. Also, Elk Starter Strip shingles must be applied at the eaves and rake edges to qualify Prestique Plus, Prestique Gallery Collection and Prestique I shingles for this enhanced Limited Wind Warranty. Under no circumstances should the Elk Shingles or the Elk Starter Strip overhang the eaves or rake edge more than 3/4 of an inch.

HELP STOP BLOW-OFFS AND CALL-BACKS

A minimum of four fasteners must be driven into the DOUBLE THICKNESS (laminated) area of the shingle. Nails or staples must be placed along – and through – the "fastener line" or on products without fastener lines, nail or staple between and in line with sealant dots. CAUTION: Do not use fastener line for shingle alignment.

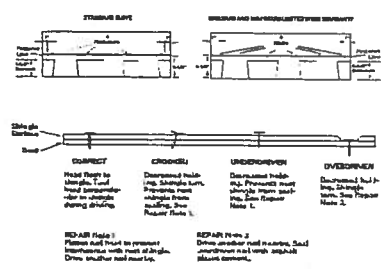

Refer to local codes which in some areas may require specific application techniques beyond those Elk has specified.

All Prestique and Raised Profile shingles have a U.L.® Wind Resistance Rating when applied in accordance with these instructions using nails or staples on re-roofs as well as new construction.

CAUTION TO WHOLESALER: Careless and improper storage or handling can harm fiberglass shingles. Keep these shingles completely covered, dry, reasonably cool, and protected from the weather. Do not store near various sources of heat. Do not store in direct sunlight until applied. DO NOT DOUBLE STACK. Systematically rotate all stock so that the material that has been stored the longest will be the first to be moved out.

ELK
The Premium Choice
www.elkcorp.com

©2004, Elk Premium Building Products, Inc. All trademarks, ®, are registered trademarks of Elk Premium Building Products, Inc. All trademarks, ™, are trademarks pending registration of Elk Premium Building Products, Inc., an ElkCorp company. UL is registered trademark of Underwriters Laboratories, Inc.

00RS

MIAMI-DADE

MIAMI-DADE COUNTY, FLORIDA
METRO-DADE FLAGLER BUILDING

BUILDING CODE COMPLIANCE OFFICE
METRO-DADE FLAGLER BUILDING
140 WEST FLAGLER STREET, SUITE 1603
MIAMI, FLORIDA 33130-1563
(305) 375-2901 FAX (305) 375-2908

CONTRACTOR LICENSING SECTION
(305) 375-2527 FAX (305) 375-2558

CONTRACTOR ENFORCEMENT DIVISION
(305) 375-2966 FAX (305) 375-2908

PRODUCT CONTROL DIVISION
(305) 375-2902 FAX (305) 372-6339

PRODUCT CONTROL NOTICE OF ACCEPTANCE

Premdor Entry Systems
One Premdor Drive
Dickson ,TN 37055

Your application for Notice of Acceptance (NOA) of:
Entergy SE Double Door w/sidelites-Inswing -Opaque-8'0" In a Wood Frame
under Chapter 8 of the Code of Miami-Dade County governing the use of Alternate Materials and Types of Construction, and completely described herein, has been recommended for acceptance by the Miami-Dade County Building Code Compliance Office (BCCO) under the conditions specified herein.

This NOA shall not be valid after the expiration date stated below. BCCO reserves the right to secure this product or material at any time from a jobsite or manufacturer's plant for quality control testing. If this product or material fails to perform in the approved manner, BCCO may revoke, modify, or suspend the use of such product or material immediately. BCCO reserves the right to revoke this approval, if it is determined by BCCO that this product or material fails to meet the requirements of the South Florida Building Code.

The expense of such testing will be incurred by the manufacturer.

ACCEPTANCE NO.: 01-1031.06
EXPIRES: 11/05/2006

Raul Fernandez
Chief Product Control Division

THIS IS THE COVERSHEET, SEE ADDITIONAL PAGES FOR SPECIFIC AND GENERAL CONDITIONS
BUILDING CODE & PRODUCT REVIEW COMMITTEE

This application for Product Approval has been reviewed by the BCCO and approved by the Building Code and Product Review Committee to be used in Miami-Dade County, Florida under the conditions set forth above.

Francisco J. Quintana, R.A.
Director
Miami-Dade County
Building Code Compliance Office

APPROVED: 12/11/2001

Premdor Entry Systems

ACCEPTANCE No.: 01-1031.06

APPROVED: December 11, 2001

EXPIRES: November 5, 2006

NOTICE OF ACCEPTANCE: SPECIFIC CONDITIONS

1. SCOPE

1.1 This renews Notice of Acceptance (NOA) No. 00-0720.10, which was issued on November 09, 2000. It renews the approval of a residential insulated steel door, as described in Section 2 of this NOA, designed to comply with the South Florida Building Code (SFBC), 1994 Edition for Miami-Dade County, for the locations where the pressure requirements, as determined by SFBC Chapter 23, do not exceed the Design Pressure Rating values indicated in the approved drawings.

2. PRODUCT DESCRIPTION

2.1 The Series **"Entergy" Inswing Opaque Double Residential Insulated Steel Doors(Metal Edge) with Sidelites 8' 0" High - Impact Resistant Door Slab Only** and its components shall be constructed in strict compliance with the following document: Drawing No 31-1034-EM-I, Sheets 1 through 6 of 6, titled "Premdor (Entergy Metal Edge) Double Door w/ Sidelites in Wood Frame w/ Bumper Threshold – 8' 0" Height (Inswing)," prepared by manufacturer, dated 6/15/98 and revised on 7/27/01, bearing the Miami-Dade County Product Control renewal stamp with the NOA number and expiration date by the Miami-Dade County Product Control Division. This document shall hereinafter be referred to as the approved drawings.

3. LIMITATIONS

3.1 This approval applies to single unit applications of pair of doors and single door with sidelites, as shown in approved drawings. Single door units shall include all components described in the active leaf of this approval.

3.2 Unit shall be installed only at locations protected by a canopy or overhang such that the angle between the edge of canopy or overhang to sill is less than 45 degrees. Unless unit is installed in non-habitable areas where the unit and the area are designed to accept water infiltration.

4. INSTALLATION

4.1 The residential insulated steel door and its components shall be installed in strict compliance with the approved drawings.

4.2 Hurricane protection system (shutters):
Door Slab: The installation of this unit <u>will not require</u> a hurricane protective system.
Sidelites: The installation of these units <u>will require</u> a hurricane protective system.

5. LABELING

5.1 Each unit shall bear a permanent label with the manufacturer's name or logo, city, state and following statement: "Miami-Dade County Product Control Approved".

6. BUILDING PERMIT REQUIREMENTS

6.1 Application for building permit shall be accompanied by copies of the following:

6.1.1 This Notice of Acceptance

6.1.2 Duplicate copies of the approved drawings, as identified in Section 2 of this Notice of Acceptance, clearly marked to show the components selected for the proposed installation.

6.1.3 Any other documents required by the Building Official or the South Florida Building Code (SFBC) in order to properly evaluate the installation of this system.

Raul Rodriguez, Chief
Product Control Division

Premdor Entry Systems

ACCEPTANCE No.. 01-1031.06

APPROVED: December 11, 2001

EXPIRES: November 5, 2006

NOTICE OF ACCEPTANCE: STANDARD CONDITIONS

1. Renewal of this Acceptance (approval) shall be considered after a renewal application has been filed and the original submitted documentation, including test supporting data, engineering documents, are no older than eight (8) years.
2. Any and all approved products shall be permanently labeled with the manufacturer's name, city, state, and the following statement: "Miami-Dade County Product Control Approved", or as specifically stated in the specific conditions of this Acceptance.
3. Renewals of Acceptance will not be considered if:
   a) There has been a change in the South Florida Building Code affecting the evaluation of this product and the product is not in compliance with the code changes;
   b) The product is no longer the same product (identical) as the one originally approved;
   c) If the Acceptance holder has not complied with all the requirements of this acceptance, including the correct installation of the product;
   d) The engineer who originally prepared, signed and sealed the required documentation initially submitted is no longer practicing the engineering profession.
4. Any revision or change in the materials, use, and/or manufacture of the product or process shall automatically be cause for termination of this Acceptance, unless prior written approval has been requested (through the filing of a revision application with appropriate fee) and granted by this office.
5. Any of the following shall also be grounds for removal of this Acceptance.
   a) Unsatisfactory performance of this product or process.
   b) Misuse of this Acceptance as an endorsement of any product, for sales, advertising or any other purpose.
6. The Notice of Acceptance number preceded by the words Miami-Dade County, Florida, and followed by the expiration date may be displayed in advertising literature. If any portion of the Notice of Acceptance is displayed, then it shall be done in its entirety.
7. A copy of this Acceptance as well as approved drawings and other documents, where it applies, shall be provided to the user by the manufacturer or its distributors and shall be available for inspection at the job site at all time. The engineer need not reseal the copies.
8. Failure to comply with any section of this Acceptance shall be cause for termination and removal of Acceptance.
9. This Notice of Acceptance consists of pages 1, 2 and this last page 3.

END OF THIS ACCEPTANCE

Raul Rodriguez, Chief
Product Control Division

PREMDOR (ENTERGY METAL EDGED) DOUBLE DOOR
WITH SIDELITES IN WOOD FRAMES
WITH BUMPER THRESHOLD-6'0" HEIGHT (INSWING)

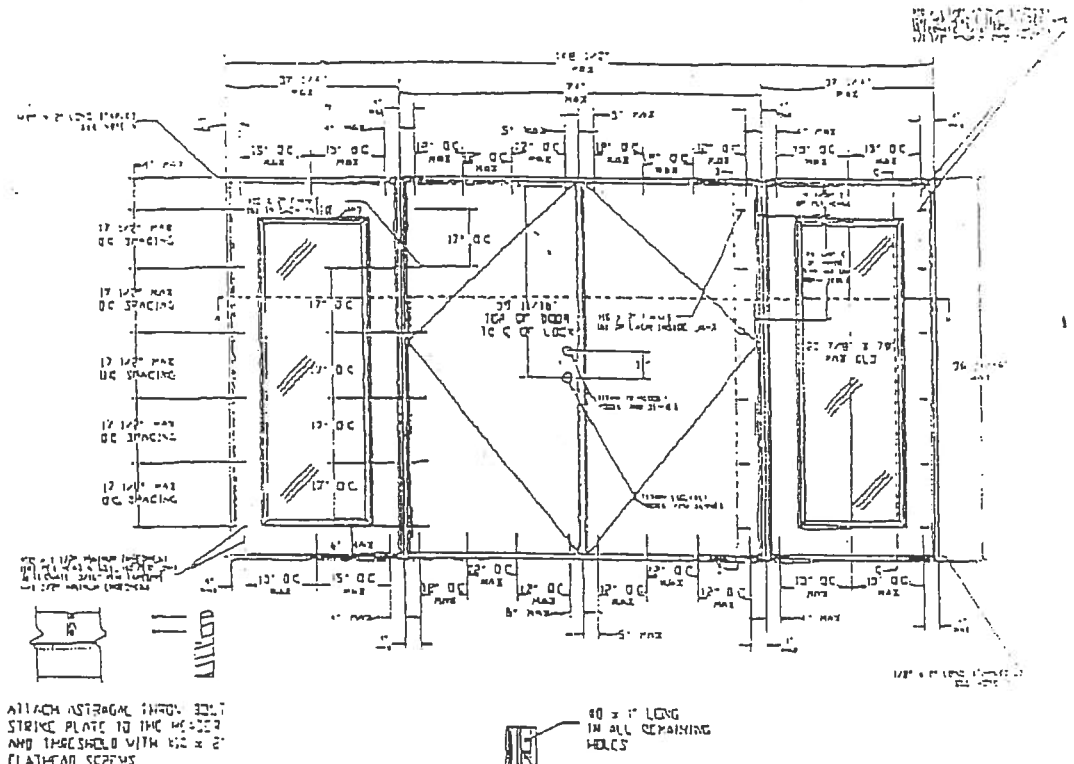

ATTACH ASTRAGAL THROUGH BOLT STRIKE PLATE TO THE HEADER AND THRESHOLD WITH #12 x 2" FLATHEAD SCREWS

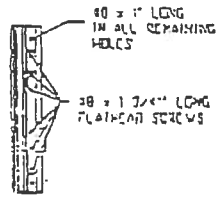

ASTRAGAL

NOTES:
1) WOOD BLOCKS BY OTHERS MUST BE ANCHORED PROPERLY TO TRANSFER LOADS TO THE STRUCTURE.
2) THE PRECEDING DRAWINGS ARE INTENDED TO SUPPLIFY THE FOLLOWING INSTALLATIONS.
A. WOOD FRAME CONSTRUCTION WHERE DOOR SYSTEM IS ANCHORED TO A MINIMUM TWO BY WOOD OPENING
B. MASONRY OR CONCRETE CONSTRUCTION WHERE DOOR SYSTEM IS ANCHORED TO A MINIMUM TWO BY STRUCTURAL WOOD BUCK
C. MASONRY OR CONCRETE CONSTRUCTION WHERE DOOR SYSTEM IS ANCHORED DIRECTLY TO CONCRETE OR MASONRY WITH OR WITHOUT A NON-STRUCTURAL TWO BY WOOD BUCK.
3. ALL ANCHORING SCREWS TO BE #10 WITH MINIMUM 1 1/2" EMBEDMENT INTO WOOD SUBSTRATE OR 3/16" PER TAPCONS WITH 1 3/4" MINIMUM EMBEDMENT INTO MASONRY
4. GLAZED UNIT MUST BE INSTALLED WITH MIAMI-DADE COUNTY APPROVED" SHUTTERS
5. HESCO STAPLES PER SIDE JAMB INTO HEADER ON SIDELITES AND DOOR. THREE STAPLES PER JAMB INTO THRESHOLD ON SIDELITES AND DOOR
6. LATEX SEALANT TO BE APPLIED AT SIDE BY SIDE JAMBS AND SIDELITES
7. DOOR/SIDELITE HEADER, DOOR/SIDELITE JAMBS, AND SIDELITE BASE CORNERS ARE COPED AND BUTTED
8. DOORS SHALL BE PRE-PRIMED WITH AN ACRYLIC LATEX WATER-BASED/ WATER-REDUCIBLE WHITE PRIMER WITH A DRY FILM THICKNESS OF 0.8 TO 1.2 MIL.
9. FRAMES SHALL BE PRE-PRIMED WITH A WATER-BASED EPOXY PRIMER WITH A DRY FILM THICKNESS OF 1.0 TO 1.2 MIL.

PRODUCT RENEWED
ACCEPTANCE NO. H-0031.06
EXPIRATION DATE: November 5, 2006
BY: PRODUCT CONTROL DIVISION
BUILDING CODE COMPLIANCE OFFICE

DESIGN PRESSURE RATINGS

	WHERE WATER INFILTRATION REQUIREMENT IS MEETING *	WHERE WATER INFILTRATION REQUIREMENT IS NOT MEETING
Positive	NOT APPROVED *	+40.0 psf
Negative	NOT APPROVED *	-40.0 psf

* UNITS SHALL BE INSTALLED ONLY AT LOCATIONS PROTECTED BY A CANOPY OR OVERHANG SUCH THAT THE ANGLE BETWEEN THE CPSC OF CANOPY OR OVERHANG TO SILL IS LESS THAN 45 DEGREES UNLESS UNIT IS INSTALLED IN NON-HABITABLE AREAS WHERE THE UNIT AND THE AREA ARE DESIGNED TO ACCEPT WATER INFILTRATION.

1	DADE COUNTY APPROVAL	[illegible]	J
0	[illegible]	[illegible]	[illegible]
		[illegible]	[illegible]
		[illegible]	[illegible]
		[illegible]	[illegible]

PREMDOR ENTRY SYSTEMS
31-1034-EM-1
SHEET 1 OF 6
C

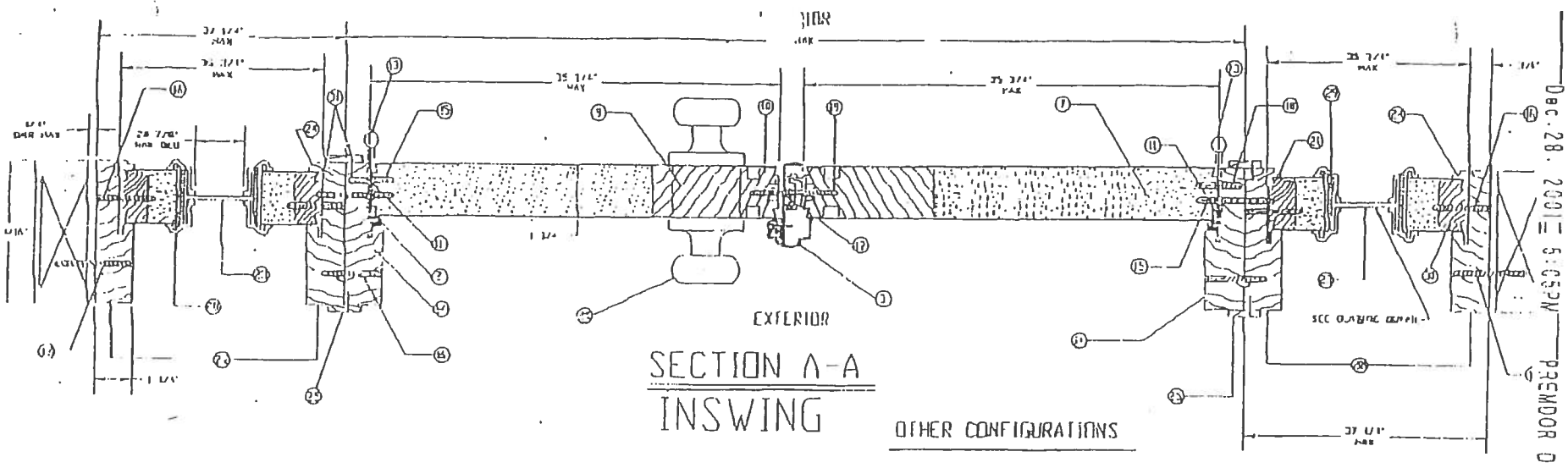

SECTION A-A
INSWING

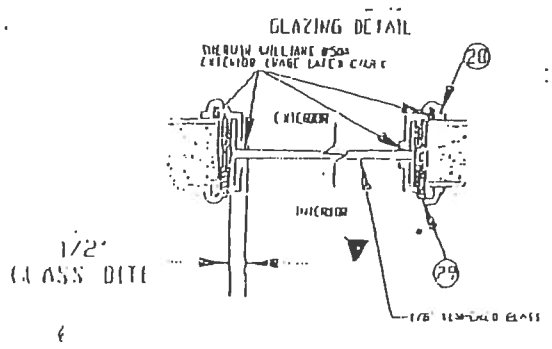

OTHER CONFIGURATIONS

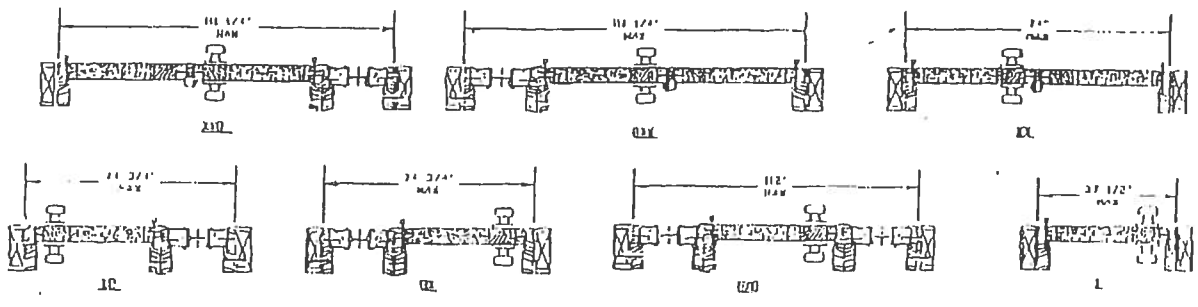

PRODUCT RENEWED
ACCEPTANCE No. 01-1031-01
EXPIRATION DATE: November 5, 2006

PREMDOR ENTRY SYSTEMS

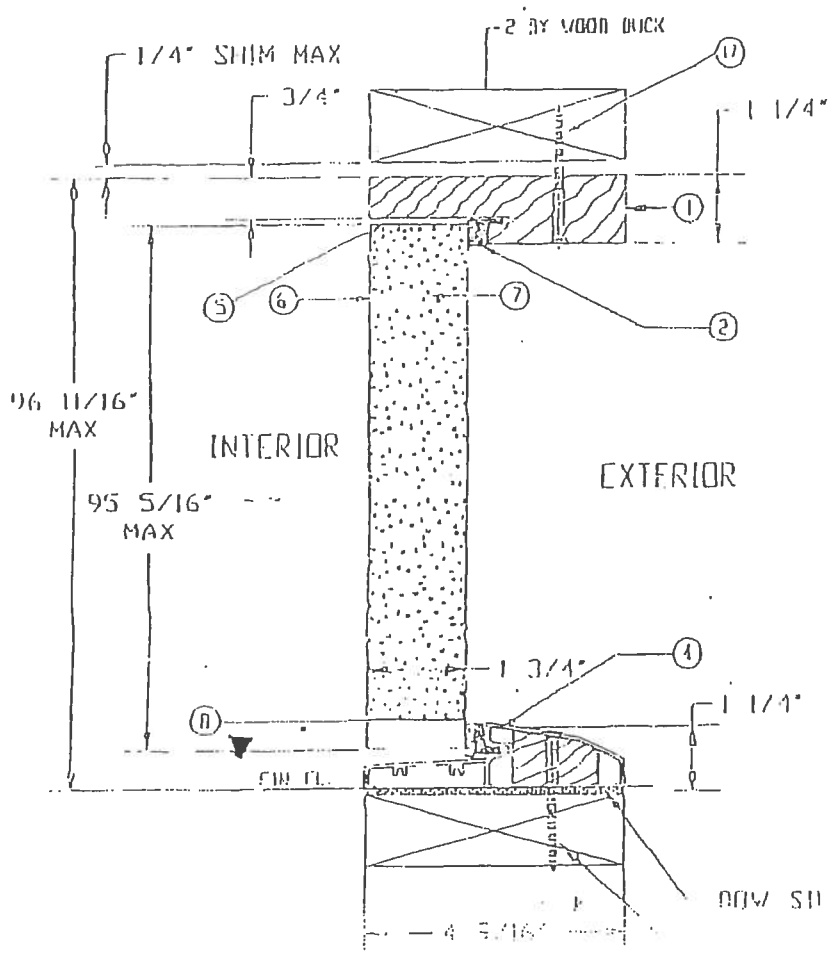

SECTION B-B

MATERIALS LIST

ITEM NO.	DESCRIPTION	PART NUMBER	COMMENTS
1	WOOD HEAD JAMB	EX-14	1 1/4" X 4 9/16" NTL. TO BE PINE OR EQUIVALENT
2	COMPRESSION WEATHERSTRIP	EX-25	LOCKSTRIP BRAND LOXSEAL 9650 (MOHAIR)
3	ALUMINUM ASTRAGAL	EX-12	PREMDOR BRAND OR EQUIVALENT - 5/16" ALUMINUM ASTRAGAL
4	ALUMINUM-STOPPED THRESHOLD	EX-15	PREMDOR BRAND OR EQUIVALENT - 1 1/4" x 4 9/16"
5	HIP CHANNEL	EX-08	PREMDOR BRAND - 1 11/16" - 20 GA STEEL
6	STEEL SCRW	[illegible]	[illegible]
7	POLYURETHANE FOAM FILL	[illegible]	FOAM - DENSITY 20 TO 25 lbs/ft³
8	BOTTOM CHANNEL	EX-07	PREMDOR BRAND - 1 11/16" - 20 GA STEEL
9	WOOD LOCK BLOCK	EX-05	[illegible] X 3 1/2" NTL. TO BE PINE OR EQUIVALENT
10	STRIKE STILE	EX-06	PREMDOR BRAND - 1 11/16" - 20 GA STEEL
11	HINGE STILE	EX-05	PREMDOR BRAND - 1 11/16" - 20 GA STEEL
12	LOCK PREP FILLER PLATE	EX-18	PREMDOR BRAND - [illegible] THICK - [illegible]
13	4"x4" HINGE	EX-16	HAGER BRAND HINGE OR EQUIVALENT - [illegible] THICK STEEL
14	WOOD HINGE JAMB	EX-13	1 1/4" X 4 9/16" NTL. TO BE PINE OR EQUIVALENT
15	#10-24 x 1/2" F.H.M.S.		(4) SCREWS PER HINGE INTO JAMB
16	#10 X 2" F.H.W.S.		[illegible] SCREWS THROUGH [illegible] STRIKE JAMB INTO SIDELITE JAMB, 4" MINIMUM TOP, MAY BE OC INDICATED (6) SCREWS THROUGH DOOR STRIKE JAMB INTO SIDELITE JAMB, 4" MINIMUM TOP, MAY BE OC INDICATED
17	[illegible]		REFER TO ELEVATION VIEW, FOR # OF SCREWS EACH AND LOCATION
18	#10 X 3/4" F.H.W.S.		(2) SCREWS PER HINGE INTO JAMB
19	#8 x 2" F.H.W.S.		(2) SCREWS AT EACH STRIKE PLATE
20	LOCKSET		SCHLAGE LOCK 120 SERIES, SCHLAGE HEADBOLT 700 SERIES
21	#10 X 1 3/4" F.H.W.S.		(2) SCREWS PER HINGE INTO JAMB
22	WOOD SIDELITE JAMB	EX-10	1 1/4" X 4 9/16" NTL. TO BE PINE OR EQUIVALENT
23	22" X 80" SINGLE PANEL GLASS	EX-19	REINFORCED GLASS IN POLYPROPYLENE FRAME - [illegible] 1/8" CLEAR TEMPERED GLASS
24	SIDELITE TRIM (WOOD)	EX-20	5/16 x 1/2" NTL. TO BE PINE OR EQUIVALENT
25	WOOD CASING	EX-21	[illegible] NTL. TO BE PINE OR EQUIVALENT - [illegible]
26	WOOD SIDELITE HEAD JAMB	EX-22	1 1/4" X 4 9/16" NTL. TO BE PINE OR EQUIVALENT
27	WOOD SIDELITE BASE	EX-23	1 1/4" X 4 9/16" NTL. TO BE PINE OR EQUIVALENT
28	POLYPROPYLENE SITE FRAME	DC-1643, DD-2	1" Polypropylene by DIN.
29	#6 X 1 1/2" PAN HEAD SCREWS		[illegible] PER FRAME [illegible]
30	SIDELITE STILES	EX-26	15/16" x 1 11/16" NTL. TO BE PINE OR EQUIVALENT
31	PIN RAIL		[illegible]

D	DADE COUNTY MODIFICATIONS	[illegible]	[illegible]
C	[illegible] TEST RESULTS	[illegible]	[illegible]
B	[illegible]	[illegible]	[illegible]
A	[illegible]	[illegible]	[illegible]

PRODUCT RENEWAL
[illegible]
EXPIRATION DATE [illegible]
BY [illegible]
PRODUCT CONTROL DIVISION
BUILDING CODE COMPLIANCE OFFICE

PREMDOR ENTRY SYSTEMS
[illegible]
[illegible]

31-1034-EM 1
SHEET 3 OF [illegible]

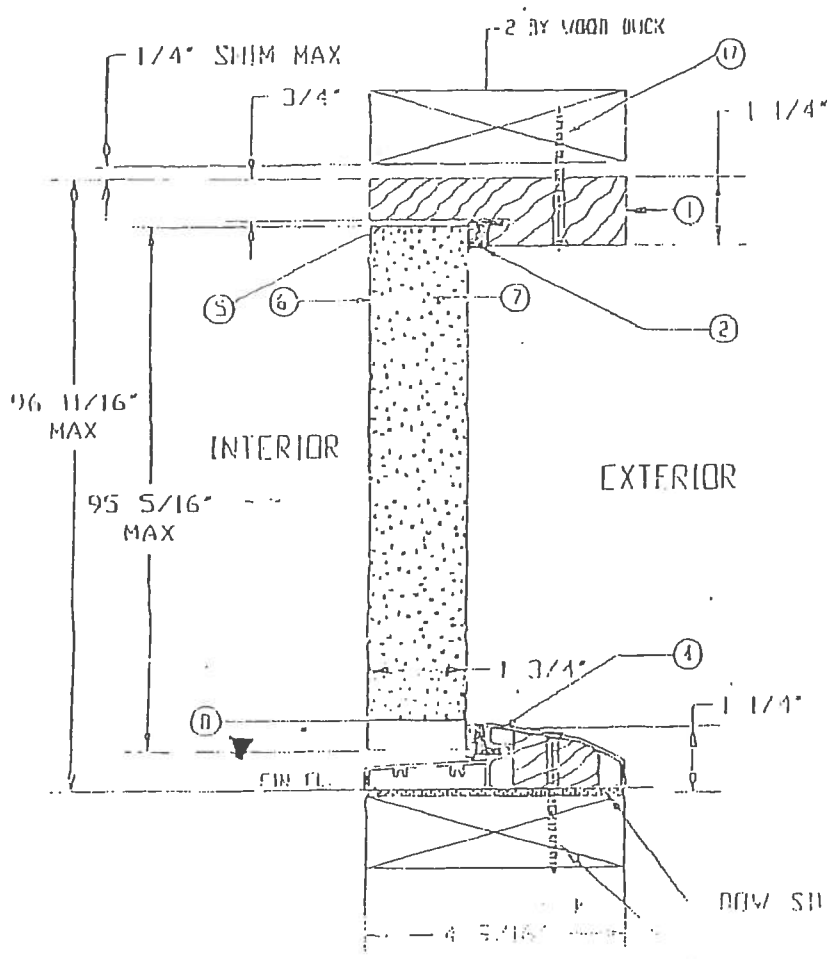

SECTION B-B

MATERIALS LIST

ITEM NO	DESCRIPTION	PART NUMBER	COMMENTS
1	WOOD HEAD JAMB	EX-14	1 1/4" X 4 9/16" NTL. TO BE PINE OR EQUIVALENT
2	COMPRESSION WEATHERSTRIP	EX-25	LOCKSCREEN BRAND LUXSEAL 3650 (BROWN)
3	ALUMINUM ASTRAGAL	EX-12	PREMDOR BRAND OR EQUIVALENT- 3/16" ALUMINUM ASTRAGAL
4	ALUMINUM-BUMPER THRESHOLD	EX-15	PREMDOR BRAND OR EQUIVALENT - 1 1/4" x 4 9/16"
5	HIP CHANNEL	EX-08	PREMDOR BRAND - 1 11/16" - 20 GA STEEL
6	STEEL SCRIM	[illegible]	[illegible]
7	POLYURETHANE FOAM FILL	BASE FOAM - DENSITY 20 TO 25 lbs/ft³	
8	BOTTOM CHANNEL	EX-07	PREMDOR BRAND - 1 11/16" - 20 GA STEEL
9	WOOD LOCK BLOCK	EX-05	[illegible] X 4 1/2" NTL. TO BE PINE OR EQUIVALENT
10	STRIKE STILE	EX-06	PREMDOR BRAND - 1 11/16" - 20 GA STEEL
11	HINGE STILE	EX-05	PREMDOR BRAND - 1 11/16" - 20 GA STEEL
12	LOCK PREP FILLER PLATE	EX-13	PREMDOR BRAND - .050" THICK- [illegible]
13	4"x4" HINGE	EX-15	HAGER BRAND HINGE OR EQUIVALENT .097" THICK STEEL
14	WOOD HINGE JAMB	EX-13	1 1/4" X 4 9/16" NTL. TO BE PINE OR EQUIVALENT
15	#10-24 x 1/2" F.H.I.S.		(4) SCREWS PER HINGE INTO [illegible]
16	#10 X 2" F.H.W.S.		(6) SCREWS THROUGH FRAME JAMB INTO STUDS, [illegible] OF THROW THRU JAMB 12" OC MINIMUM (6) SCREWS THROUGH DOOR STRIKE JAMB INTO STUDS [illegible] 4" MINIMUM TOP, SAME 12" OC MINIMUM
17	[illegible]		REFER TO ELEVATION VIEW, FOR # OF SCREWS EACH AND LOCATION
18	#10 X 3/4" F.H.W.S.		(2) SCREWS PER HINGE INTO JAMB
19	#8 x 2" F.H.W.S.		(2) SCREWS AT EACH STRIKE PLATE
20	LOCKSET		SCHLAGE LOCK 720 SERIES, SCHLAGE HEADBOLT 700 SERIES
21	#10 X 1 3/4" F.H.W.S.		(2) SCREWS PER HINGE INTO JAMB
22	WOOD STOCKLITE JAMB	EX-10	1 1/4" X 4 9/16" NTL. TO BE PINE OR EQUIVALENT
23	22" X 80" SINGLE PANEL GLASS	EX-19	TEMPERED GLASS IN POLYPROPYLENE FRAME - [illegible] 1/8" CLEAR TEMPERED GLASS
24	STOCKLITE TRIM (WOOD)	EX-20	5/16 x 1/2" NTL. TO BE PINE OR EQUIVALENT
25	WOOD CASING	EX-21	1/8" x 1" NTL. TO BE PINE OR EQUIVALENT - USED FOR [illegible] OF SIDE JAMBS AS [illegible]
26	WOOD STOCKLITE HEAD JAMB	EX-22	1 1/4" X 4 9/16" NTL. TO BE PINE OR EQUIVALENT
27	WOOD STOCKLITE BASE	EX-23	1 1/4" X 4 9/16" NTL. TO BE PINE OR EQUIVALENT
28	POLYPROPYLENE LITE FRAME	DC-1643, DC-2	HP Polypropylene by OMI.
29	#6 X 1 1/2" PAN HEAD SCREWS		(8) PER FRAME [illegible]
30	STOCKLITE STILES	EX-26	15/16" X 1 11/16" NTL. TO BE PINE OR EQUIVALENT
31	PIN NAIL		[illegible]

D	DADE COUNTY MODIFICATIONS	[illegible]	[illegible]
C	ADDED TEST RESULTS	[illegible]	[illegible]
B	[illegible]	[illegible]	[illegible]
A	RETRAWN	[illegible]	[illegible]

DOW SILICONE 1995

PRODUCT RENEWAL
[illegible]
EXPIRATION DATE [illegible]
BY [illegible]
PRODUCT CONTROL DIVISION
BUILDING CODE COMPLIANCE OFFICE

PREMDOR ENTRY SYSTEMS
[illegible]

31-1034-EM 1
SHEET 3 OF [illegible]
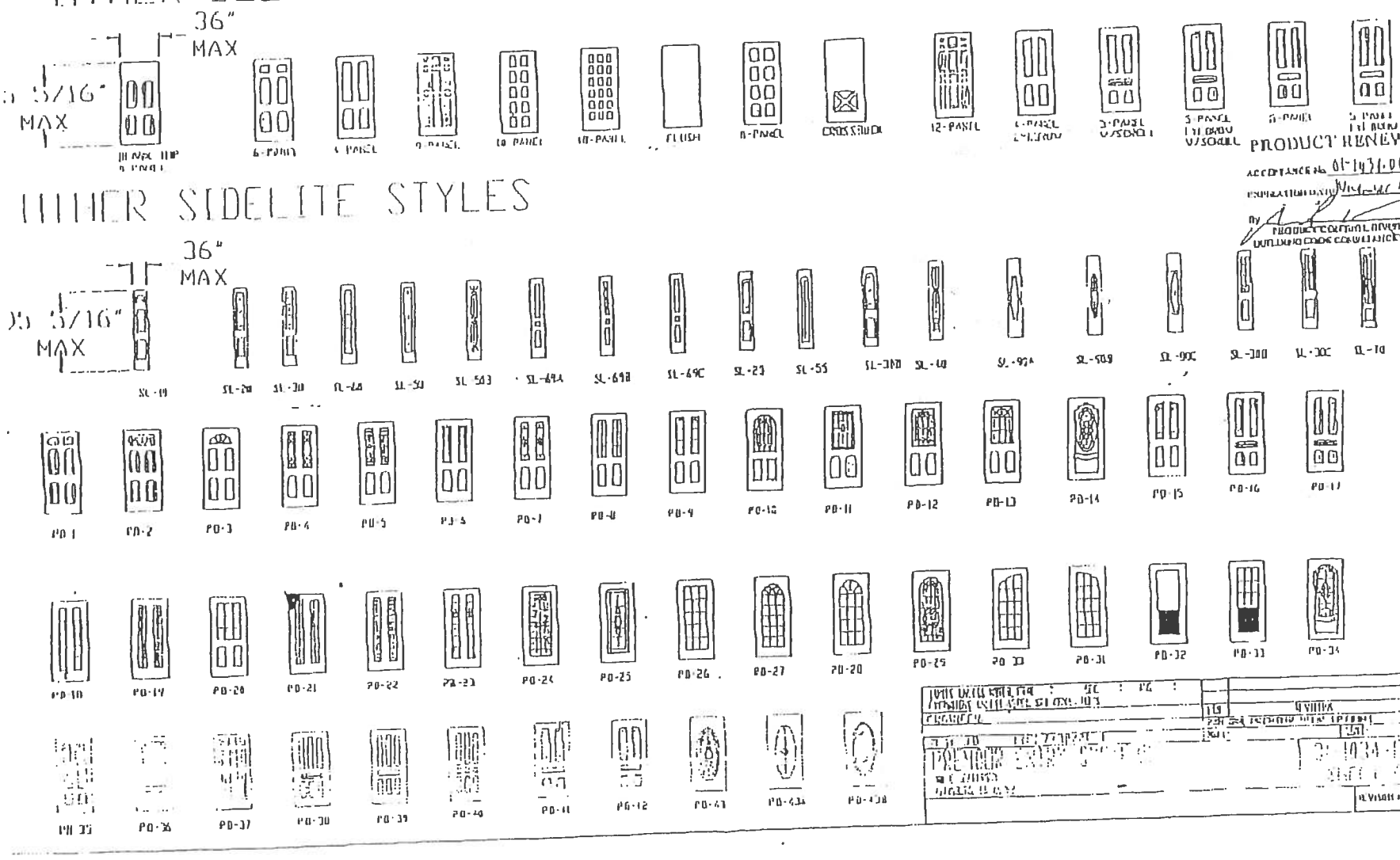
OTHER DOOR PANEL STYLES