WESTCOTT - E

FLORIDA DESIGN CRITERIA
REVISED 05-03-07

BUILDING DATA

FLORIDA BUILDING CODE 2004 : RESIDENTIAL, 2005 and 2006 SUPPLEMENT
FLORIDA BUILDING CODE 2004 : PLUMBING, 2005 and 2006 SUPPLEMENT
FLORIDA BUILDING CODE 2004 : MECHANICAL, 2005 and 2006 SUPPLEMENT
FLORIDA BUILDING CODE 2004 : FUEL GAS, 2005 and 2006 SUPPLEMENT

NATIONAL ELECTRICAL CODE 2005

STRUCTURAL DESIGN PARAMETERS: ASCE 7-2002 (PER FRC 2004 : SECTION R301.2.1.1)

CLASSIFICATION : 2

OCCUPANCY: RESIDENTIAL

BUILDING DESIGN: ENCLOSED

WIND SPEED: 125 MPH - 3 SECOND GUST (FRC 2004 : SECTION R301.2.1.3)

EXPOSURE: B

INTERNAL PRESSURE COEFFICIENT: GCpi = +/- 0.18

IMPORTANCE FACTOR: 1.0

NUMBER OF STORIES: TWO STORY

BUILDING MEAN ROOF HEIGHT: 25 FEET, MAX.

WOOD FRAMING INSPECTION
ALL PLUMBING, ELECTRICAL AND MECHANICAL ROUGH-INS MUST BE COMPLETE, INSPECTED AND APPROVED BEFORE REQUESTING THE FRAMING INSPECTION. (FRC 2004, SECTION R109.3)

TERMITE TREATMENT
THE BUILDING AND PATIO SLAB HAVE RECIEVED A COMPLETE TREATMENT FOR THE PREVENTION OF SUBTERRANEAN TERMITES. THE TREATMENT IS IN ACCORDANCE WITH THE RULES AND LAWS OF THE FLORIDA DEPARTMENT OF AGRICULTURE AND CONSUMER SERVICES. (FRC 2004, SECTION R320)

BORA CARE : TERMITE TREATMENT
THE BUILDING HAS RECIEVED A COMPLETE TREATMENT FOR THE PREVENTION OF SUBTERRANEAN TERMITES. THE TREATMENT IS IN ACCORDANCE WITH THE RULES AND LAWS OF THE FLORIDA DEPARTMENT OF AGRICULTURE AND CONSUMER SERVICES. (FRC 2004, SECTION R320.1.8)

EXTERIOR WINDOWS AND GLASS DOORS
EXTERIOR WINDOWS AND GLASS DOORS SHALL BE TESTED BY AN APPROVED INDEPENDENT TESTING LABORATORY, AND SHALL BE LABELED WITH AN APPROVED LABEL (FRC 2004, SECTION R613)

SEE MANUFACTURER'S DETAIL SHEETS FOR DESIGN CRITERIA AND INSTALLATION METHODS.

WINDBOURNE DEBRIS REGIONS
WINDOWS IN BUILDINGS LOCATED IN WIND-BOURNE DEBRIS REGIONS SHALL HAVE GLAZED OPENINGS PROTECTED FROM WIND-BOURNE DEBRIS. GLAZED OPENING PROTECTION FOR WIND-BORNE DEBRIS SHALL MEET THE REQUIREMENTS OF THE LARGE MISSILE TEST OF ASTM E 1996 AND OF ASTM E 1886, SSTD 12, ANSI/DASMA 115 (FOR GARAGE DOORS) OR TAS201, 202 AND 203 . (FRC 2004, SECTION R301.2.1.2)

INDEX OF DRAWINGS

WOOD TRUSS

REVISIONS :

08-14-07 REV. CODE INFORMATION

Maronda Homes
(407) 321-0064 4005 MARONDA WAY SANFORD, FLORIDA

9TM02301 JAX
23-1 9TM

FLORIDA:
THIS STRUCTURE WAS DESIGNED IN ACCORDANCE AND MEETS THE REQUIREMENTS OF SECTION R301 OF THE FLORIDA BUILDING CODE 2004 , RESIDENTIAL, AND 2005, 2006 SUPPLEMENT FOR 125 MPH - 3 SEC. GUST, HD, EXPOSURE B, ENCLOSED BUILDING. ALL CONNECTORS HAVE BEEN CHECKED TO WITHSTAND ALL APPLICABLE LOADS.

P:\TRUSSES_05\westcott\25\wcte-125.000

AMERICANA COVER SHEET

WESTCOTT

ELEVATION "E"

DRAWN BY: GARAGE: RIGHT

RELEASE DATE: 09-01-04 125 MPH

13-46.00

Maronda Systems
4005 Maronda Way
Sanford, FL 32771
(407)321-0064

Elmer Bergman, P.E.
License No. 50158

MAR 26 2008

SHEET:

0e

PLOT DATE: 12 DEC 2007

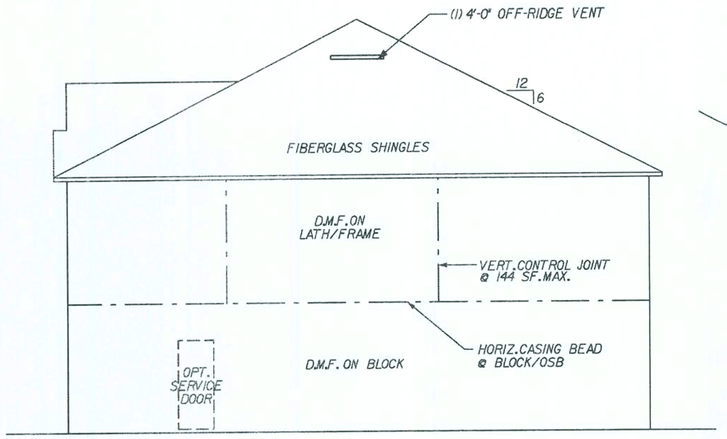

B RIGHT SIDE ELEVATION
SCALE: 1/8" = 1'-0"

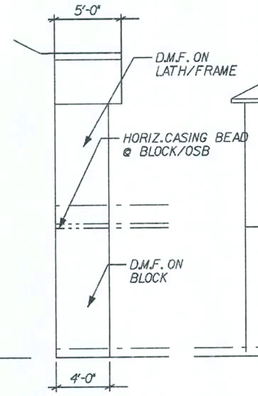

C FRONT ENTRY
DE ELEVATION
SCALE: 1/8" = 1'-0"

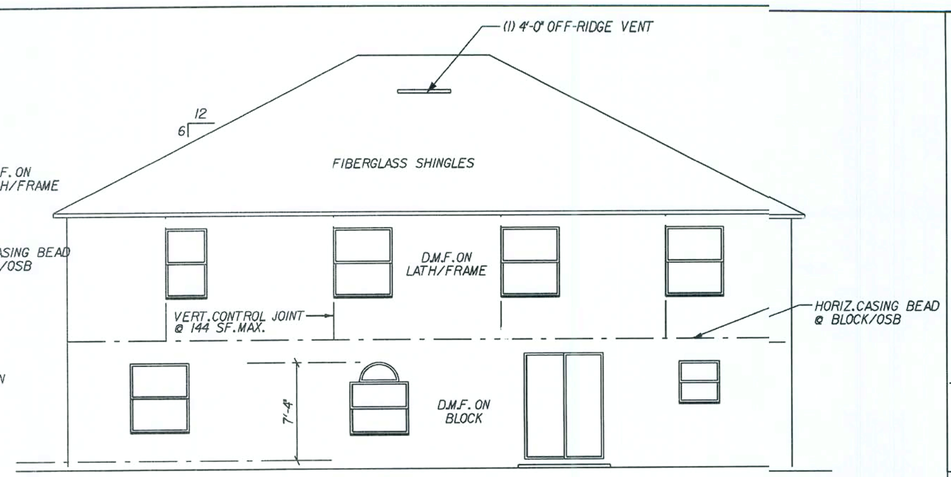

E REAR ELEVATION
SCALE: 1/8" = 1'-0"

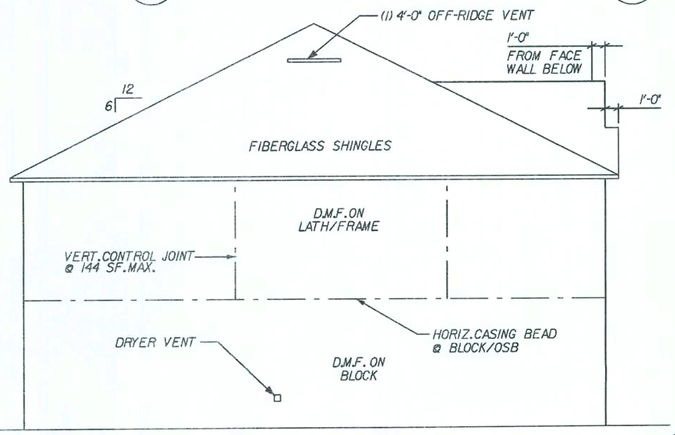

D LEFT SIDE ELEVATION
SCALE: 1/8" = 1'-0"

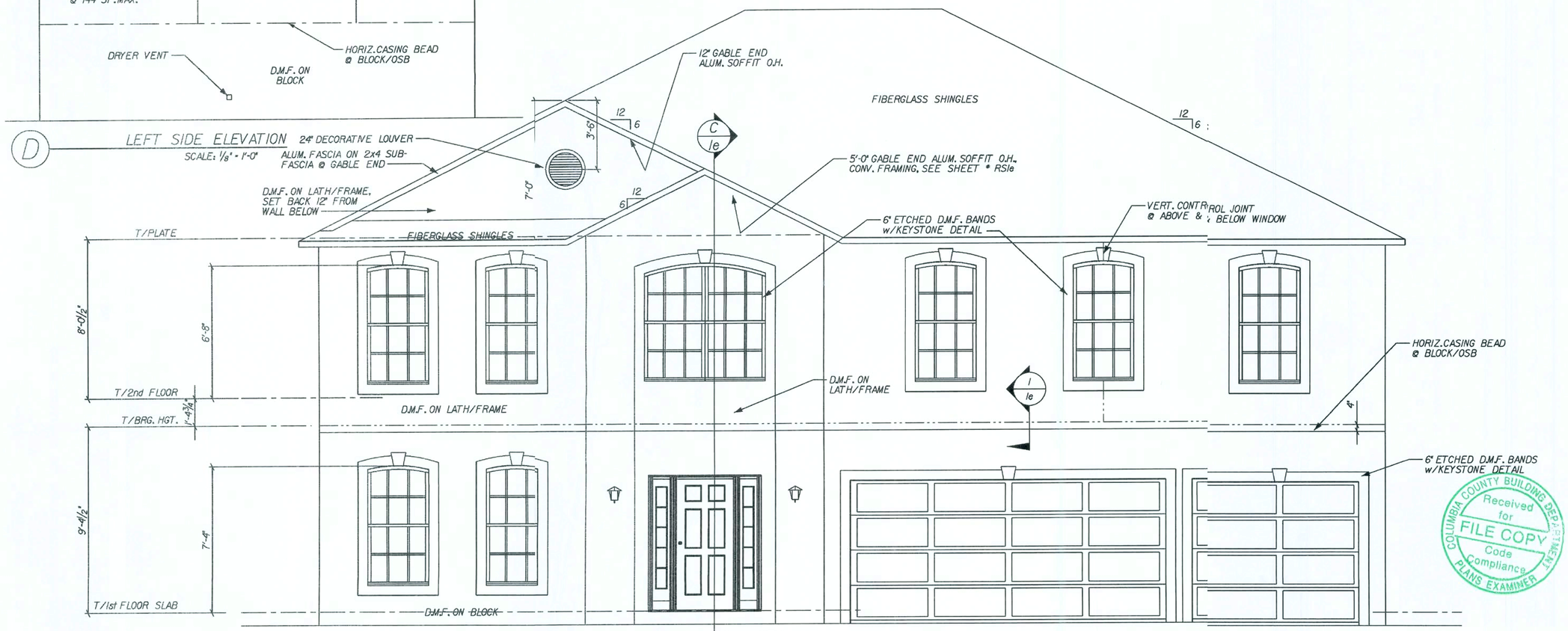

A FRONT ELEVATION
SCALE: 1/4" = 1'-0"

GENERAL ELEVATION NOTES:

1. DMF - DECO MASONRY/STUCCO FINISH SHALL COMPLY WITH THE REQUIREMENTS OF ATSM C926 AND C1063.
2. EAVE & GABLE OVERHANGS 12" ALUM FASCIA AND SOFFITS. PLUMB CUT WITH LEVEL RETURNS.
3. 7/8" MIN. THICKNESS DMF OVER LATH/FRAME AND 1/2" MIN. THICKNESS OVER BLOCK
4. DMF/STUCCO INSTALLED OVER PAPER-BACKED LATH AND HOUSEWRAP @ ALL EXTERIOR WOOD FRAME CONSTRUCTION.

REVISED 01-05-06

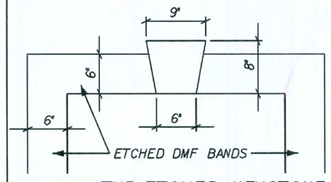

TYP. ETCHED KEYSTONE
SCALE: 3/4" = 1'-0"

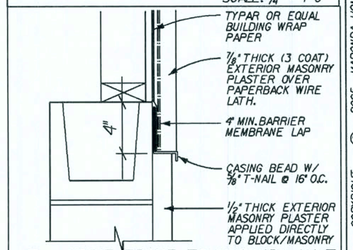

1 HORIZ. FRAME TO MASONRY JOINT
REVISED 12-11-06 SCALE: N.T.S.

REVISIONS :
08-01-06 REV. STUCCO DETAIL
09-21-07 DEL. VINYL SIDING

Maronda Homes
(407) 321-0064 4005 MARONDA WAY SANFORD, FLORIDA

FLORIDA: THIS STRUCTURE WAS DESIGNED IN ACCORDANCE AND MEETS THE REQUIREMENTS OF THE FLORIDA BUILDING CODE 2004 : RESIDENTIAL AND 2005, 2006 SUPPLEMENT

AMERICANA EXT. ELEVATIONS

WESTCOTT

ELEVATION "E"

DRAWN BY: GARAGE: RIGHT
RELEASE DATE: 09/01/04

Maronda Systems
4005 Maronda Way
Sanford, FL 32771
(407)321-0064

Elmer Bergman, P.E.
License No. 50158

MAR 26 2008

COLUMBIA COUNTY BUILDING DEPARTMENT
Received for FILE COPY
Code Compliance
PLANS EXAMINER

SHEET:
1e

PLOT DATE: 12 DEC 2007 13:46:01 p:\1houses_05\westcott\st01\wcte001

FLORIDA BUILDING CODE 2004 : RESIDENTIAL

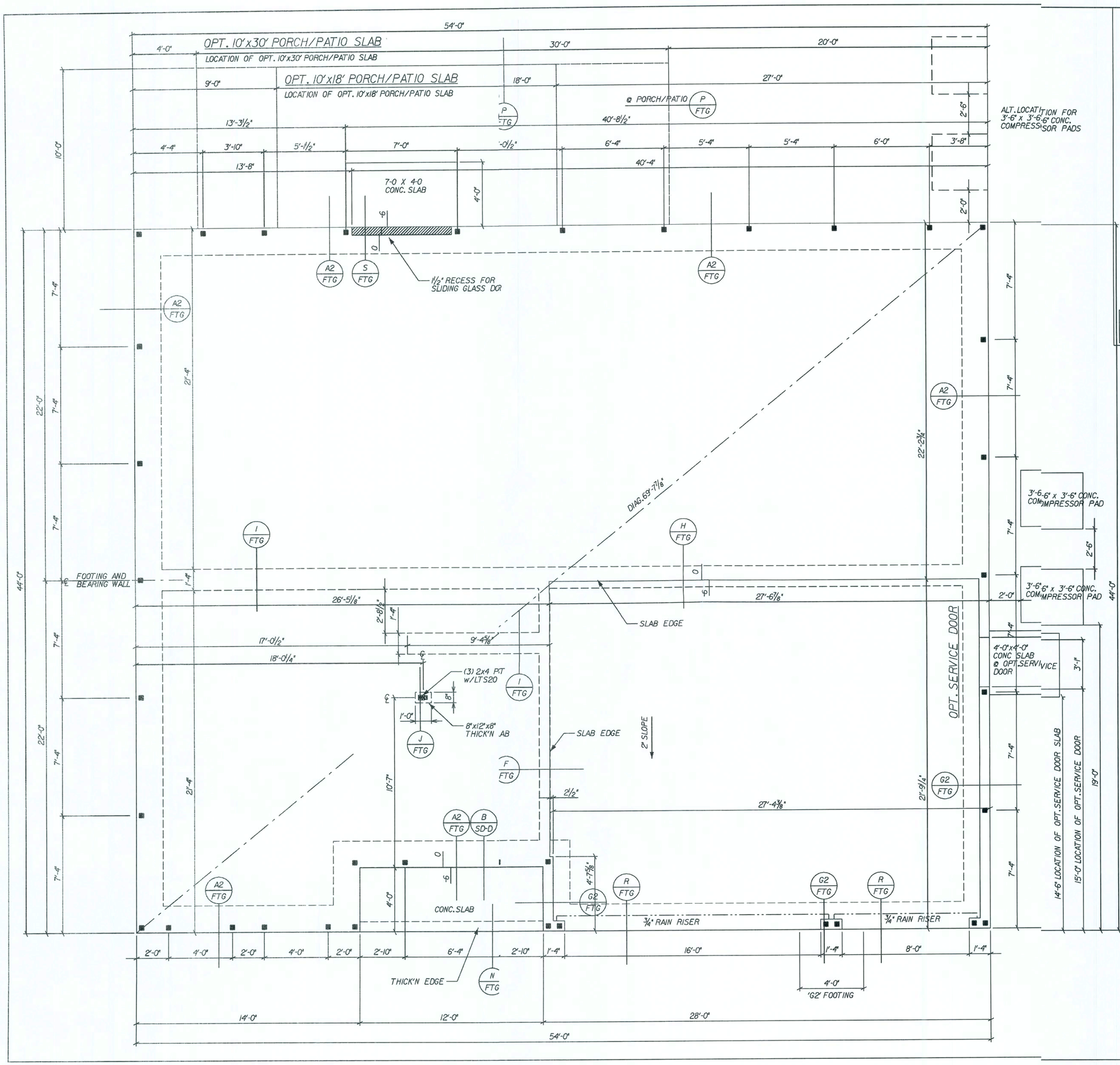

GENERAL FOUNDATION NOTES:

ALL FOOTING REBAR SHALL BE CONTINUOUS (2) #5 BARS GRADE 40 STEEL w/ 3" MIN. COVERAGE, U.N.O.

ALL VERTICAL REBAR, DOWN REBAR, DOWEL REBAR AND BOND BEAM REINFORCEMENT SHALL BE #5 BARS GRADE 40 STEEL

PLUMBING PASSING UNDER OR THROUGH A FOOTING SHALL BE ENCASED IN A PIPE TWO (2) SIZES LARGER THAN THE PLUMBING PIPE.

■ - INDICATES FILLED CELL WITH REBAR
□ - INDICATES FILLED CELL WITHOUT REBAR

ALL CONCRETE GROUTED CELLS FILLED w/ 3000 psi CONCRETE SHALL BE CLEAR UNOBSTRUCTED CONTINUOUS 3" x 3" MIN. CELLS w/ (1) #5 BAR GRADE 40 STEEL TIED AT FOOTING LINTEL STEEL. PROVIDE INSPECTION HOLE AT BOTTOM OF GROUTED CELL STACK.

TYPICAL CONCRETE SLAB: 3½" DEEP POURED 2500 psi CONCRETE SLAB w/ 6x6 10/ WIRE OR FIBER MESH ON VISQUEEN VAPOR BARRIER w/ ALL JOINTS TAPED OVER CLEAN COMPACTED (2000 psf, MIN.) TERMITE TREATED FILL.

FOR INSTALLATION OF GROUND ROD, SEE TYP. CONC. ENCASED ELECTRODE DETAIL SHEET# FTG

SEE DRAWING # FPI FOR UNDERGROUND PLUMBING AND MECH. CHASES FOR LOCATIONS

REVISIONS :
04-24-06 REVISED NOTE AT GARAGE DOOR
07-27-06 ADDED DOOR PAN DETAIL MARKER
08-14-07 REV. CODE INFORMATION

Maronda Homes
(407) 321-0064 4005 MARONDA WAY SANFORD, FLORIDA

FLORIDA
THIS STRUCTURE WAS DESIGNED IN ACCORDANCE WITH THE REQUIREMENTS OF SECTION R301 OF THE FLORIDA BUILDING CODE 2004 , RESIDENTIAL AND 2005, 2006 SUPPLEMENT FOR 125 MPH - 3 SEC. GUST. ALL CONNECTORS HAVE BEEN CHECKED TO WITHSTAND ALL APPLICABLE LOADS.

AMERICANA
FOUNDATION PLAN
WESTCOTT
ELEVATION "A", "B" & "E"
GARAGE: RIGHT
125 MPH
DRAWN BY:
RELEASE DATE: 09/01/04
13-46-02
PLOT DATE: 12 DEC 2007
p:\f:\houses_05\westcott\25\wct-125.002

Maronda Systems
4005 Maronda Way
Sanford, FL 32771
(407)321-0064

Elmer Bergman, P.E.
License No. 50158
MAR 26 2008

COLUMBIA COUNTY BUILDING DEPARTMENT
Received for FILE COPY
Code Compliance
PLANS EXAMINER

SHEET:
2

FLORIDA BUILDING CODE 2004 : RESIDENTIAL

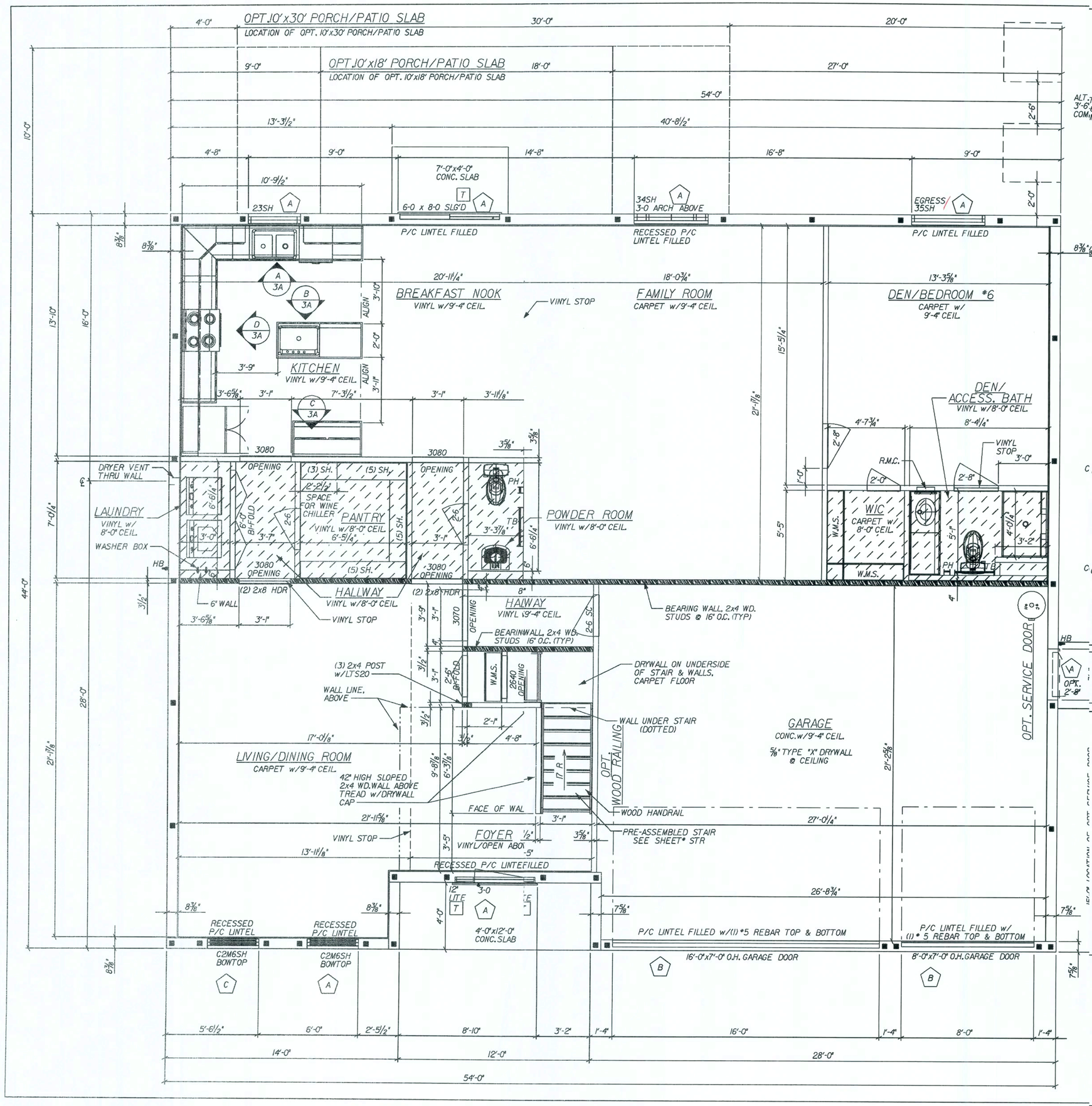

GENERAL FIRST FLOOR NOTES:

ALL EXTERIOR WALLS SHALL BE CONSIDERED SHEAR WALLS MINUS ALL WINDOW AND DOOR OPENINGS.

EXTERIOR WALLS TO BE 7 5/8" CONCRETE BLOCK w/ P.T.FURRING STRIPS IN A/C AREA, TOTAL WIDTH = 8 3/8"

EXTERIOR OPENING DIMENSIONS ARE TO FACE OF MASONRY OPENING.

INTERIOR LOAD BEARING WALLS TO BE 2x4 WOOD FRAME WALLS w/ STUDS @ 16" O.C. SEE STRUCTURAL WALL SCHEDULE SHEET # TRI

INTERIOR NON-LOAD BEARING WALLS TO BE NOMINAL 3 5/8" MTL STUD, 25 ga., U.N.O.

ALL WOOD NOT SEPERATED FROM AND/OR IN DIRECT CONTACT WITH CONCRETE OR MASONRY SHALL BE "PRESSURE TREATED WOOD"

SEE LINTEL SHEET FOR LINTEL SIZES OVER WINDOWS AND DOORS. PRECAST LINTELS BY CAST-CRETE.

ALL COMPOSITE BEAMS OVER WINDOW AND DOOR OPENINGS ARE TO BE 8" NOMINAL WIDTH AND 16" NOMINAL HEIGHT, U.N.O. THE 16" NOMINAL HEIGHT SHALL CONSIST OF AN 8" TOP COURSE (BOND BEAM BLOCK) FILLED w/ 3000 psi CONCRETE w/ (1) GRADE 40 CONTINUOUS HORZ. #5 REBAR AND AN 8" HIGH STRENGTH PRECAST LINTEL LOWER COURSE WHICH SHALL BE UNFILLED, U.N.O. FOR FILLED PRECAST LINTELS, USE 3000 psi CONCRETE w/ 3/8" AGGREGATE. FOR REINFORCED PRECAST LINTELS, USE GRADE 40 REINFORCING STEEL.

PROVIDE SAFETY GLAZING AT: T = TEMPERED
- ALL WINDOWS OVER BATH TUBS.
- ALL WINDOWS WITHIN 24" OF A DOOR SWING.
- ALL SLIDING GLASS DOORS.
- ALL FIXED GLASS LITES OVER 30 SQ.FT.
- ALL LITES WITHIN 18" OF THE FLOOR AND INDIVIDUAL PANE GREATER THAN 9 SQ.FT.
- ALL SHOWER ENCLOSURES.

PROVIDE AFCIs (arc-fault circuit Interrupters) IN ALL DWELLING UNIT BEDROOMS PER NEC. SECTION 210-12.

THE A/C DISCONNECT WILL BE LOCATED WITHIN 3 FEET OF THE COMPRESSOR.

SEE SHEET # WL1 FOR WINDOW AND LINTEL SCHEDULES AND DETAILS

PROVIDE HEADER w/ (1) 2x4 JACK AND (1) 2x4 STUD, EACH SIDE OF OPENING (NO STRAPPING REQUIRED, U.N.O.) HDR TO BE NO.2 SYP SEE PLAN FOR SIZE

ALL DRYWALL TO BE 1/2" THICK, U.N.O.

SC DOOR = MIN. 1 3/8" THICK SOLID CORE DOOR

REVISED 10-10-07

SQUARE FOOTAGE:

1st FLOOR LIVING	1722 SQ. FT.
2nd FLOOR LIVING	2179 SQ. FT.
TOTAL LIVING	3901 SQ. FT.
GARAGE AREA	606 SQ. FT.
COVERED ENTRY	48 SQ. FT.
TOTAL AREA	4555 SQ. FT.

REVISED 10-11-06

OPENING PRESSURES 125mph:

A	B	E
+28.1 / -30.5	+23.7 / -27.6	+24.2 / -27.1
C	D	
+28.1 / -37.6	+24.9 / -29.7	

REVISED 09-12-07

ALL SWING DOORS IN BLOCK USE 2x DOOR BUCK DETAIL D/SD-D

COLUMBIA COUNTY BUILDING DEPARTMENT Received for FILE COPY Code Compliance PLANS EXAMINER

REVISIONS:
12-19-06 REV. SERVICE DOOR SWING
08-14-07 REV. CODE INFORMATION

Maronda Homes
4005 MARONDA WAY SANFORD, FLORIDA (407) 321-0064

FLORIDA
THIS STRUCTURE WAS DESIGNED IN ACCORDANCE WITH THE REQUIREMENTS OF SECTION R301 OF THE FLORIDA BUILDING CODE 2004 RESIDENTIAL AND 2005, 2006 SUPPLEMENT FOR 125 MPH - 3 SEC. GUST, EXPOSURE B, ENCLOSED BUILDING. ALL CONNECTORS SHALL BE RATED TO WITHSTAND ALL APPLICABLE LOADS.

AMERICANA FIRST FLOOR PLAN

WESTCOTT

ELEVATION "E"

GARAGE: RIGHT

125 MPH

DRAWN BY: 09/01/04

RELEASE DATE:

13-46.03

Maronda Systems
4005 Maronda Way
Sanford, FL 32771
(407)321-0064

Elmer Bergman, P.E.
License No. 50158

MAR 26 2008

SHEET: 3e

PLOT DATE: 12 DEC 2007

p:\7houses_05\westcott\125\wcte-125.003

FLORIDA BUILDING CODE 2004 : RESIDENTIAL

FASTENERS SCHEDULE USING 3/16" X 2 1/4" TAPCONS THROUGH BUCK INTO BLOCK

NOTE 1) 1/2 WIDE: 2 FASTENERS IN HEADER-JAMB
NOTE 2) 2 WIDE: 2 FASTENERS IN HEADER-JAMB
NOTE 3) 3 WIDE: 3 FASTENERS IN HEADER-JAMB
NOTE 4) 2 HIGH: 2 FASTENERS IN EA. SIDE JAMB
NOTE 5) 3,4,OR 5 HIGH: 3 FAST. EA. SIDE JAMB
NOTE 6) 6 HIGH 26 3/4": 4 FASTENERS IN EACH SIDE JAMB
NOTE 7) 438 WINDOW INTO FRAME OPENING: #10 X 1 3/4" SCREWS
NOTE 8) SGD FASTENED WITH: #10 1 3/4": PANHEAD ALL HOLES SILLS 3/16" X 1 3/4" ANCHORS EVERYHOLE

WINDOW NOTES

F.O. WIDTH IS FROM JACK TO SILL.
F.O. HEIGHT IS FROM SILL TO BEAM.
M.O. WIDTH IS FROM BLOCK TO BLOCK.
M.O. HEIGHT IS FROM LIP OF SILL TO PRECAST.
1st. DIMENTION IS ALWAYS WIDTH.
UNIT OF MEASURE IS INCH.

ATTENTION

SCHEDULES FOR NORANDEX WINDOW FASTENERS AND CAST-CRETE LINTELS AS SHOWN, ARE TAKEN DIRECTLY FROM TABLES SUPPLIED BY THE RESPECTIVE MANUFACTURERS, AND ARE PROVIDED FOR CONVENIENCE ONLY.

NORANDEX SERIES (MO)437-(FO)438 WINDOW SIZE CHART

SERIES 500/502 SGD DOOR OPENINGS

SIZE	M.O.	FAST.		SIZE	M.O.	FAST.	
6068	75 1/2 X 81 3/4	8		6080	75 1/2 X 97 3/4	8	

SERIES (MO)437 - (FO)438 OPENINGS

SIZE	SINGLE M.O.	FAST.	DOUBLE M.O.	FAST.	SIZE	SINGLE F.O.	FAST.	DOUBLE F.O.	FAST.
23	37 3/4 X 38 3/8	2,5							
					25	36 1/2 x 62 1/2	7		
35	53 7/8 X 63	2,5			35	52 5/8 x 62 1/2	7		

HALF ROUND MULLED TO UNIT - SERIES (MO)437 - (FO)438 OPENINGS

SIZE	SINGLE M.O.	FAST.	SIZE	SINGLE F.O.	FAST.
34 w/ 3'-0" CT	53 7/8 X 71 5/8	2,5,7			
			6448 w/ 64 CT	63 1/2 X 80	7

SINGLE HUNG ROUNDTOP - SERIES (MO)437 - (FO) 438 OPENINGS

SIZE	SINGLE M.O.	FAST.	SIZE	SINGLE F.O.	FAST.	DOUBLE F.O.	FAST.
C2M6	37 3/4 X 74	1.5	C2M6	36 1/2 X 71 1/2	7	73 1/2 X 71 1/2	7

THE SPECIFIED LINTELS ON SHEET WLI ARE MANUFACTURED BY CAST-CRETE CORP. ALTERNATE MANUFACTURED LINTELS ARE AVAILABLE "BY OTHERS". SOLE AND FULL RESPONSIBILITY IS RETAINED BY THE SUB-CONTRACTOR IN THE SELECTION OF THE ALTERNATE LINTELS AS HAVING EQUAL TO OR GREATER THAN THE ACTUAL GRAVITY AND UPLIFT LOADS, THAT ARE LISTED ON THIS HOUSE SPECIFIC WLI LINTEL SCHEDULE.

REVISED 04-02-07

MATERIALS

1. f'c precast lintels = 3500 psi.
2. f'c prestressed lintels = 6000 psi.
3. f'c grout = 3000 psi w/ maximum 3/8" aggregate.
4. Concrete masonry units (CMU) per AST C90 w/minimum net area compressive strength = 1900 psi.
5. Rebar provided in precast lintel per ASTM A615 GR60. Field rebar per ASTM A615 GR40 or GR60.
6. Prestressing strand per ASTM A416 grade 270 low relaxation.
7. 7/32 wire per ASTM A510.
8. Mortar per ASTM C270 type M or S.

TYPICAL GARAGE DESIGNATION

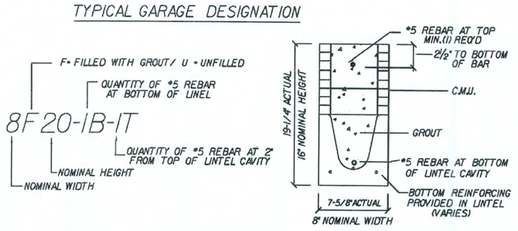

TYPICAL DESIGNATION

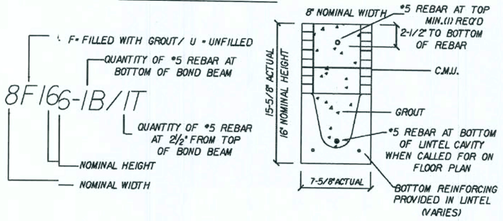

REVISED 12/29/04

CAST-CRETE LINTEL SCHEDULE

LINTEL NO.	LENGTH	TYPE	APPLIED LOADS (PLF) GRAVITY	APPLIED LOADS (PLF) UPLIFT	SAFE LOADS GRAVITY	SAFE LOADS UPLIFT	COMMENT
1	7'-0"	8RF30-0B/IT	939	462	5743	2442	RECESSED
2	4'-6"	8RU22-0B/IT	1800	455	4946	4224	RECESSED
3	4'-6"	8RU22-0B/IT	1800	455	4946	4224	RECESSED
4	4'-6"	8U24-0B/IT	1597	622	4576	4292	-
5	7'-6"	8F16-6-0B/IT	1682	447	2635	1634	-
6	5'-10"	8RF22-0B/IT	1548	622	2649	3176	RECESSED
7	5'-10"	8F24-0B/IT	1548	622	6034	3295	-
8	9'-4"	8F36-6-1B/IT	1800	455	6390	2842	GARAGE DOOR
9	17'-4"	8F36-6-1B/IT	1800	455	2047	1470	GARAGE DOOR
S1	4'-6"	8U24-0B/IT	138	177	4576	4292	@ OPT. GARAGE SERVICE DR.
P1	10'-6"	8F8-6-0B/IT	107	44	643	530	@ OPT. PORCH
P2	14'-8"	8F8-6-0B/IT	190	210	458	239	@ OPT. PORCH
P3	14'-8"	8F8-6-0B/IT	190	210	458	239	@ OPT. PORCH
P4	10'-6"	8F8-6-0B/IT	107	44	643	530	@ OPT. PORCH

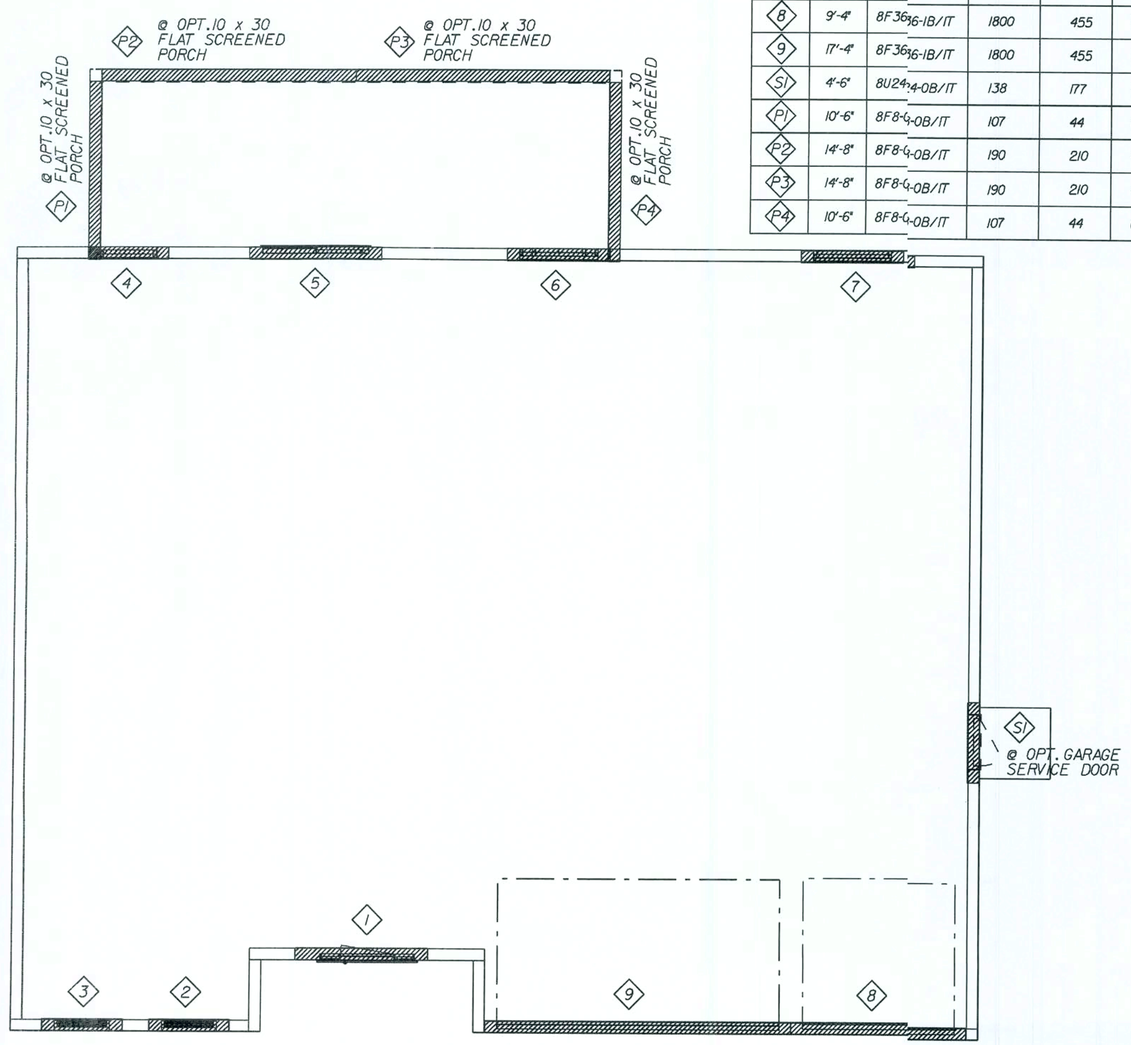

REVISIONS:
09-15-06 REV. LINTEL #5
06-11-07 REV. LINTEL #1 FROM 22" -> 30" DEEP
08-14-07 REV. CODE INFORMATION

Maronda Homes
(407) 321-0064 4005 MARONDA WAY SANFORD, FLORIDA

FLORIDA: THIS STRUCTURE WAS DESIGNED IN ACCORDANCE WITH THE REQUIREMENTS OF SECTION R301 OF THE FLORIDA BUILDING CODE 2004 : RESIDENTIAL AND 2005, 2006 SUPPLEMENT FOR 125 MPH - 3 SEC. GUST, UNEXPOSURE B, ENCLOSED BUILDING. ALL COMPONENTS AND CLADDING DESIGNED TO WITHSTAND ALL APPLICABLE LOADS.

P:\NDUSES.05\westcott\125\wcte-125w11

AMERICANA | WINDOW/LINTEL

WESTCOTT

ELEVATION "E"

DRAWN BY: | GARAGE: RIGHT

RELEASE DATE: 09/01/04 | 125 MPH

13:46:04

PLOT DATE: 12 DEC 2007

Maronda Systems
4005 Maronda Way
Sanford, FL 32771
(407)321-0064

Elmer Bergman, P.E.
License No. 50158
MAR 26 2008

SHEET: WLIe

FLORIDA BUILDING CODE 2004 : RESIDENTIAL

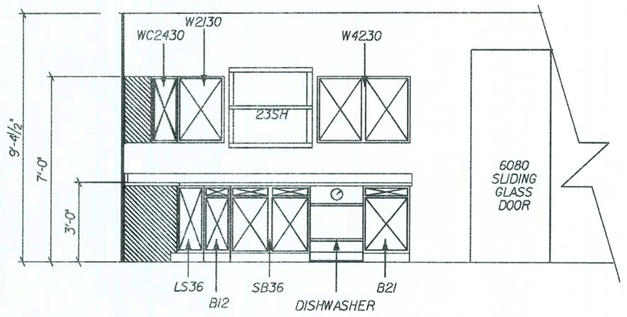

A KITCHEN ELEVATION

ON REAR FACE OF ISLAND CABINETS INSTALL ¼" VENEER PANEL OVER ¼" PLYWOOD BACKER w/ (2) OUTSIDE CORNER PEICES

ISLAND > 48" ADD (1) BATTON MOLDING AT PANEL JOINT

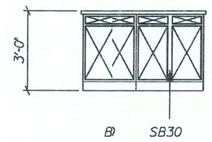

B KITHEN ELEVATION

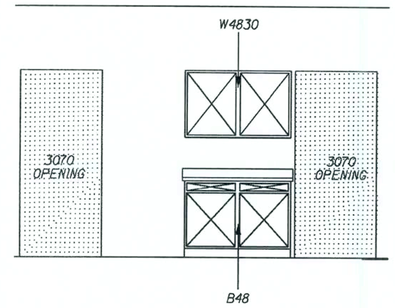

C KITCHEN ELEVATION

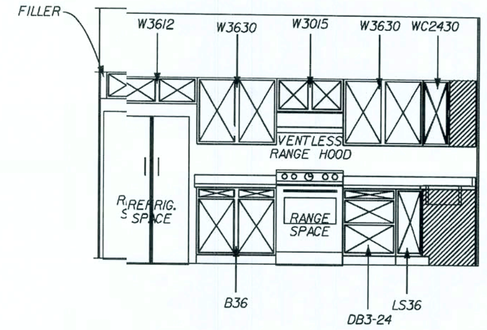

D KITCHEN ELEVATION

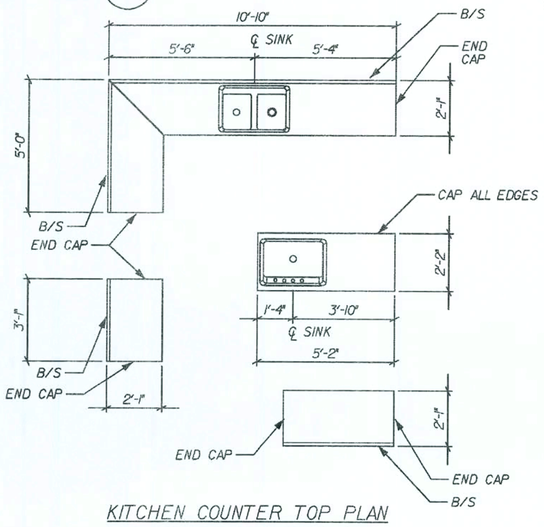

KITCHEN COUNTER TOP PLAN

FOR COUNTER TOP CONSTRUCTION ONLY. NOT FOR FIELD USE

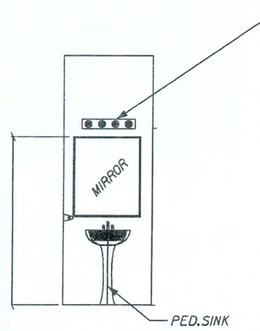

E ACCESS POWDER ROOM ELEVATION

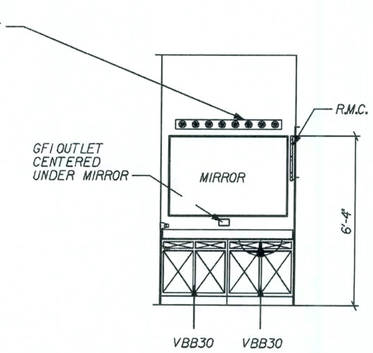

F DEN/ACCESS BATH ELEVATION

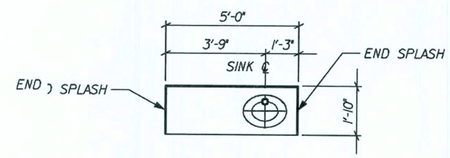

DEN/ACCESS BATH LAV TOP PLAN

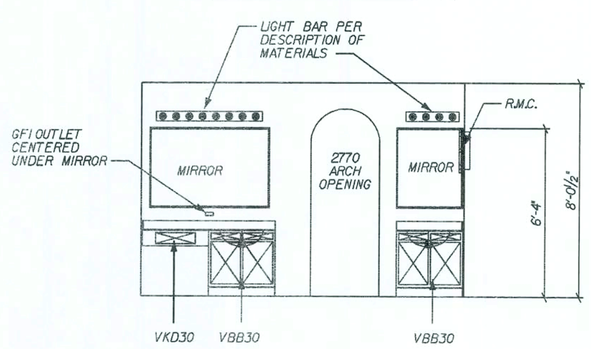

G MASTER BATH ELEVATION

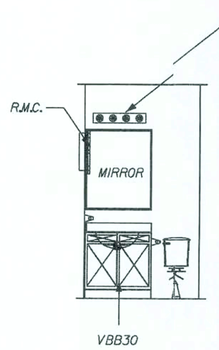

H BATH #2 ELEVATION

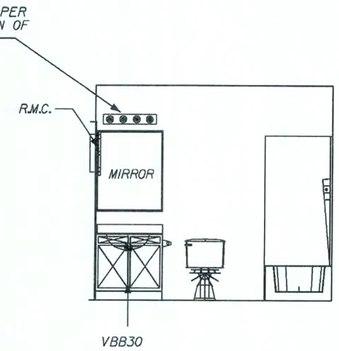

J BATH #1 ELEVATION

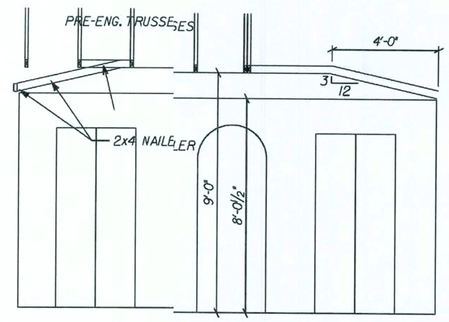

K MASTER BEDRM ELEV.

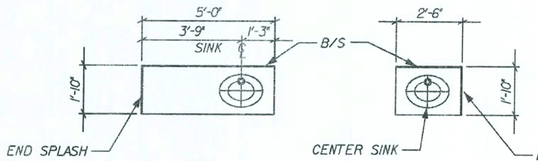

MASTER BATH LAV TOP PLAN

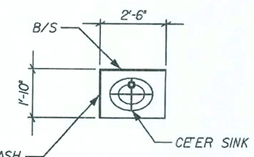

BATH #2 LAV TOP PLAN

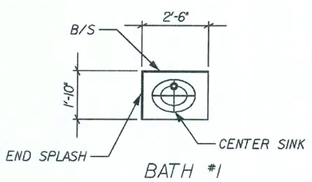

BATH #1 LAV TOP PLAN

REVISIONS :

09-15-06 REV. KITCHEN CABINETS/FILLERS

Maronda Homes

(407) 321-0064 4005 MARONDA WAY SANFORD, FLORIDA

FLORIDA: THIS STRUCTURE WAS DESIGNED IN ACCORDANCE WITH THE REQUIREMENTS OF THE FLORIDA BUILDING CODE 2004 : RESIDENTIAL AND 2005, 2006 SUPPLEMENT

AMERICANA INTERIOR ELEVATIONS

WESTCOTT

GARAGE: RIGHT

DRAWN BY:

RELEASE DATE: 09/01/04

13-4605

PLOT DATE: 12 DEC 2007

P:\1\houses_05\westcott\st\wct03a

SHEET: 3A

FLORIDA BUILDING CODE 2004 : RESIDENTIAL

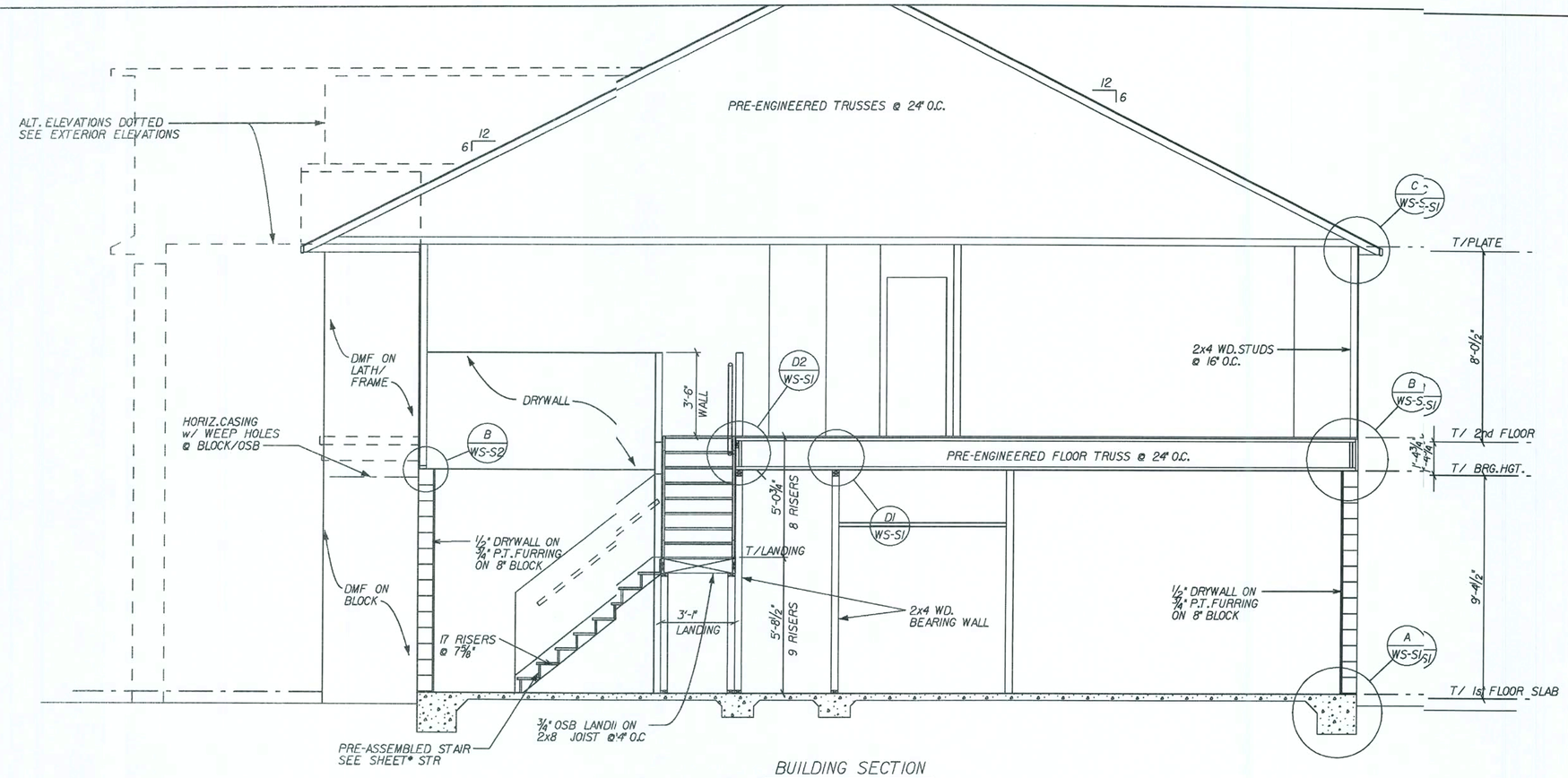

BUILDING SECTION

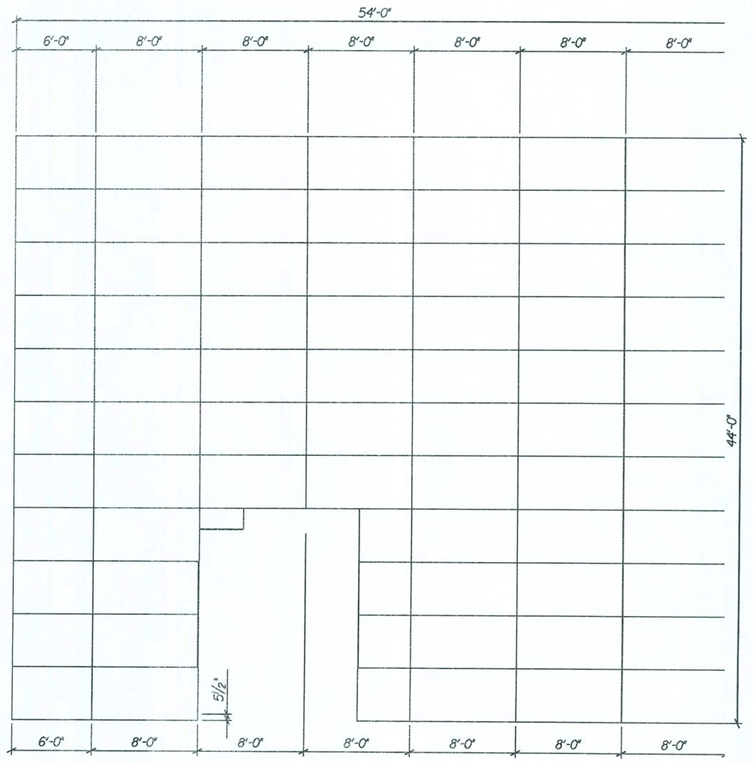

72 - 4x8 SHEETS OF SHEATHING

SECOND FLOOR SHEATHING LAYOUT

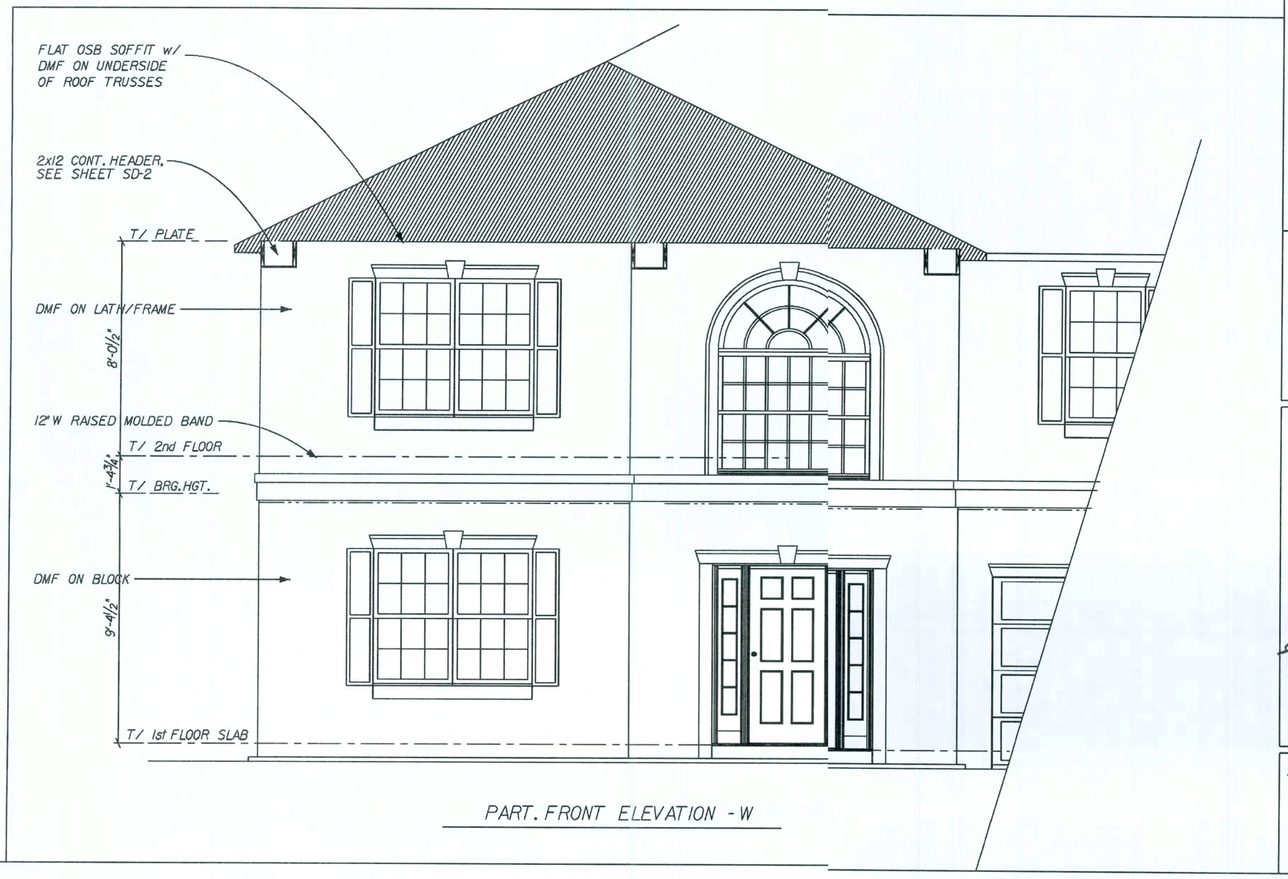

PART. FRONT ELEVATION - W

REVISIONS :
10-23-07 ADDED PART. ELEV. - W

Maronda Homes
(407) 321-0064 4005 MARONDA WAY SANFORD, FLORIDA

FLORIDA:
THIS STRUCTURE WAS DESIGNED IN ACCORDANCE WITH THE REQUIREMENTS OF THE FLORIDA BUILDING CODE 2004 : RESIDENTIAL AND 2005, 2006 SUPPLEMENT

p:\houses_05\westcott\std\wct.csu

AMERICANA | BLDG. CROSS SEC

WESTCOTT

ELEVATION "ALL"

GARAGE: RIGHT

DRAWN BY:

RELEASE DATE: 09/01/04

13:46:05

Maronda Systems
4005 Maronda Way
Sanford, FL 32771
(407)321-0064

Elmer Bergman, P.E.
License No. 50158

MAR 26 2008

SHEET:
CSU

PLOT DATE: 12 DEC 2007

FLORIDA BUILDING CODE 2004 : RESIDENTIAL

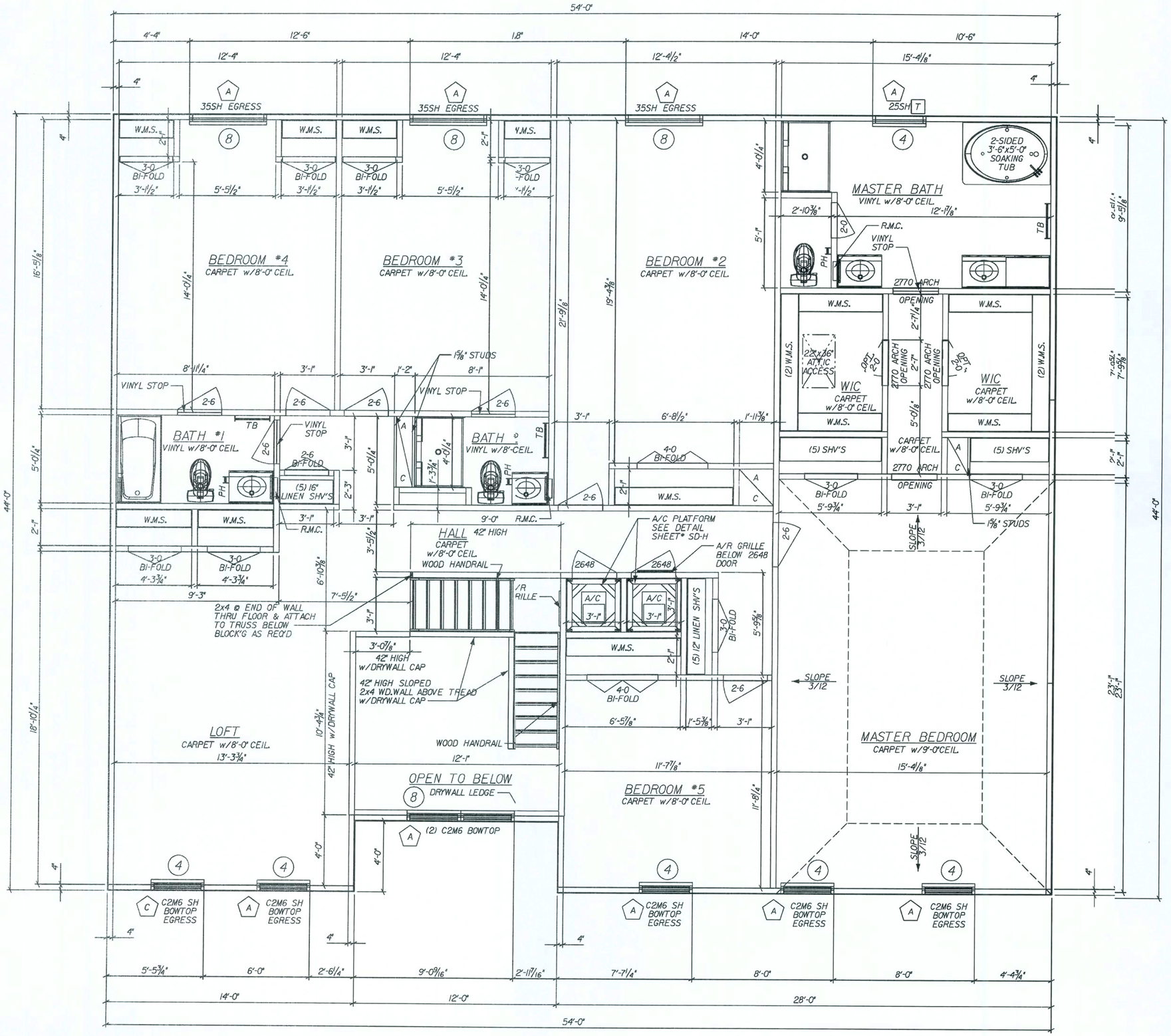

GENERAL SECOND FLOOR NOTES:

ALL EXTERIOR WALLS SHALL BE CONSIDERED SHEAR WALLS MINUS ALL WINDOW AND DOOR OPENINGS.

EXTERIOR WALLS TO BE 4" THICK, CONSISTING OF 2x4 #2 S.Y.P. STUDS w/ 7/16" OSB SHEATHING, TYPICAL, U.N.O.

EXTERIOR OPENING DIMENSIONS ARE TO FACE OF ROUGH OPENING

INTERIOR NON-LOAD BEARING WALLS TO BE NOMINAL 3 5/8" MT'L STUD, 25 ga. U.N.O.

PROVIDE SAFETY GLAZING AT: [T] = TEMPERED
- ALL WINDOWS OVER BATH TUBS.
- ALL WINDOWS WITHIN 24" OF A DOOR SWING.
- ALL SLIDING GLASS DOORS.
- ALL FIXED GLASS LITES OVER 30 SQ.FT.
- ALL LITES WITHIN 18" OF THE FLOOR AND IF LARGER THAN 9 SQ.FT.
- ALL SHOWER ENCLOSURES.

PROVIDE AFCIs (arc-fault circuit interrupters) IN ALL DWELLING UNIT BEDROOMS PER NEC, SECTION 210-12

ALL BEDROOM WINDOWS ARE CONSIDERED EGRESS UNLESS OTHERWISE NOTED

SEE SHEET # WL FOR WINDOW AND LINTEL SCHEDULES AND DETAILS

OPENING PRESSURES 125mph:

(A) +28.1 / -30.5	(B) +23.7 / -27.6	(E) +24.2 / -27.1
(C) +28.1 / -37.6	(D) +24.9 / -29.7	

TSH WINDOW HEADERS

(4)	3 1/2" x 4 7/8" TSH
(8)	3 1/2" x 8 5/8" TSH

REVISED 05-23-07

REVISED 09-12-07

REVISIONS :
05-23-07 REV. HEADER
08-14-07 REV. CODE INFORMATION

Maronda Homes
(407) 321-0064 4005 MARONDA WAY SANFORD, FLORIDA

FLORIDA STRUCTURE WAS DESIGNED IN ACCORDANCE AND MEETS THE REQUIREMENTS OF SECTION R301 OF THE FLORIDA BUILDING CODE 2004 - RESIDENTIAL AND 2005, CODE SUPPLEMENT FOR 125 MPH - 3 SEC. GUST. ALL CONNECTORS HAVE BEEN CHECKED TO WITHSTAND ALL APPLICABLE LOADS.

P:\Houses..05\westcott\125\wcte125.004

AMERICANA | SECOND FLOOR PLAN

WESTCOTT

ELEVATION "E"

DRAWN BY: | GARAGE: RIGHT

RELEASE DATE: 09/01/04 | 125 MPH

13:46:06

PLOT DATE: 12 DEC 2007

Maronda Systems
4005 Maronda Way
Sanford, FL 32771
(407)321-0064

Elmer Bergman, P.E.
License No. 50158

MAR 26 2008

SHEET: 4e

FLORIDA BUILDING CODE 2004 : RESIDENTIAL

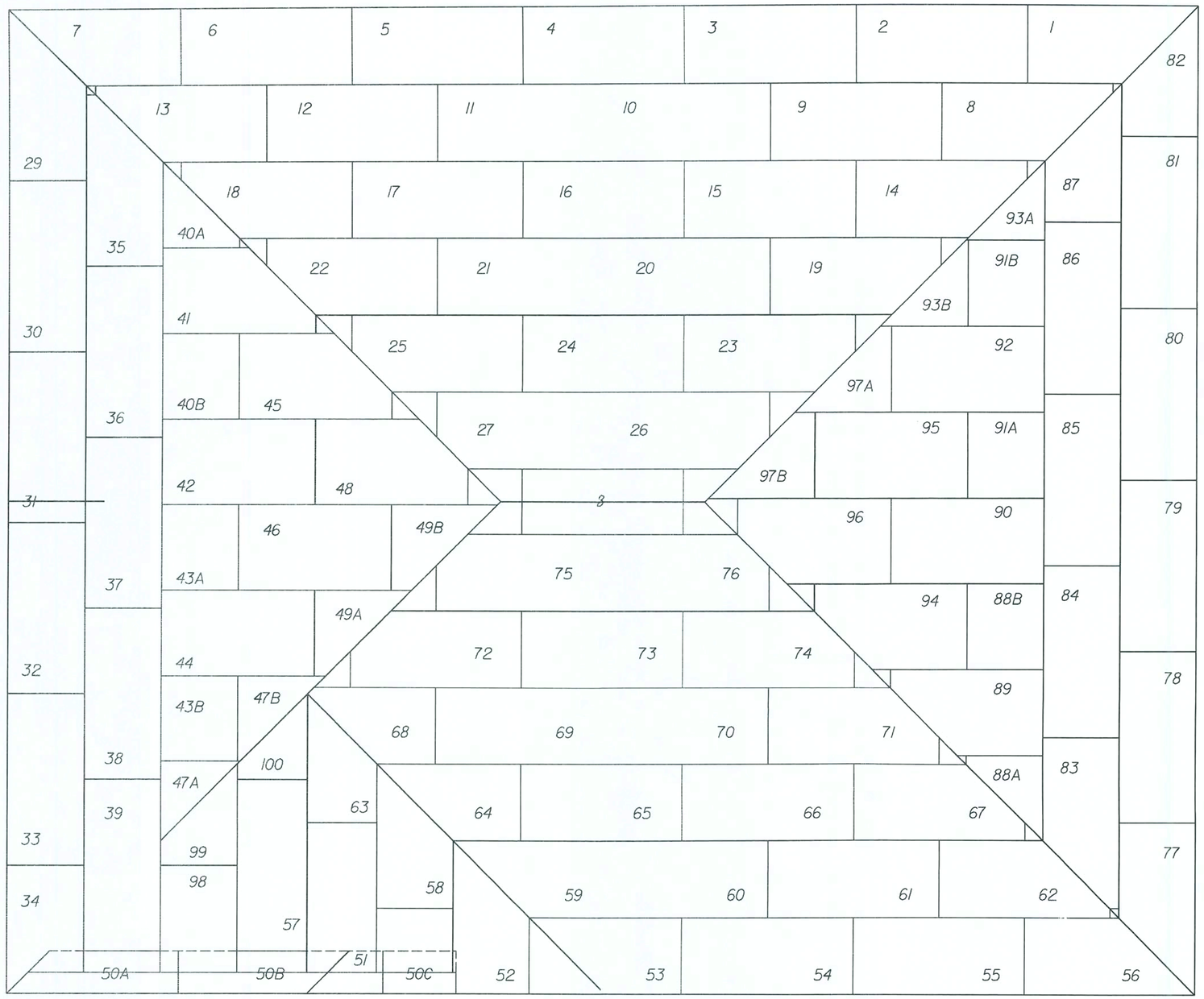

GENERAL ROOF NOTES:

7/16" OSB SHT'G w/ 8d RING/SCREW SHANK NAIL (AS PER R803.2.3.1) 4" O.C. EDGE & 6" O.C. FIELD, (3" O.C. @ GABLE END TRUSS) w/ CLIPS ON PRE-ENGINEERED TRUSSES @ 24" O.C.

TOTAL ROOF SHEATHING:

100 SHEETS

VENTILATION OF ATTIC SPACE: WESTCOTT-E

REQUIREMENTS:
TOTAL NET FREE VENTILATION AREA SHALL NOT BE LESS THAN 1/150 OF THE AREA OF SPACE VENTILATED.
(FBCR 2004, SECTION R806.2)

SOFFIT VENTILATION:
ALSCO - QUAD 4 VENTED SOFFIT (16" WIDE) = 26.1 si/LF
26.1 si / / 1.34' = 19.5 si/LF PER 12" wide soffit

CALCULATIONS:

MAIN ROOF:
2328 SF / / 150 = 15.52 SF VENTILATION REQUIRED

SOFFIT:
182 LF SOFFIT VENT @ 19.5 si/LF = 3549.0 si
3549.0 si / 144 si PER SF = 24.64 SF ACTUAL

NOTE:
SOFFIT ALONE SATISFIES FBCR 2004. RIDGE AND OFF-RIDGE VENTS SHOWN ON THE ELEVATION SHEET ARE TO BE INSTALLED AND ACT AS INCREASED VENTILATION ABOVE AND BEYOND THE CODE REQUIREMENTS.

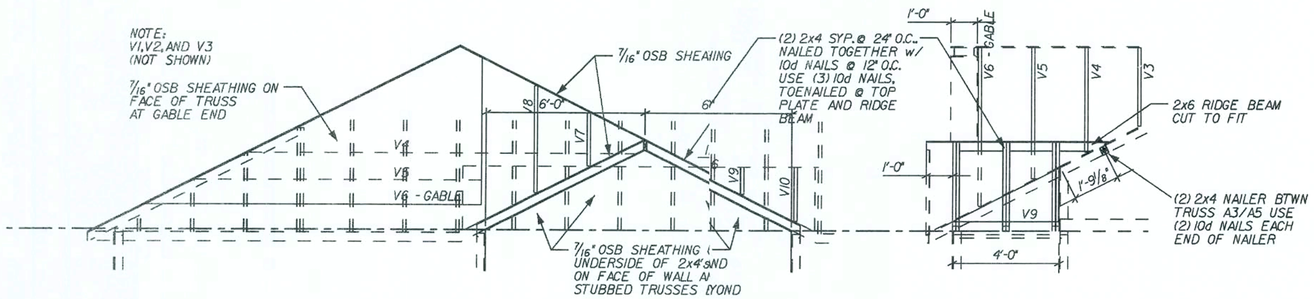

FRONT ELEVATION

SIDE ELEVATION

GABLE TRUSS RAMING DETAIL

2x4 STUD WALLS AND MAIN ROOF TRUSSES (DOTTED)

REVISIONS:
06-26-06 REVISED VENT. CALCS.
REVISED 05-07-07

Maronda Homes
(407) 321-0064 4005 MARONDA WAY SANFORD, FLORIDA

FLORIDA:
THIS STRUCTURE WAS DESIGNED IN ACCORDANCE AND MEETS THE REQUIREMENTS OF THE FLORIDA BUILDING CODE 2004 : RESIDENTIAL AND 2005, 2006 SUPPLEMENT

AMERICANA ROOF LAYOUT

WESTCOTT

ELEVATION "E"

GARAGE: RIGHT

DRAWN BY:

RELEASE DATE: 09/01/04

13:46x07

Maronda Systems
4005 Maronda Way
Sanford, FL 32771
(407)321-0064

Elmer Bergman, P.E.
License No. 50158

MAR 26 2008

SHEET:
RS/e

PLOT DATE: 12 DEC 2007

D:\Y\houses_05\westcott\sfd\wcfe.sl

FLORIDA BUILDING CODE 2004 : RESIDENTIAL

FLOOR FRAMING:

ITEM	DESCRIPTION
RIM BRD.	1¼" RIM BOARD
FA - FF	16" WOOD TRUSS

NOTE:
FOR SHEATHING LAYOUT
SEE SHEET * CSU

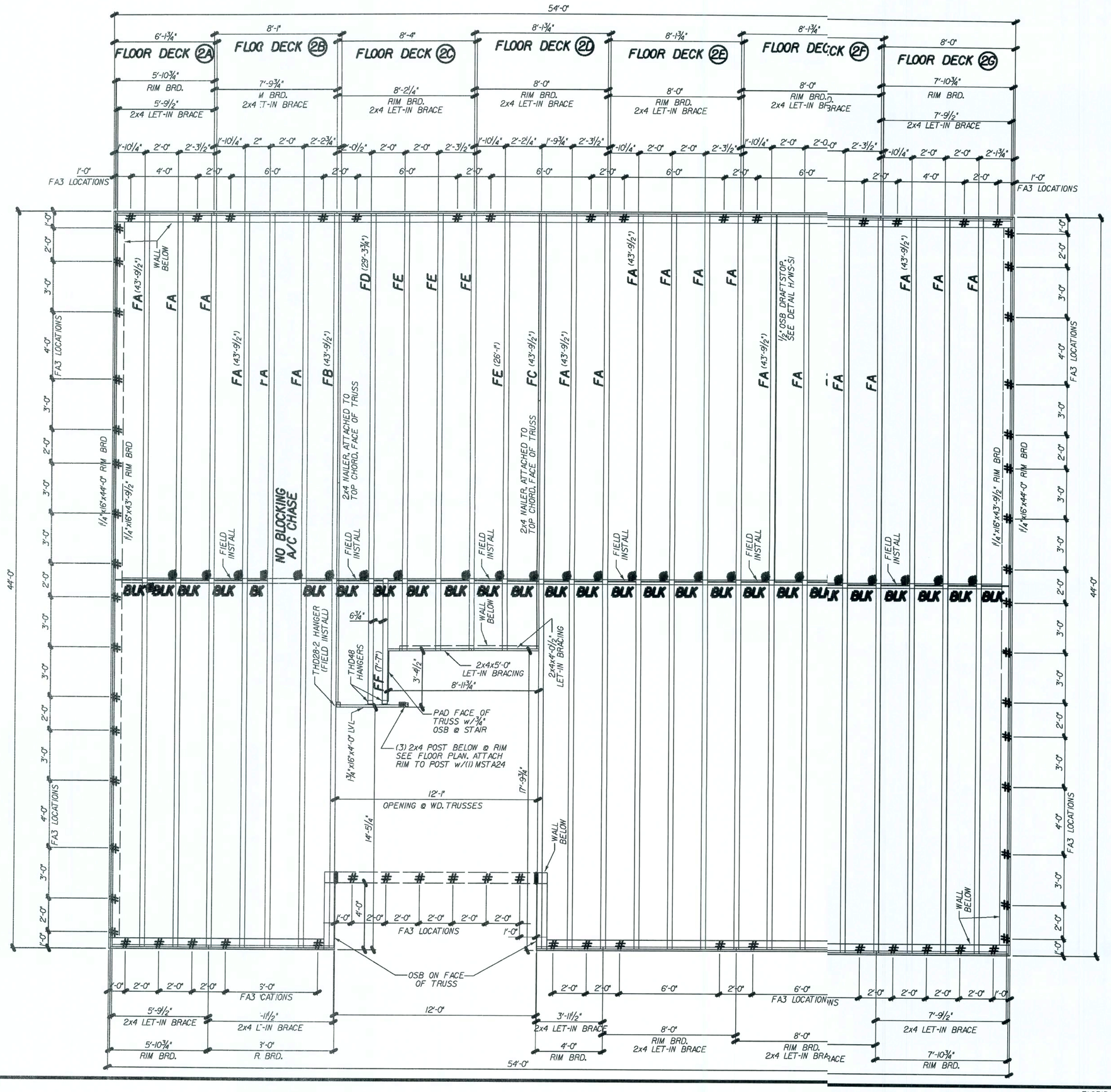

ERECTION/INSTALLATION NOTES

WARNING!:

THE ERECTION/INSTALLATION CONTRACTOR SHOULD PROVIDE ADEQUATE RIGGING (CRANE, TAGLINES, SPREADER BARS) FOR SUFFICIENT CONTROL DURING LIFTING AND PLACEMENT TO ASSURE SAFETY TO PERSONNEL AND TO PREVENT DAMAGE TO FLOOR DECK PANELS AND PROPERTY.

NOTE:

ALL FLOOR DECK PANELS UP TO 30': KEEP LINE ANGLE AT CRANING POINTS AT 60° OR LESS.

ALL FLOOR DECK PANELS 30' TO 60': ATTACH FLOOR DECK PANEL TO SPREADER BAR WITH LINES THAT SLOPE INWARD OR "TOE-IN". LINES THAT "TOE-OUT" COULD CAUSE FLOOR DECK PANEL TO BUCKLE.

FLOOR FRAMING NOTES:

REVISED 05-02-07 NAIL SPACING

16" DEEP WOOD FLOOR TRUSSES @ 24" O.C., U.N.O.

1¼" x 16" HIGH WOOD RIM BOARD

DESIGN LOADS:
- TC LIVE LOAD = 40 psf
- TC DEAD LOAD = 10 psf
- BC DEAD LOAD = 5 psf
- TOTAL LOAD = 55 psf

DEFLECTION:
- LL = L/360
- TL = L/240

ROOF LOADS ASSUMED TO BE BEARING ON PERIMETER WALLS ONLY.

FLOOR SHEATHING:
¾" T&G WOOD DECKING GLUED & NAILED w/ 7d x 2¼" SCREW SHANK NAIL @ 4" O.C. EDGES AND 8" O.C. FIELD (TYP.) or 16ga. x 1¾" STAPLE @ 2" O.C. EDGES AND 4" O.C. FIELD. SEE SHEET * FDO. GLUE MUST BE INCLUDED IN THE GROOVE OF EACH PANEL AND BTWN SHEATHING AND TRUSSES.

FLOOR CONNECTORS:

- FA3, RIM BOARD CONNECTION DETAIL * B/WS-S1 & LADDER TRUSS CONNECTION DETAIL * E/WS-S1
- TYPICAL ATTACHMENT TO BEARING WALL w/ (2) 10d NAILS, TOE-NAILED. SEE DETAIL D/WS-S1
- BLK SOLID WOOD FIRE BLOCKING SEE DETAIL F/WS-S1.
- LPTA, SEE DETAIL SHEET B/WS-S2
- TA14, SEE DETAIL SHEET E/WS-S2

REVISIONS:
- 06-9-07 REVISED PANEL IDS
- 08-22-07 ADDED LET-IN BRACE
- 10-31-07 CHANGED STRAPS AT TALL WALLS
- 03-13-08 REMOVED CRANING BLOCKS

08-14-07 REV. CODE INFORMATION

Maronda Homes
(407) 321-0064 4005 MARONDA WAY SANFORD, FLORIDA

FLORIDA,
THIS STRUCTURE WAS DESIGNED IN ACCORDANCE AND MEETS THE REQUIREMENTS OF SECTION R301 OF THE FLORIDA BUILDING CODE, 2004 RESIDENTIAL AND 2005, BUILDING CODE, 2004 RESIDENTIAL SECTION R301, GUST, W.D. EXPOSURE B, ENCLOSED BUILDING. ALL CONNECTORS HAVE BEEN CHECKED TO WITHSTAND ALL APPLICABLE LOADS.

g:\nlcc\boussv1\westcott\border\1gtf\wcd-125.112

AMERICANA | 2nd FLR FRAMING

WESTCOTT

ELEVATION 'ALL'

DRAWN BY: | GARAGE: RIGHT

RELEASE DATE: 09/01/04 | 125 MPH

14:59:23

Maronda Systems
4005 Maronda Way
Sanford, FL 32771
(407)321-0064

Elmer Bergman, P.E.
License No. 50158

MAR 26 2008

SHEET:
FT2

PLOT DATE: 13 MAR 2008

FLORIDA BUILDING CODE 2004 : RESIDENTIAL

GENERAL TRUSS NOTES:

PROVIDE TRUSS BRACING PER TRUSS ENGINEERING AND TPI/HIB-91

ROOF TRUSS LOADING:
16 psf : TOP CHORD LL
7 psf : TOP CHORD DL
10 psf : BOTTOM CHORD LL
10 psf : BOTTOM CHORD DL

43 psf : TOTAL LOAD

USP HARDWARE - 160%

MARK	PRODUCT CODE #	MAN.	FASTENERS	UPLIFT
N	16d NAILS - (2) TOP CHORD NAILS / (2) BOTTOM CHORD NAILS			
1	HUS 26	USP	(14) 16d HEADER (6) 16d TRUSS	1925
2	HUS 28	USP	(22) 16d HEADER (8) 16d TRUSS	2570
3	JUS 26	USP	(4) 10d HEADER (4) 10d TRUSS	1115
4	MP6F	USP	HEADER/STUD (6) 8d TYPE 1 JOIST/PLATE (6) 8d	605
5	MPAI & MPAIF	USP	HEADER/STUD (6) 8d JOIST/PLATE (6) 8d	660
6	SKH 26 L/R	USP	HEADER (6) 16d JACK (6) 10d X 1½"	1085
7	SKHH26 L/R	USP	HEADER (18) 16d JACK (12) 10d X 1½"	2190
8	SUH 26	USP	HEADER (6) 10d JACK (4) 10d X 1½"	725
9	SUH 28	USP	HEADER (8) 10d JACK (6) 10d X 1½"	800
10	THD26	USP	HEADER (18) 16d TRUSS (12) 10d X 1½"	2170
11	THD28	USP	HEADER (28) 16d TRUSS (16) 10d X 1½"	2330
12	THD28-2	USP	HEADER (28) 16d TRUSS (16) 10d X 1½"	2485
13	THDH28-3	USP	HEADER (36) 16d TRUSS (16) 10d X 1½"	2665
14	THD48	USP	HEADER (28) 16d TRUSS (16) 10d X 1½"	2485
15	THJ 26	CLEVELAND	H(PA7710)G-HEADER(16)16d JACK (5) 10d x1½"	1010
16	(2) MTW 12	USP	(14) 10d (14) 10d x 1-1/2	2060
17	(2) MUGT15	USP	THREADED ROD (11) 5/8 GIRDER (22) 10d X 1½"	8330
18	(2) RT16-2	USP	TOP PLATES (8) 8d TRUSS (8) 8d X 1½"	2320
19	(2) MSTA24	USP	(18) 10d (18) 10d	3280
20	(2) RT16	USP	TOP PLATES (8) 8d TRUSS (8) 8d X 1½"	2060
21	C44	USP	POST (6) 16d BEAM (6) 10d X 1½"	1000
22	FA3	USP	TOP (4) 10d X 1½" SIDE (2) 10d X 1½"	1155
23	HC520 CLIP	USP	PLATES (11) 8d STUD (6) 8d	445
24	HHCP2 CRNR CLIP	USP	TRUSS (10) 10d X 1½" PLATE (10) 10d X 1½"	800
25	HTA 20 ANCHOR	USP	(14) 10d X 1½"	1615
26	HTA 20(2) ANCHOR	USP	(13) 10d X 1½"	3230
27	HTW24	USP	(20) 10d	1325
28	HUGT2	USP	CONC. ANC.BOLT (2)3/4"-(2)2"ø WASH 3¼" " EMBED. -ALL GRDR.-(8) 10d	9790
29	HUGT3	USP	CONC. ANC.BOLT (2)3/4"-(2)2"ø WASH 3¼" EMBED. -ALL GRDR.-(8) 10d	9860
30	KST227 STRP ANC.	USP	(34) 16d	4750
31	LPTA	USP	FACE OF GABLE W/ 2x4 (11) 10d x 1½"	1250
32	LSTA36	USP	(22) 10d X 1½"	1640
33	LTW12	USP	(12) 10d	670
34	LTS20 STRAP ANC	USP	ANCHOR-1/2" WEDGE BOLT 3¼" EMBED. (10) 10d X 1½"STRAP	1890
35	LBP12 BEARING PLT	USP	½" J-BOLT	2515
36	LFTA6	USP	PLATE (8) 8d STUD (6) 8d	1035
37	MSTA12	USP	(10) 10d	1015
38	MSTA18	USP	(14) 10d	1420
39	MSTA24	USP	(18) 10d	1640
40	MSTA30	USP	(22) 10d	2065
41	MTW12	USP	(14) 10d	1030
42	MTW18	USP	(14) 10d	1030
43	MTS27B STRP ANC	USP	(24) 16d (1)3/4" ANCHOR BOLT 3¼" EMBEDDED	4635
44	MUGT15	USP	(22) 10d (1)3/4" ANCHOR BOLT 3¼" EMBEDDED	4165
45	NP37 3⅛X 7	USP	HEADER (6) 16d TOP OR BOT. SEC.(6) 10d X 1½"	
46	PA 28	USP	(15) 16d	3360
47	RT16	USP	TOP PLATES (8) 8d TRUSS (8) 8d X 1½"	1030
48	RT16A	USP	TRUSS (9) 10d x 1½" PLATE (8) 10d	1380
49	RT16-2	USP	TOP PLATES (8) 8d TRUSS (8) 8d X 1½"	1160
50	RT5 CLIPS L/R	USP	TRUSS (4) 8d PLATE (4) 8d	540
51	RT3 CLIPS L/R	USP	(4) 8d TOP (4) 8d BOTTOM	530
52	TA 12	USP	(5) 10d x 1½"	790
53	TA 14	USP	(7) 10d x 1½"	1110
54	TA 18	USP	(8) 10d x 1½"	1205
55	(2)TA 18	USP	(8) 10d x 1½" 1-PLY (8) 10d x 1½" 2-PLY	2410 2410
56	TA 24	USP	(8) 10d x 1½"	1205
57	(2)TA 24	USP	(8) 10d x 1½" 1-PLY (8) 10d x 1½" 2-PLY	2410 2410
58	USC63	USP	TRUSS (8) 10d (4)3/4" EXP. BOLTS #6170 2¾" EMBEDDED	11150
59	USC3F	USP	TRUSS (8) 10d (4)3/4" EXP. BOLTS #6170 2¾" EMBEDDED	11150
60	USC73	USP	TRUSS (8) 16d (4)3/4" EXP. BOLTS #6170 2¾" EMBEDDED	11150
61	UGTS63	USP	TRUSS (8) 16d (2)3/4" ANC. BOLTS 2¾" EMBEDDED	6170
62	(2) HTW24	USP	(20) 10d (20) 10d	2650

TRUSS HARDWARE SHEDULE

TRUSS ID	TRUSS TYPE	QUAN.	UPLIFT LT	UPLIFT MID	UPLIFT RIGHT	STRAP LEFT	STRAP MID	STRAP RIGHT
T1	COMMON	3	4		425	47		47
T1S	COMMON	2	3		402	47		47
H1	HIP	1	1		434	47		47
H1S	HIP	1	2		397	47		47
H2	HIP	1	4		406	47		47
H2S	HIP	1	2		386	47		47
H3	HIP	1	3		392	47		47
H3S	HIP	1	2		372	47		47
H54	HIP PAN	1	3		375	47		47
H4S	HIP	1	2		357	47		47
H55	HIP PAN	1	3		357	47		47
H5	HIP	1	3		356	47		47
H56	HIP PAN	1	3		336	47		47
H6	HIP	1	3		336	47		47
H57	HIP PAN	1	3		354	47		47
H7	HIP	1	3		354	47		47
HSGRD1	3-PLY HIP PAN	1	21		2052	62		62
HGRD1	2-PLY HIP GIRDER	1	21		2054	18		18
JGRD1	HIP JACK	3	2		332	24		15
JSGRD1	HIP JACK	1	2		296	24		15
J1	END JACK	24	1	47	55	50	50	N
JS1	END JACK	8	1	29	72	50	50	N
JS1A	END JACK	1	1	52	50	50	50	N
J2	CORNER JACK	6	1		96	50		N
JS2	CORNER JACK	2	1		70	50		N
J3	CORNER JACK	6	5		45	50		N
JS3	CORNER JACK	2	5		46	50		N
J4	CORNER JACK	6	1		7	50		N
JS4	CORNER JACK	2	1		7	50		N
RG1S	GABLE	1	1		115	31		31
V	VALLEY TRUSS	33						

GENERAL TRUSS NOTES:

1. INFORMATION BASED ON 125mph WINDLOAD. ALL PRESSURES WERE CALULATED USING COMPONENTS AND CLADDING
2. ROOF TRUSS LOADING:
   16 psf TOP CHORD LL
   7 psf TOP CHORD DL
   10 psf BOTTOM CHORD LL
   10 psf BOTTOM CHORD DL
   43 psf TOTAL LOAD
3. PROVIDE TRUSS BRACING PER TRUSS ENGINEERING & TPI HIB-91

REVISED 2-25-05

* DENOTES A GRAVITYOAD OF 5000 LBS OR HIGER

ALL HARDWARE MANUFACTURED BY USP XXXX

ALL HARDWARE MANUFACTURED BY SIMPSON XXXX [1]

ALL HARDWARE MANUFACTURED BY CLEVELAND XXXX [2]

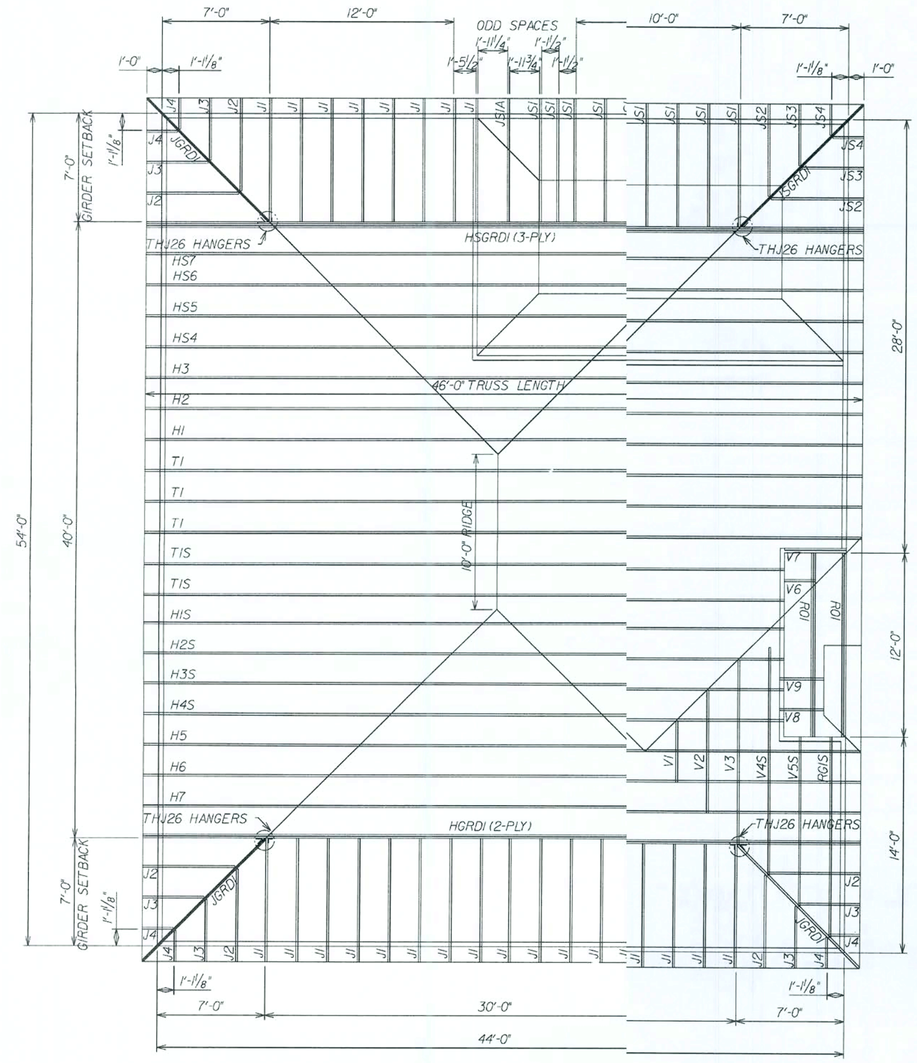

REVISIONS :

12-07-06 REV. CODE INFORMATION

Maronda Homes

(407) 321-0064 4005 MARONDA WAY SANFORD, FLORIDA

FLORIDA
THIS STRUCTURE WAS DESIGNED IN ACCORDANCE AND MEETS THE REQUIREMENTS OF SECTION R301 OF THE FLORIDA BUILDING CODE RESIDENTIAL AND ANSI/ASCE 7-2005 SUPPLEMENT FOR 125 MPH 3 SEC. GUST. HALF EXPOSURE B, ENCLOSED BUILDING. ALL TRUSSES HAVE BEEN DESIGNED TO WITHSTAND ALL APPLICABLE LOADS.

DWG\houses.05\westcott\25\unitek.1r\wct-e-125-111

HERITAGE

TRUSS INFO

WESTCOTT

ELEVATION "E"

GARAGE: RIGHT

125 MPH

DRAWN BY: K WARD

RELEASE DATE: 11-5-07

13:26:30

PLOT DATE: 31 DEC 2007

Maronda Systems
4005 Maronda Way
Sanford, FL 32771
(407)321-0064

Elmer Bergman, P.E.
License No. 50158

MAR 26 2008

SHEET:

TR1e

FLORIDA BUILDING CODE 2004 : RESIDENTIAL

elecitem REPORT

Thu Feb 17 08:08:13 2005
p:*fl*houses 05*westcott*electric*el1.ele

QUANTITY	DESCRIPTION
21	1451 Single Pole Switch
1	200 Amp Panel
3	220 V. Special Receptacle
1	ANC U200 - Underground Meter Socket
2	CLN B344A - 3 Gang Box
9	CLN B620H - Octagon Hanger
2	Cable TV
2	Ceiling Fan (By Others)
1	Deluxe Broadway 2' P3298-10
1	Deluxe Broadway 4' P3300-15
1	Door Bell Buzzer
1	Door Bell Chime
1	Door Bell Transformer
32	Duplex Receptacle
2	Exhaust Fan
1	Exterior WP Lamp
1	Fluor Ltg 4'L (4B)
2	Front Door WP Lamp
4	G.F.I. Receptacle
6	H-7T Overhead Light
5	H-7T-Rec Lht
2	Power Disconnect Switch
53	RAC 7302 - 1 Gang BoX
10	RAC 7835 - 2 Gang Box
1	Rear Door WP Lamp
3	Single Receptacle
3	Smoke Detector
3	Switched Receptacle
3	Telephone Outlet
9	Three Way Switch

elecinth REPORT

Thu Feb 17 08:08:13 2005
p:*fl*houses 05*westcott*electric*el1.ele

QUANTITY	DESCRIPTION
95'	10 Gauge 3 Cond. Copper
734'	12 Gauge 2 Cond. Copper
1514'	14 Gauge 2 Cond. Copper
281'	14 Gauge 3 Cond. Copper
186'	6 Gauge, Cond. Copper

GENERAL ELECTRICAL NOTES:

CIRCUITRY IS DIAGRAMATIC ONLY, FIELD CONDITIONS MAY CHANGE ACTUAL INSTALLATION.

PROVIDE AFCIs (arc-fault circuit interrupters) IN ALL DWELLING UNIT BEDROOMS PER NEC. SECTION 210J2

SMOKE DETECTORS ARE INSTALLED PER MFG. INSTRUCTIONS AND NFPA 72, ALL DEVICES SHALL BE INTERCONNECTED WITH BATTERY BACK-UP.

FOR INSTALLATION OF GROUND ROD, SEE TYP. CONC. ENCASED ELECTRODE DETAIL SHEET* FTG

REVISED 10-05-06

LIST OF OPTIONS:

CFA	OPTIONAL COACH LIGHTS, (2) FLOOD LIGHTS AT REAR AND GARAGE OUTLET REVISED 11-18-05
GSD	OPTIONAL DOOR LIGHT REVISED 11-18-05

ELECTRICAL SYMBOL LEGEND:

REGULAR TEXT	REVERSE TEXT	DESCRIPTION
PD	DS	Power Disconnect Switch
		Door Bell Chime
PB	BS	Door Bell Buzzer
		Ceiling Fan (By Others)
SD	D2	Smoke Detector
		Light Fixture Bath
WP	WP	Exterior WP Lamp
		Single Pole Switch
		Three Way Switch
		Single Receptacle
		Duplex Receptacle
GFI	GFI	GFI Receptacle
SW.	SW2	Switched Receptacle
		220 V. Special Receptacle
		Ceiling Ltg Fixture
R	R	Recessed Ltg. Fixture
F	F	Exhaust Fan
CATV	CATV	Cable TV
TP	TP	Telephone Outlet
		Flood Lights
E	E	Exhaust Fan / Light Combo

REVISED 03-19-07

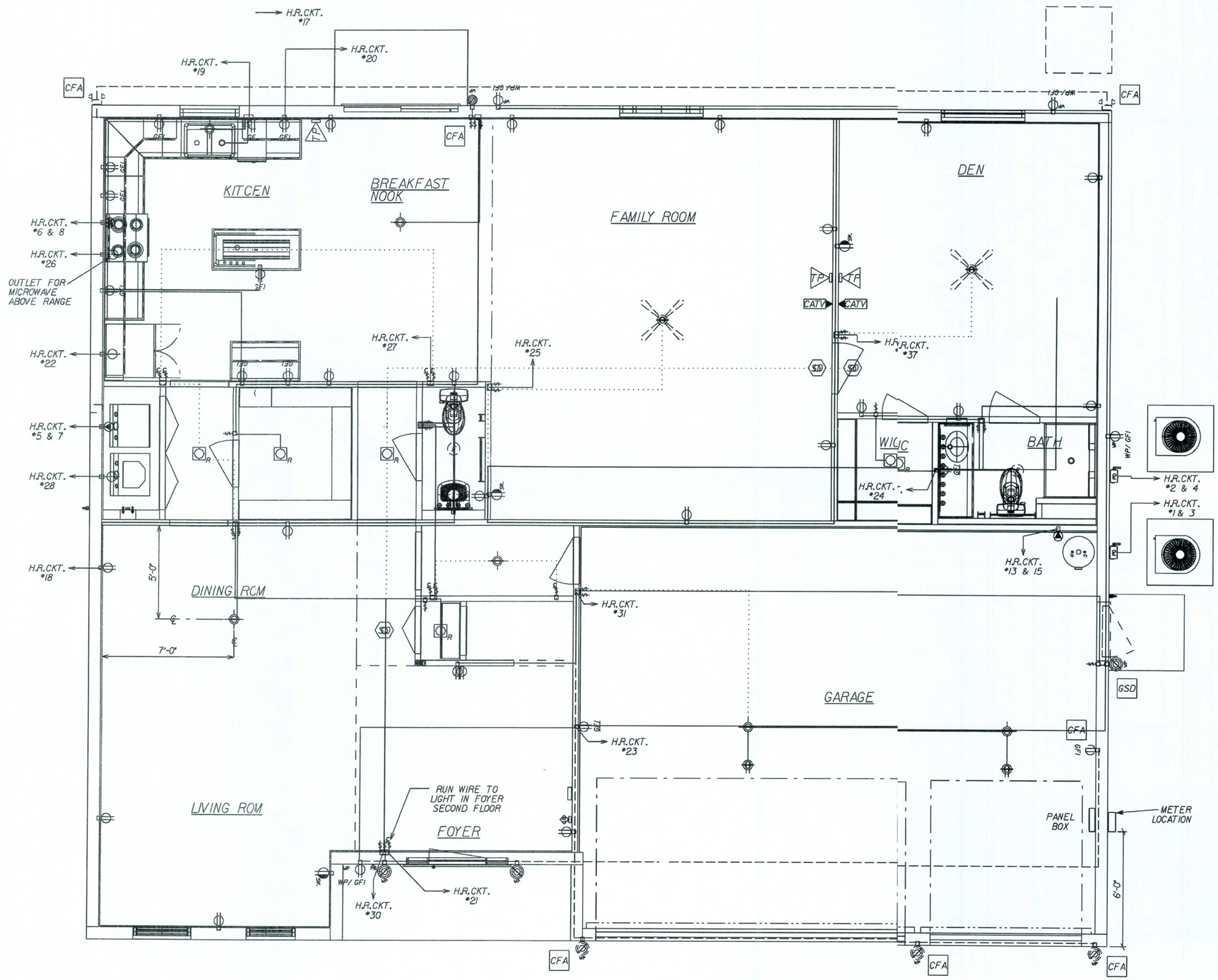

REVISIONS :
02-19-07 ADD SMOKE DETECTOR TO MASTER BEDROOM

Maronda Homes
(407) 321-0064 4005 MARONDA WAY SANFORD, FLORIDA

FLORIDA: THIS STRUCTURE WAS DESIGNED IN ACCORDANCE AND MEETS THE REQUIREMENTS OF THE FLORIDA BUILDING CODE 2004 : RESIDENTIAL AND 2006 SUPPLEMENT

AMERICANA | 1st FLR ELECTRIC

WESTCOTT

ELEVATION "ALL"

GARAGE: RIGHT

DRAWN BY:

RELEASE DATE: 01-24-05

SHEET: E1

p:\fl\houses_05\westcott\electric\wcf5.ell

PLOT DATE: 12 DEC 2007 13:50:48

FLORIDA BUILDING CODE 2004 : RESIDENTIAL

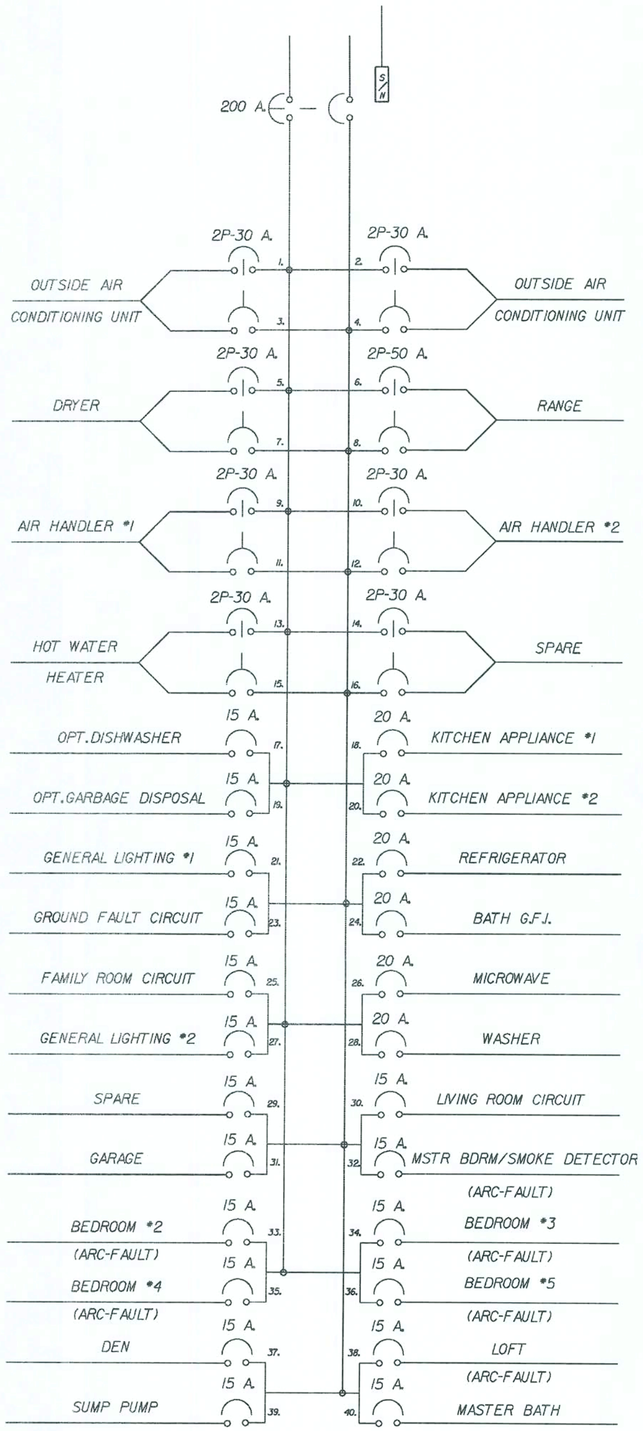

MAIN BREAKER LOAD CENTER

ELECTRICAL LOAD CALCULATIONS

11/28/06

MODEL: WESTCOTT 5

		VOLT/AMPS
LARGEST LOAD: HEAT PUMPW/SUPPLEMENTAL HEAT		**22028**
SQUARE FEET LIVING AREA	**3901** @ 3 VOLT/AMPS	11703
SMALL APPLIANCE CIRCUITS		3000
LAUNDRY CIRCUIT		1500
OVEN		11700
WATER HEATER		4500
DISHWASHER		1500
DRYER		5000
DISPOSAL		500
TOTAL LOAD		**39403**

FIRST 10KVA @100%	10000
REMAINDER @40%	11761.2
LARGEST LOAD	22028

TOTAL LOAD **43789** V.A./240 VOLTS= **182** AMPS

SERVICE SIZE: 200 AMPS

NOTE: HEAT PUMPS ARE CALCULATED AT 100% WITH SUPPLIMENTAL HEAT AT 100%

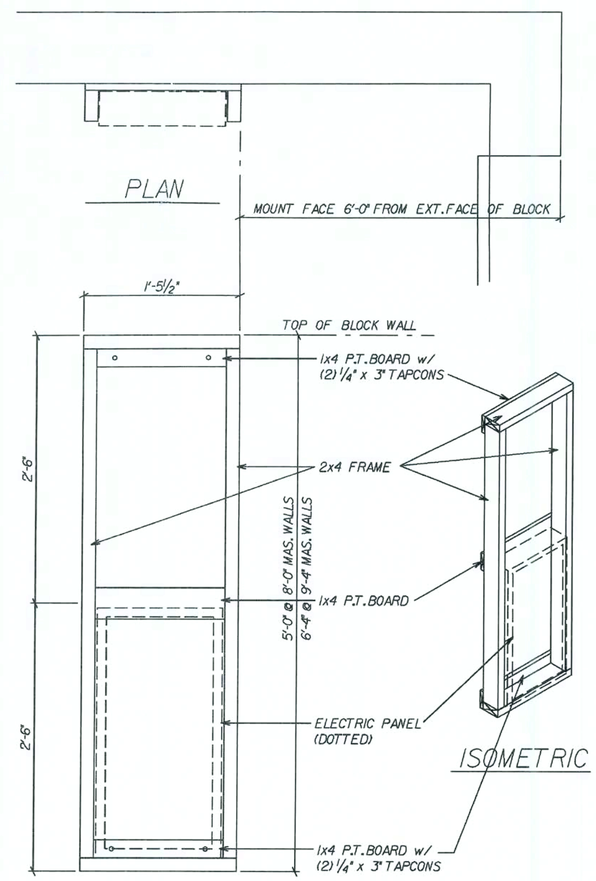

ELECTRIC PANEL FRAME

REVISED 09-07-07
ADDED HGT. @ 9'-4" MAS. WALL

SCALE: 1" = 1'-0"

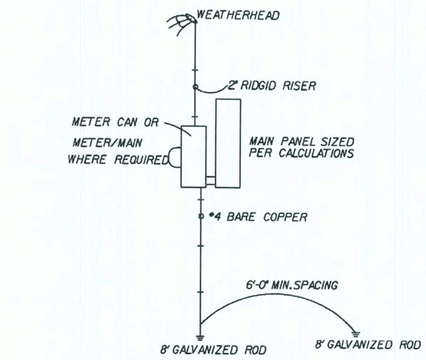

OVERHEAD SERV.

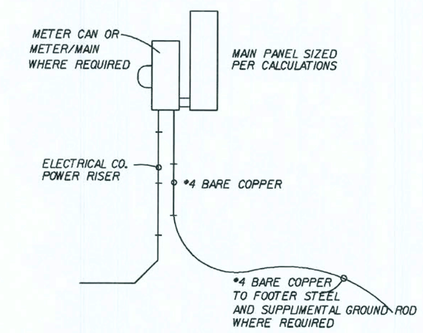

UNDER GROUND SERV.

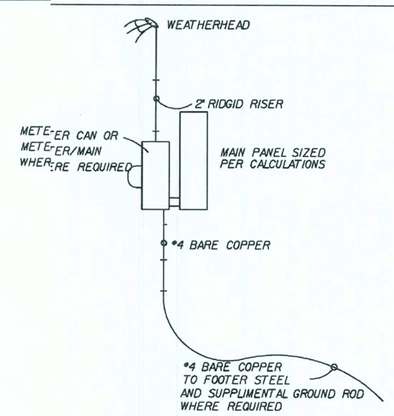

OVERHEAD SERV.

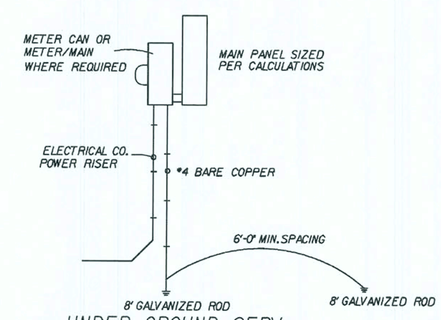

UNDER GROUND SERV.

* GROUNDING ELECTRODE SYSTEM TO BE INSTALLED PER ARTICLE 250 NAT. ELECT. CODE *

REVISED 06-14-06 SPACING REQUIREMENT

REVISIONS :
11-28-06 REV. ELECT. LOAD CALC.
02-19-07 ADD SMOKE DETECTOR TO MASTER BEDROOM

Maronda Homes
(407) 321-0064 4005 MARONDA WAY SANFORD, FLORIDA

FLORIDA:
THIS STRUCTURE WAS DESIGNED IN ACCORDANCE AND MEETS THE REQUIREMENTS OF THE FLORIDA BUILDING CODE 2004 : RESIDENTIAL AND 2005, 2006 SUPPLEMENT

AMERICANA | MISC. ELECTRICAL

WESTCOTT

ELEVATION "ALL"

GARAGE:
DRAWN BY:
RELEASE DATE: 09-10-04

SHEET: ELIA

PLOT DATE: 12 DEC 2007 13:50:48

p:\houses_05\westcott\electric\wct5ala

FLORIDA BUILDING CODE 2004 : RESIDENTIAL

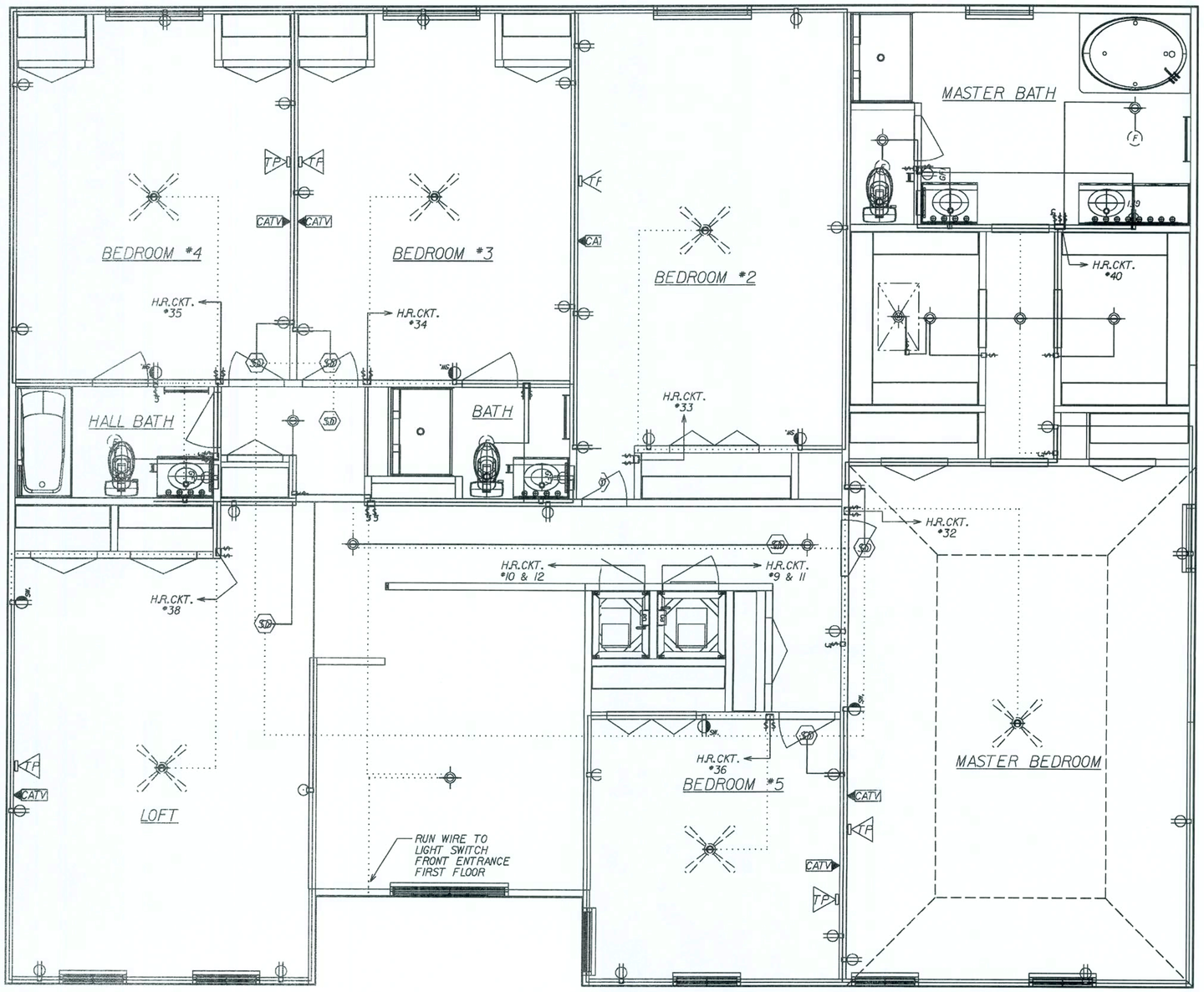

elecitem REPORT

Wed Dec 15 15:07:06 2004
p:*fl*houses 05*westcott*electric*el2.ele

QUANTITY	DESCRIPTION
23	1451 Single Pole Switch
1	CLN B344A - 3 Gang Box
9	CLN B620H - Octagon Hanger
6	Ceiling Fan (By Others)
3	Deluxe Broadway 2' P3298-10
1	Deluxe Broadway 4' P3300-15
34	Duplex Receptacle
4	Exhaust Fan
1	Floor Rec
9	H-7T Overhead Light
1	H-7T-Rec Lht
2	Power Disconnect Switch
52	RAC 7302 - 1 Gang BoX
10	RAC 7835 - 2 Gang Box
8	Smoke Detector
6	Switched Receptacle
6	Telephone Outlet
7	Three Way Switch

elecinth REPORT

Wed Dec 15 15:07:06 2004
p:*fl*houses 05*westcott*electric*el2.ele

QUANTITY	DESCRIPTION
112'	10 Gauge/3 Cond. Copper
69'	12 Gauge/2 Cond. Copper
1276'	14 Gauge/2 Cond. Copper
484'	14 Gauge/3 Cond. Copper

GENERAL ELECTRICAL NOTES:

CIRCUITRY IS DIAGRAMATIC ONLY, FIELD CONDITIONS MAY CHANGE ACTUAL INSTALLATION.

PROVIDE AFCIs (arc-fault circuit interrupters) IN ALL DWELLING UNIT BEDROOMS PER NEC, SECTION 210J2

SMOKE DETECTORS ARE INSTALLED PER MFG. INSTRUCTIONS AND NFPA 72. ALL DEVICES SHALL BE INTERCONNECTED WITH BATTERY BACK-UP.

FOR INSTALLATION OF GROUND ROD, SEE TYP. CONC. ENCASED ELECTRODE DETAIL SHEET* FTG

LIST OF OPTIONS:

CFA	OPTIONAL COACH LIGHTS, (2) FLOOD LIGHTS AT REAR AND GARAGE OUTLET REVISED 11-18-05
GSD	OPTIONAL DOOR LIGHT REVISED 11-18-05

ELECTRICAL SYMBOL LEGEND:

REVISED 03-19-07

REGULAR TEXT	REVERSE TEXT	DESCRIPTION
PD	PD	Power Disconnect Switch
		Door Bell Chime
PB	PB	Door Bell Buzzer
		Ceiling Fan (By Others)
SD	SD	Smoke Detector
		Light Fixture Bath
WP	WP	Exterior WP Lamp
		Single Pole Switch
		Three Way Switch
		Single Receptacle
		Duplex Receptacle
GFI	GFI	GFI Receptacle
SW.	SW2	Switched Receptacle
		220 V. Special Receptacle
		Ceiling Ltg Fixture
R	R	Recessed Ltg. Fixture
F	F	Exhaust Fan
CATV	CATV	Cable TV
TP	TP	Telephone Outlet
		Flood Lights
L		Exhaust Fan / Light Combo

REVISIONS :

REVISED 10-05-06

Maronda Homes
(407) 321-0064 4005 MARONDA WAY SANFORD, FLORIDA

FLORIDA: THIS STRUCTURE WAS DESIGNED IN ACCORDANCE AND MEETS THE REQUIREMENTS OF THE FLORIDA BUILDING CODE 2004 : RESIDENTIAL AND 2005, 2006 SUPPLEMENT

AMERICANA 2nd FLR ELECTRIC

WESTCOTT

ELEVATION "ALL"

DRAWN BY: GARAGE: RIGHT

RELEASE DATE: 01-24-05

SHEET: EL2

PLOT DATE: 12 DEC 2007 13:50:49

p:\fl\houses_05\westcott\electric\wct5el2

FLORIDA BUILDING CODE 2004 : RESIDENTIAL

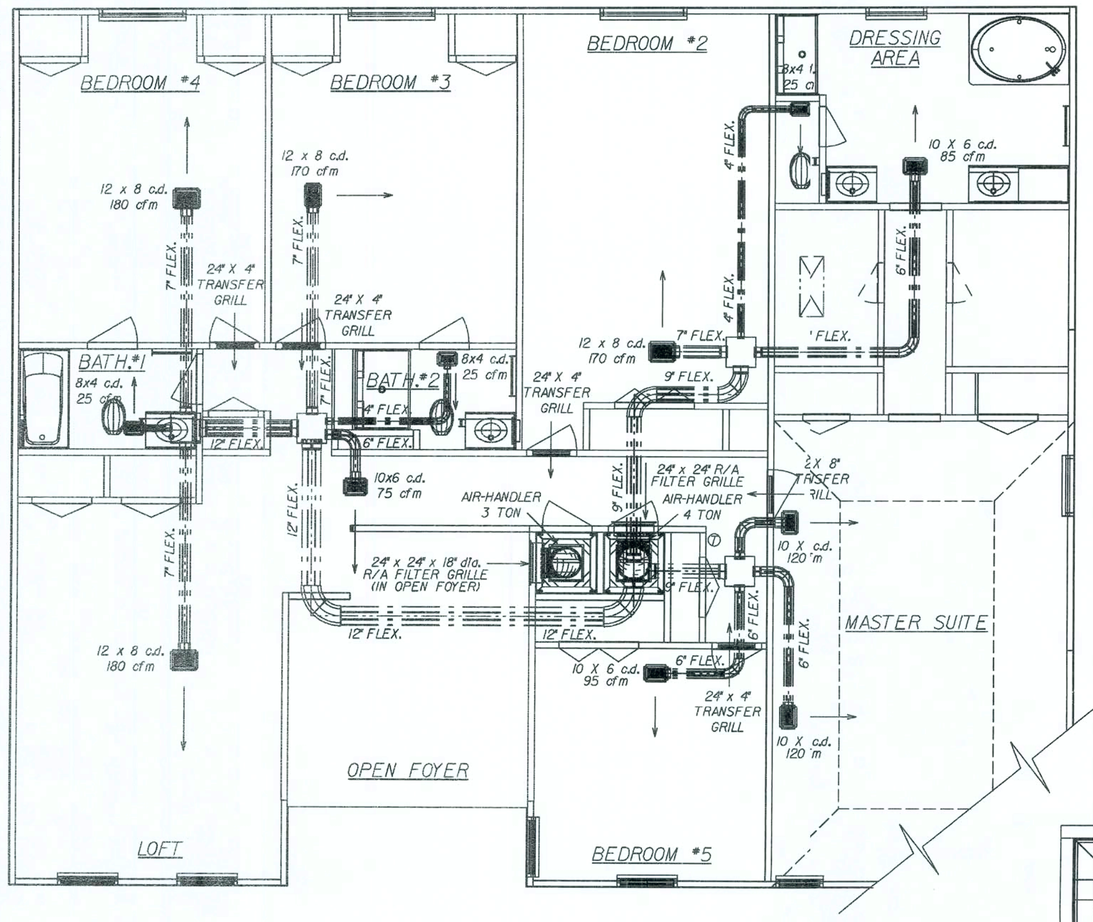

2nd. FLOOR HEATING LAYOUT

MECHANICAL EQUIPMENT :

4 TON
TEMPSTAR FEM2X4800 13 SEER
TEMPSTAR N2H348AKA 13 SEER
7.5 KW
BRAEBURN 5200 2 STAGE HEAT PUMP PROGRAMABLE
BROAN 671-70 CFM
SIZE OF REDUCTION BOXES (DB6-16x14x16x12x15)
SIZE OF TRIANGLES (15x15x15x15)
EXT STATIC .60 - 1460 CFM L

ALL TAPES, CONNECTORS AND MASTIC
USED WILL BE UL-181 APPROVED

* USE WITH 13 SEER EQUIP. *

MECHANICAL EQUIPMENT :

3 TON
TEMPSTAR FEM2X3600 13 SEER
TEMPSTAR N2H336AKA 13 SEER
5 KW
BRAEBURN 5200 PROGRAMABLE
BROAN 671-70 CFM (2)
SIZE OF REDUCTION BOXES (DB6-16x14x16x12x16)
SIZE OF TRIANGLES (15x15x15x15)

ALL TAPES, CONNECTORS & MASTIC
USED WILL UL-181 APPROVED

EXT STATIC .60 - 935 CFM L

1st. FLOOR HEATING LAYOUT

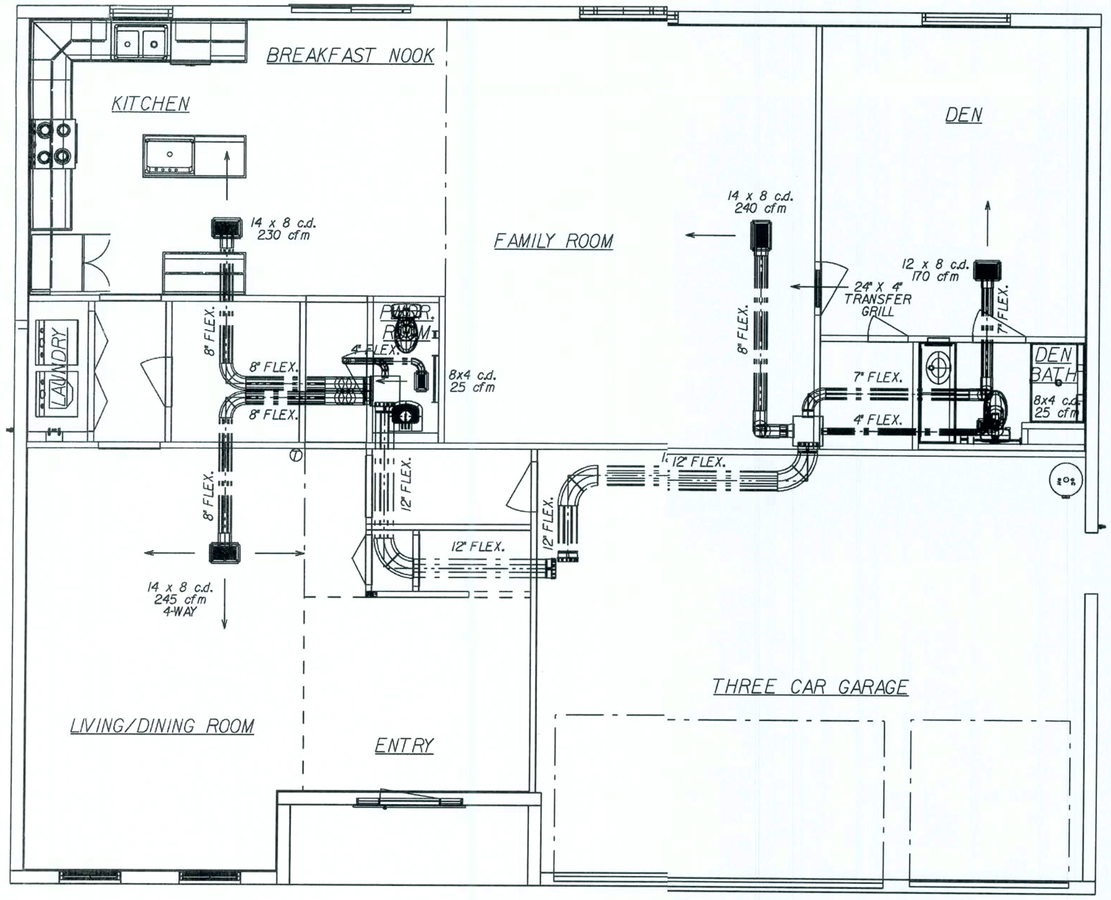

GENERAL MECHANICAL NOTES:

ALL TAPES, CONNECTORS AND MASTIC USED WILL BE UL-181 APPROVED.

SEE ELECTRIC PLANS FOR EXHAUST FAN LOCATIONS IN BATH AREAS.

SEE FLOOR PLAN FOR CLOTHES DRYER VENT LOCATION.

M1602.4 BALANCED RETURN AIR: TRANSFER GRILLES @ HABITABLE ROOMS SEE DETAIL BELOW:

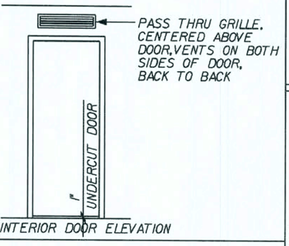

REVISIONS :
01/03/07 COMPLETE 13 SEER UPDATE TJM

Maronda Homes
(407) 321-0064 4005 MARONDA WAY SANFORD, FLORIDA

FLORIDA:
THIS STRUCTURE WAS DESIGNED IN ACCORDANCE AND MEETS THE REQUIREMENTS OF THE FLORIDA BUILDING CODE RESIDENTIAL 2004 WITH 2005 SUPPLEMENT

AMERICANA | REGISTER LAYOUT

WESTCOTT

ELEVATION "ALL"

GARAGE: RIGHT

DRAWN BY:
RELEASE DATE: 09-10-04

SHEET:
HVA

PLOT DATE: 12 DEC 2007 13:55:59

p:\1houses_05\westcott\mechanical\1lowcth3.jwg

FLORIDA BUILDING CODE 2004 : RESIDENTIAL

* USE WITH 13 SEER EQUIP. *

hvacitem REPORT

Thu Jan 04 10:18:47 2007
p:*fl*houses 05*westcott*mechanical*flawcth.htg

QUANTITY			DESCRIPTION
5	23A	150045.0035	8x4 CEILING BOOT W/4" DIA. COLLAR
5	23C	150045.0036	10x6 CEILING BOOT W/6" DIA. COLLAR
4	23E	150045.0038	12x8 CEILING BOOT W/7" DIA. COLLAR
3	23H	150045.0039	14x8 CEILING BOOT W/8" DIA. COLLAR
1	23N	150045.0036	10x6 CEILING BOOT
1	23Z	150045.0046	24x24 R/A TRANSITION BOOT W/18" COLLAR
1	23Z1	150045.0046	24x24 R/A TRANSITION BOOT
5'	3F10	150040.0097	10" FOIL FLEX R6
50'	3F12	150040.0098	12" FOIL FLEX R6
3'	3F18	150040.0138	18" FOIL FLEX R6
3'	3F20	150040.0140	20" FOIL FLEX R6
67'	3F4	150040.0091	4" FOIL FLEX R6
44'	3F6	150040.0093	6" FOIL FLEX R6
61'	3F7	150040.0094	7" FOIL FLEX R6
62'	3F8	150040.0095	8" FOIL FLEX R6
16'	3F9	150040.0096	9" FOIL FLEX R6
1	6J1	150005.0043	FEM2X3600A 13 SEER 3.0 TON AIR HANDLER UNIT
1	6L1	150005.0045	FEM2X4800A 13 SEER 4.0 TON AIR HANDLER UNIT
1	6P1	150010.0103	N2H336AKA 13 SEER 3.0 TON CONDENSER
1	6R1	150010.0105	N2H348AKA 13 SEER 4.0 TON CONDENSER
2	7C	150005.0110	19x13x30"H BOX PLENUM
6	7R	150040.0111	18" SQUARE DUCT PLENUM
5	81A	150055.0041	24x4 TRANSFER GRILLE
5	81B	150045.0052	24x4 TRANSFER GRILLE FRAME
1	81C	150055.0078	24x8 TRANSFER GRILLE
1	81D	150045.0078	24x8 TRANSFER GRILLE FRAME
2	84A	150055.0032	24x24 RETURN AIR FILTER GRILLE
5	9B1	150040.0075	4" K-COLLAR/ROTH (4KC/413)
5	9D1	150040.0077	6" K-COLLAR/ROTH (6KC/413)
1	9E	150035.0003	7" COLLAR
5	9E1	150040.0078	7" K-COLLAR/ROTH (7KC/413)
3	9F1	150040.0079	8" K-COLLAR/ROTH (8KC/413)
2	9H1	150040.0081	10" K-COLLAR/ROTH (10KC/413)
6	9I1	150040.0082	12" K-COLLAR/ROTH (12KC/413)
4	9L1	150040.0080	9" K-COLLAR/ROTH (9KC/413)
1	9M1	150040.0137	18" K-COLLAR/ROTH (18KC/413)
2	9O1	150040.0139	20" K-COLLAR/ROTH (413)

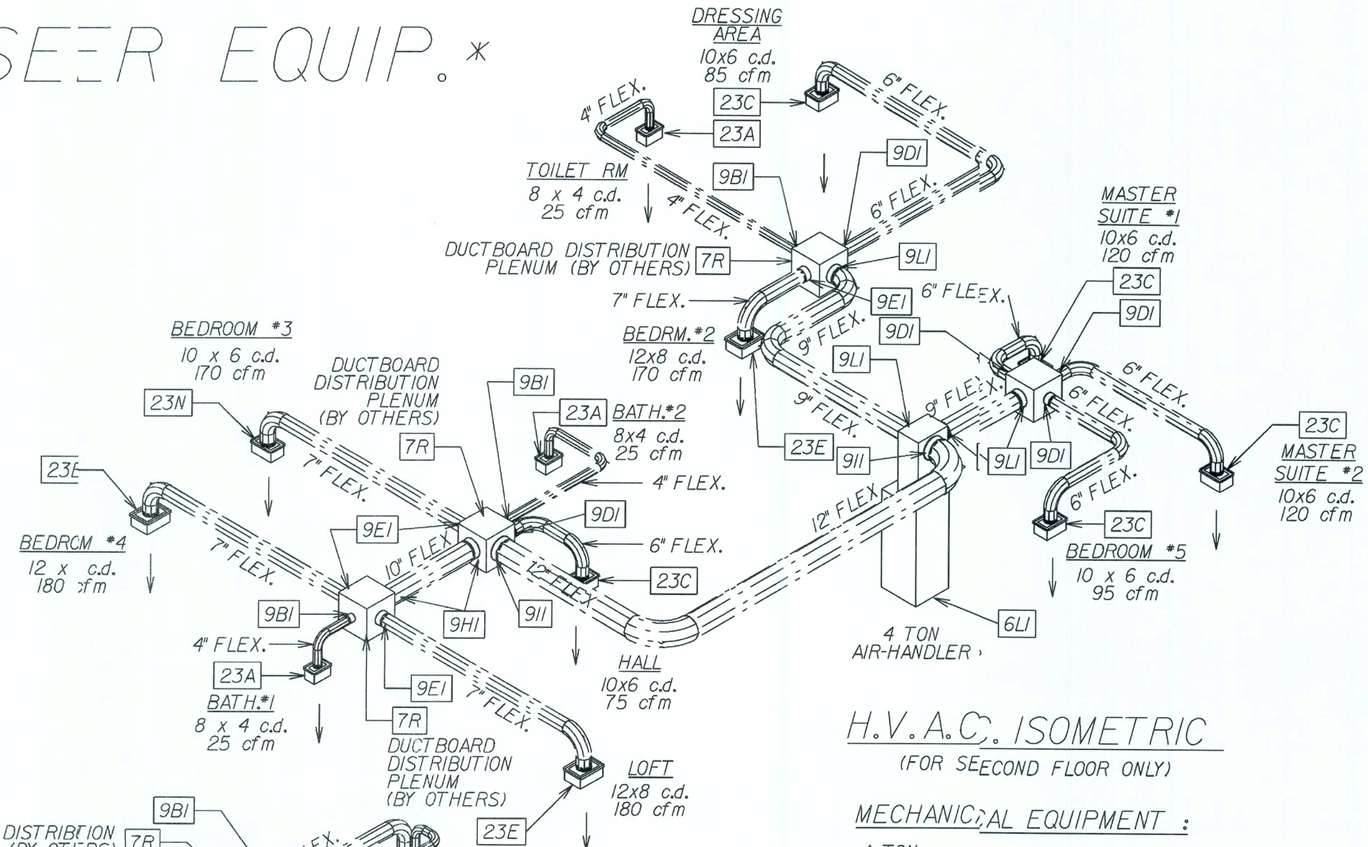

H.V.A.C. ISOMETRIC
(FOR SECOND FLOOR ONLY)

MECHANICAL EQUIPMENT :

4 TON
TEMPSTAR FEM2X4800 13 SEER
TEMPSTAR N2H348AKA 13 SEER
7.5 KW
BRAEBURN 22 STAGE HEAT PUMP PROGRAMABLE
BROAN 671 (770 CFM)
SIZE OF REDUCTION BOXES (DB6-16x14x16x12x15)
SIZE OF TRIANGLES (15x15x15x15)
EXT STATIC .60 1460 CFM L

ALL TAPES, CONNECTORS AND MASTIC USED WILL BE UL-181 APPROVED

MECHANICAL EQUIPMENT :

3 TON
TEMPSTAR FEM2X3600 13 SEER
TEMPSTAR N2H336AKA 13 SEER
5 KW
BRAEBURN 5200 PROGRAMABLE
BROAN 671-70 CFM (2)
SIZE OF REDUCTION BOXES
(DB6-16x14x16x12x16)
SIZE OF TRIANGLES (15x15x15x15)

ALL TAPES, CONNECTORS & MASTIC USED WILL UL-181 APPROVED

EXT STATIC .60 - 935 CFM L

H.V.A.C. ISOMETRIC
(FOR FIRST FLOOR ONLY)

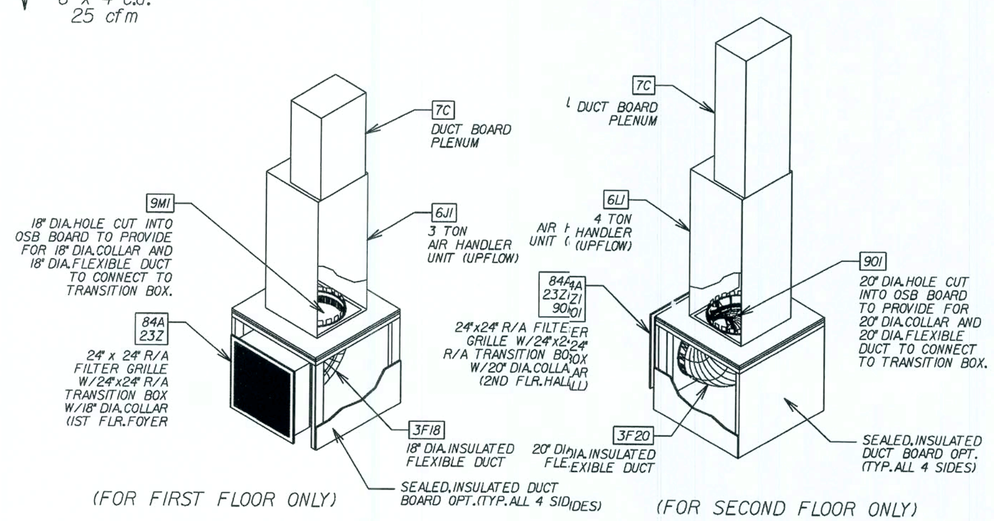

(FOR FIRST FLOOR ONLY) (FOR SECOND FLOOR ONLY)

RETURN-AIR ISOMETRIC
(BOTH UNITS LOCATED ON 2ND FLOOR)

REVISIONS :
01/03/07 COMPLETE 13 SEER UPDATE TJM

Maronda Homes
COPYRIGHT © 2005 MARONDA HOMES
(407) 321-0064 4005 MARONDA WAY SANFORD, FLORIDA

FLORIDA:
THIS STRUCTURE WAS DESIGNED IN ACCORDANCE AND MEETS THE REQUIREMENTS OF THE FLORIDA BUILDING CODE RESIDENTIAL 2004 AND 2005, 2006 SUPPLEMENT

p:\fl\houses_05\westcott\mechanical\flawcth.htg

AMERICANA HVAC ISOMETRIC
WESTCOTT
ELEVATION "ALL"
GARAGE: RIGHT
DRAWN BY: TOM MARTINEZ
RELEASE DATE: / /
13:56:00
PLOT DATE: 12 DEC 2007

SHEET:
ISO-H

FLORIDA BUILDING CODE 2004 : RESIDENTIAL

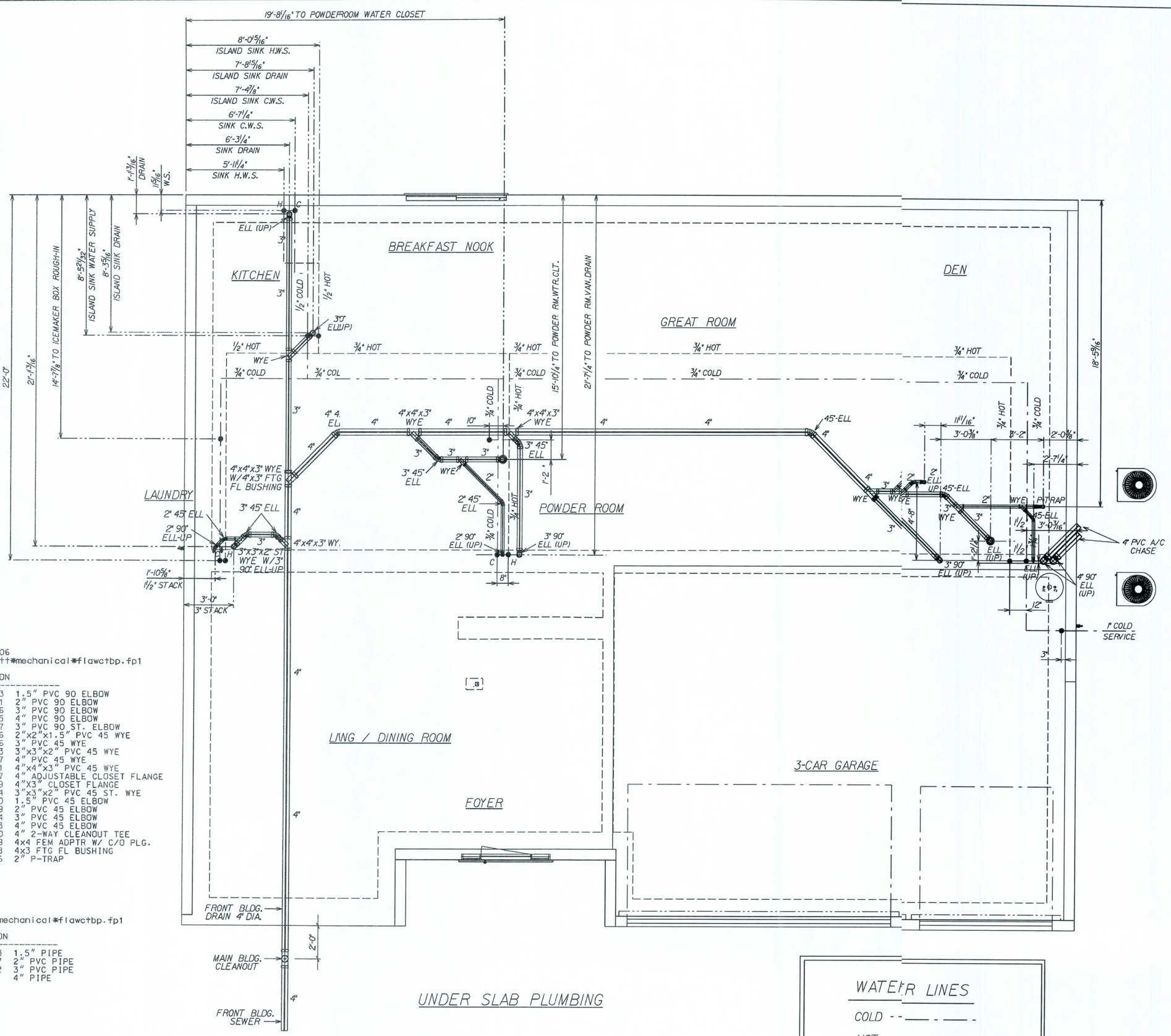

plumitem REPORT

Mon Oct 02 15:31:53 2006
p:*fl*houses 05*westcott*mechanical*flawctbp.fp1

QUANTITY		DESCRIPTION	
1	14B	130005.0013	1.5" PVC 90 ELBOW
3	14C	130005.0041	2" PVC 90 ELBOW
6	14D	130005.0066	3" PVC 90 ELBOW
2	14E	130005.0085	4" PVC 90 ELBOW
1	15D	130005.0067	3" PVC 90 ST. ELBOW
1	18D	130005.0036	2"x2"x1.5" PVC 45 WYE
1	18E	130005.0076	3" PVC 45 WYE
3	18G	130005.0063	3"x3"x2" PVC 45 WYE
1	18H	130005.0097	4" PVC 45 WYE
4	18L	130005.0081	4"x4"x3" PVC 45 WYE
1	1A	130035.0147	4" ADJUSTABLE CLOSET FLANGE
1	1B	130005.0099	4"X3" CLOSET FLANGE
1	20C	130005.0264	3"x3"x2" PVC 45 ST. WYE
1	21B	130005.0010	1.5" PVC 45 ELBOW
3	21C	130005.0039	2" PVC 45 ELBOW
5	21D	130005.0064	3" PVC 45 ELBOW
2	21E	130005.0083	4" PVC 45 ELBOW
1	24B	130005.0150	4" 2-WAY CLEANOUT TEE
1	29H	130005.0289	4x4 FEM ADPTR W/ C/O PLG.
2	4F	130005.0098	4x3 FTG FL BUSHING
1	6B	130005.0046	2" P-TRAP

Pluminth REPORT

Mon Oct 02 15:31:53 2006
p:*fl*houses 05*westcott*mechanical*flawctbp.fp1

QUANTITY	DESCRIPTION	
5'	130005.0023	1.5" PIPE
17'	130005.0047	2" PVC PIPE
48'	130005.0072	3" PVC PIPE
76'	130005.0091	4" PIPE

PER FLORIDA PLUMBING CODE: ALL WATER INTO HOUSE WILL RUN ON 1" CPVC TO FIRST FIXTURE GROUP.
REVISED 10-03-06

PER FLORIDA PLUMBING CODE: ALL DWV THROUGH FOOTERS WILL BE SLEEVED
REVISED 08-15-05

REVISIONS :
08/16/06 REV.CLEANOUT & BOM LIST TJM

Maronda Homes
(407) 321-0064 4005 MARONDA WAY SANFORD, FLORIDA

FLORIDA:
THIS STRUCTURE WAS DESIGNED IN ACCORDANCE AND MEETS THE REQUIREMENTS OF THE FLORIDA BUILDING CODE 2004 : RESIDENTIAL AND 2005 SUPLEMENT

AMERICANA
UNGRD. PLBG.
WESTCOTT
ELEVATION "ALL"
GARAGE: RIGHT
DRAWN BY:
RELEASE DATE: / /

SHEET:
FP1

PLOT DATE: 12 DEC 2007 13:57:42
p:\fl\houses_05\westcott\mechanical\flawctbp.fp1

FLORIDA BUILDING CODE 2004 : RESIDENTIAL

COMPLETE SANITARY PLUMBING DIAGRAM:

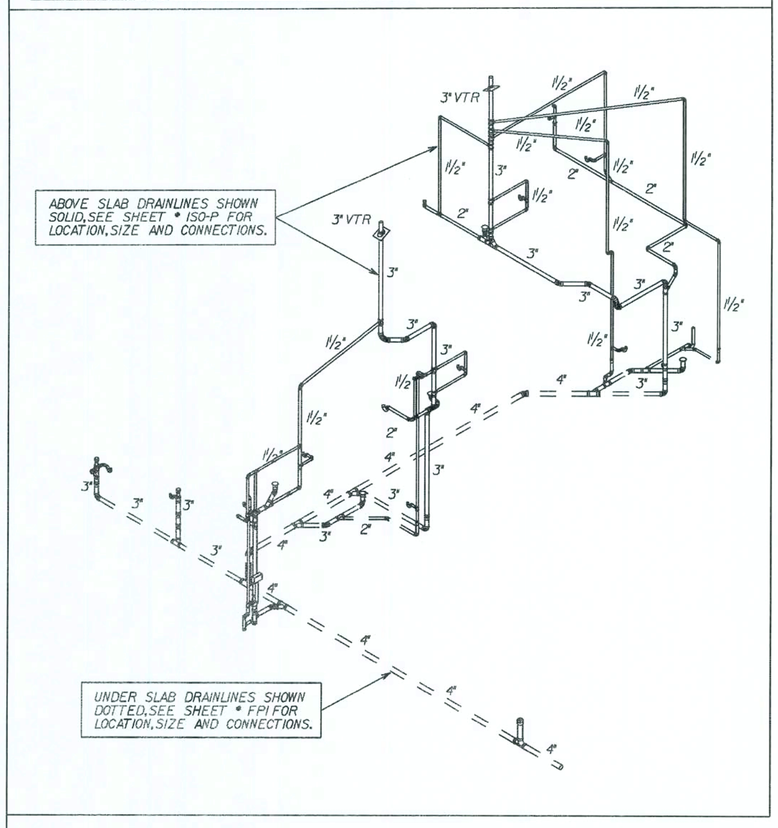

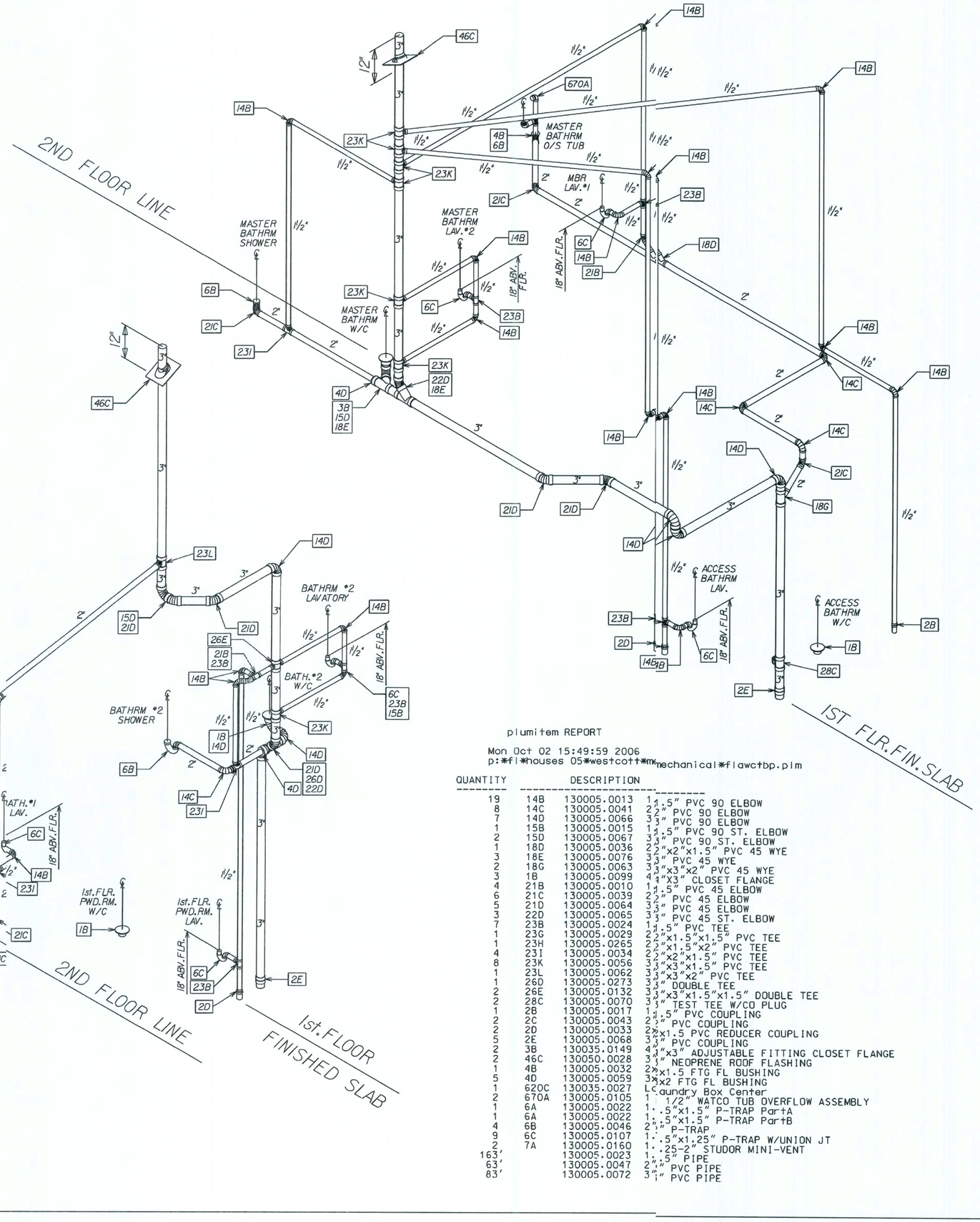

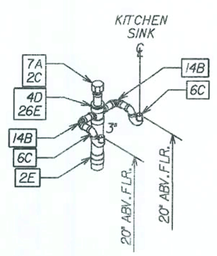

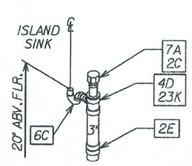

NOTE :

1) ALL PIPE SIZES ARE BASED ON NIBCO FITTINGS.

2) DO NOT GLUE *P-TRAPS ABOVE FLOOR LINE UNTIL DRYWALL IS INSTALLED.

PER FLORIDA PLUMBING CODE: ALL DWV THROUGH FOOTERS WILL BE SLEEVED

REVISED 08-15-05

plumitem REPORT

Mon Oct 02 15:49:59 2006
p:*fl*houses 05*westcott*mechanical*flawctbp.plm

QUANTITY		DESCRIPTION	
19	14B	130005.0013	1½.5" PVC 90 ELBOW
8	14C	130005.0041	2½" PVC 90 ELBOW
7	14D	130005.0066	3½" PVC 90 ELBOW
1	15B	130005.0015	1½.5" PVC 90 ST. ELBOW
2	15D	130005.0067	3½" PVC 90 ST. ELBOW
1	18D	130005.0036	2½"x2"x1.5" PVC 45 WYE
3	18E	130005.0076	3½" PVC 45 WYE
2	18G	130005.0063	3½"x3"x2" PVC 45 WYE
3	1B	130005.0099	4½"X3" CLOSET FLANGE
4	21B	130005.0010	1½.5" PVC 45 ELBOW
6	21C	130005.0039	2½" PVC 45 ELBOW
5	21D	130005.0064	3½" PVC 45 ELBOW
3	22D	130005.0065	3½" PVC 45 ST. ELBOW
7	23B	130005.0024	1½.5" PVC TEE
1	23G	130005.0029	2½"x1.5"x1.5" PVC TEE
1	23H	130005.0265	2½"x1.5"x2" PVC TEE
4	23I	130005.0034	2½"x2"x1.5" PVC TEE
8	23K	130005.0056	3½"x3"x1.5" PVC TEE
1	23L	130005.0062	3½"x3"x2" PVC TEE
1	26D	130005.0273	3½" DOUBLE TEE
2	26E	130005.0132	3½"x3"x1.5"x1.5" DOUBLE TEE
2	28C	130005.0070	3½" TEST TEE W/CO PLUG
1	2B	130005.0017	1½.5" PVC COUPLING
2	2C	130005.0043	2½" PVC COUPLING
2	2D	130005.0033	2½x1.5 PVC REDUCER COUPLING
5	2E	130005.0068	3½" PVC COUPLING
2	3B	130035.0149	4½"x3" ADJUSTABLE FITTING CLOSET FLANGE
2	46C	130050.0028	3½" NEOPRENE ROOF FLASHING
1	4B	130005.0032	2½x1.5 FTG FL BUSHING
5	4D	130005.0059	3½x2 FTG FL BUSHING
1	620C	130035.0027	Laundry Box Center
2	670A	130005.0105	1 1/2" WATCO TUB OVERFLOW ASSEMBLY
1	6A	130005.0022	1..5"x1.5" P-TRAP PartA
1	6A	130005.0022	1..5"x1.5" P-TRAP PartB
4	6B	130005.0046	2½" P-TRAP
9	6C	130005.0107	1..5"x1.25" P-TRAP W/UNION JT
2	7A	130005.0160	1..25-2" STUDOR MINI-VENT
163'		130005.0023	1..5" PIPE
63'		130005.0047	2½" PVC PIPE
83'		130005.0072	3½" PVC PIPE

REVISIONS :

10/04/06 REVD. KITCHEN SINK ASSEM.-TJM

Maronda Homes
(407) 321-0064 4005 MARONDA WAY SANFORD, FLORIDA

FLORIDA: THIS STRUCTURE WAS DESIGNED IN ACCORDANCE AND MEETS THE REQUIREMENTS OF THE FLORIDA BUILDING CODE 2004 : RESIDENTIAL AND 2006 SUPPLEMENT

AMERICANA | D.W.V. PLBG. ISO

WESTCOTT

ELEVATION "ALL"

GARAGE:

DRAWN BY:

RELEASE DATE: 09-10-04

p:\houses_05\westcott\mechanical\flawctbp.iso

13:57:43

PLOT DATE: 12 DEC 2007

SHEET: ISO-P

FLORIDA BUILDING CODE 2004 : RESIDENTIAL

plumitem REPORT

Thu Oct 05 10:45:39 2006
p:*fl*houses 05*westcott*mechanical*flawctbp.plm

QUANTITY			DESCRIPTION
1	140A	130025.0017	1/2" COPPER 90 ELBOW
4	140M	130025.0051	1/2" COPPER 90 ELBOW Drop
1	151A	130025.0020	1/2" COPPER MALE ADAPTER
1	200A	130035.0061	Tub Diverter
3	200B	130035.0061	Shower Diverter
2	300B	130010.0049	Straight Valve 1/2" x 3/8"
21	300C	130010.0046	1/2" x 3/8"Angle Valve
7	54A	130010.0022	1/2" CPVC COUPLING
4	54B	130010.0009	3/4" CPVC COUPLING
1	54C	130010.0062	1" CPVC COUPLING
43	56A	150060.0199	1/2" CPVC 90 ELBOW
29	56B	130010.0007	3/4" CPVC 90 ELBOW
8	58A	130010.0027	1/2" CPVC 90 ST. ELBOW
1	620C	130035.0027	Laundry Box Center
1	630A	130035.0057	Ice Maker Box
4	64B	130010.0013	3/4" CPVC TEE
2	64D	130010.0096	1/2x1/2x3/4 CPVC TEE
6	64E	130010.0035	3/4"X1/2"X1/2" CPVC TEE
6	64F	130010.0037	3/4"X1/2"X3/4" CPVC TEE
6	64G	130010.0005	3/4"X3/4"X1/2" CPVC TEE
1	64M	130010.0099	1x3/4x3/4 CPVC TEE
2	650A	130050.0109	1/2" Hose Bib
2	670A	130005.0105	1 1/2" WATCO TUB OVERFLOW ASSEMBLY
1	90A	130035.0080	Shut-Off Valve
1	90B	130050.0090	3/4" SHUT-OFF GATE VALVE

Plumlnth REPORT

Thu Oct 05 10:45:39 2006
p:*fl*houses 05*westcott*mechanical*flawctbp.plm

QUANTITY	DESCRIPTION	
149'	130010.0012	3/4" CPVC PIPE
141'	130010.0025	.5" CPVC PIPE
4'	130010.0056	1" CPVC PIPE
13'	130025.0006	1/2" COPPER Pipe

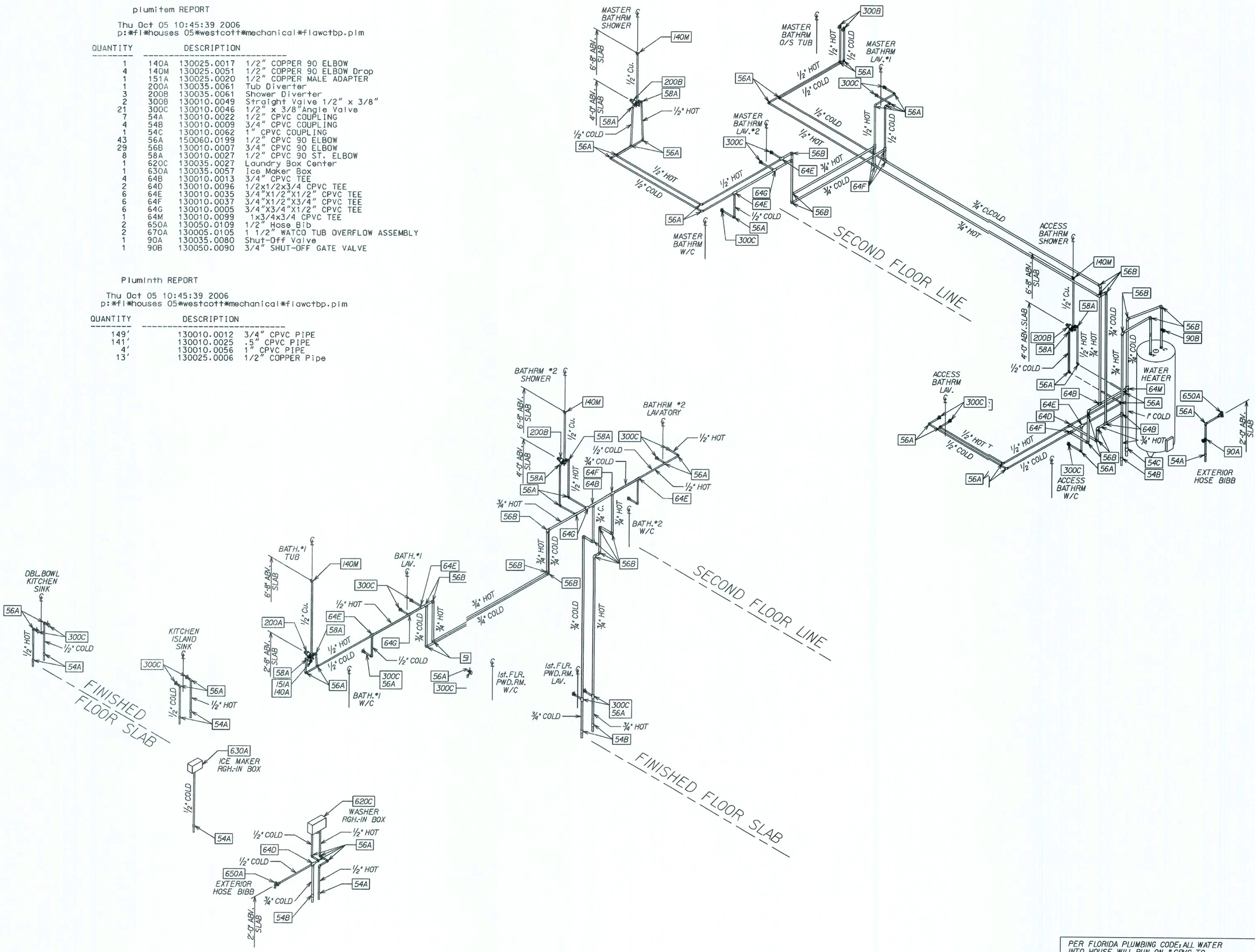

PER FLORIDA PLUMBING CODE; ALL WATER INTO HOUSE WILL RUN ON 1" CPVC TO FIRST FIXTURE GROUP.
REVISED 10-03-06

FLORIDA BUILDING CODE 2004 : RESIDENTIAL

REVISIONS :
10/04/06 UPDATED WATER LINES/BOM TJM

Maronda Homes
(407) 321-0064 4005 MARONDA WAY SANFORD, FLORIDA

FLORIDA:
THIS STRUCTURE WAS DESIGNED IN ACCORDANCE AND MEETS THE REQUIREMENTS OF THE FLORIDA BUILDING CODE 2004 RESIDENTIAL AND 2005, 2006 SUPPLEMENT

p:\fl\houses_05\westcott\mechanical\flawctbp.iso

AMERICANA | CPVC WATER ISO
WESTCOTT
ELEVATION "ALL"
GARAGE:
DRAWN BY: T.J.TOOMEY
RELEASE DATE: 09-10-04
13:57:44
PLOT DATE: 12 DEC 2007

SHEET: ISO-W

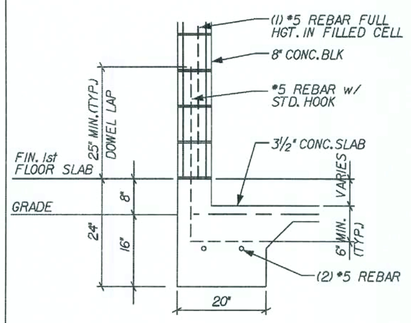

G2 GARAGE 2-STORY
REVISED 11-07-06 DELETED STONE LEDGE
SCALE: ½" = 1'-0"

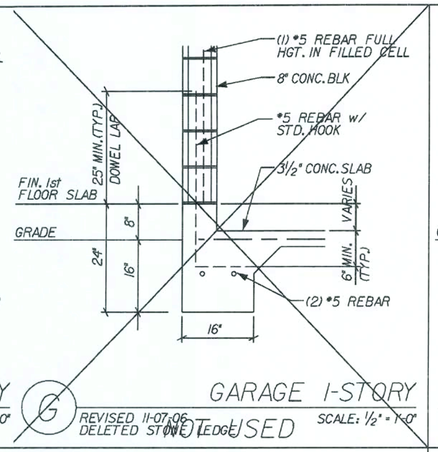

G GARAGE 1-STORY
REVISED 11-07-06 DELETED STONE LEDGE
NOT USED
SCALE: ½" = 1'-0"

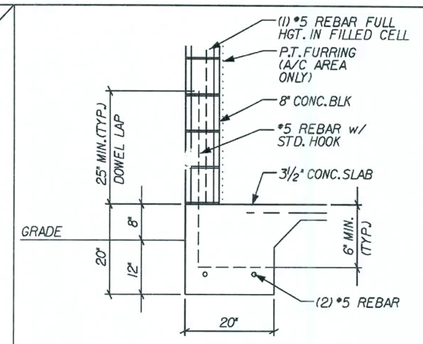

A2 TYPICAL 2-STORY
REVISED 11-07-06 DELETED STONE LEDGE
SCALE: ½" = 1'-0"

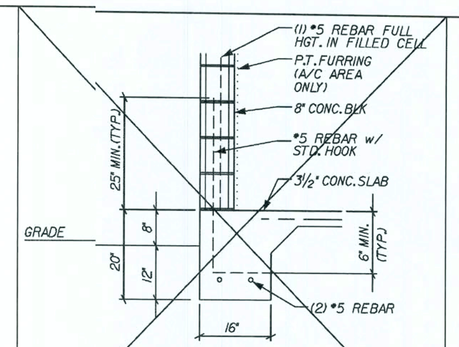

A TYPICAL 1-STORY
REVISED 11-07-06 DELETED STONE LEDGE
NOT USED
SCALE: ½" = 1'-0"

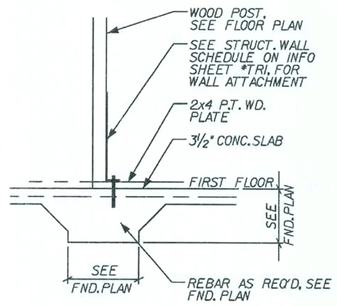

J INTERIOR BEARING POST
SCALE: ½" = 1'-0"

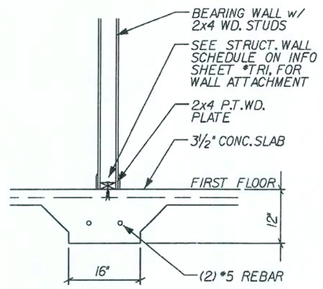

I INTERIOR BEARING
SCALE: ½" = 1'-0"

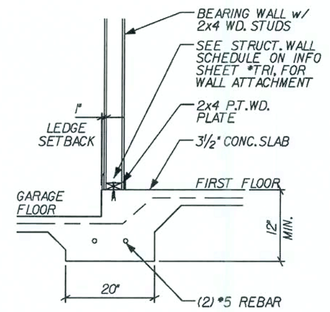

H STEP/BEARING
REVISED 01-31-05
SCALE: ½" = 1'-0"

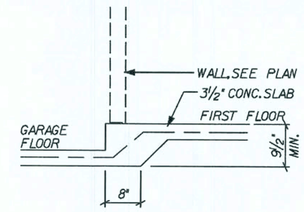

F STEP/NON-BEARING
SCALE: ½" = 1'-0"

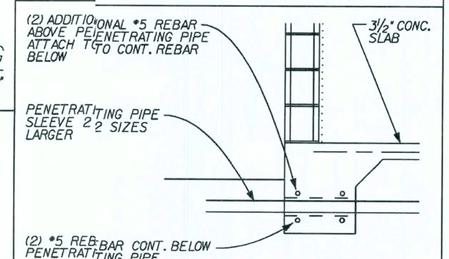

TYP. PIPE PENETRATION
REVISED 06-01-06 ADDED DETAIL
SCALE: ½" = 1'-0"

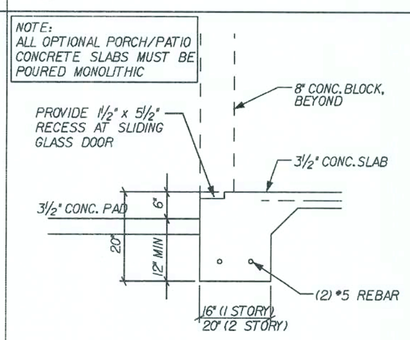

S RECESS @ SLIDER
REVISED 05-06-05
SCALE: ½" = 1'-0"

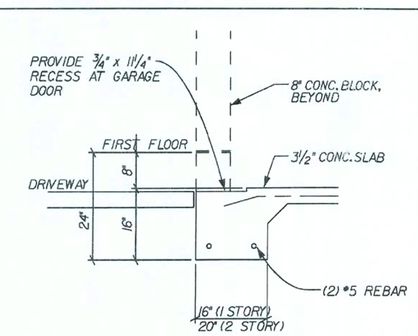

R THICK'N EDGE/GARAGE
REVISED 04-23-06
SCALE: ½" = 1'-0"

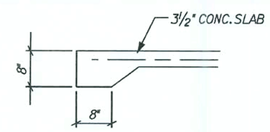

N THICK'N EDGE
SCALE: ½" = 1'-0"

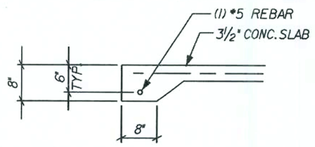

P THICK'N EDGE/BEARING
SCALE: ½" = 1'-0"

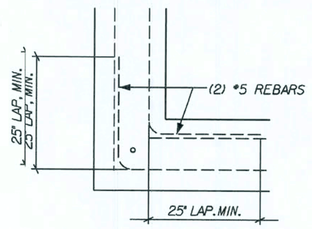

TYP. FTNG @ INSIDE CORNER
SCALE: ½" = 1'-0"

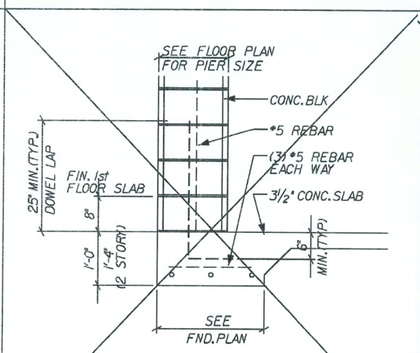

U PIER DETAIL #2
REVISED 02-20-07 16" DEEP @ 1½ STORY
NOT USED
SCALE: ½" = 1'-0"

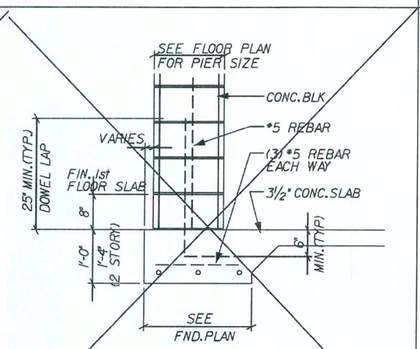

T PIER DETAIL #1
REVISED 02-20-07 16" DEEP @ 2 STORY
NOT USED
SCALE: ½" = 1'-0"

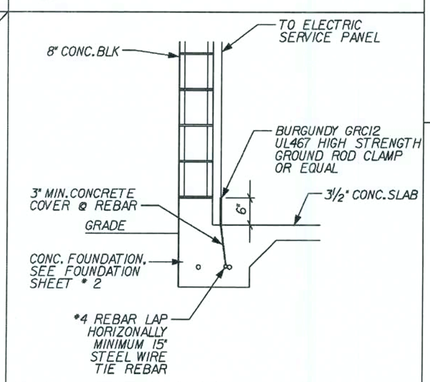

TYP. CONC. ENCASED ELECTRODE
SCALE: ½" = 1'-0"

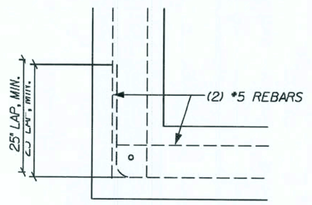

TYP. FTNG @ OUTSIDE CORNER
SCALE: ½" = 1'-0"

REVISIONS :

Maronda Homes
(407) 321-0064 4005 MARONDA WAY SANFORD, FLORIDA

FLORIDA
THIS STRUCTURE WAS DESIGNED IN ACCORDANCE AND MEETS THE REQUIREMENTS OF THE FLORIDA BUILDING CODE 2004 : RESIDENTIAL AND2005, 2006 SUPPLEMENT

FOOTINGS A STANDARD DETAILS

WESTCOTT

GARAGE:
DRAWN BY:
RELEASE DATE: 09/01/04

Maronda Systems
4005 Maronda Way
Sanford, FL 32771
(407)321-0064

Elmer Bergman, P.E.
License No. 50158

MAR 26 2008

SHEET:
FTG

PLOT DATE: 12 DEC 2007
13-49.30
p:\houses_05\westcott\dtl\wcl-std.ftg

FLORIDA BUILDING CODE 2004 : RESIDENTIAL

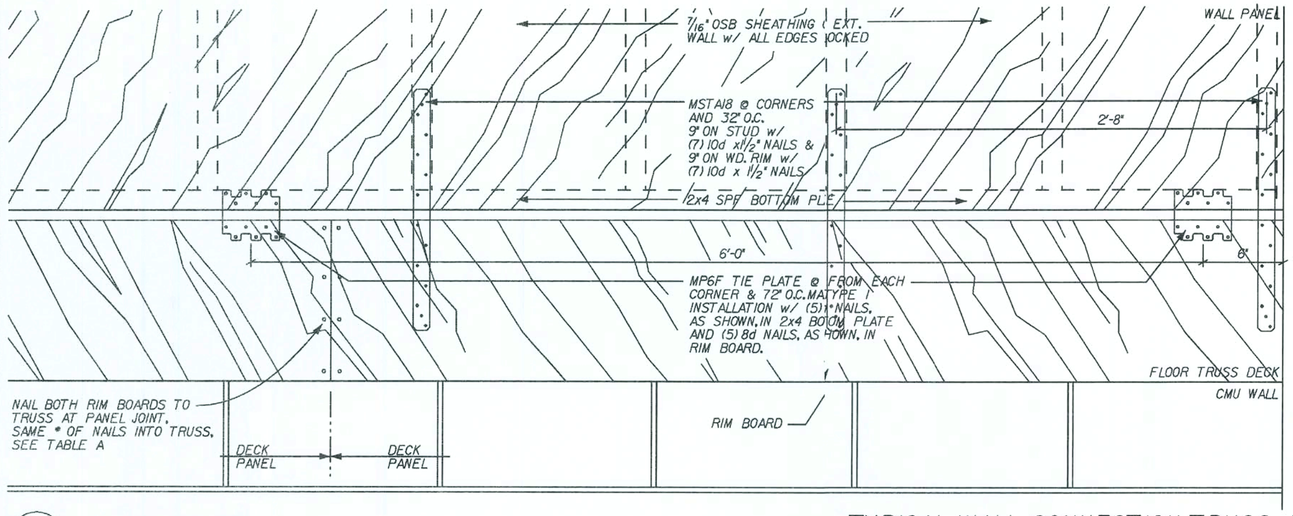

J — TYPICAL WALL CONNECTION-TRUSS FLOOR

SCALE: 1 1/2" = 1'-0"

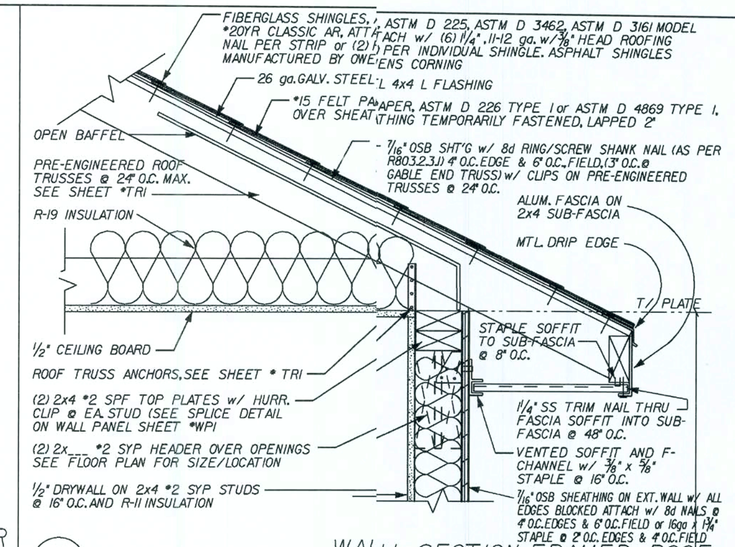

C — WALL SECTION-FRAMED ROOF

REVISED 05-02-07 - OSB ROOF NAIL TYPE

SCALE: 1 1/2" = 1'-0"

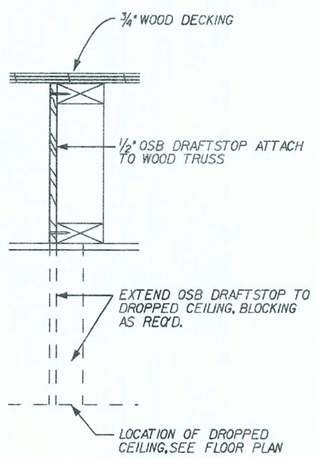

H — DRAFT STOPPING-TRUSS FLOOR

SCALE: 1 1/2" = 1'-0"

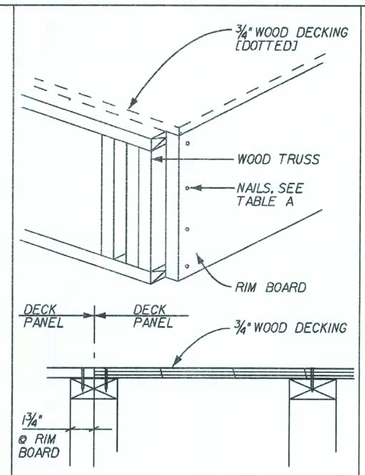

G — DECK CONNECTION @ PANEL JOINT TRUSS FLOOR

SCALE: 1 1/2" = 1'-0"

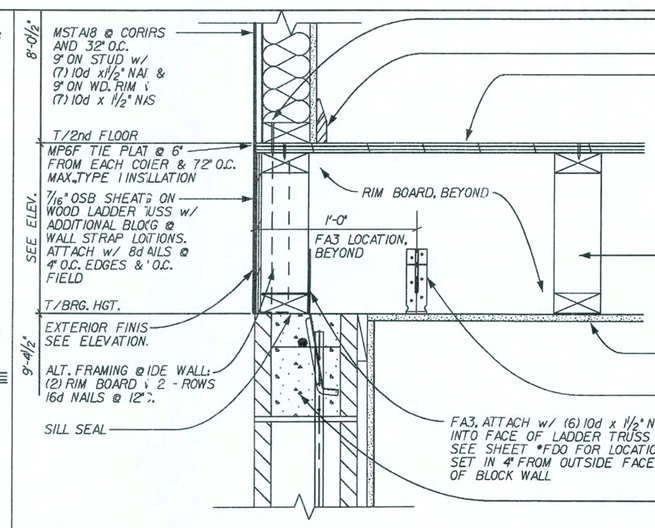

E — PARTIAL SECTION-TRUSS FLOOR SIDE WALL

REVISED 05-02-07 FLOOR DECK NAIL'G

SCALE: 1 1/2" = 1'-0"

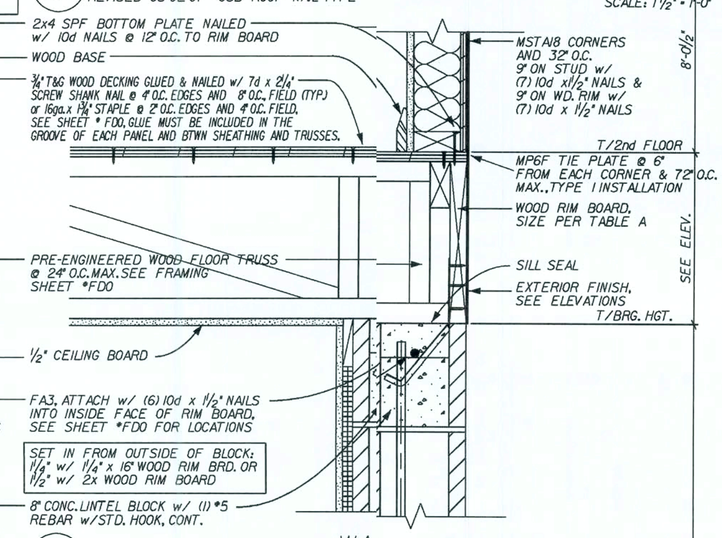

B — WALL SECTION-TRUSS FLOOR

REVISED 05-02-07 FLOOR DECK NAIL'G

SCALE: 1 1/2" = 1'-0"

TABLE A

TRUSS DEP.	RIM BD.	# NAILS, RIM BRD. TO FLOOR TRUSS
9 1/4"	2x10	(4) 10d NAILS
11 1/4"	2x12	(6) 10d NAILS
16"	1 1/4" x 16"	(6) 10d NAILS

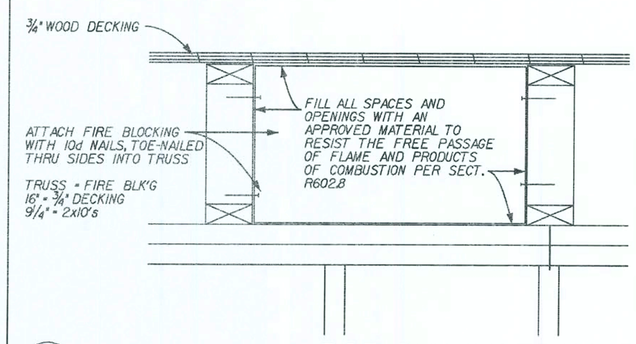

F — FIRE BLOCKING-TRUSS FLOOR

REVISED 05-05-06 REV. NOTE @ OPENINGS

SCALE: 1 1/2" = 1'-0"

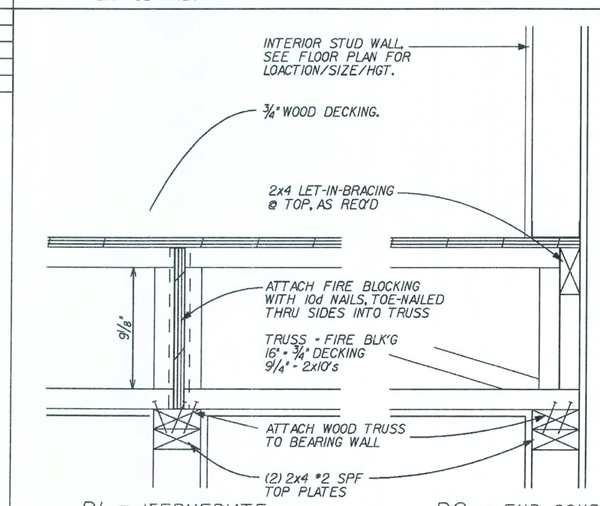

D1 @ INTERMEDIATE D2 @ END CONDITION

D — TYPICAL INTERIOR BEARING WALL-TRUSS FLOOR

REVISED 10-04-07 LET-IN BRING NOTE

SCALE: 1 1/2" = 1'-0"

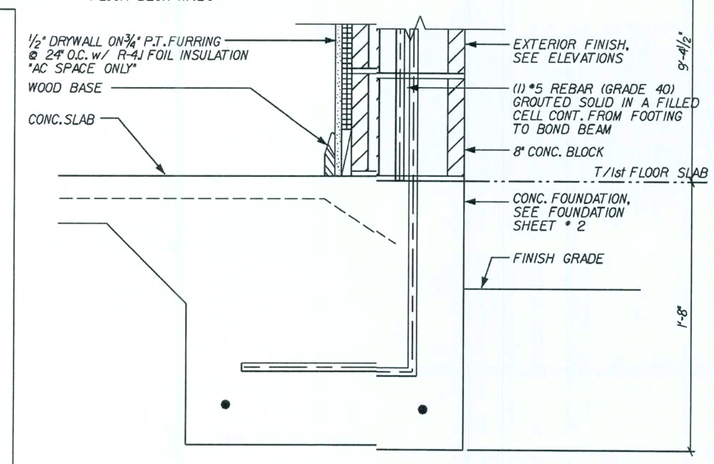

A — WALL SECTION-FOUNDATION @ BLOCK

REVISED 02-19-07 FOIL INSUL TO R-4.1

SCALE: 1 1/2" = 1'-0"

REVISIONS :

Maronda Homes
(407) 321-0064 4005 MARONDA WAY SANFORD, FLORIDA

FLORIDA:
THIS STRUCTURE WAS DESIGNED IN ACCORDANCE AND MEETS THE REQUIREMENTS OF THE FLORIDA BUILDING CODE RESIDENTIAL 2004 SUPPLEMENT

p:\houses_05\westcott\fl\std_ws-s1.sws

TWO STORY | WALL SECTION

WESTCOTT

GARAGE:

DRAWN BY:

RELEASE DATE: 09/01/04

13-49.30

Maronda Systems
4005 Maronda Way
Sanford, FL 32771
(407)321-0064

Elmer Bergman, P.E.
License No. 50158

MAR 26 2008

PLOT DATE: 12 DEC 2007

SHEET:

WS-S1

FLORIDA BUILDING CODE 2004 : RESIDENTIAL

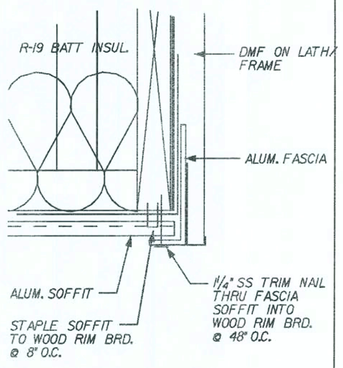

F SOFFIT CONNECTION-TRUSS FLOOR

SCALE: 3" = 1'-0"

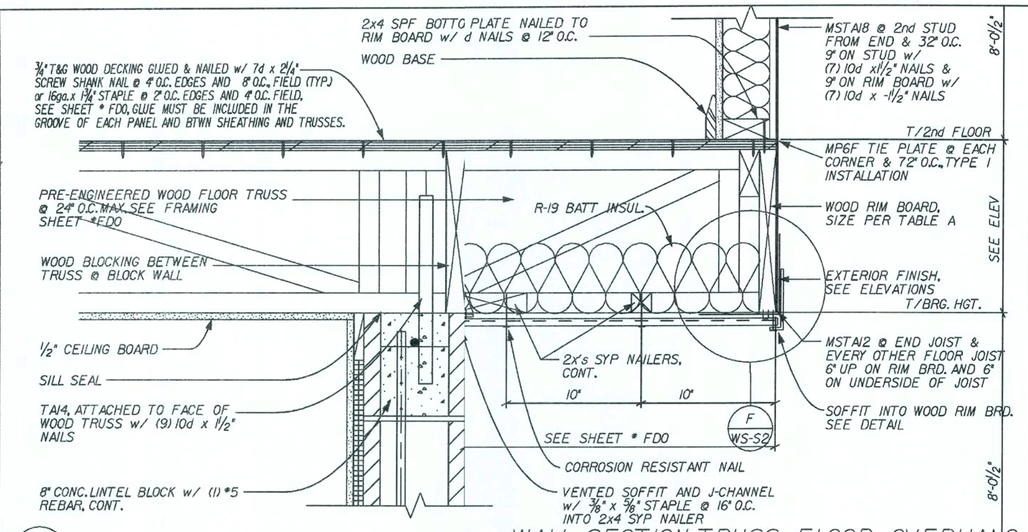

E WALL SECTION-TRUSS FLOOR OVERHANG

REVISED 05-02-07 FLOOR DECK NAIL'G

SCALE: 1½" = 1'-0"

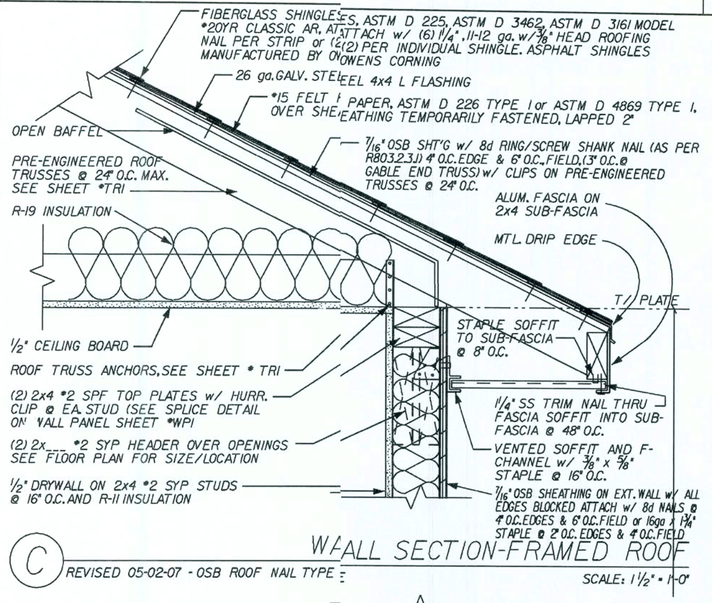

C WALL SECTION-FRAMED ROOF

REVISED 05-02-07 - OSB ROOF NAIL TYPE

SCALE: 1½" = 1'-0"

TABLE A

TRUSS DEP.	RIM BD.	* NAILS, RIM BRD. TO FLOOR TRUSS
9¼"	2"	(4) 10d NAILS
11¾"	2"	(6) 10d NAILS
16"	1" x 16"	(6) 10d NAILS

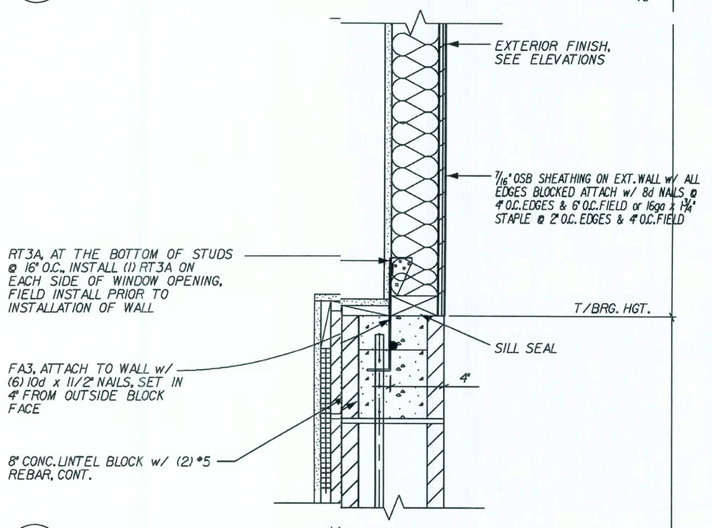

B WALL SECTION-OPEN SPACE

REVISED 10-25-07 - RT3A AND FA3

SCALE: 1½" = 1'-0"

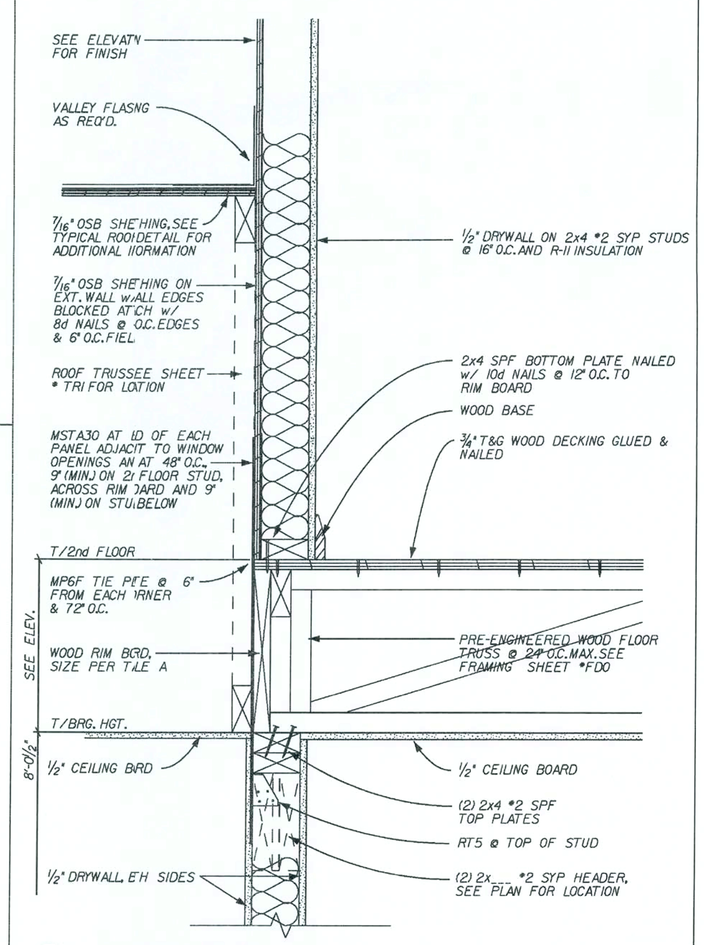

D PARTIAL SECTION-TRUSS FLOOR/BEARING WALL

REVISI 01-04-07 FLOOR/ECK NAIL'G

SCALE: 1½" = 1'-0"

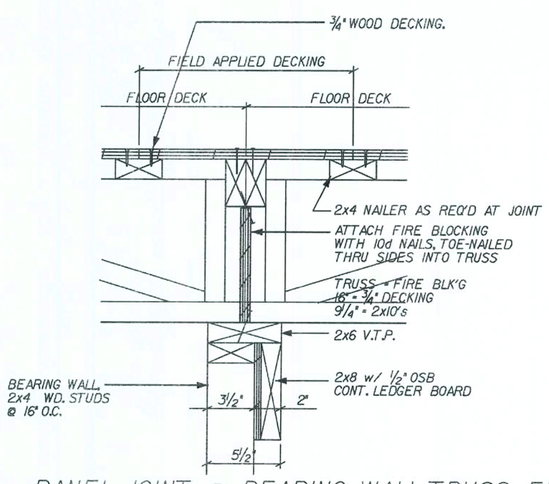

H PANEL JOINT @ BEARING WALL-TRUSS FLOOR

REVISED 12-04-07 : REV. FIRE BLOCKING

SCALE: 1½" = 1'-0"

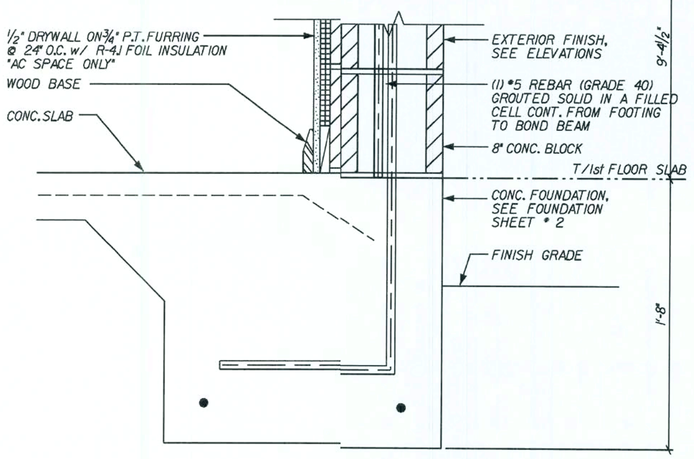

A WALL SECTION-FOUNDATION @ BLOCK

REVISED 02-19-07 FOIL INSUL TO R-41

SCALE: 1½" = 1'-0"

REVISIONS :

Maronda Homes
(407) 321-0064 4005 MARONDA WAY SANFORD, FLORIDA

FLORIDA:
THIS STRUCTURE WAS DESIGNED IN ACCORDANCE AND MEETS THE REQUIREMENTS OF THE FLORIDA BUILDING CODE 2004 RESIDENTIAL AND 2006 SUPPLEMENT

TWO STORY

WALL SECTIONS

WESTCOTT

GARAGE:

DRAWN BY:

RELEASE DATE: 09/01/04

Maronda Systems
4005 Maronda Way
Sanford, FL 32771
(407)321-0064

Elmer Bergman, P.E.
License No. 50158

MAR 26 2008

SHEET:

WS-S2

PLOT DATE: 12 DEC 2007

13-493.31

p:\houses_05\westcott\dfl\sfd_ws-s2.sws

FLORIDA BUILDING CODE 2004 : RESIDENTIAL

USP HARDWARE - 160% REVISED 05-10-06

PRODUCT CODE #	MAN.	FASTENERS	UPLIFT
C44	USP	POST (6) 16d BEAM (6) 10d X 1½"	1000
FA3	USP	TOP (4) 10d X 1½" SIDE (2) 10d X 1½"	1155
HC520 CLIP	USP	PLATES (11) 8d STUD (6) 8d	445
HHCP2 CRNR CLIP	USP	TRUSS (10) 10d X 1½" PLATE (10) 10d X 1½"	800
HTA 20 ANCHOR	USP	(14) 10d X 1½"	1615
HTA 20(2) ANCHOR	USP	(13) 10d X 1½"	3230
HTW24	USP	(20) 10d	1325
HUGT2	USP	CONC. ANC.BOLT (2)3/4"-(2)¾"WASH 3¼" EMBED. -ALL GRDR.-(8) 10d	9790
HUGT3	USP	CONC. ANC.BOLT (2)3/4"-(2)¾"WASH 3¼" EMBED. -ALL GRDR.-(8) 10d	9860
JUS 26	USP	(4) 10d HEADER (4) 10d TRUSS	1115
KST227 STRP ANC.	USP	(34) 16d	4750
LPTA	USP	FACE OF GABLE W/ 2x4 (11) 10d x 1½"	1250
LSTA36	USP	(22) 10d X 1½"	1640
LTW12	USP	(12) 10d	670
LTS20 STRAP ANC	USP	ANCHOR-1/2" WEDGE BOLT 3¼" EMBED. (10) 10d X 1½"STRAP	1890
LBP12 BEARING PLT	USP	½" J-BOLT	2515
LFTA6	USP	PLATE (8) 8d STUD (8) 8d	1035
MP6F	USP	HEADER/STUD (6) 8d TYPE 1 JOIST/PLATE (6) 8d	605
MPAI & MPAIF	USP	HEADER/STUD (6) 8d JOIST/PLATE (6) 8d	660
MSTAI2	USP	(10) 10d	1015
MSTAI8	USP	(14) 10d	1420
MSTA24	USP	(18) 10d	1640
MSTA30	USP	(22) 10d	2065
MTW12	USP	(14) 10d	1030
MTW18	USP	(14) 10d	1030
MTS27B STRP ANC	USP	(24) 16d (1)¾" ANCHOR BOLT 3¼" EMBEDDED	4635
MUGT15	USP	(22) 10d (1)⅝" ANCHOR BOLT 3¾" EMBEDDED	4165
NP37 3⅛X 7	USP	HEADER (6) 16d TOP OF BOT. SEC.(6) 10d X 1½"	
PA 28	USP	(15) 16d	3360
RT-16	USP	TOP PLATES (8) 8d TRUSS (8) 8d X 1½"	1030
RT-16A	USP	TRUSS (9) 10d x 1½" PLATE (8) 10d	1380
RT16-2	USP	TOP PLATES (8) 8d TRUSS (8) 8d X 1½"	1160
RT5 CLIPS L/R	USP	TRUSS (4) 8d PLATE (4) 8d	540
RT3 CLIPS L/R	USP	(4) 8d TOP (4) 8d BOTTOM	530
SKH 26 L\R	USP	HEADER (6) 16d JACK (6) 10d X 1½"	1085
SKHH26 L/R	USP	HEADER (18) 16d JACK (12) 10d X 1½"	2190
SUH 26	USP	HEADER (6) 10d JACK (4) 10d X 1½"	725
SUH 28	USP	HEADER (8) 10d JACK (6) 10d X 1½"	800
TAI2 TA 12/METAL	USP	(5) #10 SCREWS (9) #10 SCREWS	825 910
TA 14	USP	(7) 10d x 1½"	920
TA 18	USP	(8) 10d x 1½"	1205
(2)TA 18	USP	(8) 10d x 1½" 1-PLY (8) 10d x 1½" 2-PLY	2410 2410
TA 24	USP	(8) 10d x 1½"	1205
(2)TA 24	USP	(8) 10d x 1½" 1-PLY (8) 10d x 1½" 2-PLY	2410 2410
THD26	USP	HEADER (18) 16d TRUSS (12) 10d X 1½"	2170
THD28	USP	HEADER (28) 16d TRUSS (16) 10d X 1½"	2330
THD28-2	USP	HEADER (28) 16d TRUSS (16) 10d X 1½"	2485
THDH28-3	USP	HEADER (36) 16d TRUSS (16) 10d X 1½"	2665
THD48	USP	HEADER (28) 16d TRUSS (16) 10d X 1½"	2485
THJ 26 2	CLEVELAND	HIP(7)10d-HEADER(16)16d JACK (5) 10d x1½"	1010
USC63	USP	TRUSS (8) 10d (4)¾" EXP. BOLTS #6170 2¾" EMBEDDED	11150
USC3F	USP	TRUSS (8) 10d (4)¾" EXP. BOLTS #6170 2¾" EMBEDDED	11150
USC73	USP	TRUSS (8) 16d (4)¾" EXP. BOLTS #6170 2¾" EMBEDDED	11150
UGTS63	USP	TRUSS (8) 16d (2)¾" ANC. BOLTS 2¾" EMBEDDED	6170

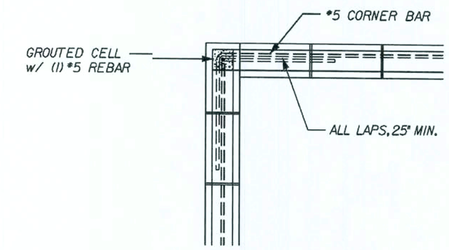

TYPICAL BOND BEAM @ CORNER

REVISED 04-22-05 SCALE: ½" = 1'-0"

NOT USED

CONNECTOR	MAX. UPLIFT
LTW12	775 LBS
LFTA6	9[illegible] LBS
RT16	7[illegible] LBS

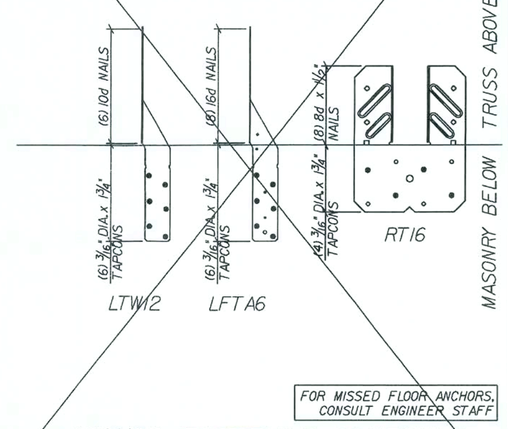

FOR MISSED FLOOR ANCHORS, CONSULT ENGINEER STAFF

ANCHOR FASTENING SCHEDULE
MISSED ROOF TIE DOWN REPAIR

SCALE: N.T.S.

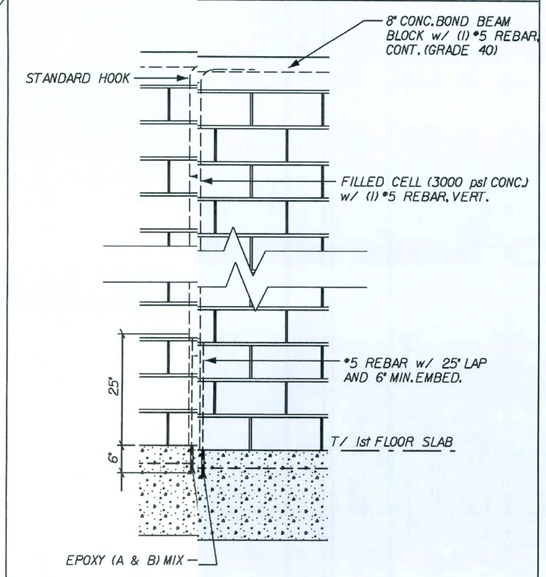

MISSED DOWN ROD REPAIR

SCALE: ½" = 1'-0"

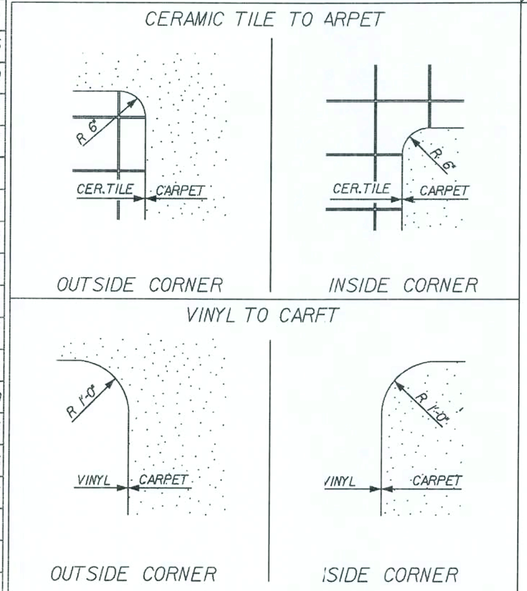

FLOOR EDGE CORNER DETAIL

SCALE: ½" = 1'-0"

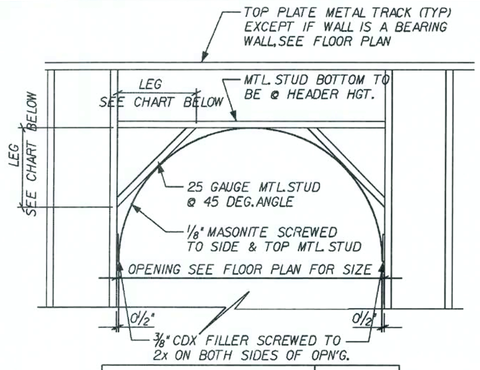

OPENING	LEGS
2'-1" = 2'-0" ARCH OPENING	7½"
2'-7" = 2'-6" ARCH OPENING	8⅞"
2'-9" = 2'-8" ARCH OPENING	9 7/16"
3'-1" = 3'-0" ARCH OPENING	10 5/8"
4'-1" = 4'-0" ARCH OPENING	15"
-	-

INTERIOR CURVED ARCH

SCALE: ½" = 1'-0"

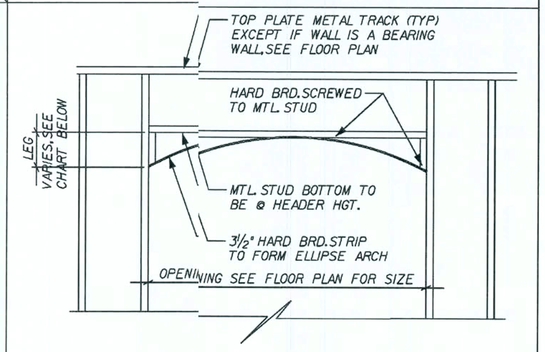

OPENING	LEGS
2'-0" - 3'-1"	4"
3'-2" - 4'-0"	5½"
4'-1" - 5'-0"	6½"
5'-1" - 7'-0"	8"
7'-1" - 9'-0"	9½"
9'-1" - 12'-0"	12"

INTERIOR ELLIPSE ARCH

SCALE: ½" = 1'-0"

REVISIONS :

Maronda Homes
(407) 321-0064 4005 MARONDA WAY SANFORD, FLORIDA

FLORIDA: THIS STRUCTURE WAS DESIGNED IN ACCORDANCE AND MEETS THE REQUIREMENTS OF THE FLORIDA BUILDING CODE 2004 : RESIDENTIAL AND 2006 SUPPLEMENT

AMERICANA STANDARD DETAILS

WESTCOTT

GARAGE:

DRAWN BY:

RELEASE DATE: 09/01/04

13:49:32

PLOT DATE: 12 DEC 2007

p:\f\houses_05\westcott\dtl\std_details.sdl

Maronda Systems
4005 Maronda Way
Sanford, FL 32771
(407)321-0064

Elmer Bergman, P.E.
License No. 50158

MAR 26 2008

SHEET:

SD1

FLORIDA BUILDING CODE 2004 : RESIDENTIAL

REVISED 02-15-07
83¾" -> 82⅞"

DOOR SCHEDULE

DOOR TYPE	ACTUAL SIZE	ROUGH FRAME OPENING	ROUGH BLOCK OPENING 2" BUCK
2-0 STANDARD I.S.	25½" x 80⅝"	26" x 80⅞"	29" x 82⅜"
2-8 STANDARD I.S.	33½" x 80⅝"	34" x 80⅞"	37" x 82⅜"
2-10 STANDARD I.S.	35½" x 80⅝"	36" x 80⅞"	39" x 82⅜"
3-0 STANDARD I.S.	37½" x 82"	38" x 82¼"	41" x 82⅜"
3-0 w/SIDELIGHT I.S.	51⅛" x 82"	51⅝" x 82¼"	54⅝" x 82⅜"
3-0 w/(2) SIDELIGHT I.S.	64½" x 82"	65" x 82¼"	68" x 82⅜"
5-8 (2)2-10 FRENCH I.S.	70½" x 80⅝"	71" x 80⅞"	74" x 82⅜"

** FINISH OPENING IS DETERMINED BY ACTUAL SIZE +¼" FOR HEIGHT
** FINISH OPENING IS DETERMINED BY ACTUAL SIZE +½" FOR WIDTH
** O.S. = OUTSWING
** I.S. = INSWING

MAX. OPN'G SIZE	JACKS @ EA.END	HEADER SIZE	STUDS @ EA.END 8'-0" MAX.HGT.	TUDS @ EA.END 11' MAX.HGT.	
2'-3"	(1)	2x HEADER, SEE FLOOR PLAN FOR PROPER SIZE FRAMING	1	2	
3'-3"	(1)		2	2	
6'-3"	(1)		2	3	

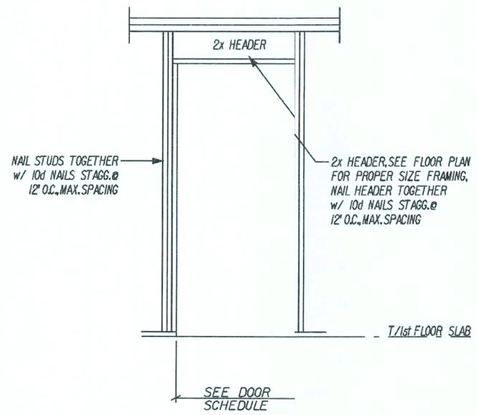

K STD.DOOR - WD FIAME, NO-UPLIFT
SCALE: N.T.S.

MAX. OPN'G SIZE	JACKS @ EA.END	HEADER SIZE	STUDS @ EA.END 8'-0" MAX.HGT.	STUDS @ EA.END 10'-0" MAX.HGT.	MSTA 12
2'-3"	(1)	2x HEADER, SEE FLOOR PLAN FOR PROPER SIZE FRAMING	1	2	N/A
3'-3"	(1)		2	2	(1) @ CEN.OF HDR.
6'-3"	(1)		2	3	(1) @ 2'-0" OFF EA.END OF HDR.

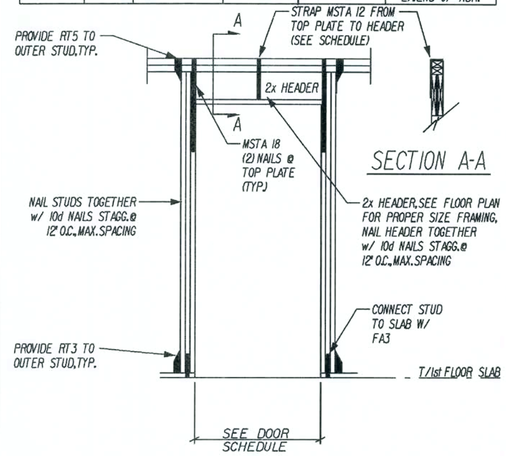

J STD.DOOR - WD FRAME, UPLIFT
SCALE: N.T.S.

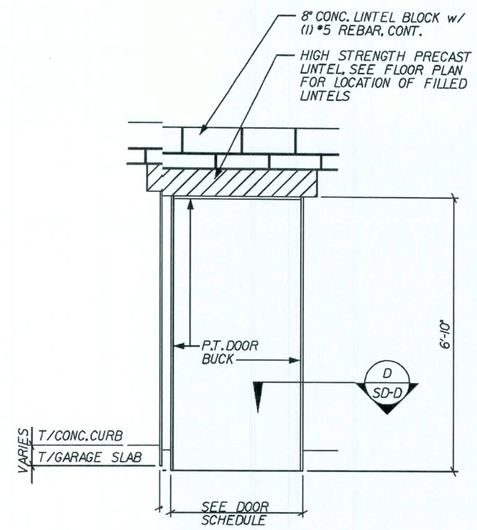

H OPTIONAL SERVICE DOOR
REVISED 08-12-04
SCALE: ⅜" = 1'-0"

CONTRACTOR NOTE:
INSTALLATION FOR GARAGE DOOR TYPES (AS PER TEST #96050T-A)

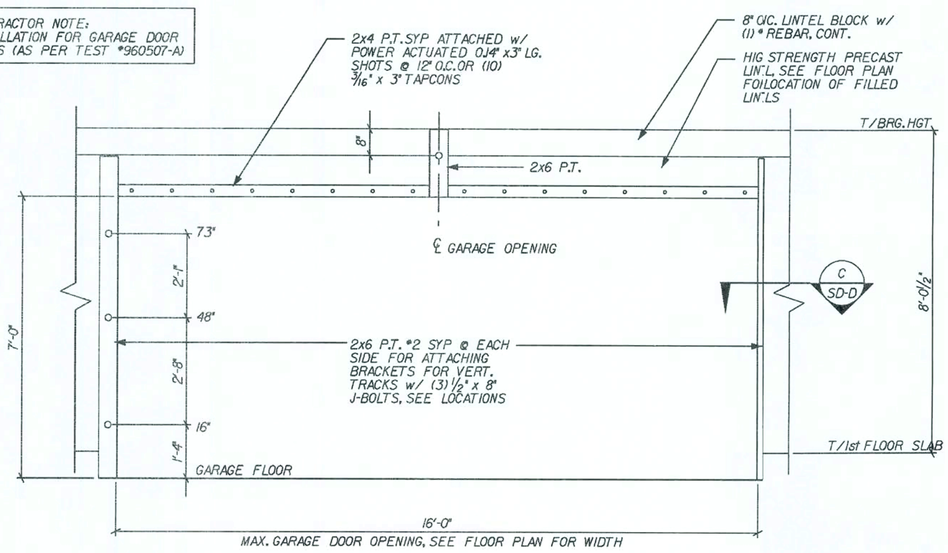

G GARAGE DOR ELEVATION
SCALE: ⅜" = 1'-0"

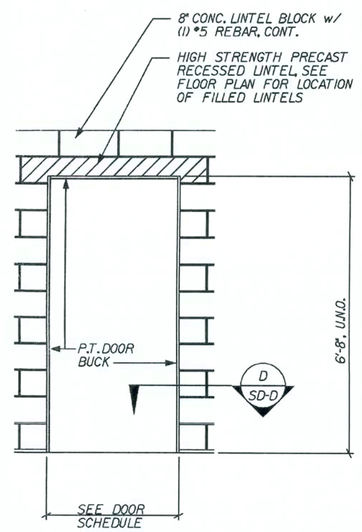

F STANDARD DOOR ELEVATION
SCALE: ⅜" = 1'-0"

CONTRACTOR NOTE:
FOR INSTALLATION SIZES 0 OF NORANDEX SLIDING DOOR SERIES 500 UP TO 8'-0" x 6'-8" AS PER #96-0131J0 & SERIES 502 UP TO 8'-0" x 8'-0" MAX.X. (AS PER TEST #96-0608.20)

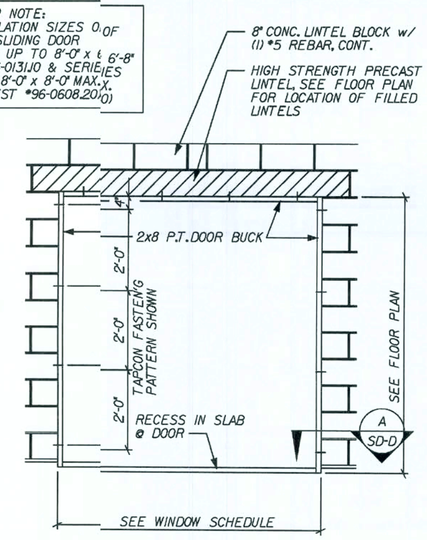

E SLIDING GLASS DOOR ELEVATION
SCALE: ⅜" = 1'-0"

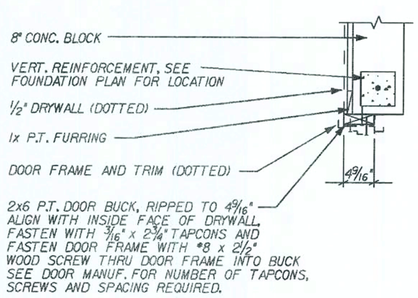

D 2x DOOR BUCK DETAIL
SCALE: ¾" = 1'-0"

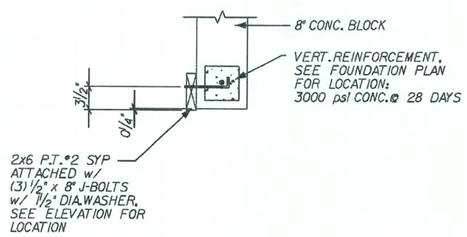

C GARAGE DOOF BUCK DETAIL
SCALE: ¾" = 1'-0"

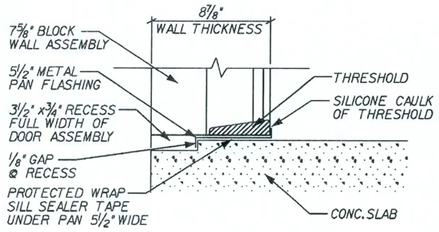

B DOOR PAN FLASHING
REVISED 06-08-06
NEW DETAIL
SCALE: ¾" = 1'-0"

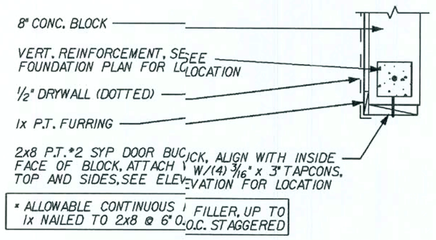

* ALLOWABLE CONTINUOUS FILLER, UP TO 1x NAILED TO 2x8 @ 6" O.C. STAGGERED

A SLIDING GLASS DOOR BUCK DETAIL
REVISED 10-21-04
SCALE: ¾" = 1'-0"

REVISIONS :
07-27-06 ADDED DOOR PAN DETAIL

Maronda Homes
(407) 321-0064 4005 MARONDA WAY SANFORD, FLORIDA

FLORIDA: THIS STRUCTURE WAS DESIGNED IN ACCORDANCE WITH THE REQUIREMENTS OF THE FLORIDA BUILDING CODE 2004 : RESIDENTIAL AND2005, 2006 SUPPLEMENT

AMERICANA | STANDARD DETAILS
WESTCOTT
DOORS OPENINGS
GARAGE:
DRAWN BY:
RELEASE DATE: 09/01/04

Maronda Systems
4005 Maronda Way
Sanford, FL 32771
(407)321-0064

Elmer Bergman, P.E.
License No. 50158

MAR 26 2008

SHEET:
SD-D

PLOT DATE: 12 DEC 2007 13:49:32
p:\f\houses_05\westcott\dth\std_doors.sdd

FLORIDA BUILDING CODE 2004 : RESIDENTIAL

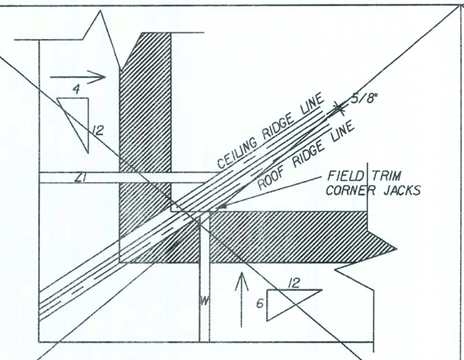

TRUSS PLACEMENT CORNER DETAIL B

NOT USED

SCALE: N.T.S.

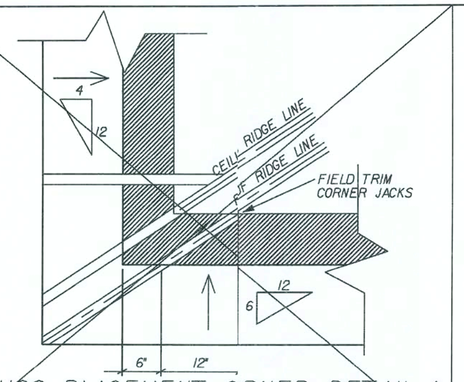

TRUSS PLACEMENT CORNER DETAIL A

NOT USED

SCALE: N.T.S.

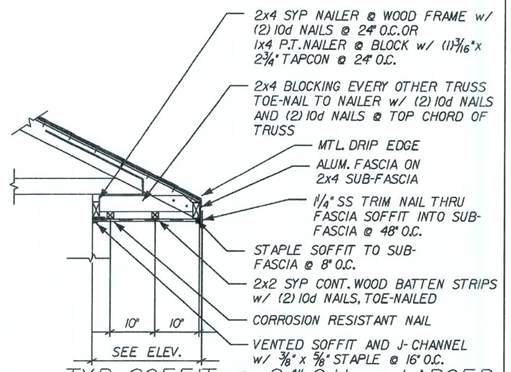

TYP. SOFFIT @ 24" O.H. or LARGER

REVISED 01-11-05

SCALE: 1/2" = 1'-0"

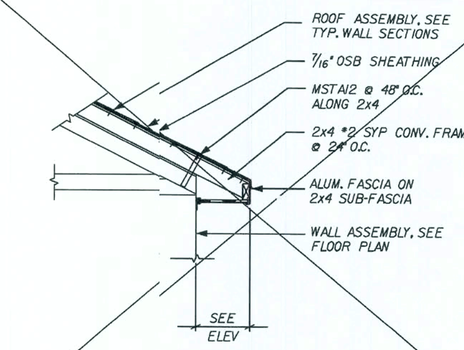

CONV. FRAMED HIP ROOF

NOT USED

SCALE: 1/2" = 1'-0"

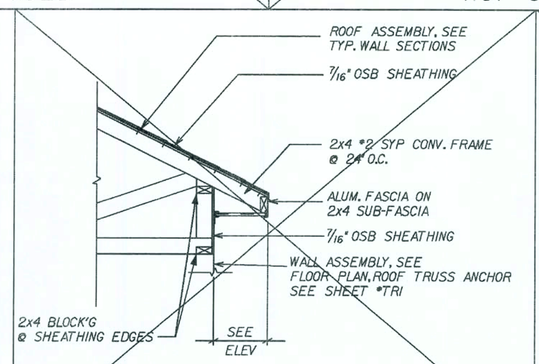

DETAIL @ RAISED HEEL

NOT USED

SCALE: 1/2" = 1'-0"

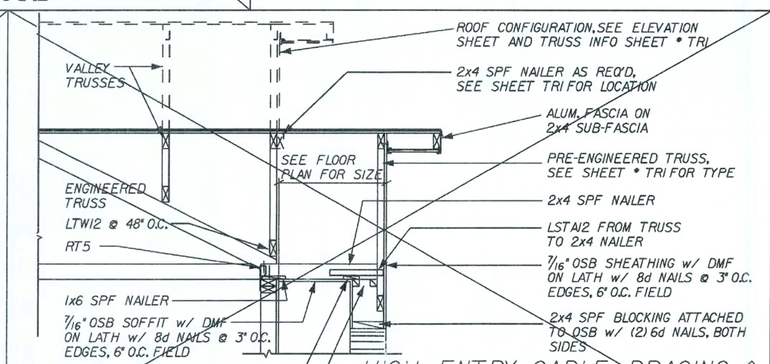

HIGH ENTRY GABLE BRACING & SHEATHING CONNECTION DETAIL

NOTE: GABLE BRACED BY ROOF AND/OR CEILING DIAPHRAGM STRONGBACK AND CONNECTIONS, NO X-BRACING NEEDED.

NOT USED

SCALE: 1/2" = 1'-0"

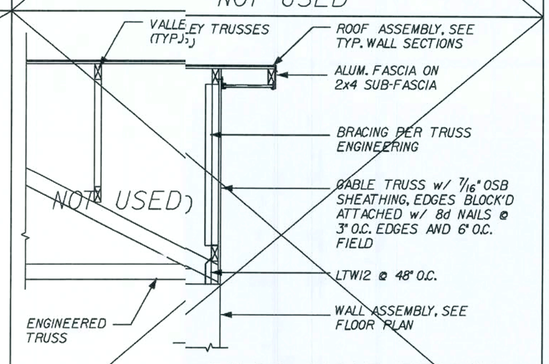

FALSE GABLE BRACING & SHEATHING CONNECTION DETAIL

NOTE: GABLE BRACED BY ROOF AND/OR CEILING DIAPHRAGM STRONGBACK AND CONNECTIONS, NO X-BRACING NEEDED.

SCALE: 1/2" = 1'-0"

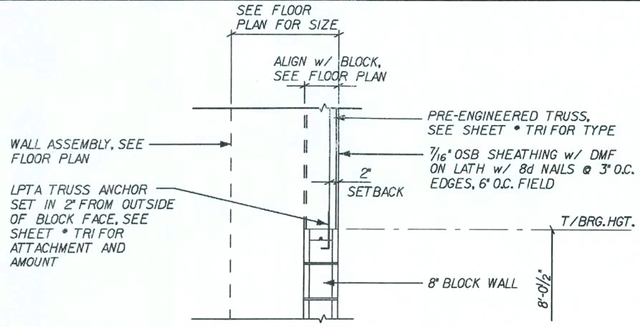

TRUSS / BLOCK CONNECTION DETAIL

SCALE: 1/2" = 1'-0"

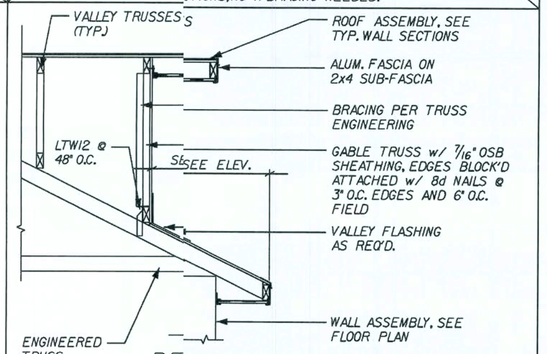

REVERSE GABLE BRACING & SHEATHING CONNECTION DETAIL

NOTE: GABLE BRACED BY ROOF AND/OR CEILING DIAPHRAGM STRONGBACK AND CONNECTIONS, NO X-BRACING NEEDED.

SCALE: 1/2" = 1'-0"

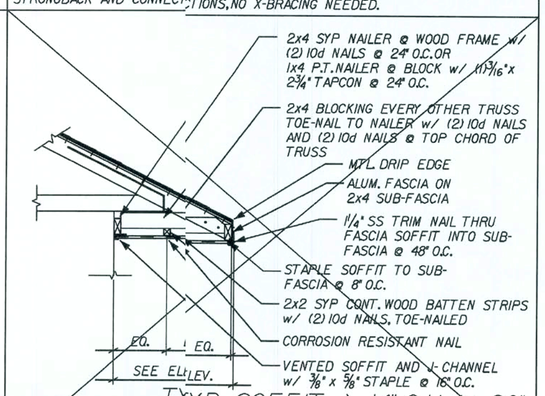

TYP. SOFFIT > 14" O.H. TO 20"

REVISED 12-20-06

NOT USED

SCALE: 1/2" = 1'-0"

REVISIONS :

Maronda Homes

(407) 321-0064 4005 MARONDA WAY SANFORD, FLORIDA

FLORIDA: THIS STRUCTURE WAS DESIGNED IN ACCORDANCE AND MEETS THE REQUIREMENTS OF THE FLORIDA BUILDING CODE 2004 RESIDENTIAL AND 2006 SUPPLEMENT.

AMERICANA

STANDARD DETAILS

WESTCOTT

GARAGE:

DRAWN BY:

RELEASE DATE: 09/01/04

13:49:33

PLOT DATE: 12 DEC 2007

p:\7100\385_05\westcott\dtl\std_roof.sdr

Maronda Systems
4005 Maronda Way
Sanford, FL 32771
(407)321-0064

Elmer Bergman, P.E.
License No. 50158

MAR 26 2008

SHEET:

SD-R

FLORIDA BUILDING CODE 2004 : RESIDENTIAL

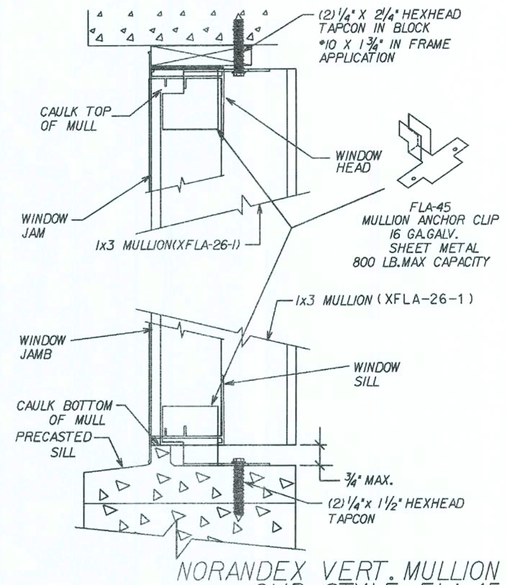

NORANDEX VERT. MULLION CLIP STYLE FLA-45

SCALE: 3/4" = 1'-0"

CONTRACTOR NOTE:
FOR INSTALLATION SIZS OF NORANDEX WINDOW SEIES 437/438 UP TO 53 1/8" . 76 3/8" AS PER TEST #96-06220

STANDARD WINDOW DEAILS IN BLOCK WALLS UP TO 1 FEET HIGH

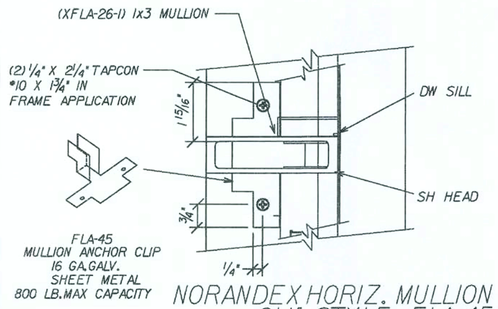

NORANDEX HORIZ. MULLION CLIF STYLE FLA-45

SCALE: 3/4" = 1'-0"

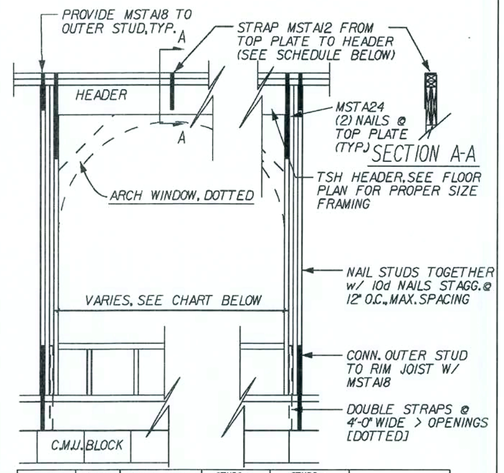

MAX. OPNG SIZE	JACKS @ EA.END	HEADER SIZE	STUDS @ EA.END 8'-0" MAX.HGT.	STUDS @ EA.END 10'-0" MAX.HGT.	MSTA 12
2'-3"	(1)	2x HEADER, SEE FLOOR PLAN FOR PROPER SIZE FRAMING	1	2	N/A
3'-3"	(1)		1	2	(1) @ CEN.OF HDR.
6'-3"	(2)		2	3	(1) @ 2'-0" OFF EA.END OF HDR.

K — TYP. HEADER DETAIL-2ND FLOOR FRAMING

REVISED 06-06-07 : PER WALL PANELS

SCALE: N.T.S.

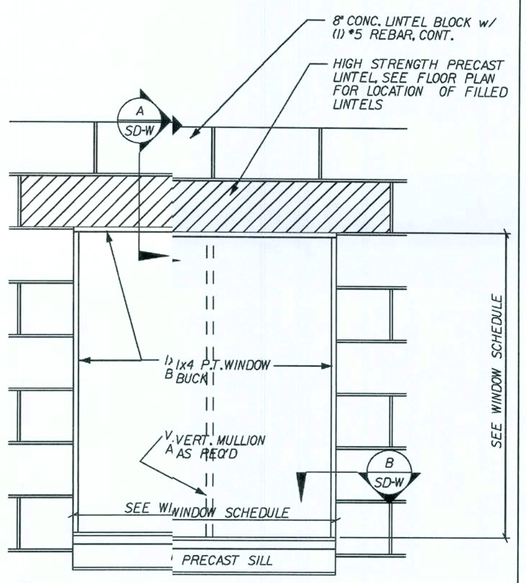

J — WINDOW-STANDARD-BLK

SCALE: 3/4" = 1'-0"

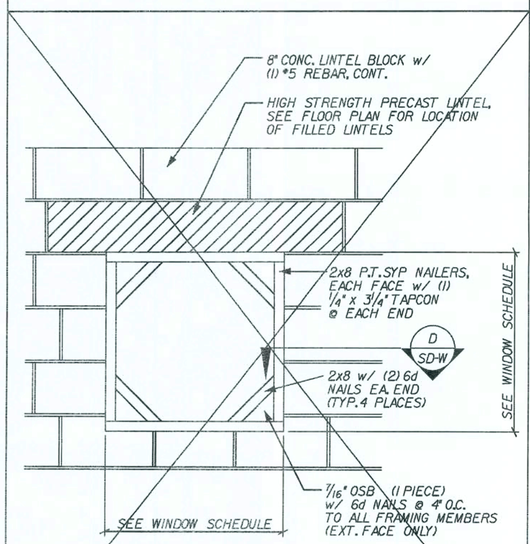

H — WINDOW-OCTAGON-BLK

NOT USED

SCALE: 3/4" = 1'-0"

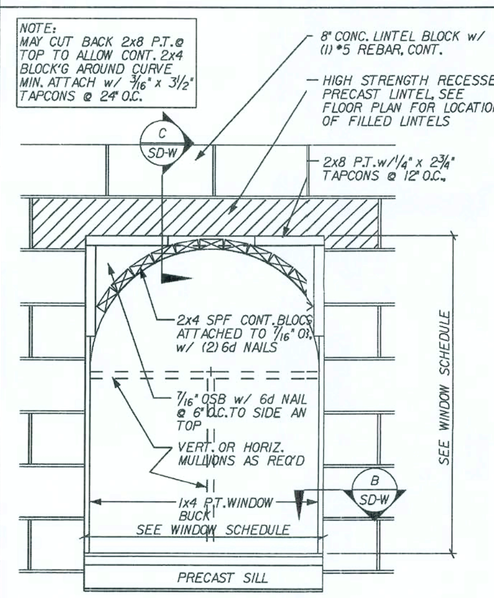

G — WINDOW-1/2 ROUND TOP-BLK

ELEVATION -A

SCALE: 3/4" = 1'-0"

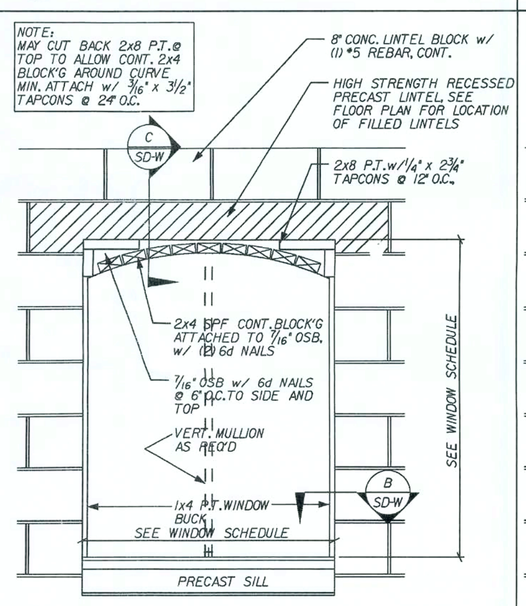

F — WINDOW-EYEBROW-BLK

ELEVATION - E

SCALE: 3/4" = 1'-0"

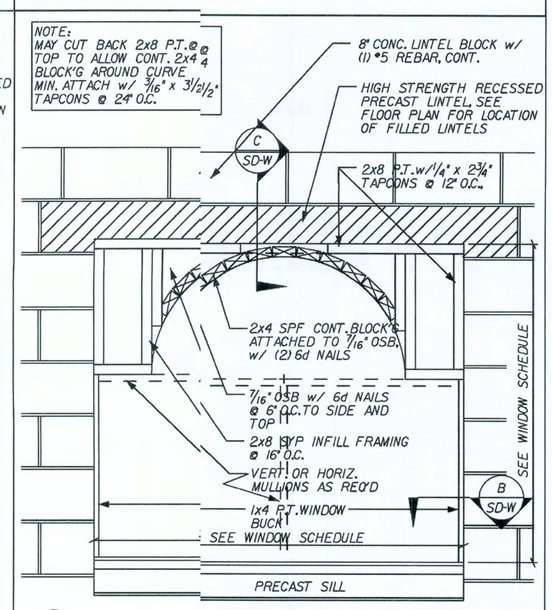

E — WINDOW-COMBINATION-BLK

SCALE: 3/4" = 1'-0"

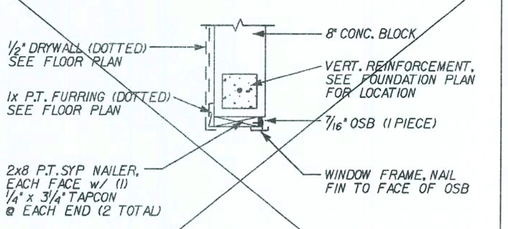

D — WINDOW JAMB-OCTAGON-BLK

NOT USED

SCALE: 3/4" = 1'-0"

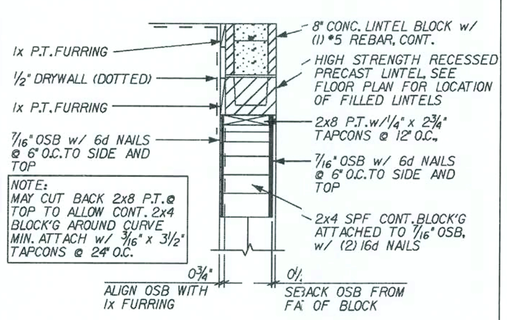

C — WINDOW HEAD-ARH WINDOW-BLK

SCALE: 3/4" = 1'-0"

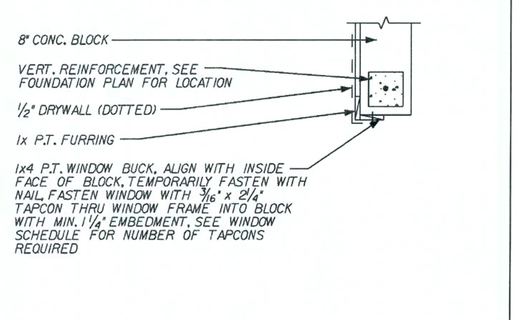

B — WINDOW JAMB-STANDARD-BLK

SCALE: 3/4" = 1'-0"

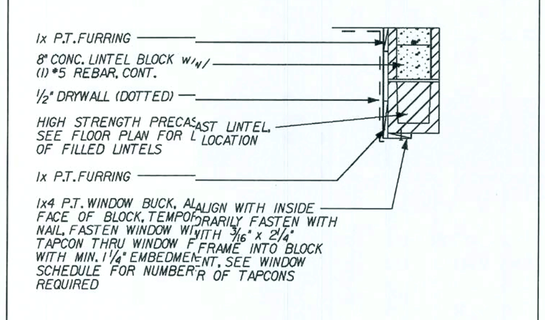

A — WINDOW HEAD-STANDARD-BLK

SCALE: 3/4" = 1'-0"

REVISIONS :

Maronda Homes
(407) 321-0064 4005 MARONDA WAY SANFORD, FLORIDA

FLORIDA
THIS STRUCTURE WAS DESIGNED IN ACCORDANCE AND MEETS THE REQUIREMENTS OF THE FLORIDA BUILDING CODE 2004 RESIDENTIAL AND 2005, 2006 SUPPLEMENT

WINDOWS STANDARD DETAILS

WESTCOTT

GARAGE:

DRAWN BY:

RELEASE DATE: 09/01/04

PLOT DATE: 12 DEC 2007

13-49.34

p:\houses_05\westcott\dfh\std_windows.sdw

Maronda Systems
4005 Maronda Way
Sanford, FL 32771
(407)321-0064

Elmer Bergman, P.E.
License No. 50158

MAR 26 2008

SHEET:

SD-W

FLORIDA BUILDING CODE 2004 : RESIDENTIAL

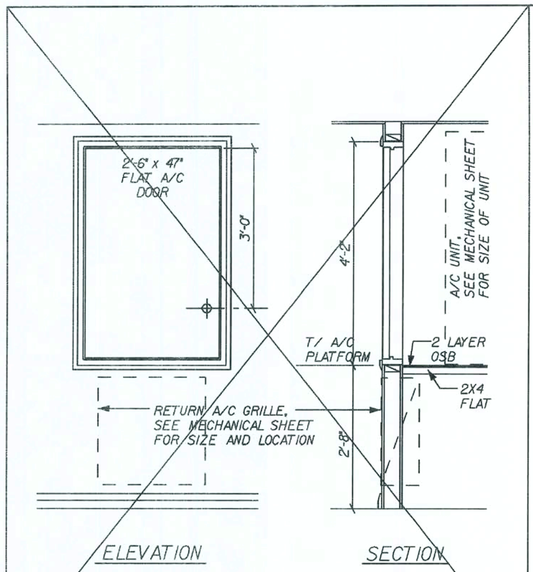

7'-0" CEIL. ENCLOSED A/C PLATFORM

NOT USED

SCALE: 1/2" = 1'-0"

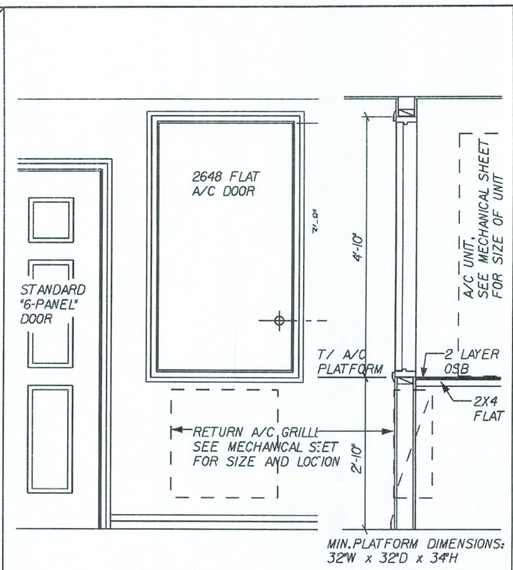

ENCLOSED A/C PLATFORM

SCALE: 1/2" = 1'-0"

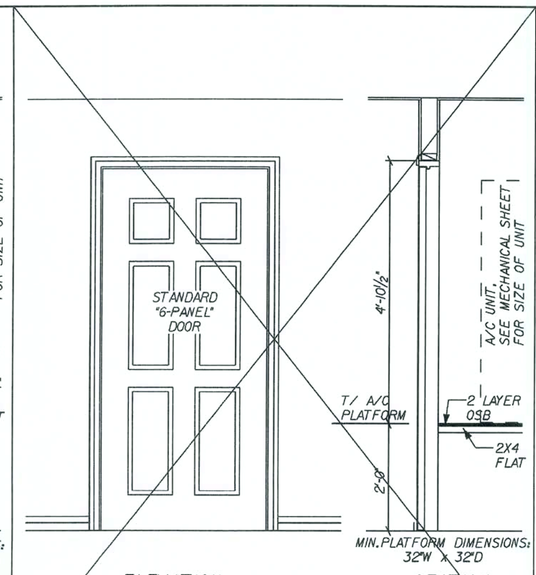

FULL DOOR ENCLOSED A/C PLATFORM

NOT USED

SCALE: 1/2" = 1'-0"

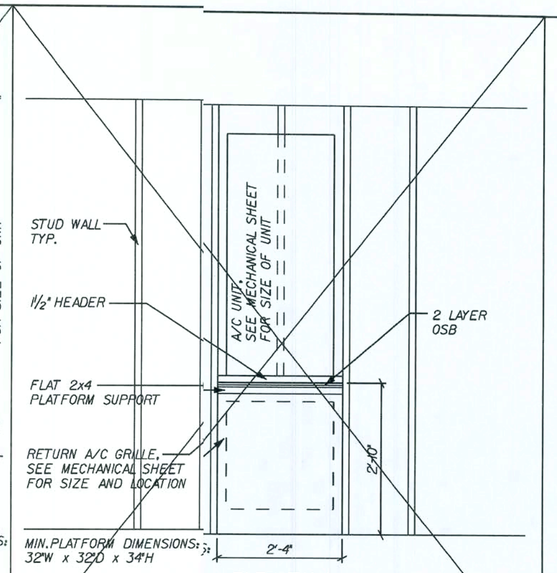

OPEN A/C PLATFORM

NOT USED

SCALE: 1/2" = 1'-0"

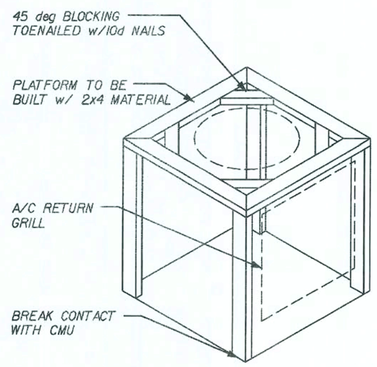

A/C PLATFORM FRAMING

REVISED 01-24-05

SCALE: 1/2" = 1'-0"

REVISIONS :

Maronda Homes

(407) 321-0064 4005 MARONDA WAY SANFORD, FLORIDA

FLORIDA:
THIS STRUCTURE WAS DESIGNED IN ACCORDANCE WITH THE REQUIREMENTS OF THE FLORIDA BUILDING CODE 2004 : RESIDENTIAL AND2005, 2006 SUPPLEMENT

STANDARD PLATFORM DETAILS

AIR-HEAT DTLS

DRAWN BY:

GARAGE:

RELEASE DATE:

p:\f1houses_05\westcott\dtl\std_heating.dh

13:49:34

PLOT DATE: 12 DEC 2007

Maronda Systems
4005 Maronda Way
Sanford, FL 32771
(407)321-0064

Elmer Bergman, P.E.
License No. 50158

MAR 26 2008

SHEET:

SD-H

FLORIDA BUILDING CODE 2004 : RESIDENTIAL

RG OPTIONAL WOOD RAILING AND SPINDELS IN LIEU OF 42" DRYWALL SLOPED WALL

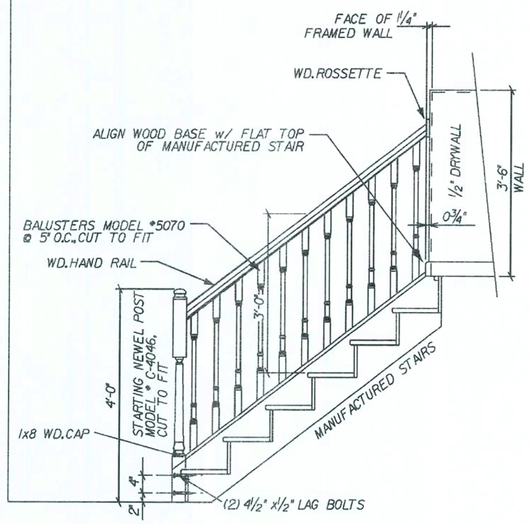

STAIR @ TOP OF LANDING [LEFT]

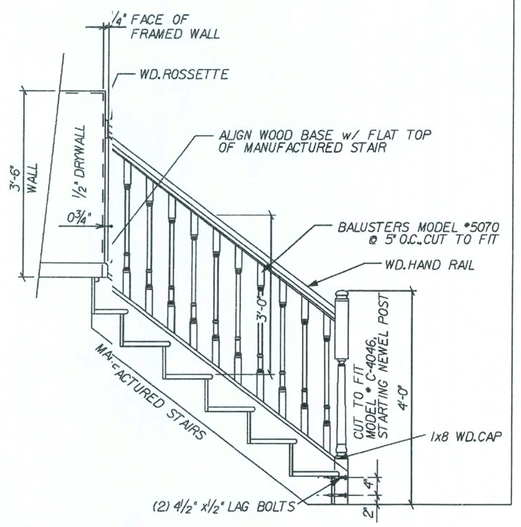

STAIR @TOP OF LANDING [RIGHT]

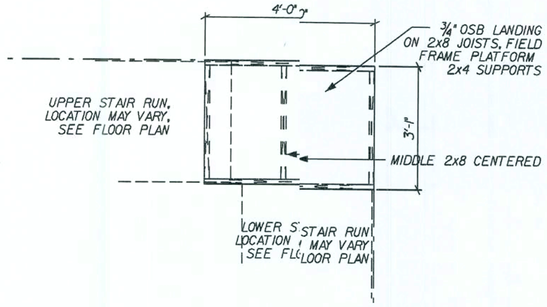

STAIR LANDING

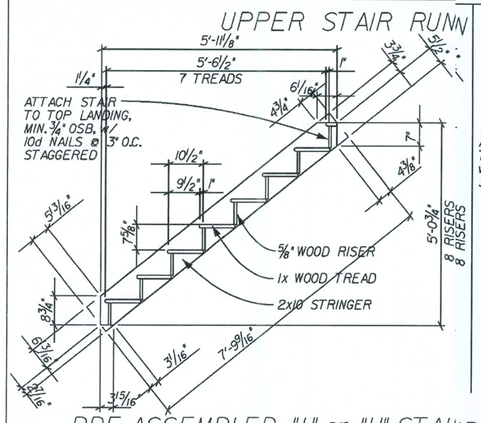

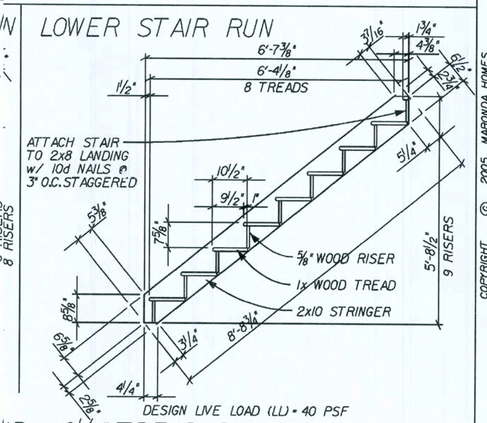

PRE-ASSEMBLED "L" or "U" STAIR : 9 1/2" TREAD [16" FRM'G]

REVISED 08-24-06 NAILING ATTACHMENT

SCALE: 3/8" = 1'-0"

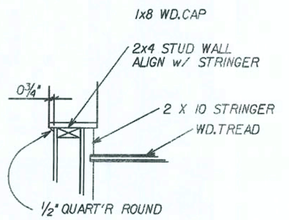

SECTION B

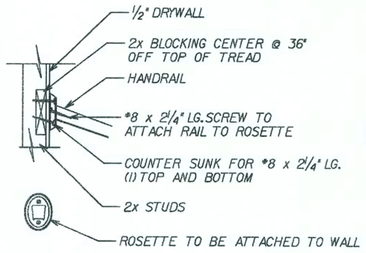

RAIL ATTACHMENT TO WALL

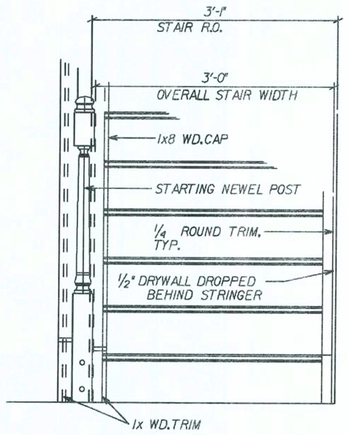

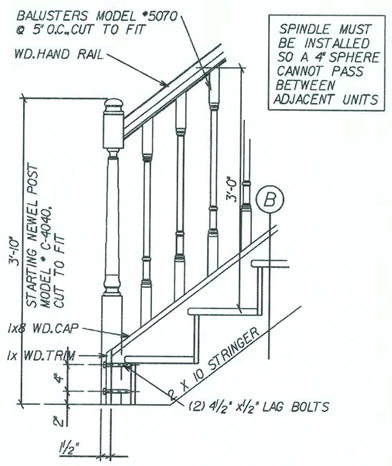

OPTIONAL OPEN RAIL STAIR DETAILS

REVISED 01-25-05

SCALE: 3/4" = 1'-0"

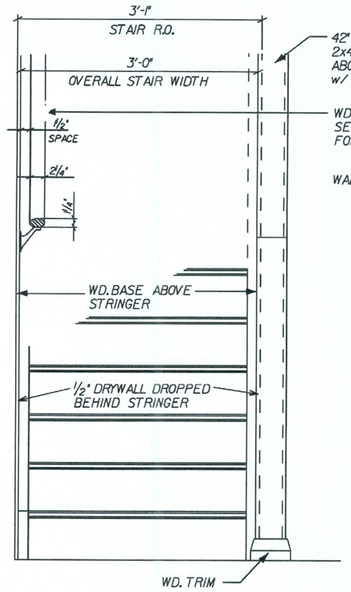

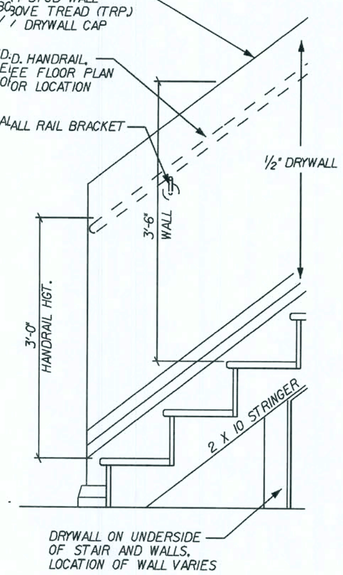

NOTE:
SECTION R311.5.6.2 HANDRAIL ENDS SHALL BE RETURNED TO WALL

REVISED 11-12-07
ADDED WOOD BASE ABOVE STRINGER

STANDARD STAIR w/ 42" HIGH WALL

SCALE: 3/4" = 1'-0"

REVISIONS :

Maronda Homes
(407) 321-0064 4005 MARONDA WAY SANFORD, FLORIDA

FLORIDA
THIS STRUCTURE WAS DESIGNED IN ACCORDANCE WITH THE REQUIREMENTS OF THE FLORIDA BUILDING CODE 2004 : RESIDENTIAL AND 2005, 2006 SUPPLEMENT

16" FRM'G | 15 RISER : "L" STAIR

STAIR DETAILS

GARAGE:
DRAWN BY:
RELEASE DATE:

13:49:35

Maronda Systems
4005 Maronda Way
Sanford, FL 32771
(407)321-0064

Elmer Bergman, P.E.
License No. 50158

MAR 26 2008

SHEET:
STR

PLOT DATE: 12 DEC 2007

p:\houses_05\westcott\dft\5r-129_251.str

FLORIDA BUILDING CODE 2004 : RESIDENTIAL

PRODUCT APPROVAL INFORMATION SHEET FOR FLORIDA

PROJECT NAME: _____ PERMIT # _____

PROJECT ADDRESS: _____

As required by Florida Statute 553.842 and Florida Administrative Code 9b-72, Please provide the information and product approval number(s) for the building components listed below as applicable to the building construction project for the permit number listed above. You should contact you product supplier if you do not know the product approval number for any of the applicable ted products. Information regarding statewide product approval may be obtained at: www.floridabuilding.org.

Category/Subcategory	Manufacturer	Product Description	Limitation of Use	State #	Design Pressures
A. EXTERIOR DOORS					
1. Swinging	Plastpro Inc.	Fiberglass Doors	Evaluated for use in locations adhering to the Florida Building Code and where pressure requirements as determined by ACSE 7 Minimum Design Loads For Building and Other Structures.	FL 6729.1 FL 6729.5	+50 / -50 +50 / -50
2. Sliding	Simonton/Norandex Florida Extruders	Sliding Glass Doors	5000 72X80 SGD45 Milestone 1000 SG.	FL 5979.1 FL 45.1	+50 / -50 +45 / -45
3. Sectional					
4. Roll up	Wayne Dalton	Garage Doors 130 16' 9100 / 5120 8' Garage Doors 140 16' 9100 / 5120 8'	As indicated in elevation report and installation drawings. Not to be used in HVHZ.	FL 5287.1 FL 5287.3 FL 9174.4 FL 9174.5	+26.9 /-30.8 +25.9 /-28.8 +43.2 /-49.6 +39.2 /-43.7
B. WINDOWS					
1. Single Hung	H-R Windows Darwin Window Co Florida Extruders	300 Fin Single Hung 341 Flange Frame S.H. Milestone 1000 S.H.	40-17 72x74 H-15	FL5089.1 FL 2752.1 FL 42.1	+45 / -45 +55 / -55 +45 / -45
2. Horizontal Slider					
3. Casement					
4. Double hung					
5. Fixed	H-R Windows Darwin Window Co Florida Extruders	300Fin Frame Fixed34. Flange Frame Fixed Milestone 1000 Fixed	437.438 111X63 F-C) 3/16 Tempered ass Flange & Fin	FL 1291.2 FL 2349.1 FL 44.1	+55 / -55 +70 / -70 +45 / -45
6. Awning					
7. Pass-through					
8. Projected					
9. Mullion	H-R Windows Florida Extruders	Mullions Milestone Tube Mull Fin Or Flange	Evaluated for use in locations adhering to the Florida Building Code and where pressure requirements as determined by ACSE 7 Minimum Design Loads for Building and Other Structures.	FL 5782 FL 3136-R2	+45 / -45
10. Wind breaker					
11. Dual action					
12. Other					
C. PANEL WALL					
1. Siding	Owen Corning	Norandex - Summit Manor Dbl 4.5 Butch Lap Reynolds - Easy Street Dbl 4.5 Dutch Lap	This Evaluation is not for use within the FBC HVZ or on Education Facilities within the State of Florida. Vinyl Siding is limited to Type V construction, as define below. Section 602.5- TYPE CONSTRUCTION Type V construction is the type of construction in which the structural elements, exterior walls and interior walls are of any material permitted by this code. Compliance is valid only if the subject profile trade name is current on the VSI Vinyl Siding Certification Program.	FL 920.3 FL 920.7	+NA / -152 +NA / -152
2. Soffit	Alsco Metal Corp	16" Vented Soffit Quad 4 Aluminum Soffit	For use as soffit only. Not for use in HVHZ	FL 4459.1	46.71 PSF

Category/Subcategory	Manufacturer	Product Description	Limitation of Use	State #	Design Pressures
D. ROOFING PRODUCTS					
1. Asphalt shingles	Owens Corning	Asphalt Shingle Ridge Vents	This Approval is not for use in the HVHZ. All FBC sections that apply to counties except Broward and Miami-Dade must be followed	FL 3663 FL 234	
2. Underlayments					
3. Roofing fasteners					
4. Nonstructural metal roof					
5. Built-up roofing					
6. Modified bitumen	Polyglass	Two layer torch down	The max design pressure for the selected assembly shall meet or exceed the Zone 1 design pressure determined in accordance with FBC chapter 16.	FL 1654.8 FL 1654.9	
7. Single ply roofing					
8. Roofing tiles					
9. Roofing insulation					
10. Waterproofing					
11. Wood shingles/shakes					
12. Roofing slate					
13. Liquid applied roofing					
14. Cement-adhesive coats					
15. roof tile adhesive					
16. Spray applied polyurethane roof					
17. roof vents	Owens Corning Stamco Inc. Lamanco	Galvanized metal roof vents	This Approval is not for use in the HVHZ. All FBC sections that apply to counties except Broward and Miami-Dade must be followed.	FL 5289.1 FL 8103.1 FL 3792.5	
E. SHUTTERS					
1. Storm Panels	Atrium Shutters, Inc. K&D Manufacturing All American Shutters, Inc.	5L Panel Galv. Stl Storm	This product may only be installed on concrete, hollow concrete block or wood substrates. This product is NOT suitable for installation in the High Velocity Hurricane Zone.	FL 5547.1 FL 2773.1 FL 393.1	50 PSF +47 / -50
F. STRUCTURAL COMPONENTS					
1. Wood connector/anchor	United Steel Products	Anchors, Hangers Etc. Structural Components Wood Connectors	Subject to limitation and Installation Instructions specified in NOA 05-0105.05.	FL.R1,565, 569,572, 576,815,816, 817,818,819, 820,821, 822,859, 1247,1777, 2033,2620, 3923,4928, 5631,6223	
2. Truss plates	Mitek Industries Inc	Truss Connectors	No Limitation of Use.	FL 2197 R1	
3. Engineered lumber					
4. Railing					
5. Coolers-freezers					
6. Concrete admixtures					
7. Material					
8. Insulation forms					
9. Plastics					
10. Deck-roof					
11. Wall					
12. Sheds					
G. SKYLIGHTS					
1. Skylight					
2. Other					
H. NEW EXTERIOR ENVELOPE PRODUCTS					
1.					
2.					

In addition to completing the above list of manufacturers, product description and State approval number for the products used on this project, it is the Contractor's or Authorized Agent's responsibility to have a legible copy of each manufacturer's printed instructions, along with the list above, on the job site available to the Inspector.

The products listed below did not demonstrate product approval at time of plan review. I understand that before these products can be inspected, they must be submitted for review for code compliance and approved by the Plans Examiner. This form will be revised to include each new product in the categories listed above and will be highlighted to indicate the new products and required information.

_____

_____

_____

_____

_____

Authorized Project Agent: _____ _____
(Contractor or Design Professional) (Print Name) (Signature)

Company Name: _____

Mailing Address: _____

_____

City: _____ State: _____ Zip Code: _____

Telephone Number: ( ) _____ Fax Number: ( ) _____

Cell Phone Number: ( ) _____ E-mail Address: _____

REVISIONS :
10-29-07 UPDATE LISTS
01-21-08 UPDATE ROLL UP DOORS

Maronda Homes
(407) 321-0064 4005 MARONDA WAY SANFORD, FLORIDA

FLORIDA-
THIS STRUCTURE WAS DESIGNED IN ACCORDANCE AND MEETS THE REQUIREMENTS OF THE FLORIDA BUILDING CODE 2004 : RESIDENTIAL AND2005, 2006 SUPPLEMENT

PRODUCT APPROVAL

GARAGE:

DRAWN BY:

RELEASE DATE:

SHEET:

PLOT DATE: 21 JAN 2008

08:31:13

dwf/prod_approval.dgn

DISTINCTION SERIES

SMC INSWING RESIDENTIAL INSULATED FIBERGLASS DOOR IN WOOD FRAME

GENERAL NOTES

1. THE FOLLOWING PRODUCT HAS BEEN EVALUATED FOR COMPLIANCE WITH THE WIND LOADS SPECIFIED IN SECTION 120 OF THE TEXAS DEPARTMENT OF INSURANCE WINDSTORM RESISTANT CONSTRUCTION GUIDE AND SECTION 103 OF THE TEXAS WINDSTORM INSURANCE ASSOCIATION BUILDING CODE FOR WINDSTORM RESISTANT CONSTRUCTION.
2. WOOD BUCKS BY OTHERS, MUST BE ANCHORED PROPERLY TO TRANSFER LOADS TO THE STRUCTURE.
3. PRODUCT ANCHORS SHALL BE AS LISTED AND SPACED AS SHOWN ON DETAILS. ANCHOR EMBEDMENT TO BASE MATERIAL SHALL BE BEYOND WALL DRESSING OR STUCCO.
4. PRODUCT DOES NOT MEET IMPACT RESISTANCE
5. DESIGN PRESSURE RATING SHALL BE AS FOLLOWS:
   - FOR 8' 8" HIGH DOORS: SEE TABLE 1.
   - FOR FRAMES OVER 6' 8" UP TO 8' 0": SEE TABLE 2.

DISTINCTION SMC FIBERGLASS DOOR

DOOR LEAF CONSTRUCTION:

FACE SHEETS: EACH SLAB IS CONSTRUCTED FROM 0.080" THICK FIBERGLASS SKIN.

CORE DESIGN: THE INTERIOR CAVITY OF EACH DOOR IS FILLED WITH RIGID POLYURETHANE.

CONSTRUCTION: THE VERTICAL EDGES OF THE SLAB CONSIST OF GLUED INTERLOCKING FIBERGLASS JOINTS.THE HORIZONTAL EDGES CONSIST OF THE FIBERGLASS SKIN GLUED TO THE WOOD BLOCK AT TOP AND TO THE RIGID PVC FOAM INSERT AT BOTTOM.

TABLE OF CONTENTS

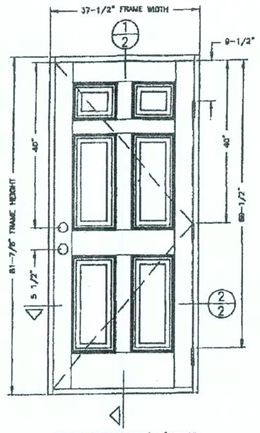

TYPICAL ELEVATION 8'-8" DOOR

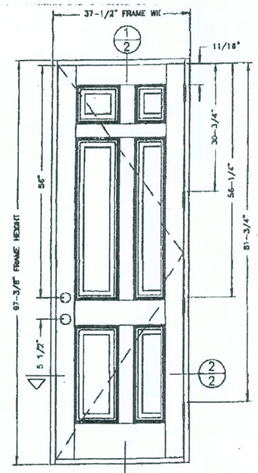

TYPICAL ELEVATION 8'- DOOR

DESIGN PRESSURE RATING (TABLE #1)		
	WHERE WATER INFILTRATION REQUIREMENT IS NEEDED	WHERE WATER INFILTRATION REQUIREMENT IS NOT NEEDED
POSITIVE	NOT APPROVED	+80 PSF
NEGATIVE	NOT APPROVED	-80 PSF

DESIGN PRESSURE RATING (ILE #2)		
	WHERE WATER INFILTRATION REQUIREMENT IS NEEDED	WHERE WATER INFILTRATION REQUIREMENT IS NOT NEEDED
POSITIVE	NOT APPROVED	+80 PSF
NEGATIVE	NOT APPROVED	-85 PSF

PLASTPRO, INC.
9 PEACH TREE HILL RD.
LIVINGSTON, NJ 07039

PRODUCT: DISTINCTION SERIES SMC INSWING FIBERGLASS PATIO DOOR
PART OR ASSEMBLY: GENERAL NOTES AND ELEVATIONS

NO	DATE	REVISIONS	BY

RW CONSULTING (813) 684-3831

DATE: 01/06/99
SCALE: N.T.S.
DWG. BY: R.P.P.
CHK. BY:
DRAWING NO.: 99-01
SHEET 1 OF 4

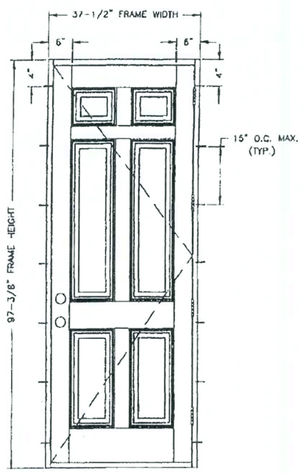

ANCHOR LAYOUT FOR 8'-0" DOOR

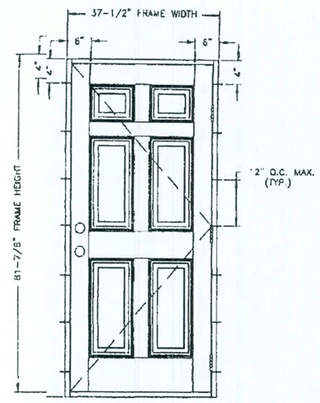

ANCHOR LAYOUT FOR 6'-8" DOOR

TYPICAL ANCHORS
1.) INTO 2BY WOOD BUCKS OR WOOD STRUCTURE
#8 PFH Wd. Screw, 1" MIN. EMBEDMENT
2.) INTO 1BY WOOD BUCKS OR INTO MASONRY
3/16" DIA. TAPCONS WITH 1-1/4" MIN. EMBEDMENT

PLASTPRO, INC.
9 PEACH TREE HILL RD.
LIVINGSTON, NJ 07039

PRODUCT: DISTINCTION SERIES SMC INSWING FIBERGLASS PATIO DOOR
PART OR ASSEMBLY: ANCHORING LAYOUT

NO	DATE	REVISIONS	BY

RW CONSULTING (813) 684-3831

DATE: 01/06/99
SCALE: N.T.S.
DWG. BY: R.P.P.
CHK. BY:
DRAWING NO.: 99-01
SHEET 3 OF 4

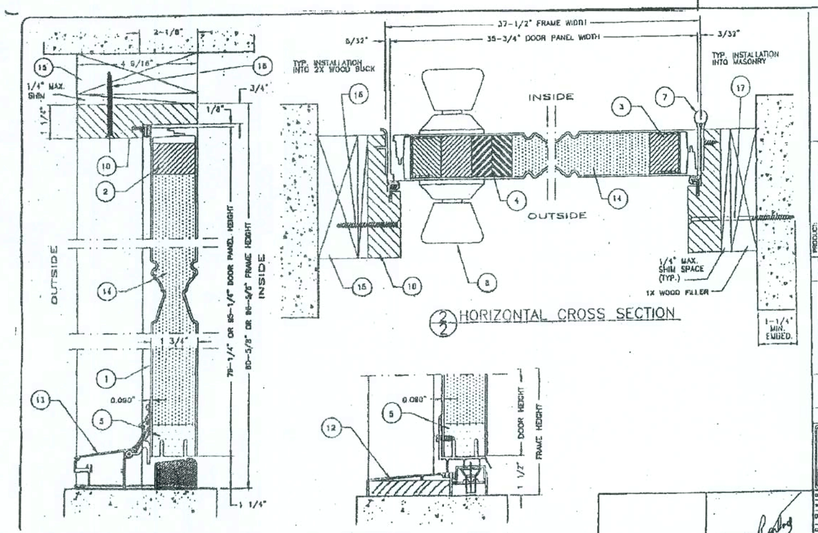

1/2 VERTICAL CROSS SECTION

1/2 HORIZONTAL CROSS SECTION

1/2 OPTIONAL THRESHOLD

PLASTPRO, INC.
LIVINGSTON, NJ 07039

PRODUCT: DISTINCTION SERIES SMC INSWING FIBERGLASS PATIO DOOR
VERTICAL & HORIZONTAL

NO	DATE	REVISIONS	BY

RW CONSULTING (813) 684-3831

DATE: 01/99
SCALE: N.T.S.
DWG. BY: R.P.P.
CHK. BY:
DRAWING NO.: 101
SHEET 2 OF 4

NOTE:
WHEN REQ.THE USE OF 2X SHALL BE ALLOWED USING (4) EVENLY SPACED 1/4" X 3" TAPCONS IN THE SIDES, AND (2) EVENLY SPACED 1/4" X 3" TAPCONS IN THE HEADER ALL W/ 1 1/4" IMBEDMENT. IF NEEDED A 1X CAN BE NAILED 6" O.C. STAGGERED TO 2X. DOOR IS THEN ATTACHED PER DETAILS ON THIS PAGE.

FINAL ANCHORING OF A WOOD FRAME UP TO : 5'4 X 6'8
SINGLE INSWING UNIT W/WO SIDELITES
PRODUCT ACCEPTANCE No.: DSI222

SCREW SCHEDULE		
1	#10 X 5/8"	PHILLIPS FL FLAT HEAD
2	#10 X 1 3/4"	PHILLIPS FL FLAT HEAD
3	#10 X 2"	PHILLIPS FL FLAT HEAD
4	#10 X 3"	PHILLIPS FL FLAT HEAD

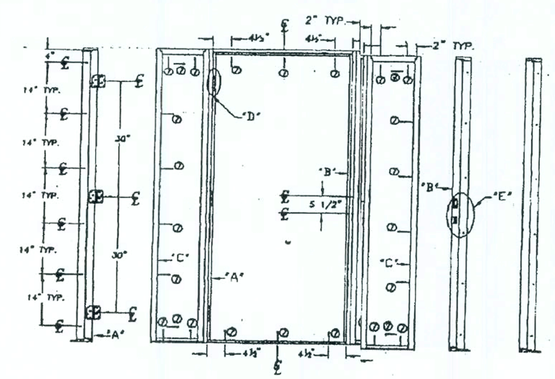

Product Acceptance No: DSI-222

Size: up to 5'4 x 6'8 — Inswing (wood jamb) — Configuration: X, OXO, XO, OX

	2'0	2'4	2'6	2'6	2'8	3'0
Single Opaque W/Sidelites	+80 -80	+80 -80	+80 -80		+80 -80	+80 -80
Single Glazed W/Sidelites	+75 -80	+64 -77	+60 -71		+60 -60 / +56 -67 / +50 -60	+60 -60 / +50 -60 / +50 -60

(Door does not meet Missile Impact)
Test # 210-1987, 210-2024
Mfg. by: Nan Ya Plastics / I/ Plastpro Livingston, NJ 07039

ITEM	DESCRIPTION	PART No.	MATERIAL
1	DOOR SKIN (8 PANEL 8'-8")	SKS 87	SMC GRP THK FIBERGLASS
	DOOR SKIN (6 PANEL 6'-8")	SKS 81	SMC GRP THK FIBERGLASS
2	TOP RAIL (6'-8")	WCA 20	WOOD (MAHOGANY)
	TOP RAIL (8'-8")	WCA 30	WOOD (MAHOGANY)
3	HINGE STILE	WCA 30	WOOD (MAHOGANY)
		RIT 422	STEEL (SS 41)
4	LOCK STILE	WCA 30 (TWO PCS.)	WOOD (MAHOGANY)
		RIJ 422	STEEL (SS 41)
		WCA 20 (TWO PCS.)	WOOD (MAHOGANY)
5	BOTTOM RAIL	PAS 71	FOAM PVC EXTRUSION
		MAS 01	PVC
		DK 250 (ENDUBUL)	PVC CO-EXTRUSION
6	DOOR BOTTOM (INSWING)	BENCHMARK ADJ.	PVC CO-EXTRUSION
		DOOR SWEEP	
		DOOR SWEEP	ALUMINUM / PVC
7	BUTT HINGE	4" X 4"	BRASS
8	LATCH LOCK	KWIKSET 200 SERIES	
9	DEAD BOLT	KWIKSET 660 SERIES	
10	DOOR FRAME	1-3/16" WOOD FRAME	FINGER JOINTED MAPLE PINE
		DOR 650 WEATHERSTRIP	SCHLEGEL 9-100
		6 LB DOORWAY	ALUMINUM / WOOD
12	THRESHOLD (INSWING)	DOR 800 WEATHERSTRIP	SCHLEGEL 9-100
		DOOR THRESHOLD	ALUMINUM / WOOD
13	THRESHOLD (INSWING)	DOR 800	SCHLEGEL 9-100
		DOR 800	ALUMINUM / PVC
14	FOAM CORE		POLYURETHANE FOAM CORE
15	PVC		WOOD BLOCK
16	ANCHOR	#8X2-1/2" PFH Wd. Screw	STEEL
17	ANCHOR	3/16" X 1H TAPCON	STEEL

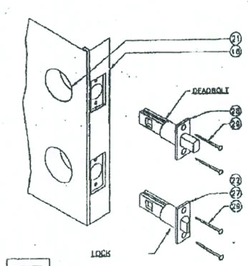

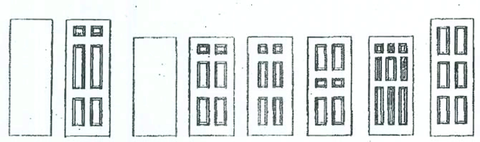

DOOR MODELS

PLASTPRO, INC.
LIVINGSTON, NJ 07039

PRODUCT: DISTINCTION SERIES SMC INSWING FIBERGLASS PATIO DOOR
PARTS LIST

NO	DATE	REVISIONS	BY

RW CONSULTING (813) 684-3831

DATE: 01/99
SCALE: N.T.S.
DWG. BY: R.P.P.
CHK. BY:
DRAWING NO.: 101
SHEET 4 OF 4

REVISIONS :

Maronda Homes

4005 MARONDA WAY SANFORD, FLORIDA
(407) 321-0064

EXT. DOOR DETAILS

IN SWING-FIBERGLASS

RELEASE DATE:

SHEET:
FD1

05 JUN 2003 0502533 p:\fdc2000\fine blocks\v8u2\hpgraphics\fdc

DISTINCTION SERIES

SMC OUTSWING RESIDENTIAL INSULATED FIBERGLASS DOOR IN WOOD FRAME

GENERAL NOTES

1. THIS PRODUCT IS DESIGNED TO MEET THE SOUTH FLORIDA BUILDING CODE 1994 EDITION FOR MIAMI-DADE COUNTY.
2. WOOD BUCKS BY OTHERS, MUST BE ANCHORED PROPERLY TO TRANSFER LOADS TO THE STRUCTURE.
3. PRODUCT ANCHORS SHALL BE AS LISTED AND SPACED AS SHOWN ON DETAILS. ANCHOR EMBEDMENT TO BASE MATERIAL SHALL BE BEYOND WALL DRESSING OR STUCCO.
4. IMPACT RESISTANT SHUTTERS NOT REQUIRED
5. DESIGN PRESSURE RATING SHALL BE AS FOLLOWS:
   - FOR 6' 8" HIGH DOORS: SEE TABLE 1.
   - FOR FRAMES OVER 6' 8" UP TO 8' 0": SEE TABLE 2.

DISTINCTION SMC FIBERGLASS DOOR

DOOR LEAF CONSTRUCTION:

FACE SHEETS: EACH SLAB IS CONSTRUCTED FROM 0.090" THICK FIBERGLASS SKIN.

CORE DESIGN: THE INTERIOR CAVITY OF EACH DOOR IS FILLED WITH RIGID POLYURETHANE.

CONSTRUCTION: THE VERTICAL EDGES OF THE SLAB CONSIST OF GLUED INTERLOCKING FIBERGLASS JOINTS.THE HORIZONTAL EDGES CONSIST OF THE FIBERGLASS SKIN GLUED TO THE WOOD BLOCK AT TOP AND TO THE RIGID PVC FOAM INSERT AT BOTTOM.

TABLE OF CONTENTS

SHEET #	DESCRIPTION
1	GENERAL NOTES, TYPICAL ELEVATIONS
2	CROSS SECTIONS (VERTICAL AND HORIZONTAL)
3	ANCHORING LAYOUT
4	PART LIST

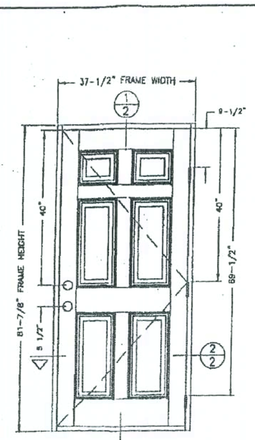

TYPICAL ELEVATION 6'-8" DOOR

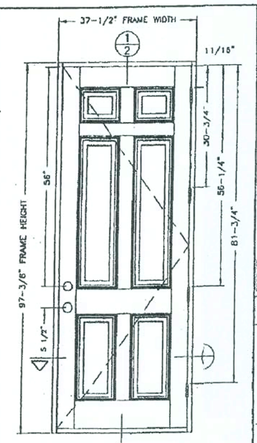

TYPICAL ELEVATION 8'-0" DOOR

DESIGN PRESSURE RATING (TABLE #1)

	WHERE WATER INFILTRATION REQUIREMENT IS NEEDED	WHERE WATER INFILTRATION REQUIREMENT IS NOT NEEDED
POSITIVE	+60 PSF	+80 PSF
NEGATIVE	-60 PSF	-80 PSF

DESIGN PRESSURE RATING (TABLE #2)

	WHERE WATER INFILTRATION REQUIREMENT IS NEEDED	WHERE WATER INFILTRATION REQUIREMENT IS NOT NEEDED
POSITIVE	+50 PSF	+50 PSF
NEGATIVE	-55 PSF	-55 PSF

PLASTPRO, INC
9 PEACH TREE HILL RD.
LIVINGSTON, NJ 07039

PRODUCT: DISTINCTION SERIES SMC OUTSWING FIBERGLASS DOOR
PART OR ASSEMBLY: GENERAL NOTES AND ELEVATIONS

NO.	DATE	REVISIONS	BY

RW CONSULTING (813) 684-3831

DATE: 01/06/99
SCALE: N.T.S.
DWG. BY: R.P.P.
CHK. BY:
DRAWING NO.: 99-02
SHEET 1 OF 4

DISTINCTION SERIES

SMC OUTSWING RESIDENTIAL INSULATED FIBERGLASS DOOR IN WOOD FRAME (STEEL REINFORCED WITH FULL GLASS LITE)

GENERAL NOTES

1. THIS PRODUCT IS DESIGNED TO MEET THE SOUTH FLORIDA BUILDING CODE 1994 EDITION FOR MIAMI-DADE COUNTY.
2. WOOD BUCKS BY OTHERS, MUST BE ANCHORED PROPERLY TO TRANSFER LOADS TO THE STRUCTURE.
3. PRODUCT ANCHORS SHALL BE AS LISTED AND SPACED AS SHOWN ON DETAILS. ANCHOR EMBEDMENT TO BASE MATERIAL SHALL BE BEYOND WALL DRESSING OR STUCCO.
4. IMPACT RESISTANT SHUTTERS ARE REQUIRED
5. DESIGN PRESSURE RATING SHALL BE AS FOLLOWS:
   - FOR 6' 8" HIGH DOORS: SEE TABLE 1.
   - FOR FRAMES OVER 6' 8" UP TO 8' 0": SEE TABLE 2.

DOOR LEAF CONSTRUCTION:

1. FACE SHEETS: EACH SLAB IS CONSTRUCTED FROM 0.075 THK. FIBERGLASS SKIN.
2. CORE DESIGN: THE INTERIOR CAVITY OF EACH DOOR IS FILLED WITH RIGID POLYURETHANE.
3. CONSTRUCTION: THE VERTICAL EDGES OF THE SLAB CONSIST OF GLUED INTERLOCKING FIBERGLASS JOINTS THE HORIZONTAL EDGES CONSIST OF THE FIBERGLASS SKIN, GLUED TO THE WOOD BUCK AT TOP AND TO THE RIGID PVC FOAM INSERT AT BOTTOM
4. GLAZING: 5/8" OVERALL THICKNESS INSULATED GLASS PANEL CONSISTING OF: TWO 1/8" TEMPERED LITES AND ONE AIR SPACE.
5. REINFORCING: ONE (1) "U" SHAPED STEEL REINFORCING CHANNEL MEASURING 1.591"x0.748"x0.079" THK. WAS LOCATED AT EACH PANEL STILE. (8'-0" DOOR ONLY)

TABLE OF CONTENTS

SHEET #	DESCRIPTION
1	GENERAL NOTES, TYPICAL ELEVATIONS
2	CROSS SECTIONS (VERTICAL AND HORIZONTAL)
3	ANCHORING LAYOUT
4	PART LIST

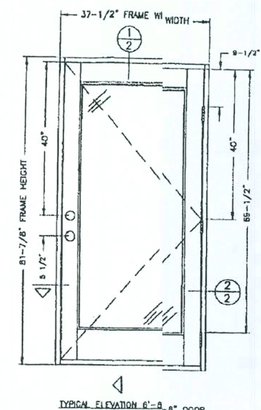

TYPICAL ELEVATION 6'-8"-8" DOOR

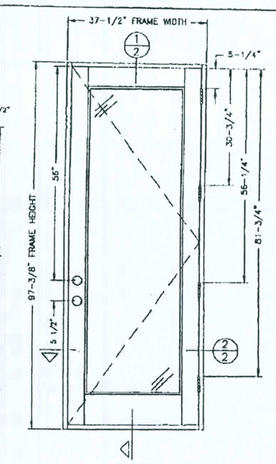

TYPICAL ELEVATION 8'-0" DOOR

DESIGN PRESSURE RATING (TABLE #1)

	WHERE WATER INFILTRATION REQUIREMENT IS NEEDED	WHERE WATER INFILTRATION REQUIREMENT IS NOT NEEDED
POSITIVE	+60 PSF	+80 PSF
NEGATIVE	-60 PSF	-80 PSF

DESIGN PRESSURE RATING (TABLE #2)

	WHERE WATER INFILTRATION REQUIREMENT IS NEEDED	WHERE WATER INFILTRATION REQUIREMENT IS NOT NEEDED
POSITIVE	+60 PSF	+70 PSF
NEGATIVE	-70 PSF	-70 PSF

PLASTPRO, INC
9 PEACH TREE HILL RD.
LIVINGSTON, NJ 07039

PRODUCT: DISTINCTION SERIES SMC OUTSWING FIBERGLASS GLAZED PANEL DOOR
PART OR ASSEMBLY: GENERAL NOTES AND ELEVATIONS

NO.	DATE	REVISIONS	BY

RW CONSULTING (813) 684-3831

DATE: 02/09/99
SCALE: 3/4"=12"
DWG. BY: R.P.P.
CHK. BY:
DRAWING NO.: 99-05
SHEET 1 OF 4

REVISIONS :

Maronda Homes

4005 MARONDA WAY SANFORD, FLORIDA (407) 321-0064

EXT. DOOR DETAILS

OUT SWING-FIBERGLASS

RELEASE DATE:

SHEET: FD 2

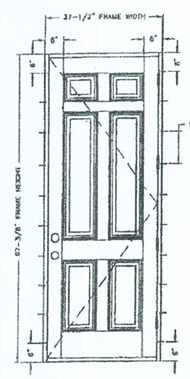

ANCHOR LAYOUT FOR 6'-8" DOOR

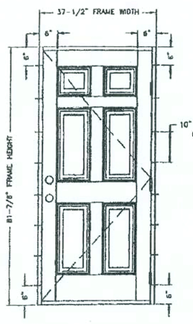

ANCHOR LAYOUT FOR 6'-8" DOOR

TYPICAL ANCHORS

1.) INTO 2BY WOOD BLOCKS OR WOOD STRUCTURE (8 SMS, 1-1/2" MIN. EMBEDMENT
2.) INTO 1BY WOOD BUCKS OR INTO MASONRY 3/16" DIA. TAPCONS WITH 1-1/4" MIN. EMBEDMENT

PLASTPRO, INC
9 PEACH TREE HILL RD.
LIVINGSTON, NJ 07039

PRODUCT: DISTINCTION SERIES SMC OUTSWING FIBERGLASS DOOR
PART OR ASSEMBLY: ANCHORING LAYOUT

RW CONSULTING (813) 684-3831

DATE: 02/09/99
SCALE: N.T.S.
DWG. BY: R.P.P.
CHK. BY:
DRAWING NO.: 99-02
SHEET 3 OF 4

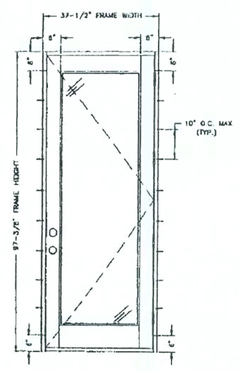

ANCHOR LAYOUT FOR 8'-0" DOOR

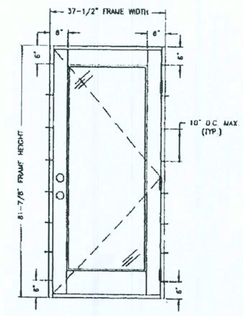

ANCHOR LAYOUT FOR 6'-8" DOOR

TYPICAL ANCHORS

1.) INTO 2BY WOOD BLOCKS OR WOOD STRUCTURE (8 SMS, 1-1/2" MIN. EMBEDMENT
2.) THRU 1BY WOOD BUCKS AND INTO MASONRY 3/16" DIA. TAPCONS WITH 1-1/4" MIN. EMBEDMENT

PLASTPRO, INC
9 PEACH TREE HILL RD.
LIVINGSTON, NJ 07039

PRODUCT: DISTINCTION SERIES SMC OUTSWING FIBERGLASS GLAZED PANEL DOOR
PART OR ASSEMBLY: ANCHORING LAYOUT

RW CONSULTING (813) 684-3831

DATE: 02/09/99
SCALE: N.T.S.
DWG. BY: R.P.P.
CHK. BY:
DRAWING NO.: 99-05
SHEET 3 OF 4

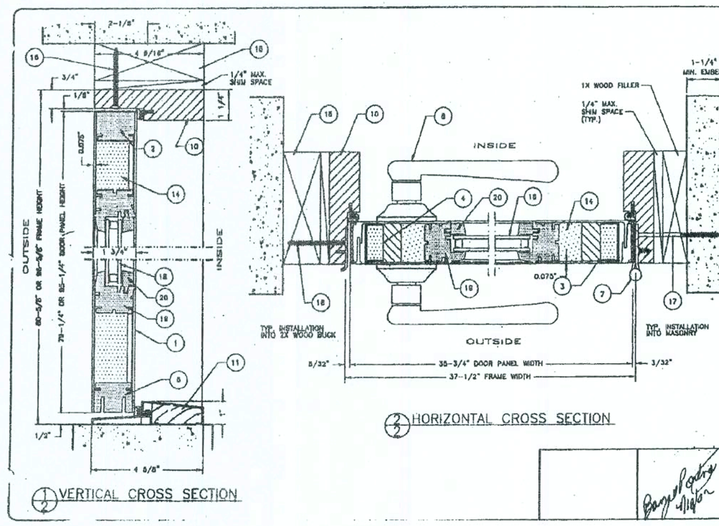

1/2 VERTICAL CROSS SECTION

3/2 HORIZONTAL CROSS SECTION

PLASTPRO, INC
9 PEACH TREE HILL RD.
LIVINGSTON, NJ 07039

PRODUCT: DISTINCTION SERIES SMC OUTSWING FIBERGLASS DOOR
PART OR ASSEMBLY: VERTICAL & HORIZONTAL CROSS SECTIONS

RW CONSULTING (813) 684-3831

DATE: 02/09/99
SCALE: N.T.S.
DWG. BY: R.P.P.
CHK. BY:
DRAWING NO.: 99-03
SHEET 2 OF 4

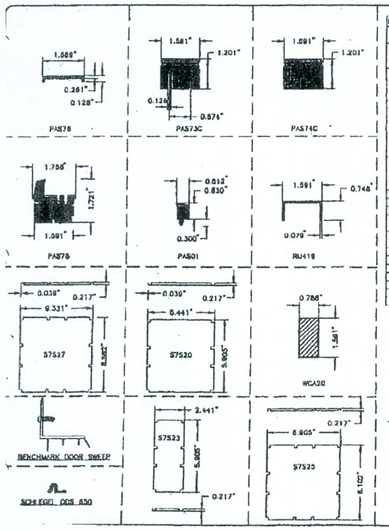

ITEM	DESCRIPTION	PART No.	MATERIAL
1	DOOR SKIN (6 PANEL 6'-8")	=====	SMC .075" THK FIBERGLASS
	DOOR SKIN (8 PANEL 8'-0")	=====	SMC .075" THK FIBERGLASS
2	TOP RAIL	PAS76C TOP RAIL	PVC FOAM
		S7523 ANCHOR (6'-8")	STEEL
		S7520 ANCHOR (8'-0")	STEEL
3	HINGE STILE	PAS78 DOOR EXTENSION	RIGID PVC
		WCA30(TWO PCS)(8'-0" ONLY)	WOOD (MAHOGANY)
		WCA20 (6'-0" ONLY)	WOOD (MAHOGANY)
		RU 418 (8'-0" ONLY)	STEEL (SS 41)
4	LOCK STILE	PAS78 DOOR EXTENSION	RIGID PVC
		WCA30(TWO PCS)(8'-0" ONLY)	WOOD (MAHOGANY)
		WCA20 (6'-0" ONLY)	WOOD (MAHOGANY)
		RU 418 (8'-0" ONLY)	STEEL (SS 41)
		S7525 ANCHOR (8'-0")	STEEL
		S7527 ANCHOR (6'-0")	STEEL
5	BOTTOM RAIL	PAS76 BOTTOM RAIL	PVC FOAM
		DP 834 (FOUNDRY)	PVC CO-EXTRUSION
6	DOOR BOTTOM (INSWING)	BENCHMARK ADJ. DOOR SWEEP	PVC CO-EXTRUSION
		DOOR SWEEP	ALUMINUM / PVC
7	BUTT HINGE	4" X 4"	BRASS
8	LATCH LOCK	KWIKSET 200 SERIES	
9	DEAD BOLT	KWIKSET 660 SERIES	
10	DOOR FRAME	4-9/16" WOOD FRAME	WOOD
		DDS 650 WEATHERSTRIP	SCHLEGEL Q-LON
11	THRESHOLD (OUTSWING)	OUTSWING BUMPER	ALUMINUM / WOOD
		DDS 650 WEATHERSTRIP	SCHLEGEL Q-LON
12	FOAM CORE		POLYURETHANE FOAM CORE
13	2X		WOOD BLOCK
14	ANCHOR	#8 X 2-1/2" PAN SMS	STEEL
15	ANCHOR	3/16" X	FH TAPCON
16	5/8" INSULATED GLASS, CONSISTING OF: (2) LITES OF 1/4" TEMP. GLASS + AIR SPACE		
17	INTERNAL FRAME	PAS74	PVC FOAM
18	GLAZING BEAD	PAS81	PVC FOAM

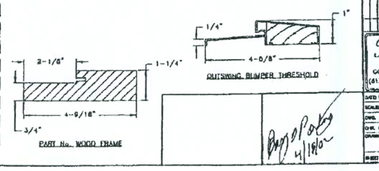

PART No. WOOD FRAME

OUTSWING BUMPER THRESHOLD

PLASTPRO, INC
9 PEACH TREE HILL RD.
LIVINGSTON, NJ 07039

PRODUCT: DISTINCTION SERIES SMC OUTSWING FIBERGLASS DOOR
PART OR ASSEMBLY: PARTS LIST

RW CONSULTING (813) 684-3831

DATE: 02/09/99
SCALE: N.T.S.
DWG. BY: R.P.P.
CHK. BY:
DRAWING NO.: 99-06
SHEET 4 OF 4

ITEM	DESCRIPTION	PART No.	MATERIAL
	DOOR		
	DOOR SKIN (6 PANEL 6'-8")	SMC 92	SMC .090" THK FIBERGLASS
	DOOR SKIN (8 PANEL 8'-0")	SMC 94	SMC .090" THK FIBERGLASS
2	TOP RAIL	WCA 20	WOOD (MAHOGANY)
	TOP RAIL (6'-8")	WCA 30	WOOD (MAHOGANY)
	TOP RAIL (8'-0")	WCA 30	WOOD (MAHOGANY)
3	HINGE STILE	WCA 20	WOOD (MAHOGANY)
		RU 422	STEEL (SS 41)
4	LOCK STILE	WCA 30(TWO PCS)	WOOD (MAHOGANY)
		RU 422	STEEL (SS 41)
5	BOTTOM RAIL	WCA 20(TWO PCS)	WOOD (MAHOGANY)
		PAS 73	FOAM PVC EXTRUSION
7	BUTT HINGE	MS5 01	PVC
8	LATCH LOCK	4" X 4"	BRASS
9	DEAD BOLT	KWIKSET 200 SERIES	
		KWIKSET 660 SERIES	
10	DOOR FRAME	4-9/16" WOOD FRAME	WOOD
		DDS 650 WEATHERSTRIP	SCHLEGEL Q-LON
11	THRESHOLD (OUTSWING)	OUTSWING BUMPER	ALUMINUM / WOOD
		DDS 650 WEATHERSTRIP	SCHLEGEL Q-LON
12	FOAM CORE		POLYURETHANE FOAM CORE
13	2X		WOOD BLOCK
14	ANCHOR	#8 X 2-1/2" PAN SMS	STEEL
15	ANCHOR	3/16" X	FH TAPCON

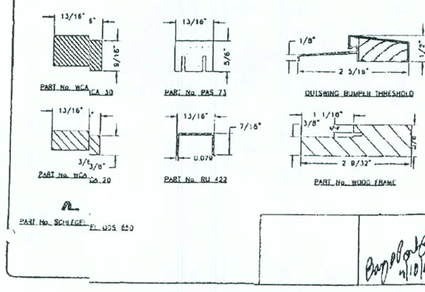

PART No. SCHEGEL DDS 650

PLASTPRO, INC
9 PEACH TREE HILL RD.
LIVINGSTON, NJ 07039

PRODUCT: DISTINCTION SERIES SMC OUTSWING FIBERGLASS DOOR
PART OR ASSEMBLY: PARTS LIST

RW CONSULTING (813) 684-3831

DATE: 01/06/99
SCALE: N.T.S.
DWG. BY: R.P.P.
CHK. BY:
DRAWING NO.: 99-03
SHEET 4 OF 4

02 JUN 2003 09:03:55 d:\bc200\white blocks\fd2-general.dgn

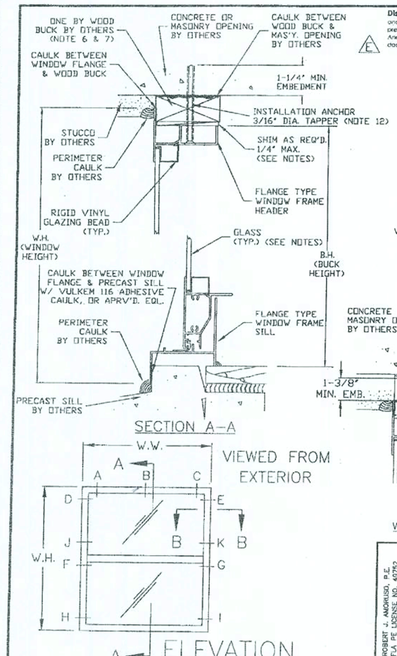

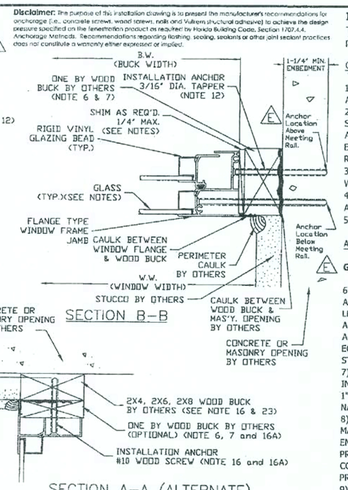

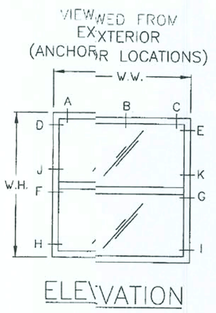

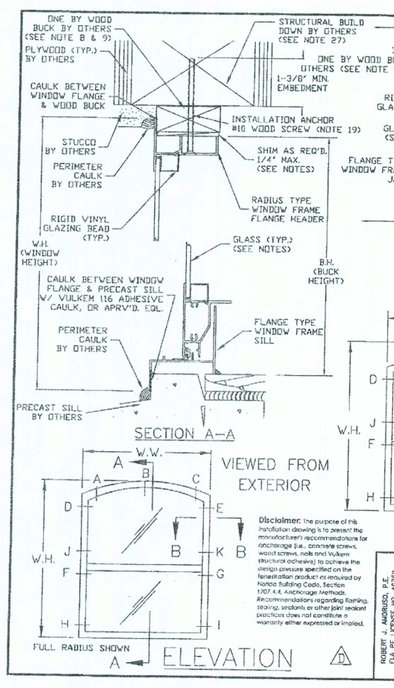

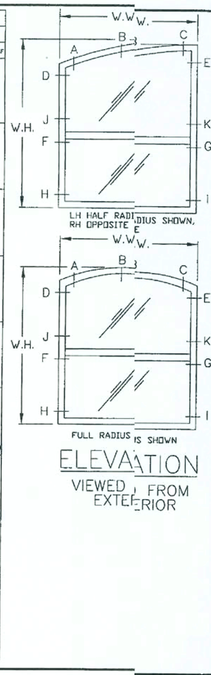

Disclaimer: The purpose of this installation drawing is to present the manufacturer's recommendations for anchorage (i.e., concrete screws, wood screws, nails and Vulkem structural adhesive) to achieve the design pressure specified on the fenestration product as required by Florida Building Code, Section 1707.4.4. Anchorage Methods. Recommendations regarding flashing, sealing, sealants or other joint sealant practices does not constitute a warranty either expressed or implied.

ROBERT J. AMOROSO, P.E.
FLA. PE LICENSE NO. 49752
JUL 2 9 2004

IMPORTIT INFORMATION & GENERAL NOTES

These notere provided to ensure proper installation of Florida Extruders Milestone products amust be followed fully.

GENERAL IfALLATION INSTRUCTIONS

1) SHIM ASQ'D. AT EACH INSTALLATION ANCHOR WITH LOAD BEARING SHIM. MAX. ALLOWABLHIM STACK TO BE 1/4".
2) USE SILINIZED ACRYLIC CAULK BEHIND WINDOW FLANGE AT HEAD & JAMBS. SILL MUST ATTACHED TO THE SUBSTRATE WITH VULKEM 116 ADHESIVE CAULK OR APPROVED JAL. APPLICATION OF VULKEM 116 ADHESIVE CAULK OR APPROVED EQUAL AT FME SILL MUST COMPLY WITH SEALANT MANUFACTURER'S RECOMMENTIONS.
3) USE SILINIZED ACRYLIC CAULK FOR PERIMETER SEAL AROUND EXTERIOR OF WINDOW FIGE AND TO SEAL HEADS OF INSTALLATION FASTENERS.
4) FLORIDATRUDERS 1000 SERIES SINGLE HUNG IS SHOWN. THIS PRINT ALSO APPLIES TOIE FLORIDA EXTRUDERS 1500 AND 2000 SERIES SINGLE HUNGS.
5) WINDOWAME MATERIAL: ALUMINUM ALLOY 6063.

ANCHOR INILLATION INSTRUCTIONS

GENERAL:

6) NAIL ATTHMENT OF NON-STRUCTURAL ONE BY BUCK IS 4" FROM EACH CORNER AND 8" ON ITER. USE A HARDENED "T-NAIL" WITH A 0.097" DIAMETER AND 1 3/8" LENGTH (5/EMBEDMENT), A HARDENED "MASONRY NAIL" WITH A 0.148" DIAMETER AND 1 1/2" IGTH (3/4" EMBEDMENT) OR EQUIVALENT. FOR ALTERNATE SECTION A-A/B-B, USI 0.113" DIAMETER COMMON WIRE NAIL WITH A 3/4" EMBEDMENT OR EQUIVALENDR NAILING NON-STRUCTURAL ONE BY BUCK INTO A TWO BY STRUCTURAUCK.
7) APPLIES TALL NON-STRUCTURAL BUCKS LESS THAN 1 1/2" THICKNESS. NOT INTENDED T.IMIT TO NOMINAL ONE BY WOOD BUCK ONLY. BUCKS GREATER THAN 1" NOMIMAL'4" THICK) AND LESS THAN 2" NOMINAL (1 1/2" THICK) WILL REQUIRE NAIL LENGTUFFICIENT TO MEET EMBEDMENT REQUIREMENTS OF NOTE 6.
8) ALL INSTATION ANCHORS MUST BE MADE OF CORROSION RESISTANT MATERIALS (HAVE A CORROSION RESISTANT COATING APPLIED SUITABLE FOR THE ENVIRONMEIAND/OR FRAMING MATERIAL. WHERE ANCHORS ARE USED IN PRESSURE-PIERVATIVE TREATED WOOD, THE WOOD SUPPLIER SHALL BE CONSULTED R RECOMMENDATION OF ANCHORS COMPATIBLE WITH THE PRESSURE-PIERVATIVE TREATMENT PROCESS USED.
9) ALL FIELDIPPLIED HOLES IN THE FRAME (IF REQUIRED) WILL BE 3/16" IN DIAMETER.
10) WOOD SCWS SHALL MEET ANSI B18.6.1 DIMENSIONAL REQUIREMENTS.
11) IF WOOIENDS TO SPLIT, PRE-BORE HOLES AS FOLLOWS: #8 WOOD SCREW - 1/8" DIA. PIL HOLE & #10 WOOD SCREW - 9/64" DIA. PILOT HOLE (NATIONAL DESIGN SPECCATION FOR WOOD CONSTRUCTION).

[SEE SHEET 2 FOR CONTINUATION OF NOTES]

REV	DESCRIPTION	DATE	INI
D	REVISED ANCHOR LOCATION IN JAMB OF SIZE 37. NO CHANGE IN QUANTITY.	4/23/04	RJA
E	ADDED DISCLAIMER AND CLARIFIED LOCATION OF JAMB ANCHORS.	7/29/04	RJA

FORIDA EXTRUDERS INTERNATIONAL, INC.
2540 JEWETT LANE
SANFORD, FLORIDA
CEICATE OF AUTHORIZATION NO. 9235
TIT: INSTALLATION DETAIL
SC HUNG FLANGE WINDOWS - SERIES 1000, 1500 & 2000
DRN BY: BB
APPROVED BY: RJA
DA 7/29/04
SCALE: NTS
DWG.: FLEX0016, SHT 1 OF 2

TAPPER LOCATION CHART					
CALL SIZE	BUCK SIZE	LOCATIONS IN HEAD		LOCATIONS IN JAMB	
		30PSF TO 40PSF	41PSF TO 70PSF	30PSF TO 40PSF	41PSF TO 70PSF
12	18 1/8 X 25	B	B	F,G	F,G
13	18 1/8 X 37 3/8	B	B	F,G	F,G
14	18 1/8 X 49 5/8	B	B	F,G	F,G
145	18 1/8 X 55 1/4	B	B	F,G	F,G
15	18 1/8 X 62	B	B	F,G	F,G
16	18 1/8 X 71	B	B	F,G	F,G,H,I
17	18 1/8 X 83	B	B	F,G	F,G,J,K
1H2	25 1/2 X 25	B	B	F,G	F,G
1H3	25 1/2 X 37 3/8	B	B	F,G	F,G
1H4	25 1/2 X 49 5/8	B	B	F,G	F,G,H,I
1H45	25 1/2 X 55 1/4	B	B	F,G	F,G,H,I
1H5	25 1/2 X 62	B	B	F,G	F,G,H,I
1H6	25 1/2 X 71	B	B	F,G	F,G,H,I
1H7	25 1/2 X 83	B	B	F,G,J,K	F,G,J,K
30 1/2 X 26	29 1/2 X 25	B	B	F,G	F,G
30 1/2 X 38 3/8	29 1/2 X 37 3/8	B	B	F,G	F,G
30 1/2 X 50 5/8	29 1/2 X 49 5/8	B	B	F,G	F,G,H,I
30 1/2 X 56 1/4	29 1/2 X 55 1/4	B	B	F,G	F,G,H,I
30 1/2 X 63	29 1/2 X 62	B	B	F,G	F,G,H,I
30 1/2 X 72	29 1/2 X 71	B	B	F,G,H,I	F,G,H,I
30 1/2 X 84	29 1/2 X 83	B	B	F,G,J,K	F,G,J,K
22	36 x 25	B	B	F,G	F,G
23	36 x 37 3/8	B	B	F,G	F,G
24	36 x 49 5/8	B	B	F,G	F,G,H,I
245	36 x 55 1/4	B	B	F,G	F,G,H,I
25	36 x 62	B	B	F,G,H,I	F,G,H,I
26	36 x 71	B	B	F,G,H,I	D,E,F,G,H,I
27	36 x 83	B	B	F,G,J,K	F,G,H,I,J,K
42 x 26	41 x 25	B	B	F,G	F,G
42 x 38 3/8	41 x 37 3/8	B	B	F,G	F,G,H,I
42 x 50 5/8	41 x 49 5/8	B	B	F,G	F,G,H,I
42 x 56 1/4	41 x 55 1/4	B	B	F,G,H,I	F,G,H,I
42 x 63	41 x 62	B	B	F,G,H,I	D,E,F,G,H,I
42 x 72	41 x 71	B	B	F,G,H,I	D,E,F,G,H,I
42 x 84	41 x 83	B	B	F,G,J,K	F,G,H,I,J,K
48 x 26	47 x 25	B	A,C	F,G	F,G
48 x 38 3/8	47 x 37 3/8	B	A,C	F,G	F,G,H,I
48 x 50 5/8	47 x 49 5/8	B	A,C	F,G	F,G,H,I
48 x 56 1/4	47 x 55 1/4	B	A,C	F,G,H,I	F,G,H,I
48 x 63	47 x 62	B	A,C	F,G,H,I	D,E,F,G,H,I
48 x 72	47 x 71	B	A,C	F,G,H,I	D,E,F,G,H,I
48 x 84	47 x 83	B	A,C	F,G,J,K	D,E,F,G,H,I,J,K
32	52 1/8 X 25	B	A,C	F,G	F,G
33	52 1/8 X 37 3/8	B	A,C	F,G	F,G,H,I
34	52 1/8 X 49 5/8	B	A,C	F,G,H,I	F,G,H,I
345	52 1/8 X 55 1/4	B	A,C	F,G,H,I	D,E,F,G,H,I
35	52 1/8 X 62	B	A,C	F,G,H,I	D,E,F,G,H,I
36	52 1/8 X 71	B	A,C	F,G,H,I	D,E,F,G,H,I
* 37	52 1/8 X 83	B	A,C	F,G,J,K	D,E,F,G,H,I,J,K

* 37 SIZE NOT AVAILABLE IN 1000 OR 1500 SERIES.

IMPORTANT INFORMATION & GENERAL NOTES (cont.)

ANCHOR INSTALLATION INSTRUCTIONS (cont.)

3/16" DIA. TAPPER CONCRETE SCREW (WITH NON-STRUCTURAL ONE BY WOOD BUCK):

12) WHERE WINDOW IS INSTALLED IN MASONRY OPENING WITH A NON-STRUCTURAL ONE BY WOOD BUCK (NOTE 7), USE A 3/16" DIA. TAPPER CONCRETE SCREW OF SUFFICIENT LTH. TO ACHIEVE MIN. EMBEDMENT OF 1-1/4" INTO MASONRY OR CONCRETE.
13) SEE THIS SHEET FOR TAPPER INSTALLATION ANCHOR LOCATION CHART. LETTER DESIGNATIONS ON THE TAPPER LOCATION CHART INDICATE WHERE TAPPER CONCRETE SCREWS ARE TO BE INSTALLED WHEN USING THE EXTERIOR ELEVATION AS A KEY.
14) TAPPER (RAWL) CONCRETE SCREW MANUFACTURED BY POWERS FASTENING, INC. WILL BE USED. TAPCON (by ELCO TEXTRON INC.) OR TITEN (by SIMPSON STRONG-TIE) CAN BE SUBSTITUTED WITH THE FOLLOWING LIMITATIONS FOR THE SINGLE HUNG WINDOW SIZES
(1) 18 1/8 x 62 AND (2) 30 1/2 x 84:
a) LIMIT TO 65 PSF, OR
b) INSTALL ONE ADDITIONAL FASTENER IN EACH JAMB OVER CHART REQUIREMENTS AT LOCATIONS H AND I.
15) ALL REMAINING FACTORY APPLIED INSTALLATION FASTENER HOLES NOT USED FOR TAPPER CONCRETE SCREW INSTALLATION SHOULD BE FILLED WITH #8 WOOD SCREWS OF SUFFICIENT LTH. TO PROVIDE MIN. 5/8 IN. EMBEDMENT INTO WOOD BUCK.

VIEWED FROM EXTERIOR (ANCHOR LOCATIONS)

ELEVATION

#10 WOOD SCREW (WITH STRUCTURAL TWO BY WOOD BUCK AND OPTIONAL ONE BY WOOD BUCK - SECTION A-A ALTERNATE ILLUSTRATES THIS OPTION, SIMILAR FOR SECTION B-B):

16) WHERE WINDOW IS INSTALLED IN MASONRY OPENING WITH A STRUCTUAL TWO BY WOOD BUCK, USE #10 WOOD SCREWS (ANSI B18.6.1) OF SUFFICIENT LENGTH TO ACHIEVE 1-3/8" MIN. EMBEDMENT INTO THE TWO BY WOOD BUCK.
16A) IF A TWO BY & ONE BY WOOD BUCK ARE USED (SEE SECTION A-A ALTERNATE, SIMILAR FOR SECTION B-B), THEN #10 WOOD SCREWS OF SUFFICIENT LENGTH TO ACHIEVE 1-3/8" MIN. EMBEDMENT INTO THE TWO BY WOOD BUCK WILL BE USED AND THE ONE BY WOOD BUCK WILL BE SECURED TO THE TWO BY WOOD BUCK AS REQUIRED IN NOTE 6 & 7.
17) #10 WOOD SCREWS SHALL BE INSTALLED AT ALL FACTORY APPLIED INSTALLATION FASTENER HOLE LOCATIONS.
18) WOOD SCREWS SHALL NOT BE USED TO FASTEN ASSEMBLY INTO THE END GRAIN OF WOOD.

DESIGN PRESSURE RATING & FBC REQUIREMENTS

19) IF EXACT WINDOW SIZE IS NOT LISTED IN TAPPER ANCHOR CHART FOR NON-STRUCTURAL BUCK INSTALLATION, USE ANCHOR QUANTITY LISTED FOR NEXT LARGER SIZE, FOR THE APPROPRIATE DESIGN PRESSURE REQ'D.
20) INSTALLATIONS DEPICTED IN THESE INSTRUCTIONS ACCEPTABLE FOR DESIGN PRESSURES TO 70 PSF FOR THE WINDOW SIZES SHOWN IN THE CHART. DESIGN PRESSURES (D.P.) SHOWN ARE POSITIVE AND NEGATIVE.
21) GLASS THICKNESS MAY VARY PER THE REQUIREMENTS OF ASTM E1300 GLASS CHARTS.
22) COMPLIES WITH FBC, CHAPTER 17 SECTIONS 1707.4.4.1 FOR ANCHORING REQUIREMENTS, 1707.4.4.2 FOR MASONRY, CONCRETE OR OTHER STRUCTURAL SUBSTRATES AND 1707.4.4.3 FOR WOOD OR APPROVED FRAMING MEMBERS, MARCH 1, 2002.
23) TWO BY WOOD BUCK AND/OR FRAMING AT THE HEAD AND JAMBS TO BE SECURELY FASTENED TO TRANSFER THE LOAD TO THE MASONRY, CONCRETE OR OTHER STRUCTURAL SUBSTRATE PER FBC, SECTION 1707.4.4.2 AND THE ENGINEER OF RECORD'S DETAILS.

REV B C D E
FLORIDA EXTRUDERS INTERNATIONAL, INC.
2540 JEWETT LANE
SANFORD, FLORIDA
CERTIFICATE OF AUTHORIZATION NO. 9235
TITLE: INSTALLATION DETAIL
SGL. HUNG FLANGE WINDOWS - SERIES 1000 , 1500 & 2000
DRAWN BY: RJA
APPROVED BY: RJA
DATE: 7/29/04
SCALE: NTS
DWG.: FLEX0016, SHT 2 OF 2

Disclaimer: The purpose of this installation drawing is to present the manufacturer's recommendations for anchorage (i.e., concrete screws, wood screws, nails and Vulkem structural adhesive) to achieve the design pressure specified on the fenestration product as required by Florida Building Code, Section 1707.4.4. Anchorage Methods. Recommendations regarding flashing, sealing, sealants or other joint sealant practices does not constitute a warranty either expressed or implied.

ROBERT J. AMOROSO, P.E.
FLA. PE LICENSE NO. 49752
JUL 2 9 2004

IMPORTANT INFORATION & GENERAL NOTES

These notes are provided to ere proper installation of Florida Extruders Milestone products and must be followed fully.

GENERAL INSTALLATION INSICTIONS

1) SHIM AS REQ'D. AT EACH IfALLATION ANCHOR WITH LOAD BEARING SHIM. MAX. ALLOWABLE SHIM STACK TO BE 1/4".
2) USE SILICONIZED ACRYLICULK BEHIND WINDOW FLANGE AT HEAD & JAMBS. SILL MUST BE ATTACHED TO THE SUBSTRATE WITH VULK816 ADHESIVE CAULK OR APPROVED EQUAL. APPLICATION OF VULKEM 116 ADHESIVE CAULK OR APPROVEQUAL AT FRAME SILL MUST COMPLY WITH SEALANT MANUFACTURER'S RECOMMENDATIONS.
3) USE SILICONIZED ACRYLICULK FOR PERIMETER SEAL AROUND EXTERIOR OF WINDOW FLANGE AND TO SEAL HEADS OF INSTALLATION FASIERS.
4) FLORIDA EXTRUDERS 1000RIES SINGLE HUNG IS SHOWN. THIS PRINT ALSO APPLIES TO THE FLORIDA EXTRUDERS 1500 AND 2000 SES SINGLE HUNGS.
5) WINDOW FRAME MATERIALUMINUM ALLOY 6063.
6) BUILD DOWN AROUND CUD PORTION OF WINDOW FRAME TO BE ENGINEERED BY OTHERS. BUILD DOWN MUST BE OF SUFFICIENT STRITH TO ADEQUATELY TRANSFER LOAD FROM WINDOW TO THE STRUCTURE PER FBC, SECTION 1707.4.4.
7) WINDOW UNIT CAN BE MUD TO OTHER UNITS USING ALUMINUM TUBE MULLION. SEE MULLION INSTALLATION SHEETS FOR RJIREMENTS.

ANCHOR INSTALLATION INSTITIONS

GENERAL:

8) NAIL ATTACHMENT OF NONRUCTURAL ONE BY BUCK IS 4" FROM EACH CORNER AND 8" ON CENTER. USE A HARDENED "T-NAIL" WITH A 0?" DIAMETER AND 1 3/8" LENGTH (5/8" EMBEDMENT), A HARDENED "MASONRY NAIL" WITH A 0.148" DIAMETEND 1 1/2" LENGTH (3/4" EMBEDMENT) OR EQUIVALENT FOR THE JAMBS. USE A 0.113" DIAMETER COMMON WINAIL WITH A 3/4" EMBEDMENT OR EQUIVALENT FOR THE HEAD.
9) APPLIES TO ALL NON-STRURAL BUCKS LESS THAN 1 1/2" THICKNESS. NOT INTENDED TO LIMIT TO NOMINAL ONE BY WOOD BUCK ONLY. BG GREATER THAN 1" NOMIMAL (3/4" THICK) AND LESS THAN 2" NOMINAL (1 1/2" THICK) WILL REQUIRE NAIL LETH SUFFICIENT TO MEET EMBEDMENT REQUIREMENTS OF NOTE 8.
10) ALL INSTALLATION ANCHOMUST BE MADE OF CORROSION RESISTANT MATERIALS OR HAVE A CORROSION RESISTANT COATING APPLIED TABLE FOR THE ENVIRONMENT AND/OR FRAMING MATERIAL. WHERE ANCHORS ARE USED IN PRESSURE-PRESETIVE TREATED WOOD, THE WOOD SUPPLIER SHALL BE CONSULTED FOR RECOMMENDATION OF ANCHOCOMPATIBLE WITH THE PRESSURE-PRESERVATIVE TREATMENT PROCESS USED.
11) ALL FIELD SUPPLIED HOLE THE FRAME (IF REQUIRED) WILL BE 3/16" IN DIAMETER.
12) WOOD SCREWS SHALL MEENSI B18.6.1 DIMENSIONAL REQUIREMENTS.
13) IF WOOD TENDS TO SPLITE-BORE HOLES AS FOLLOWS: #8 WOOD SCREW - 1/8" DIA. PILOT HOLE & #10 WOOD SCREW - 9/64" DIA. PILHOLE (NATIONAL DESIGN SPECIFICATION FOR WOOD CONSTRUCTION).

3/16" DIA. TAPPER CONCRESCREW (WITH NON-STRUCTURAL ONE BY WOOD BUCK):

15) WHERE WINDOW IS INSTAD IN MASONRY OPENING WITH A NON-STRUCTURAL ONE BY WOOD BUCK (NOTE 7), USE A 3/16" DIA. TAPPER CORETE SCREW OF SUFFICIENT LTH. TO ACHIEVE MIN. EMBEDMENT OF 1-1/4" INTO MASONRY OR CONCRETE.
16) SEE SHEET 2 FOR INSTALLAN ANCHOR LOCATION CHART. LETTER DESIGNATIONS ON THE LOCATION CHART INDICATE WHERE TAPPER CONITE SCREWS ARE TO BE INSTALLED WHEN USING THE EXTERIOR ELEVATION AS A KEY.

[SEE SHEET 2 FOR CONTINUATION OF NOTES]

REV	DESCRIPTION	DATE	INI
C	REVISED NOTES 3, 8, 9 & 10. ADDED NOTE 27. REVISED AND/OR ADDED RELATED REFERENCES AND ILLUSTRATIONS FOR NOTE REVISIONS.	12/19/03	RJA
D	ADDED DISCLAIMER AND CLARIFIED LOCATION OF JAMB ANCHORS.	7/29/04	RJA

FORIDA EXTRUDERS INTERNATIONAL, INC.
2540 JEWETT LANE
SANFORD, FLORIDA
CEICATE OF AUTHORIZATION NO. 9235
TIT: INSTALLATION DETAIL SINGLE HUNG RADIUS HEAD
FLGE W/FRAME BUILD DOWN - SERIES 1000 , 1500 & 2000
DRN BY: JBH
APPROVED BY: RJA
DA 7/29/04
SCALE: NTS
DWG.: FLEX0040 SHEET 1 OF 2

ANCHOR LOCATION CHART (SEE NOTES BELOW)					
CALL SIZE	BUCK SIZE	LOCATIONS IN HEAD (see note 1 below)		LOCATIONS IN JAMB (see notes 2 & 3 below)	
		30PSF TO 40PSF	41PSF TO 70PSF	30PSF TO 40PSF	41PSF TO 70PSF
12	18 1/8 X 27 5/16	A,C	A,C	F,G	F,G
13	18 1/8 X 39 11/16	A,C	A,C	F,G	F,G
14	18 1/8 X 51 15/16	A,C	A,C	F,G	F,G
145	18 1/8 X 57 19/32	A,C	A,C	F,G	F,G (a)
15	18 1/8 X 64 5/16	A,C	A,C	F,G	F,G (a)
16	18 1/8 X 73 5/16	A,C	A,C	F,G (a)	F,G,H,I
1H2	25 1/2 X 28 9/16	A,C	A,C	F,G	F,G
1H3	25 1/2 X 40 15/16	A,C	A,C	F,G	F,G
1H4	25 1/2 X 53 3/16	A,C	A,C	F,G	F,G,H,I
1H45	25 1/2 X 58 13/16	A,C	A,C	F,G	F,G,H,I
1H5	25 1/2 X 65 9/16	A,C	A,C	F,G	F,G,H,I
1H6	25 1/2 X 74 9/16	A,C	A,C	F,G	F,G,H,I
30 1/2 X 30 7/32	29 1/2 X 29 7/32	A,C	A,C	F,G	F,G
30 1/2 X 42 19/32	29 1/2 X 41 19/32	A,C	A,C	F,G	F,G
30 1/2 X 54 27/32	29 1/2 X 53 27/32	A,C	A,C	F,G	F,G,H,I
30 1/2 X 60 15/32	29 1/2 X 59 15/32	A,C	A,C	F,G	F,G,H,I
30 1/2 X 67 7/32	29 1/2 X 66 7/32	A,C	A,C	F,G (a)	F,G,H,I
30 1/2 X 76 7/32	29 1/2 X 75 7/32	A,C	A,C	F,G,H,I	F,G,H,I (b)
22	36 x 30 5/16	A,B,C	A,B,C	F,G	F,G
23	36 x 42 11/16	A,B,C	A,B,C	F,G	F,G (a)
24	36 x 54 15/16	A,B,C	A,B,C	F,G	F,G,H,I
245	36 x 60 9/16	A,B,C	A,B,C	F,G (a)	F,G,H,I
25	36 x 67 5/16	A,B,C	A,B,C	F,G,H,I	F,G,H,I (b)
26	36 x 76 5/16	A,B,C	A,B,C	F,G,H,I	D,E,F,G,H,I
42 x 32 5/32	41 x 31 5/32	A,B,C	A,B,C	F,G	F,G
42 x 44 17/32	41 x 43 17/32	A,B,C	A,B,C	F,G	F,G,H,I
42 x 56 25/32	41 x 55 25/32	A,B,C	A,B,C	F,G	F,G,H,I
42 x 62 3/8	41 x 61 3/8	A,B,C	A,B,C	F,G,H,I	F,G,H,I
42 x 69 5/32	41 x 68 5/32	A,B,C	A,B,C	F,G,H,I	D,E,F,G,H,I
42 x 78 5/32	41 x 77 5/32	A,B,C	A,B,C	F,G,H,I	D,E,F,G,H,I
48 x 33 5/32	47 x 32 5/32	A,B,C	A,B,C	F,G	F,G
48 x 45 17/32	47 x 44 17/32	A,B,C	A,B,C	F,G	F,G,H,I
48 x 57 25/32	47 x 56 25/32	A,B,C	A,B,C	F,G (a)	F,G,H,I
48 x 63 3/8	47 x 62 3/8	A,B,C	A,B,C	F,G,H,I	F,G,H,I (b)
48 x 70 5/32	47 x 69 5/32	A,B,C	A,B,C	F,G,H,I	D,E,F,G,H,I
48 x 79 5/32	47 x 78 5/32	A,B,C	A,B,C	F,G,H,I	D,E,F,G,H,I (c)
32	52 1/8 X 33	A,B,C	A,B,C	F,G	F,G
33	52 1/8 X 45 3/8	A,B,C	A,B,C	F,G	F,G,H,I
34	52 1/8 X 57 5/8	A,B,C	A,B,C	F,G,H,I	F,G,H,I
345	52 1/8 X 63 1/4	A,B,C	A,B,C	F,G,H,I	D,E,F,G,H,I
35	52 1/8 X 70	A,B,C	A,B,C	F,G,H,I	D,E,F,G,H,I
36	52 1/8 X 79	A,B,C	A,B,C	F,G,H,I	D,E,F,G,H,I (c)

ANCHOR LOCATION CHART NOTES:

1. Locations in HEAD for #10 Wood Screws into structural "two by" wood buck or "one by" wood buck/structural build-down.
2. Locations in JAMB for 3/16" TAPPER Concrete Screws into non-structural buck & concrete or masonry.
3. Locations in JAMB for #10 Wood Screws into structural "two by" buck. Where indicated by (a), (b) or (c) above, additional #10 Wood Screws shall be added at the following locations.
   (a) One additional anchor required in each jamb at locations "H" and "I".
   (b) One additional anchor required in each jamb at locations "D" and "E".
   (c) One additional anchor required in each jamb at locations "J" and "K".
4. Dimensions given are for half radius head units, full radius will be shorter.

ELEVATION
VIEWED FROM EXTERIOR

IMPORTANT INFORMATION & GENERAL NOTES (cont.)

ANCHOR INSTALLATION INSTRUCTIONS (cont.)

3/16" DIA. TAPPER CONCRETE SCREW (WITH NON-STRUCTURAL ONE BY WOOD BUCK) (cont.):

17) TAPPER (RAWL) CONCRETE SCREW MANUFACTURED BY POWERS FASTENING, INC. WILL BE USED. TAPCON (by ELCO TEXTRON INC.) OR TITEN (by SIMPSON STRONG-TIE) CAN BE SUBSTITUTED WITH THE FOLLOWING LIMITATIONS FOR THE SINGLE HUNG WINDOW CALL SIZE 15:
a) LIMIT TO 65 PSF, OR
b) INSTALL ONE ADDITIONAL FASTENER IN EACH JAMB OVER CHART REQUIREMENTS AT LOCATIONS H AND I.
18) ALL REMAINING FACTORY APPLIED INSTALLATION FASTENER HOLES NOT USED FOR TAPPER CONCRETE SCREW INSTALLATION SHOULD BE FILLED WITH #8 WOOD SCREWS OF SUFFICIENT LTH. TO PROVIDE MIN. 5/8 IN. EMBEDMENT INTO WOOD BUCK.

#10 WOOD SCREW (WITH STRUCTURAL TWO BY WOOD BUCK OR ONE BY WOOD BUCK/STRUCTURAL BUILD-DOWN):

19) WHERE WINDOW IS INSTALLED IN MASONRY OPENING WITH A STRUCTUAL TWO BY WOOD BUCK OR ONE BY WOOD BUCK/STRUCTURAL BUILD-DOWN, USE #10 WOOD SCREWS (ANSI B18.6.1) OF SUFFICIENT LENGTH TO ACHIEVE 1-3/8" MIN. EMBEDMENT INTO THE TWO BY WOOD BUCK OR THE STRUCTURAL BUILD-DOWN FRAMING COMPONENT.
20) SEE SHEET 2 FOR INSTALLATION ANCHOR LOCATION CHART. LETTER DESIGNATIONS ON THE LOCATION CHART INDICATE WHERE #10 WOOD SCREWS ARE TO BE INSTALLED WHEN USING THE EXTERIOR ELEVATION AS A KEY. ALSO SEE "ANCHOR LOCATION CHART NOTES", NOTE 3, FOR WINDOW SIZES REQUIRING ADDITIONAL ANCHORS AND LOCATIONS.
21) #10 WOOD SCREWS SHALL NOT BE USED TO FASTEN ASSEMBLY INTO THE END GRAIN OF WOOD.
22) ALL REMAINING FACTORY APPLIED INSTALLATION FASTENER HOLES NOT USED FOR #10 WOOD SCREW INSTALLATION SHOULD BE FILLED WITH #8 WOOD SCREWS OF SUFFICIENT LTH. TO PROVIDE MIN. 5/8 IN. EMBEDMENT INTO WOOD BUCK.

DESIGN PRESSURE RATING & FBC REQUIREMENTS

23) IF EXACT WINDOW SIZE IS NOT LISTED IN ANCHOR LOCATION CHART, USE ANCHOR QUANTITY LISTED FOR NEXT LARGER SIZE, FOR THE APPROPRIATE DESIGN PRESSURE REQ'D.
24) INSTALLATIONS DEPICTED IN THESE INSTRUCTIONS ACCEPTABLE FOR DESIGN PRESSURES TO 70 PSF FOR THE WINDOW SIZES SHOWN IN THE CHART. DESIGN PRESSURES (D.P.) SHOWN ARE POSITIVE AND NEGATIVE.
25) GLASS THICKNESS MAY VARY PER THE REQUIREMENTS OF ASTM E1300 GLASS CHARTS.
26) COMPLIES WITH CHAPTER 17 SECTIONS 1707.4.4.1 FOR ANCHORING REQUIREMENTS, 1707.4.4.2 FOR MASONRY, CONCRETE OR OTHER STRUCTURAL SUBSTRATES AND 1707.4.4.3 FOR WOOD OR APPROVED FRAMING MEMBERS, MARCH 1, 2002.
27) STRUCTURAL BUILD-DOWN AT THE HEAD TO BE DESIGN TO TRANSFER THE LOAD TO THE MASONRY, CONCRETE OR OTHER STRUCTURAL SUBSTRATE PER FBC, SECTION 1707.4.4.2 OR TO THE WOOD OR APPROVED FRAMING MEMBERS PER FBC, SECTION 1707.4.4.3AND THE ENGINEER OF RECORD'S DETAILS.

REV B C D
FLORIDA EXTRUDERS INTERNATIONAL, INC.
2540 JEWETT LANE
SANFORD, FLORIDA
CERTIFICATE OF AUTHORIZATION NO. 9235
TITLE: INSTALLATION DETAIL SINGLE HUNG RADIUS HEAD
FLANGE W/FRAME BUILD DOWN - SERIES 1000 , 1500 & 2000
DRAWN BY: RJA
APPROVED BY: RJA
DATE: 7/29/04
SCALE: NTS
DWG.: FLEX0040 SHEET 2 OF 2

REVISIONS :

Maronda Homes
COPYRIGHT © 2002 MARONDA HOMES
(407) 321-0064 4005 MARONDA WAY SANFORD, FLORIDA

FLORIDA EXTRUDERS
WINDOWS IN BLOCK

RELEASE DATE:

SHEET:
1 of 3

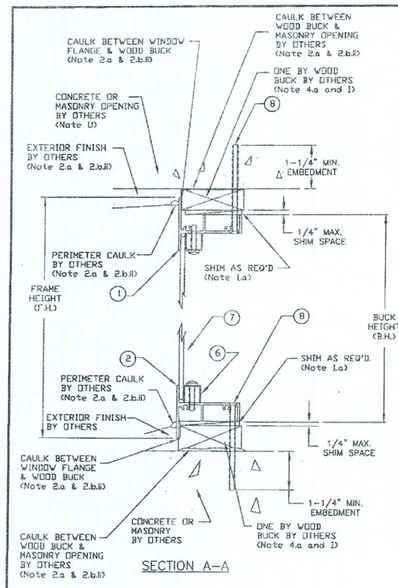

SECTION A–A

DISCLAIMER: The purpose of this installation drawing is to present the manufacturer's recommendations for anchorage (i.e., concrete screws, wood screws, tapping screws, nails and Vulkem Structural Adhesive (or other approved equal) as applicable) to achieve the design pressure specified on the fenestration product as required by the 2001 Florida Building Code (FBC), Section 1707.4.4, 2004 FBC-Building, Section 1714.5.4 and the 2004 FBC-Residential, Section R613.6. Recommendations regarding flashing, sealing, sealants or other joint sealant practices does not constitute a warranty either expressed or implied.

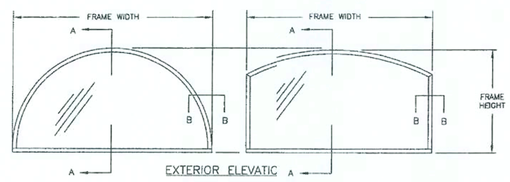

EXTERIOR ELEVATIC

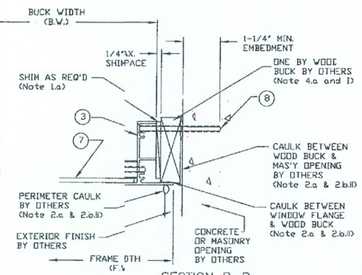

SECTION B–B

GENERAL NOTES

(1 to 15) See General Notes Drawing FLEX20100, Sheet 1 & 2.

(A) Milestone Series 1000 Designer Fixed Aluminum Window is shown. Also applicable to Series 1750 and 2000 Designer Fixed Aluminum Windows.

(B) Drawing applicable to Non-Impact Resistant glazed windows.

(C) Production Glazing may differ from that tested as allowed by ANSI/AAMA/NWWDA 101/I.S. 2 - 97 or 101/I.S. 2 NAFS and applicable Building Code. See Note 12 and 13 on Drawing FLEX 20100 for further details.

(D) For Fastener Location & Quantities see Sheet 2 of this drawing. See Note (H) regarding deviations.

(E) Concrete screw edge distance measured from edge of concrete/masonry/block to centerline of concrete screw must meet or exceed 2 1/4". Minimum size and embedment per Parts List. See Note (H) regarding deviations.

(F) Wood or tapping screw edge distance measured from edge of wood to centerline of wood or tapping screw must meet or exceed 1". Minimum size and embedment per Parts List. See Note (H) regarding deviations.

(G) All field supplied holes in the frame (if required) will be 3/16" in diameter for 3/16" concrete screws and #10 wood screws.

(H) Any deviation less than the minimum requirements stated must be approved by the manufacturer or engineered by "other" Design Professional in accordance with the applicable Building Code and Product Approval.

PARTS LIST

1 Head - Flange Fra
2 Sill - Flange Fram
3 Jamb - Flange Fra
4 Not Used
5 Not Used
6 Glazing Bead - Rigvinyl
7 Glazing - See Noti) and (C)
8 3/16" Dia. Flat He Concrete Screw with minimum workingd in shear of 255 lbs at 1 1/4" embedment. : Note (J) on this drawing and Note 7 on Drng FLEX20100.
9 #10 Wood or Tapc Screw with a minimum embedment of 1-: Into "Structural Two By Buck or Framing" .e Note (L) on this drawing and Note 8 on Drng FLEX20100.

Florida Extruders Int'l., Inc.
2540 Jewett Lane - Sanford, FL 32771
407-323-3300 - 407-322-3507 (fax)
www.floridaextruders.com
Florida COA No. 9235

TITLE: Milestone Series 1000, 1750 and 2000 Non-Impact Resistant Aluminum Flange Frame Designer Fixed Window Installation Drawing for Masonry Substrate & Concrete Header

No.	Date	By	Description
1	12/27/05	JH	Sheetmetal Detail

Date: 12/27/05
Scale: NTS
Drawn By: RJA
Checked By: JH

Robert J. Amoruso, P.E.
FL License No. 49752

Drawing No. FLEX28110
Sheet 1 of 2

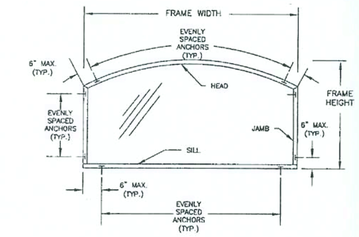

EXTERIOR ELEVATION

FASTENER SPACING ILLUSTRATION
EYEBROW ARCH DESIGNER WINDOW SHOWN AS EXAMPLE

EXAMPLE:

HEAD (CURVED PORTION) SECURED TO CONCRETE HEADER, JAMBS OR SILL SECURED TO CMU AND CAST–SILL RESPECTIVELY WITH ONE BY BUCK

USE 3/16" DIA. CONCRETE SCREWS AT 24" O.C. SPACING BETWEEN ANCHORS AND SPACED 6" MAXIMUM FROM CORNERS.

– or –

HEAD (CURVED PORTION), JAMBS OR SILL SECURED TO STRUCTURAL TWO BY BUCK (ATTACHED TO CONCRETE HEADER, JAMBS OR SILL)

USE #10 WOOD SCREWS AT 12" O.C. SPACING BETWEEN FASTENERS AND SPACED 6" MAXIMUM FROM CORNERS. (NOTE: 12" SPACING FOR EXAMPLE EYEBROW APPLICATION. OTHER APPLICATIONS MAY REQUIRE 10" SPACING PER NOTE (P))

FASTENER INSTALLAT ATION INSTRUCTIONS - FLEX28110

3/16" DIA. CONCRETE TE SCREW WITH NON-STRUCTURAL ONE BY WOOD BUCK AND CONCRETE BUILD-DOWN:

(I) Nail attachment of n f non-structural one by buck per Note 4.a.ii.2 Drawing FLEX20100.
(J) Where window is ins installed in an opening with a non-structural one by wood buck for the head, sill and jambs, use a 3/16" diameteester concrete screw of sufficient length to achieve minimum embedment of 1-1/4" into masonry or concrete e Note. See "Parts List" on Sheet 1 of this drawing for concrete screw size, embedment and load requirements. See Fle FLEX20100, Note 7 for additional concrete screw requirements.
(K) Fastener spacing sha shall be per Notes (O), (Q) and (R) below.

#10 WOOD SCREW W WITH STRUCTURAL TWO BY WOOD BUCK AND CONCRETE BUILD-DOWN. USED WHEN TWO BY BUCK I K EMPLOYED IN LIEU OF ONE BY BUCK (THIS CONFIGURATION NOT SHOWN):

(L) Where window is inst installed in an opening with a structural two by wood buck for the head, sill and jambs, use #10 wood screws of of sufficient length to achieve 1-3/8" min. embedment into the two by wood buck. See "Parts List" on Sheet 1 of tl of this drawing for wood screw size and embedment. See FLEX20100, Note 8 for additional wood screw requirements.
(M) Wood screws shall n ll not be used to fasten assembly into the end grain of wood.
(N) Fastener spacing sha shall be per Notes (P), (Q) and (R) below.

FASTENER SPACING (S (See Elevation View on this Sheet):

(O) Concrete screw spac spacing shall be as follows:
- 6" maximum from from each corner of head, sill or jambs, and
- evenly spaced be between corner anchors but not exceeding 24" o.c. spacing in head, sill or jambs.

(P) #10 wood screw spa spacing shall be as follows:
- 6" maximum from from each corner of head, sill or jambs, and
- evenly spaced be between corner anchors but not exceeding 12" o.c. spacing in head, sill or jambs for the following configurations:
  - eyebrow
  - half-circle an arch
  - half-eyebrow row
  - octagon
  - fan
  - pentoid
  - full-circle
  - half-circle
  - triangle
  - trapezoid
  - oval
- evenly spaced be between corner anchors but not exceeding 10" o.c. spacing in head, sill or jambs for the following configurations:
  - quarter-circle circle
  - quarter-circle circle arch
  - half-fan

(Q) Spacing in Note (O) (P) and (P) above based on the use of either a concrete screw or #10 wood screw as required for securing the windo window frame into the substrate as follows (see illustration this sheet):
- Concrete screw in into concrete or masonry using a non-structural One By Wood Buck.
- #10 wood screw w into a Two By Wood Buck structurally attached to concrete or masonry substrate.

(R) If configuration requ requires combination of concrete screw and #10 wood screw in either a head, sill or jamb, the lower of the maximu mum spacings above shall be used.

DESIGN PRESSURE RA RATING & FBC CODE COMPLIANCE

(S) Installations depicted ed in these instructions acceptable for design pressures to 70 PSF. Design Pressures (D.P.) are positive and negative. Overall window assembly design pressure may be less than that shown in the fastener quantity table and shall be determined in accordance with Note 13 of FLEX20100.
(T) Production Glazing mal may differ from that tested as allowed by ANSI/AAMA/NWWDA 101/I.S. 2 - 97 or 101/I.S. 2 NAFS and applicable Building Code. See Note 12 and 13 on Drawing FLEX 20100 for further details.
(U) Concrete Header at ho load and/or two by wood buck and/or framing at the head, sill and jambs to be securely fastened to transfer the lo load to the masonry, concrete or other structural substrate per the FBC and the engineer of record's details as applica cable.
(V) See FLEX20100, Notes tes 10 to 15 for additional FBC Code Compliance.

Florida Extruders Int'l., Inc.
2540 Jewett Lane - Sanford, FL 32771
407-323-3300 - 407-322-3507 (fax)
www.floridaextruders.com
Florida COA No. 9235

TITLE: Milestone Series 1000, 1750 and 2000 Non-Impact Resistant Aluminum Flange Frame Designer Fixed Window Installation Drawing for Masonry Substrate & Concrete Header

No.	Date	By	Description
1	12/27/05	JH	Sheetmetal Detail

Date: 12/27/05
Scale: NTS
Drawn By: RJA
Checked By: JH

Drawing No. FLEX28110
Sheet 2 of 2

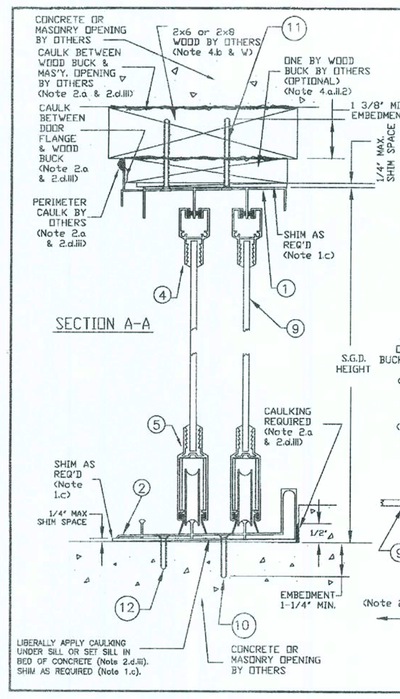

SECTION A–A

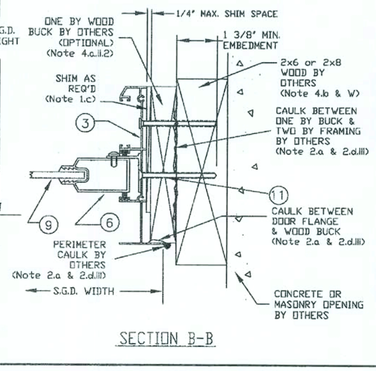

SECTION B–B

PARTS LIST

1 Head - Flange Frame
2 Sill - Flange Frame
3 Jamb - Flange Frame
4 Head - Panel
5 Sill - Panel
6 Lock Stile - Panel
7 Interlock - Panel
8 Hook Strip
9 Glazing - See Note (B) and (V)
10 3/16" Dia. Flat Head Concrete Screw with minimum working load in shear of 255 lbs at 1 1/4" embedment. See Note (K) on this drawing and Note 7 on Drawing FLEX20100.
11 #10 Wood or Tapping Screw with a minimum embedment of 1-3/8" into two by framing. See Note (P) on this drawing and Note 8 on Drawing FLEX20100.
12 #10 Wood or Tapping Screw with Plastic Inserts (Note 8.j on FLEX20100) at a minimum embedment of 1" into the concrete sill. See Note (O) on this drawing and Note 8 on Drawing FLEX20100.
13 #10 Wood or Tapping Screw with a minimum embedment of 7/8" into the "One By Wood Buck". See Note (R) on this drawing and Note 8 on Drawing FLEX20100.

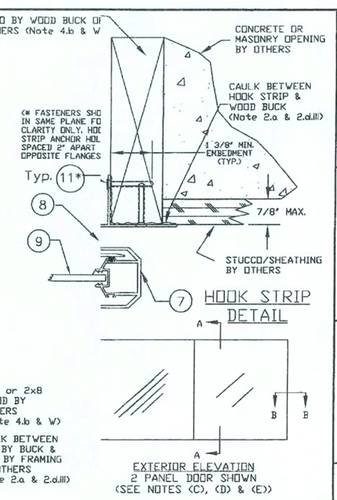

DISCLAIMER: The purpose of this installation drawing is to present the manufacturer's recommendations for anchorage (i.e., concrete screws, wood screws, tapping screws, nails and Vulkem Structural Adhesive (or other approved equal) as applicable) to achieve the design pressure specified on the fenestration product as required by the 2001 Florida Building Code (FBC), Section 1707.4.4, 2004 FBC-Building, Section 1714.5.4 and the 2004 FBC-Residential, Section R613.6. Recommendations regarding flashing, sealing, sealants or other joint sealant practices does not constitute a warranty either expressed or implied.

Robert J. Amoruso, P.E.
FL License No. 49752

Drawing No. FLEX24112
Sheet 1 of 2

Florida Extruders Int'l., Inc.
2540 Jewett Lane - Sanford, FL 32771
407-323-3300 - 407-322-3507 (fax)
www.floridaextruders.com
Florida COA No. 9235

TITLE: Milestone Series 1000 & 2000 Non-Impact Resistant Aluminum Flange Frame Designer Fixed Window Installation Drawing for Masonry Substrate w/#10 Wood Screws

No.	Date	By	Description
0	12/27/05	JH	Sheetmetal (FLEX20)

Date: 12/27/05
Scale: NTS
Drawn By: RJA
Checked By: JH

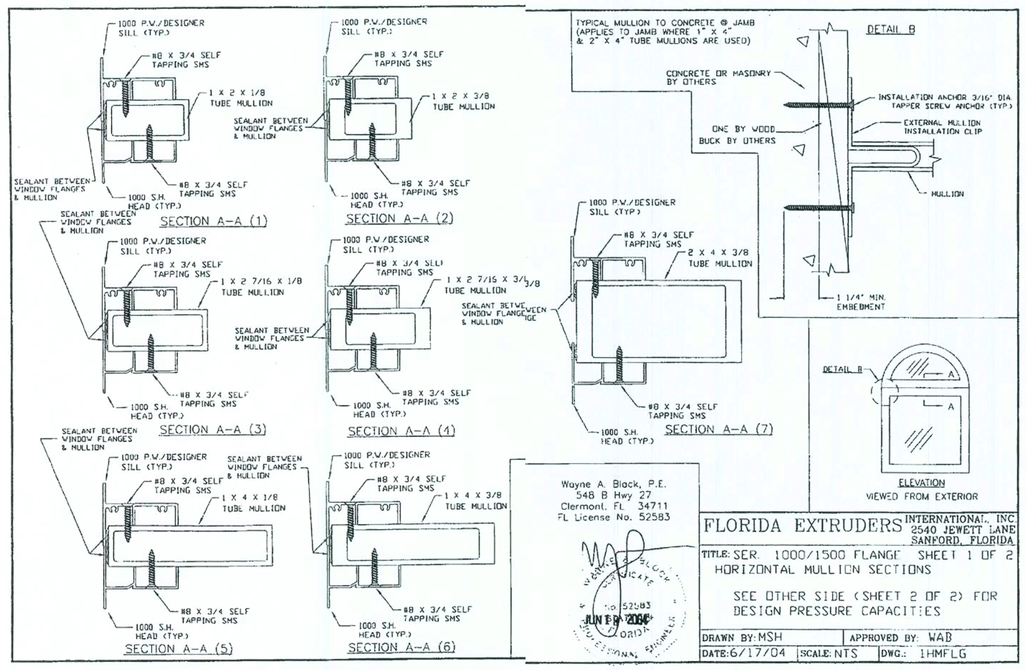

Wayne A. Black, P.E.
548 B Hwy 27
Clermont, FL 34711
FL License No. 52583

FLORIDA EXTRUDERS INTERNATIONAL, INC.
2540 JEWETT LANE
SANFORD, FLORIDA

TITLE: SER. 1000/1500 FLANGE SHEET 1 OF 2
HORIZONTAL MULLION SECTIONS

SEE OTHER SIDE (SHEET 2 OF 2) FOR DESIGN PRESSURE CAPACITIES

DRAWN BY: MSH	APPROVED BY: WAB
DATE: 6/17/04 SCALE: NTS	DWG.: 1HMFLG

REVISIONS :

Maronda Homes
4005 MARONDA WAY SANFORD, FLORIDA
(407) 321-0064

FLORIDA EXTRUDERS
WINDOWS IN BLOCK
RELEASE DATE:

SHEET: 2 of 3

...\title_blocks\18x24-1252d.dgn Mar. 31, 2006 13:32:09

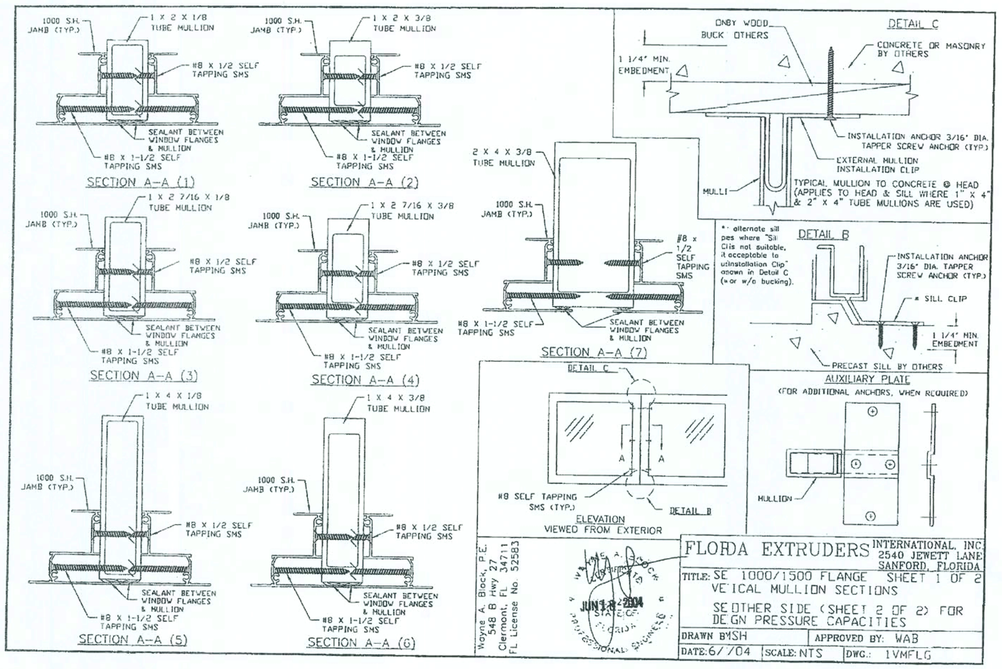

FASTENER INSTALLATION CHART											
Nominal Door Size and Configuration	Door Size	REQUIRED QUANTITIES OF FASTENERS									
		HEAD (HW-W8)			SILL (C8)			JAMBS (HW-W8)		HOOK STRIP (HW-W8)	
		TO 45 PSF	45 PSF TO 60 PSF	61 PSF TO 70 PSF	TO 45 PSF	45 PSF TO 60 PSF	61 PSF TO 70 PSF	TO 45 PSF	TO 70 PSF	TO 45 PSF	TO 70 PSF
4068/ XX, OX, XO	48 x 80	6	6	6	3	3	3	4	5		
5068 XX, OX, XO	60 x 80	6	6	6	3	3	4	5	6		
6068 XX, OX, XO	72 x 80	8	8	8	4	4	4	6	8		
8068 XX, OX, XO	96 x 80	10	10	10	5	5	5	6	8		
10068 XX, OX, XO	120 x 80	12	12	12	6	6	7 (D1)	8	8		
5080 XX, OX, XO	60 x 96	8	8	8	3	3	4	10	10		
6080 XX, OX, XO	72 x 96	8	8	8	4	4	4	10	10		
8080 XX, OX, XO	96 x 96	10	10	10	5	5	5	10	10		
10080 XX, OX, XO	120 x 96	12	12	12	6	6	7 (D1)	10	10		
50100 XX, OX, XO	60 x 120	8	8	8	3	3	3	12	12		
60100 XX, OX, XO	72 x 120	8	8	8	4	4	4	12	12		
80100 XX, OX, XO	96 x 120	10	10	10	5	5	5	12	12		
10068 OXO	120 1/8 x 80	12	12	12	6	6	6	8	8		
12068 OXO	144 1/8 x 80	14	14	14	7	7	8 (D2)	8	8		
13068 OXO	156 1/8 x 80	16	16	16	8	8 (D2)	11 (D2)	8	8		
10080 OXO	120 1/8 x 96	12	12	12	6	6	6	10	10		
12080 OXO	144 1/8 x 96	14	14	14	7	8 (D1)	9 (D2)	10	10		
13080 OXO	156 1/8 x 96	16	16	16	8	11	13	10	10		
10100 OXO	120 1/8 x 120	12	12	12	6	6	6	12	12		
12100 OXO	144 1/8 x 120	14	14	14	7	8 (D1)	9 (D2)	12	12		
13100 OXO	156 1/8 x 120	16	16	16	8	11	13	12	12		
9068 /OXO	108 5/8 x 80	12	12	12	6	6	6	8	8		
12068 /OXO	142 5/8 x 80	14	14	14	7	7	8 (D1)	8	8		
13068 /OXO	154 5/8 x 80	16	16	16	8	10 (D2)	11 (D2)	8	8		
9080 /OXO	108 5/8 x 96	12	12	12	6	6	6	10	10		
12080 /OXO	142 5/8 x 96	14	14	14	7	8 (D1)	9 (D2)	10	10		
13080 /OXO	154 5/8 x 96	16	16	17	8	11 (D2)	13	10	10		
9100 /OXO	108 5/8 x 120	12	12	12	6	6	6	12	12		
12100 /OXO	142 5/8 x 120	14	14	14	7	9 (D2)	10 (D3)	12	12		
13100 /OXO	154 5/8 x 120	16	16	17	8	11	13	12	12		
12068 /OXO	143 5/8 x 80	14	14	14	7	7	8 (D1)	8	8		
13068 /OXO	155 5/8 x 80	16	16	16	8	10 (D1)	12 (D2)	8	8		
12080 /OXO	143 5/8 x 96	14	14	14	7	8	7 (D1)	10	10		
13080 /OXO	155 5/8 x 96	16	16	16	8	8 (D1)	9 (D2)	10	10		
12100 /OXO	143 5/8 x 120	14	14	14	7	9 (D2)	10 (D3)	12	12		
13100 /OXO	155 5/8 x 120	16	16	16	8	12 (D3)	14 (D4)	12	12		
12068 /OXO	118 5/8 x 80	12	12	12	6	6	7 (D1)	12	12		
12100 /OXO	143 5/8 x 120	14	14	14	7	9 (D2)	10 (D3)	12	12		
13100 /OXO	155 5/8 x 120	16	16	22	8 (D4)	13 (D5)	16 (D7)	12	12		
12068 /XXX	117 1/4 x 80	12	12	12	6	6	6	8	8		
12080 /XXX	141 1/4 x 80	14	14	14	7	7	8 (D1)	8	8		
13080 /XXX	153 1/4 x 80	16	16	16	8 (D1)	10 (D2)	12 (D4)	8	8		
12080 /XXX	117 1/4 x 96	12	12	12	6	7	7 (D1)	10	10		
12096 /XXX	141 1/4 x 96	14	14	14	7	8 (D1)	9 (D2)	10	10		
13096 /XXX	153 1/4 x 96	16	16	19	8 (D1)	12 (D4)	13 (D5)	10	10		
100100 /XXX	117 1/4 x 120	12	12	12	6	7 (D1)	9 (D2)	12	12		
120100 /XXX	141 1/4 x 120	14	14	14	7	8 (D1)	10 (D3)	12	12		
130100 /XXX	153 1/4 x 120	16	16	21	8 (D1)	13 (D5)	16 (D7)	12	12		

ANCHOR INSTALLATION CHART NOTES:

1) IN SOME CASES CONCRETE SCREWS ARE REQ'D. IN BOTH FACTORY APPLIED INSTALLATION HOLES: "D1" THROUGH "D7" DESIGNATES IN WHICH SIDE A CONFIGURATIONS TWO CONCRETE SCREWS ARE REQ'D.
2) "D1" MEANS, INSTALL TWO CONCRETE SCREWS IN ONE SET OF INSTALLATION HOLES.
3) "D2" MEANS, INSTALL TWO CONCRETE SCREWS IN TWO SETS OF INSTALLATION HOLES.
4) "D3" MEANS, INSTALL TWO CONCRETE SCREWS IN THREE SETS OF INSTALLATION HOLES.
5) "D4" MEANS, INSTALL TWO CONCRETE SCREWS IN FOUR SETS OF INSTALLATION HOLES.
6) "D5" MEANS, INSTALL TWO CONCRETE SCREWS IN FIVE SETS OF INSTALLATION HOLES.
7) "D6" MEANS, INSTALL TWO CONCRETE SCREWS IN SIX SETS OF INSTALLATION HOLES.
8) "D7" MEANS, INSTALL TWO CONCRETE SCREWS IN SEVEN SETS OF INSTALLATION HOLES.
9) LOCATION OF ADDITIONAL CONCRETE SCREWS IN SILL SHOULD BE PRIORITIZED AS FOLLOWS:
A: FIRST ADJACENT TO INTERLOCK OR BUTT STILES IN SILL.
B: SECONDARY, AT EACH END OF SILL NEAR JAMB CORNER, IF NEEDED.
C: LOCATIONS IN SILL OTHER THAN AS LISTED N.A.A.R.
10) C8 = CONCRETE SCREW AND W8 = WOOD SCREW

GENERAL NOTES

(1 to 13) See General Notes Drawing ...ng FLEX20100, Sheet 1 & 2.
(A) Milestone Series 1000 Sliding Glas... Glass Door is shown. Also applicable to Milestone Series 500 and 2000 Sliding Glass Door.
(B) Drawing applicable to Non-Impac... Impact Resistant Sliding Glass Doors glazed with fully tempered glass. See Note (V).
(C) Where "X" represents moving pan... panel and "O" represents fixed panel, approved configurations are as listed on the fastener installation chart on Sheet 2.
(D) Not all configurations listed on the... the fastener chart are shown on this drawing, however installation sections "A-A", "B-B" & Hook Strip Detail apply to installation of all approve... approved configurations.
(E) For pocket door configurations, us... use closest by-pass door size and configuration in the chart to the finished opening of the pocket door.
(F) Concrete screw edge distance mea... measured from edge of concrete/masonry/block to centerline of concrete screw must meet or exceed 2 1/4". Minimum size and embedment pe... per Parts List. See Note (J) regarding deviations.
(G) Wood or tapping screw edge distan... distance measured from edge of wood receiving the point to centerline of wood or tapping screw must meet or exceed 1". Minimum size and ... embedment per Parts List. See Note (J) regarding deviations.
(H) All field supplied holes in the fram... frame (if required) will be 3/16" in diameter.
(I) Wood screw withdrawal values us... used to generate the fastening requirements are based on Southern Pine with a Specific Gravity of 0.55. See Note (J) regarding deviations.
(J) Any deviation less than the minim... minimum requirements stated must be approved by the manufacturer or engineered by "other" Design Professional in accordance with th... the applicable Building Code and Product Approval.

FASTENER INSTALLATION INSTRU... RUCTIONS - FLEX24111

3/16" DIA. CONCRETE SCREW WI... WITH SILL:

(K) Where door is installed in an open... opening with a masonry or concrete sill, use a 3/16" diameter concrete screw of sufficient length to achieve minimum embedment of 1-1/4" in... into masonry or concrete. See "Parts List" on Sheet 1 of this drawing for concrete screw size, embedment and load requirements. See FLEX20100, Note 7 for additional concrete screw requirements.
(L) See fastener installation chart this ... this sheet for concrete screw quantities and additional installation requirements.
(M) Install one concrete screw in each... each pair of factory applied installation holes unless noted otherwise on the fastener installation chart.
(N) Alternate concrete screw installati... ation fasteners front to back in all frame members when both sets of holes are not used.
(O) All remaining factory applied insta... installation fastener holes in the sill not used for concrete screw installation shall be anchored with plastic anchors (see FLEX20100, Note 8.) ... (See Parts List for details) and #8 wood screws of sufficient length to provide min. 7/8" in. embedment into the concrete or masonry. See "Parts L... Parts List" on Sheet 1 of this drawing for wood screw size and embedment requirements. See FLEX20100, Note 8 for additional wood screw requir... requirements.

#8 WOOD SCREW WITH STRUCTU... TURAL TWO BY WOOD BUCK FOR HEAD, JAMBS AND POCKET DOOR HOOK STRIP:

(P) Where the head, jambs and pocke... pocket door hook strip is installed in a wood opening with a structural two by wood buck and/or framing, use #8 wood screws of sufficient lengt... length to achieve 1-1/8" minimum embedment into the two by wood buck and/or framing receiving the point. See "Parts List" on Sheet 1 of this ... this drawing for wood screw size and embedment requirements. See FLEX20100, Note 8 for additional wood screw requirements.
(Q) See fastener installation chart this... this sheet for #8 wood screw requirements in hook strip.
(R) All remaining factory applied insta... installation fastener holes in the head and jamb(s) not used for #8 wood screw with 1-1/8" embedment shall be fastened with #8 wood screws ... screws of sufficient length to provide min. 5/8" embedment into wood buck. See "Parts List" on Sheet 1 of this drawing for wood screw size and ... and embedment requirements. See FLEX20100, Note 8 for additional wood screw requirements.
(S) Wood screws shall not be used to ... to fasten assembly into end grain of wood.

DESIGN PRESSURE RATING & FBC... IC CODE COMPLIANCE

(T) If exact door size is not listed in t... the fastener installation chart, use fastener quantity listed for next larger size, for the appropriate design pressure required.
(U) Installations depicted in these in... Instructions acceptable for design pressures to 70 PSF for the window sizes shown in the chart. Design Pressures (D.P.) are positive and ... and negative. Overall window assembly design pressure may be less than that shown in the fastener quantity table and shall be determ... determined in accordance with Note 13 of FLEX20100.
(V) Production Glazing may differ fro... from that tested as allowed by ANSI/AAMA/NWWDA 101/I.S. 2 - 97 or 101/I.S. 2 NAFS and applicable Building Code. See Note 12 and ... 13 on Drawing FLEX 20100 for further details.
(W) Two by wood and/or framing to b... be securely fastened to transfer the load to the masonry, concrete or other structural substrate per the FBC and the engineer of record's ... record's details as applicable.
(X) See FLEX20100, Notes 10 to 15 ... 15 for additional FBC Code Compliance.

Florida Extruders Int'l, Inc. 2540 Jewett Lane - Sanford, FL 32771 407-323-3300 - 407-322-3307 (fax) www.florideaextruders.com Florida COA No. 9235

TITLE: Milestone Series 500, 1000 & 2000 Non-Impact Resistant Aluminum Window & Patio Sliding Glass Door Installation Drawing for Concrete Sill Condition w/ Plastic Anchors & Wood Screws

No.	Date	Description	Designed
0	12/27/05	Sanford Release	

Date: 12/27/05
Scale: NTS
Drawn By: RJA
Checked By: JH

Drawing No. FLEX24111
Sheet 2 of 2

REVISIONS :

Maronda Homes
4005 MARONDA WAY SANFORD, FLORIDA
(407) 321-0064

FLORIDA EXTRUDERS
WINDOWS IN BLOCK
RELEASE DATE:

SHEET: 3 of 3

General Notes Drawing for Milestone Series 500, 1000, 1500, 1750, 2000 and 3000 Non-Impact Resisht Aluminum Window and Patio Sliding Glass Door Installation Details

These notes are provided to ensure proper installation of Florida Extruders Milestone Non-Impact Resistant Aluminum Fenestration Products and must be followed fully. This General Notes drawing shall be used in tandem with the product specific installation dwg.

A) General Assembly Installation Instructions

1) SHIMMING:
a. FLANGE FRAME WINDOWS - Shim as required at each installation fastener with load bearing shim. The maximum allowable shim stack to be 1/4".
b. FIN FRAME WINDOWS - Shim as required at each installation fastener with load bearing shim. The maximum allowable shim stack to be 1/4". Apply a bead of Vulkem 116 adhesive caulk or approved equal at the fastener location prior to inserting the shim to adhere the shim to the substrate and/or window frame. Full bedding between the shim, substrate and window frame are required.
i. In the case where the nailing option is employed with fin/nail windows, shims can be limited to the location spacing where wood screws are required. It is not imperative that the shims be coincident with the nail.
c. SLIDING GLASS DOORS - Shim as required at each installation fastener with load bearing shim. The maximum allowable shim stack to be 1/4". Load bearing shim at sill must be pressure treated wood or plastic and must be completely encapsulated in caulking or set in wet concrete.

2) SEALING (CAULKING) BETWEEN FENESTRATION PRODUCT AND SUBSTRATE & SGD SEAM SEALANT (See Disclaimer Statement above):
a. GENERAL - SEALANT TYPE (not applicable when a specific brand or type is required)
i. Sealant type should be chosen based on the sealant manufacturer's recommendation as it relates to materials to be sealed, environmental conditions and intended use.
b. WINDOWS - FLANGE FRAME
i. Adhesive Seal - REQUIRED
1. Use Vulkem 116 adhesive caulk or approved equal between window's integral mounting fin and pre-cast concrete sill (or other sill construction) along full length of sill.
2. Application of Vulkem 116 adhesive caulk or approved equal must comply with sealant manufacturer's recommendations.
ii. Caulking - RECOMMENDED (see Disclaimer)
1. Use sealant behind window flange at head and jambs.
2. Use sealant for perimeter seal around exterior of flange window mounting fin and at head heads of installation fasteners.
c. WINDOWS - FIN FRAME
i. Adhesive Seal - NOT REQUIRED
ii. Caulking - RECOMMENDED (see Disclaimer)
1. Use sealant behind window flange at head, sill and jambs.
2. Use sealant for perimeter seal around exterior of flange window mounting fin and at head heads of installation fasteners.
d. SLIDING GLASS DOORS
i. Adhesive Seal - NOT REQUIRED
ii. Mechanically Fastened Corners - REQUIRED
1. Sliding Glass Doors manufactured in "Knockout-Dowsnap" conditions shall have jamb and sill corners sealed with a small joint seam sealant.
iii. Caulking - RECOMMENDED (see Disclaimer)
1. Use sealant behind door flange at head & jambs and behind hook strip.
2. Liberally apply sealant under sill or sill sill in bed of wet concrete. Caulk between back corner of sill mate and concrete. Caulk all fastener holes prior to installing fastener and around head after installation.
3. Use sealant for perimeter seal around exterior of door and between hook strip & buck for pocket doors and to seal heads of installation fasteners.

3) MATERIALS:
a. Window and sliding glass door frame material is Aluminum Alloy 6063 T6.
b. Concrete Screws shall meet the minimum requirements of Note 7.
c. Wood Screws shall meet the requirements of Note 8.
d. Tapping (i.e., Sheet Metal) Screws when used in lieu of Wood Screws shall meet the requirements of Note 8.
e. Nails shall meet the requirements of Note 9.
f. Corrosive Resistance Coatings for installation fasteners shall meet the requirements of Note 5.
g. Concrete block or concrete masonry units (CMU) shall meet the requirements of ASTM C90.
h. Concrete shall meet the minimum requirements of the Florida Building Code (minimum compressive strength of 2500 psi).

4) BUCKING:
a. One by (1x) wood buckings
i. Applies to all non-structural bucks less than 1 1/2" thickness. Not intended to limit to nominal one by wood buck only.
ii. One by wood backing shall be secured to the substrate (masonry, concrete or structural wood backing or framing using fasteners suitable for the application.
1. If the product specific installation drawing does prescribe fastening requirements for the backing, they shall be followed.
2. If the product specific installation drawing does not prescribe fastening requirements for the backing, fastening must only be sufficient to maintain position of the backing during window installation.
a. Installer, builder or design professional of record may specify method to secure one by wood backing to substrate to facilitat window installation.
b. Two by (2x) wood backing or framing:
i. Applies to all structural wood backs and/or framing at the head, jamb or sill equal to and greater than 1 1/2" thickness.
ii. They shall be securely fastened to transfer the load to the masonry, concrete o other structural substrate per 2001 FBC, Section 1707.4.4, 2004 FBC-Building, Section 1717.5.4 and 2004 FBC-Residential, Section R613.5 and/or the engineer of record's details as applicable.

B) General Fastener Installation Instructions

5) All installation fasteners must be made of corrosion resistant materials or have a corrosion resistant coating applied suitable for the environment and/or framing materials. Where fasteners are used in pressure-preservative treated wood, the wood supplier shall be consulted for recommendation of fasteners compatible with the pressure-preservative treatment process used.

6) All field supplied holes in the frame (if required) will be as follows.
a. 3/32" diameter for all #8 wood or tapping screws.
b. 3/16" in diameter for all #10 wood or tapping screws and 3/16" diameter concrete screws.
c. No. 29 size drill bit for 0.134" shank diameter nails.
d. No. 33 size drill bit for 0.113" shank diameter nails.

7) Concrete Screws (For attachment to masonry or concrete substrate.)
a. Shall be "Flat" head unless otherwise indicated.
b. Shall have a minimum nominal diameter of 3/16".
c. Shall have a minimum embedment of 1 1/4" into the concrete, masonry or concrete block or masonry unit (CMU) receiving the point.
d. Shall have an allowable working load in shear as noted on the "Parts List" on the produc specific installation drawing.
i. Working load is defined as the ultimate load determined by test divided by 4 as generated and published by the concrete screw's manufacture.
ii. If the allowable shear load exceeds the above minimum, required number of fasteners shown on the installation drawings CANNOT be decreased.
iii. If the allowable shear load is less than the above minimum, additional site engineering analysis meeting the building code and acceptable to the Authority Having Jurisdiction (AHJ) WILL BE required.
e. Concrete screw shall be of sufficient length so that the minimum embedment into the receiving substrate (member receiving the point) is met.
f. Minimum Edge Distance of concrete screw fasteners shall be 2 1/4" from the edge of the substrate.

8) Wood Screws and Tapping (Sheet Metal) Screws (for installation of window or door frame in wood buck or framing substrate)
a. Wood Screws & Tapping Screw shall be "Flat" head when used with flange frame windows.
b. Wood Screws & Tapping Screw shall be "Pan" head when used with fin frame windows.
c. Wood Screws shall meet ANSI B18.6.1 dimensional requirements.
d. Tapping Screws shall meet ANSI B18.6.4 dimensional requirements.
e. Diameter and embedment shall be as indicated on the installation drawing.
f. If wood tends to split, pre-bore holes as follows (National Design Specification for Wood Construction).
i. No. 8 wood screw - 1/8" diameter pilot hole.
ii. No. 10 wood screw - 3/16" diameter pilot hole.
g. Wood Screws & Tapping Screw shall be of sufficient length so that the minimum embedment into the receiving substrate (member receiving the point) is met.
h. Wood Screws & Tapping Screw shall not be used for fastening into the end grain of wood.
i. Wood Screw & Tapping Screw allowable lateral and withdrawal loads used to generate fastening requirements are based on a specific gravity of 0.42 for spruce-pine-fir (SPF) unless otherwise noted.
j. Wood Screw w/Plastic Inserts (Sliding Glass Door Sill Installation ONLY). Factory applied installation fastener holes in the sill not used for concrete screw installation shall be anchored with plastic anchors and wood screws meeting the following requirements.
i. No. 10 Wood Screws where used:
1. Shall be of sufficient length to provide min. 1 in. embedment into the concrete or masonry.
2. Anchors shall be of a type similar to those depicted below with allowable shear loads greater than or equal to 207 lbs ultimate and 74 lbs working (ultimate/4).
ii. No. 8 Wood Screws where used:
1. shall be of sufficient length to provide min. 7/8 in. embedment into the concrete or masonry.
2. Anchors shall be of a type similar to those depicted below with allowable shear loads greater than or equal to 246 lbs ultimate and 61 lbs working (ultimate/4).

9) Nails (for installation of window or door frame in wood buck or framing substrate)
a. Nails shall meet the minimum requirements of the product specific installation drawings for the following characteristics.
i. Shank Diameter
ii. Head Diameter
1. Round Head Only for window installation.
2. As specified on the product specific installation drawing for Only By Backing installation if applicable.
b. Nails shall meet the dimensional requirements of ASTM F1667, "Standard Specification of Driven Fasteners: Nails, Spikes and Staples."
c. Nails listed in one of the following Evaluation Reports (ICC-ES, see www.icc-es.org)) are preferred. However, if the minimum shank and head diameters are maintained, this is not mandatory.
i. NER-272
ii. ESR-1539
iii. Nail manufacturer's published Evaluation Report.
d. Nails should be used for fastening into the end grain of wood.
e. Nail allowable lateral and withdrawal loads used to generate fastening requirements are based on a specific gravity of 0.42 for spruce-pine-fir (SPF) unless otherwise noted.
f. If wood tends to split, pre-bore holes as follows (National Design Specification for Wood Construction).
i. 0.113" dia. nails - 1/64 dia. pilot hole.
ii. Other nail diameter pilot holes not exceeding 75% of the nail's diameter as required.

C) Fenestration Assembly Design Pressure Ratings & FBC Code Compliance

10) The buyer shall order windows and patio doors that will meet the project's specific requirements based on the builder's information, Milestone product specifications, The Florida Building Code, and the codes or code amendments administered by local building departments. To assure compliance with the building code, the buyer must know the structural requirements with regards to positive and negative design pressures, water requirements, and egress. Documentation provided by Florida Extruders for its Milestone brand fenestration products includes test reports, installation details, and ASTM glass charts.

11) The Milestone Series 500, 1000, 1500, 1750, 2000 and 3000 Non-Impact Resistant Aluminum Window and Patio Sliding Glass Doors installation instructions comply with the following:
a. 2001 FBC, Chapter 17 Sections 1707.4.4.1 for anchoring requirements, 1707.4.4.2 for masonry, concrete or other structural substrates and 1707.4.4.3 for wood or approved framing members.
b. 2004 FBC-Building, Chapter 17 Sections 1714.3.4.1 for anchoring requirements, 1714.5.4.2 for masonry, concrete or other structural substrates and 1714.5.4.3 for wood or approved framing members.
c. 2004 FBC-Residential, Chapter 6 Sections R613.6.1 for anchoring requirements, R613.6.2 for masonry, concrete or other structural substrates and R613.6.3 for wood or approved framing members.

12) Milestone Series 500, 1000, 1500, 1750, 2000 and 3000 Non-Impact Resistant Aluminum Windows and Patio Sliding Glass Doors are tested and labeled in accordance with the following.
a. Design Pressure (Performance Rating) tested in accordance with the following. A permanent label is placed on the frame meeting the requirements of the following.
i. 2001 FBC Section 1707.4.2.1,
ii. 2004 FBC-Building Section 1714.5.2.1, and
iii. 2004 FBC-Residential Section R613.3.1.
b. Applied Loads and Glazing Wind Load Resistance in accordance with the following.
i. 2001 FBC Section 2403.2,
ii. 2004 FBC-Building Section 1714.5.2.1 & 2404.1,
iii. 2004 FBC-Residential Section R613.3.2 & R613.3.4, and ASTM E1300.
c. A non-permanent label is placed on each light of the window or door designating the type and thickness of the glazing meeting the requirements of the following.
i. 2001 FBC, Section 2403.1,
ii. 2004 FBC-Building, Section 2403.1, and
iii. 2004 FBC-Residential, Section R308.1.

13) Overall Performance Rating for fenestration assembly.
a. The overall assembly Performance Rating shall be based on the lower of following.
i. Test report design pressure based on the lower of the structural, air infiltration and water penetration testing in the positive and negative directions and recorded on the permanent label and/or test report.
ii. Glass load resistance from ASTM E-1300 recorded on the non-permanent label.
b. Glass thickness may be greater than the test specimen per the requirements of ASTM E1300 in meeting applied wind loading per Note 12.b above.
i. In accordance with ANSI/AAMA/NWWDA 101/I.S. 2 - 97, Section 3.6, the buyer, at order entry, shall specify a glass type and thickness that meets and/or exceeds the design pressure requirements of the project.
ii. The glass type and thickness specified by the buyer will not be less than that used with the test specimen.

14) The windows shall not be installed in areas where the applied transverse wind loads exceed the allowable design pressure based on 13.a above.

15) Limitations of Use
a. The windows shall be installed in accordance with the Manufacturer's Installation Drawings.
b. Fastener Size, Type and Spacing are determined by the type of construction per the Manufacturer's Installation Drawings.
c. The windows and patio doors shall not be installed in areas where the applied transverse wind loads exceed the allowable design pressure based on the following (see Note 13).
i. test report design pressure and/or
ii. glass load resistance determined from ASTM E-1300.
d. MILESTONE Series 500, 1000, 1500, 1750, 2000 and 3000 Non-Impact Resistant Aluminum Windows and Patio Sliding Glass Doors have not been evaluated for use in High Velocity Hurricane Zones (Broward and Dade Counties) or in Wind-Borne Debris Regions as defined in the 2001 Florida Building Code, 2004 Florida Building Code-Building and 2004 Florida Building Code-Residential and shall not be used in the HVHZ.
e. MILESTONE Series 500, 1000, 1500, 1750, 2000 and 3000 Non-Impact Resistant Aluminum Windows and Patio Sliding Glass Doors may be used in Wind-Borne Debris Regions as defined in the 2001 Florida Building Code, 2004 Florida Building Code-Building and 2004 Florida Building Code-Residential that lie outside the High Velocity Hurricane Zones (Broward and Dade counties) if a Florida Building Code approved shutter assembly is employed to protect the windows in accordance with applicable FBC Code Sections.

DISCLAIMER
The purpose of this installation drawing is to present the manufacturer's recommendations for anchorage (i.e., concrete screws, wood screws, tapping screws, nails and Vulkem Structural Adhesive (or other approved equal)) to achieve the design pressure specified on the fenestration product as required by the 2001 Florida Building Code (FBC), Section 1707.4.4, 2004 FBC-Building, Section 1714.5.4 and the 2004 FBC-Residential, Section R613.5. Recommendations regarding flashing, sealing, sealants or other joint sealant practices does not constitute a warranty either expressed or implied.

NOTE ON FE SEALING
Original drawings with two sheets (pages) are reproduced on one sheet front and back. When reproduced this way, they are sealed on the first (front) sheet only. In response to Robert Amoruso's inquiry to the Florida Board of Professional Engineers, the FBPE at their meeting on June 20, 2002 responded that in such circumstances, it is acceptable for the sealing PE to only sign, date and seal the front sheet of the drawing when printed on the front and back. This was documented by letter to Robert Amoruso dated July 31, 2002 from the Office of the Attorney General, State of Florida.

Robert J. Amoruso, P.E.
FL License No. 49752

Florida Extruders Int'l, Inc. 2540 Jewett Lane - Sanford, FL 32771 407-323-3300 - 407-322-3307 (fax) www.floridaextruders.com Florida COA No. 9235

TITLE: General Notes Drawing for Milestone Series 500, 1000, 1500, 1750, 2000 & 3000 Non-Impact Resistant Aluminum Windows & Patio Sliding Glass Doors Installation Details

No.	Date	Description	Designed
0	6/7/04	RJA	Original Issue.
1	10/24/05	RJA	Editorial Changes.
2	12/27/05	RJA	Sanford Release. Revised Notes 1, 6, 9 & 12.

Date: 12/27/05
Scale: NTS
Drawn By: RJA
Checked By: JH

Drawing No. FLEX20100
Sheet 1 of 2

General Notes Drawing for Milestone Series 500, 1000, 1500, 1750, 2000 a... and 3000 Non-Impact Resistant Aluminum Window and Patio Sliding Glass Door Installa... liation Details

Florida Extruders Int'l, Inc. 2540 Jewett Lane - Sanford, FL 32771 407-323-3300 - 407-322-3307 (fax) www.floridaextruders.com Florida COA No. 9235

TITLE: General Notes Drawing for Milestone Series 500, 1000, 1500, 1750, 2000 & 3000 Non-Impact Resistant Aluminum Windows & Patio Sliding Glass Doors Installation Details

No.	Date	Description	Designed
0	6/7/04	RJA	Original Issue.
1	10/24/05	RJA	Editorial Changes.
2	12/27/05	RJA	Sanford Release. Revised Notes 1, 6, 9 & 12.

Date: 12/27/05
Scale: NTS
Drawn By: RJA
Checked By: JH

Drawing No. FLEX20100
Sheet 2 of 2

...\title_blocks\18x24-1252d.dgn Mar. 31, 2006 13:32:09

9 MAR 2006

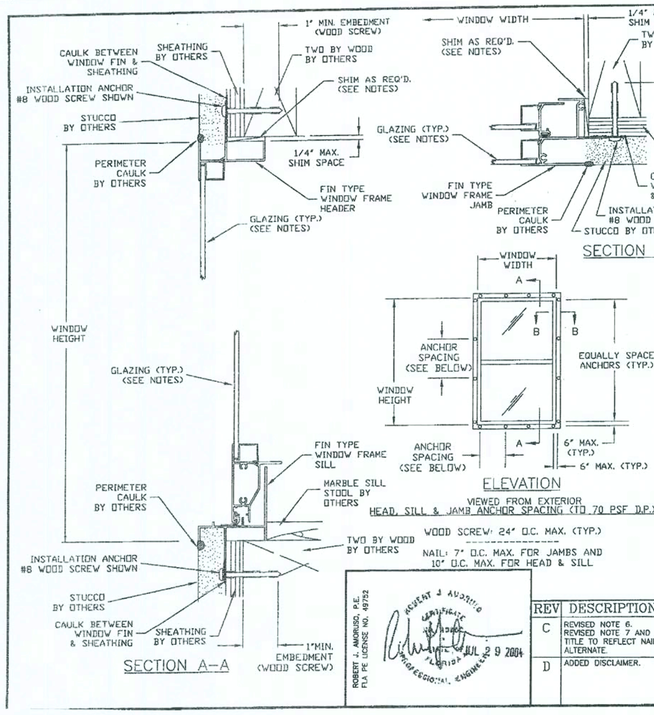

Disclaimer: purpose of this installation drawing is to present the manufacturer's recommendations for anchorage (i.e.ed screws and nails) to achieve the design pressure specified on the fenestration product as required by the Building Code, Section 1707.4.4, Anchorage Methods. Recommendations regarding flashing, sealants or other joint sealant practices does not constitute a warranty either expressed or implied.

IMPORTNT INFORMATION & GENERAL NOTES

These notes provided to ensure proper installation of Florida Extruders Milestone products anust be followed fully.

GENERAL INLLATION INSTRUCTIONS

1) SHIM AS 'D. AT EACH INSTALLATION ANCHOR WITH LOAD BEARING SHIM. MAX. ALLOWLE SHIM STACK TO BE 1/4". APPLY A BEAD OF VULKEM 116 ADHESIVE (LK OR APPROVED EQUAL AT THE FASTENER LOCATION PRIOR TO INSERTING E SHIM TO ADHERE THE SHIM TO THE SURSTRATE AND/OR WINDOW FRE. FULL BEARING BETWEEN THE SHIM, SUBSTRATE AND WINDOW FRAME ARE QUIRED.
2) USE SILIKIZED ACRYLIC CAULK BEHIND WINDOW FIN AT HEAD, SILL & JAMBS.
3) USE SILIKIZED ACRYLIC CAULK FOR PERIMETER SEAL AROUND EXTERIOR OF WINDOW FRE.
4) FLORIDATRUDERS 1000 SERIES SINGLE HUNG IS SHOWN. THIS PRINT ALSO APPLIES TOE FLORIDA EXTRUDERS 1500 AND 2000 SERIES SINGLE HUNGS.
5) WINDOWAME MATERIAL: ALUMINUM ALLOY 6063.

ANCHOR INSTALLATION INSTRIONS

GENERAL:

6) ALL INSTALLATION ANCHORUST BE MADE OF CORROSION RESISTANT MATERIALS OR HAVE A CORROSION RESISTANT COATIAPPLIED SUITABLE FOR THE ENVIRONMENT AND/OR FRAMING MATERIAL. WHERE ANCHORS AUSED IN PRESSURE-PRESERVATIVE TREATED WOOD, THE WOOD SUPPLIER SHALL BE CONSEIOR RECOMMENDATION OF ANCHORS COMPATIBLE WITH THE PRESSURE-PRESERVATIVE TREENT PROCESS USED.
7) ALL FIELD SUPPLIED HOLES THE FRAME (IF REQUIRED) WILL BE:
a) 3/16" IN DIAMETER FOR WOOD SCREWS, AND
b) THE SHANK DIAMETER ONE NAIL ROUNDED UP TO THE NEXT STANDARD DESIGNATION DRILL BIT E.
8) WOOD SCREWS SHALL MEETSI B18.6.1 DIMENSIONAL REQUIREMENTS.
9) NAILS SHALL MEET ASTM F F, "STANDARD SPECIFICATION FOR DRIVEN FASTENERS: NAILS, SPIKES, AND STAPLES."
10) IF WOOD TENDS TO SPLIT, E-BORE HOLE AS FOLLOWS (PER NATIONAL DESIGN SPECIFICATION FOR WOOD CONSTRUCTION REIREMENTS):
a) #8 WOOD SCREWS - 1/8"A. PILOT HOLE.
b) 0.113" DIA. NAILS - #44 LL SIZE PILOT HOLE
c) OTHER NAIL DIAMETER PT HOLES NOT EXCEEDING 75% OF THE NAIL'S DIAMETER AS REQUIRED.
11) WOOD SCREW AND NAIL WDRAWAL VALUES USED TO GENERATE FASTENING REQUIREMENTS ARE BASED ON SOUTHERN PINITH A SPECIFIC GRAVITY OF 0.55.
12) WOOD SCREWS AND NAILS ALL NOT BE MIXED TO FASTEN THE SAME ASSEMBLY.
13) WOOD SCREWS AND NAILS ALL NOT BE USED TO FASTEN ASSEMBLY INTO THE END GRAIN OF WOOD.

[SEE SHEET 2 FOR CONTINUATI OF NOTES]

ROBERT J. ANDRUSO, P.E. FLA PE LICENSE NO. 49752

REV	DESCRIPTION	DATE	INI
C	REVISED NOTE 6. REVISED NOTE 7 AND TITLE TO REFLECT NAIL ALTERNATE.	12/10/03	RJA
D	ADDED DISCLAIMER.	7/29/04	RJA

FLOR)A EXTRUDERS INTERNATIONAL, INC. 2540 JEWETT LANE SANFORD, FLORIDA
CERTIFICATE OFTHORIZATION NO. 9235
TITLE: INSLLATION DETAIL W/#8 SCREWS OR NAILS
SINGLHUNG FIN WINDOW - SERIES 1000, 1500, & 2000
DRAWN BYB APPROVED BY: RJA
DATE: 7/294 SCALE: N. T. S. DWG.:FLEX0026 SHT 1 OF 2

#8 WOOD SCREW INSTALLATION ANCHOR CHART			
CALL SIZE	WINDOW SIZE	QUANTITY IN HEAD & SILL UP TO 70 PSF	QUANTITY IN EACH JAMB UP TO 70 PSF
2024	23 1/2 X 27 1/2	2	2
2030	23 1/2 X 35 1/2	2	2
2038	23 1/2 X 43 1/2	2	3
2040	23 1/2 X 47 1/2	2	3
2044	23 1/2 X 51 1/2	2	3
2050	23 1/2 X 59 1/2	2	4
2060	23 1/2 X 71 1/2	2	4
2070	23 1/2 X 83 1/2	2	4
2424	27 1/2 X 27 1/2	2	2
2430	27 1/2 X 35 1/2	2	2
2438	27 1/2 X 43 1/2	2	3
2440	27 1/2 X 47 1/2	2	3
2444	27 1/2 X 51 1/2	2	3
2450	27 1/2 X 59 1/2	2	4
2460	27 1/2 X 71 1/2	2	4
2470	27 1/2 X 83 1/2	2	4
2824	31 1/2 X 27 1/2	2	2
2830	31 1/2 X 35 1/2	2	2
2838	31 1/2 X 43 1/2	2	3
2840	31 1/2 X 47 1/2	2	3
2844	31 1/2 X 51 1/2	2	3
2850	31 1/2 X 59 1/2	2	4
2860	31 1/2 X 71 1/2	2	4
2870	31 1/2 X 83 1/2	2	4
3024	35 1/2 X 27 1/2	2	2
3030	35 1/2 X 35 1/2	2	2
3038	35 1/2 X 43 1/2	2	3
3040	35 1/2 X 47 1/2	2	3
3044	35 1/2 X 51 1/2	2	3
3050	35 1/2 X 59 1/2	2	4
3060	35 1/2 X 71 1/2	2	4
3070	35 1/2 X 83 1/2	2	4
3424	39 1/2 X 27 1/2	3	2
3430	39 1/2 X 35 1/2	3	2
3438	39 1/2 X 43 1/2	3	3
3440	39 1/2 X 47 1/2	3	3
3444	39 1/2 X 51 1/2	3	3
3450	39 1/2 X 59 1/2	3	3
3460	39 1/2 X 71 1/2	3	4
3470	39 1/2 X 83 1/2	3	4
3824	43 1/2 X 27 1/2	3	2
3830	43 1/2 X 35 1/2	3	2
3838	43 1/2 X 43 1/2	3	3
3840	43 1/2 X 47 1/2	3	3
3844	43 1/2 X 51 1/2	3	3
3850	43 1/2 X 59 1/2	3	3
3860	43 1/2 X 71 1/2	3	4
3870	43 1/2 X 83 1/2	3	4
4024	47 1/2 X 27 1/2	3	2
4030	47 1/2 X 35 1/2	3	2
4038	47 1/2 X 43 1/2	3	3
4040	47 1/2 X 47 1/2	3	3
4044	47 1/2 X 51 1/2	3	3
4050	47 1/2 X 59 1/2	3	3
4060	47 1/2 X 71 1/2	3	4
4070	47 1/2 X 83 1/2	3	4

#8 WOOD SCREW INSTALLATION ANCHOR CHART			
CALL SIZE	WINDOW SIZE	QUANTITY IN HEAD & SILL UP TO 70 PSF	QUANTITY IN EACH JAMB UP TO 70 PSF
12	18 1/8 X 25	2	2
13	18 1/8 X 37 3/8	2	3
14	18 1/8 X 49 5/8	2	3
145	18 1/8 X 55 1/4	2	3
15	18 1/8 X 62	2	4
16	18 1/8 X 71	2	4
17	18 1/8 X 83	2	4
1H2	25 1/2 X 25	2	2
1H3	25 1/2 X 37 3/8	2	3
1H4	25 1/2 X 49 5/8	2	3
1H45	25 1/2 X 55 1/4	2	3
1H5	25 1/2 X 62	2	4
1H6	25 1/2 X 71	2	4
1H7	25 1/2 X 83	2	4
30 1/2 X 26	29 1/2 X 25	2	2
30 1/2 X 38 3/8	29 1/2 X 37 3/8	2	3
30 1/2 X 50 5/8	29 1/2 X 49 5/8	2	3
30 1/2 X 56 1/4	29 1/2 X 55 1/4	2	3
30 1/2 X 63	29 1/2 X 62	2	4
30 1/2 X 72	29 1/2 X 71	2	4
30 1/2 X 84	29 1/2 X 83	2	4
22	36 X 25	2	2
23	36 X 37 3/8	2	3
24	36 X 48 5/8	2	3
245	36 X 55 1/4	2	3
25	36 X 62	2	4
26	36 X 71	2	4
27	36 X 83	2	4
42 X 26	41 X 25	3	2
42 X 38 3/8	41 X 37 3/8	3	3
42 X 50 5/8	41 X 49 5/8	3	3
42 X 56 1/4	41 X 55 1/4	3	3
42 X 63	41 X 62	3	4
42 X 72	41 X 71	3	4
42 X 84	41 X 83	3	4
48 X 26	47 X 25	3	2
48 X 38 3/8	47 X 37 3/8	3	3
48 X 50 5/8	47 X 49 5/8	3	3
48 X 56 1/4	47 X 55 1/4	3	3
48 X 63	47 X 62	3	4
48 X 72	47 X 71	3	4
48 X 84	47 X 83	3	4
32	52 1/8 X 25	3	2
33	52 1/8 X 37 3/8	3	3
34	52 1/8 X 49 5/8	3	3
345	52 1/8 X 55 1/4	3	3
35	52 1/8 X 62	3	4
36	52 1/8 X 71	3	4
* 37	52 1/8 X 83	3	4

* 37 SIZE NOT AVAILABLE IN 1000 OR 1500 SERIES

IMPORTANT INFORMATION & GENERAL NOTES (cont.)

ANCHOR INSTALLATION INSTRUCTIONS (cont.)

#8 WOOD SCREWS:

14) SEE THIS SHEET FOR #8 WOOD SCREW INSTALLATION ANCHOR CHART.
15) #8 WOOD SCREW MUST BE OF SUFFICIENT LENGTH TO ACHIEVE MINIMUM EMBEDMENT OF 1" INTO THE TWO BY WOOD FRAMING.
16) SPACING OF WOOD SCREWS SHALL BE:
a) 6" FROM EACH CORNER OF THE HEAD, SILL AND JAMBS, AND
b) EVENLY SPACED BETWEEN CORNER ANCHORS BUT NOT EXCEEDING 24" O.C. SPACING IN HEAD, SILL AND JAMBS.

NAILS:

17) NAILS SHALL MEET THE FOLLOWING REQUIREMENTS:
a) 0.113" DIAMETER OR GREATER,
b) SUFFICIENT LENGTH TO ACHIEVE MINIMUM EMBEDMENT OF 1 7/8" INTO THE TWO BY WOOD FRAMING (GENERALLY, NAIL 2 3/8" LENGTH OR GREATER SHALL MEET THIS REQUIREMENT),
c) HELICAL (SCREW) OR ANNULAR (RING) SHANK STYLE ONLY, AND
d) MANUFACTURER SHALL BE LISTED IN NATIONAL EVALUATION SERVICES, INC.'S NATIONAL EVALUATION REPORT, NER-272.
18) MANUFACTURER'S NAILS MEETING THESE REQUIREMENTS ARE (BUT NOT LIMITED TO) THE FOLLOWING:
a) PASLODE DEFORMED SHANK NAIL, NO. 404947, 404537, 650111 AND 650148.
b) DURO-FAST DEFORMED SHANK NAIL NO. 325.
19) SPACING OF NAILS SHALL BE:
a) 6" FROM EACH CORNER OF THE HEAD, SILL AND JAMBS, AND
b) EVENLY SPACED BETWEEN CORNER ANCHORS AND NOT EXCEEDING 7" O.C. SPACING FOR THE JAMBS AND 10" O.C. SPACING FOR THE HEAD AND SILL.

DESIGN PRESSURE RATING & FBC REQUIREMENTS

20) IF EXACT WINDOW SIZE IS NOT LISTED IN WOOD SCREW ANCHOR CHART, USE ANCHOR QUANTITY LISTED FOR NEXT LARGER SIZE.
21) INSTALLATIONS DEPICTED IN THESE INSTRUCTIONS ACCEPTABLE FOR DESIGN PRESSURES TO 70 PSF FOR WINDOW SIZES SHOWN IN CHART WITH SPACINGS SHOWN. DESIGN PRESSURES (D.P.) SHOWN ARE POSITIVE AND NEGATIVE.
22) GLASS THICKNESS MAY VARY PER THE REQUIREMENTS OF ASTM E1300 GLASS CHARTS.
23) COMPLIES WITH CHAPTER 17 SECTIONS 1707.4.4.1 FOR ANCHORING REQUIREMENTS AND 1707.4.4.3 FOR WOOD OR APPROVED FRAMING MEMBERS, MARCH 1,2002.

REV	
A	FLORIDA EXTRUDERS INTERNATIONAL, INC. 2540 JEWETT LANE SANFORD, FLORIDA
B	CERTIFICATE OF AUTHORIZATION NO. 9235
C	TITLE: INSTALLATION DETAIL W/#8 SCREWS OR NAILS
D	SINGLE HUNG FIN WINDOW - SERIES 1000, 1500, & 2000
	DRAWN BY: BB APPROVED BY: RJA
	DATE: 7/29/04 SCALE: NTS DWG.: FLEX0026 SHT 2 OF 2

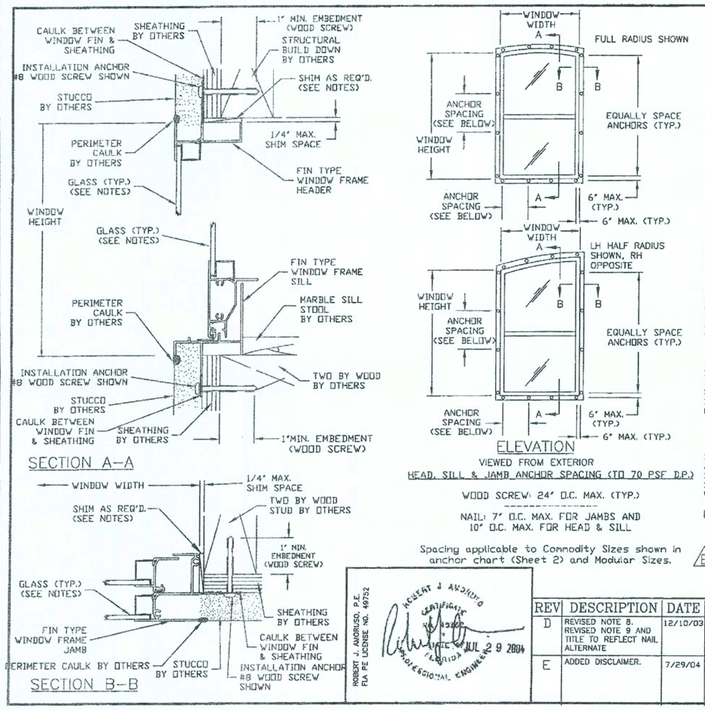

Spacing applicable to Commodity Sizes shown in anchor chart (Sheet 2) and Modular Sizes.

IMPORTANT INFORMATION & GENERAL NOTES

These notes are provideensure proper installation of Florida Extruders Milestone products and must be followed fully.

GENERAL INSTALLATIONTRUCTIONS

1) SHIM AS REQ'D. AT EANSTALLATION ANCHOR WITH LOAD BEARING SHIM. MAX. ALLOWABLE SHIM STACK TO BE 1/4".TY A BEAD OF VULKEM 116 ADHESIVE CAULK OR APPROVED EQUAL AT THE FASTENER LOCATIORIOR TO INSERTING THE SHIM TO ADHERE THE SHIM TO THE SUBSTRATE AND/OR WINDOW FRAMULL BEARING BETWEEN THE SHIM, SUBSTRATE AND WINDOW FRAME ARE REQUIRED.
2) USE SILICONIZED ACRC CAULK BEHIND WINDOW FIN AT HEAD, SILL & JAMBS.
3) USE SILICONIZED ACRC CAULK FOR PERIMETER SEAL AROUND EXTERIOR OF WINDOW FRAME.
4) FLORIDA EXTRUDERS 3 SERIES SINGLE HUNG IS SHOWN. THIS PRINT ALSO APPLIES TO THE FLORIDA EXTRUDERS 1500 2000 SERIES SINGLE HUNGS.
5) WINDOW FRAME MATEL: ALUMINUM ALLOY 6063.
6) BUILD DOWN AROUNDRVED PORTION OF WINDOW FRAME TO BE ENGINEERED BY OTHERS. BUILD DOWN MUST BE SUFFICIENT STRENGTH TO ADEQUATELY TRANSFER LOAD FROM WINDOW TO THE STRUCTURE PBSC, SECTION 1707.4.4.
7) WINDOW UNIT CAN BUILLED TO OTHER UNITS USING ALUMINUM TUBE MULLION. SEE MULLION INSTALLATION SHEETS FREQUIREMENTS.

ANCHOR INSTALLATION IRUCTIONS

GENERAL:

8) ALL INSTALLATION ANCRS MUST BE MADE OF CORROSION RESISTANT MATERIALS OR HAVE A CORROSION RESISTANT CING APPLIED SUITABLE FOR THE ENVIRONMENT AND/OR FRAMING MATERIAL. WHERE ANCHORARE USED IN PRESSURE-PRESERVATIVE TREATED WOOD, THE WOOD SUPPLIER SHALL BE CONSED FOR RECOMMENDATION OF ANCHORS COMPATIBLE WITH THE PRESSURE-PRESERVATIVECATMENT PROCESS USED.
9) ALL FIELD SUPPLIED HO IN THE FRAME (IF REQUIRED) WILL BE:
a) 3/16" IN DIAMETER I #8 WOOD SCREWS, AND
b) THE SHANK DIAMETRF THE NAIL ROUNDED UP TO THE NEXT STANDARD DESIGNATION DRILL SIZE.
10) WOOD SCREWS SHALLET ANSI B18.6.1 DIMENSIONAL REQUIREMENTS.
11) NAILS SHALL MEET ASF 1667, "STANDARD SPECIFICATION FOR DRIVEN FASTENERS: NAILS, SPIKES, AND STAPLES."
12) IF WOOD TENDS TO SI, PRE-BORE HOLE AS FOLLOWS (PER NATIONAL DESIGN SPECIFICATION FOR WOOD CONSTRUCTICEQUIREMENTS):
a) #8 WOOD SCREWS 3" DIA. PILOT HOLE.
b) 0.113" DIA. NAILS - I DRILL SIZE PILOT HOLE.
c) OTHER NAIL DIAMETPILOT HOLES NOT EXCEEDING 75% OF THE NAIL'S DIAMETER AS REQUD.
13) WOOD SCREW AND NAVITHDRAWAL VALUES USED TO GENERATE FASTENING REQUIREMENTS ARE BASED ON SOUTHERNE WITH A SPECIFIC GRAVITY OF 0.55.
14) WOOD SCREWS AND NS SHALL NOT BE MIXED TO FASTEN THE SAME ASSEMBLY.
15) WOOD SCREWS AND NS SHALL NOT BE USED TO FASTEN ASSEMBLY INTO THE END GRAIN OF WOOD.

[SEE SHEET 2 FOR CONTINUATION OF NOTES]

Disclaimer: The purpose of this installation drawing is to present the manufacturer's recommendations fincharage (i.e., wood screws and nails) to achieve the design pressure specified on the fenestration product as required by Florida Building Code, Section 1707.4.4, Anchorage Methodsecommendations regarding flashing, sealing, sealants or other joint sealant practices doeat constitute a warranty either expressed or implied.

ROBERT J. ANDRUSO, P.E. FLA PE LICENSE NO. 49752

REV	DESCRIPTION	DATE	INI
D	REVISED NOTE 8. REVISED NOTE 9 AND TITLE TO REFLECT NAIL ALTERNATE	12/10/03	RJA
E	ADDED DISCLAIMER.	7/29/04	RJA

FLORIA EXTRUDERS INTERNATIONAL, INC. 2540 JEWETT LANE SANFORD, FLORIDA
CERTIFICATE OFTHORIZATION NO. 9235
TITLE: INSTALLATION DETAIL W/#8 SCREWS OR NAILS
SINGLE HU RADIUS HEAD FIN - SERIES 1000, 1500, & 2000
DRAWN BY3H APPROVED BY: RJA
DATE: 7/294 SCALE: N. T. S. DWG.:FLEX0041 SHEET 1 OF 2

#8 WOOD SCREW INSTALLATION ANCHOR CHART			
CALL SIZE	WINDOW SIZE	QUANTITY IN HEAD & SILL UP TO 70 PSF	QUANTITY IN EACH JAMB UP TO 70 PSF
12	18 1/8 X 27 5/16	2	3
13	18 1/8 X 39 11/16	2	3
14	18 1/8 X 51 15/16	2	3
145	18 1/8 X 57 19/32	2	3
15	18 1/8 X 64 5/16	2	4
16	18 1/8 X 73 5/16	2	4
1H2	25 1/2 X 28 9/16	2	2
1H3	25 1/2 X 40 15/16	2	3
1H4	25 1/2 X 53 3/16	2	3
1H45	25 1/2 X 58 13/16	2	3
1H5	25 1/2 X 65 9/16	2	4
1H6	25 1/2 X 74 9/16	2	4
29 1/2 X 29 7/32	29 1/2 X 29 7/32	2	2
29 1/2 X 41 19/32	29 1/2 X 41 19/32	2	3
29 1/2 X 53 27/32	29 1/2 X 53 27/32	2	3
29 1/2 X 59 15/32	29 1/2 X 59 15/32	2	3
29 1/2 X 66 7/32	29 1/2 X 66 7/32	2	4
29 1/2 X 75 7/32	29 1/2 X 75 7/32	2	4
22	36 X 30 5/16	2	3
23	36 X 42 11/16	2	3
24	36 X 54 15/16	2	3
245	36 X 60 9/16	2	4
25	36 X 67 5/16	2	4
26	36 X 76 5/16	2	4
41 X 31 5/32	41 X 31 5/32	3	2
41 X 43 17/32	41 X 43 17/32	3	3
41 X 55 25/32	41 X 55 25/32	3	3
41 X 61 3/8	41 X 61 3/8	3	4
41 X 68 5/32	41 X 68 5/32	3	4
41 X 77 5/32	41 X 77 5/32	3	4
47 X 32 5/32	47 X 32 5/32	3	2
47 X 44 17/32	47 X 44 17/32	3	3
47 X 56 25/32	47 X 56 25/32	3	3
47 X 62 3/8	47 X 62 3/8	3	3
47 X 69 5/32	47 X 69 5/32	3	4
47 X 78 5/32	47 X 78 5/32	3	4
32	52 1/8 X 33	3	2
33	52 1/8 X 45 3/8	3	3
34	52 1/8 X 57 5/8	3	3
345	52 1/8 X 63 1/4	3	3
35	52 1/8 X 70	3	4
36	52 1/8 X 79	3	4

INSTALLATION ANCHOR CHART NOTES:

1. Window sizes shown are for Commodity Size Windows.
2. Modular Size Windows will use the anchor quantities shown for the next larger sized Commodity Window.
3. Anchor spacing requirements for Commodity and Modular Size Windows shown on this sheet.
4. Dimensions given are for half radius head units, full radius will be shorter.

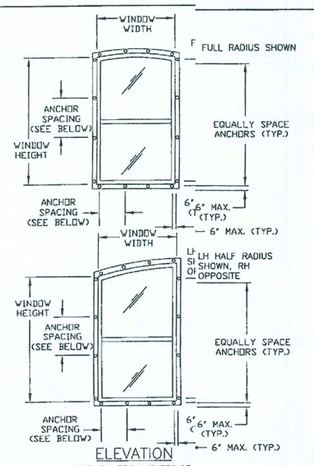

Spacing applicable to Commodity Sizes shown in anchor chart and Modular Sizes.

IMPORTANT INFORMATION & GENERAL NOTES (cont.)

ANCHOR INSTALLATION INSTRUCTIONS (cont.)

#8 WOOD SCREWS:

16) SEE THIS SHEET FOR #8 WOOD SCREW INSTALLATION ANCHOR CHART.
17) #8 WOOD SCREW MUST BE OF SUFFICIENT LENGTH TO ACHIEVE MINIMUM EMBEDMENT OF 1" INTO THE TWO BY WOOD BUCK OR BUILD-DOWN STRUCTURAL FRAMING COMPONENT.
18) SPACING OF WOOD SCREWS SHALL BE:
a) 6" FROM EACH CORNER OF THE HEAD, SILL AND JAMBS, AND
b) EVENLY SPACED BETWEEN CORNER ANCHORS BUT NOT EXCEEDING 24" O.C. SPACING IN HEAD, SILL AND JAMBS.

NAILS:

19) NAILS SHALL MEET THE FOLLOWING REQUIREMENTS:
a) 0.113" DIAMETER OR GREATER,
b) SUFFICIENT LENGTH TO ACHIEVE MINIMUM EMBEDMENT OF 1 7/8" INTO THE TWO BY WOOD BUCK OR BUILD-DOWN STRUCTURAL FRAMING COMPONENT(GENERALLY, NAIL 2 3/8" LENGTH OR GREATER SHALL MEET THIS REQUIREMENT).
c) HELICAL (SCREW) OR ANNULAR (RING) SHANK STYLE ONLY, AND
d) MANUFACTURER SHALL BE LISTED IN NATIONAL EVALUATION SERVICES, INC.'S NATIONAL EVALUATION REPORT, NER-272.
20) MANUFACTURER'S NAILS MEETING THESE REQUIREMENTS ARE (BUT NOT LIMITED TO) THE FOLLOWING:
a) PASLODE DEFORMED SHANK NAIL, NO. 404947, 404537, 650111 AND 650148.
b) DURO-FAST DEFORMED SHANK NAIL NO. 325.
21) SPACING OF NAILS SHALL BE:
a) 6" FROM EACH CORNER OF THE HEAD, SILL AND JAMBS, AND
b) EVENLY SPACED BETWEEN CORNER ANCHORS AND NOT EXCEEDING 7" O.C. SPACING FOR THE JAMBS AND 10" O.C. SPACING FOR THE HEAD AND SILL.

DESIGN PRESSURE RATING & FBC REQUIREMENTS

22) IF EXACT WINDOW SIZE IS NOT LISTED IN WOOD SCREW ANCHOR CHART, USE ANCHOR QUANTITY LISTED FOR NEXT LARGER SIZE.
23) INSTALLATIONS DEPICTED IN THESE INSTRUCTIONS ACCEPTABLE FOR DESIGN PRESSURES TO 70 PSF FOR WINDOW SIZES SHOWN IN CHART WITH SPACINGS SHOWN. DESIGN PRESSURES (D.P.) SHOWN ARE POSITIVE AND NEGATIVE.
24) GLASS THICKNESS MAY VARY PER THE REQUIREMENTS OF ASTM E1300 GLASS CHARTS.
25) COMPLIES WITH CHAPTER 17 SECTIONS 1707.4.4.1 FOR ANCHORING REQUIREMENTS AND 1707.4.4.3 FOR WOOD OR APPROVED FRAMING MEMBERS, MARCH 1, 2002.

REV	
B	FLORIDA EXTRUDERS INTERNATIONAL, INC. 2540 JEWETT LANE SANFORD, FLORIDA
C	CERTIFICATE OF AUTHORIZATION NO. 9235
D	TITLE: INSTALLATION DETAIL W/#8 SCREWS OR NAILS
E	SINGLE HUNG RADIUS HEAD FIN - SERIES 1000, 1500, & 2000
	DRAWN BY: RJA APPROVED BY: RJA
	DATE: 7/29/04 SCALE: N. T. S. DWG.: FLEX0041 SHEET 2 OF 2

REVISIONS :

Maronda Homes
4005 MARONDA WAY SANFORD, FLORIDA
(407) 321-0064

FLORIDA EXTRUDERS
WINDOWS IN FRAME

RELEASE DATE:

SHEET:
1 of 3

c:\pasteuptitle.dgn Apr. 03, 2006 09:10:46

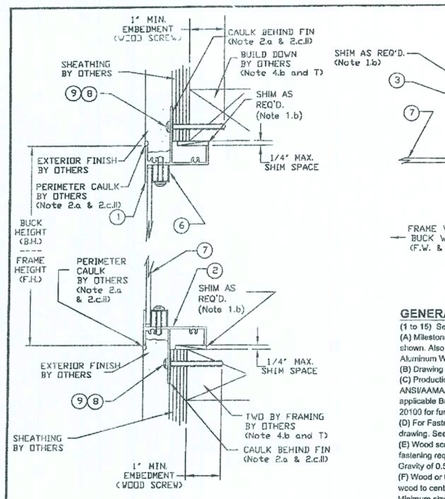

SECTION A-A

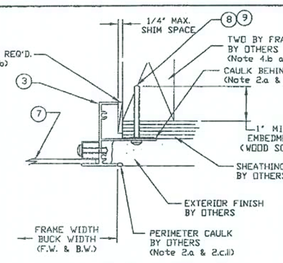

SECTION B-B

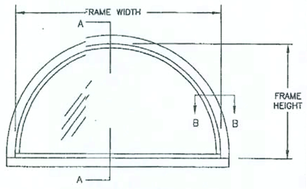

EXTERIOR ELEVATION

PARTS LIST

1 Head - FinFrame
2 Sill - Fin Frame
3 Jamb - Fin Frame
4 Not Used
5 Not Used
6 Glazing Bead - Rigid Vinyl
7 Glazing - See Note (B) and (C)
8 #8 Wood or Tapping Screw with a minimum embedment of 1" into the structural wood substrate. See Note (K) and Detail A on this drawing and Note 4.b & 8 on Drawing FLEX20100.
9 Round Head Deformed Shank Nail with minimum 0.113" diameter (11 GA) and minimum embedment of 1-7/8" into the structural wood substrate. See Note (N) and Detail A on this drawing and Notes 4.b & 9 on Drawing FLEX20100.

GENERAL NOTES

(1 to 15) See General Notes Drawing FLEX20100, Sheet 1 & 2.
(A) Milestone Series 1000 Designer Fixed Aluminum Window is shown. Also applicable to Series 1750 & 2000 Designer Fixed Aluminum Windows.
(B) Drawing applicable to Non-Impact Resistant glazed windows.
(C) Production Glazing may differ from that tested as allowed by ANSI/AAMA/NWWDA 101/I.S. 2 - 97 or 101/I.S. 2 NAFS and applicable Building Code. See Note 12 and 13 on Drawing FLEX 20100 for further details.
(D) For Fastener Spacing see Notes (L) and (P) on Sheet 2 of this drawing. See Note (H) regarding deviations.
(E) Wood screw and nail withdrawal values used to generate the fastening requirements are based on Southern Pine with a Specific Gravity of 0.55. See Note (H) regarding deviations.
(F) Wood or tapping screw edge distance measured from edge of wood to centerline of wood or tapping screw must meet or exceed 1". Minimum size and embedment per Parts List. See Note (H) regarding deviations.
(G) Nail edge distance measured from edge of wood to centerline of nail must meet or exceed 9/16" or 5 times Shank Diameter, whichever is larger. Minimum size and embedment per Parts List. See Note (H) regarding deviations.
(H) Any deviation less than the minimum requirements stated must be approved by the manufacturer or engineered by "other" Design Professional in accordance with the applicable Building Code and Product Approval.
(I) All field supplied holes in the frame (if required) will be 3/16" in diameter for #8 wood screws or the shank diameter of the nail rounded up to the next standard designation drill bit size.
(J) Wood Screws and Nails SHALL NOT be mixed to fasten the same assembly.

DISCLAIMER: The purpose of this installation drawing is to present the manufacturer's recommendations for anchorage [i.e., concrete screws, wood screws, tapping screws, nails and Vulkem Structural Adhesive (or other approved equal) as applicable] to achieve the design pressure specified on the fenestration product as required by the 2003 Florida Building Code (FBC), Section 1709.4.4, 2004 FBC-Building, Section 1714.5.4 and the 2004 FBC-Residential, Section R613.6. Recommendations regarding flashing, sealing, sealants or other joint sealant practices does not constitute a warranty either expressed or implied.

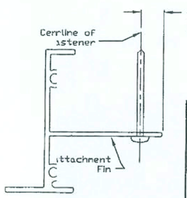

Wood Scr or Nail Head must be in full cont with Attachment Fin. Centerline fastener shall be approximy 9/32" from edge of AttachmentFin.

DETAIL A

Robert J. Amoruso, P.E.
FL License No. 49752

Drawing No. FLEX28120
Sheet 1 of 2

Florida Extruders Int'l, Inc.
2540 Jewett Lane - Sanford, Fl. 32771
407-323-3350 - 407-322-3507 (fax)
www.floridaextruders.com
Florida COA No. 9235

TITLE: Milestone Series 1000 & 2000 Non-Impact Resistant Aluminum Fin Frame Designer Fixed Window Installation Drawing for Wood Substrate with Wood Screws or Nails

REVISIONS			
No.	Date	Description	By
1.	12/27/05	Summarized	RJA

Date: 12/27/05
Scale: NTS
Drawn By: RJA
Checked By: JH

FASTENER INSTALLATION INSTRUCTIONS - FLEX28120

#8 WOOD SCREWS:

(K) #8 Wood Screw must be of sufficient length to achieve minimum embedment of 1" into the two by wood framing or the build-down framing component.
(L) #8 Wood Screw spacing shall be as follows:
- 6" maximum from each corner of head, sill or jambs, and
- evenly spaced between corner fasteners but not exceeding 24" o.c. spacing in head, sill or jambs for the following configurations at design pressures to 70 PSF:
  - eyebrow
  - half-circle arch
  - half-eyebrow
  - octagon
  - fan
  - pentoid
  - full-circle
  - half-circle
  - triangle
  - trapezoid
  - oval
- evenly spaced between corner fasteners but not exceeding 16" o.c. spacing in head, sill or jambs for the following configurations at design pressures to 70 PSF:
  - quarter-circle
  - quarter-circle arch
  - half-fan

(M) Wood screws shall not be used to fasten assembly into end grain of wood.

NAILS:

(N) Nails shall meet the following requirements:
- 0.113" diameter or greater,
- sufficient length to achieve minimum embedment of 1 7/8" into the two by wood or build-down framing (generally, nail 2 3/8" length or greater shall meet this requirement), and
- helical (screw) or annular (ring) shank style only.

(O) Manufacturer's nails meeting these requirements are (but not limited to) the following:
- Paslode deformed shank nail, No. 404947, 404537, 650111 and 650148.
- Duro-Fast deformed shank nail No. 325.

(P) Spacing of nails shall be:
- 6" from each corner of the head, sill and jambs, and
- evenly spaced between corner fasteners but not exceeding the o.c. spacing in head, sill and jambs for the following configurations at design pressures 46 to 70 PSF:

eyebrow	7" o.c. spacing
half-eyebrow	7" o.c. spacing
fan	7" o.c. spacing
half-fan	5" o.c. spacing
full-circle	9" o.c. spacing
half-circle	7" o.c. spacing
half-circle arch	7" o.c. spacing
quarter-circle	5" o.c. spacing
quarter-circle arch	5" o.c. spacing
oval	15" o.c. spacing
octagon	9" o.c. spacing
pentoid	7" o.c. spacing
triangle	7" o.c. spacing
trapezoid	7" o.c. spacing

(P) Spacing of nail
- evenly
the fo

eyebrow	12" o.c. spacing
half-eyebrow	12" o.c. spacing
fan	11" o.c. spacing
half-fan	8" o.c. spacing
full-circle	14" o.c. spacing
half-circle	11" o.c. spacing
half-circle arch	12" o.c. spacing
quarter-circle	8" o.c. spacing
quarter-circle arch	8" o.c. spacing
oval	24" o.c. spacing
octagon	14" o.c. spacing
pentoid	12" o.c. spacing
triangle	12" o.c. spacing
trapezoid	12" o.c. spacing

(Q) Nails shall not b

Nails shall be (continued):
- ly spaced between corner fasteners but not exceeding the o.c. spacing in head, sill and jambs for

eyebrow	12" o.c. spacing
half-eyebrow	12" o.c. spacing
fan	11" o.c. spacing
half-fan	8" o.c. spacing
full-circle	14" o.c. spacing
half-circle	11" o.c. spacing
half-circle arch	12" o.c. spacing
quarter-circle	8" o.c. spacing
quarter-circle arch	8" o.c. spacing
oval	24" o.c. spacing
octagon	14" o.c. spacing
pentoid	12" o.c. spacing
triangle	12" o.c. spacing
trapezoid	12" o.c. spacing

x be used to fasten assembly into end grain of wood

DESIGN PRESSURE RATING & FBC CODE COMPLIANCE

(R) Installations des depicted in these instructions acceptable for design pressures to 70 PSF with fastener spacing in Notes (L) and (P). Design Pressures (D.P.) are positive and negative. Overall window assembly design pressure may be less than 70 PSF and shall be determined in accordance with Note 13 of FLEX20100.
(S) Production Glazing may differ from that tested as allowed by ANSI/AAMA/NWWDA 101/I.S. 2 - 97 or 101/I.S. 2 NAFS and applicable Building Code. See Note 12 and 13 on Drawing FLEX 20100 for further details.
(T) Structural two by wood and/or framing at the head, sill and jambs to be securely fastened to transfer the load to the wood structural substrate per the FBC and the engineer of record's details as applicable.
(U) See FLEX20100, Notes 10 to 15 for additional FBC Code Compliance.

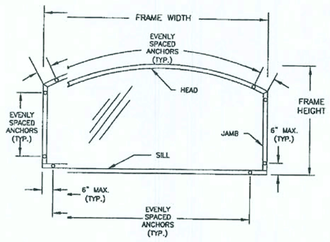

EXTERIOR ELEVATION

ANCHOR SPACING ILLUSTRATION
EYEBROW ARCH DESIGNER WINDOW

Drawing No. FLEX28120
Sheet 2 of 2

Florida Extruders Int'l, Inc.
2540 Jewett Lane - Sanford, Fl. 32771
407-323-3350 - 407-322-3507 (fax)
www.floridaextruders.com
Florida COA No. 9235

TITLE: Milestone Series 1000 & 2000 Non-Impact Resistant Aluminum Fin Frame Designer Fixed Window Installation Drawing for Wood Substrate with Wood Screws or Nails

REVISIONS			
No.	Date	Description	By
1.	12/27/05	Summarized	RJA

Date: 12/27/05
Scale: NTS
Drawn By: RJA
Checked By: JH

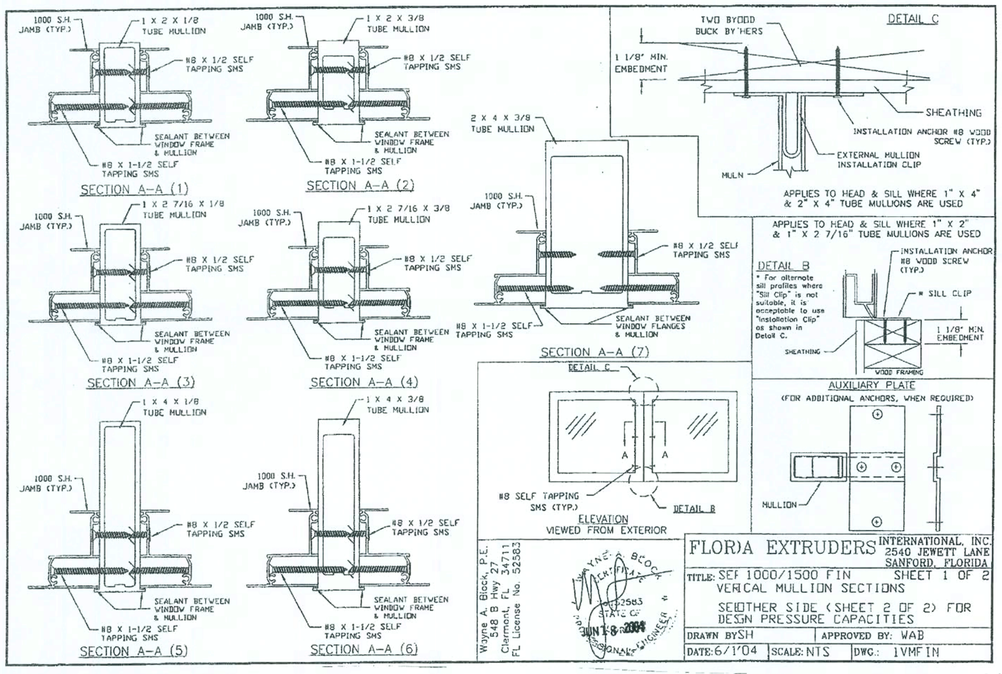

Wayne A. Block, P.E.
348 B Hwy 27
Clermont, FL 34711
FL License No. 52583

FLORIDA EXTRUDERS INTERNATIONAL, INC. 2540 JEWETT LANE SANFORD, FLORIDA
TITLE: SER 1000/1500 FIN SHEET 1 OF 2
VERTICAL MULLION SECTIONS
SEE OTHER SIDE (SHEET 2 OF 2) FOR DESIGN PRESSURE CAPACITIES
DRAWN BY: SH | APPROVED BY: WAB
DATE: 6/1/04 | SCALE: NTS | DWG.: 1VMFIN

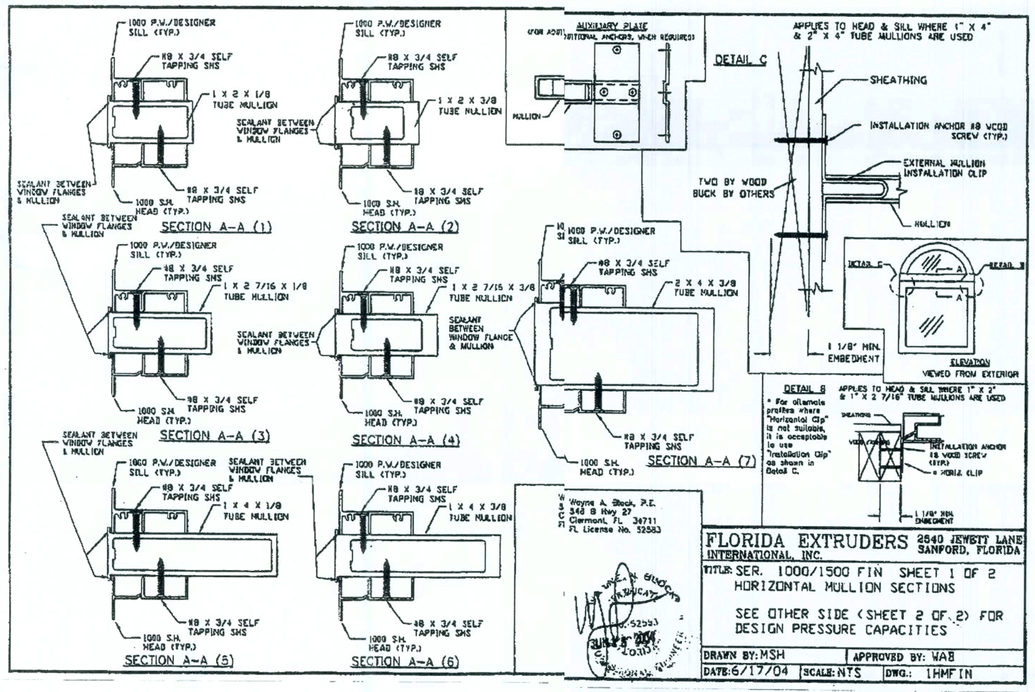

Wayne A. Block, P.E.
348 B Hwy 27
Clermont, FL 34711
FL License No. 52583

FLORIDA EXTRUDERS INTERNATIONAL, INC. 2540 JEWETT LANE SANFORD, FLORIDA
TITLE: SER. 1000/1500 FIN SHEET 1 OF 2
HORIZONTAL MULLION SECTIONS
SEE OTHER SIDE (SHEET 2 OF 2) FOR DESIGN PRESSURE CAPACITIES
DRAWN BY: MSH | APPROVED BY: WAB
DATE: 6/17/04 | SCALE: NTS | DWG.: 1HMFIN

REVISIONS :

Maronda Homes
4005 MARONDA WAY SANFORD, FLORIDA
(407) 321-0064

FLORIDA EXTRUDERS
WINDOWS IN FRAME

RELEASE DATE:

SHEET:
2 of 3

c:\pasteuptitle.dgn Apr. 03, 2006 09:11:03

c:\pasteuptitle.dgn 09/11/03 03 APR 2006

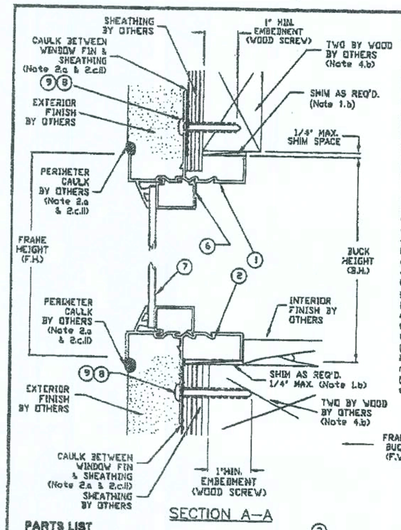

SECTION A–A

GENERAL NOTES

(1 to 13) See General Notes Drawing FLEX20100, Sheet 1 & 2.

(A) Milestone Series 2000 Fixed Aluminum Window is shown. Also applicable to Series 1000 Fixed Aluminum Windows.

(B) Drawing applicable to Non-Impact Resistant glazed windows.

(C) Production Glazing may differ from that tested as allowed by ANSI/AAMA/NWWDA 101/I.S. 2 - 97 or 101/I.S. 2 NAFS and applicable Building Code. See Note 12 and 13 on Drawing FLEX 20100 for further details.

(D) For Fastener Spacing see Elevation View on Sheet 1 and Notes (L) & (P) on Sheet 2 of this drawing. See Note (H) regarding deviations.

(E) Wood screw and nail withdrawal values used to generate the fastening requirements are based on Southern Pine with a Specific Gravity of 0.55. See Note (H) regarding deviations.

(F) Wood or tapping screw edge distance measured from edge of wood to centerline of wood or tapping screw must meet or exceed 1". Minimum size and embedment per Parts List. See Note (H) regarding deviations.

(G) Nail edge distance measured from edge of wood to centerline of nail must meet or exceed 9/16" or 5 times Shank Diameter, whichever is larger. Minimum size and embedment per Parts List. See Note (H) regarding deviations.

(H) Any deviation less than the minimum requirements stated must be approved by the manufacturer or engineered by "other" Design Professional in accordance with the applicable Building Code and Product Approval.

(I) All field supplied holes in the frame (if required) will be 3/16" in diameter for #8 wood screws or the shank diameter of the nail rounded up to the next standard designation drill bit size.

(J) Wood Screws and Nails SHALL NOT be mixed to fasten the same assembly.

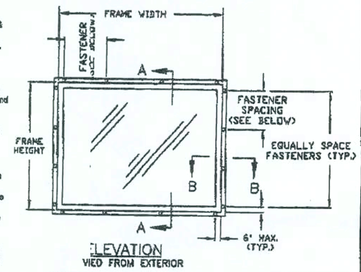

ELEVATION
VIEW FROM EXTERIOR

HEAD, SILL & JAMB ANCHOR SPACING

WOOD SCREW TO 70 PSF D.P.: 24" O.C. MAX.

NAIL - 46 P TO 70 PSF D.P.: 7" O.C. MAX.
NAIL - 145 PSF D.P.: 10" O.C. MAX.

DISCLAIMER: The purpose of this installation drawing is to present the manufacturer's recommendations for anchorage (i.e., screws, wood screws, tapping screws, nails and Vulkem Structural Adhesive (or other approved equal) as applicable) to achieve the design pressure specified on the fenestration product as required by the 2001 Florida Building Code (FBC), Section 1709.4.1, 2004 FBC-Building, Section 1709.4.1 and the 2004 FBC-Residential, Section R613.5. Recommendations regarding flashing, sealing, sealants or other joint sealant practices does not constitute a warranty of any kind or implied.

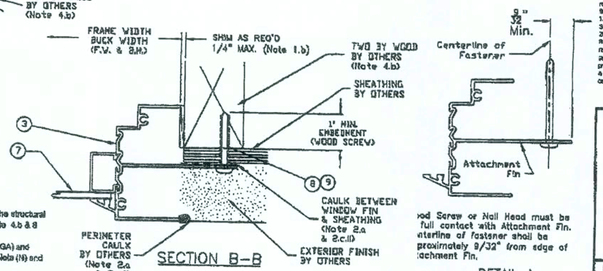

SECTION B–B

DETAIL A

PARTS LIST

1. Head - FinFrame
2. Sill - Fin Frame
3. Jamb - Fin Frame
4. Not Used
5. Not Used
6. Glazing Bead - Rigid Vinyl
7. Glazing - See Note (B) and (C)
8. #8 Wood or Tapping Screw with a minimum embedment of 1" into the structural wood substrate. See Note (K) and Detail A on this drawing and Note 4.b & 8 on Drawing FLEX20100.
9. Round Head Galvanized Shank Nail with minimum 0.113" diameter (11 GA) and minimum embedment of 1-7/8" into the structural wood substrate. See Note (N) and Detail A on this drawing and Notes 4.b & 9 on Drawing FLEX20100.

Florida Extruders Int'l., Inc.
2540 Sweet Lane - Sanford, FL 32771
407-323-3345 - 407-323-3507 (fax)
www.floridaextruders.com
Florida CGC lic. 1525

TITLE: Milestone Series 2000 & 2000 Non-Impact Resistant Aluminum Fin Frame Fixed Window Installation Drawing for Wood Buck with Wood Screws or Nails

No.	Date	Revisions	Description
0	12/27/05	N/A	Submitted to FBC

Date: 12/27/05
Scale: NTS
Drawn: By: JM
Checked By: JN

Robert J. Attanasio, P.E.
FL License No. 49752

Drawing No. FLEX27120
Sheet 1 of 2

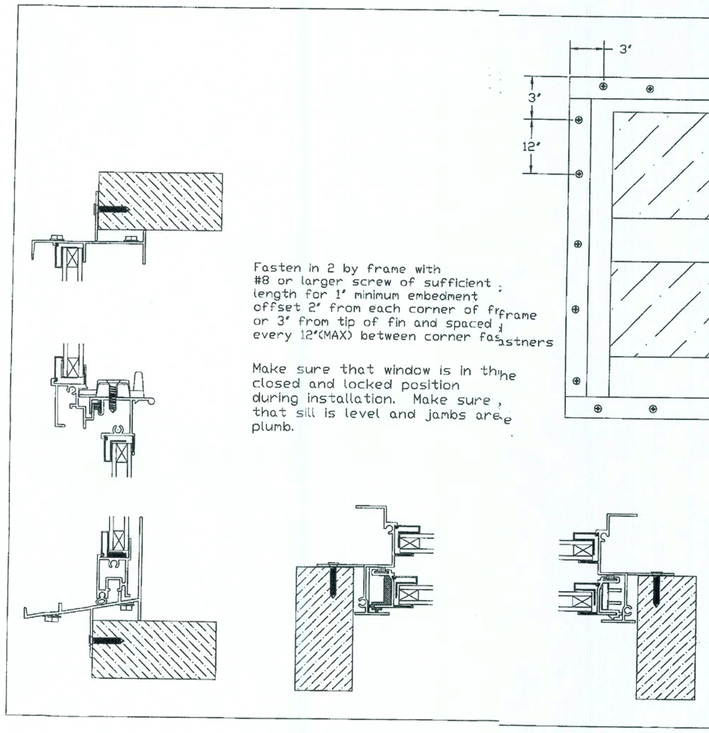

VINDOWS — DIVISION OF ATRIUM COMPANIES, INC.
H.R. #300/375S.H.
INSTALLATION DETAILS

REVISIONS :

Maronda Homes
(407) 321-0064 4005 MARONDA WAY SANFORD, FLORIDA

FLORIDA EXTRUDERS
WINDOWS IN FRAME

RELEASE DATE:

SHEET: 3 of 3

$DATE$ $TIME$ $FILE$

c:\fla-extrud.dgn Sep. 01, 2006 09:32:39