DATE 11/12/2010

Columbia County Building Permit

This Permit Must Be Prominently Posted on Premises During Construction

PERMIT
000029001

APPLICANT DOUGLAS BAGGETT PHONE 407-482-8282

ADDRESS PO BOX 781766 ORLANDO FL 32878

OWNER DONALD BAGGETT PHONE 863-467-4885

ADDRESS 415 SW CIRRUS DRIVE LAKE CITY FL 32025

CONTRACTOR DOUG BAGGETT PHONE 407-235-4515

LOCATION OF PROPERTY 441 SOUTH, R AVIATION DR, SOUTH ON CIRRUS BLVD, GO STRAIGHT AT 90 DEGREE CURVE INTO DRIVE

TYPE DEVELOPMENT HANGAR ESTIMATED COST OF CONSTRUCTION 63250.00

HEATED FLOOR AREA TOTAL AREA 5225.00 HEIGHT 14.00 STORIES 1

FOUNDATION CONCRETE WALLS FRAMED ROOF PITCH 1/12 FLOOR SLAB

LAND USE & ZONING AG-3 MAX. HEIGHT 35

Minimum Set Back Requirments: STREET-FRONT 30.00 REAR 25.00 SIDE 25.00

NO. EX.D.U. 0 FLOOD ZONE X DEVELOPMENT PERMIT NO.

PARCEL ID 22-5S-17-09322-004 SUBDIVISION LAKE CITY AIRPARK

LOT 4 BLOCK PHASE UNIT TOTAL ACRES 4.01

Culvert Permit No.	Culvert Waiver	Contractor's License Number	Applicant/Owner/Contractor	
		CGC1508506		
EXISTING	X10-415	HD	BK	N
Driveway Connection	Septic Tank Number	LU & Zoning checked by	Approved for Issuance	New Resident

COMMENTS: ACCESSORY USE, NOC ON FILE

Check # or Cash 1787

FOR BUILDING & ZONING DEPARTMENT ONLY

(footer/Slab)

Temporary Power _____ date/app. by Foundation _____ date/app. by Monolithic _____ date/app. by

Under slab rough-in plumbing _____ date/app. by Slab _____ date/app. by Sheathing/Nailing _____ date/app. by

Framing _____ date/app. by Insulation _____ date/app. by

Rough-in plumbing above slab and below wood floor _____ date/app. by Electrical rough-in _____ date/app. by

Heat & Air Duct _____ date/app. by Peri. beam (Lintel) _____ date/app. by Pool _____ date/app. by

Permanent power _____ date/app. by C.O. Final _____ date/app. by Culvert _____ date/app. by

Pump pole _____ date/app. by Utility Pole _____ date/app. by M/H tie downs, blocking, electricity and plumbing _____ date/app. by

Reconnection _____ date/app. by RV _____ date/app. by Re-roof _____ date/app. by

BUILDING PERMIT FEE $ 320.00 CERTIFICATION FEE $ 26.13 SURCHARGE FEE $ 26.13

MISC. FEES $ 0.00 ZONING CERT. FEE $ 50.00 FIRE FEE $ 0.00 WASTE FEE $

FLOOD DEVELOPMENT FEE $ FLOOD ZONE FEE $ CULVERT FEE $ **TOTAL FEE** 422.26

INSPECTORS OFFICE CLERKS OFFICE

NOTICE: IN ADDITION TO THE REQUIREMENTS OF THIS PERMIT, THERE MAY BE ADDITIONAL RESTRICTIONS APPLICABLE TO THIS PROPERTY THAT MAY BE FOUND IN THE PUBLIC RECORDS OF THIS COUNTY. AND THERE MAY BE ADDITIONAL PERMITS REQUIRED FROM OTHER GOVERNMENTAL ENTITIES SUCH AS WATER MANAGEMENT DISTRICTS, STATE AGENCIES, OR FEDERAL AGENCIES.

"WARNING TO OWNER: YOUR FAILURE TO RECORD A NOTICE OF COMMENCEMENT MAY RESULT IN YOUR PAYING TWICE FOR IMPROVEMENTS TO YOUR PROPERTY. IF YOU INTEND TO OBTAIN FINANCING, CONSULT WITH YOUR LENDER OR AN ATTORNEY BEFORE RECORDING YOUR NOTICE OF COMMENCEMENT."

EVERY PERMIT ISSUED SHALL BECOME INVALID UNLESS THE WORK AUTHORIZED BY SUCH PERMIT IS COMMENCED WITHIN 180 DAYS AFTER ITS ISSUANCE, OR IF THE WORK AUTHORIZED BY SUCH PERMIT IS SUSPENDED OR ABANDONED FOR A PERIOD OF 180 DAYS AFTER THE TIME THE WORK IS COMMENCED. A VALID PERMIT RECIEVES AN APPROVED INSPECTION EVERY 180 DAYS. WORK SHALL BE CONSIDERED NOT SUSPENDED, ABANDONED OR INVALID WHEN THE PERMIT HAS RECIEVED AN APPROVED INSPECTION WITHIN 180 DAYS OT THE PREVIOUS INSPECTION.

The Issuance of this Permit Does Not Waive Compliance by Permittee with Deed Restrictions.

DATE 12/28/2010

Columbia County Building Permit

This Permit Must Be Prominently Posted on Premises During Construction

PERMIT
000029099

APPLICANT DOUGLAS BAGGETT PHONE 407-482-8282

ADDRESS PO BOX 781766 ORLANDO FL 32878

OWNER DONALD BAGGETT PHONE 863-467-4885

ADDRESS 415 SW CIRRUS DRIVE LAKE CITY FL 32025

CONTRACTOR DOUG BAGGETT PHONE 407-235-4515

LOCATION OF PROPERTY 441 SOUTH, R AVIATION DR, SOUTH ON CIRRUS BLVD, GO STRAIGHT AT 90 DEGREE CURVE INTO DRIVE

TYPE DEVELOPMENT SFD, UTILITY ESTIMATED COST OF CONSTRUCTION 263300.00

HEATED FLOOR AREA 2467.00 TOTAL AREA 5266.00 HEIGHT 16.00 STORIES 1

FOUNDATION CONCRETE WALLS FRAMED ROOF PITCH 6/12 FLOOR SLAB

LAND USE & ZONING AG-3 MAX. HEIGHT 35

Minimum Set Back Requirments: STREET-FRONT 30.00 REAR 25.00 SIDE 25.00

NO. EX.D.U. 0 FLOOD ZONE X DEVELOPMENT PERMIT NO.

PARCEL ID 22-5S-17-09322-004 SUBDIVISION LAKE CITY AIRPARK

LOT 4 BLOCK PHASE UNIT TOTAL ACRES 4.00

Culvert Permit No.	Culvert Waiver	Contractor's License Number	Applicant/Owner/Contractor
		CGC1508506	

Driveway Connection	Septic Tank Number	LU & Zoning checked by	Approved for Issuance	New Resident
EXISTING	10-0514-N	BK	TC	N

COMMENTS: FLOOR ONE FOOT ABOVE THE ROAD

NOC ON FILE

Check # or Cash 1863

FOR BUILDING & ZONING DEPARTMENT ONLY

(footer/Slab)

Temporary Power _____ date/app. by Foundation _____ date/app. by Monolithic _____ date/app. by

Under slab rough-in plumbing _____ date/app. by Slab _____ date/app. by Sheathing/Nailing _____ date/app. by

Framing _____ date/app. by Insulation _____ date/app. by

Rough-in plumbing above slab and below wood floor _____ date/app. by Electrical rough-in _____ date/app. by

Heat & Air Duct _____ date/app. by Peri. beam (Lintel) _____ date/app. by Pool _____ date/app. by

Permanent power _____ date/app. by C.O. Final _____ date/app. by Culvert _____ date/app. by

Pump pole _____ date/app. by Utility Pole _____ date/app. by M/H tie downs, blocking, electricity and plumbing _____ date/app. by

Reconnection _____ date/app. by RV _____ date/app. by Re-roof _____ date/app. by

BUILDING PERMIT FEE $ 1320.00 CERTIFICATION FEE $ 26.33 SURCHARGE FEE $ 26.33

MISC. FEES $ 0.00 ZONING CERT. FEE $ FIRE FEE $ 0.00 WASTE FEE $

FLOOD DEVELOPMENT FEE $ FLOOD ZONE FEE $ 25.00 CULVERT FEE $ **TOTAL FEE** 1397.66

INSPECTORS OFFICE CLERKS OFFICE

NOTICE: IN ADDITION TO THE REQUIREMENTS OF THIS PERMIT, THERE MAY BE ADDITIONAL RESTRICTIONS APPLICABLE TO THIS PROPERTY THAT MAY BE FOUND IN THE PUBLIC RECORDS OF THIS COUNTY. AND THERE MAY BE ADDITIONAL PERMITS REQUIRED FROM OTHER GOVERNMENTAL ENTITIES SUCH AS WATER MANAGEMENT DISTRICTS, STATE AGENCIES, OR FEDERAL AGENCIES.

"WARNING TO OWNER: YOUR FAILURE TO RECORD A NOTICE OF COMMENCEMENT MAY RESULT IN YOUR PAYING TWICE FOR IMPROVEMENTS TO YOUR PROPERTY. IF YOU INTEND TO OBTAIN FINANCING, CONSULT WITH YOUR LENDER OR AN ATTORNEY BEFORE RECORDING YOUR NOTICE OF COMMENCEMENT."

EVERY PERMIT ISSUED SHALL BECOME INVALID UNLESS THE WORK AUTHORIZED BY SUCH PERMIT IS COMMENCED WITHIN 180 DAYS AFTER ITS ISSUANCE, OR IF THE WORK AUTHORIZED BY SUCH PERMIT IS SUSPENDED OR ABANDONED FOR A PERIOD OF 180 DAYS AFTER THE TIME THE WORK IS COMMENCED. A VALID PERMIT RECIEVES AN APPROVED INSPECTION EVERY 180 DAYS. WORK SHALL BE CONSIDERED NOT SUSPENDED, ABANDONED OR INVALID WHEN THE PERMIT HAS RECIEVED AN APPROVED INSPECTION WITHIN 180 DAYS OT THE PREVIOUS INSPECTION.

The Issuance of this Permit Does Not Waive Compliance by Permittee with Deed Restrictions.

BK SEE ATTACHED COPY OF PERMIT. T.C.

Columbia County Building Permit Application ENERGY CODE ☑

For Office Use Only Application # 1011-27-A Date Received 11/18 By JW Permit # 29099

Zoning Official BLK Date 23.11.10 Flood Zone X Land Use A-3 Zoning A-3

FEMA Map # N/A Elevation N/A MFE / Unbuilt River N/A Plans Examiner T.C. Date 11-22-10

Comments

☑ NOC ☑ EH ☑ Deed or PA ☑ Site Plan ☐ State Road Info ☐ Parent Parcel #

☐ Dev Permit # ☐ In Floodway ☐ Letter of Auth. from Contractor ☐ F W Comp. letter

IMPACT FEES: EMS Fire Corr Road/Code

School = TOTAL Suspended ☑ VF

Septic Permit No. 10-0514-N Fax 407-482-8283

Name Authorized Person Signing Permit DOUG BAGGETT Phone 407-482-8282 407-235-4515

Address 481 CAREY WAY, ORLANDO, FL 32825

Owners Name DONALD BAGGETT Phone 863-467-4885

911 Address 415 S.W. CIRRUS DRIVE, LAKE CITY, FL

Contractors Name DOUG BAGGETT (PBA BUILDING CORP.) Phone 407-482-8282

Address 481 CAREY WAY, ORLANDO, FL 32825

Fee Simple Owner Name & Address DONALD W. BAGGETT 10151 SE 126th BLVD OKEECHOBEE, FL 34974

Bonding Co. Name & Address N/A

Architect/Engineer Name & Address RTR WORLD SERVICES

Mortgage Lenders Name & Address N/A

Circle the correct power company - FL Power & Light - Clay Elec. - Suwannee Valley Elec. - Progress Energy

Property ID Number 22-5S-17-09322-004 Estimated Cost of Construction $236,000

Subdivision Name LAKE CITY AIRPARK Lot 4 Block Unit Phase

Driving Directions US 441/41, EAST ON AVIATION WAY, SOUTH ON CIRRUS DRIVE. - GO STRAIGHT TO 90 DEGREE CURVE INTO DRIVE.

Number of Existing Dwellings on Property 0

Construction of SINGLE FAMILY RESIDENCE Total Acreage 4 Lot Size

Do you need a - Culvert Permit or Culvert Waiver or Have an Existing Drive Total Building Height 16'

Actual Distance of Structure from Property Lines - Front SEE SITE PLAN 107'8" Side 83' Side 181'10" Rear 324'9"

Number of Stories Heated Floor Area 2467 Total Floor Area 5266 Roof Pitch

Application is hereby made to obtain a permit to do work and installations as indicated. I certify that no work or installation has commenced prior to the issuance of a permit and that all work be performed to meet the standards of all laws regulating construction in this jurisdiction. **CODE:** Florida Building Code 2007 with 2009 Supplements and the 2008 National Electrical Code.

$1447.66 * MINUS ZONING FEE: "JW SPOKE W/ DOUG" - 11.23.10

SSO 32204477
SBC 11/22

10-0514-N.

STATE OF FLORIDA
DEPARTMENT OF HEALTH
ONSITE SEWAGE TREATMENT AND DISPOSAL SYSTEM
APPLICATION FOR CONSTRUCTION PERMIT

PERMIT NO. AP985020
DATE PAID: 11/18/10
FEE PAID: 425.00
RECEIPT #: 12-PID-1536247

APPLICATION FOR:
[X] New System [ ] Existing System [ ] Holding Tank [ ] Innovative
[ ] Repair [ ] Abandonment [ ] Temporary [ ] _____

APPLICANT: DONALD BAGGETT

AGENT: DOUG BAGGETT TELEPHONE: 407-235-4515

MAILING ADDRESS: P.O. BOX 781766, ORLANDO, FL 32878

==========

TO BE COMPLETED BY APPLICANT OR APPLICANT'S AUTHORIZED AGENT. SYSTEMS MUST BE CONSTRUCTED BY A PERSON LICENSED PURSUANT TO 489.105(3)(m) OR 489.552, FLORIDA STATUTES. IT IS THE APPLICANT'S RESPONSIBILITY TO PROVIDE DOCUMENTATION OF THE DATE THE LOT WAS CREATED OR PLATTED (MM/DD/YY) IF REQUESTING CONSIDERATION OF STATUTORY GRANDFATHER PROVISIONS.

==========

PROPERTY INFORMATION

LOT: 4 BLOCK: _____ SUBDIVISION: LC Airpark PLATTED: 1980

PROPERTY ID #: 22-5S-17-09322-004 ZONING: _____ I/M OR EQUIVALENT: [Y / (N)]

PROPERTY SIZE: 4 ACRES WATER SUPPLY: [X] PRIVATE PUBLIC [ ]<=2000GPD [ ]>2000GPD

IS SEWER AVAILABLE AS PER 381.0065, FS? [Y / (N)] DISTANCE TO SEWER: _____ FT

PROPERTY ADDRESS: 415 SW CIRRUS DRIVE, LAKE CITY, FL

DIRECTIONS TO PROPERTY: LAKE CITY AIRPARK - FROM 41/441 GO EAST ON AVIATION DRIVE, THEN SOUTH ON CIRRUS.

BUILDING INFORMATION [X] RESIDENTIAL [ ] COMMERCIAL

Unit No	Type of Establishment	No. of Bedrooms	Building Area Sqft	Commercial/Institutional System Design Table 1, Chapter 64E-6, FAC
1	SINGLE FAMILY RESIDENCE	3	2467	
2				
3				
4				

[ ] Floor/Equipment Drains [ ] Other (Specify) _____

SIGNATURE: _____ DATE: 11/17/2010

DH 4015, 08/09 (Obsoletes previous editions which may not be used)
Incorporated 64E-6.001, FAC

ENTERED KSF

RECEIVED 11/18/10

STATE OF FLORIDA
DEPARTMENT OF HEALTH

APPLICATION FOR ONSITE SEWAGE DISPOSAL SYSTEM CONSTRUCTION PERMIT

Permit Application Number 10-0514-N

PART II - SITE PLAN

* Scale: Each block represents 5 feet and 1 inch = 50 feet. *

SEE ATTACHED
SITE PLAN

Notes:

Site Plan submitted by: DOUG BAGGETT, PBA BUILDING. PRES.
Signature Title

Plan Approved ✓ Not Approved ____ Date 11/18/2010

By ____ County Health Department

ALL CHANGES MUST BE APPROVED BY THE COUNTY HEALTH DEPARTMENT

DH 4015, 10/96 (Replaces HRS-H Form 4015 which may be used)
(Stock Number: 5744-002-4015-6)

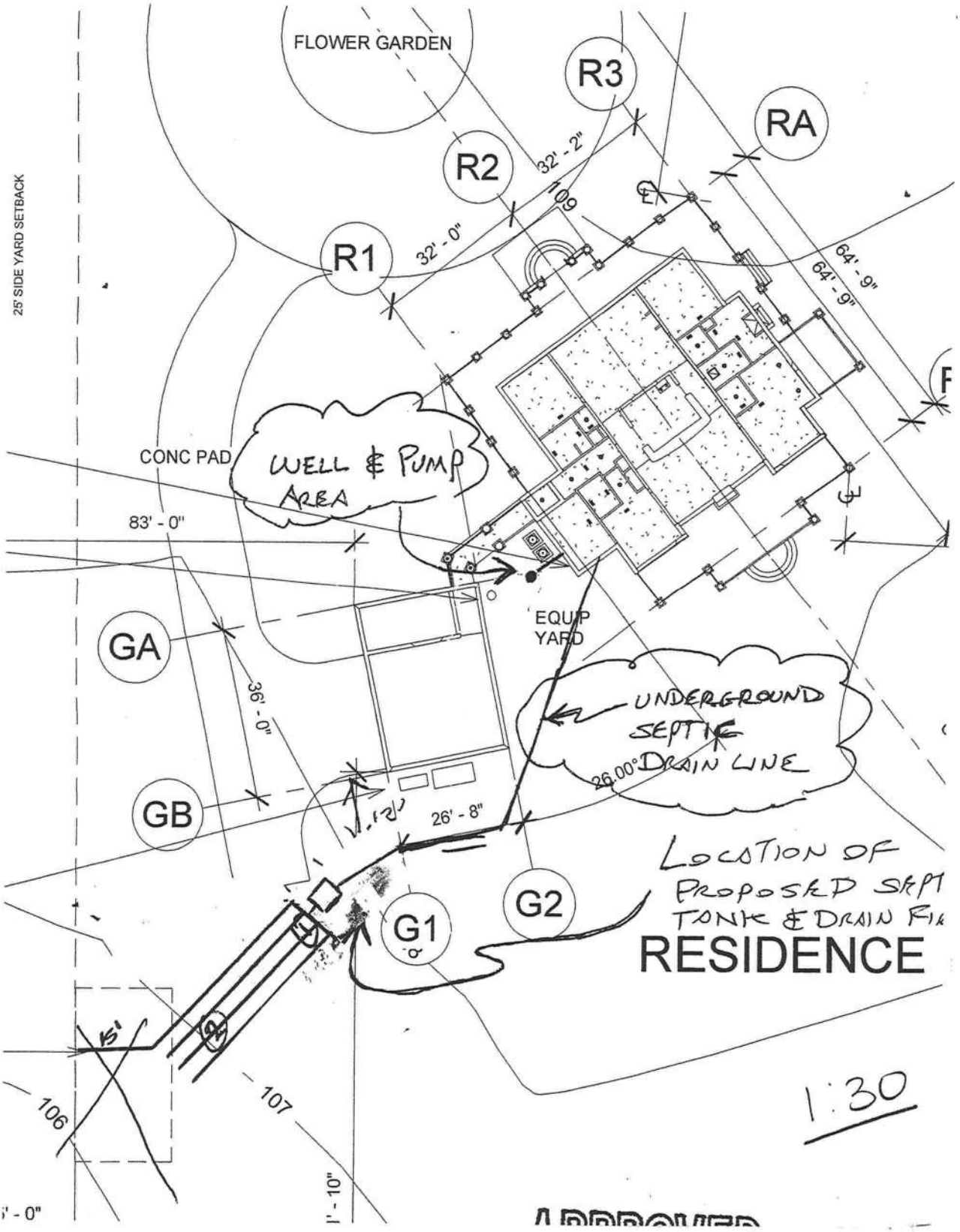
FLOWER GARDEN
R3
RA
R2
32' - 2"
109
R1
32' - 0"
64' - 9"
64' - 9"
25' SIDE YARD SETBACK
CONC PAD
WELL & PUMP AREA
83' - 0"
EQUIP YARD
GA
36' - 0"
UNDERGROUND SEPTIC
26.00° DRAIN LINE
GB
26' - 8"
LOCATION OF PROPOSED SEPT TANK & DRAIN FIE
G2
G1
RESIDENCE
15'
106
107
1' - 10"
1:30

Columbia County Building Permit Application

TIME LIMITATIONS OF APPLICATION : An application for a permit for any proposed work shall be deemed to have been abandoned 180 days after the date of filing, unless such application has been pursued in good faith or a permit has been issued; except that the building official is authorized to grant one or more extensions of time for additional periods not exceeding 90 days each. The extension shall be requested in writing and justifiable cause demonstrated.

TIME LIMITATIONS OF PERMITS: Every permit issued shall become invalid unless the work authorized by such permit is commenced within 180 days after its issuance, or if the work authorized by such permit is suspended or abandoned for a period of 180 days after the time work is commenced. A valid permit receives an approved inspection every 180 days. Work shall be considered not suspended, abandoned or invalid when the permit has received an approved inspection within 180 days of the previous approved inspection.

FLORIDA'S CONSTRUCTION LIEN LAW: Protect Yourself and Your Investment: According to Florida Law, those who work on your property or provide materials, and are not paid-in-full, have a right to enforce their claim for payment against your property. This claim is known as a construction lien. If your contractor fails to pay subcontractors or material suppliers or neglects to make other legally required payments, the people who are owed money may look to your property for payment, even if you have paid your contractor in full.
This means if a lien is filed against your property, it could be sold against your will to pay for labor, materials or other services which your contractor may have failed to pay.

NOTICE OF RESPONSIBILITY TO BUILDING PERMITEE: ***YOU ARE HEREBY NOTIFIED*** as the recipient of a building permit from Columbia County, Florida, you will be held responsible to the County for any damage to sidewalks and/or road curbs and gutters, concrete features and structures, together with damage to drainage facilities, removal of sod, major changes to lot grades that result in ponding of water, or other damage to roadway and other public infrastructure facilities caused by you or your contractor, subcontractors, agents or representatives in the construction and/or improvement of the building and lot for which this permit is issued. No certificate of occupancy will be issued until all corrective work to these public infrastructures and facilities has been corrected.

WARNING TO OWNER: YOUR FAILURE TO RECORD A NOTICE OF COMMENCMENT MAY RESULT IN YOU PAYING TWICE FOR IMPROVEMENTS TO YOUR PROPERTY. A NOTICE OF COMMENCEMENT MUST BE RECORDED AND POSTED ON THE JOB SITE BEFORE THE FIRST INSPECTION. IF YOU INTEND TO OBTAIN FINANCING, CONSULT WITH YOUR LENDER OR ATTORNEY BEFORE RECORDING YOUR NOTICE OF COMMENCEMENT.

OWNERS CERTIFICATION: I CERTIFY THAT ALL THE FOREGOING INFORMATION IS ACCURATE AND THAT ALL WORK WILL BE DONE IN COMPLIANCE WITH ALL APPLICABLE LAWS REGULATING CONSTRUCTION AND ZONING.

NOTICE TO OWNER: There are some properties that may have deed restrictions recorded upon them. These restrictions may limit or prohibit the work applied for in your building permit. It may be to your advantage to check and see if your property is encumbered by any restrictions.

(Owners Must Sign All Applications Before Permit Issuance.)

Owners Signature ****OWNER BUILDERS MUST PERSONALLY APPEAR AND SIGN THE BUILDING PERMIT.**

CONTRACTORS AFFIDAVIT: By my signature I understand and agree that I have informed and provided this written statement to the owner of all the above written responsibilities in Columbia County for obtaining this Building Permit including all application and permit time limitations.

Contractor's Signature (Permitee)

Contractor's License Number CGC1508506
Columbia County
Competency Card Number_____

Affirmed under penalty of perjury to by the Contractor and subscribed before me this 18th **day of** November **20**10.

Personally known____ **or Produced Identification** FL DL

State of Florida Notary Signature (For the Contractor)

SEAL: Notary Public State of Florida
Andrew Walther
My Commission EE032643
Expires 12/20/2014

ATS# 15640

Prepared by:
Michael H. Harrell
Abstract & Title Services, Inc.
283 NW Cole Terrace
Lake City, Florida 32055

Warranty Deed

Individual to Individual

THIS WARRANTY DEED made the 24th day of March, 2006 by

Nicholas D. Carnevale, and his wife, Irene O. Carnevale

hereinafter called the grantor, to

Inst:2006007704 Date:03/29/2006 Time:08:45
Doc Stamp-Deed : 735.00
S.T. DC,P.DeWitt Cason,Columbia County B:1078 P:2365

Donald W. Baggett, and his wife, Julia Elaine Baggett

whose post office address is: 10151 SE 126th Blvd, Okeechobee, FL 34974
hereinafter called the grantee:

(Wherever used herein the terms "grantor" and "grantee" include all the parties to this instrument and the heirs, legal representatives and assigns of individuals, and the successors and assigns of corporation)

Witnesseth: That the grantor, for and in consideration of the sum of $10.00 and other valuable considerations, receipt whereof is hereby acknowledged, hereby grants, bargains, sells, aliens, remises, releases, conveys, and confirms unto the grantee, all that certain land situate in COLUMBIA County, FLORIDA, viz: Parcel ID# R09322-004

Lot 4, of Lake City Airpark, a subdivision according to the plat thereof as recorded in Plat Book 5, Page 10, of the Public Records of Columbia County, Florida; and also, the North Half (N ½) of Oak Street (vacated) as lies South and contiguous to Lot 4.

TOGETHER with all tenements, hereditaments and appurtenances thereto belonging or in anywise appertaining.

TO HAVE AND TO HOLD, the same in fee simple forever.

AND the grantor hereby covenants with said grantee that the grantor is lawfully seized of said land in fee simple; that the grantor has good right and lawful authority to sell and convey said land; that the grantor hereby fully warrants the title to said land and will defend the same against the lawful claims of all persons whomsoever; and that said land is free of all encumbrances, except taxes accruing subsequent to December 31, 2005.

IN WITNESS WHEREOF, the said grantor has signed and sealed these presents the day and year first above written.

Signed, sealed and delivered in our presence:

Traci Landry
Witness
Traci Landry
Printed Name

Jessica Newsome
Witness
Jessica Newsome
Printed Name

Nicholas D. Carnevale
Nicholas D. Carnevale

Irene O. Carnevale
Irene O. Carnevale

STATE OF FLORIDA
COUNTY OF COLUMBIA

The foregoing instrument was acknowledged before me this 24th day of March, 2006 by Nicholas D. Carnevale, and his wife, Irene O. Carnevale personally known to me or, if not personally known to me, who produced drivers License for identification and who did not take an oath.

(SEAL)

MICHAEL H. HARRELL
MY COMMISSION # DD 406480
EXPIRES: April 8, 2009
Bonded Thru Notary Public Underwriters

Notary Public

My Commission Expires:

Inst:201012018597 Date:11/18/2010 Time:11:23 AM
DC,P,DeWitt Cason,Columbia County Page 1 of 1 B:1205 P:291

NOTICE OF COMMENCEMENT

County Clerk's Office Stamp or Seal

Tax Parcel Identification Number _____

THE UNDERSIGNED hereby gives notice that improvements will be made to certain real property, and in accordance with Section 713.13 of the Florida Statutes, the following information is provided in this **NOTICE OF COMMENCEMENT.**

1. Description of property *(legal description)*:
   a) Street *(job)* Address: 415 SW CIRRUS DRIVE, LAKE CITY, FL
2. General description of improvements: SINGLE FAMILY RESIDENCE
3. Owner Information
   a) Name and address: DONALD BAGGETT, 10151 SE 125TH BLVD, OKEECHOBEE, FL
   b) Name and address of fee simple titleholder (if other than owner) _____
   c) Interest in property FEE SIMPLE
4. Contractor Information
   a) Name and address: DOUG BAGGETT, FBA BUILDING CORP, 481 CARRY WAY, ORLANDO, FL 32825
   b) Telephone No.: 407-482-8282 Fax No. (Opt.) _____
5. Surety Information
   a) Name and address: N/A
   b) Amount of Bond: _____
   c) Telephone No.: _____ Fax No. (Opt.) _____
6. Lender
   a) Name and address: N/A
   b) Phone No. _____
7. Identity of person within the State of Florida designated by owner upon whom notices or other documents may be served:
   a) Name and address: DOUG BAGGETT, 481 CARRY WAY, ORLANDO, FL 32825
   b) Telephone No.: 407-482-8282 Fax No. (Opt.) _____
8. In addition to himself, owner designates the following person to receive a copy of the Lienor's Notice as provided in Section 713.13(l)(b), Florida Statutes:
   a) Name and address: _____
   b) Telephone No.: _____ Fax No. (Opt.) _____
9. Expiration date of Notice of Commencement **(the expiration date is one year from the date of recording unless a different date is specified).** _____

WARNING TO OWNER: ANY PAYMENTS MADE BY THE OWNER AFTER THE EXPIRATION OF THE NOTICE OF COMMENCEMENT ARE CONSIDERED IMPROPER PAYMENTS UNDER CHAPTER 713, PART I, SECTION 713.13, FLORIDA STATUTES, AND CAN RESULT IN YOUR PAYING TWICE FOR IMPROVEMENTS TO YOUR PROPERTY; A NOTICE OF COMMENCEMENT MUST BE RECORDED AND POSTED ON THE JOB SITE BEFORE THE FIRST INSPECTION. IF YOU INTEND TO OBTAIN FINANCING, CONSULT YOUR LENDER OR AN ATTORNEY BEFORE COMMENCING WORK OR RECORDING YOUR NOTICE OF COMMENCEMENT.

STATE OF FLORIDA
COUNTY OF COLUMBIA

10. _____
Signature of Owner or Owner's Authorized Office/Director/Partner/Manager

DOUGLAS J. BAGGETT
Print Name

The foregoing instrument was acknowledged before me, a Florida Notary, this 18th day of November, 2010, by:
~~Doug B~~ Andrew Walther as officer / notary **(type of authority, e.g. officer, trustee, attorney fact) for** Doug Baggett **(name of party on behalf of whom instrument was executed).**

Personally Known ____ OR Produced Identification X Type FL DL

Notary Signature _____ Notary Stamp or Seal:

Notary Public State of Florida
Andrew Walther
My Commission EE032643
Expires 12/20/2014

—AND—

11. Verification pursuant to Section 92.525, Florida Statutes. Under penalties of perjury, I declare that I have read the foregoing and that the facts stated in it are true to the best of my knowledge and belief.

_____
Signature of Natural Person Signing (in line #10 above.)

COLUMBIA COUNTY BUILDING DEPARTMENT 6-25-09
RESIDENTIAL CHECK LIST REQUIRMENTS

MINIMUM PLAN REQUIREMENTS FOR THE FLORIDA BUILDING CODE RESIDENTIAL 2007 EFFECTIVE 1 MARCH 2009 & 2009 SUPPLEMENTS EFFECTIVE 1 MARCH 2009, ONE (1) AND TWO (2) FAMILY DWELLINGS with Supplements and Revision, OF THE NATIONAL ELECTRICAL 2008

ALL REQUIREMENTS ARE SUBJECT TO CHANGE

ALL BUILDING PLANS MUST INDICATE COMPLIANCE with the Current 2007 FLORIDA BUILDING CODES RESIDENTIAL EFFECTIVE 1 MARCH 2009 & 2009 SUPPLEMENTS EFFECTIVE 1 MARCH 2009. ALL PLANS OR DRAWINGS SHALL PROVIDE CALCULATIONS AND DETAILS THAT HAVE THE SEAL AND SIGNATURE OF A CERTIFIED ARCHITECT OR ENGINEER REGISTERED IN THE STATE OF FLORIDA, OR ALTERNATE METHODOLOGIES, APPROVED BY THE STATE OF FLORIDA BUILDING COMMISSION FOR ONE-AND-TWO FAMILY DWELLINGS.

FOR DESIGN PURPOSES THE FOLLOWING BASIC WIND SPEEDS ARE PER FIGURE R301.2(4) of the FLORIDA BUILDING CODES RESIDENTIAL (Florida Wind speed map) **SHALL BE USED.**

WIND SPEED LINE SHALL BE DEFINED AS FOLLOWS: THE CENTERLINE OF INTERSTATE 75.

ALL BUILDINGS CONSTRUCTED EAST OF SAID LINE SHALL BE -------- 100 MPH
ALL BUILDINGS CONSTRUCTED WEST OF SAID LINE SHALL BE --------110 MPH
NO AREA IN COLUMBIA COUNTY IS IN A WIND BORNE DEBRIS REGION

	GENERAL REQUIREMENTS: APPLICANT – PLEASE CHECK ALL APPLICABLE BOXES BEFORE SUBMITTAL			Items to Include- Each Box shall be Circled as Applicable		
				Yes	No	N/A
1	Two (2) complete sets of plans containing the following:					
2	All drawings must be clear, concise, drawn to scale, details that are not used shall be marked void					
3	Condition space (Sq. Ft.)	2467	Total (Sq. Ft.) under roof 5266	IIIIIIII	IIIIIIII	IIIII

Designers name and signature shall be on all documents and a licensed architect or engineer, signature and official embossed seal shall be affixed to the plans and documents as per the FLORIDA BUILDING CODES RESIDENTIAL R101.2.1

Site Plan information including:

4	Dimensions of lot or parcel of land	✓		
5	Dimensions of all building set backs	✓		
6	Location of all other structures (include square footage of structures) on parcel, existing or proposed well and septic tank and all utility easements.	✓		
7	Provide a full legal description of property. SEE WARRANTY DEED	N/A		

Wind-load Engineering Summary, calculations and any details required

	GENERAL REQUIREMENTS: APPLICANT – PLEASE CHECK ALL APPLICABLE BOXES BEFORE SUBMITTAL	Items to Include- Each Box shall be Circled as Applicable		
8	**Plans or specifications must show compliance with FBCR Chapter 3**	IIIIII	IIIII	IIIIII
		YES	**NO**	**N/A**
9	Basic wind speed (3-second gust), miles per hour	✓		
10	(Wind exposure – if more than one wind exposure is used, the wind exposure and applicable wind direction shall be indicated)	✓		
11	Wind importance factor and nature of occupancy	✓		
12	The applicable internal pressure coefficient, Components and Cladding	✓		
13	The design wind pressure in terms of psf (kN/m²), to be used for the design of exterior component, cladding materials not specifally designed by the registered design professional.	✓		

Elevations Drawing including:

14	All side views of the structure	✓		
15	Roof pitch	✓		
16	Overhang dimensions and detail with attic ventilation	✓		
17	Location, size and height above roof of chimneys	✓		
18	Location and size of skylights with Florida Product Approval	N/A		
18	Number of stories	✓		
20A	Building height from the established grade to the roofs highest peak	✓		

Floor Plan including:

20	Dimensioned area plan showing rooms, attached garage, breeze ways, covered porches, deck, balconies	✓		
21	Raised floor surfaces located more than 30 inches above the floor or grade	✓		
22	All exterior and interior shear walls indicated	✓		
23	Shear wall opening shown (Windows, Doors and Garage doors)	✓		
24	Show compliance with Section FBCR 310 Emergency escape and rescue opening shown in each bedroom (net clear opening shown) and Show compliance with Section FBCR 613.2 where the opening of an operable window is located more than 72 inches above the finished grade or surface below, the lowest part of the clear opening of the window shall be a minimum of 24 inches above the finished floor of the room in which the window is located. Glazing between the floor and 24 inches shall be fixed or have openings through which a 4-inch-diameter sphere cannot pass.	✓		
25	Safety glazing of glass where needed	N/A		
26	Fireplaces types (gas appliance) (vented or non-vented) or wood burning with Hearth (see chapter 10 of FBCR)			
27	Show stairs with dimensions (width, tread and riser and total run) details of guardrails, Handrails	✓		
28	Identify accessibility of bathroom (see FBCR SECTION 322)			

All materials placed within opening or onto/into exterior walls, soffits or roofs shall have Florida product approval number and mfg. installation information submitted with the plans (see Florida product approval form)

GENERAL REQUIREMENTS: APPLICANT – PLEASE CHECK ALL APPLICABLE BOXES BEFORE SUBMITTAL	Items to Include- Each Box shall be Circled as Applicable

FBCR 403: Foundation Plans

		YES	NO	N/A
29	Location of all load-bearing walls footings indicated as standard, monolithic, dimensions, size and type of reinforcing.	✓		
30	All posts and/or column footing including size and reinforcing	✓		
31	Any special support required by soil analysis such as piling.	✓		
32	Assumed load-bearing valve of soil 2,000 Pound Per Square Foot	✓		
33	Location of horizontal and vertical steel, for foundation or walls (include # size and type) **For** structures with foundation which establish new electrical utility companies service connection a Concrete Encased Electrode will be required within the foundation to serve as an grounding electrode system. Per the National Electrical Code article 250.52.3	✓		

FBCR 506: CONCRETE SLAB ON GRADE

34	Show Vapor retarder (6mil. Polyethylene with joints lapped 6 inches and sealed)	✓		
35	Show control joints, synthetic fiber reinforcement or welded fire fabric reinforcement and Supports	✓		

FBCR 320: PROTECTION AGAINST TERMITES

36	Indicate on the foundation plan if soil treatment is used for subterranean termite prevention or Sub mit other approved termite protection methods. **Protection shall be provided by registered termiticides**	✓		

FBCR 606: Masonry Walls and Stem walls (load bearing & shear Walls)

37	Show all materials making up walls, wall height, and Block size, mortar type	✓		
38	Show all Lintel sizes, type, spans and tie-beam sizes and spacing of reinforcement			

Metal frame shear wall and roof systems shall be designed, signed and sealed by Florida Prof. Engineer or Architect

Floor Framing System: First and/or second story

39	Floor truss package shall including layout and details, signed and sealed by Florida Registered Professional Engineer	✓		
40	Show conventional floor joist type, size, span, spacing and attachment to load bearing walls, stem walls and/or priers	N/A		
41	Girder type, size and spacing to load bearing walls, stem wall and/or priers	N/A		
42	Attachment of joist to girder	N/A		
43	Wind load requirements where applicable	✓		
44	Show required under-floor crawl space	✓		

45	Show required amount of ventilation opening for under-floor spaces	✓		
46	Show required covering of ventilation opening	✓		
47	Show the required access opening to access to under-floor spaces			
48	Show the sub-floor structural panel sheathing type, thickness and fastener schedule on the edges & interi of the areas structural panel sheathing	N/A		
49	Show Draftstopping, Fire caulking and Fire blocking			
50	Show fireproofing requirements for garages attached to living spaces, per FBCR section 309	N/A		
51	Provide live and dead load rating of floor framing systems (psf).	N/A		

FBCR CHAPTER 6 WOOD WALL FRAMING CONSTRUCTION

	GENERAL REQUIREMENTS: APPLICANT – PLEASE CHECK ALL APPLICABLE BOXES BEFORE SUBMITTAL	Items to Include- Each Box shall be Circled as Applicable		
		YES	NO	N/A
52	Stud type, grade, size, wall height and oc spacing for all load bearing or shear walls	N/A		
53	Fastener schedule for structural members per table FBCR 602.3 are to be shown			
54	Show Wood structural panel's sheathing attachment to studs, joist, trusses, rafters and structural members, showing fastener schedule attachment on the edges & intermediate of the areas structural panel sheathing			
55	Show all required connectors with a max uplift rating and required number of connectors and oc spacing for continuous connection of structural walls to foundation and roof trusses or rafter systems			
56	Show sizes, type, span lengths and required number of support jack studs, king studs for shear wall opening and girder or header per FBCR Table 502.5 (1)			
57	Indicate where pressure treated wood will be placed			
58	Show all wall structural panel sheathing, grade, thickness and show fastener schedule for structural panel sheathing edges & intermediate areas			
59	A detail showing gable truss bracing, wall balloon framing details or/ and wall hinge bracing detail			

FBCR :ROOF SYSTEMS:

60	Truss design drawing shall meet section FBCR 802.10 Wood trusses	N/A		
61	Include a layout and truss details, signed and sealed by Florida Professional Engineer	✓		
62	Show types of connector's assemblies' and resistance uplift rating for all trusses and rafters	✓		
63	Show gable ends with rake beams showing reinforcement or gable truss and wall bracing details	✓		
64	Provide dead load rating of trusses	✓		

FBCR 802:Conventional Roof Framing Layout

65	Rafter and ridge beams sizes, span, species and spacing	✓		
66	Connectors to wall assemblies' include assemblies' resistance to uplift rating	✓		
67	Valley framing and support details	N/A		
68	Provide dead load rating of rafter system	✓		

FBCR Table 602,3(2) & FBCR 803 ROOF SHEATHING

69	Include all materials which will make up the roof decking, identification of structural panel sheathing, grade, thickness	✓		
70	Show fastener Size and schedule for structural panel sheathing on the edges & intermediate areas	✓		

FBCR ROOF ASSEMBLIES FRC Chapter 9

71	Include all materials which will make up the roof assembles covering	✓		
72	Submit Florida Product Approval numbers for each component of the roof assembles covering	PBA TBD		

FBCR Chapter 11 Energy Efficiency Code for residential building

Residential construction shall comply with this code by using the following compliance methods in the FBCR chapter11 Residential buildings compliance methods. **Two of the required forms are to be submitted**, *N1100.1.1.1 As an alternative to the computerized Compliance Method A, the Alternate Residential Point System Method hand calculation, Alternate Form 600A, may be used. All requirements specific to this calculation are located in Sub appendix C to Appendix G. Buildings complying by this alternative shall meet all mandatory requirements of this chapter. Computerized versions of the Alternate Residential Point System Method shall not be acceptable for code compliance.*

	GENERAL REQUIREMENTS: APPLICANT – PLEASE CHECK ALL APPLICABLE BOXES BEFORE SUBMITTAL	Items to Include- Each Box shall be Circled as Applicable		
		YES	NO	N/A
73	Show the insulation R value for the following areas of the structure	✓		
74	Attic space	✓		
75	Exterior wall cavity	✓		
76	Crawl space	N/A		

HVAC information

77	Submit two copies of a Manual J sizing equipment or equivalent computation study	TBD PBA		
78	Exhaust fans shown in bathrooms **Mechanical exhaust capacity of 50 cfm intermittent or 20 cfm continuous required**	✓		
79	Show clothes dryer route and total run of exhaust duct	✓		

Plumbing Fixture layout shown

80	All fixtures waste water lines shall be shown on the foundation plan	✓		
81	Show the location of water heater	✓		

Private Potable Water

82	Pump motor horse power	TBD PBA		
83	Reservoir pressure tank gallon capacity	PBA		
84	Rating of cycle stop valve if used	PBA		

Electrical layout shown including

85	Show Switches, receptacles outlets, lighting fixtures and Ceiling fans	✓		
86	Show all 120-volt, single phase, 15- and 20-ampere branch circuits outlets required to be protected by **Ground-Fault Circuit Interrupter (GFCI) Article 210.8 A**	✓		
87	Show the location of smoke detectors & Carbon monoxide detectors	✓		
88	Show service panel, sub-panel, location(s) and total ampere ratings	✓		
89	On the electrical plans identify the electrical service overcurrent protection device for the main electrical service. This device shall be installed on the exterior of structures to serve as a disconnecting means for the utility company electrical service. Conductors used from the exterior disconnecting means to a panel or sub panel shall have four-wire conductors, of which one conductor shall be used as an equipment ground. Indicate if the utility company service entrance cable will be of the overhead or underground type. **For structures** with foundation which establish new electrical utility companies service connection a Concrete Encased Electrode will be required within the foundation to serve as an Grounding electrode system. Per the National Electrical Code article 250.52.3	✓ ~~SAL~~		
90	Appliances and HVAC equipment and disconnects			
91	Show all 120-volt, single phase, 15- and 20-ampere branch circuits supplying outlets installed in dwelling unit family rooms, dining rooms, living rooms, parlors, libraries, dens, bedrooms, sunrooms, recreation rooms, closets, hallways, or similar rooms or areas shall be protected by a listed **Combination arc-fault circuit interrupter,** Protection device.	✓		

Disclosure Statement for Owner Builders *If you as the applicant will be acting as an owner/builder under section 489.103(7) of the Florida Statutes, submit the required owner builder disclosure statement form.*

Notice Of Commencement

A notice of commencement form **recorded** in the Columbia County Clerk Office is required to be filed with the building department Before Any Inspections can be preformed.

GENERAL REQUIREMENTS: APPLICANT – PLEASE CHECK ALL APPLICABLE BOXES BEFORE SUBMITTAL	Items to Include- Each Box shall be Circled as Applicable

THE FOLLOWING ITEMS MUST BE SUBMITTED WITH BUILDING PLANS

			YES	NO	N/A
92	**Building Permit Application** A current Building Permit Application form is to be completed and submitted for all residential projects	PBA	✓		
93	**Parcel Number** The parcel number (Tax ID number) from the Property Appraiser (386) 758-1084 is required. A copy of property deed is also requested	PBA	✓		
94	**Environmental Health Permit or Sewer Tap Approval** A copy of a approved Columbia County Environmental Health (386) 758-1058	PBA			TBD
95	**City of Lake City** A permit showing an approved waste water sewer tap	PBA			✓
96	**Toilet facilities shall be provided for all construction sites**	PBA	✓		
97	**Town of Fort White** (386) 497-2321 If the parcel in the application for building permit is within the Corporate city limits of Fort White an approval land use development letter issued by the Town of Fort is required to be submitted with the application for a building permit.	N/A			✓

98	**Flood Information:** All projects within the Floodway of the Suwannee or Santa Fe Rivers shall require permitting through the Suwannee River Water Management District, before submitting a application to this office. Any project located within a flood zone where the base flood elevation (100 year flood) has been established shall meet the requirements of Section 8.5.2 of the Columbia County Land Development Regulations. Any project located within a flood zone where the base flood elevation has not been established (Zone A) shall meet the requirements of Section 8.5.3 of the Columbia County Land Development Regulations N/A	✓		
99	CERTIFIED FINISHED FLOOR ELEVATIONS will be required on any project where the base flood elevation (100 year flood) has been established N/A			
100	A development permit will also be required. Development permit cost is **$50.00** PBA			
101	**Driveway Connection:** If the property does not have an existing access to a public road, then an application for a culvert permit (**$25.00**) must be made. If the applicant feels that a culvert is not needed, they may apply for a culvert waiver (**$50.00**). All culvert waivers are sent to the Columbia County Public Works Department for approval or denial. PBA			✓
102	**911 Address:** If the project is located in an area where a 911 address has not been issued, then application for a 911address must be applied for and **received** through the Columbia County Emergency Management Office of 911 Addressing Department (386) 758-1125 PBA	✓		

Section R101.2.1 of the Florida Building Code Residential:

The provisions of Chapter 1, Florida Building Code, Building shall govern the administration and enforcement of the Florida Building Code, Residential.

Section 105 of the Florida Building Code defines the:

Time limitation of application.

An application for a permit for any proposed work shall be deemed to have been abandoned 180 days after the date of filing, unless such application has been pursued in good faith or a permit has been issued; except that the building official is authorized to grant one or more extensions of time for additional periods not exceeding 90 days each. The extension shall be requested in writing and justifiable cause demonstrated.

Single-family residential dwelling.

Section 105.3.4 A building permit for a single-family residential dwelling must be issued within 30 working days of application therefor unless unusual circumstances require a longer time for processing the application or unless the permit application fails to satisfy the Florida Building Code or the enforcing agency's laws or ordinances.

Permit intent.

Section 105.4.1: A permit issued shall be constructed to be a license to proceed with the work and not as authority to violate, cancel, alter or set aside any of the provisions of the technical codes, nor shall issuance of a permit prevent the building official from thereafter requiring a correction of errors in plans, construction or violations of this code. Every permit issued shall become invalid unless the work authorized by such permit is commenced within six months after its issuance, or if the work authorized by such permit is suspended or abandoned for a period of six months after the time the work is commenced.

PRODUCT APPROVAL SPECIFICATION SHEET

Location: _____ **Project Name:** BAGGETT RESIDENCE

As required by Florida Statute 553.842 and Florida Administrative Code 9B-72, please provide the information and the product approval number(s) on the building components listed below if they will be utilized on the construction project for which you are **applying for a building permit on or after April 1, 2004**. We recommend you contact your local product supplier should you not know the product approval number for any of the applicable listed products. More information about statewide product approval can be obtained at www.floridabuilding.org

Category/Subcategory	Manufacturer	Product Description	Approval Number(s)
A. EXTERIOR DOORS		SEE DRAWINGS	
1. Swinging			
2. Sliding			
3. Sectional (GARAGE)	WAYNE DALTON	SERIES 8000 GARAGE DOOR	FL8248-R4(8248.16)
4. Roll up			
5. Automatic			
6. Other			
B. WINDOWS		SEE DRAWINGS	
1. Single hung			
2. Horizontal Slider			
3. Casement			
4. Double Hung			
5. Fixed			
6. Awning			
7. Pass -through			
8. Projected			
9. Mullion			
10. Wind Breaker			
11 Dual Action			
12. Other			
C. PANEL WALL		~~WILL FORWARD~~	
1. Siding	JAMES HARDIE	HARDI PLANK LAP SIDING	FL13192-R1
2. Soffits	NUSCO	ALUMINUM SOFFIT PANELS	FL4459-R2
3. EIFS	N/A		
4. Storefronts			
5. Curtain walls			
6. Wall louver			
7. Glass block			
8. Membrane			
9. Greenhouse			
10. Other			
D. ROOFING PRODUCTS		~~WILL FORWARD~~	
1. Asphalt Shingles			
2. Underlayments	W.R. GRACE	ICE & WATER SHIELD	FL298-R2
3. Roofing Fasteners	~~OMG~~ II	~~FL699~~ SEMCO FASTEN SCHEDULE	FL-10741
4. Non-structural Metal	SOUTHERN STRUCTURES	~~[illegible]~~ - 5V CRIMP ROOF	FL11937
Rf 5. Built-Up Roofing	N/A		
6. Modified Bitumen			
7. Single Ply Roofing Sys			
8. Roofing Tiles			
9. Roofing Insulation			
10. Waterproofing			
11. Wood shingles /shakes			
12. Roofing Slate			

FORM 1100A-08

FLORIDA ENERGY EFFICIENCY CODE FOR BUILDING CONSTRUCTION

Florida Department of Community Affairs Residential Performance Method A

Project Name:	R1110119	Builder Name:	Doug Baggett
Street:		Permit Office:	Columbia County
City, State, Zip:	Lake City , FL ,	Permit Number:	29099
Owner:	Doug Baggett	Jurisdiction:	221000
Design Location:	FL, Gainesville		

1. New construction or existing	New (From Plans)
2. Single family or multiple family	Single-family
3. Number of units, if multiple family	1
4. Number of Bedrooms	3
5. Is this a worst case?	No
6. Conditioned floor area (ft²)	2619

7. Windows(551.3 sqft.)	Description	Area
a. U-Factor:	Dbl, U=0.35	551.30 ft²
SHGC:	SHGC=0.27	
b. U-Factor:	N/A	ft²
SHGC:		
c. U-Factor:	N/A	ft²
SHGC:		
d. U-Factor:	N/A	ft²
SHGC:		
e. U-Factor:	N/A	ft²
SHGC:		

8. Floor Types (2619.0 sqft.)	Insulation	Area
a. Slab-On-Grade Edge Insulation	R=0.0	2619.00 ft²
b. N/A	R=	ft²
c. N/A	R=	ft²

9. Wall Types(2155.3 sqft.)	Insulation	Area
a. Concrete Block - Int Insul, Exterior	R=4.0	2155.30 ft²
b. N/A	R=	ft²
c. N/A	R=	ft²
d. N/A	R=	ft²

10. Ceiling Types (2619.0 sqft.)	Insulation	Area
a. Cathedral/Single Assembly (Vented)	R=19.0	2619.00 ft²
b. N/A	R=	ft²
c. N/A	R=	ft²

11. Ducts
a. Sup: Attic Ret: Attic AH: Interior Sup. R= 6, 225 ft²

12. Cooling systems	
a. Central Unit	Cap: 57.0 kBtu/hr SEER: 13
13. Heating systems	
a. Electric Heat Pump	Cap: 57.0 kBtu/hr HSPF: 8
14. Hot water systems	
a. Propane	Cap: 80 gallons EF: 0.59
b. Conservation features None	
15. Credits	CF, Pstat

Glass/Floor Area: 0.211

Total As-Built Modified Loads: 35.41
Total Baseline Loads: 51.30

PASS

I hereby certify that the plans and specifications covered by this calculation are in compliance with the Florida Energy Code.

PREPARED BY: Lisa M Reese
DATE: 11-19-10

I hereby certify that this building, as designed, is in compliance with the Florida Energy Code.

OWNER/AGENT: _____
DATE: _____

Review of the plans and specifications covered by this calculation indicates compliance with the Florida Energy Code. Before construction is completed this building will be inspected for compliance with Section 553.908 Florida Statutes.

GREAT SEAL OF THE STATE OF FLORIDA · IN GOD WE TRUST

BUILDING OFFICIAL: _____
DATE: _____

- Compliance requires certification by the air handler unit manufacturer that the air handler enclosure qualifies as certified factory-sealed in accordance with N1110.A.3.

COLUMBIA COUNTY BUILDING DEPARTMENT · Received for FILE COPY · Code Compliance · PLANS EXAMINER

PROJECT

Title:	R1110119	Bedrooms:	3	Adress Type:	Street Address
Building Type:	FLAsBuilt	Conditioned Area:	2619	Lot #	
Owner:	Doug Baggett	Total Stories:	1	Block/SubDivision:	
# of Units:	1	Worst Case:	No	PlatBook:	
Builder Name:		Rotate Angle:	0	Street:	
Permit Office:	Columbia County	Cross Ventilation:	No	County:	Columbia
Jurisdiction:	221000	Whole House Fan:	No	City, State, Zip:	Lake City , FL ,
Family Type:	Single-family				
New/Existing:	New (From Plans)				
Comment:					

CLIMATE

√	Design Location	TMY Site	IECC Zone	Design Temp 97.5 %	Design Temp 2.5 %	Int Design Temp Winter	Int Design Temp Summer	Heating Degree Days	Design Moisture	Daily Temp Range
____	FL, Gainesville	FL_GAINESVILLE_REGI	2	32	92	75	70	1305.5	51	Medium

FLOORS

√	#	Floor Type	Perimeter	R-Value	Area	Tile	Wood	Carpet
____	1	Slab-On-Grade Edge Insulatio	231.3 ft	0	2619 ft²	0.25	0.5	0.25

ROOF

√	#	Type	Materials	Roof Area	Gable Area	Roof Color	Solar Absor.	Tested	Deck Insul.	Pitch
____	1	Hip	Metal	2760 ft²	0 ft²	Medium	0.65	N	0	18.4 deg

ATTIC

√	#	Type	Ventilation	Vent Ratio (1 in)	Area	RBS	IRCC
____	1	Partial cathedral cei	Vented	300	2619 ft²	N	N

CEILING

√	#	Ceiling Type	R-Value	Area	Framing Frac	Truss Type
____	1	Cathedral/Single Assembly (Vented)	19	2619 ft²	0.1	Wood

WALLS

√	#	Ornt	Adjacent To	Wall Type	Cavity R-Value	Area	Sheathing R-Value	Framing Fraction	Solar Absor.
____	1	NE	Exterior	Concrete Block - Int Insul	4	597.3333	0	0	0.03
____	2	SE	Exterior	Concrete Block - Int Insul	4	480.5 ft²	0	0	0.03
____	3	SW	Exterior	Concrete Block - Int Insul	4	595.2 ft²	0	0	0.03
____	4	NW	Exterior	Concrete Block - Int Insul	4	482.2222	0	0	0.03

WINDOWS

Orientation shown is the entered, asBuilt orientation.

√	#	Ornt	Frame	Panes	NFRC	U-Factor	SHGC	Storms	Area	Overhang Depth	Overhang Separation	Int Shade	Screening
____	1	NE	TIM	Low-E Double	Yes	0.35	0.27	N	80 ft²	10 ft 4 in	0 ft 6 in	HERS 2006	None
____	2	NE	TIM	Low-E Double	Yes	0.35	0.27	N	80.4 ft²	17 ft 0 in	4 ft 0 in	HERS 2006	None
____	3	NE	None	Low-E Double	Yes	0.35	0.27	N	12 ft²	2 ft 0 in	2 ft 0 in	HERS 2006	None
____	4	NE	TIM	Low-E Double	Yes	0.35	0.27	N	15.6 ft²	17 ft 0 in	2 ft 0 in	HERS 2006	None
____	5	SE	TIM	Low-E Double	Yes	0.35	0.27	N	20.1 ft²	17 ft 4 in	0 ft 6 in	HERS 2006	None
____	6	SE	None	Low-E Double	Yes	0.35	0.27	N	4 ft²	9 ft 8 in	0 ft 6 in	HERS 2006	None
____	7	SE	None	Low-E Double	Yes	0.35	0.27	N	8 ft²	0 ft 6 in	2 ft 0 in	HERS 2006	None
____	8	SE	None	Low-E Double	Yes	0.35	0.27	N	12 ft²	2 ft 0 in	2 ft 0 in	HERS 2006	None
____	9	SW	TIM	Low-E Double	Yes	0.35	0.27	N	40.2 ft²	13 ft 0 in	0 ft 6 in	HERS 2006	None
____	10	SW	None	Low-E Double	Yes	0.35	0.27	N	72 ft²	9 ft 8 in	0 ft 6 in	HERS 2006	None
____	11	SW	None	Low-E Double	Yes	0.35	0.27	N	72 ft²	13 ft 0 in	0 ft 6 in	HERS 2006	None
____	12	SW	TIM	Low-E Double	Yes	0.35	0.27	N	7.8 ft²	13 ft 0 in	0 ft 6 in	HERS 2006	None
____	13	NW	TIM	Low-E Double	Yes	0.35	0.27	N	20.1 ft²	9 ft 8 in	0 ft 6 in	HERS 2006	None
____	14	NW	TIM	Low-E Double	Yes	0.35	0.27	N	20.1 ft²	9 ft 8 in	0 ft 6 in	HERS 2006	None
____	15	NW	None	Low-E Double	Yes	0.35	0.27	N	9 ft²	4 ft 4 in	0 ft 6 in	HERS 2006	None
____	16	NW	None	Low-E Double	Yes	0.35	0.27	N	18 ft²	6 ft 0 in	0 ft 6 in	HERS 2006	None
____	17	NW	None	Low-E Double	Yes	0.35	0.27	N	12 ft²	0 ft 6 in	0 ft 6 in	HERS 2006	None
____	18	NW	None	Low-E Double	Yes	0.35	0.27	N	12 ft²	12 ft 8 in	0 ft 6 in	HERS 2006	None
____	19	NW	None	Low-E Double	Yes	0.35	0.27	N	36 ft²	9 ft 8 in	0 ft 6 in	HERS 2006	None

INFILTRATION & VENTING

√	Method	SLA	CFM 50	ACH 50	ELA	EqLA	--- Forced Ventilation --- Supply CFM	Exhaust CFM	Run Time Fraction	Fan Watts
____	Default	0.00036	2473	6.09	135.8	255.3	0 cfm	0 cfm	0	0

COOLING SYSTEM

√	#	System Type	Subtype	Efficiency	Capacity	Air Flow	SHR	Ducts
____	1	Central Unit	None	SEER: 13	57 kBtu/hr	cfm	0.8	sys#1

HEATING SYSTEM

√	#	System Type	Subtype	Efficiency	Capacity	Ducts
____	1	Electric Heat Pump	None	HSPF: 8	57 kBtu/hr	sys#1

HOT WATER SYSTEM

√	#	System Type	EF	Cap	Use	SetPnt	Conservation
____	1	Propane	0.59	80 gal	60 gal	120 deg	None

SOLAR HOT WATER SYSTEM

√	FSEC Cert #	Company Name	System Model #	Collector Model #	Collector Area	Storage Volume	FEF
_____	None	None			ft²		

DUCTS

√	#	---- Supply ---- Location	R-Value	Area	---- Return ---- Location	Area	Leakage Type	Air Handler	CFM 25	Percent Leakage	QN	RLF
_____	1	Attic	6	225 ft²	Attic	75 ft²	Default Leakage	Interior	(Default)	(Default) %		

TEMPERATURES

Programable Thermostat: Y

Ceiling Fans:

Cooling	[X] Jan	[X] Feb	[X] Mar	[X] Apr	[X] May	[X] Jun	[X] Jul	[X] Aug	[X] Sep	[X] Oct	[X] Nov	[X] Dec
Heating	[X] Jan	[X] Feb	[X] Mar	[X] Apr	[X] May	[X] Jun	[X] Jul	[X] Aug	[X] Sep	[X] Oct	[X] Nov	[X] Dec
Venting	[X] Jan	[X] Feb	[X] Mar	[X] Apr	[X] May	[X] Jun	[X] Jul	[X] Aug	[X] Sep	[X] Oct	[X] Nov	[X] Dec

Thermostat Schedule: HERS 2006 Reference

Schedule Type		Hours 1	2	3	4	5	6	7	8	9	10	11	12
Cooling (WD)	AM	78	78	78	78	78	78	78	78	80	80	80	80
	PM	80	80	78	78	78	78	78	78	78	78	78	78
Cooling (WEH)	AM	78	78	78	78	78	78	78	78	78	78	78	78
	PM	78	78	78	78	78	78	78	78	78	78	78	78
Heating (WD)	AM	66	66	66	66	66	68	68	68	68	68	68	68
	PM	68	68	68	68	68	68	68	68	68	68	66	66
Heating (WEH)	AM	66	66	66	66	66	68	68	68	68	68	68	68
	PM	68	68	68	68	68	68	68	68	68	68	66	66

Code Compliance Checklist

Residential Whole Building Performance Method A - Details

ADDRESS:	PERMIT #:
Lake City, FL,	

INFILTRATION REDUCTION COMPLIANCE CHECKLIST

COMPONENTS	SECTION	REQUIREMENTS FOR EACH PRACTICE	CHECK
Exterior Windows & Doors	N1106.AB.1.1	Maximum: .3 cfm/sq.ft. window area; .5 cfm/sq.ft. door area.	
Exterior & Adjacent Walls	N1106.AB.1.2	Caulk, gasket, weatherstrip or seal between: windows/doors & frames, surrounding wall; foundation & wall sole or sill plate; joints between exterior wall panels at corners; utility penetrations; between wall panels & top/bottom plates; between walls and floor. EXCEPTION: Frame walls where a continuous infiltration barrier is installed that extends from, and is sealed to, the foundation to the top plate.	
Floors	N1106.AB.1.2	Penetrations/openings > 1/8" sealed unless backed by truss or joint members. EXCEPTION: Frame floors where a continuous infiltration barrier is installed that is sealed to the perimeter, penetrations and seams.	
Ceilings	N1106.AB.1.2	Between walls & ceilings; penetrations of ceiling plane to top floor; around shafts, chases, soffits, chimneys, cabinets sealed to continuous air barrier; gaps in gyp board & top plate; attic access. EXCEPTION: Frame ceilings where a continuous infiltration barrier is installed that is sealed at the perimeter, at penetrations and seams.	
Recessed Lighting Fixtures	N1106.AB.1.2	Type IC rated with no penetrations, sealed; or Type IC or non-IC rated, installed inside a sealed box with 1/2" clearance & 3" from insulation; or Type IC with < 2.0 cfm from conditioned space, tested.	
Multi-story Houses	N1106.AB.1.2	Air barrier on perimeter of floor cavity between floors.	
Additional Infiltration reqts	N1106.AB.1.3	Exhaust fans vented to outdoors, dampers; combustion space heaters comply with NFPA, have combustion air.	

OTHER PRESCRIPTIVE MEASURES (must be met or exceeded by all residences.)

COMPONENTS	SECTION	REQUIREMENTS	CHECK
Water Heaters	N1112.AB.3	Comply with efficiency requirements in Table N1112.ABC.3 Switch or clearly marked circuit breaker (electric) or cutoff (gas) must be provided. External or built-in heat trap required.	
Swimming Pools & Spas	N1112.AB.2.3	Spas & heated pools must have covers (except solar heated). Non-commercial pools must have a pump timer. Gas spa & pool heaters must have a minimum thermal efficiency of 78%. Heat pump pool heaters shall have a minimum COP of 4.0.	
Shower heads	N1112.AB.2.4	Water flow must be restricted to no more than 2.5 gallons per minute at 80 PSIG.	
Air Distribution Systems	N1110.AB	All ducts, fittings, mechanical equipment and plenum chambers shall be mechanically attached, sealed, insulated and installed in accordance with the criteria of Section N1110.AB. Ducts in unconditioned attics: R-6 min. insulation.	
HVAC Controls	N1107.AB.2	Separate readily accessible manual or automatic thermostat for each system.	
Insulation	N1104.AB.1 N1102.B.1.1	Ceilings-Min. R-19. Common walls-frame R-11 or CBS R-3 both sides. Common ceiling & floors R-11.	

ENERGY PERFORMANCE LEVEL (EPL) DISPLAY CARD

ESTIMATED ENERGY PERFORMANCE INDEX* = 69

The lower the EnergyPerformance Index, the more efficient the home.

, Lake City, FL,

1. New construction or existing		New (From Plans)
2. Single family or multiple family		Single-family
3. Number of units, if multiple family		1
4. Number of Bedrooms		3
5. Is this a worst case?		No
6. Conditioned floor area (ft²)		2619
7. Windows**	Description	Area
a. U-Factor:	Dbl, U=0.35	551.30 ft²
SHGC:	SHGC=0.27	
b. U-Factor:	N/A	ft²
SHGC:		
c. U-Factor:	N/A	ft²
SHGC:		
d. U-Factor:	N/A	ft²
SHGC:		
e. U-Factor:	N/A	ft²
SHGC:		

8. Floor Types	Insulation	Area
a. Slab-On-Grade Edge Insulation	R=0.0	2619.00 ft²
b. N/A	R=	ft²
c. N/A	R=	ft²

9. Wall Types	Insulation	Area
a. Concrete Block - Int Insul, Exterior	R=4.0	2155.30 ft²
b. N/A	R=	ft²
c. N/A	R=	ft²
d. N/A	R=	ft²

10. Ceiling Types	Insulation	Area
a. Cathedral/Single Assembly (Vented)	R=19.0	2619.00 ft²
b. N/A	R=	ft²
c. N/A	R=	ft²

11. Ducts
a. Sup: Attic Ret: Attic AH: Interior Sup. R= 6, 225 ft²

12. Cooling systems
a. Central Unit — Cap: 57.0 kBtu/hr, SEER: 13

13. Heating systems
a. Electric Heat Pump — Cap: 57.0 kBtu/hr, HSPF: 8

14. Hot water systems
a. Propane — Cap: 80 gallons, EF: 0.59

b. Conservation features
None

15. Credits — CF, Pstat

I certify that this home has complied with the Florida Energy Efficiency Code for Building Construction through the above energy saving features which will be installed (or exceeded) in this home before final inspection. Otherwise, a new EPL Display Card will be completed based on installed Code compliant features.

Builder Signature: _____ Date: _____

Address of New Home: _____ City/FL Zip: _____

*Note: The home's estimated Energy Performance Index is only available through the EnergyGauge USA - FlaRes2008 computer program. This is not a Building Energy Rating. If your Index is below 100, your home may qualify for incentives if you obtain a Florida Energy Gauge Rating. Contact the Energy Gauge Hotline at (321) 638-1492 or see the Energy Gauge web site at energygauge.com for information and a list of certified Raters. For information about Florida's Energy Efficiency Code for Building Construction, contact the Department of Community Affairs at (850) 487-1824.

**Label required by Section 13-104.4.5 of the Florida Building Code, Building, or Section B2.1.1 of Appendix G of the Florida Building Code, Residential, if not DEFAULT.

FLORIDA DEPARTMENT OF Community Affairs

DCA HOME | ABOUT DCA | DCA PROGRAMS | CONTACT DCA

BCIS Home | Log In | User Registration | Hot Topics | Submit Surcharge | Stats & Facts | Publications | FBC Staff | BCIS Site Map | Links | Search

Community Affairs

- COMMUNITY PLANNING
- HOUSING & COMMUNITY DEVELOPMENT
- EMERGENCY MANAGEMENT
- OFFICE OF THE SECRETARY

Product Approval

USER: Public User

Product Approval Menu > Product or Application Search > Application List > **Application Detail**

FL #	FL10298-R1
Application Type	Revision
Code Version	2007
Application Status	Approved
Comments	
Archived	☐
Product Manufacturer	JELD-WEN
Address/Phone/Email	3737 Lakeport Blvd Klamath Falls, OR 97601 (800) 535-3936 fbc@jeld-wen.com
Authorized Signature	Janet Gerard fbc@jeld-wen.com
Technical Representative	Steve Strawn
Address/Phone/Email	31725 Hwy 97 N. Chiloquin, OR 97624 (541) 783-2057 stevestr@jeld-wen.com
Quality Assurance Representative	
Address/Phone/Email	
Category	Windows
Subcategory	Double Hung
Compliance Method	Certification Mark or Listing
Certification Agency	Window and Door Manufacturers Association
Validated By	Window and Door Manufacturers Association

Referenced Standard and Year (of Standard)

Standard	Year
AAMA/WDMA/CSA101/I.S.2A440-05	2005
ASTM E1300	2004

Equivalence of Product Standards Certified By

Product Approval Method	Method 1 Option A
Date Submitted	05/09/2008

Date Validated	06/02/2008
Date Pending FBC Approval	07/01/2008
Date Approved	09/15/2008

Summary of Products

FL #	Model, Number or Name	Description
10298.1	Premium Siteline EX Clad Double Hung 406-H-690	Clad Double Hung 48x80
Limits of Use **Approved for use in HVHZ:** No **Approved for use outside HVHZ:** Yes **Impact Resistant:** No **Design Pressure:** +35/-35 **Other:**		**Certification Agency Certificate** FL10298_R1_C_CAC_CCL for Jeld-Wen H 4-7-08.pdf **Quality Assurance Contract Expiration Date** 03/16/2011 **Installation Instructions** FL10298_R1_II_Prem Clad SLEX DH Install [45x80] 73597.01.pdf Verified By: Window and Door Manufacturers Association Created by Independent Third Party: **Evaluation Reports** Created by Independent Third Party:
10298.2	Premium Siteline EX Clad Double Hung 406-H-699	Clad Double Hung 2 Wide
Limits of Use **Approved for use in HVHZ:** No **Approved for use outside HVHZ:** Yes **Impact Resistant:** No **Design Pressure:** +35/-35 **Other:** Clad DH 2-Wide Mullion (91x92)		**Certification Agency Certificate** FL10298_R1_C_CAC_CCL for Jeld-Wen H 1-23-08.pdf **Quality Assurance Contract Expiration Date** 03/16/2011 **Installation Instructions** FL10298_R1_II_Prem Clad SLEX Clad DH 2 Wide Mullion Install [91x92] 76547.01.pdf Verified By: Window and Door Manufacturers Association Created by Independent Third Party: **Evaluation Reports** Created by Independent Third Party:
10298.3	Premium Siteline EX Clad Double Hung 406-H-706	Clad Double Hung HP 45x80
Limits of Use **Approved for use in HVHZ:** No **Approved for use outside HVHZ:** Yes **Impact Resistant:** No **Design Pressure:** +50/-50 **Other:**		**Certification Agency Certificate** FL10298_R1_C_CAC_CCL for Jeld-Wen H 4-7-08.pdf **Quality Assurance Contract Expiration Date** 03/16/2011 **Installation Instructions** FL10298_R1_II_Prem Clad SLEX DH Install [45x80HP] 71763.02.pdf Verified By: Window and Door Manufacturers Association Created by Independent Third Party: **Evaluation Reports** Created by Independent Third Party:
10298.4	Premium Siteline EX Clad Double Hung 406-H-709	Clad Double Hung HP 37x80
Limits of Use **Approved for use in HVHZ:** No **Approved for use outside HVHZ:** Yes **Impact Resistant:** No **Design Pressure:** +50/-50 **Other:**		**Certification Agency Certificate** FL10298_R1_C_CAC_CCL for Jeld-Wen H 4-7-08.pdf **Quality Assurance Contract Expiration Date** 03/16/2011 **Installation Instructions** FL10298_R1_II_Prem Clad SLEX DH Install [37x80HP] 77371.01.pdf Verified By: Window and Door Manufacturers Association Created by Independent Third Party: **Evaluation Reports** Created by Independent Third Party:
10298.5	Premium Siteline EX Clad Double Hung 406-H-710	Clad Double Hung Triple 3(37x64)
Limits of Use **Approved for use in HVHZ:** No **Approved for use outside HVHZ:** Yes **Impact Resistant:** No **Design Pressure:** +50/-50 **Other:**		**Certification Agency Certificate** FL10298_R1_C_CAC_CCL for Jeld-Wen H 4-7-08.pdf **Quality Assurance Contract Expiration Date** 03/16/2011 **Installation Instructions** FL10298_R1_II_Prem Clad SLEX Clad DH 3 Wide Mullion Install [112x64] 77040.01.pdf Verified By: Window and Door Manufacturers Association Created by Independent Third Party: **Evaluation Reports** Created by Independent Third Party:
10298.6	Premium Siteline EX Clad Double	Clad Double Hung HP Plus 41x64

	Hung 406-H-716	
Limits of Use **Approved for use in HVHZ:** No **Approved for use outside HVHZ:** Yes **Impact Resistant:** No **Design Pressure:** +60/-60 **Other:**		**Certification Agency Certificate** FL10298_R1_C_CAC_CCL for Jeld-Wen H 4-7-08.pdf **Quality Assurance Contract Expiration Date** 03/16/2011 **Installation Instructions** FL10298_R1_II_Prem Clad SLEX DH Install [41x64HPP] 78306.01.pdf Verified By: Window and Door Manufacturers Association Created by Independent Third Party: **Evaluation Reports** Created by Independent Third Party:
10298.7	Premium Siteline EX Clad Double Hung 406-H-717	Clad Double Hung HP Plus 37x76
Limits of Use **Approved for use in HVHZ:** No **Approved for use outside HVHZ:** Yes **Impact Resistant:** No **Design Pressure:** +60/-60 **Other:**		**Certification Agency Certificate** FL10298_R1_C_CAC_CCL for Jeld-Wen H 4-7-08.pdf **Quality Assurance Contract Expiration Date** 03/16/2011 **Installation Instructions** FL10298_R1_II_Prem Clad SLEX DH Install [37x76HPP] 78305.01.pdf Verified By: Window and Door Manufacturers Association Created by Independent Third Party: **Evaluation Reports** Created by Independent Third Party:
10298.8	Premium Siteline EX Clad Double Hung HP 406-H-665	Clad Double Hung 45.375x92
Limits of Use **Approved for use in HVHZ:** No **Approved for use outside HVHZ:** Yes **Impact Resistant:** No **Design Pressure:** +35/-35 **Other:**		**Certification Agency Certificate** FL10298_R1_C_CAC_CCL for Jeld-Wen H 4-7-08.pdf **Quality Assurance Contract Expiration Date** 03/16/2011 **Installation Instructions** FL10298_R1_II_Prem Clad SLEX DH Install [45x92HP] 71758.01.pdf Verified By: Window and Door Manufacturers Association Created by Independent Third Party: **Evaluation Reports** Created by Independent Third Party:
10298.9	Premium Siteline EX Clad Double Hung HP 406-H-687	Clad Double Hung 33x80
Limits of Use **Approved for use in HVHZ:** No **Approved for use outside HVHZ:** Yes **Impact Resistant:** No **Design Pressure:** +50/-50 **Other:**		**Certification Agency Certificate** FL10298_R1_C_CAC_CCL for Jeld-Wen H 4-7-08.pdf **Quality Assurance Contract Expiration Date** 03/16/2011 **Installation Instructions** FL10298_R1_II_Prem Clad SLEX DH Install [33x80HP] 76501.01.pdf Verified By: Window and Door Manufacturers Association Created by Independent Third Party: **Evaluation Reports** Created by Independent Third Party:
10298.10	Premium Siteline EX Clad Double Hung HP 406-H-691	Clad Double Hung 45x64
Limits of Use **Approved for use in HVHZ:** No **Approved for use outside HVHZ:** Yes **Impact Resistant:** No **Design Pressure:** +50/-50 **Other:**		**Certification Agency Certificate** FL10298_R1_C_CAC_CCL for Jeld-Wen H 4-7-08.pdf **Quality Assurance Contract Expiration Date** 09/05/2011 **Installation Instructions** FL10298_R1_II_Prem Clad SLEX DH Install [45x64] 76496.01.pdf Verified By: Window and Door Manufacturers Association Created by Independent Third Party: **Evaluation Reports** Created by Independent Third Party:
10298.11	Premium Siteline EX Clad Double Hung HP 406-H-700	Clad Double Hung HP 45x92
Limits of Use **Approved for use in HVHZ:** No **Approved for use outside HVHZ:** Yes **Impact Resistant:** No **Design Pressure:** +35/-35 **Other:**		**Certification Agency Certificate** FL10298_R1_C_CAC_CCL for Jeld-Wen H 1-23-08.pdf **Quality Assurance Contract Expiration Date** 03/16/2011 **Installation Instructions** FL10298_R1_II_Prem Clad SLEX DH Install [45x92] 76547.02.pdf

		Verified By: Window and Door Manufacturers Association Created by Independent Third Party: **Evaluation Reports** Created by Independent Third Party:
10298.12	Premium Siteline EX Wood Double Hung 406-H-688	Wood Double Hung 45x92
Limits of Use **Approved for use in HVHZ:** No **Approved for use outside HVHZ:** Yes **Impact Resistant:** No **Design Pressure:** +35/-35 **Other:**		**Certification Agency Certificate** FL10298_R1_C_CAC_CCL for Jeld-Wen H 4-7-08.pdf **Quality Assurance Contract Expiration Date** 09/06/2011 **Installation Instructions** FL10298_R1_II_Prem Wood SLEX Double Hung Install [45x92] 76502.01.pdf Verified By: Window and Door Manufacturers Association Created by Independent Third Party: **Evaluation Reports** Created by Independent Third Party:
10298.13	Premium Siteline EX Wood Double Hung 406-H-703	Wood Double Hung 33x80
Limits of Use **Approved for use in HVHZ:** No **Approved for use outside HVHZ:** Yes **Impact Resistant:** No **Design Pressure:** +35/-35 **Other:**		**Certification Agency Certificate** FL10298_R1_C_CAC_CCL for Jeld-Wen H 1-23-08.pdf **Quality Assurance Contract Expiration Date** 07/06/2011 **Installation Instructions** FL10298_R1_II_Prem Wood SLEX Double Hung Install [33x80] 71790.01.pdf Verified By: Window and Door Manufacturers Association Created by Independent Third Party: **Evaluation Reports** Created by Independent Third Party:
10298.14	Premium Siteline EX Wood Double Hung 406-H-718	Wood Double Hung Standard 45x92
Limits of Use **Approved for use in HVHZ:** No **Approved for use outside HVHZ:** Yes **Impact Resistant:** No **Design Pressure:** +35/-35 **Other:**		**Certification Agency Certificate** FL10298_R1_C_CAC_CCL for Jeld-Wen H 4-7-08.pdf **Quality Assurance Contract Expiration Date** 12/20/2011 **Installation Instructions** FL10298_R1_II_Prem Wood SLEX Double Hung Install [45x92] 78304.01.pdf Verified By: Window and Door Manufacturers Association Created by Independent Third Party: **Evaluation Reports** Created by Independent Third Party:
10298.15	Premium Siteline EX Wood Double Hung 406-H-720	Wood Double Hung Twin 2(45x92)
Limits of Use **Approved for use in HVHZ:** No **Approved for use outside HVHZ:** Yes **Impact Resistant:** No **Design Pressure:** +25/-25 **Other:**		**Certification Agency Certificate** FL10298_R1_C_CAC_CCL for Jeld-Wen H 4-7-08.pdf **Quality Assurance Contract Expiration Date** 07/06/2011 **Installation Instructions** FL10298_R1_II_Prem Wood SLEX Case 2 Wide Mullion Install [91x92] 76722.01.pdf Verified By: Window and Door Manufacturers Association Created by Independent Third Party: **Evaluation Reports** Created by Independent Third Party:
10298.16	Premium Siteline EX Wood Double Hung HP 406-H-684	Wood Double Hung 45x80
Limits of Use **Approved for use in HVHZ:** No **Approved for use outside HVHZ:** Yes **Impact Resistant:** No **Design Pressure:** +35/-35 **Other:**		**Certification Agency Certificate** FL10298_R1_C_CAC_CCL for Jeld-Wen H 4-7-08.pdf **Quality Assurance Contract Expiration Date** 09/06/2011 **Installation Instructions** FL10298_R1_II_Prem Wood SLEX Double Hung Install [45x80HP] 76493.01.pdf Verified By: Window and Door Manufacturers Association Created by Independent Third Party: **Evaluation Reports** Created by Independent Third Party:
10298.17	Premium Siteline EX Wood Double Hung HP 406-H-685	Wood Double Hung 45x60
Limits of Use **Approved for use in HVHZ:** No		**Certification Agency Certificate** FL10298_R1_C_CAC_CCL for Jeld-Wen H 4-7-08.pdf

Approved for use outside HVHZ: Yes **Impact Resistant:** No **Design Pressure:** +50/-50 **Other:**		**Quality Assurance Contract Expiration Date** 09/05/2011 **Installation Instructions** FL10298_R1_II_Prem Wood SLEX Double Hung Install [45x60HP] 76499.01.pdf Verified By: Window and Door Manufacturers Association Created by Independent Third Party: **Evaluation Reports** Created by Independent Third Party:
10298.18	Premium Siteline EX Wood Double Hung HP 406-H-686	Wood Double Hung 33x80
Limits of Use **Approved for use in HVHZ:** No **Approved for use outside HVHZ:** Yes **Impact Resistant:** No **Design Pressure:** +50/-50 **Other:**		**Certification Agency Certificate** FL10298_R1_C_CAC_CCL for Jeld-Wen H 4-7-08.pdf **Quality Assurance Contract Expiration Date** 09/17/2011 **Installation Instructions** FL10298_R1_II_Prem Wood SLEX Double Hung Install [33x80HP] 76500.01.pdf Verified By: Window and Door Manufacturers Association Created by Independent Third Party: **Evaluation Reports** Created by Independent Third Party:

Back Next

Department of Community Affairs
Florida Building Code Online
Codes and Standards
2555 Shumard Oak Boulevard
Tallahassee, Florida 32399-2100
(850) 487-1824, Fax (850) 414-8436

Product Approval

USER: Public User

FL #	FL10784
Application Type	New
Code Version	2007
Application Status	Approved
Comments	
Archived	☐
Product Manufacturer	JELD-WEN
Address/Phone/Email	3737 Lakeport Blvd Klamath Falls, OR 97601 (800) 535-3936 fbc@jeld-wen.com
Authorized Signature	Janet Gerard fbc@jeld-wen.com
Technical Representative	Steve Strawn
Address/Phone/Email	31725 Hwy 97 N. Chiloquin, OR 97624 (541) 783-2057 stevestr@jeld-wen.com
Quality Assurance Representative	
Address/Phone/Email	
Category	Exterior Doors
Subcategory	Swinging Exterior Door Assemblies
Compliance Method	Certification Mark or Listing
Certification Agency	Miami-Dade BCCO - CER
Validated By	Miami-Dade BCCO - VAL

Referenced Standard and Year (of Standard)	**Standard**	**Year**
	TAS 202-94	1994

Equivalence of Product Standards Certified By	
Product Approval Method	Method 1 Option A
Date Submitted	05/21/2008
Date Validated	06/05/2008

Date Pending FBC Approval	07/09/2008
Date Approved	09/15/2008

Summary of Products

FL #	Model, Number or Name	Description
10784.1	Premium Wood Door	6'-0" x 6'-8", Opaque, Single or Double Door, In-swing
Limits of Use **Approved for use in HVHZ:** Yes **Approved for use outside HVHZ:** Yes **Impact Resistant:** No **Design Pressure:** +47/-47 **Other:** Product must be installed per manufacturers instructions as stated in NOA.		**Certification Agency Certificate** FL10784_R0_C_CAC_04-1022.06.pdf FL10784_R0_C_CAC_2007 Compliance Letter 04-1022.06.PDF **Quality Assurance Contract Expiration Date** 12/06/2010 **Installation Instructions** FL10784_R0_II_04-1022.06.pdf Verified By: Miami-Dade BCCO - CER Created by Independent Third Party: **Evaluation Reports** Created by Independent Third Party:
10784.2	Premium Wood Door	6'-0" x 6'-8", Opaque, Single or Double Door, Out-swing
Limits of Use **Approved for use in HVHZ:** Yes **Approved for use outside HVHZ:** Yes **Impact Resistant:** No **Design Pressure:** +47/-47 **Other:** Product must be installed per manufacturers instructions as stated in NOA.		**Certification Agency Certificate** FL10784_R0_C_CAC_04-1022.05.pdf FL10784_R0_C_CAC_2007 Compliance Letter 04-1022.05.PDF **Quality Assurance Contract Expiration Date** 12/06/2009 **Installation Instructions** FL10784_R0_II_04-1022.05.pdf Verified By: Miami-Dade BCCO - CER Created by Independent Third Party: **Evaluation Reports** Created by Independent Third Party:
10784.3	Premium Wood Door	6'-0" x 6'-8", Opaque, Single Door, with or without Side-lites, In-swing
Limits of Use **Approved for use in HVHZ:** Yes **Approved for use outside HVHZ:** Yes **Impact Resistant:** No **Design Pressure:** +65/-70 **Other:** Product must be installed per manufacturers instructions as stated in NOA.		**Certification Agency Certificate** FL10784_R0_C_CAC_04-0714.05.pdf **Quality Assurance Contract Expiration Date** 08/23/2009 **Installation Instructions** FL10784_R0_II_04-0714.05.pdf Verified By: Miami-Dade BCCO - CER Created by Independent Third Party: **Evaluation Reports** Created by Independent Third Party:
10784.4	Premium Wood Door	6'-0" x 6'-8", Opaque, Single Door, with or without Side-lites, Out-swing
Limits of Use **Approved for use in HVHZ:** Yes **Approved for use outside HVHZ:** Yes **Impact Resistant:** No **Design Pressure:** +60/-70 **Other:** Product must be installed per manufacturers instructions as stated in NOA.		**Certification Agency Certificate** FL10784_R0_C_CAC_04-0714.04.pdf **Quality Assurance Contract Expiration Date** 08/23/2009 **Installation Instructions** FL10784_R0_II_04-0714.04.pdf Verified By: Miami-Dade BCCO - CER Created by Independent Third Party: **Evaluation Reports** Created by Independent Third Party:
10784.5	Premium Wood Door	6'-0" x 8'-0", Opaque, Single or Double Door, In-swing
Limits of Use **Approved for use in HVHZ:** Yes **Approved for use outside HVHZ:** Yes **Impact Resistant:** No **Design Pressure:** +47/-47 **Other:** Product must be installed per manufacturers instructions as stated in NOA.		**Certification Agency Certificate** FL10784_R0_C_CAC_04-1022.06.pdf FL10784_R0_C_CAC_2007 Compliance Letter 04-1022.06.PDF **Quality Assurance Contract Expiration Date** 12/06/2010 **Installation Instructions** FL10784_R0_II_04-1022.06.pdf Verified By: Miami-Dade BCCO - CER Created by Independent Third Party: **Evaluation Reports** Created by Independent Third Party:
10784.6	Premium Wood Door	6'-0" x 8'-0", Opaque, Single or Double Door, Out-swing
Limits of Use **Approved for use in HVHZ:** Yes **Approved for use outside HVHZ:** Yes		**Certification Agency Certificate** FL10784_R0_C_CAC_04-1022.05.pdf FL10784_R0_C_CAC_2007 Compliance Letter 04-

Impact Resistant: No **Design Pressure:** +47/-47 **Other:** Product must be installed per manufacturers instructions as stated in NOA.		1022.05.PDF **Quality Assurance Contract Expiration Date** 12/06/2009 **Installation Instructions** FL10784_R0_II_04-1022.05.pdf Verified By: Miami-Dade BCCO - CER Created by Independent Third Party: **Evaluation Reports** Created by Independent Third Party:
10784.7	Premium Wood Door	6'-0" x 8'-0", Opaque, Single Door, with or without Side-lites, In-swing
Limits of Use **Approved for use in HVHZ:** Yes **Approved for use outside HVHZ:** Yes **Impact Resistant:** No **Design Pressure:** +55/-55 **Other:** Product must be installed per manufacturers instructions as stated in NOA.		**Certification Agency Certificate** FL10784_R0_C_CAC_04-0714.05.pdf **Quality Assurance Contract Expiration Date** 08/23/2009 **Installation Instructions** FL10784_R0_II_04-0714.05.pdf Verified By: Miami-Dade BCCO - CER Created by Independent Third Party: **Evaluation Reports** Created by Independent Third Party:
10784.8	Premium Wood Door	6'-0" x 8'-0", Opaque, Single Door, with or without Side-lites, Out-swing
Limits of Use **Approved for use in HVHZ:** Yes **Approved for use outside HVHZ:** Yes **Impact Resistant:** No **Design Pressure:** +55/-55 **Other:** Product must be installed per manufacturers instructions as stated in NOA.		**Certification Agency Certificate** FL10784_R0_C_CAC_04-0714.04.pdf **Quality Assurance Contract Expiration Date** 08/23/2009 **Installation Instructions** FL10784_R0_II_04-0714.04.pdf Verified By: Miami-Dade BCCO - CER Created by Independent Third Party: **Evaluation Reports** Created by Independent Third Party:
10784.9	Premium Wood Door	6'-0" x 6'-8", Full Lite or Divided Lite, Single or Double Door, In-swing
Limits of Use **Approved for use in HVHZ:** Yes **Approved for use outside HVHZ:** Yes **Impact Resistant:** No **Design Pressure:** +47/-47 **Other:** Product must be installed per manufacturers instructions as stated in NOA.		**Certification Agency Certificate** FL10784_R0_C_CAC_04-1025.06.pdf FL10784_R0_C_CAC_2007 Compliance Letter 04-1025.06.PDF **Quality Assurance Contract Expiration Date** 09/20/2010 **Installation Instructions** FL10784_R0_II_04-1025.06.pdf Verified By: Miami-Dade BCCO - CER Created by Independent Third Party: **Evaluation Reports** Created by Independent Third Party:
10784.10	Premium Wood Door	6'-0" x 6'-8", Full Lite or Divided Lite, Single or Double Door, Out-swing
Limits of Use **Approved for use in HVHZ:** Yes **Approved for use outside HVHZ:** Yes **Impact Resistant:** No **Design Pressure:** +47/-47 **Other:** Product must be installed per manufacturers instructions as stated in NOA.		**Certification Agency Certificate** FL10784_R0_C_CAC_04-0312.01.pdf **Quality Assurance Contract Expiration Date** 04/26/2009 **Installation Instructions** FL10784_R0_II_04-0312.01.pdf Verified By: Miami-Dade BCCO - CER Created by Independent Third Party: **Evaluation Reports** Created by Independent Third Party:
10784.11	Premium Wood Door	6'-0" x 6'-8", Full Lite or Divided Lite, Single Door, With or Without Side-lites, In-swing
Limits of Use **Approved for use in HVHZ:** Yes **Approved for use outside HVHZ:** Yes **Impact Resistant:** No **Design Pressure:** +55/-55 **Other:** Product must be installed per manufacturers instructions as stated in NOA.		**Certification Agency Certificate** FL10784_R0_C_CAC_04-1025.05.pdf FL10784_R0_C_CAC_2007 Compliance Letter 04-1025.05.PDF **Quality Assurance Contract Expiration Date** 09/20/2010 **Installation Instructions** FL10784_R0_II_04-1025.05.pdf Verified By: Miami-Dade BCCO - CER Created by Independent Third Party: **Evaluation Reports** Created by Independent Third Party:

10784.12	Premium Wood Door	6'-0" x 6'-8", Full Lite or Divided Lite, Single Door, With or Without Side-lites, Out-swing
Limits of Use **Approved for use in HVHZ:** Yes **Approved for use outside HVHZ:** Yes **Impact Resistant:** No **Design Pressure:** +55/-55 **Other:** Product must be installed per manufacturers instructions as stated in NOA.		**Certification Agency Certificate** FL10784_R0_C_CAC_04-1025.07.pdf FL10784_R0_C_CAC_2007 Compliance Letter 04-1025.07.PDF **Quality Assurance Contract Expiration Date** 09/27/2010 **Installation Instructions** FL10784_R0_II_04-1025.07.pdf Verified By: Miami-Dade BCCO - CER Created by Independent Third Party: **Evaluation Reports** Created by Independent Third Party:
10784.13	Premium Wood Door	6'-0" x 8'-0", Full Lite or Divided Lite, Single or Double Door, In-swing
Limits of Use **Approved for use in HVHZ:** Yes **Approved for use outside HVHZ:** Yes **Impact Resistant:** No **Design Pressure:** +32/-32 **Other:** Product must be installed per manufacturers instructions as stated in NOA.		**Certification Agency Certificate** FL10784_R0_C_CAC_04-1025.06.pdf FL10784_R0_C_CAC_2007 Compliance Letter 04-1025.06.PDF **Quality Assurance Contract Expiration Date** 09/20/2010 **Installation Instructions** FL10784_R0_II_04-1025.06.pdf Verified By: Miami-Dade BCCO - CER Created by Independent Third Party: **Evaluation Reports** Created by Independent Third Party:
10784.14	Premium Wood Door	6'-0" x 8'-0", Full Lite or Divided Lite, Single or Double Door, Out-swing
Limits of Use **Approved for use in HVHZ:** Yes **Approved for use outside HVHZ:** Yes **Impact Resistant:** No **Design Pressure:** +32/-32 **Other:** Product must be installed per manufacturers instructions as stated in NOA.		**Certification Agency Certificate** FL10784_R0_C_CAC_04-0312.01.pdf **Quality Assurance Contract Expiration Date** 04/26/2009 **Installation Instructions** FL10784_R0_II_04-0312.01.pdf Verified By: Miami-Dade BCCO - CER Created by Independent Third Party: **Evaluation Reports** Created by Independent Third Party:
10784.15	Premium Wood Door	6'-0" x 8'-0", Full Lite or Divided Lite, Single or Double Door, In-swing
Limits of Use **Approved for use in HVHZ:** Yes **Approved for use outside HVHZ:** Yes **Impact Resistant:** No **Design Pressure:** +47/-47 **Other:** Product must be installed per manufacturers instructions as stated in NOA.		**Certification Agency Certificate** FL10784_R0_C_CAC_04-1025.05.pdf FL10784_R0_C_CAC_2007 Compliance Letter 04-1025.05.PDF **Quality Assurance Contract Expiration Date** 09/20/2010 **Installation Instructions** FL10784_R0_II_04-1025.05.pdf Verified By: Miami-Dade BCCO - CER Created by Independent Third Party: **Evaluation Reports** Created by Independent Third Party:
10784.16	Premium Wood Door	6'-0" x 8'-0", Full Lite or Divided Lite, Single or Double Door, Out-swing
Limits of Use **Approved for use in HVHZ:** Yes **Approved for use outside HVHZ:** Yes **Impact Resistant:** No **Design Pressure:** +47/-47 **Other:** Product must be installed per manufacturers instructions as stated in NOA.		**Certification Agency Certificate** FL10784_R0_C_CAC_04-1025.07.pdf FL10784_R0_C_CAC_2007 Compliance Letter 04-1025.07.PDF **Quality Assurance Contract Expiration Date** 09/27/2010 **Installation Instructions** FL10784_R0_II_04-1025.07.pdf Verified By: Miami-Dade BCCO - CER Created by Independent Third Party: **Evaluation Reports** Created by Independent Third Party:

Back Next

Department of Community Affairs
Florida Building Code Online
Codes and Standards
2555 Shumard Oak Boulevard
Tallahassee, Florida 32399-2100
(850) 487-1824, Fax (850) 414-8436

wrightsoft

Project Summary
Entire House

Job: R1110119
Date: 11-18-10
By: TMN

Project Information

For: Doug Baggett
Lake City, FL
Phone: 407-235-4515

Notes: Load Calculation was obtained from an electronic copy of CAD drawing.

Design Information

Weather: Gainesville Regional AP, FL, US

Winter Design Conditions

Outside db	33	°F
Inside db	70	°F
Design TD	37	°F

Summer Design Conditions

Outside db	92	°F
Inside db	75	°F
Design TD	17	°F
Daily range	M	
Relative humidity	50	%
Moisture difference	48	gr/lb

Heating Summary

Structure	35039	Btuh
Ducts	9332	Btuh
Central vent (0 cfm)	0	Btuh
Humidification	0	Btuh
Piping	0	Btuh
Equipment load	44371	Btuh

Infiltration

Method	Simplified
Construction quality	Average
Fireplaces	1 (Average)

	Heating	Cooling
Area (ft²)	2619	2619
Volume (ft³)	***26354***	***26354***
Air changes/hour	0.37	0.16
Equiv. AVF (cfm)	161	70

Heating Equipment Summary

Make	Trane or Equivalent
Trade	Split System Heat Pump
Model	4TWR3060A1
ARI ref no.	1106434

Efficiency	8 HSPF	
Heating input		
Heating output	58000	Btuh @ 47°F
Temperature rise	28	°F
Actual air flow	1900	cfm
Air flow factor	0.043	cfm/Btuh
Static pressure	0	in H2O
Space thermostat		

Sensible Cooling Equipment Load Sizing

Structure	26918	Btuh
Ducts	11014	Btuh
Central vent (0 cfm)	0	Btuh
Blower	3413	Btuh
Use manufacturer's data	y	
Rate/swing multiplier	1.00	
Equipment sensible load	41344	Btuh

Latent Cooling Equipment Load Sizing

Structure	3106	Btuh
Ducts	2929	Btuh
Central vent (0 cfm)	0	Btuh
Equipment latent load	6035	Btuh
Equipment total load	47379	Btuh
Req. total capacity at 0.80 SHR	4.3	ton

Cooling Equipment Summary

Make	Trane or Equivalent
Trade	Split System Heat Pump
Cond	4TWR3060A1
Coil	4TEC3F60B1
ARI ref no.	1106434

Efficiency	10.8 EER, 13 SEER	
Sensible cooling	45600	Btuh
Latent cooling	11400	Btuh
Total cooling	57000	Btuh
Actual air flow	1900	cfm
Air flow factor	0.050	cfm/Btuh
Static pressure	0	in H2O
Load sensible heat ratio	0.87	

Bold/italic values have been manually overridden

Printout certified by ACCA to meet all requirements of Manual J 8th Ed.

Project Information

For: Doug Baggett
Lake City, FL
Phone: 407-235-4515

Design Conditions

Location:
Gainesville Regional AP, FL, US
Elevation: 131 ft
Latitude: 30°N

Outdoor:	**Heating**	**Cooling**
Dry bulb (°F)	33	92
Daily range (°F)	-	18 (M)
Wet bulb (°F)	-	77
Wind speed (mph)	15.0	7.5

Indoor:	**Heating**	**Cooling**
Indoor temperature (°F)	70	75
Design TD (°F)	37	17
Relative humidity (%)	30	50
Moisture difference (gr/lb)	10.4	48.5

Infiltration:

Method	Simplified
Construction quality	Average
Fireplaces	1 (Average)

Construction descriptions	Or	Area ft²	U-value Btuh/ft²-°F	Insul R ft²-°F/Btuh	Htg HTM Btuh/ft²	Loss Btuh	Clg HTM Btuh/ft²	Gain Btuh
Walls								
13A-4ocs: Blk wall, stucco ext, r-4 ext bd ins, 8" thk, 1/2" gypsum board int fnsh	ne	407	0.143	4.0	5.25	2135	2.60	1059
	se	436	0.143	4.0	5.25	2290	2.60	1136
	sw	403	0.143	4.0	5.25	2116	2.60	1049
	nw	353	0.143	4.0	5.25	1854	2.60	919
	all	1600	0.143	4.0	5.25	8395	2.60	4163
Partitions								
(none)								
Windows								
10D-b: 2 glazing, clr low-e outr, argon gas, mtl /w brk frm mat, clr innr, 1/4" gap, 1/4" thk; NFRC rated (SHGC=0.27); 50% blinds 45°, medium; 10.3 ft overhang (6.7 ft window ht, 0.5 ft sep.)	ne	80	0.350	0	12.8	1033	15.0	1208
10D-b: 2 glazing, clr low-e outr, argon gas, mtl /w brk frm mat, clr innr, 1/4" gap, 1/4" thk; NFRC rated (SHGC=0.27); 50% blinds 45°, medium; 17 ft overhang (6.7 ft window ht, 4 ft sep.)	ne	80	0.350	0	12.8	1033	15.0	1208
2 glazing, clr low-e outr, argon gas, mtl /w brk frm mat, clr innr, 1/4" gap, 1/4" thk: 2 glazing, clr low-e outr, argon gas, mtl /w brk frm mat, clr innr, 1/4" gap, 1/4" thk; NFRC rated (SHGC=0.27); 50% blinds 45°, medium; 50% outdoor insect screen; 2 ft overhang (4 ft window ht, 2 ft sep.)	ne	12	0.350	0	12.8	154	19.3	232
	se	12	0.350	0	12.8	154	16.8	201
	all	24	0.350	0	12.8	308	18.1	433
4B5-2fb: 2 glazing, clr low-e outr, argon gas, mtl /w brk frm mat, clr innr, 1/4" gap, 1/4" thk; NFRC rated (SHGC=0.27); 17 ft overhang (1.3 ft window ht, 2 ft sep.)	ne	16	0.350	0	12.8	200	24.2	377
10D-b: 2 glazing, clr low-e outr, argon gas, mtl /w brk frm mat, clr innr, 1/4" gap, 1/4" thk; NFRC rated (SHGC=0.27); 50% blinds 45°, medium; 17.3 ft overhang (6.7 ft window ht, 0.5 ft sep.)	se	20	0.350	0	12.8	258	7.18	144
2 glazing, clr low-e outr, argon gas, mtl /w brk frm mat, clr innr, 1/4" gap, 1/4" thk: 2 glazing, clr low-e outr, argon gas, mtl /w brk frm mat, clr innr, 1/4" gap, 1/4" thk; NFRC rated (SHGC=0.27); 50% blinds 45°, medium; 50% outdoor insect screen; 9.7 ft overhang (2 ft window ht, 0.5 ft sep.)	se	4	0.350	0	12.8	51	9.23	37

2 glazing, clr low-e outr, argon gas, mtl /w brk frm mat, clr innr, 1/4" gap, 1/4" thk: 2 glazing, clr low-e outr, argon gas, mtl /w brk frm mat, clr innr, 1/4" gap, 1/4" thk; NFRC rated (SHGC=0.27); 50% blinds 45°, medium; 50% outdoor insect screen; 0.5 ft overhang (4 ft window ht, 2 ft sep.)	se	8	0.350	0	12.8	103	20.2	162
10D-b: 2 glazing, clr low-e outr, argon gas, mtl /w brk frm mat, clr innr, 1/4" gap, 1/4" thk; NFRC rated (SHGC=0.27); 50% blinds 45°, medium; 13 ft overhang (6.7 ft window ht, 0.5 ft sep.)	sw	40	0.350	0	12.8	516	7.18	288
2 glazing, clr low-e outr, argon gas, mtl /w brk frm mat, clr innr, 1/4" gap, 1/4" thk: 2 glazing, clr low-e outr, argon gas, mtl /w brk frm mat, clr innr, 1/4" gap, 1/4" thk; NFRC rated (SHGC=0.27); 50% blinds 45°, medium; 50% outdoor insect screen; 9.7 ft overhang (6 ft window ht, 0.5 ft sep.)	sw	72	0.350	0	12.8	925	9.23	664
	nw	36	0.350	0	12.8	462	19.3	696
	all	108	0.350	0	12.8	1387	12.6	1360
2 glazing, clr low-e outr, argon gas, mtl /w brk frm mat, clr innr, 1/4" gap, 1/4" thk: 2 glazing, clr low-e outr, argon gas, mtl /w brk frm mat, clr innr, 1/4" gap, 1/4" thk; NFRC rated (SHGC=0.27); 50% blinds 45°, medium; 50% outdoor insect screen; 13 ft overhang (6 ft window ht, 0.5 ft sep.)	sw	72	0.350	0	12.8	925	9.23	664
4B5-2fb: 2 glazing, clr low-e outr, argon gas, mtl /w brk frm mat, clr innr, 1/4" gap, 1/4" thk; NFRC rated (SHGC=0.27); 13 ft overhang (1.3 ft window ht, 0.5 ft sep.)	sw	8	0.350	0	12.8	100	11.6	91
10D-b: 2 glazing, clr low-e outr, argon gas, mtl /w brk frm mat, clr innr, 1/4" gap, 1/4" thk; NFRC rated (SHGC=0.27); 50% blinds 45°, medium; 9.7 ft overhang (6.7 ft window ht, 0.5 ft sep.)	nw	20	0.350	0	12.8	258	15.0	302
10D-b: 2 glazing, clr low-e outr, argon gas, mtl /w brk frm mat, clr innr, 1/4" gap, 1/4" thk; NFRC rated (SHGC=0.27); 50% blinds 45°, medium; 50% outdoor insect screen; 9.7 ft overhang (6.7 ft window ht, 0.5 ft sep.)	nw	20	0.350	0	12.8	258	13.5	272
2 glazing, clr low-e outr, argon gas, mtl /w brk frm mat, clr innr, 1/4" gap, 1/4" thk: 2 glazing, clr low-e outr, argon gas, mtl /w brk frm mat, clr innr, 1/4" gap, 1/4" thk; NFRC rated (SHGC=0.27); 50% blinds 45°, medium; 50% outdoor insect screen; 4.3 ft overhang (3 ft window ht, 0.5 ft sep.)	nw	9	0.350	0	12.8	116	19.3	174
2 glazing, clr low-e outr, argon gas, mtl /w brk frm mat, clr innr, 1/4" gap, 1/4" thk: 2 glazing, clr low-e outr, argon gas, mtl /w brk frm mat, clr innr, 1/4" gap, 1/4" thk; NFRC rated (SHGC=0.27); 50% blinds 45°, medium; 50% outdoor insect screen; 6 ft overhang (3 ft window ht, 0.5 ft sep.)	nw	18	0.350	0	12.8	231	19.3	348
2 glazing, clr low-e outr, argon gas, mtl /w brk frm mat, clr innr, 1/4" gap, 1/4" thk: 2 glazing, clr low-e outr, argon gas, mtl /w brk frm mat, clr innr, 1/4" gap, 1/4" thk; NFRC rated (SHGC=0.27); 50% blinds 45°, medium; 50% outdoor insect screen; 0.5 ft overhang (4 ft window ht, 0.5 ft sep.)	nw	12	0.350	0	12.8	154	19.3	232
2 glazing, clr low-e outr, argon gas, mtl /w brk frm mat, clr innr, 1/4" gap, 1/4" thk: 2 glazing, clr low-e outr, argon gas, mtl /w brk frm mat, clr innr, 1/4" gap, 1/4" thk; NFRC rated (SHGC=0.27); 50% blinds 45°, medium; 50% outdoor insect screen; 12.7 ft overhang (4 ft window ht, 0.5 ft sep.)	nw	12	0.350	0	12.8	154	19.3	232

Doors
(none)

Ceilings

16B-19md: Attic ceiling, mtl roof mat, r-19 ceil ins, 5/8" gypsum board int fnsh	2619	0.049	19.0	1.80	4709	2.59	6788

Floors

22A-cpl: Bg floor, light dry soil, carpet flr fnsh	231	0.989	0	36.3	8397	0	0

wrightsoft

Right-J® Worksheet
Entire House

Job: R1110119
Date: 11-18-10
By: TMN

		Entire House	Bonus
1	Room name		
2	Exposed wall	231.3 ft	32.3 ft
3	Ceiling height	9.3 ft	9.3 ft
4	Room dimensions		heat/cool 15.7 x 10.0 ft
5	Room area	2618.7 ft²	156.7 ft²

	Ty	Construction number	U-value (Btuh/ft²-°F)	Or	HTM (Btuh/ft²) Heat	HTM (Btuh/ft²) Cool	Area (ft²) or perimeter (ft) Gross	N/P/S	Load (Btuh) Heat	Load (Btuh) Cool	Area (ft²) or perimeter (ft) Gross	N/P/S	Load (Btuh) Heat	Load (Btuh) Cool
6	W	13A-4ocs	0.143	ne	5.25	2.60	595	407	2135	1059	93	81	425	211
.	G	10D-b	0.350	ne	12.85	15.03	80	0	1033	1208	0	0	0	0
.	G	10D-b	0.350	ne	12.85	15.03	80	0	1033	1208	0	0	0	0
.	G	2 glazing, clr low-e	0.350	ne	12.85	19.32	12	0	154	232	12	0	154	232
11	G	4B5-2fb	0.350	ne	12.85	24.16	16	0	200	377	0	0	0	0
	W	13A-4ocs	0.143	se	5.25	2.60	481	436	2290	1136	146	134	702	348
	G	10D-b	0.350	se	12.85	7.18	20	20	258	144	0	0	0	0
	G	2 glazing, clr low-e	0.350	se	12.85	9.23	4	4	51	37	0	0	0	0
	G	2 glazing, clr low-e	0.350	se	12.85	20.25	8	0	103	162	0	0	0	0
	G	2 glazing, clr low-e	0.350	se	12.85	16.78	12	4	154	201	12	4	154	201
	W	13A-4ocs	0.143	sw	5.25	2.60	595	403	2116	1049	62	62	325	161
	G	10D-b	0.350	sw	12.85	7.18	40	40	516	288	0	0	0	0
	G	2 glazing, clr low-e	0.350	sw	12.85	9.23	72	72	925	664	0	0	0	0
	G	2 glazing, clr low-e	0.350	sw	12.85	9.23	72	72	925	664	0	0	0	0
	G	4B5-2fb	0.350	sw	12.85	11.60	8	8	100	91	0	0	0	0
	W	13A-4ocs	0.143	nw	5.25	2.60	481	353	1854	919	0	0	0	0
	G	10D-b	0.350	nw	12.85	15.03	20	0	258	302	0	0	0	0
	G	10D-b	0.350	nw	12.85	13.53	20	0	258	272	0	0	0	0
	G	2 glazing, clr low-e	0.350	nw	12.85	19.32	9	0	116	174	0	0	0	0
	G	2 glazing, clr low-e	0.350	nw	12.85	19.32	18	0	231	348	0	0	0	0
	G	2 glazing, clr low-e	0.350	nw	12.85	19.32	12	0	154	232	0	0	0	0
	G	2 glazing, clr low-e	0.350	nw	12.85	19.32	12	0	154	232	0	0	0	0
	G	2 glazing, clr low-e	0.350	nw	12.85	19.32	36	0	462	696	0	0	0	0
	C	16B-19md	0.049	-	1.80	2.59	2619	2619	4709	6788	157	157	282	406
	F	22A-cpl	0.989	-	36.30	0.00	2619	231	8397	0	157	32	1174	0

6	c) AED excursion							2498					39
	Envelope loss/gain					28588	20982				3216	1598
12	a) Infiltration					6451	1316				902	184
	b) Room ventilation					0	0				0	0
13	Internal gains:	Occupants @	230	4			920	0				0
		Appliances/other					3700					500
	Subtotal (lines 6 to 13)					35039	26918				4117	2282
	Less external load					0	0				0	0
	Less transfer					0	0				0	0
	Redistribution					0	0				0	0
14	Subtotal					35039	26918				4117	2282
15	Duct loads			27%	41%	9332	11014	27%	41%		1097	934
	Total room load					44371	37931				5214	3216
	Air required (cfm)					1900	1900				223	161

Printout certified by ACCA to meet all requirements of Manual J 8th Ed.

wrightsoft

Right-J® Worksheet
Entire House

Job: R1110119
Date: 11-18-10
By: TMN

							Bed2				Bath2			
1	Room name						Bed2				Bath2			
2	Exposed wall						22.3 ft				0 ft			
3	Ceiling height						9.3 ft		heat/cool		9.3 ft		heat/cool	
4	Room dimensions						1.0 x 228.4 ft				8.3 x 6.7 ft			
5	Room area						228.4 ft²				55.6 ft²			
	Ty	Construction number	U-value (Btuh/ft²-°F)	Or	HTM (Btuh/ft²)		Area (ft²) or perimeter (ft)		Load (Btuh)		Area (ft²) or perimeter (ft)		Load (Btuh)	
					Heat	Cool	Gross	N/P/S	Heat	Cool	Gross	N/P/S	Heat	Cool
6	W	13A-4ocs	0.143	ne	5.25	2.60	121	81	424	210	0	0	0	0
.	G	10D-b	0.350	ne	12.85	15.03	40	0	516	604	0	0	0	0
.	G	10D-b	0.350	ne	12.85	15.03	0	0	0	0	0	0	0	0
.	G	2 glazing, clr low-e	0.350	ne	12.85	19.32	0	0	0	0	0	0	0	0
11	G	4B5-2fb	0.350	ne	12.85	24.16	0	0	0	0	0	0	0	0
	W	13A-4ocs	0.143	se	5.25	2.60	62	54	283	141	0	0	0	0
	G	10D-b	0.350	se	12.85	7.18	0	0	0	0	0	0	0	0
	G	2 glazing, clr low-e	0.350	se	12.85	9.23	0	0	0	0	0	0	0	0
	G	2 glazing, clr low-e	0.350	se	12.85	20.25	8	0	103	162	0	0	0	0
	G	2 glazing, clr low-e	0.350	se	12.85	16.78	0	0	0	0	0	0	0	0
	W	13A-4ocs	0.143	sw	5.25	2.60	0	0	0	0	0	0	0	0
	G	10D-b	0.350	sw	12.85	7.18	0	0	0	0	0	0	0	0
	G	2 glazing, clr low-e	0.350	sw	12.85	9.23	0	0	0	0	0	0	0	0
	G	2 glazing, clr low-e	0.350	sw	12.85	9.23	0	0	0	0	0	0	0	0
	G	4B5-2fb	0.350	sw	12.85	11.60	0	0	0	0	0	0	0	0
	W	13A-4ocs	0.143	nw	5.25	2.60	25	25	130	65	0	0	0	0
	G	10D-b	0.350	nw	12.85	15.03	0	0	0	0	0	0	0	0
	G	10D-b	0.350	nw	12.85	13.53	0	0	0	0	0	0	0	0
	G	2 glazing, clr low-e	0.350	nw	12.85	19.32	0	0	0	0	0	0	0	0
	G	2 glazing, clr low-e	0.350	nw	12.85	19.32	0	0	0	0	0	0	0	0
	G	2 glazing, clr low-e	0.350	nw	12.85	19.32	0	0	0	0	0	0	0	0
	G	2 glazing, clr low-e	0.350	nw	12.85	19.32	0	0	0	0	0	0	0	0
	G	2 glazing, clr low-e	0.350	nw	12.85	19.32	0	0	0	0	0	0	0	0
	C	16B-19md	0.049	-	1.80	2.59	228	228	411	592	56	56	100	144
	F	22A-cpl	0.989	-	36.30	0.00	228	22	811	0	56	0	0	0
6	c) AED excursion									-55				-4
	Envelope loss/gain								2678	1718			100	140
12	a) Infiltration								623	127			0	0
	b) Room ventilation								0	0			0	0
13	Internal gains:		Occupants @		230		1			230	0			0
			Appliances/other							0				0
	Subtotal (lines 6 to 13)								3300	2075			100	140
	Less external load								0	0			0	0
	Less transfer								0	0			0	0
	Redistribution								0	0			0	0
14	Subtotal								3300	2075			100	140
15	Duct loads						27%	41%	879	849	27%	41%	27	57
	Total room load								4179	2924			127	198
	Air required (cfm)								179	146			5	10

Printout certified by ACCA to meet all requirements of Manual J 8th Ed.

Right-J® Worksheet
Entire House

Job: R1110119
Date: 11-18-10
By: TMN

1 2 3 4 5	Room name Exposed wall Ceiling height Room dimensions Room area						Hall 8.0 ft 9.3 ft heat/cool 1.0 x 79.1 ft 79.1 ft²				Bath3 7.3 ft 9.3 ft heat/cool 8.0 x 9.0 ft 72.0 ft²			
	Ty	Construction number	U-value (Btuh/ft²-°F)	Or	HTM (Btuh/ft²)		Area (ft²) or perimeter (ft)		Load (Btuh)		Area (ft²) or perimeter (ft)		Load (Btuh)	
					Heat	Cool	Gross	N/P/S	Heat	Cool	Gross	N/P/S	Heat	Cool
6	W	13A-4ocs	0.143	ne	5.25	2.60	0	0	0	0	0	0	0	0
.	G	10D-b	0.350	ne	12.85	15.03	0	0	0	0	0	0	0	0
.	G	10D-b	0.350	ne	12.85	15.03	0	0	0	0	0	0	0	0
.	G	2 glazing, clr low-e	0.350	ne	12.85	19.32	0	0	0	0	0	0	0	0
11	G	4B5-2fb	0.350	ne	12.85	24.16	0	0	0	0	0	0	0	0
	W	13A-4ocs	0.143	se	5.25	2.60	47	26	139	69	68	64	337	167
	G	10D-b	0.350	se	12.85	7.18	20	20	258	144	0	0	0	0
	G	2 glazing, clr low-e	0.350	se	12.85	9.23	0	0	0	0	4	4	51	37
	G	2 glazing, clr low-e	0.350	se	12.85	20.25	0	0	0	0	0	0	0	0
	G	2 glazing, clr low-e	0.350	se	12.85	16.78	0	0	0	0	0	0	0	0
	W	13A-4ocs	0.143	sw	5.25	2.60	28	28	146	73	0	0	0	0
	G	10D-b	0.350	sw	12.85	7.18	0	0	0	0	0	0	0	0
	G	2 glazing, clr low-e	0.350	sw	12.85	9.23	0	0	0	0	0	0	0	0
	G	2 glazing, clr low-e	0.350	sw	12.85	9.23	0	0	0	0	0	0	0	0
	G	4B5-2fb	0.350	sw	12.85	11.60	0	0	0	0	0	0	0	0
	W	13A-4ocs	0.143	nw	5.25	2.60	0	0	0	0	0	0	0	0
	G	10D-b	0.350	nw	12.85	15.03	0	0	0	0	0	0	0	0
	G	10D-b	0.350	nw	12.85	13.53	0	0	0	0	0	0	0	0
	G	2 glazing, clr low-e	0.350	nw	12.85	19.32	0	0	0	0	0	0	0	0
	G	2 glazing, clr low-e	0.350	nw	12.85	19.32	0	0	0	0	0	0	0	0
	G	2 glazing, clr low-e	0.350	nw	12.85	19.32	0	0	0	0	0	0	0	0
	G	2 glazing, clr low-e	0.350	nw	12.85	19.32	0	0	0	0	0	0	0	0
	G	2 glazing, clr low-e	0.350	nw	12.85	19.32	0	0	0	0	0	0	0	0
	C	16B-19md	0.049	-	1.80	2.59	79	79	142	205	72	72	129	187
	F	22A-cpl	0.989	-	36.30	0.00	79	8	290	0	72	7	266	0
6	c) AED excursion									-14				-11
	Envelope loss/gain								976	477			784	379
12	a) Infiltration b) Room ventilation								223 0	45 0			204 0	42 0
13	Internal gains:		Occupants @ Appliances/other		230		0			0 0	0			0 0
	Subtotal (lines 6 to 13)								1199	522			988	421
   14 15	Less external load Less transfer Redistribution Subtotal Duct loads						27%	41%	0 0 0 1199 319	0 0 0 522 214	27%	41%	0 0 0 988 263	0 0 0 421 172
	Total room load Air required (cfm)								1518 65	736 37			1252 54	593 30

Printout certified by ACCA to meet all requirements of Manual J 8th Ed.

Right-J® Worksheet
Entire House

Job: R1110119
Date: 11-18-10
By: TMN

1 2 3 4 5	Room name Exposed wall Ceiling height Room dimensions Room area						ah 0 ft 9.3 ft heat/cool 3.0 x 4.3 ft 13.0 ft²				Bed3 27.7 ft 9.3 ft heat/cool 1.0 x 212.8 ft 212.8 ft²			
	Ty	Construction number	U-value (Btuh/ft²-°F)	Or	HTM (Btuh/ft²)		Area (ft²) or perimeter (ft)		Load (Btuh)		Area (ft²) or perimeter (ft)		Load (Btuh)	
					Heat	Cool	Gross	N/P/S	Heat	Cool	Gross	N/P/S	Heat	Cool
6	W	13A-4ocs	0.143	ne	5.25	2.60	0	0	0	0	0	0	0	0
.	G	10D-b	0.350	ne	12.85	15.03	0	0	0	0	0	0	0	0
.	G	10D-b	0.350	ne	12.85	15.03	0	0	0	0	0	0	0	0
.	G	2 glazing, clr low-e	0.350	ne	12.85	19.32	0	0	0	0	0	0	0	0
11	G	4B5-2fb	0.350	ne	12.85	24.16	0	0	0	0	0	0	0	0
	W	13A-4ocs	0.143	se	5.25	2.60	0	0	0	0	133	133	700	347
	G	10D-b	0.350	se	12.85	7.18	0	0	0	0	0	0	0	0
	G	2 glazing, clr low-e	0.350	se	12.85	9.23	0	0	0	0	0	0	0	0
	G	2 glazing, clr low-e	0.350	se	12.85	20.25	0	0	0	0	0	0	0	0
	G	2 glazing, clr low-e	0.350	se	12.85	16.78	0	0	0	0	0	0	0	0
	W	13A-4ocs	0.143	sw	5.25	2.60	0	0	0	0	124	88	462	229
	G	10D-b	0.350	sw	12.85	7.18	0	0	0	0	0	0	0	0
	G	2 glazing, clr low-e	0.350	sw	12.85	9.23	0	0	0	0	36	36	462	332
	G	2 glazing, clr low-e	0.350	sw	12.85	9.23	0	0	0	0	0	0	0	0
	G	4B5-2fb	0.350	sw	12.85	11.60	0	0	0	0	0	0	0	0
	W	13A-4ocs	0.143	nw	5.25	2.60	0	0	0	0	0	0	0	0
	G	10D-b	0.350	nw	12.85	15.03	0	0	0	0	0	0	0	0
	G	10D-b	0.350	nw	12.85	13.53	0	0	0	0	0	0	0	0
	G	2 glazing, clr low-e	0.350	nw	12.85	19.32	0	0	0	0	0	0	0	0
	G	2 glazing, clr low-e	0.350	nw	12.85	19.32	0	0	0	0	0	0	0	0
	G	2 glazing, clr low-e	0.350	nw	12.85	19.32	0	0	0	0	0	0	0	0
	G	2 glazing, clr low-e	0.350	nw	12.85	19.32	0	0	0	0	0	0	0	0
	G	2 glazing, clr low-e	0.350	nw	12.85	19.32	0	0	0	0	0	0	0	0
	C	16B-19md	0.049	-	1.80	2.59	13	13	23	34	213	213	383	552
	F	22A-cpl	0.989	-	36.30	0.00	13	0	0	0	213	28	1004	0
6	c) AED excursion									-1				357
	Envelope loss/gain								23	33			3011	1816
12	a) Infiltration b) Room ventilation								0 0	0 0			772 0	157 0
13	Internal gains:		Occupants @ Appliances/other		230		0			0 0	1			230 0
	Subtotal (lines 6 to 13)								23	33			3782	2204
   14 15	Less external load Less transfer Redistribution Subtotal Duct loads						27%	41%	0 0 0 23 6	0 0 0 33 13	27%	41%	0 0 0 3782 1007	0 0 0 2204 902
	Total room load Air required (cfm)								30 1	46 2			4789 205	3105 156

Printout certified by ACCA to meet all requirements of Manual J 8th Ed.

wrightsoft

Right-J® Worksheet
Entire House

Job: R1110119
Date: 11-18-10
By: TMN

	Ty	Construction number	U-value (Btuh/ft²-°F)	Or	HTM (Btuh/ft²) Heat	HTM (Btuh/ft²) Cool	Living Rm Area (ft²) or perimeter (ft) Gross	Living Rm Area (ft²) or perimeter (ft) N/P/S	Living Rm Load (Btuh) Heat	Living Rm Load (Btuh) Cool	Kitchen Area (ft²) or perimeter (ft) Gross	Kitchen Area (ft²) or perimeter (ft) N/P/S	Kitchen Load (Btuh) Heat	Kitchen Load (Btuh) Cool
1	Room name						Living Rm				Kitchen			
2	Exposed wall						22.7 ft				0 ft			
3	Ceiling height						9.3 ft heat/cool				9.3 ft heat/cool			
4	Room dimensions						19.0 x 22.7 ft				13.7 x 22.7 ft			
5	Room area						430.7 ft²				309.8 ft²			
6	W	13A-4ocs	0.143	ne	5.25	2.60	0	0	0	0	0	0	0	0
.	G	10D-b	0.350	ne	12.85	15.03	0	0	0	0	0	0	0	0
.	G	10D-b	0.350	ne	12.85	15.03	0	0	0	0	0	0	0	0
.	G	2 glazing, clr low-e	0.350	ne	12.85	19.32	0	0	0	0	0	0	0	0
11	G	4B5-2fb	0.350	ne	12.85	24.16	0	0	0	0	0	0	0	0
	W	13A-4ocs	0.143	se	5.25	2.60	0	0	0	0	0	0	0	0
	G	10D-b	0.350	se	12.85	7.18	0	0	0	0	0	0	0	0
	G	2 glazing, clr low-e	0.350	se	12.85	9.23	0	0	0	0	0	0	0	0
	G	2 glazing, clr low-e	0.350	se	12.85	20.25	0	0	0	0	0	0	0	0
	G	2 glazing, clr low-e	0.350	se	12.85	16.78	0	0	0	0	0	0	0	0
	W	13A-4ocs	0.143	sw	5.25	2.60	211	91	477	236	0	0	0	0
	G	10D-b	0.350	sw	12.85	7.18	40	40	516	288	0	0	0	0
	G	2 glazing, clr low-e	0.350	sw	12.85	9.23	0	0	0	0	0	0	0	0
	G	2 glazing, clr low-e	0.350	sw	12.85	9.23	72	72	925	664	0	0	0	0
	G	4B5-2fb	0.350	sw	12.85	11.60	8	8	100	91	0	0	0	0
	W	13A-4ocs	0.143	nw	5.25	2.60	0	0	0	0	0	0	0	0
	G	10D-b	0.350	nw	12.85	15.03	0	0	0	0	0	0	0	0
	G	10D-b	0.350	nw	12.85	13.53	0	0	0	0	0	0	0	0
	G	2 glazing, clr low-e	0.350	nw	12.85	19.32	0	0	0	0	0	0	0	0
	G	2 glazing, clr low-e	0.350	nw	12.85	19.32	0	0	0	0	0	0	0	0
	G	2 glazing, clr low-e	0.350	nw	12.85	19.32	0	0	0	0	0	0	0	0
	G	2 glazing, clr low-e	0.350	nw	12.85	19.32	0	0	0	0	0	0	0	0
	G	2 glazing, clr low-e	0.350	nw	12.85	19.32	0	0	0	0	0	0	0	0
	C	16B-19md	0.049	-	1.80	2.59	431	431	774	1116	310	310	557	803
	F	22A-cpl	0.989	-	36.30	0.00	431	23	823	0	310	0	0	0
6	c) AED excursion									868				-68
	Envelope loss/gain								3615	3264			557	735
12	a) Infiltration								632	129			0	0
	b) Room ventilation								0	0			0	0
13	Internal gains:		Occupants @		230		0			0	0			0
			Appliances/other							900				1800
	Subtotal (lines 6 to 13)								4247	4293			557	2535
	Less external load								0	0			0	0
	Less transfer								0	0			0	0
	Redistribution								0	0			0	0
14	Subtotal								4247	4293			557	2535
15	Duct loads						27%	41%	1131	1757	27%	41%	148	1037
	Total room load								5378	6050			705	3573
	Air required (cfm)								230	303			30	179

wrightsoft

Right-J® Worksheet
Entire House

Job: R1110119
Date: 11-18-10
By: TMN

		Dining	Master Bed
1	Room name	Dining	Master Bed
2	Exposed wall	22.0 ft	41.0 ft
3	Ceiling height	9.3 ft heat/cool	9.3 ft heat/cool
4	Room dimensions	1.0 x 302.0 ft	1.0 x 356.4 ft
5	Room area	302.0 ft²	356.4 ft²

	Ty	Construction number	U-value (Btuh/ft²-°F)	Or	HTM (Btuh/ft²) Heat	HTM (Btuh/ft²) Cool	Dining Area (ft²) or perimeter (ft) Gross	Dining N/P/S	Dining Load (Btuh) Heat	Dining Load (Btuh) Cool	Master Bed Area (ft²) or perimeter (ft) Gross	Master Bed N/P/S	Master Bed Load (Btuh) Heat	Master Bed Load (Btuh) Cool
6	W	13A-4ocs	0.143	ne	5.25	2.60	205	109	570	283	161	121	635	315
	G	10D-b	0.350	ne	12.85	15.03	0	0	0	0	40	0	516	604
	G	10D-b	0.350	ne	12.85	15.03	80	0	1033	1208	0	0	0	0
	G	2 glazing, clr low-e	0.350	ne	12.85	19.32	0	0	0	0	0	0	0	0
11	G	4B5-2fb	0.350	ne	12.85	24.16	16	0	200	377	0	0	0	0
	W	13A-4ocs	0.143	se	5.25	2.60	0	0	0	0	25	25	130	65
	G	10D-b	0.350	se	12.85	7.18	0	0	0	0	0	0	0	0
	G	2 glazing, clr low-e	0.350	se	12.85	9.23	0	0	0	0	0	0	0	0
	G	2 glazing, clr low-e	0.350	se	12.85	20.25	0	0	0	0	0	0	0	0
	G	2 glazing, clr low-e	0.350	se	12.85	16.78	0	0	0	0	0	0	0	0
	W	13A-4ocs	0.143	sw	5.25	2.60	0	0	0	0	0	0	0	0
	G	10D-b	0.350	sw	12.85	7.18	0	0	0	0	0	0	0	0
	G	2 glazing, clr low-e	0.350	sw	12.85	9.23	0	0	0	0	0	0	0	0
	G	2 glazing, clr low-e	0.350	sw	12.85	9.23	0	0	0	0	0	0	0	0
	G	4B5-2fb	0.350	sw	12.85	11.60	0	0	0	0	0	0	0	0
	W	13A-4ocs	0.143	nw	5.25	2.60	0	0	0	0	195	151	794	394
	G	10D-b	0.350	nw	12.85	15.03	0	0	0	0	0	0	0	0
	G	10D-b	0.350	nw	12.85	13.53	0	0	0	0	20	0	258	272
	G	2 glazing, clr low-e	0.350	nw	12.85	19.32	0	0	0	0	0	0	0	0
	G	2 glazing, clr low-e	0.350	nw	12.85	19.32	0	0	0	0	0	0	0	0
	G	2 glazing, clr low-e	0.350	nw	12.85	19.32	0	0	0	0	12	0	154	232
	G	2 glazing, clr low-e	0.350	nw	12.85	19.32	0	0	0	0	12	0	154	232
	G	2 glazing, clr low-e	0.350	nw	12.85	19.32	0	0	0	0	0	0	0	0
	C	16B-19md	0.049	-	1.80	2.59	302	302	543	783	356	356	641	924
	F	22A-cpl	0.989	-	36.30	0.00	302	22	799	0	356	41	1488	0

6	c) AED excursion									-72				237
	Envelope loss/gain								3145	2579			4771	3273
12	a) Infiltration								613	125			1143	233
	b) Room ventilation								0	0			0	0
13	Internal gains:	Occupants @	230				0			0	2			460
		Appliances/other								0				0
	Subtotal (lines 6 to 13)								3758	2704			5914	3967
	Less external load								0	0			0	0
	Less transfer								0	0			0	0
	Redistribution								0	0			0	0
14	Subtotal								3758	2704			5914	3967
15	Duct loads						27%	41%	1001	1106	27%	41%	1575	1623
	Total room load								4759	3810			7489	5590
	Air required (cfm)								204	191			321	280

Printout certified by ACCA to meet all requirements of Manual J 8th Ed.

Right-J® Worksheet
Entire House

Job: R1110119
Date: 11-18-10
By: TMN

							Wic1				Wic2			
1	Room name						Wic1				Wic2			
2	Exposed wall						0 ft				0 ft			
3	Ceiling height						9.3 ft		heat/cool		9.3 ft		heat/cool	
4	Room dimensions						7.0 x 6.0 ft				7.3 x 6.0 ft			
5	Room area						42.0 ft²				44.0 ft²			
	Ty	Construction number	U-value (Btuh/ft²-°F)	Or	HTM (Btuh/ft²)		Area (ft²) or perimeter (ft)		Load (Btuh)		Area (ft²) or perimeter (ft)		Load (Btuh)	
					Heat	Cool	Gross	N/P/S	Heat	Cool	Gross	N/P/S	Heat	Cool
6	W	13A-4ocs	0.143	ne	5.25	2.60	0	0	0	0	0	0	0	0
.	G	10D-b	0.350	ne	12.85	15.03	0	0	0	0	0	0	0	0
.	G	10D-b	0.350	ne	12.85	15.03	0	0	0	0	0	0	0	0
.	G	2 glazing, clr low-e	0.350	ne	12.85	19.32	0	0	0	0	0	0	0	0
11	G	4B5-2fb	0.350	ne	12.85	24.16	0	0	0	0	0	0	0	0
	W	13A-4ocs	0.143	se	5.25	2.60	0	0	0	0	0	0	0	0
	G	10D-b	0.350	se	12.85	7.18	0	0	0	0	0	0	0	0
	G	2 glazing, clr low-e	0.350	se	12.85	9.23	0	0	0	0	0	0	0	0
	G	2 glazing, clr low-e	0.350	se	12.85	20.25	0	0	0	0	0	0	0	0
	G	2 glazing, clr low-e	0.350	se	12.85	16.78	0	0	0	0	0	0	0	0
	W	13A-4ocs	0.143	sw	5.25	2.60	0	0	0	0	0	0	0	0
	G	10D-b	0.350	sw	12.85	7.18	0	0	0	0	0	0	0	0
	G	2 glazing, clr low-e	0.350	sw	12.85	9.23	0	0	0	0	0	0	0	0
	G	2 glazing, clr low-e	0.350	sw	12.85	9.23	0	0	0	0	0	0	0	0
	G	4B5-2fb	0.350	sw	12.85	11.60	0	0	0	0	0	0	0	0
	W	13A-4ocs	0.143	nw	5.25	2.60	0	0	0	0	0	0	0	0
	G	10D-b	0.350	nw	12.85	15.03	0	0	0	0	0	0	0	0
	G	10D-b	0.350	nw	12.85	13.53	0	0	0	0	0	0	0	0
	G	2 glazing, clr low-e	0.350	nw	12.85	19.32	0	0	0	0	0	0	0	0
	G	2 glazing, clr low-e	0.350	nw	12.85	19.32	0	0	0	0	0	0	0	0
	G	2 glazing, clr low-e	0.350	nw	12.85	19.32	0	0	0	0	0	0	0	0
	G	2 glazing, clr low-e	0.350	nw	12.85	19.32	0	0	0	0	0	0	0	0
	G	2 glazing, clr low-e	0.350	nw	12.85	19.32	0	0	0	0	0	0	0	0
	C	16B-19md	0.049	-	1.80	2.59	42	42	76	109	44	44	79	114
	F	22A-cpl	0.989	-	36.30	0.00	42	0	0	0	44	0	0	0
6	c) AED excursion									-3				-3
	Envelope loss/gain								76	106			79	111
12	a) Infiltration								0	0			0	0
	b) Room ventilation								0	0			0	0
13	Internal gains:		Occupants @		230		0			0	0			0
			Appliances/other							0				0
	Subtotal (lines 6 to 13)								76	106			79	111
	Less external load								0	0			0	0
	Less transfer								0	0			0	0
	Redistribution								0	0			0	0
14	Subtotal								76	106			79	111
15	Duct loads						27%	41%	20	43	27%	41%	21	45
	Total room load								96	149			100	157
	Air required (cfm)								4	7			4	8

Printout certified by ACCA to meet all requirements of Manual J 8th Ed.

wrightsoft

Right-J® Worksheet
Entire House

Job: R1110119
Date: 11-18-10
By: TMN

		Study	MBath
1	Room name	Study	MBath
2	Exposed wall	27.3 ft	20.7 ft
3	Ceiling height	9.3 ft heat/cool	9.3 ft heat/cool
4	Room dimensions	14.3 x 13.0 ft	1.0 x 129.9 ft
5	Room area	186.3 ft²	129.9 ft²

	Ty	Construction number	U-value (Btuh/ft²-°F)	Or	HTM (Btuh/ft²) Heat	HTM (Btuh/ft²) Cool	Study Area (ft²) or perimeter (ft) Gross	Study N/P/S	Study Load (Btuh) Heat	Study Load (Btuh) Cool	MBath Area (ft²) or perimeter (ft) Gross	MBath N/P/S	MBath Load (Btuh) Heat	MBath Load (Btuh) Cool
6	W	13A-4ocs	0.143	ne	5.25	2.60	0	0	0	0	16	16	81	40
.	G	10D-b	0.350	ne	12.85	15.03	0	0	0	0	0	0	0	0
.	G	10D-b	0.350	ne	12.85	15.03	0	0	0	0	0	0	0	0
.	G	2 glazing, clr low-e	0.350	ne	12.85	19.32	0	0	0	0	0	0	0	0
11	G	4B5-2fb	0.350	ne	12.85	24.16	0	0	0	0	0	0	0	0
	W	13A-4ocs	0.143	se	5.25	2.60	0	0	0	0	0	0	0	0
	G	10D-b	0.350	se	12.85	7.18	0	0	0	0	0	0	0	0
	G	2 glazing, clr low-e	0.350	se	12.85	9.23	0	0	0	0	0	0	0	0
	G	2 glazing, clr low-e	0.350	se	12.85	20.25	0	0	0	0	0	0	0	0
	G	2 glazing, clr low-e	0.350	se	12.85	16.78	0	0	0	0	0	0	0	0
	W	13A-4ocs	0.143	sw	5.25	2.60	121	85	446	221	50	50	260	129
	G	10D-b	0.350	sw	12.85	7.18	0	0	0	0	0	0	0	0
	G	2 glazing, clr low-e	0.350	sw	12.85	9.23	36	36	462	332	0	0	0	0
	G	2 glazing, clr low-e	0.350	sw	12.85	9.23	0	0	0	0	0	0	0	0
	G	4B5-2fb	0.350	sw	12.85	11.60	0	0	0	0	0	0	0	0
	W	13A-4ocs	0.143	nw	5.25	2.60	133	77	405	201	127	100	525	261
	G	10D-b	0.350	nw	12.85	15.03	20	0	258	302	0	0	0	0
	G	10D-b	0.350	nw	12.85	13.53	0	0	0	0	0	0	0	0
	G	2 glazing, clr low-e	0.350	nw	12.85	19.32	0	0	0	0	9	0	116	174
	G	2 glazing, clr low-e	0.350	nw	12.85	19.32	0	0	0	0	18	0	231	348
	G	2 glazing, clr low-e	0.350	nw	12.85	19.32	0	0	0	0	0	0	0	0
	G	2 glazing, clr low-e	0.350	nw	12.85	19.32	0	0	0	0	0	0	0	0
	G	2 glazing, clr low-e	0.350	nw	12.85	19.32	36	0	462	696	0	0	0	0
	C	16B-19md	0.049	-	1.80	2.59	186	186	335	483	130	130	234	337
	F	22A-cpl	0.989	-	36.30	0.00	186	27	992	0	130	21	750	0

6	c) AED excursion									930				298
	Envelope loss/gain								3361	3165			2198	1587
12	a) Infiltration								762	155			576	118
	b) Room ventilation								0	0			0	0
13	Internal gains:	Occupants @	230				0			0	0			0
		Appliances/other								500				0
	Subtotal (lines 6 to 13)								4123	3820			2774	1704
	Less external load								0	0			0	0
	Less transfer								0	0			0	0
	Redistribution								0	0			0	0
14	Subtotal								4123	3820			2774	1704
15	Duct loads						27%	41%	1098	1563	27%	41%	739	697
	Total room load								5221	5383			3513	2402
	Air required (cfm)								224	270			150	120

Printout certified by ACCA to meet all requirements of Manual J 8th Ed.

29099

Richard T. Reep, M. Arch.

20 January 2011

Troy Crews via fax 386-758-2160
Building Inspector
Columbia County Building Department
Post Office Box 1529
Lake City, FL 32056-1529

Re: Baggett Residence
Interior Footing Alternate

At the main residence, interior footings are to be placed along grid lines R1.3 and R2.3. The footings are shown on sheet S101.

T.C.
1-20-11

The following footing may be used in lieu of the typical footing for this project:

> Thickened slab, a minimum of 1' – 0" thick x 1' 4" wide, with tapered (45 degree) sides, containing two #5 rebar continuous along the length of the footing. This footing may be poured monolithically with the floor slab.

If you have any questions please feel free to contact me anytime.

Regards,

Richard T. Reep, AIA

Copy: Douglas J. Baggett, PBA

ITW Building Components Group, Inc.

1950 Marley Drive Haines City, FL 33844
Florida Engineering Certificate of Authorization Number: 0 278
Florida Certificate of Product Approval # FL1999
Page 1 of 1 Document ID:1U6L2327Z1003152525

DOUGLAS FLEMING LICENSE No. 66648 STATE OF FLORIDA PROFESSIONAL ENGINEER
11/03/2010

Truss Fabricator:	Duley Truss
Job Identification:	10700-HOUSE ACCT. BAGGETT RES (10700-HOUSE ACCT. BAGGETT RES
Truss Count:	53
Model Code:	Florida Building Code 2007 and 2009 Supplement
Truss Criteria:	FBC2007Res/TPI-2002(STD)
Engineering Software:	Alpine Software,Versions 9.01, 10.02.
Structural Engineer of Record:	The identity of the structural EOR did not exist as of
Address:	the seal date per section 61G15-31.003(5a) of the FAC
Minimum Design Loads:	Roof - 37.0 PSF @ 1.25 Duration
	Floor - N/A
	Wind - 120 MPH ASCE 7-05 -Closed

Notes:

1. Determination as to the suitability of these truss components for the structure is the responsibility of the building designer/engineer of record, as defined in ANSI/TPI 1
2. The drawing date shown on this index sheet must match the date shown on the individual truss component drawing.
3. As shown on attached drawings; the drawing number is preceded by: HCUSR2327

Douglas M. Fleming
-Truss Design Engineer-

1950 Marley Drive
Haines City, FL 33844

Details: -

#	Ref Description	Drawing#	Date
1	61373--T1	10307109	11/03/10
2	61374--T2	10307110	11/03/10
3	61375--T3	10307105	11/03/10
4	61376--T3A	10307106	11/03/10
5	61377--T4	10307107	11/03/10
6	61378--T5	10307108	11/03/10
7	61379--T6A	10307141	11/03/10
8	61380--T6B	10307139	11/03/10
9	61381--T6C	10307138	11/03/10
10	61382--T6G	10307106	11/03/10
11	61383--T6	10307137	11/03/10
12	61384--T7	10307104	11/03/10
13	61385--T8	10307105	11/03/10
14	61386--T9	10307153	11/03/10
15	61387--T12	10307131	11/03/10
16	61388--T13	10307148	11/03/10
17	61389--T14	10307103	11/03/10
18	61390--T15	10307120	11/03/10
19	61391--T16	10307119	11/03/10
20	61392--T17	10307118	11/03/10
21	61393--T18	10307117	11/03/10
22	61394--T19	10307116	11/03/10
23	61395--SJ5	10307122	11/03/10
24	61396--EJ7	10307125	11/03/10
25	61397--SJ3	10307123	11/03/10
26	61398--SJ1	10307124	11/03/10
27	61399--EJ7A	10307149	11/03/10
28	61400--EJ7B	10307115	11/03/10
29	61401--EJ7C	10307152	11/03/10
30	61402--SJ5A	10307150	11/03/10
31	61403--SJ3A	10307147	11/03/10
32	61404--SJ1A	10307130	11/03/10
33	61405--SJ5B	10307112	11/03/10
34	61406--SJ3B	10307113	11/03/10
35	61407--SJ1B	10307114	11/03/10
36	61408--SJ6C	10307129	11/03/10
37	61409--SJ5C	10307132	11/03/10
38	61410--SJ4C	10307133	11/03/10
39	61411--SJ3C	10307134	11/03/10
40	61412--SJ2C	10307135	11/03/10
41	61413--SJ1C	10307136	11/03/10
42	61414--SJ5D	10307126	11/03/10
43	61415--SJ3D	10307127	11/03/10
44	61416--SJ1D	10307128	11/03/10
45	61417--EJ11E	10307146	11/03/10
46	61418--SJ10E	10307145	11/03/10
47	61419--SJ9E	10307144	11/03/10
48	61420--SJ8E	10307143	11/03/10
49	61421--SJ7E	10307142	11/03/10
50	61422--CJ7	10307121	11/03/10
51	61423--CJ7A	10307151	11/03/10
52	61424--CJ7B	10307111	11/03/10
53	61425--CJ11C	10307140	11/03/10

COLUMBIA COUNTY BUILDING DEPARTMENT
Received for FILE COPY
Code Compliance
PLANS EXAMINER

ITW Building Components Group, Inc.

1950 Marley Drive Haines City, FL 33844
 Document ID:1U6L2327Z1003152525

Truss Fabricator:	Duley Truss
Job Identification:	10700-HOUSE ACCT. BAGGETT RES (10700-HOUSE ACCT. BAGGETT RES
Truss Count:	2
Model Code:	Florida Building Code 2007 and 2009 Supplement
Truss Criteria:	FBC2007Res/TPI-2002(STD)
Engineering Software:	Alpine Software,Versions 9.01, 10.02.
Structural Engineer of Record:	
Address:	
Minimum Design Loads:	Roof - 37.0 PSF @ 1.25 Duration Floor - N/A Wind - 120 MPH ASCE 7-05 -Closed

DOUGLAS FLEMING LICENSE No. 66648 STATE OF FLORIDA PROFESSIONAL ENGINEER
11/03/2010

Seal Date: 11/03/2010

-Truss Design Engineer-
Douglas M. Fleming

1950 Marley Drive
Haines City, FL 33844

Notes:

1. Determination as to the suitability of these truss components for the structure is the responsibility of the building designer/engineer of record, as defined in ANSI/TPI 1
2. The drawing date shown on this index sheet must match the date shown on the individual truss component drawing.
3. As shown on attached drawings; the drawing number is preceded by: HCUSR2327

Revised Trusses

#	Ref	Description	Drawing#	Date
1	61375	--T3	10307105	11/03/10
2	61418	--SJ10E	10307145	11/03/10

Top chord 2x4 SP #2 Dense
Bot chord 2x4 SP #2 Dense
Webs 2x4 SP #3

Roof overhang supports 2.00 psf soffit load.

In lieu of structural panels or rigid ceiling use purlins to brace all flat TC @ 24" OC, all BC @ 24" OC.

Deflection meets L/360 live and L/240 total load.

120 mph wind, 15.00 ft mean hgt, ASCE 7-05, CLOSED bldg, Located anywhere in roof, CAT II, EXP B, wind TC DL=4.2 psf, wind BC DL=5.0 psf. Iw=1.00 GCpi(+/-)=0.18

Wind reactions based on MWFRS pressures.

#1 hip supports 7-0-0 jacks with no webs.

Left side jacks have 7-0-0 setback with 0-0-0 cant and 2-0-14 overhang. End jacks have 7-0-0 setback with 0-0-0 cant and 2-0-14 overhang. Right side jacks have 7-0-0 setback with 0-0-0 cant and 2-0-14 overhang.

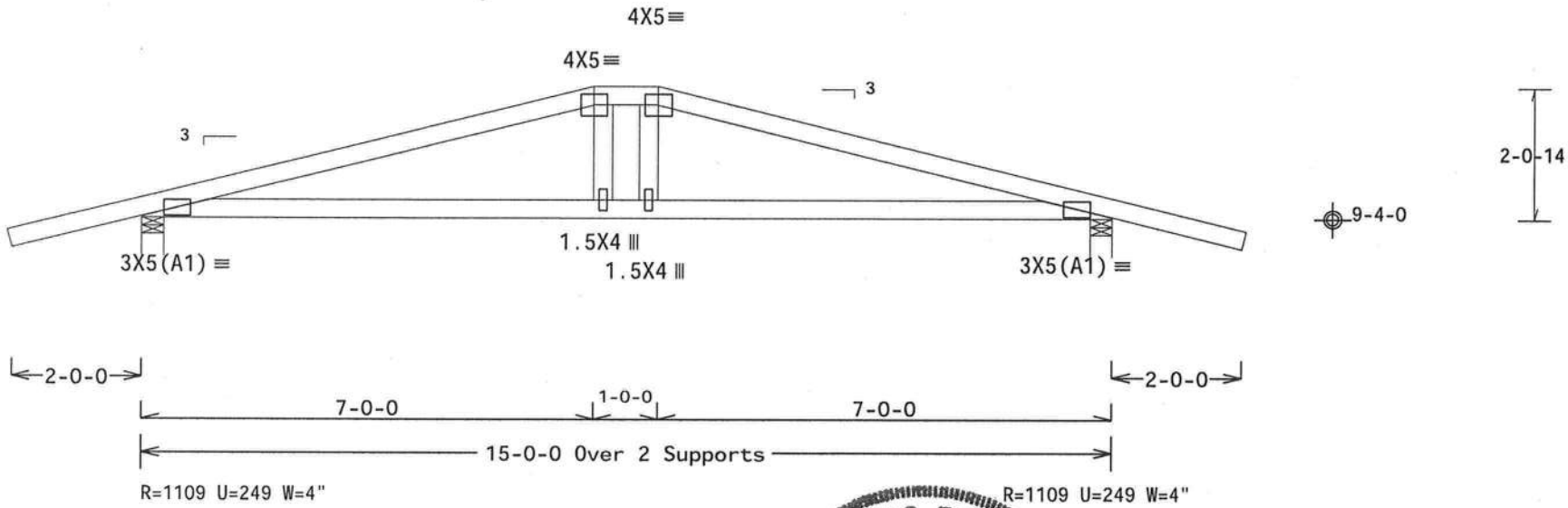

Design Crit: FBC2007Res/TPI-2002(STD)
FT/RT=20%(0%)/10(0)

PLT TYP. Wave | 9.02.02.0210.16 | QTY 1 | FL/-/2/-/-/R/- | Scale =.375"/Ft.

ALPINE
ITW Building Components Group Inc.
Haines City, FL 33844
FL COA #0 278

WARNING TRUSSES REQUIRE EXTREME CARE IN FABRICATION, HANDLING, SHIPPING, INSTALLING AND BRACING. REFER TO BCSI (BUILDING COMPONENT SAFETY INFORMATION), PUBLISHED BY TPI (TRUSS PLATE INSTITUTE, 218 NORTH LEE STREET, SUITE 312, ALEXANDRIA, VA, 22314) AND WTCA (WOOD TRUSS COUNCIL OF AMERICA, 6300 ENTERPRISE LANE, MADISON, WI 53719) FOR SAFETY PRACTICES PRIOR TO PERFORMING THESE FUNCTIONS. UNLESS OTHERWISE INDICATED TOP CHORD SHALL HAVE PROPERLY ATTACHED STRUCTURAL PANELS AND BOTTOM CHORD SHALL HAVE A PROPERLY ATTACHED RIGID CEILING.

IMPORTANTFURNISH A COPY OF THIS DESIGN TO THE INSTALLATION CONTRACTOR. ITW BCG, INC. SHALL NOT BE RESPONSIBLE FOR ANY DEVIATION FROM THIS DESIGN; ANY FAILURE TO BUILD THE TRUSS IN COMFORMANCE WITH TPI; OR FABRICATING, HANDLING, SHIPPING, INSTALLING & BRACING OF TRUSSES. DESIGN CONFORMS WITH APPLICABLE PROVISIONS OF NDS (NATIONAL DESIGN SPEC, BY AF&PA) AND TPI. THIS DESIGN CONNECTOR PLATES ARE MADE OF 20/18/16GA (W,H/SS/K) ASTM A653 GRADE 40/60 (W, K/H,SS) GALV. STEEL. APPLY PLATES TO EACH FACE OF TRUSS AND, UNLESS OTHERWISE LOCATED ON THIS DESIGN, POSITION PER DRAWINGS 160 & 2. ANY INSPECTION OF PLATES FOLLOWED BY (1) SHALL BE PER ANNEX A3 OF TPI1-2002 SEC.3. A SEAL ON THIS DRAWING INDICATES ACCEPTANCE OF PROFESSIONAL ENGINEERING RESPONSIBILITY SOLELY FOR THE TRUSS COMPONENT DESIGN SHOWN. THE SUITABILITY AND USE OF THIS COMPONENT FOR ANY BUILDING IS THE RESPONSIBILITY OF THE BUILDING DESIGNER PER ANSI/TPI 1 SEC. 2.

DOUGLAS FLEMING LICENSE No. 66648 STATE OF FLORIDA PROFESSIONAL ENGINEER
11/03/2010

TC LL	20.0 PSF	REF	R2327- 61373
TC DL	7.0 PSF	DATE	11/03/10
BC DL	10.0 PSF	DRW	HCUSR2327 10307109
BC LL	0.0 PSF	HC-ENG	SSB/DF
TOT.LD.	37.0 PSF	SEQN-	338076
DUR.FAC.	1.25	FROM	JRG
SPACING	24.0"	JREF-	1U6L2327Z10

(10700-HOUSE ACCT. BAGGETT RES - T2)

Top chord 2x4 SP #2 Dense
Bot chord 2x4 SP #2 Dense
Webs 2x4 SP #3

Roof overhang supports 2.00 psf soffit load.

In lieu of rigid ceiling use purlins to brace BC @ 24" OC.

Deflection meets L/360 live and L/240 total load.

120 mph wind, 15.00 ft mean hgt, ASCE 7-05, CLOSED bldg, not located within 4.50 ft from roof edge, CAT II, EXP B, wind TC DL=4.2 psf, wind BC DL=5.0 psf. Iw=1.00 GCpi(+/-)=0.18

Wind reactions based on MWFRS pressures.

Bottom chord checked for 10.00 psf non-concurrent live load.

MWFRS loads based on trusses located at least 7.50 ft. from roof edge.

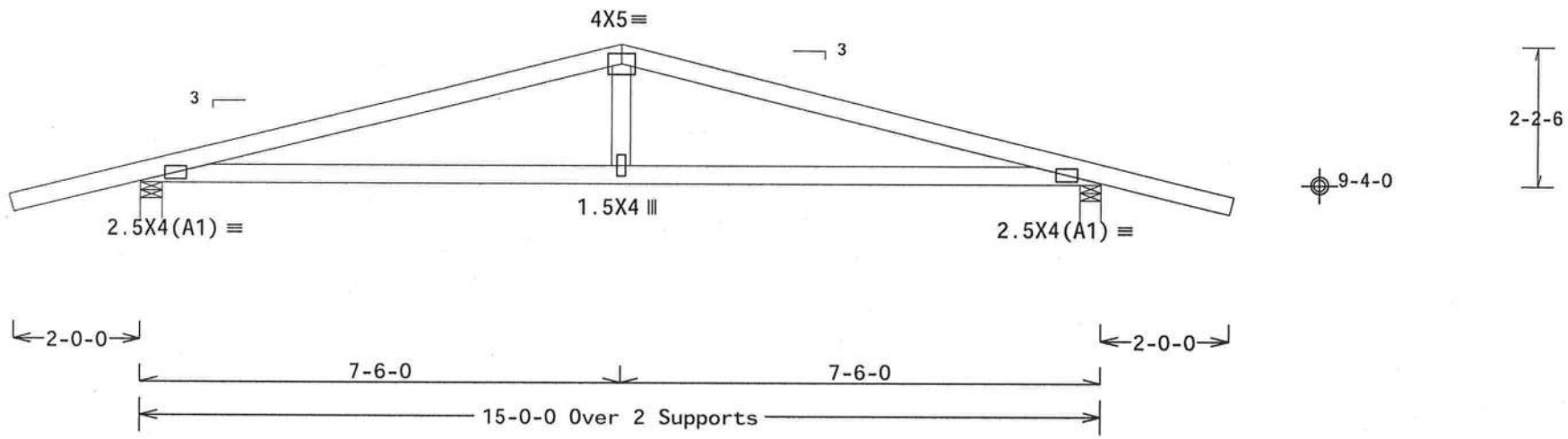

Design Crit: FBC2007Res/TPI-2002(STD)
FT/RT=20%(0%)/10(0)

PLT TYP. Wave

9.02.02.0210.16 QTY 1 FL/-/2/-/-/R/- Scale =.375"/Ft.

ALPINE
ITW Building Components Group Inc.
Haines City, FL 33844
FL COA #0 278

WARNING TRUSSES REQUIRE EXTREME CARE IN FABRICATION, HANDLING, SHIPPING, INSTALLING AND BRACING. REFER TO BCSI (BUILDING COMPONENT SAFETY INFORMATION), PUBLISHED BY TPI (TRUSS PLATE INSTITUTE, 218 NORTH LEE STREET, SUITE 312, ALEXANDRIA, VA, 22314) AND WTCA (WOOD TRUSS COUNCIL OF AMERICA, 6300 ENTERPRISE LANE, MADISON, WI 53719) FOR SAFETY PRACTICES PRIOR TO PERFORMING THESE FUNCTIONS. UNLESS OTHERWISE INDICATED TOP CHORD SHALL HAVE PROPERLY ATTACHED STRUCTURAL PANELS AND BOTTOM CHORD SHALL HAVE A PROPERLY ATTACHED RIGID CEILING.

IMPORTANTFURNISH A COPY OF THIS DESIGN TO THE INSTALLATION CONTRACTOR. ITW BCG, INC. SHALL NOT BE RESPONSIBLE FOR ANY DEVIATION FROM THIS DESIGN; ANY FAILURE TO BUILD THE TRUSS IN CONFORMANCE WITH TPI; OR FABRICATING, HANDLING, SHIPPING, INSTALLING & BRACING OF TRUSSES. DESIGN CONFORMS WITH APPLICABLE PROVISIONS OF NDS (NATIONAL DESIGN SPEC, BY AF&PA) AND TPI. ITW BCG CONNECTOR PLATES ARE MADE OF 20/18/16GA (W,H/SS/K) ASTM A653 GRADE 40/60 (W, K/H,SS) GALV. STEEL. APPLY PLATES TO EACH FACE OF TRUSS AND, UNLESS OTHERWISE LOCATED ON THIS DESIGN, POSITION PER DRAWINGS 160-111. ANY INSPECTION OF PLATES FOLLOWED BY (i) SHALL BE PER ANNEX A3 OF TPI1-2002 SEC.3. A SEAL ON THIS DRAWING INDICATES ACCEPTANCE OF PROFESSIONAL ENGINEERING RESPONSIBILITY SOLELY FOR THE TRUSS COMPONENT DESIGN SHOWN. THE SUITABILITY AND USE OF THIS COMPONENT FOR ANY BUILDING IS THE RESPONSIBILITY OF THE BUILDING DESIGNER PER ANSI/TPI 1 SEC. 2.

DOUGLAS FLEMING LICENSE No. 66648 STATE OF FLORIDA PROFESSIONAL ENGINEER
11/03/2010

TC LL	20.0 PSF	REF	R2327- 61374
TC DL	7.0 PSF	DATE	11/03/10
BC DL	10.0 PSF	DRW	HCUSR2327 10307110
BC LL	0.0 PSF	HC-ENG	SSB/DF
TOT.LD.	37.0 PSF	SEQN-	337960
DUR.FAC.	1.25	FROM	JRG
SPACING	24.0"	JREF-	1U6L2327Z10

(10700-HOUSE ACCT. BAGGETT RES - T3)

THIS DWG PREPARED FROM COMPUTER INPUT (LOADS & DIMENSIONS) SUBMITTED BY TRUSS MFR.

Top chord 2x4 SP #2 Dense :T2, T3 2x6 SP #2:
Bot chord 2x6 SP #2 :B2, B3 2x6 SP #2 Dense:
Webs 2x4 SP #3 :W2, W14 2x4 SP #2 Dense:

Special loads
------(Lumber Dur.Fac.=1.25 / Plate Dur.Fac.=1.25)

TC- From	55 plf at	0.00 to	55 plf at	14.00
TC- From	115 plf at	14.00 to	115 plf at	35.58
TC- From	55 plf at	35.58 to	55 plf at	49.58
BC- From	20 plf at	0.00 to	20 plf at	14.00
BC- From	44 plf at	14.00 to	44 plf at	14.20
BC- From	144 plf at	14.20 to	144 plf at	35.58
BC- From	120 plf at	35.58 to	120 plf at	35.78
BC- From	20 plf at	35.78 to	20 plf at	49.58

TC- 276.00 lb Conc. Load at 14.00,35.20
BC- 1542.00 lb Conc. Load at 14.00,35.58

In lieu of structural panels or rigid ceiling use purlins to brace all flat TC @ 24" OC, all BC @ 24" OC.

LOADING HAS BEEN CALCULATED BY THE TRUSS MANUFACTURER. IT IS THE RESPONSIBILITY OF THE BUILDING DESIGNER TO VERIFY AND APPROVE THE LOADING.

2 COMPLETE TRUSSES REQUIRED

Nail Schedule:0.128"x3.25", min. nails
Top Chord: 1 Row @12.00" o.c.
Bot Chord: 1 Row @11.25" o.c.
Webs : 1 Row @ 4" o.c.
Use equal spacing between rows and stagger nails in each row to avoid splitting.

120 mph wind, 15.00 ft mean hgt, ASCE 7-05, CLOSED bldg, not located within 4.50 ft from roof edge, CAT II, EXP B, wind TC DL=4.2 psf, wind BC DL=5.0 psf. Iw=1.00 GCpi(+/-)=0.18

Wind reactions based on MWFRS pressures.

End verticals not exposed to wind pressure.

Deflection meets L/360 live and L/240 total load.

WARNING: Furnish a copy of this DWG to the installation contractor. Special care must be taken during handling, shipping and installation of trusses. See "WARNING" note below.

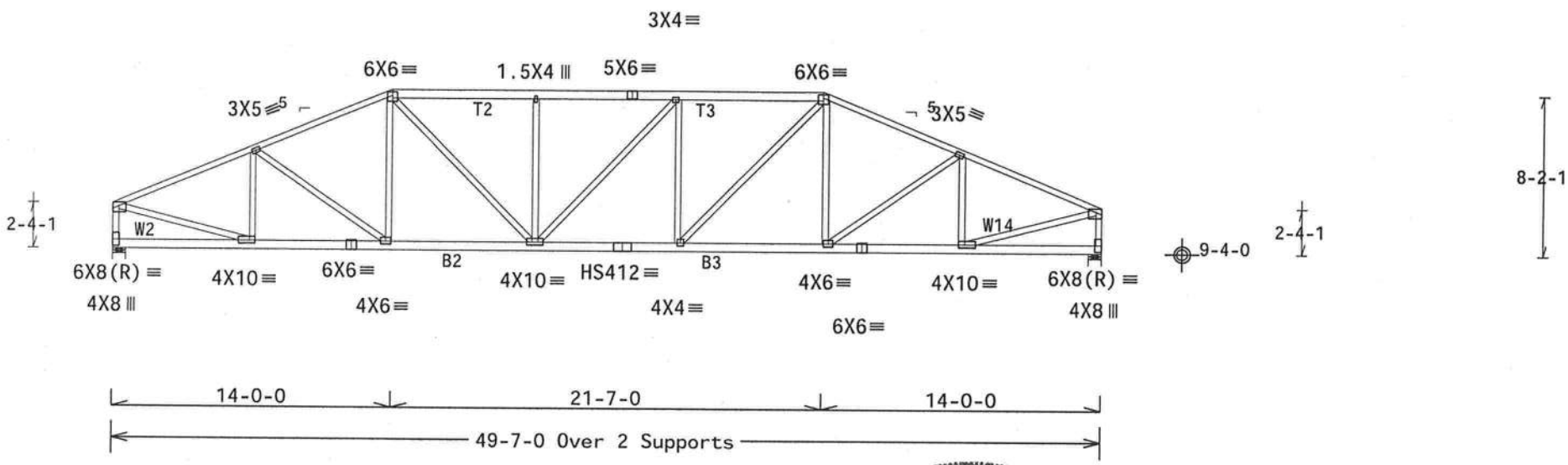

Design Crit: FBC2007Res/TPI-2002(STD)
FT/RT=20%(0%)/10(0)

PLT TYP. 20 Gauge HS,Wave

10.02.01/0923.23 QTY: FL/-/2/-/-/R/- Scale =.125"/Ft.

ALPINE
ITW Building Components Group Inc.
Haines City, FL 33844
FL COA #0 278

WARNING TRUSSES REQUIRE EXTREME CARE IN FABRICATION, HANDLING, SHIPPING, INSTALLING AND BRACING. REFER TO BCSI (BUILDING COMPONENT SAFETY INFORMATION), PUBLISHED BY TPI (TRUSS PLATE INSTITUTE, 218 NORTH LEE STREET, SUITE 312, ALEXANDRIA, VA, 22314) AND WTCA (WOOD TRUSS COUNCIL OF AMERICA, 6300 ENTERPRISE LANE, MADISON, WI 53719) FOR SAFETY PRACTICES PRIOR TO PERFORMING THESE FUNCTIONS. UNLESS OTHERWISE INDICATED TOP CHORD SHALL HAVE PROPERLY ATTACHED STRUCTURAL PANELS AND BOTTOM CHORD SHALL HAVE A PROPERLY ATTACHED RIGID CEILING.

IMPORTANT FURNISH A COPY OF THIS DESIGN TO THE INSTALLATION CONTRACTOR. ITW BCG, INC. SHALL NOT BE RESPONSIBLE FOR ANY DEVIATION FROM THIS DESIGN; ANY FAILURE TO BUILD THE TRUSS IN COMFORMANCE WITH TPI; OR FABRICATING, HANDLING, SHIPPING, INSTALLING & BRACING OF TRUSSES.
DESIGN CONFORMS WITH APPLICABLE PROVISIONS OF NDS (NATIONAL DESIGN SPEC, BY AF&PA) AND TPI. ITW BCG CONNECTOR PLATES ARE MADE OF 20/18/16GA (W,H/SS/K) ASTM A653 GRADE 40/60 (W, K/H,SS) GALV. STEEL. APPLY PLATES TO EACH FACE OF TRUSS AND, UNLESS OTHERWISE LOCATED ON THIS DESIGN, POSITION PER DRAWINGS 160A-1. ANY INSPECTION OF PLATES FOLLOWED BY (1) SHALL BE PER ANNEX A3 OF TPI1-2002 SEC.3. A SEAL ON THIS DRAWING INDICATES ACCEPTANCE OF PROFESSIONAL ENGINEERING RESPONSIBILITY SOLELY FOR THE TRUSS COMPONENT DESIGN SHOWN. THE SUITABILITY AND USE OF THIS COMPONENT FOR ANY BUILDING IS THE RESPONSIBILITY OF THE BUILDING DESIGNER PER ANSI/TPI 1 SEC. 2.

DOUGLAS FLEMING LICENSE No. 66648 STATE OF FLORIDA PROFESSIONAL ENGINEER
11/03/2010

TC LL	20.0 PSF	REF	R2327- 61375
TC DL	7.0 PSF	DATE	11/03/10
BC DL	10.0 PSF	DRW	HCUSR2327 10307105
BC LL	0.0 PSF	HC-ENG	SSB/DF
TOT.LD.	37.0 PSF	SEQN-	4682 REV
DUR.FAC.	1.25	FROM	JRG
SPACING	24.0"	JREF-	1U6L2327Z10

Top chord 2x4 SP #2 Dense :T2, T3 2x6 SP #2:
Bot chord 2x6 SP #2
Webs 2x4 SP #3

120 mph wind, 15.00 ft mean hgt, ASCE 7-05, CLOSED bldg, Located anywhere in roof, CAT II, EXP B, wind TC DL=4.2 psf, wind BC DL=5.0 psf. Iw=1.00 GCpi(+/-)=0.18

Wind reactions based on MWFRS pressures.

In lieu of structural panels or rigid ceiling use purlins to brace all flat TC @ 24" OC, all BC @ 24" OC.

Deflection meets L/360 live and L/240 total load.

2 COMPLETE TRUSSES REQUIRED

Nail Schedule:0.128"x3.25", min. nails
Top Chord: 1 Row @12.00" o.c.
Bot Chord: 1 Row @12.00" o.c.
Webs : 1 Row @ 4" o.c.
Use equal spacing between rows and stagger nails in each row to avoid splitting.

End verticals not exposed to wind pressure.

#1 hip supports 14-0-0 jacks with no webs.

WARNING: Furnish a copy of this DWG to the installation contractor. Special care must be taken during handling, shipping and installation of trusses. See "WARNING" note below.

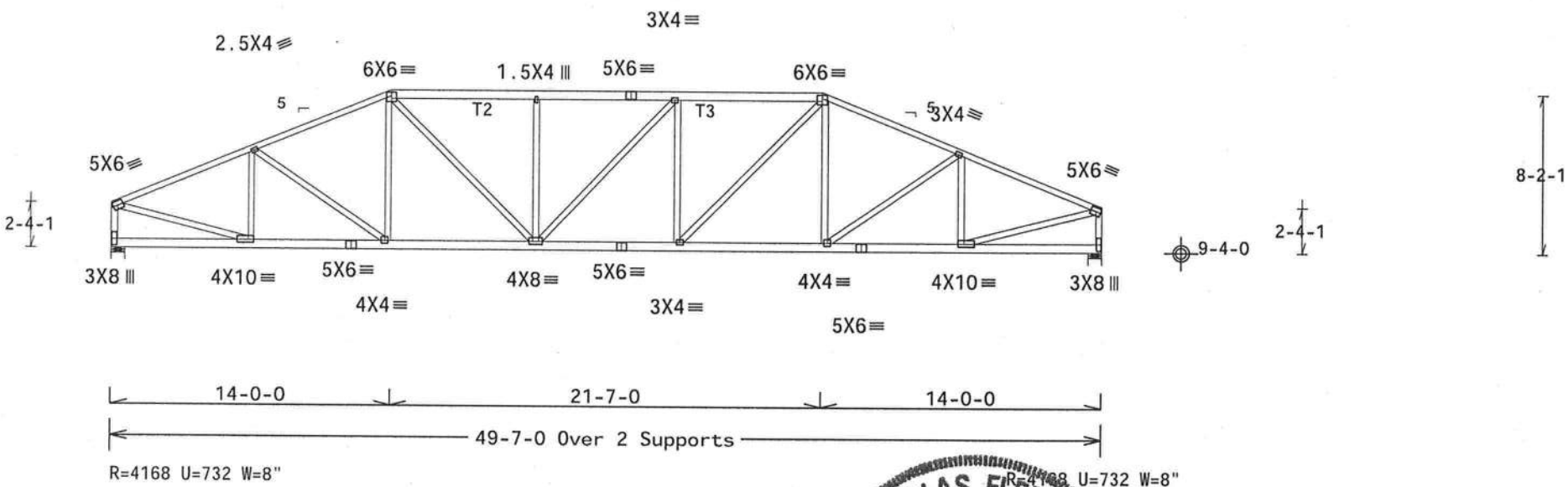

Design Crit: FBC2007Res/TPI-2002(STD)
FT/RT=20%(0%)/10(0)

PLT TYP. Wave

9.01.02.0210.16 QTY: 1

FL/-/2/-/-/R/-

Scale =.125"/Ft.

DOUGLAS FLEMING LICENSE No. 66648 STATE OF FLORIDA PROFESSIONAL ENGINEER
11/03/2010

ALPINE
ITW Building Components Group Inc.
Haines City, FL 33844
FL COA #0 278

WARNING TRUSSES REQUIRE EXTREME CARE IN FABRICATION, HANDLING, SHIPPING, INSTALLING AND BRACING. REFER TO BCSI (BUILDING COMPONENT SAFETY INFORMATION), PUBLISHED BY TPI (TRUSS PLATE INSTITUTE, 218 NORTH LEE STREET, SUITE 312, ALEXANDRIA, VA. 22314) AND WTCA (WOOD TRUSS COUNCIL OF AMERICA, 6300 ENTERPRISE LANE, MADISON, WI 53719) FOR SAFETY PRACTICES PRIOR TO PERFORMING THESE FUNCTIONS. UNLESS OTHERWISE INDICATED TOP CHORD SHALL HAVE PROPERLY ATTACHED STRUCTURAL PANELS AND BOTTOM CHORD SHALL HAVE A PROPERLY ATTACHED RIGID CEILING.

IMPORTANTFURNISH A COPY OF THIS DESIGN TO THE INSTALLATION CONTRACTOR. ITW BCG, INC. SHALL NOT BE RESPONSIBLE FOR ANY DEVIATION FROM THIS DESIGN; ANY FAILURE TO BUILD THE TRUSS IN COMFORMANCE WITH TPI; OR FABRICATING, HANDLING, SHIPPING, INSTALLING & BRACING OF TRUSSES.
DESIGN CONFORMS WITH APPLICABLE PROVISIONS OF NDS (NATIONAL DESIGN SPEC, BY AF&PA) AND TPI. ITW BCG CONNECTOR PLATES ARE MADE OF 20/18/16GA (W,H/SS/K) ASTM A653 GRADE 40/60 (W, K/H,SS) GALV. STEEL. APPLY PLATES TO EACH FACE OF TRUSS AND, UNLESS OTHERWISE LOCATED ON THIS DESIGN, POSITION PER DRAWINGS 160A-Z. ANY INSPECTION OF PLATES FOLLOWED BY (i) SHALL BE PER ANNEX A3 OF TPI1-2002 SEC.3. A SEAL ON THIS DRAWING INDICATES ACCEPTANCE OF PROFESSIONAL ENGINEERING RESPONSIBILITY SOLELY FOR THE TRUSS COMPONENT DESIGN SHOWN. THE SUITABILITY AND USE OF THIS COMPONENT FOR ANY BUILDING IS THE RESPONSIBILITY OF THE BUILDING DESIGNER PER ANSI/TPI 1 SEC. 2.

TC LL	20.0 PSF	REF	R2327- 61376
TC DL	7.0 PSF	DATE	11/03/10
BC DL	10.0 PSF	DRW	HCUSR2327 10307106
BC LL	0.0 PSF	HC-ENG	SSB/DF
TOT.LD.	37.0 PSF	SEQN-	350764
DUR.FAC.	1.25	FROM	JRG
SPACING	24.0"	JREF-	1U6L2327Z10

Top chord 2x4 SP #2 Dense
Bot chord 2x4 SP #2 Dense
Webs 2x4 SP #3

End verticals not exposed to wind pressure.

(B) Continuous lateral bracing equally spaced on member. Or 1x4 #3SRB SPF-S or better "T" brace. 80% length of web member. Attached with 8d Box or Gun (0.113"x2.5",min.)nails @ 6" OC.

In lieu of structural panels or rigid ceiling use purlins to brace all flat TC @ 24" OC, all BC @ 24" OC.

Bottom chord checked for 10.00 psf non-concurrent live load.

WARNING: Furnish a copy of this DWG to the installation contractor. Special care must be taken during handling, shipping and installation of trusses. See "WARNING" note below.

120 mph wind, 15.42 ft mean hgt, ASCE 7-05, CLOSED bldg, not located within 6.50 ft from roof edge, CAT II, EXP B, wind TC DL=4.2 psf, wind BC DL=5.0 psf. Iw=1.00 GCpi(+/-)=0.18

Wind reactions based on MWFRS pressures.

(A) Continuous lateral bracing equally spaced on member. Or 2x6 #3 or better "T" brace. 80% length of web member. Attached with 16d Box or Gun (0.135"x3.5",min.)nails @ 6" OC.

Truss passed check for 20 psf additional bottom chord live load in areas with 42"-high x 24"-wide clearance.

Deflection meets L/360 live and L/240 total load.

MWFRS loads based on trusses located at least 15.42 ft. from roof edge.

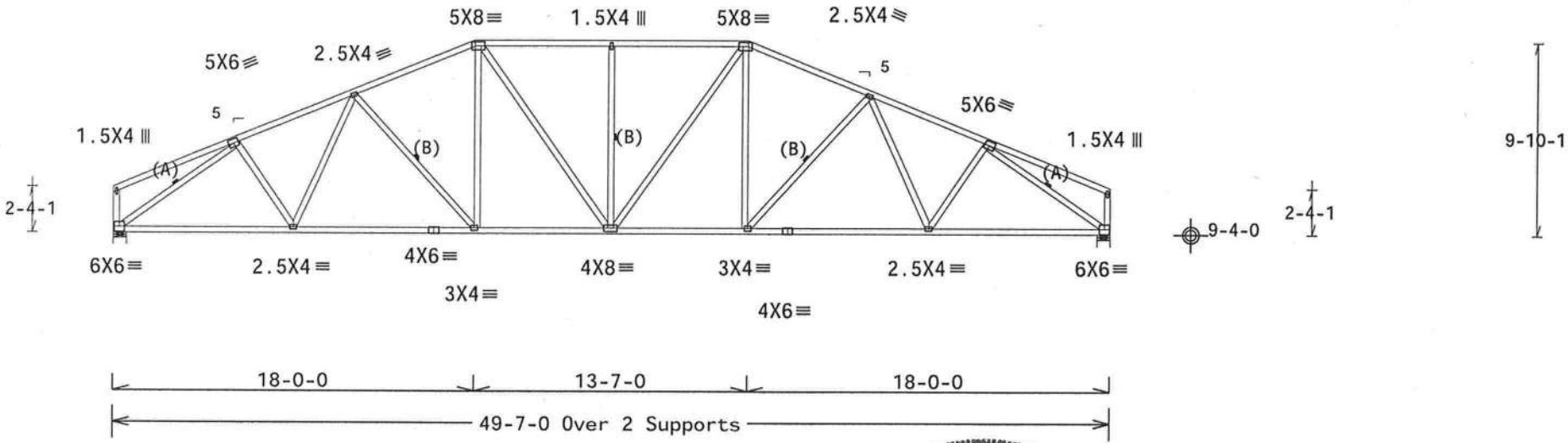

R=2170 U=88 W=8"
RL=188/-188

R=1971 U=88 W=8"

Design Crit: FBC2007Res/TPI-2002(STD)
FT/RT=20%(0%)/10(0)

PLT TYP. Wave

9.01.02.0210.16 QTY:2

FL/-/2/-/-/R/-

Scale =.125"/Ft.

ALPINE
ITW Building Components Group Inc.
Haines City, FL 33844
FL COA #0 278

WARNING TRUSSES REQUIRE EXTREME CARE IN FABRICATION, HANDLING, SHIPPING, INSTALLING AND BRACING. REFER TO BCSI (BUILDING COMPONENT SAFETY INFORMATION), PUBLISHED BY TPI (TRUSS PLATE INSTITUTE, 218 NORTH LEE STREET, SUITE 312, ALEXANDRIA, VA. 22314) AND WTCA (WOOD TRUSS COUNCIL OF AMERICA, 6300 ENTERPRISE LANE, MADISON, WI 53719) FOR SAFETY PRACTICES PRIOR TO PERFORMING THESE FUNCTIONS. UNLESS OTHERWISE INDICATED TOP CHORD SHALL HAVE PROPERLY ATTACHED STRUCTURAL PANELS AND BOTTOM CHORD SHALL HAVE A PROPERLY ATTACHED RIGID CEILING.

IMPORTANTFURNISH A COPY OF THIS DESIGN TO THE INSTALLATION CONTRACTOR. ITW BCG, INC. SHALL NOT BE RESPONSIBLE FOR ANY DEVIATION FROM THIS DESIGN; ANY FAILURE TO BUILD THE TRUSS IN COMFORMANCE WITH TPI; OR FABRICATING, HANDLING, SHIPPING, INSTALLING & BRACING OF TRUSSES.
DESIGN CONFORMS WITH APPLICABLE PROVISIONS OF NDS (NATIONAL DESIGN SPEC, BY AF&PA) AND TPI. ITW BCG CONNECTOR PLATES ARE MADE OF 20/18/16GA (W,H/SS/K) ASTM A653 GRADE 40/60 (W, K/H,SS) GALV. STEEL. APPLY PLATES TO EACH FACE OF TRUSS AND, UNLESS OTHERWISE LOCATED ON THIS DESIGN, POSITION PER DRAWINGS 160A-Z. ANY INSPECTION OF PLATES FOLLOWED BY (i) SHALL BE PER ANNEX A3 OF TPI1-2002 SEC.3. A SEAL ON THIS DRAWING INDICATES ACCEPTANCE OF PROFESSIONAL ENGINEERING RESPONSIBILITY SOLELY FOR THE TRUSS COMPONENT DESIGN SHOWN. THE SUITABILITY AND USE OF THIS COMPONENT FOR ANY BUILDING IS THE RESPONSIBILITY OF THE BUILDING DESIGNER PER ANSI/TPI 1 SEC. 2.

DOUGLAS FLEMING
LICENSE
No. 66648
STATE OF
FLORIDA
PROFESSIONAL ENGINEER
11/03/2010

TC LL	20.0 PSF	REF	R2327- 61377
TC DL	7.0 PSF	DATE	11/03/10
BC DL	10.0 PSF	DRW	HCUSR2327 10307107
BC LL	0.0 PSF	HC-ENG	SSB/DF
TOT.LD.	37.0 PSF	SEQN-	338119
DUR.FAC.	1.25	FROM	JRG
SPACING	24.0"	JREF-	1U6L2327Z10

(10700-HOUSE ACCT. BAGGETT RES - T5)

THIS DWG PREPARED FROM COMPUTER INPUT (LOADS & DIMENSIONS) SUBMITTED BY TRUSS MFR.

Top chord 2x4 SP #2 Dense
Bot chord 2x4 SP #2 Dense
Webs 2x4 SP #3

End verticals not exposed to wind pressure.

(A) Continuous lateral bracing equally spaced on member. Or 2x6 #3 or better "T" brace. 80% length of web member. Attached with 16d Box or Gun (0.135"x3.5",min.)nails @ 6" OC.

Bottom chord checked for 10.00 psf non-concurrent live load.

Deflection meets L/360 live and L/240 total load.

MWFRS loads based on trusses located at least 16.26 ft. from roof edge.

120 mph wind, 16.26 ft mean hgt, ASCE 7-05, CLOSED bldg, not located within 6.50 ft from roof edge, CAT II, EXP B, wind TC DL=4.2 psf, wind BC DL=5.0 psf. Iw=1.00 GCpi(+/-)=0.18

Wind reactions based on MWFRS pressures.

In lieu of structural panels or rigid ceiling use purlins to brace all flat TC @ 24" OC, all BC @ 24" OC.

Truss passed check for 20 psf additional bottom chord live load in areas with 42"-high x 24"-wide clearance.

WARNING: Furnish a copy of this DWG to the installation contractor. Special care must be taken during handling, shipping and installation of trusses. See "WARNING" note below.

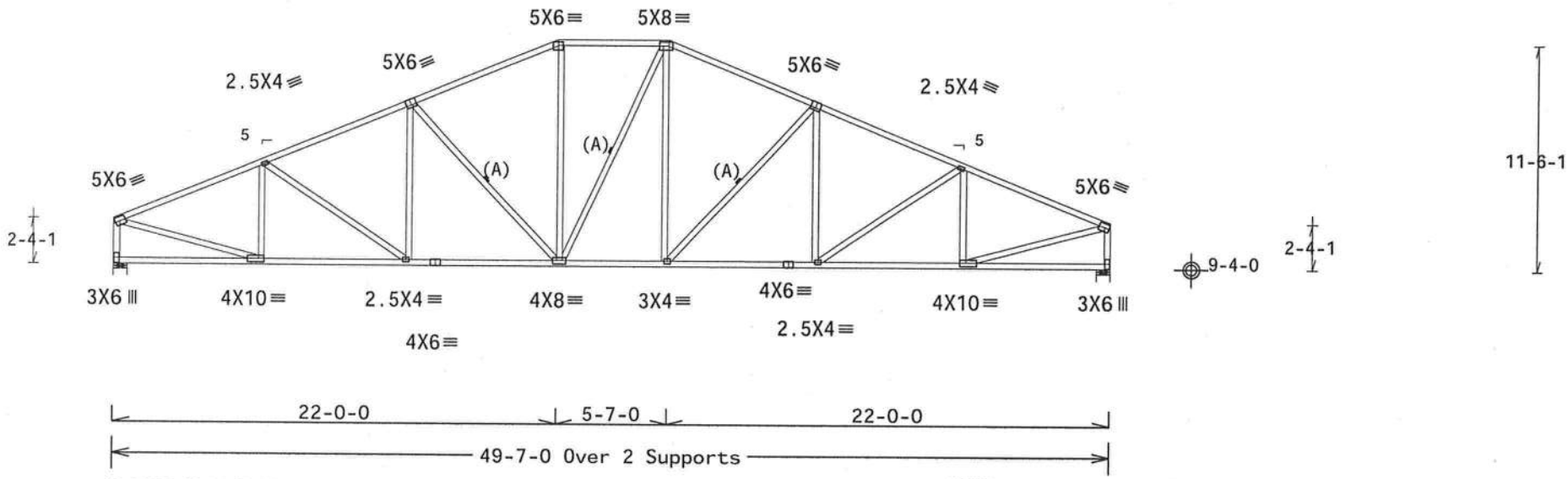

R=2072 U=87 W=8"
RL=233/-233

R=2078 U=87 W=8"

Design Crit: FBC2007Res/TPI-2002(STD)
FT/RT=20%(0%)/10(0)

PLT TYP. Wave

9.01.02.0210.16 QTY 2

FL/-/2/-/-/R/-

Scale =.125"/Ft.

WARNING TRUSSES REQUIRE EXTREME CARE IN FABRICATION, HANDLING, SHIPPING, INSTALLING AND BRACING. REFER TO BCSI (BUILDING COMPONENT SAFETY INFORMATION), PUBLISHED BY TPI (TRUSS PLATE INSTITUTE, 218 NORTH LEE STREET, SUITE 312, ALEXANDRIA, VA. 22314) AND WTCA (WOOD TRUSS COUNCIL OF AMERICA, 6300 ENTERPRISE LANE, MADISON, WI 53719) FOR SAFETY PRACTICES PRIOR TO PERFORMING THESE FUNCTIONS. UNLESS OTHERWISE INDICATED TOP CHORD SHALL HAVE PROPERLY ATTACHED STRUCTURAL PANELS AND BOTTOM CHORD SHALL HAVE A PROPERLY ATTACHED RIGID CEILING.

IMPORTANTFURNISH A COPY OF THIS DESIGN TO THE INSTALLATION CONTRACTOR. ITW BCG, INC. SHALL NOT BE RESPONSIBLE FOR ANY DEVIATION FROM THIS DESIGN; ANY FAILURE TO BUILD THE TRUSS IN CONFORMANCE WITH TPI; OR FABRICATING, HANDLING, SHIPPING, INSTALLING & BRACING OF TRUSSES. DESIGN CONFORMS WITH APPLICABLE PROVISIONS OF NDS (NATIONAL DESIGN SPEC, BY AF&PA) AND TPI. ITW BCG CONNECTOR PLATES ARE MADE OF 20/18/16GA (W,H/SS/K) ASTM A653 GRADE 40/60 (W, K/H,SS) GALV. STEEL. APPLY PLATES TO EACH FACE OF TRUSS AND, UNLESS OTHERWISE LOCATED ON THIS DESIGN, POSITION PER DRAWINGS 1604 ANY INSPECTION OF PLATES FOLLOWED BY (+) SHALL BE PER ANNEX A3 OF TPI1-2002 SEC.3. A SEAL ON THIS DRAWING INDICATES ACCEPTANCE OF PROFESSIONAL ENGINEERING RESPONSIBILITY SOLELY FOR THE TRUSS COMPONENT DESIGN SHOWN. THE SUITABILITY AND USE OF THIS COMPONENT FOR ANY BUILDING IS THE RESPONSIBILITY OF THE BUILDING DESIGNER PER ANSI/TPI 1 SEC. 2.

DOUGLAS FLEMING LICENSE No.66648 STATE OF FLORIDA PROFESSIONAL ENGINEER

11/03/2010

TC LL	20.0 PSF	REF	R2327- 61378
TC DL	7.0 PSF	DATE	11/03/10
BC DL	10.0 PSF	DRW	HCUSR2327 10307108
BC LL	0.0 PSF	HC-ENG	SSB/DF
TOT.LD.	37.0 PSF	SEQN-	338113
DUR.FAC.	1.25	FROM	JRG
SPACING	24.0"	JREF-	1U6L2327Z10

ALPINE
ITW Building Components Group Inc.
Haines City, FL 33844
FL COA #0 278

Top chord 2x4 SP #1
Bot chord 2x4 SP #2 Dense
Webs 2x4 SP #3

In lieu of rigid ceiling use purlins to brace BC @ 24" OC.

Bottom chord checked for 10.00 psf non-concurrent live load.

Deflection meets L/360 live and L/240 total load.

120 mph wind, 15.00 ft mean hgt, ASCE 7-05, CLOSED bldg, not located within 4.50 ft from roof edge, CAT II, EXP B, wind TC DL=4.2 psf, wind BC DL=5.0 psf. Iw=1.00 GCpi(+/-)=0.18

Wind reactions based on MWFRS pressures.

Right end vertical not exposed to wind pressure.

MWFRS loads based on trusses located at least 30.00 ft. from roof edge.

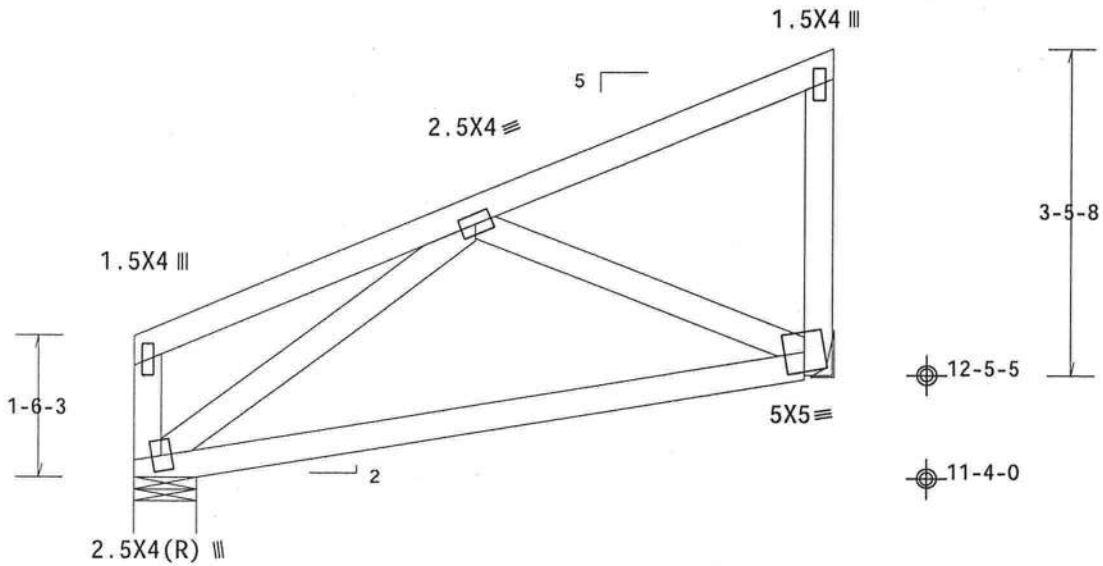

Design Crit: FBC2007Res/TPI-2002(STD)

PLT TYP. Wave | FT/RT=20%(0%)/10(0) | 9.01.02.0210.16 | QTY:4 | FL/-/2/-/-/R/- | Scale =.5"/Ft.

DOUGLAS FLEMING LICENSE No. 66648 STATE OF FLORIDA PROFESSIONAL ENGINEER

11/03/2010

ALPINE
ITW Building Components Group Inc.
Haines City, FL 33844
FL COA #0 278

WARNING TRUSSES REQUIRE EXTREME CARE IN FABRICATION, HANDLING, SHIPPING, INSTALLING AND BRACING. REFER TO BCSI (BUILDING COMPONENT SAFETY INFORMATION), PUBLISHED BY TPI (TRUSS PLATE INSTITUTE, 218 NORTH LEE STREET, SUITE 312, ALEXANDRIA, VA, 22314) AND WTCA (WOOD TRUSS COUNCIL OF AMERICA, 6300 ENTERPRISE LANE, MADISON, WI 53719) FOR SAFETY PRACTICES PRIOR TO PERFORMING THESE FUNCTIONS. UNLESS OTHERWISE INDICATED TOP CHORD SHALL HAVE PROPERLY ATTACHED STRUCTURAL PANELS AND BOTTOM CHORD SHALL HAVE A PROPERLY ATTACHED RIGID CEILING.

IMPORTANT FURNISH A COPY OF THIS DESIGN TO THE INSTALLATION CONTRACTOR. ITW BCG, INC. SHALL NOT BE RESPONSIBLE FOR ANY DEVIATION FROM THIS DESIGN; ANY FAILURE TO BUILD THE TRUSS IN CONFORMANCE WITH TPI; OR FABRICATING, HANDLING, SHIPPING, INSTALLING & BRACING OF TRUSSES. DESIGN CONFORMS WITH APPLICABLE PROVISIONS OF NDS (NATIONAL DESIGN SPEC. BY AF&PA) AND TPI. ITW BCG CONNECTOR PLATES ARE MADE OF 20/18/16GA (W,H/SS/K) ASTM A653 GRADE 40/60 (W, K/H,SS) GALV. STEEL. APPLY PLATES TO EACH FACE OF TRUSS AND, UNLESS OTHERWISE LOCATED ON THIS DESIGN, POSITION PER DRAWINGS 160A-Z. ANY INSPECTION OF PLATES FOLLOWED BY (↓) SHALL BE PER ANNEX A3 OF TPI1-2002 SEC.3. A SEAL ON THIS DRAWING INDICATES ACCEPTANCE OF PROFESSIONAL ENGINEERING RESPONSIBILITY SOLELY FOR THE TRUSS COMPONENT DESIGN SHOWN. THE SUITABILITY AND USE OF THIS COMPONENT FOR ANY BUILDING IS THE RESPONSIBILITY OF THE BUILDING DESIGNER PER ANSI/TPI 1 SEC. 2.

TC LL	20.0 PSF	REF	R2327- 61379
TC DL	7.0 PSF	DATE	11/03/10
BC DL	10.0 PSF	DRW	HCUSR2327 10307141
BC LL	0.0 PSF	HC-ENG	SSB/DF
TOT.LD.	37.0 PSF	SEQN-	341840
DUR.FAC.	1.25	FROM	JRG
SPACING	24.0"	JREF-	1U6L2327Z10

(10700-HOUSE ACCT. BAGGETT RES - T6B)

THIS DWG PREPARED FROM COMPUTER INPUT (LOADS & DIMENSIONS) SUBMITTED BY TRUSS MFR.

Top chord 2x4 SP #2 Dense
Bot chord 2x4 SP #2 Dense
Webs 2x4 SP #3

End verticals not exposed to wind pressure.

In lieu of rigid ceiling use purlins to brace BC @ 24" OC.

Deflection meets L/360 live and L/240 total load.

120 mph wind, 20.17 ft mean hgt, ASCE 7-05, CLOSED bldg, not located within 4.50 ft from roof edge, CAT II, EXP B, wind TC DL=4.2 psf, wind BC DL=5.0 psf. Iw=1.00 GCpi(+/-)=0.18

Wind reactions based on MWFRS pressures.

Bottom chord checked for 10.00 psf non-concurrent live load.

MWFRS loads based on trusses located at least 20.17 ft. from roof edge.

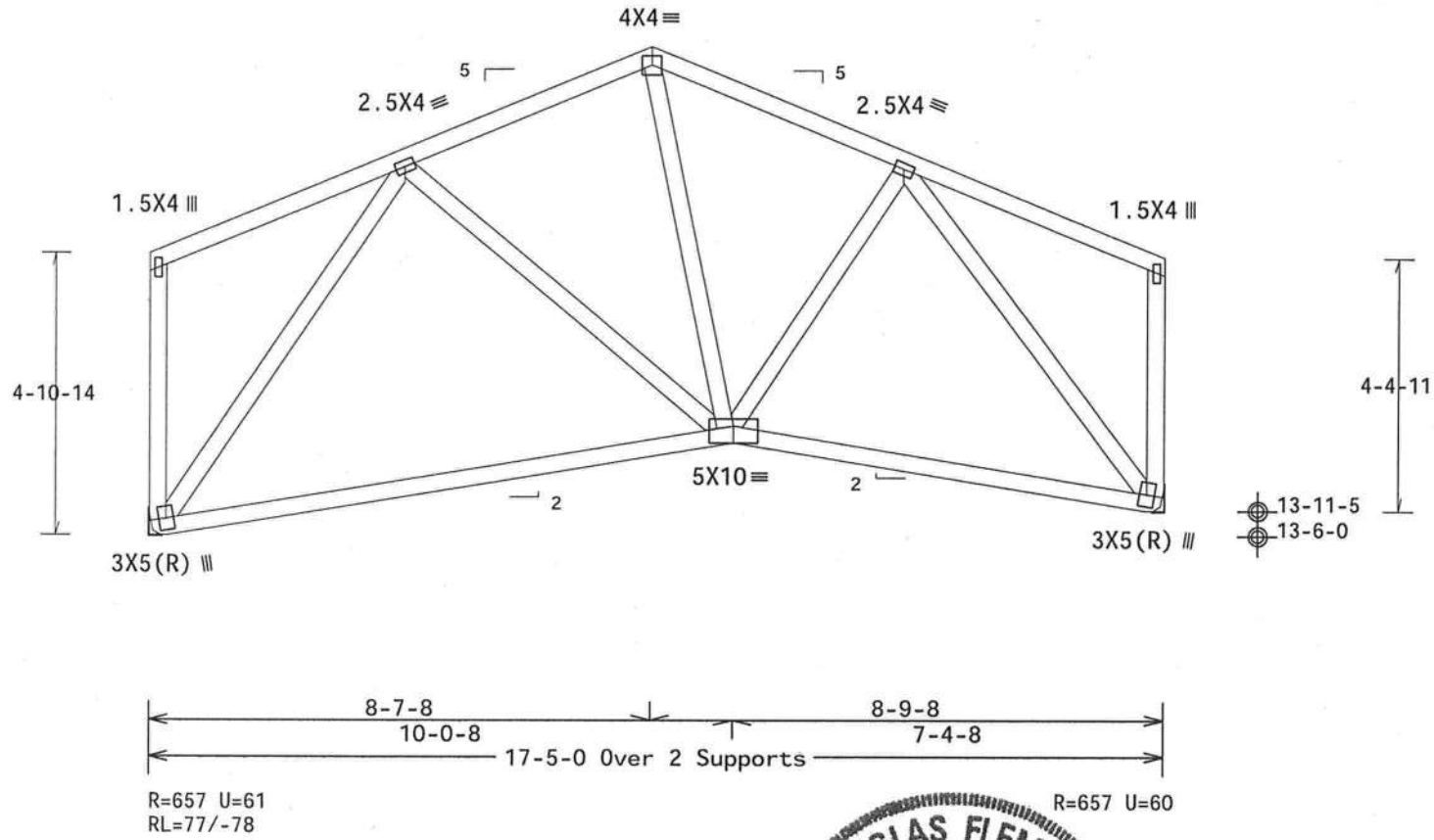

Design Crit: FBC2007Res/TPI-2002(STD)
FT/RT=20%(0%)/10(0)

PLT TYP. Wave

9.02.02.0210.16 QTY 4 FL/-/2/-/-/R/- Scale =.3125"/Ft.

DOUGLAS FLEMING LICENSE No. 66648 STATE OF FLORIDA PROFESSIONAL ENGINEER

11/03/2010

ALPINE
ITW Building Components Group Inc.
Haines City, FL 33844
FL COA #0 278

WARNING TRUSSES REQUIRE EXTREME CARE IN FABRICATION, HANDLING, SHIPPING, INSTALLING AND BRACING. REFER TO BCSI (BUILDING COMPONENT SAFETY INFORMATION), PUBLISHED BY TPI (TRUSS PLATE INSTITUTE, 218 NORTH LEE STREET, SUITE 312, ALEXANDRIA, VA. 22314) AND WTCA (WOOD TRUSS COUNCIL OF AMERICA, 6300 ENTERPRISE LANE, MADISON, WI 53719) FOR SAFETY PRACTICES PRIOR TO PERFORMING THESE FUNCTIONS. UNLESS OTHERWISE INDICATED TOP CHORD SHALL HAVE PROPERLY ATTACHED STRUCTURAL PANELS AND BOTTOM CHORD SHALL HAVE A PROPERLY ATTACHED RIGID CEILING.

IMPORTANT FURNISH A COPY OF THIS DESIGN TO THE INSTALLATION CONTRACTOR. ITW BCG, INC. SHALL NOT BE RESPONSIBLE FOR ANY DEVIATION FROM THIS DESIGN; ANY FAILURE TO BUILD THE TRUSS IN CONFORMANCE WITH TPI; OR FABRICATING, HANDLING, SHIPPING, INSTALLING & BRACING OF TRUSSES. DESIGN CONFORMS WITH APPLICABLE PROVISIONS OF NDS (NATIONAL DESIGN SPEC, BY AF&PA) AND TPI. THE CONNECTOR PLATES ARE MADE OF 20/18/16GA (W,H/SS/K) ASTM A653 GRADE 40/60 (W, K/H,SS) GALV. STEEL. APPLY PLATES TO EACH FACE OF TRUSS AND, UNLESS OTHERWISE LOCATED ON THIS DESIGN, POSITION PER DRAWINGS 1603.2. ANY INSPECTION OF PLATES FOLLOWED BY (1) SHALL BE PER ANNEX A3 OF TPI1-2002 SEC.3. A SEAL ON THIS DRAWING INDICATES ACCEPTANCE OF PROFESSIONAL ENGINEERING RESPONSIBILITY SOLELY FOR THE TRUSS COMPONENT DESIGN SHOWN. THE SUITABILITY AND USE OF THIS COMPONENT FOR ANY BUILDING IS THE RESPONSIBILITY OF THE BUILDING DESIGNER PER ANSI/TPI 1 SEC. 2.

TC LL	20.0 PSF	REF	R2327- 61380
TC DL	7.0 PSF	DATE	11/03/10
BC DL	10.0 PSF	DRW	HCUSR2327 10307139
BC LL	0.0 PSF	HC-ENG	SSB/DF
TOT.LD.	37.0 PSF	SEQN-	341835
DUR.FAC.	1.25	FROM	JRG
SPACING	24.0"	JREF-	1U6L2327Z10

(10700-HOUSE ACCT. BAGGETT RES - T6C)

THIS DWG PREPARED FROM COMPUTER INPUT (LOADS & DIMENSIONS) SUBMITTED BY TRUSS MFR.

Top chord 2x4 SP #2 Dense
Bot chord 2x4 SP #1
Webs 2x4 SP #3
:Rt Wedge 2x4 SP #3:

Left end vertical not exposed to wind pressure.

Bottom chord checked for 10.00 psf non-concurrent live load.

Shim all supports to solid bearing.

120 mph wind, 15.00 ft mean hgt, ASCE 7-05, CLOSED bldg, not located within 4.50 ft from roof edge, CAT II, EXP B, wind TC DL=4.2 psf, wind BC DL=5.0 psf. Iw=1.00 GCpi(+/-)=0.18

Wind reactions based on MWFRS pressures.

In lieu of rigid ceiling use purlins to brace BC @ 24" OC.

Deflection meets L/360 live and L/240 total load.

MWFRS loads based on trusses located at least 30.00 ft. from roof edge.

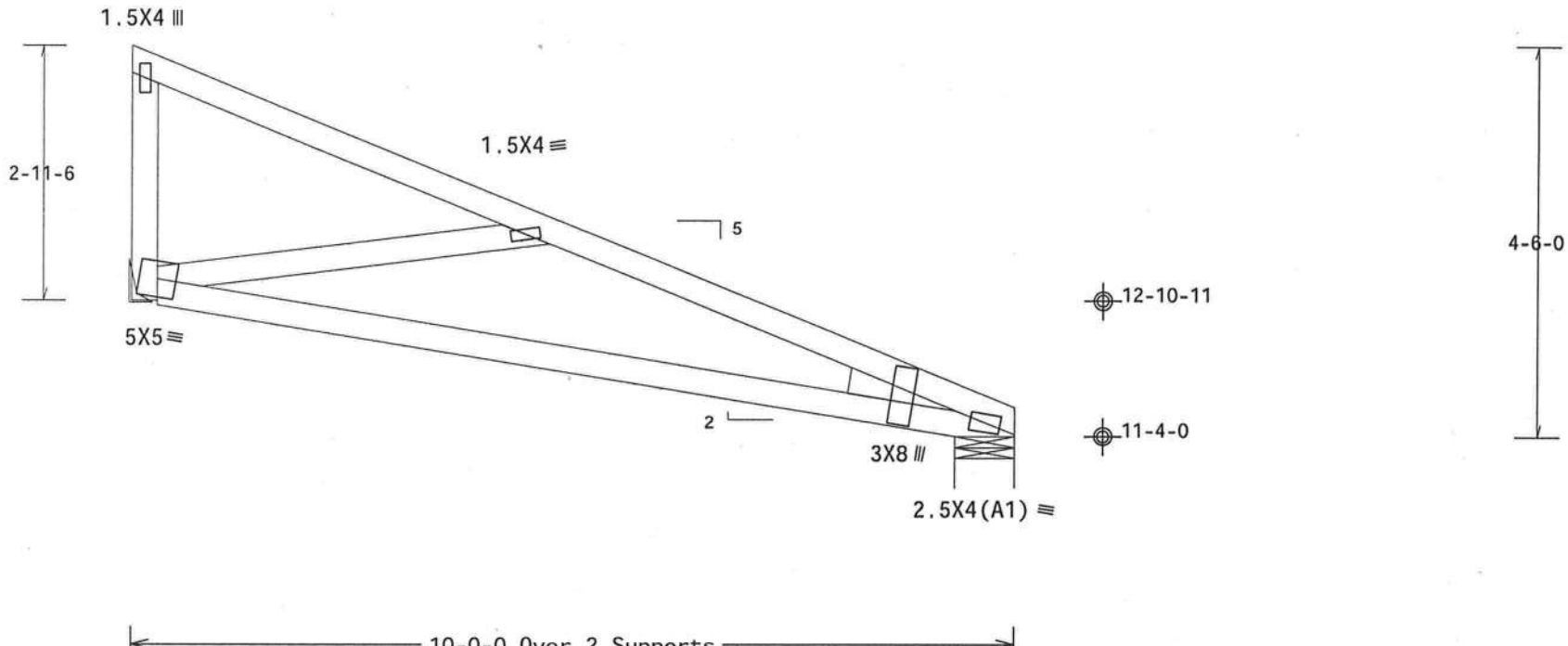

R=377 U=36
RL=40/-103

R=377 U=28 -/-8"

Design Crit: FBC2007Res/TPI-2002(STD)
FT/RT=20%(0%)/10(0)

PLT TYP. Wave

9.01.02.0210.16 QTY:4

FL/-/2/-/-/R/-

Scale =.5"/Ft.

ALPINE
ITW Building Components Group Inc.
Haines City, FL 33844
FL COA #0 278

WARNING TRUSSES REQUIRE EXTREME CARE IN FABRICATION, HANDLING, SHIPPING, INSTALLING AND BRACING. REFER TO BCSI (BUILDING COMPONENT SAFETY INFORMATION), PUBLISHED BY TPI (TRUSS PLATE INSTITUTE, 218 NORTH LEE STREET, SUITE 312, ALEXANDRIA, VA, 22314) AND WTCA (WOOD TRUSS COUNCIL OF AMERICA, 6300 ENTERPRISE LANE, MADISON, WI 53719) FOR SAFETY PRACTICES PRIOR TO PERFORMING THESE FUNCTIONS. UNLESS OTHERWISE INDICATED TOP CHORD SHALL HAVE PROPERLY ATTACHED STRUCTURAL PANELS AND BOTTOM CHORD SHALL HAVE A PROPERLY ATTACHED RIGID CEILING.

IMPORTANTFURNISH A COPY OF THIS DESIGN TO THE INSTALLATION CONTRACTOR. ITW BCG, INC. SHALL NOT BE RESPONSIBLE FOR ANY DEVIATION FROM THIS DESIGN; ANY FAILURE TO BUILD THE TRUSS IN CONFORMANCE WITH TPI; OR FABRICATING, HANDLING, SHIPPING, INSTALLING & BRACING OF TRUSSES.
DESIGN CONFORMS WITH APPLICABLE PROVISIONS OF NDS (NATIONAL DESIGN SPEC. BY AF&PA) AND TPI. ITW BCG CONNECTOR PLATES ARE MADE OF 20/18/16GA (W,H/SS/K) ASTM A653 GRADE 40/60 (W, K/H,SS) GALV. STEEL. APPLY PLATES TO EACH FACE OF TRUSS AND, UNLESS OTHERWISE LOCATED ON THIS DESIGN, POSITION PER DRAWINGS 160A-Z. ANY INSPECTION OF PLATES FOLLOWED BY (i) SHALL BE PER ANNEX A3 OF TPI1-2002 SEC.3. A SEAL ON THIS DRAWING INDICATES ACCEPTANCE OF PROFESSIONAL ENGINEERING RESPONSIBILITY SOLELY FOR THE TRUSS COMPONENT DESIGN SHOWN. THE SUITABILITY AND USE OF THIS COMPONENT FOR ANY BUILDING IS THE RESPONSIBILITY OF THE BUILDING DESIGNER PER ANSI/TPI 1 SEC. 2.

DOUGLAS FLEMING LICENSE No. 66648 STATE OF FLORIDA PROFESSIONAL ENGINEER

11/03/2010

TC LL	20.0 PSF	REF	R2327- 61381
TC DL	7.0 PSF	DATE	11/03/10
BC DL	10.0 PSF	DRW	HCUSR2327 10307138
BC LL	0.0 PSF	HC-ENG	SSB/DF
TOT.LD.	37.0 PSF	SEQN-	341797
DUR.FAC.	1.25	FROM	JRG
SPACING	24.0"	JREF-	1U6L2327Z10

Top chord 2x4 SP #2 Dense :T1 2x4 SP #1:
Bot chord 2x4 SP #2 Dense :B4 2x4 SP #1:
Webs 2x4 SP #3
:Rt Wedge 2x4 SP #3:

Special loads
------(Lumber Dur.Fac.=1.25 / Plate Dur.Fac.=1.25)
TC- From 55 plf at 0.00 to 55 plf at 14.57
TC- From 55 plf at 14.57 to 55 plf at 21.96
TC- From 55 plf at 21.96 to 55 plf at 32.11
TC- From 55 plf at 32.11 to 55 plf at 46.75
BC- From 20 plf at 0.00 to 20 plf at 13.56
BC- From 20 plf at 13.56 to 20 plf at 23.38
BC- From 20 plf at 23.38 to 20 plf at 33.19
BC- From 20 plf at 33.19 to 20 plf at 46.75
BC- 278.00 lb Conc. Load at 7.33
BC- 657.00 lb Conc. Load at 13.33,30.75
BC- 377.00 lb Conc. Load at 36.75

Bottom chord checked for 10.00 psf non-concurrent live load.

WARNING: Furnish a copy of this DWG to the installation contractor. Special care must be taken during handling, shipping and installation of trusses. See "WARNING" note below.

TRUSS HAS NOT BEEN DESIGNED TO SUPPORT ANY LOADS FROM CONVENTIONAL FRAMING

2 COMPLETE TRUSSES REQUIRED

Nail Schedule:0.128"x3.25", min. nails
Top Chord: 1 Row @12.00" o.c.
Bot Chord: 1 Row @12.00" o.c.
Webs : 1 Row @ 4" o.c.
Use equal spacing between rows and stagger nails in each row to avoid splitting.

120 mph wind, 16.83 ft mean hgt, ASCE 7-05, CLOSED bldg, not located within 6.50 ft from roof edge, CAT II, EXP B, wind TC DL=4.2 psf, wind BC DL=5.0 psf. Iw=1.00 GCpi(+/-)=0.18

Wind reactions based on MWFRS pressures.

Calculated horizontal deflection is 0.26" due to live load and 0.23" due to dead load.

In lieu of rigid ceiling use purlins to brace BC @ 24" OC.

Deflection meets L/360 live and L/240 total load.

MWFRS loads based on trusses located at least 16.83 ft. from roof edge.

BUILDING DESIGNER SHALL EVALUATE AND APPROVE LOAD MAGNITUDES and LOCATIONS. THE TRUSS ENGINEER IS NOT RESPONSIBLE FOR LOAD MAGNITUDES AND LOCATIONS.

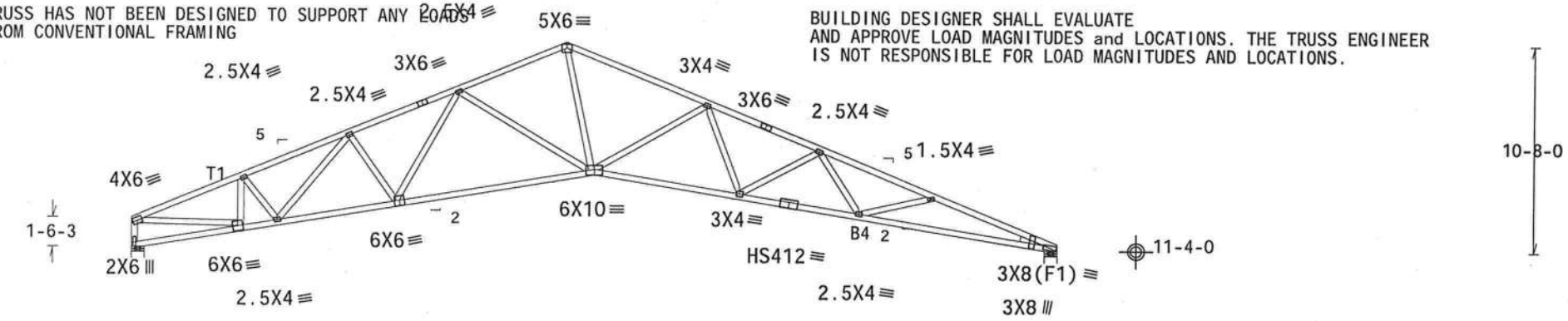

21-11-8 | 24-9-8
23-4-8 | 23-4-8
46-9-0 Over 2 Supports

R=2764 U=627 W=8"
RL=242/-258

R=2764 U=619 W=8"

Design Crit: FBC2007Res/TPI-2002(STD)
FT/RT=20%(0%)/10(0)

PLT TYP. 20 Gauge HS,Wave

9.02.02.0210.16 QTY 4 FL/-/2/-/-/R/- Scale =.125"/Ft.

ALPINE
ITW Building Components Group Inc.
Haines City, FL 33844
FL COA #0 278

WARNING TRUSSES REQUIRE EXTREME CARE IN FABRICATION, HANDLING, SHIPPING, INSTALLING AND BRACING. REFER TO BCSI (BUILDING COMPONENT SAFETY INFORMATION), PUBLISHED BY TPI (TRUSS PLATE INSTITUTE, 218 NORTH LEE STREET, SUITE 312, ALEXANDRIA, VA. 22314) AND WTCA (WOOD TRUSS COUNCIL OF AMERICA, 6300 ENTERPRISE LANE, MADISON, WI 53719) FOR SAFETY PRACTICES PRIOR TO PERFORMING THESE FUNCTIONS. UNLESS OTHERWISE INDICATED TOP CHORD SHALL HAVE PROPERLY ATTACHED STRUCTURAL PANELS AND BOTTOM CHORD SHALL HAVE A PROPERLY ATTACHED RIGID CEILING.

IMPORTANTFURNISH A COPY OF THIS DESIGN TO THE INSTALLATION CONTRACTOR. ITW BCG, INC. SHALL NOT BE RESPONSIBLE FOR ANY DEVIATION FROM THIS DESIGN; ANY FAILURE TO BUILD THE TRUSS IN COMFORMANCE WITH TPI; OR FABRICATING, HANDLING, SHIPPING, INSTALLING & BRACING OF TRUSSES.
DESIGN CONFORMS WITH APPLICABLE PROVISIONS OF NDS (NATIONAL DESIGN SPEC, BY AF&PA) AND TPI. ITW BCG CONNECTOR PLATES ARE MADE OF 20/18/16GA (W,H/SS/K) ASTM A653 GRADE 40/60 (W, K/H,SS) GALV. STEEL. APPLY PLATES TO EACH FACE OF TRUSS AND, UNLESS OTHERWISE LOCATED ON THIS DESIGN, POSITION PER DRAWINGS 1603-Z. ANY INSPECTION OF PLATES FOLLOWED BY (I) SHALL BE PER ANNEX A3 OF TPI1-2002 SEC.3. A SEAL ON THIS DRAWING INDICATES ACCEPTANCE OF PROFESSIONAL ENGINEERING RESPONSIBILITY SOLELY FOR THE TRUSS COMPONENT DESIGN SHOWN. THE SUITABILITY AND USE OF THIS COMPONENT FOR ANY BUILDING IS THE RESPONSIBILITY OF THE BUILDING DESIGNER PER ANSI/TPI 1 SEC. 2.

DOUGLAS FLEMING LICENSE No. 66648 STATE OF FLORIDA PROFESSIONAL ENGINEER
11/03/2010

TC LL	20.0 PSF	REF	R2327- 61382
TC DL	7.0 PSF	DATE	11/03/10
BC DL	10.0 PSF	DRW	HCUSR2327 10307106
BC LL	0.0 PSF	HC-ENG	SSB/DF
TOT.LD.	37.0 PSF	SEQN-	341849
DUR.FAC.	1.25	FROM	JRG
SPACING	24.0"	JREF-	1U6L2327Z10

(10700-HOUSE ACCT. BAGGETT RES - T6)

Top chord 2x4 SP #2 Dense :T1 2x4 SP #1:
Bot chord 2x4 SP #2 Dense :B4 2x4 SP #1:
Webs 2x4 SP #3 :W2 2x4 SP #2 Dense:
:Rt Wedge 2x4 SP #3:

Calculated horizontal deflection is 0.31" due to live load and 0.27" due to dead load.

Bottom chord checked for 10.00 psf non-concurrent live load.

Calculated vertical deflection is 0.57" due to live load and 0.51" due to dead load at X = 30-11-2.

MWFRS loads based on trusses located at least 16.83 ft. from roof edge.

120 mph wind, 16.83 ft mean hgt, ASCE 7-05, CLOSED bldg, not located within 6.50 ft from roof edge, CAT II, EXP B, wind TC DL=4.2 psf, wind BC DL=5.0 psf. Iw=1.00 GCpi(+/-)=0.18

Wind reactions based on MWFRS pressures.

In lieu of rigid ceiling use purlins to brace BC @ 24" OC.

Deflection meets L/360 live and L/240 total load.

WARNING: Furnish a copy of this DWG to the installation contractor. Special care must be taken during handling, shipping and installation of trusses. See "WARNING" note below.

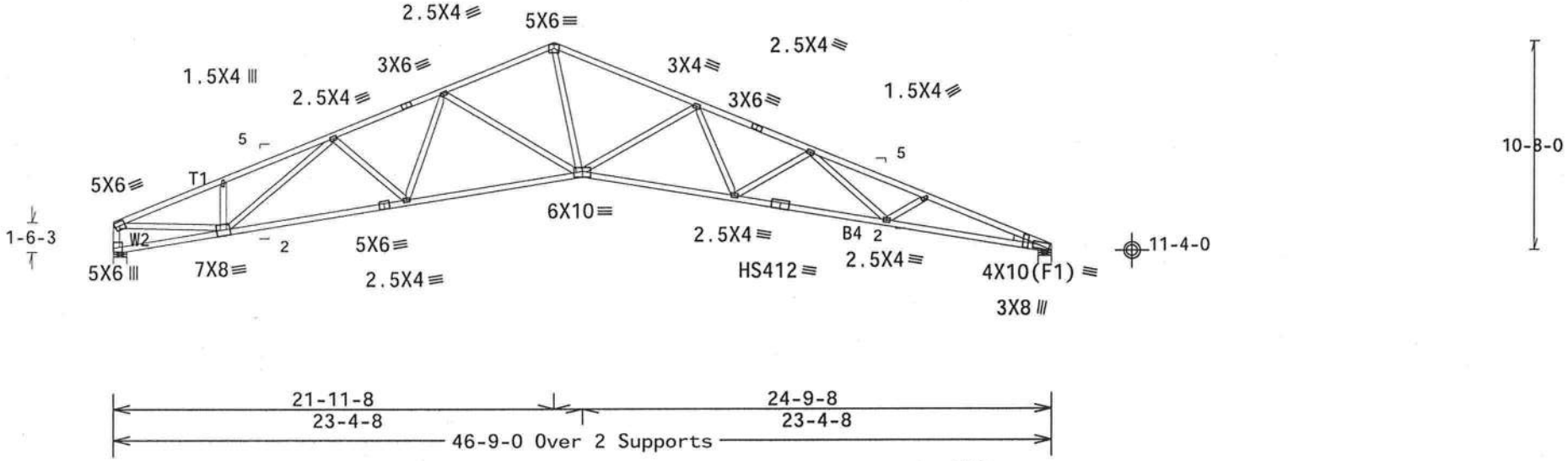

R=1758 U=82 W=8"
RL=242/-258

R=1780 U=94 W=8"

Design Crit: FBC2007Res/TPI-2002(STD)
FT/RT=20%(0%)/10(0)

PLT TYP. 20 Gauge HS,Wave

9.02.02.0210.16 QTY 5 FL/-/2/-/-/R/- Scale =.125"/Ft.

ALPINE
ITW Building Components Group Inc.
Haines City, FL 33844
FL COA #0 278

WARNING TRUSSES REQUIRE EXTREME CARE IN FABRICATION, HANDLING, SHIPPING, INSTALLING AND BRACING. REFER TO BCSI (BUILDING COMPONENT SAFETY INFORMATION), PUBLISHED BY TPI (TRUSS PLATE INSTITUTE, 218 NORTH LEE STREET, SUITE 312, ALEXANDRIA, VA, 22314) AND WTCA (WOOD TRUSS COUNCIL OF AMERICA, 6300 ENTERPRISE LANE, MADISON, WI 53719) FOR SAFETY PRACTICES PRIOR TO PERFORMING THESE FUNCTIONS. UNLESS OTHERWISE INDICATED TOP CHORD SHALL HAVE PROPERLY ATTACHED STRUCTURAL PANELS AND BOTTOM CHORD SHALL HAVE A PROPERLY ATTACHED RIGID CEILING.

IMPORTANTFURNISH A COPY OF THIS DESIGN TO THE INSTALLATION CONTRACTOR. ITW BCG, INC. SHALL NOT BE RESPONSIBLE FOR ANY DEVIATION FROM THIS DESIGN; ANY FAILURE TO BUILD THE TRUSS IN CONFORMANCE WITH TPI; OR FABRICATING, HANDLING, SHIPPING, INSTALLING & BRACING OF TRUSSES. THIS DESIGN CONFORMS WITH APPLICABLE PROVISIONS OF NDS (NATIONAL DESIGN SPEC. BY AF&PA) AND TPI. ITW BCG CONNECTOR PLATES ARE MADE OF 20/18/16GA (W,H/SS/K) ASTM A653 GRADE 40/60 (W, K/H,SS) GALV. STEEL. APPLY PLATES TO EACH FACE OF TRUSS AND, UNLESS OTHERWISE LOCATED ON THIS DESIGN, POSITION PER DRAWINGS 160A. ANY INSPECTION OF PLATES FOLLOWED BY (i) SHALL BE PER ANNEX A3 OF TPI1-2002 SEC.3. A SEAL ON THIS DRAWING INDICATES ACCEPTANCE OF PROFESSIONAL ENGINEERING RESPONSIBILITY SOLELY FOR THE TRUSS COMPONENT DESIGN SHOWN. THE SUITABILITY AND USE OF THIS COMPONENT FOR ANY BUILDING IS THE RESPONSIBILITY OF THE BUILDING DESIGNER PER ANSI/TPI 1 SEC. 2.

DOUGLAS FLEMING LICENSE No.66648 STATE OF FLORIDA PROFESSIONAL ENGINEER

11/03/2010

TC LL	20.0 PSF	REF	R2327- 61383
TC DL	7.0 PSF	DATE	11/03/10
BC DL	10.0 PSF	DRW	HCUSR2327 10307137
BC LL	0.0 PSF	HC-ENG	SSB/DF
TOT.LD.	37.0 PSF	SEQN-	341779
DUR.FAC.	1.25	FROM	JRG
SPACING	24.0"	JREF-	1U6L2327Z10

(10700-HOUSE ACCT. BAGGETT RES - T7)

Top chord 2x4 SP #2 Dense
Bot chord 2x6 SP #2 Dense
Webs 2x4 SP #3

End verticals not exposed to wind pressure.

In lieu of structural panels or rigid ceiling use purlins to brace all flat TC @ 24" OC, all BC @ 24" OC.

Deflection meets L/360 live and L/240 total load.

120 mph wind, 15.00 ft mean hgt, ASCE 7-05, CLOSED bldg, Located anywhere in roof, CAT II, EXP B, wind TC DL=4.2 psf, wind BC DL=5.0 psf. Iw=1.00 GCpi(+/-)=0.18

Wind reactions based on MWFRS pressures.

Girder supports 7-0-0 span to BC one face and 2-0-0 span to TC/BC split opposite face.

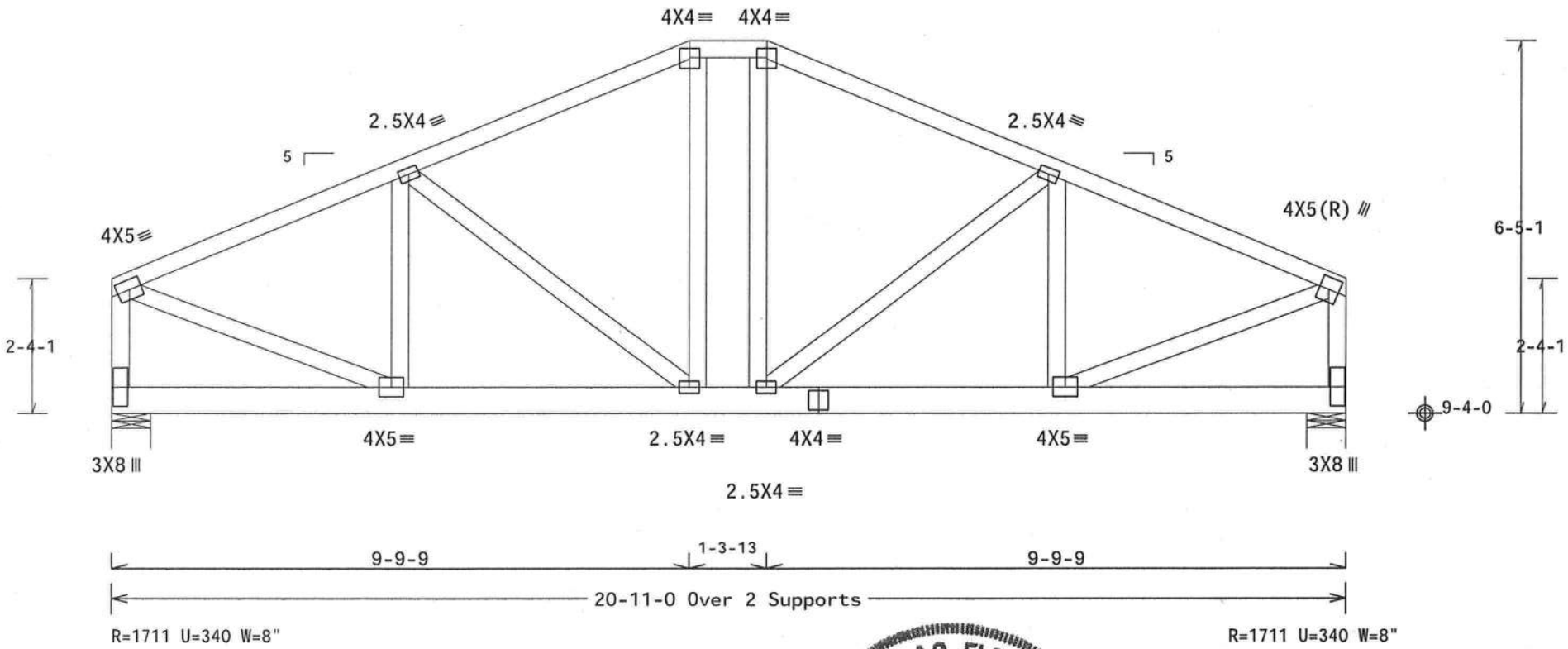

Design Crit: FBC2007Res/TPI-2002(STD)

PLT TYP. Wave

FT/RT=20%(0%)/10(0)

9.01.02.0210.16 QTY 1

FL/-/2/-/-/R/-

Scale =.375"/Ft.

ALPINE
ITW Building Components Group Inc.
Haines City, FL 33844
FL COA #0 278

WARNING TRUSSES REQUIRE EXTREME CARE IN FABRICATION, HANDLING, SHIPPING, INSTALLING AND BRACING. REFER TO BCSI (BUILDING COMPONENT SAFETY INFORMATION), PUBLISHED BY TPI (TRUSS PLATE INSTITUTE, 218 NORTH LEE STREET, SUITE 312, ALEXANDRIA, VA, 22314) AND WTCA (WOOD TRUSS COUNCIL OF AMERICA, 6300 ENTERPRISE LANE, MADISON, WI 53719) FOR SAFETY PRACTICES PRIOR TO PERFORMING THESE FUNCTIONS. UNLESS OTHERWISE INDICATED TOP CHORD SHALL HAVE PROPERLY ATTACHED STRUCTURAL PANELS AND BOTTOM CHORD SHALL HAVE A PROPERLY ATTACHED RIGID CEILING.

IMPORTANT FURNISH A COPY OF THIS DESIGN TO THE INSTALLATION CONTRACTOR. ITW BCG, INC. SHALL NOT BE RESPONSIBLE FOR ANY DEVIATION FROM THIS DESIGN; ANY FAILURE TO BUILD THE TRUSS IN CONFORMANCE WITH TPI; OR FABRICATING, HANDLING, SHIPPING, INSTALLING & BRACING OF TRUSSES. DESIGN CONFORMS WITH APPLICABLE PROVISIONS OF NDS (NATIONAL DESIGN SPEC, BY AF&PA) AND TPI. ITW BCG CONNECTOR PLATES ARE MADE OF 20/18/16GA (W,H/SS/K) ASTM A653 GRADE 40/60 (W, K/H,SS) GALV. STEEL. APPLY PLATES TO EACH FACE OF TRUSS AND, UNLESS OTHERWISE LOCATED ON THIS DESIGN, POSITION PER DRAWINGS 160A. ANY INSPECTION OF PLATES FOLLOWED BY (i) SHALL BE PER ANNEX A3 OF TPI1-2002 SEC.3. A SEAL ON THIS DRAWING INDICATES ACCEPTANCE OF PROFESSIONAL ENGINEERING RESPONSIBILITY SOLELY FOR THE TRUSS COMPONENT DESIGN SHOWN. THE SUITABILITY AND USE OF THIS COMPONENT FOR ANY BUILDING IS THE RESPONSIBILITY OF THE BUILDING DESIGNER PER ANSI/TPI 1 SEC. 2.

DOUGLAS FLEMING LICENSE No. 66648 STATE OF FLORIDA PROFESSIONAL ENGINEER

11/03/2010

TC LL	20.0 PSF	REF	R2327- 61384
TC DL	7.0 PSF	DATE	11/03/10
BC DL	10.0 PSF	DRW	HCUSR2327 10307104
BC LL	0.0 PSF	HC-ENG	SSB/DF
TOT.LD.	37.0 PSF	SEQN-	338322
DUR.FAC.	1.25	FROM	JRG
SPACING	24.0"	JREF-	1U6L2327Z10

(10700-HOUSE ACCT. BAGGETT RES - T8)

Top chord 2x4 SP #2 Dense
Bot chord 2x4 SP #2 Dense
Webs 2x4 SP #3

End verticals exposed to wind pressure. Deflection meets L/240 criteria for brittle and flexible wall coverings.

In lieu of structural panels or rigid ceiling use purlins to brace all flat TC @ 24" OC, all BC @ 24" OC.

Deflection meets L/360 live and L/240 total load.

120 mph wind, 15.00 ft mean hgt, ASCE 7-05, CLOSED bldg, Located anywhere in roof, CAT II, EXP B, wind TC DL=4.2 psf, wind BC DL=5.0 psf. Iw=1.00 GCpi(+/-)=0.18

Wind reactions based on MWFRS pressures.

Roof overhang supports 2.00 psf soffit load.

Bottom chord checked for 10.00 psf non-concurrent live load.

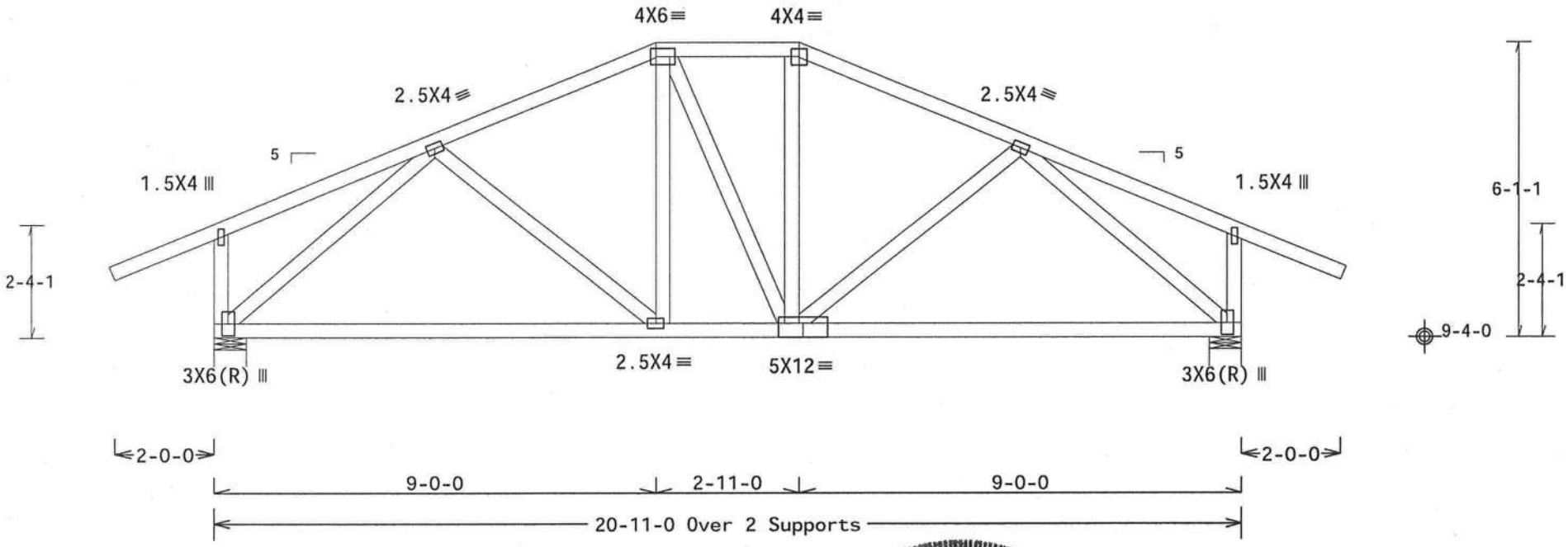

R=908 U=195 W=8"
RL=190/-190

R=908 U=195 W=8"

Design Crit: FBC2007Res/TPI-2002(STD)
FT/RT=20%(0%)/10(0)

PLT TYP. Wave

9.01.02.0210.16 QTY:

FL/-/2/-/-/R/-

Scale =.3125"/Ft.

DOUGLAS FLEMING LICENSE No. 66648 STATE OF FLORIDA PROFESSIONAL ENGINEER

11/03/2010

ALPINE
ITW Building Components Group Inc.
Haines City, FL 33844
FL COA #0 278

WARNING TRUSSES REQUIRE EXTREME CARE IN FABRICATION, HANDLING, SHIPPING, INSTALLING AND BRACING. REFER TO BCSI (BUILDING COMPONENT SAFETY INFORMATION), PUBLISHED BY TPI (TRUSS PLATE INSTITUTE, 218 NORTH LEE STREET, SUITE 312, ALEXANDRIA, VA, 22314) AND WTCA (WOOD TRUSS COUNCIL OF AMERICA, 6300 ENTERPRISE LANE, MADISON, WI 53719) FOR SAFETY PRACTICES PRIOR TO PERFORMING THESE FUNCTIONS. UNLESS OTHERWISE INDICATED TOP CHORD SHALL HAVE PROPERLY ATTACHED STRUCTURAL PANELS AND BOTTOM CHORD SHALL HAVE A PROPERLY ATTACHED RIGID CEILING.

IMPORTANT FURNISH A COPY OF THIS DESIGN TO THE INSTALLATION CONTRACTOR. ITW BCG, INC. SHALL NOT BE RESPONSIBLE FOR ANY DEVIATION FROM THIS DESIGN; ANY FAILURE TO BUILD THE TRUSS IN COMFORMANCE WITH TPI; OR FABRICATING, HANDLING, SHIPPING, INSTALLING & BRACING OF TRUSSES. DESIGN CONFORMS WITH APPLICABLE PROVISIONS OF NDS (NATIONAL DESIGN SPEC. BY AF&PA) AND TPI. ITW BCG CONNECTOR PLATES ARE MADE OF 20/18/16GA (W,H/SS/K) ASTM A653 GRADE 40/60 (W, K/H,SS) GALV. STEEL. APPLY PLATES TO EACH FACE OF TRUSS AND, UNLESS OTHERWISE LOCATED ON THIS DESIGN, POSITION PER DRAWINGS 160A-Z. ANY INSPECTION OF PLATES FOLLOWED BY (i) SHALL BE PER ANNEX A3 OF TPI1-2002 SEC.3. A SEAL ON THIS DRAWING INDICATES ACCEPTANCE OF PROFESSIONAL ENGINEERING RESPONSIBILITY SOLELY FOR THE TRUSS COMPONENT DESIGN SHOWN. THE SUITABILITY AND USE OF THIS COMPONENT FOR ANY BUILDING IS THE RESPONSIBILITY OF THE BUILDING DESIGNER PER ANSI/TPI 1 SEC. 2.

TC LL	20.0 PSF	REF	R2327- 61385
TC DL	7.0 PSF	DATE	11/03/10
BC DL	10.0 PSF	DRW	HCUSR2327 10307105
BC LL	0.0 PSF	HC-ENG	SSB/DF
TOT.LD.	37.0 PSF	SEQN-	350769
DUR.FAC.	1.25	FROM	JRG
SPACING	24.0"	JREF-	1U6L2327Z10

(10700-HOUSE ACCT. BAGGETT RES - T9)

Top chord 2x4 SP #2 Dense
Bot chord 2x4 SP #2 Dense
Webs 2x4 SP #3

End verticals not exposed to wind pressure.

Roof overhang supports 2.00 psf soffit load.

#1 hip supports 7-0-0 jacks with no webs.

Deflection meets L/360 live and L/240 total load.

120 mph wind, 15.00 ft mean hgt, ASCE 7-05, CLOSED bldg, Located anywhere in roof, CAT II, EXP B, wind TC DL=4.2 psf, wind BC DL=5.0 psf. Iw=1.00 GCpi(+/-)=0.18

Wind reactions based on MWFRS pressures.

In lieu of structural panels or rigid ceiling use purlins to brace all flat TC @ 24" OC, all BC @ 24" OC.

Left side jacks have 7-0-0 setback with 0-0-0 cant and 2-1-6 overhang. End jacks have 7-0-0 setback with 0-0-0 cant and 2-1-6 overhang. Right side jacks have 7-0-0 setback with 0-0-0 cant and 2-1-6 overhang.

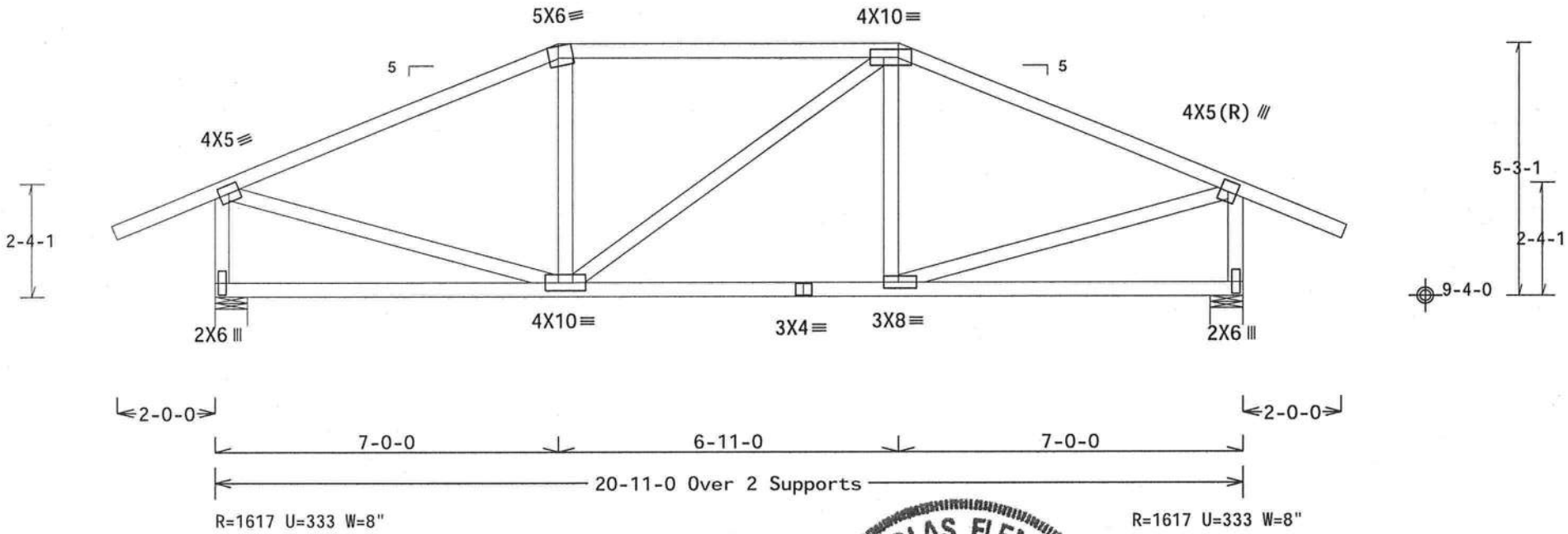

Design Crit: FBC2007Res/TPI-2002(STD)
FT/RT=20%(0%)/10(0)

PLT TYP. Wave

9.01.02.0210.16

QTY:

FL/-/2/-/-/R/-

Scale =.3125"/Ft.

ALPINE
ITW Building Components Group Inc.
Haines City, FL 33844
FL COA #0 278

WARNING TRUSSES REQUIRE EXTREME CARE IN FABRICATION, HANDLING, SHIPPING, INSTALLING AND BRACING. REFER TO BCSI (BUILDING COMPONENT SAFETY INFORMATION), PUBLISHED BY TPI (TRUSS PLATE INSTITUTE, 218 NORTH LEE STREET, SUITE 312, ALEXANDRIA, VA, 22314) AND WTCA (WOOD TRUSS COUNCIL OF AMERICA, 6300 ENTERPRISE LANE, MADISON, WI 53719) FOR SAFETY PRACTICES PRIOR TO PERFORMING THESE FUNCTIONS. UNLESS OTHERWISE INDICATED TOP CHORD SHALL HAVE PROPERLY ATTACHED STRUCTURAL PANELS AND BOTTOM CHORD SHALL HAVE A PROPERLY ATTACHED RIGID CEILING.

IMPORTANT FURNISH A COPY OF THIS DESIGN TO THE INSTALLATION CONTRACTOR. ITW BCG, INC. SHALL NOT BE RESPONSIBLE FOR ANY DEVIATION FROM THIS DESIGN; ANY FAILURE TO BUILD THE TRUSS IN CONFORMANCE WITH TPI; OR FABRICATING, HANDLING, SHIPPING, INSTALLING & BRACING OF TRUSSES.
DESIGN CONFORMS WITH APPLICABLE PROVISIONS OF NDS (NATIONAL DESIGN SPEC. BY AF&PA) AND TPI. ITW BCG CONNECTOR PLATES ARE MADE OF 20/18/16GA (W,H/SS/K) ASTM A653 GRADE 40/60 (W, K/H,SS) GALV. STEEL. APPLY PLATES TO EACH FACE OF TRUSS AND, UNLESS OTHERWISE LOCATED ON THIS DESIGN, POSITION PER DRAWINGS 160A-Z. ANY INSPECTION OF PLATES FOLLOWED BY (;) SHALL BE PER ANNEX A3 OF TPI1-2002 SEC.3. A SEAL ON THIS DRAWING INDICATES ACCEPTANCE OF PROFESSIONAL ENGINEERING RESPONSIBILITY SOLELY FOR THE TRUSS COMPONENT DESIGN SHOWN. THE SUITABILITY AND USE OF THIS COMPONENT FOR ANY BUILDING IS THE RESPONSIBILITY OF THE BUILDING DESIGNER PER ANSI/TPI 1 SEC. 2.

DOUGLAS FLEMING LICENSE No. 66648 STATE OF FLORIDA PROFESSIONAL ENGINEER

11/03/2010

TC LL	20.0 PSF	REF R2327- 61386
TC DL	7.0 PSF	DATE 11/03/10
BC DL	10.0 PSF	DRW HCUSR2327 10307153
BC LL	0.0 PSF	HC-ENG SSB/DF
TOT.LD.	37.0 PSF	SEQN- 338334
DUR.FAC.	1.25	FROM JRG
SPACING	24.0"	JREF- 1U6L2327Z10

(10700-HOUSE ACCT. BAGGETT RES - T12)

Top chord 2x4 SP #2 Dense
Bot chord 2x4 SP #2 Dense
Webs 2x4 SP #3

Roof overhang supports 2.00 psf soffit load.

In lieu of rigid ceiling use purlins to brace BC @ 24" OC.

Deflection meets L/360 live and L/240 total load.

120 mph wind, 15.00 ft mean hgt, ASCE 7-05, CLOSED bldg, Located anywhere in roof, CAT II, EXP B, wind TC DL=4.2 psf, wind BC DL=5.0 psf. Iw=1.00 GCpi(+/-)=0.18

Wind reactions based on MWFRS pressures.

Bottom chord checked for 10.00 psf non-concurrent live load.

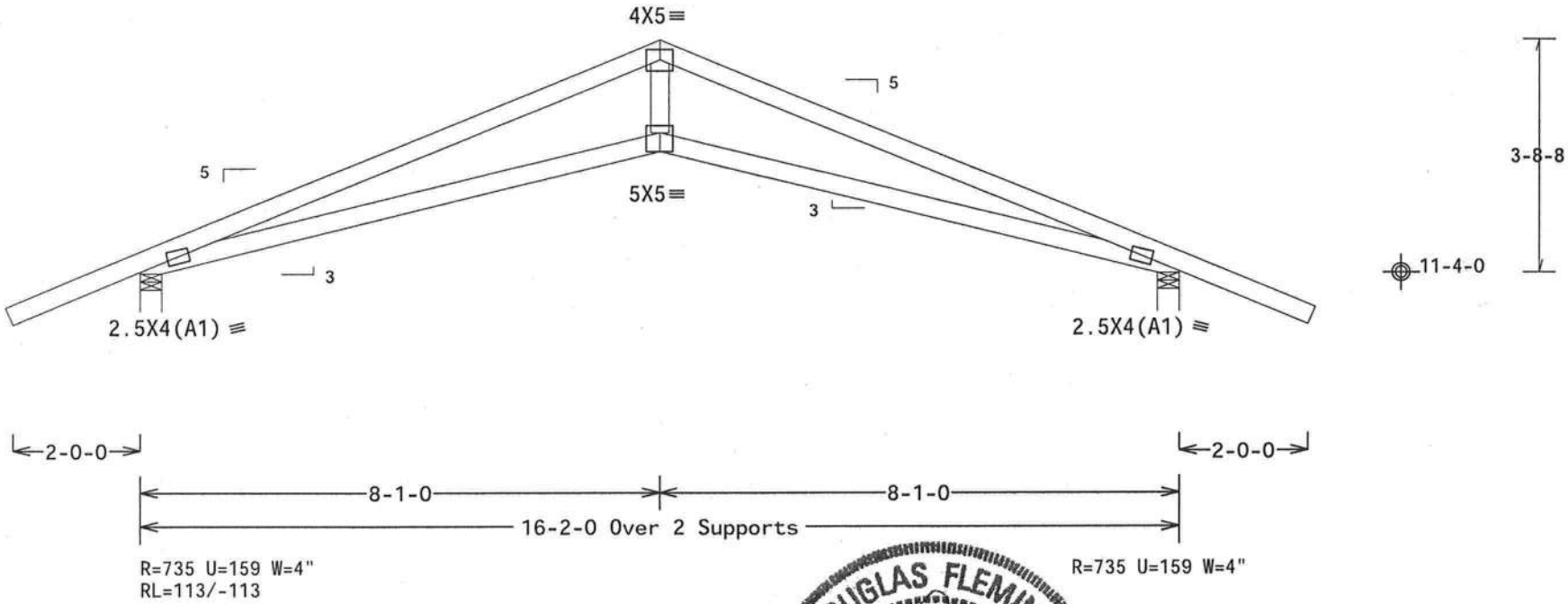

Design Crit: FBC2007Res/TPI-2002(STD)
FT/RT=20%(0%)/10(0)

PLT TYP. Wave

09.01.02.0210.16 QTY:6

FL/-/2/-/-/R/-

Scale =.375"/Ft.

DOUGLAS FLEMING LICENSE No.66648 STATE OF FLORIDA PROFESSIONAL ENGINEER

11/03/2010

ALPINE
ITW Building Components Group Inc.
Haines City, FL 33844
FL COA #0 278

WARNING TRUSSES REQUIRE EXTREME CARE IN FABRICATION, HANDLING, SHIPPING, INSTALLING AND BRACING. REFER TO BCSI (BUILDING COMPONENT SAFETY INFORMATION), PUBLISHED BY TPI (TRUSS PLATE INSTITUTE, 218 NORTH LEE STREET, SUITE 312, ALEXANDRIA, VA, 22314) AND WTCA (WOOD TRUSS COUNCIL OF AMERICA, 6300 ENTERPRISE LANE, MADISON, WI 53719) FOR SAFETY PRACTICES PRIOR TO PERFORMING THESE FUNCTIONS. UNLESS OTHERWISE INDICATED TOP CHORD SHALL HAVE PROPERLY ATTACHED STRUCTURAL PANELS AND BOTTOM CHORD SHALL HAVE A PROPERLY ATTACHED RIGID CEILING.

IMPORTANT FURNISH A COPY OF THIS DESIGN TO THE INSTALLATION CONTRACTOR. ITW BCG, INC. SHALL NOT BE RESPONSIBLE FOR ANY DEVIATION FROM THIS DESIGN; ANY FAILURE TO BUILD THE TRUSS IN CONFORMANCE WITH TPI; OR FABRICATING, HANDLING, SHIPPING, INSTALLING & BRACING OF TRUSSES. DESIGN CONFORMS WITH APPLICABLE PROVISIONS OF NDS (NATIONAL DESIGN SPEC, BY AF&PA) AND TPI. ITW BCG CONNECTOR PLATES ARE MADE OF 20/18/16GA (W,H/SS/K) ASTM A653 GRADE 40/60 (W, K/H,SS) GALV. STEEL. APPLY PLATES TO EACH FACE OF TRUSS AND, UNLESS OTHERWISE LOCATED ON THIS DESIGN, POSITION PER DRAWINGS 160A-Z. ANY INSPECTION OF PLATES FOLLOWED BY (i) SHALL BE PER ANNEX A3 OF TPI1-2002 SEC.3. A SEAL ON THIS DRAWING INDICATES ACCEPTANCE OF PROFESSIONAL ENGINEERING RESPONSIBILITY SOLELY FOR THE TRUSS COMPONENT DESIGN SHOWN. THE SUITABILITY AND USE OF THIS COMPONENT FOR ANY BUILDING IS THE RESPONSIBILITY OF THE BUILDING DESIGNER PER ANSI/TPI 1 SEC. 2.

TC LL	20.0 PSF	REF	R2327- 61387
TC DL	7.0 PSF	DATE	11/03/10
BC DL	10.0 PSF	DRW	HCUSR2327 10307131
BC LL	0.0 PSF	HC-ENG	SSB/DF
TOT.LD.	37.0 PSF	SEQN-	341853
DUR.FAC.	1.25	FROM	JRG
SPACING	24.0"	JREF-	1U6L2327Z10

(10700-HOUSE ACCT. BAGGETT RES - T13)

Top chord 2x4 SP #2 Dense
Bot chord 2x4 SP #2 Dense

Roof overhang supports 2.00 psf soffit load.

In lieu of rigid ceiling use purlins to brace BC @ 24" OC.

Deflection meets L/360 live and L/240 total load.

120 mph wind, 15.00 ft mean hgt, ASCE 7-05, CLOSED bldg, not located within 4.50 ft from roof edge, CAT II, EXP B, wind TC DL=4.2 psf, wind BC DL=5.0 psf. Iw=1.00 GCpi(+/-)=0.18

Wind reactions based on MWFRS pressures.

Bottom chord checked for 10.00 psf non-concurrent live load.

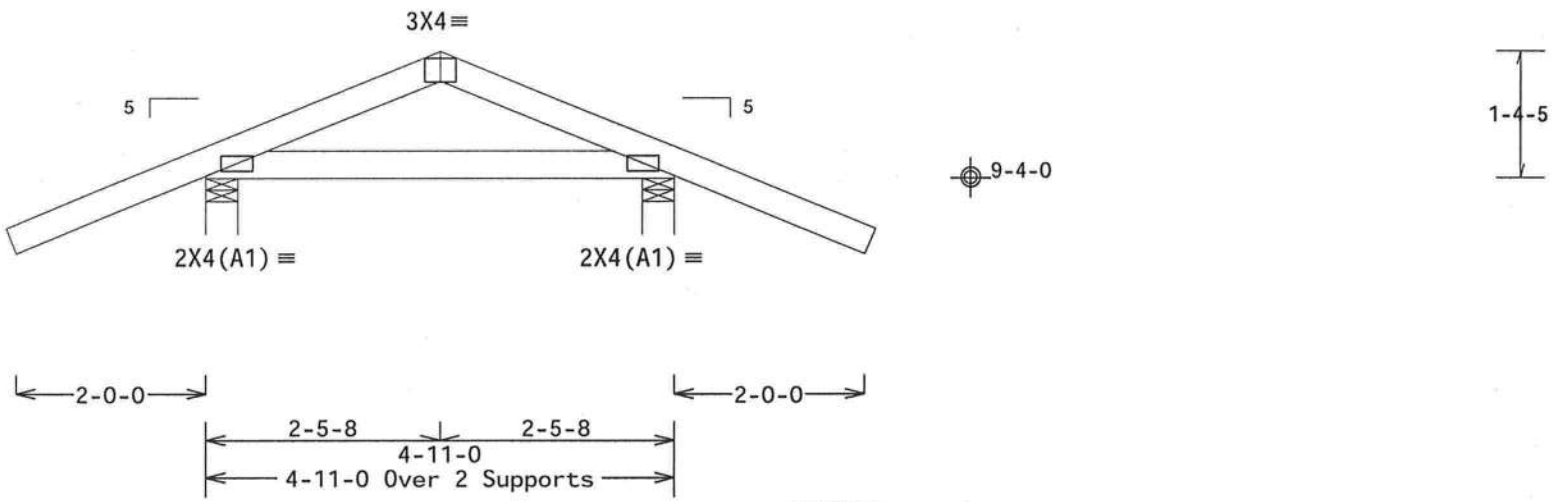

R=307 U=74 W=4"
RL=62/-62

R=307 U=74 W=4"

Design Crit: FBC2007Res/TPI-2002(STD)
FT/RT=20%(0%)/10(0)

PLT TYP. Wave

9.01.02.0210.16 QTY 12 FL/-/2/-/-/R/- Scale =.5"/Ft.

ALPINE
ITW Building Components Group Inc.
Haines City, FL 33844
FL COA #0 278

WARNING TRUSSES REQUIRE EXTREME CARE IN FABRICATION, HANDLING, SHIPPING, INSTALLING AND BRACING. REFER TO BCSI (BUILDING COMPONENT SAFETY INFORMATION), PUBLISHED BY TPI (TRUSS PLATE INSTITUTE, 218 NORTH LEE STREET, SUITE 312, ALEXANDRIA, VA. 22314) AND WTCA (WOOD TRUSS COUNCIL OF AMERICA, 6300 ENTERPRISE LANE, MADISON, WI 53719) FOR SAFETY PRACTICES PRIOR TO PERFORMING THESE FUNCTIONS. UNLESS OTHERWISE INDICATED TOP CHORD SHALL HAVE PROPERLY ATTACHED STRUCTURAL PANELS AND BOTTOM CHORD SHALL HAVE A PROPERLY ATTACHED RIGID CEILING.

IMPORTANT FURNISH A COPY OF THIS DESIGN TO THE INSTALLATION CONTRACTOR. ITW BCG, INC. SHALL NOT BE RESPONSIBLE FOR ANY DEVIATION FROM THIS DESIGN; ANY FAILURE TO BUILD THE TRUSS IN CONFORMANCE WITH TPI; OR FABRICATING, HANDLING, SHIPPING, INSTALLING & BRACING OF TRUSSES.
DESIGN CONFORMS WITH APPLICABLE PROVISIONS OF NDS (NATIONAL DESIGN SPEC, BY AF&PA) AND TPI. ITW BCG CONNECTOR PLATES ARE MADE OF 20/18/16GA (W,H/SS/K) ASTM A653 GRADE 40/60 (W, K/H,SS) GALV. STEEL. APPLY PLATES TO EACH FACE OF TRUSS AND, UNLESS OTHERWISE LOCATED ON THIS DESIGN, POSITION PER DRAWINGS 160A. ANY INSPECTION OF PLATES FOLLOWED BY (i) SHALL BE PER ANNEX A3 OF TPI1-2002 SEC.3. A SEAL ON THIS DRAWING INDICATES ACCEPTANCE OF PROFESSIONAL ENGINEERING RESPONSIBILITY SOLELY FOR THE TRUSS COMPONENT DESIGN SHOWN. THE SUITABILITY AND USE OF THIS COMPONENT FOR ANY BUILDING IS THE RESPONSIBILITY OF THE BUILDING DESIGNER PER ANSI/TPI 1 SEC. 2.

DOUGLAS FLEMING LICENSE No. 66648 STATE OF FLORIDA PROFESSIONAL ENGINEER
11/03/2010

TC LL	20.0 PSF	REF	R2327- 61388
TC DL	7.0 PSF	DATE	11/03/10
BC DL	10.0 PSF	DRW	HCUSR2327 10307148
BC LL	0.0 PSF	HC-ENG	SSB/DF
TOT.LD.	37.0 PSF	SEQN-	337932
DUR.FAC.	1.25	FROM	JRG
SPACING	24.0"	JREF-	1U6L2327Z10

(10700-HOUSE ACCT. BAGGETT RES - T14)

Top chord 2x4 SP #2 Dense
Bot chord 2x4 SP #2 Dense
Webs 2x4 SP #3

Roof overhang supports 2.00 psf soffit load.

In lieu of rigid ceiling use purlins to brace BC @ 24" OC.

Deflection meets L/360 live and L/240 total load.

120 mph wind, 15.00 ft mean hgt, ASCE 7-05, CLOSED bldg, not located within 4.50 ft from roof edge, CAT II, EXP B, wind TC DL=4.2 psf, wind BC DL=5.0 psf. Iw=1.00 GCpi(+/-)=0.18

Wind reactions based on MWFRS pressures.

Bottom chord checked for 10.00 psf non-concurrent live load.

MWFRS loads based on trusses located at least 7.50 ft. from roof edge.

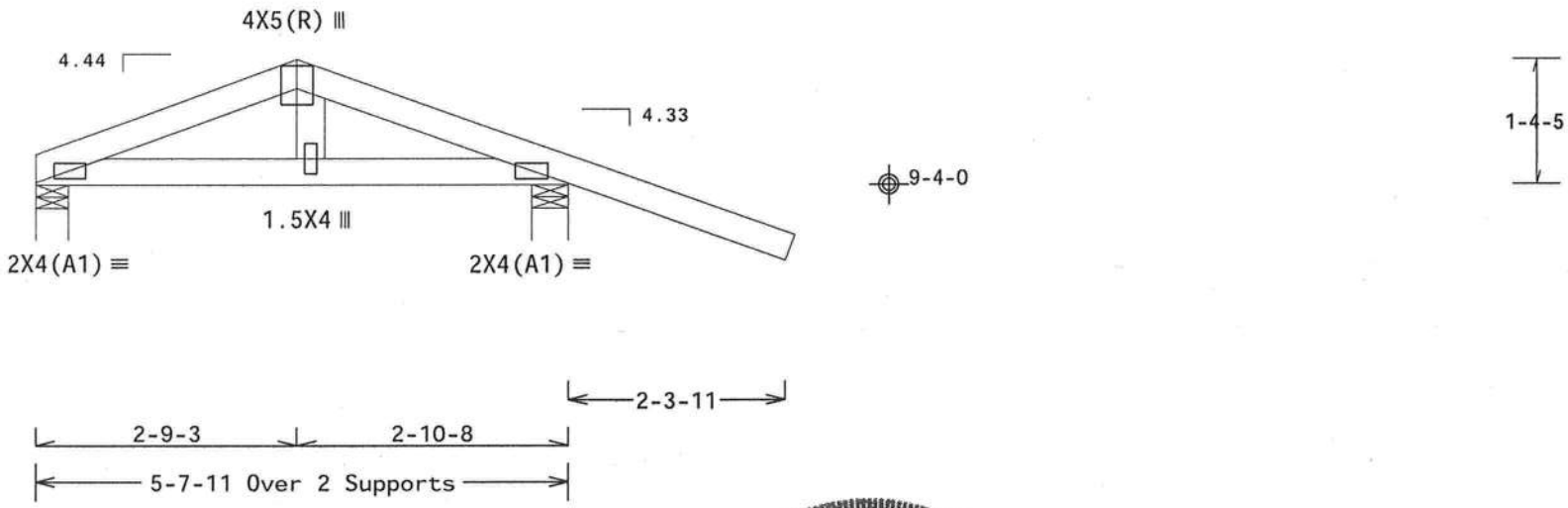

R=177 U=28 W=4.186"
RL=50/-35

R=385 U=99 W=4.619"

Design Crit: FBC2007Res/TPI-2002(STD)
FT/RT=20%(0%)/10(0)

PLT TYP. Wave

09.01.02.0210.16

QTY: 1

FL/-/2/-/-/R/-

Scale =.5"/Ft.

DOUGLAS FLEMING LICENSE No. 66648 STATE OF FLORIDA PROFESSIONAL ENGINEER

11/03/2010

ALPINE
ITW Building Components Group Inc.
Haines City, FL 33844
FL COA #0 278

WARNING TRUSSES REQUIRE EXTREME CARE IN FABRICATION, HANDLING, SHIPPING, INSTALLING AND BRACING. REFER TO BCSI (BUILDING COMPONENT SAFETY INFORMATION), PUBLISHED BY TPI (TRUSS PLATE INSTITUTE, 218 NORTH LEE STREET, SUITE 312, ALEXANDRIA, VA, 22314) AND WTCA (WOOD TRUSS COUNCIL OF AMERICA, 6300 ENTERPRISE LANE, MADISON, WI 53719) FOR SAFETY PRACTICES PRIOR TO PERFORMING THESE FUNCTIONS. UNLESS OTHERWISE INDICATED TOP CHORD SHALL HAVE PROPERLY ATTACHED STRUCTURAL PANELS AND BOTTOM CHORD SHALL HAVE A PROPERLY ATTACHED RIGID CEILING.

IMPORTANT FURNISH A COPY OF THIS DESIGN TO THE INSTALLATION CONTRACTOR. ITW BCG, INC. SHALL NOT BE RESPONSIBLE FOR ANY DEVIATION FROM THIS DESIGN; ANY FAILURE TO BUILD THE TRUSS IN CONFORMANCE WITH TPI; OR FABRICATING, HANDLING, SHIPPING, INSTALLING & BRACING OF TRUSSES.
DESIGN CONFORMS WITH APPLICABLE PROVISIONS OF NDS (NATIONAL DESIGN SPEC. BY AF&PA) AND TPI. ITW BCG CONNECTOR PLATES ARE MADE OF 20/18/16GA (W,H/SS/K) ASTM A653 GRADE 40/60 (W, K/H,SS) GALV. STEEL. APPLY PLATES TO EACH FACE OF TRUSS AND, UNLESS OTHERWISE LOCATED ON THIS DESIGN, POSITION PER DRAWINGS 160A-Z. ANY INSPECTION OF PLATES FOLLOWED BY (i) SHALL BE PER ANNEX A3 OF TPI1-2002 SEC.3. A SEAL ON THIS DRAWING INDICATES ACCEPTANCE OF PROFESSIONAL ENGINEERING RESPONSIBILITY SOLELY FOR THE TRUSS COMPONENT DESIGN SHOWN. THE SUITABILITY AND USE OF THIS COMPONENT FOR ANY BUILDING IS THE RESPONSIBILITY OF THE BUILDING DESIGNER PER ANSI/TPI 1 SEC. 2.

TC LL	20.0 PSF	REF	R2327- 61389
TC DL	7.0 PSF	DATE	11/03/10
BC DL	10.0 PSF	DRW	HCUSR2327 10307103
BC LL	0.0 PSF	HC-ENG	SSB/DF
TOT.LD.	37.0 PSF	SEQN-	337935
DUR.FAC.	1.25	FROM	JRG
SPACING	24.0"	JREF-	1U6L2327Z10

(10700-HOUSE ACCT. BAGGETT RES - T15)

Top chord 2x4 SP #2 Dense
Bot chord 2x4 SP #2 Dense
Webs 2x4 SP #3

Roof overhang supports 2.00 psf soffit load.

In lieu of rigid ceiling use purlins to brace BC @ 24" OC.

Bottom chord checked for 10.00 psf non-concurrent live load.

MWFRS loads based on trusses located at least 15.00 ft. from roof edge.

120 mph wind, 15.00 ft mean hgt, ASCE 7-05, CLOSED bldg, not located within 4.50 ft from roof edge, CAT II, EXP B, wind TC DL=4.2 psf, wind BC DL=5.0 psf. Iw=1.00 GCpi(+/-)=0.18

Wind reactions based on MWFRS pressures.

Truss passed check for 20 psf additional bottom chord live load in areas with 42"-high x 24"-wide clearance.

Deflection meets L/360 live and L/240 total load.

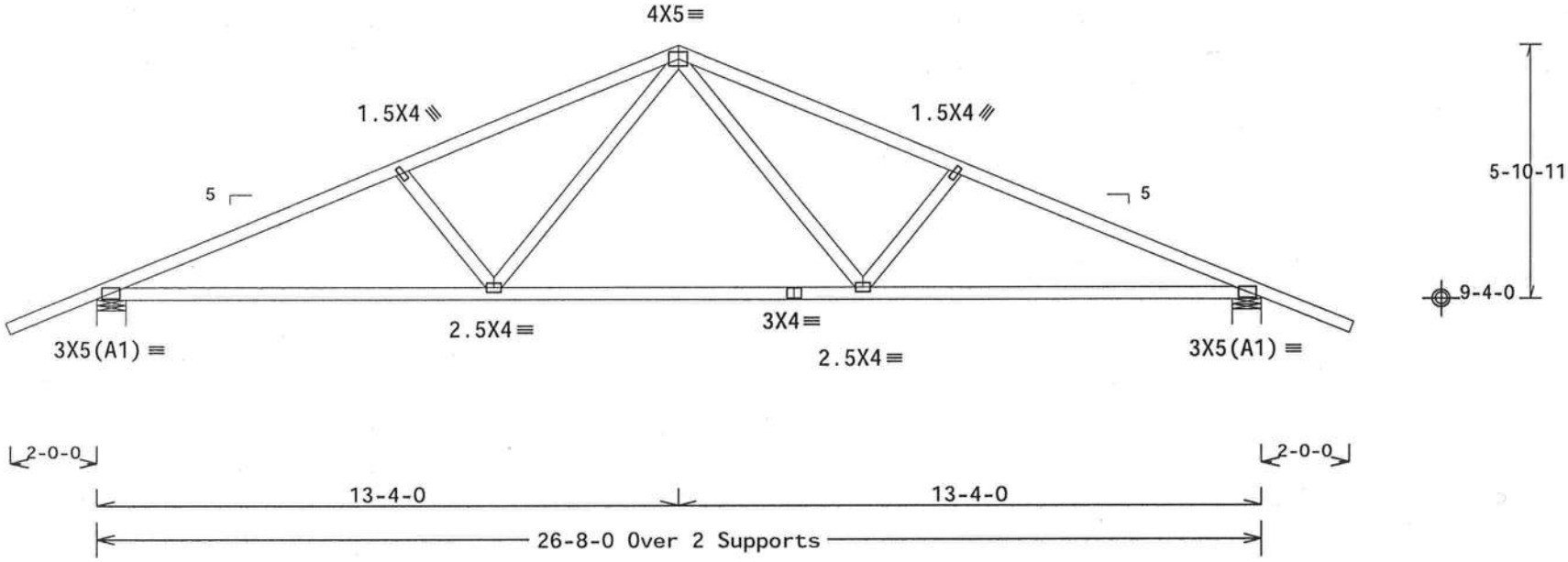

Design Crit: FBC2007Res/TPI-2002(STD)
FT/RT=20%(0%)/10(0)

PLT TYP. Wave

9.02.02.0210.16 QTY 4 FL/-/2/-/-/R/- Scale =.25"/Ft.

ALPINE
ITW Building Components Group Inc.
Haines City, FL 33844
FL COA #0 278

WARNING TRUSSES REQUIRE EXTREME CARE IN FABRICATION, HANDLING, SHIPPING, INSTALLING AND BRACING. REFER TO BCSI (BUILDING COMPONENT SAFETY INFORMATION), PUBLISHED BY TPI (TRUSS PLATE INSTITUTE, 218 NORTH LEE STREET, SUITE 312, ALEXANDRIA, VA, 22314) AND WTCA (WOOD TRUSS COUNCIL OF AMERICA, 6300 ENTERPRISE LANE, MADISON, WI 53719) FOR SAFETY PRACTICES PRIOR TO PERFORMING THESE FUNCTIONS. UNLESS OTHERWISE INDICATED TOP CHORD SHALL HAVE PROPERLY ATTACHED STRUCTURAL PANELS AND BOTTOM CHORD SHALL HAVE A PROPERLY ATTACHED RIGID CEILING.

IMPORTANT FURNISH A COPY OF THIS DESIGN TO THE INSTALLATION CONTRACTOR. ITW BCG, INC. SHALL NOT BE RESPONSIBLE FOR ANY DEVIATION FROM THIS DESIGN; ANY FAILURE TO BUILD THE TRUSS IN CONFORMANCE WITH TPI; OR FABRICATING, HANDLING, SHIPPING, INSTALLING & BRACING OF TRUSSES. DESIGN CONFORMS WITH APPLICABLE PROVISIONS OF NDS (NATIONAL DESIGN SPEC. BY AF&PA) AND TPI. CONNECTOR PLATES ARE MADE OF 20/18/16GA (W,H/SS/K) ASTM A653 GRADE 40/60 (W, K/H,SS) GALV. STEEL. APPLY PLATES TO EACH FACE OF TRUSS AND, UNLESS OTHERWISE LOCATED ON THIS DESIGN, POSITION PER DRAWINGS 1603.2. ANY INSPECTION OF PLATES FOLLOWED BY (i) SHALL BE PER ANNEX A3 OF TPI1-2002 SEC.3. A SEAL ON THIS DRAWING INDICATES ACCEPTANCE OF PROFESSIONAL ENGINEERING RESPONSIBILITY SOLELY FOR THE TRUSS COMPONENT DESIGN SHOWN. THE SUITABILITY AND USE OF THIS COMPONENT FOR ANY BUILDING IS THE RESPONSIBILITY OF THE BUILDING DESIGNER PER ANSI/TPI 1 SEC. 2.

DOUGLAS FLEMING LICENSE No.66648 STATE OF FLORIDA PROFESSIONAL ENGINEER

11/03/2010

TC LL	20.0 PSF	REF	R2327- 61390
TC DL	7.0 PSF	DATE	11/03/10
BC DL	10.0 PSF	DRW	HCUSR2327 10307120
BC LL	0.0 PSF	HC-ENG	SSB/DF
TOT.LD.	37.0 PSF	SEQN-	337877
DUR.FAC.	1.25	FROM	JRG
SPACING	24.0"	JREF-	1U6L2327Z10

(10700-HOUSE ACCT. BAGGETT RES - T16)

Top chord 2x4 SP #2 Dense
Bot chord 2x4 SP #2 Dense
Webs 2x4 SP #3

Roof overhang supports 2.00 psf soffit load.

In lieu of rigid ceiling use purlins to brace BC @ 24" OC.

Bottom chord checked for 10.00 psf non-concurrent live load.

MWFRS loads based on trusses located at least 15.00 ft. from roof edge.

120 mph wind, 15.00 ft mean hgt, ASCE 7-05, CLOSED bldg, not located within 4.50 ft from roof edge, CAT II, EXP B, wind TC DL=4.2 psf, wind BC DL=5.0 psf, Iw=1.00 GCpi(+/-)=0.18

Wind reactions based on MWFRS pressures.

Truss passed check for 20 psf additional bottom chord live load in areas with 42"-high x 24"-wide clearance.

Deflection meets L/360 live and L/240 total load.

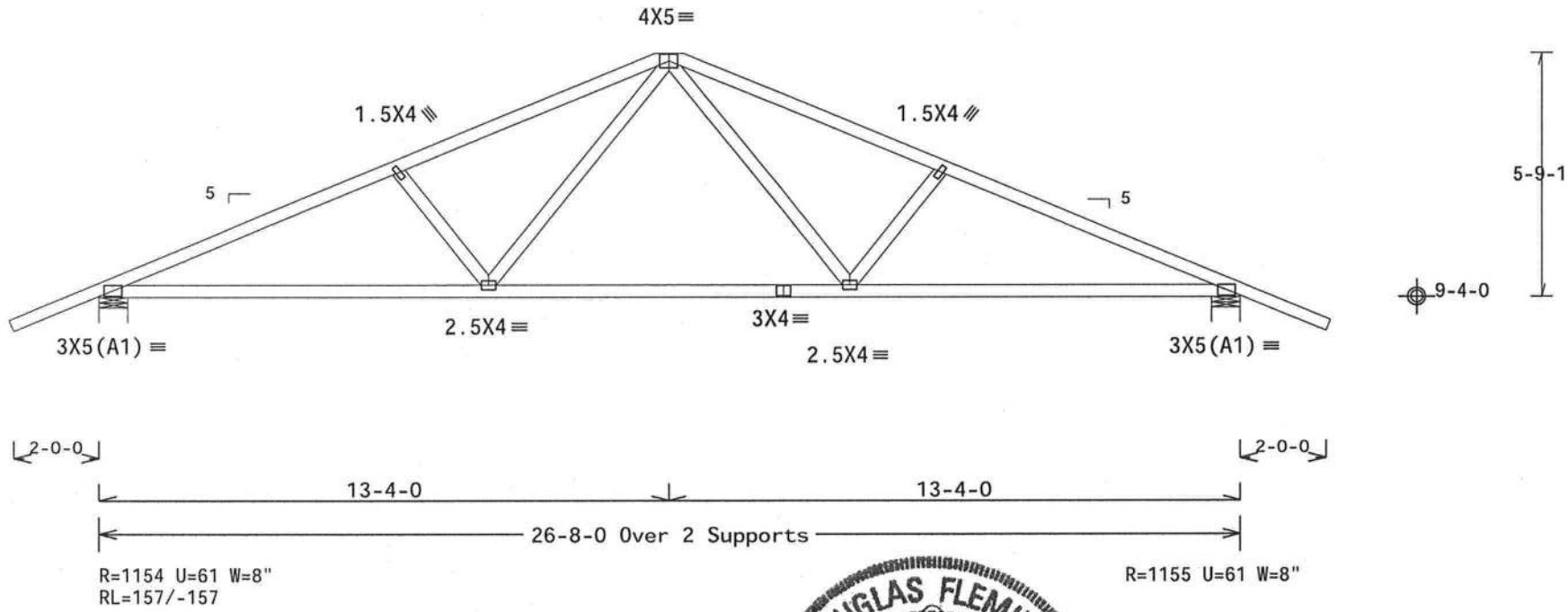

Design Crit: FBC2007Res/TPI-2002(STD)
FT/RT=20%(0%)/10(0)

PLT TYP. Wave

9.01.02.0210.16 QTY: 2

FL/-/2/-/-/R/-

Scale =.25"/Ft.

ALPINE
ITW Building Components Group Inc.
Haines City, FL 33844
FL COA #0 278

WARNING TRUSSES REQUIRE EXTREME CARE IN FABRICATION, HANDLING, SHIPPING, INSTALLING AND BRACING. REFER TO BCSI (BUILDING COMPONENT SAFETY INFORMATION), PUBLISHED BY TPI (TRUSS PLATE INSTITUTE, 218 NORTH LEE STREET, SUITE 312, ALEXANDRIA, VA, 22314) AND WTCA (WOOD TRUSS COUNCIL OF AMERICA, 6300 ENTERPRISE LANE, MADISON, WI 53719) FOR SAFETY PRACTICES PRIOR TO PERFORMING THESE FUNCTIONS. UNLESS OTHERWISE INDICATED TOP CHORD SHALL HAVE PROPERLY ATTACHED STRUCTURAL PANELS AND BOTTOM CHORD SHALL HAVE A PROPERLY ATTACHED RIGID CEILING.

IMPORTANT FURNISH A COPY OF THIS DESIGN TO THE INSTALLATION CONTRACTOR. ITW BCG, INC. SHALL NOT BE RESPONSIBLE FOR ANY DEVIATION FROM THIS DESIGN; ANY FAILURE TO BUILD THE TRUSS IN CONFORMANCE WITH TPI; OR FABRICATING, HANDLING, SHIPPING, INSTALLING & BRACING OF TRUSSES. DESIGN CONFORMS WITH APPLICABLE PROVISIONS OF NDS (NATIONAL DESIGN SPEC. BY AF&PA) AND TPI. ITW BCG CONNECTOR PLATES ARE MADE OF 20/18/16GA (W,H/SS/K) ASTM A653 GRADE 40/60 (W, K/H,SS) GALV. STEEL. APPLY PLATES TO EACH FACE OF TRUSS AND, UNLESS OTHERWISE LOCATED ON THIS DESIGN, POSITION PER DRAWINGS 160A-2. ANY INSPECTION OF PLATES FOLLOWED BY (i) SHALL BE PER ANNEX A3 OF TPI1-2002 SEC.3. A SEAL ON THIS DRAWING INDICATES ACCEPTANCE OF PROFESSIONAL ENGINEERING RESPONSIBILITY SOLELY FOR THE TRUSS COMPONENT DESIGN SHOWN. THE SUITABILITY AND USE OF THIS COMPONENT FOR ANY BUILDING IS THE RESPONSIBILITY OF THE BUILDING DESIGNER PER ANSI/TPI 1 SEC. 2.

DOUGLAS FLEMING LICENSE No. 66648 STATE OF FLORIDA PROFESSIONAL ENGINEER

11/03/2010

TC LL	20.0 PSF	REF	R2327- 61391
TC DL	7.0 PSF	DATE	11/03/10
BC DL	10.0 PSF	DRW	HCUSR2327 10307119
BC LL	0.0 PSF	HC-ENG	SSB/DF
TOT.LD.	37.0 PSF	SEQN-	337883
DUR.FAC.	1.25	FROM	JRG
SPACING	24.0"	JREF-	1U6L2327Z10

(10700-HOUSE ACCT. BAGGETT RES - T17)

Top chord 2x4 SP #2 Dense
Bot chord 2x4 SP #2 Dense
Webs 2x4 SP #3

Roof overhang supports 2.00 psf soffit load.

In lieu of structural panels or rigid ceiling use purlins to brace all flat TC @ 24" OC, all BC @ 24" OC.

MWFRS loads based on trusses located at least 7.50 ft. from roof edge.

120 mph wind, 15.00 ft mean hgt, ASCE 7-05, CLOSED bldg, not located within 4.50 ft from roof edge, CAT II, EXP B, wind TC DL=4.2 psf, wind BC DL=5.0 psf. Iw=1.00 GCpi(+/-)=0.18

Wind reactions based on MWFRS pressures.

Bottom chord checked for 10.00 psf non-concurrent live load.

Deflection meets L/360 live and L/240 total load.

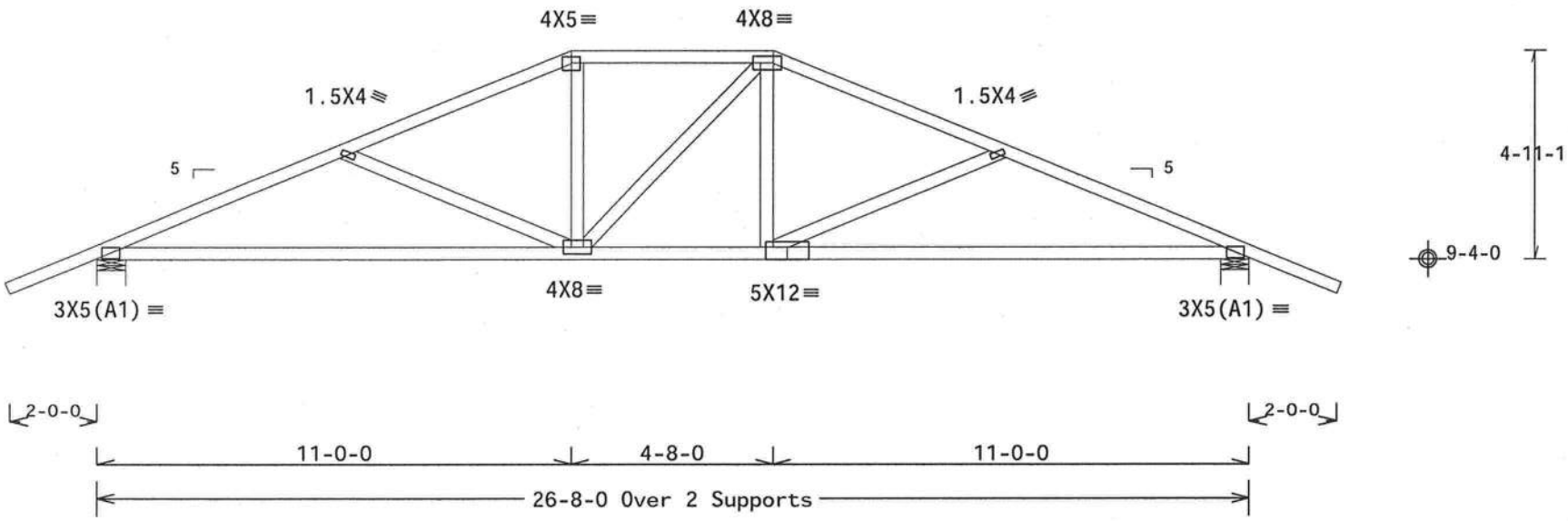

R=1125 U=238 W=8"
RL=139/-139

R=1125 U=238 W=8"

Design Crit: FBC2007Res/TPI-2002(STD)
FT/RT=20%(0%)/10(0)

PLT TYP. Wave

9.02.02.0210.16 QTY 2 FL/-/2/-/-/R/- Scale =.25"/Ft.

ALPINE
ITW Building Components Group Inc.
Haines City, FL 33844
FL COA #0 278

WARNING TRUSSES REQUIRE EXTREME CARE IN FABRICATION, HANDLING, SHIPPING, INSTALLING AND BRACING. REFER TO BCSI (BUILDING COMPONENT SAFETY INFORMATION), PUBLISHED BY TPI (TRUSS PLATE INSTITUTE, 218 NORTH LEE STREET, SUITE 312, ALEXANDRIA, VA. 22314) AND WTCA (WOOD TRUSS COUNCIL OF AMERICA, 6300 ENTERPRISE LANE, MADISON, WI 53719) FOR SAFETY PRACTICES PRIOR TO PERFORMING THESE FUNCTIONS. UNLESS OTHERWISE INDICATED TOP CHORD SHALL HAVE PROPERLY ATTACHED STRUCTURAL PANELS AND BOTTOM CHORD SHALL HAVE A PROPERLY ATTACHED RIGID CEILING.

IMPORTANTFURNISH A COPY OF THIS DESIGN TO THE INSTALLATION CONTRACTOR. ITW BCG, INC. SHALL NOT BE RESPONSIBLE FOR ANY DEVIATION FROM THIS DESIGN; ANY FAILURE TO BUILD THE TRUSS IN CONFORMANCE WITH TPI; OR FABRICATING, HANDLING, SHIPPING, INSTALLING & BRACING OF TRUSSES. DESIGN CONFORMS WITH APPLICABLE PROVISIONS OF NDS (NATIONAL DESIGN SPEC. BY AF&PA) AND TPI. CONNECTOR PLATES ARE MADE OF 20/18/16GA (W,H/SS/K) ASTM A653 GRADE 40/60 (W, K/H,SS) GALV. STEEL. APPLY PLATES TO EACH FACE OF TRUSS AND, UNLESS OTHERWISE LOCATED ON THIS DESIGN, POSITION PER DRAWINGS 160-2. ANY INSPECTION OF PLATES FOLLOWED BY (;) SHALL BE PER ANNEX A3 OF TPI1-2002 SEC.3. A SEAL ON THIS DRAWING INDICATES ACCEPTANCE OF PROFESSIONAL ENGINEERING RESPONSIBILITY SOLELY FOR THE TRUSS COMPONENT DESIGN SHOWN. THE SUITABILITY AND USE OF THIS COMPONENT FOR ANY BUILDING IS THE RESPONSIBILITY OF THE BUILDING DESIGNER PER ANSI/TPI 1 SEC. 2.

DOUGLAS FLEMING LICENSE No.66648 STATE OF FLORIDA PROFESSIONAL ENGINEER

11/03/2010

TC LL	20.0 PSF	REF	R2327- 61392
TC DL	7.0 PSF	DATE	11/03/10
BC DL	10.0 PSF	DRW	HCUSR2327 10307118
BC LL	0.0 PSF	HC-ENG	SSB/DF
TOT.LD.	37.0 PSF	SEQN-	337892
DUR.FAC.	1.25	FROM	JRG
SPACING	24.0"	JREF-	1U6L2327Z10

(10700-HOUSE ACCT. BAGGETT RES - T18)

Top chord 2x4 SP #2 Dense
Bot chord 2x4 SP #2 Dense
Webs 2x4 SP #3

Roof overhang supports 2.00 psf soffit load.

In lieu of structural panels or rigid ceiling use purlins to brace all flat TC @ 24" OC, all BC @ 24" OC.

MWFRS loads based on trusses located at least 7.50 ft. from roof edge.

120 mph wind, 15.00 ft mean hgt, ASCE 7-05, CLOSED bldg, not located within 4.50 ft from roof edge, CAT II, EXP B, wind TC DL=4.2 psf, wind BC DL=5.0 psf. Iw=1.00 GCpi(+/-)=0.18

Wind reactions based on MWFRS pressures.

Bottom chord checked for 10.00 psf non-concurrent live load.

Deflection meets L/360 live and L/240 total load.

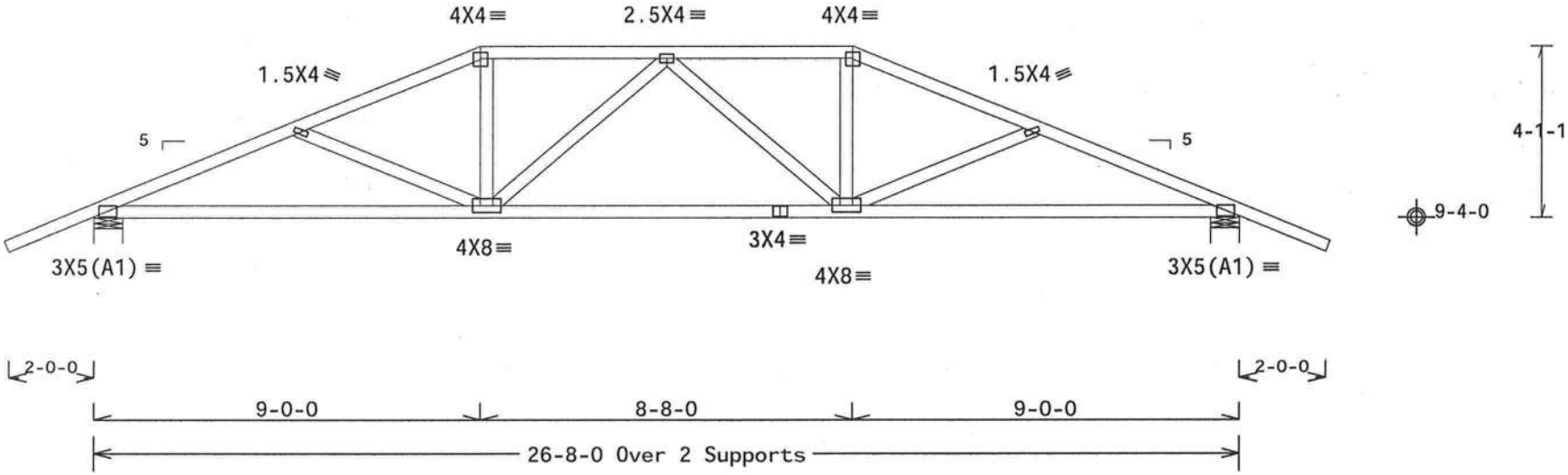

R=1125 U=240 W=8"
RL=121/-121

R=1125 U=240 W=8"

Design Crit: FBC2007Res/TPI-2002(STD)
FT/RT=20%(0%)/10(0)

PLT TYP. Wave | 9.02.02.0210.16 | QTY 2 | FL/-/2/-/-/R/- | Scale =.25"/Ft.

ALPINE
ITW Building Components Group Inc.
Haines City, FL 33844
FL COA #0 278

WARNING TRUSSES REQUIRE EXTREME CARE IN FABRICATION, HANDLING, SHIPPING, INSTALLING AND BRACING. REFER TO BCSI (BUILDING COMPONENT SAFETY INFORMATION), PUBLISHED BY TPI (TRUSS PLATE INSTITUTE, 218 NORTH LEE STREET, SUITE 312, ALEXANDRIA, VA, 22314) AND WTCA (WOOD TRUSS COUNCIL OF AMERICA, 6300 ENTERPRISE LANE, MADISON, WI 53719) FOR SAFETY PRACTICES PRIOR TO PERFORMING THESE FUNCTIONS. UNLESS OTHERWISE INDICATED TOP CHORD SHALL HAVE PROPERLY ATTACHED STRUCTURAL PANELS AND BOTTOM CHORD SHALL HAVE A PROPERLY ATTACHED RIGID CEILING.

IMPORTANT FURNISH A COPY OF THIS DESIGN TO THE INSTALLATION CONTRACTOR. ITW BCG, INC. SHALL NOT BE RESPONSIBLE FOR ANY DEVIATION FROM THIS DESIGN; ANY FAILURE TO BUILD THE TRUSS IN COMFORMANCE WITH TPI; OR FABRICATING, HANDLING, SHIPPING, INSTALLING & BRACING OF TRUSSES. DESIGN CONFORMS WITH APPLICABLE PROVISIONS OF NDS (NATIONAL DESIGN SPEC. BY AF&PA) AND TPI. ITW BCG CONNECTOR PLATES ARE MADE OF 20/18/16GA (W,H/SS/K) ASTM A653 GRADE 40/60 (W, K/H,SS) GALV. STEEL. APPLY PLATES TO EACH FACE OF TRUSS AND, UNLESS OTHERWISE LOCATED ON THIS DESIGN, POSITION PER DRAWINGS 160[illegible]. ANY INSPECTION OF PLATES FOLLOWED BY (1) SHALL BE PER ANNEX A3 OF TPI1-2002 SEC.3. A SEAL ON THIS DRAWING INDICATES ACCEPTANCE OF PROFESSIONAL ENGINEERING RESPONSIBILITY SOLELY FOR THE TRUSS COMPONENT DESIGN SHOWN. THE SUITABILITY AND USE OF THIS COMPONENT FOR ANY BUILDING IS THE RESPONSIBILITY OF THE BUILDING DESIGNER PER ANSI/TPI 1 SEC. 2.

DOUGLAS FLEMING LICENSE No.66648 STATE OF FLORIDA PROFESSIONAL ENGINEER

11/03/2010

TC LL	20.0 PSF	REF	R2327- 61393
TC DL	7.0 PSF	DATE	11/03/10
BC DL	10.0 PSF	DRW	HCUSR2327 10307117
BC LL	0.0 PSF	HC-ENG	SSB/DF
TOT.LD.	37.0 PSF	SEQN-	337899
DUR.FAC.	1.25	FROM	JRG
SPACING	24.0"	JREF-	1U6L2327Z10

(10700-HOUSE ACCT. BAGGETT RES - T19)

Top chord 2x4 SP #2 Dense :T2 2x6 SP #2 Dense:
Bot chord 2x4 SP #1
Webs 2x4 SP #3

Roof overhang supports 2.00 psf soffit load.

In lieu of structural panels or rigid ceiling use purlins to brace all flat TC @ 24" OC, all BC @ 24" OC.

Deflection meets L/360 live and L/240 total load.

120 mph wind, 15.00 ft mean hgt, ASCE 7-05, CLOSED bldg, Located anywhere in roof, CAT II, EXP B, wind TC DL=4.2 psf, wind BC DL=5.0 psf. Iw=1.00 GCpi(+/-)=0.18

Wind reactions based on MWFRS pressures.

#1 hip supports 7-0-0 jacks with no webs.

Left side jacks have 7-0-0 setback with 0-0-0 cant and 2-1-6 overhang. End jacks have 7-0-0 setback with 0-0-0 cant and 2-1-6 overhang. Right side jacks have 7-0-0 setback with 0-0-0 cant and 2-1-6 overhang.

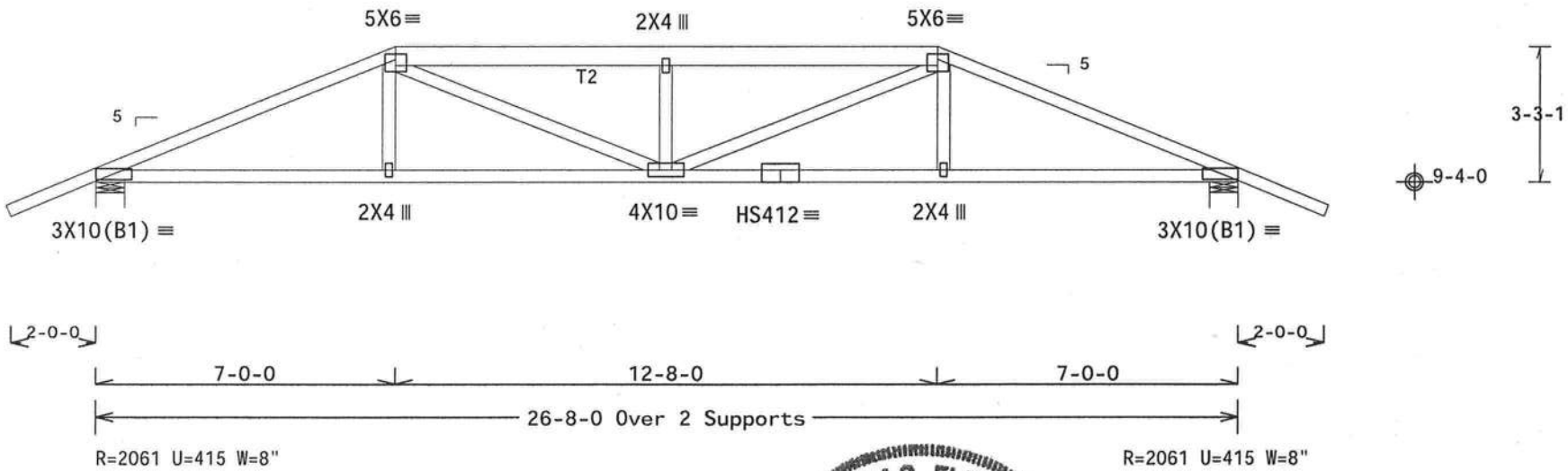

Design Crit: FBC2007Res/TPI-2002(STD)

PLT TYP. 20 Gauge HS,Wave FT/RT=20%(0%)/10(0) 9.01.02.0210.16 QTY 2 FL/-/2/-/-/R/- Scale =.25"/Ft.

ALPINE
ITW Building Components Group Inc.
Haines City, FL 33844
FL COA #0 278

WARNING TRUSSES REQUIRE EXTREME CARE IN FABRICATION, HANDLING, SHIPPING, INSTALLING AND BRACING. REFER TO BCSI (BUILDING COMPONENT SAFETY INFORMATION), PUBLISHED BY TPI (TRUSS PLATE INSTITUTE, 218 NORTH LEE STREET, SUITE 312, ALEXANDRIA, VA, 22314) AND WTCA (WOOD TRUSS COUNCIL OF AMERICA, 6300 ENTERPRISE LANE, MADISON, WI 53719) FOR SAFETY PRACTICES PRIOR TO PERFORMING THESE FUNCTIONS. UNLESS OTHERWISE INDICATED TOP CHORD SHALL HAVE PROPERLY ATTACHED STRUCTURAL PANELS AND BOTTOM CHORD SHALL HAVE A PROPERLY ATTACHED RIGID CEILING.

IMPORTANT FURNISH A COPY OF THIS DESIGN TO THE INSTALLATION CONTRACTOR. ITW BCG, INC. SHALL NOT BE RESPONSIBLE FOR ANY DEVIATION FROM THIS DESIGN; ANY FAILURE TO BUILD THE TRUSS IN CONFORMANCE WITH TPI; OR FABRICATING, HANDLING, SHIPPING, INSTALLING & BRACING OF TRUSSES. DESIGN CONFORMS WITH APPLICABLE PROVISIONS OF NDS (NATIONAL DESIGN SPEC. BY AF&PA) AND TPI. ITW BCG CONNECTOR PLATES ARE MADE OF 20/18/16GA (W,H/SS/K) ASTM A653 GRADE 40/60 (W, K/H,SS) GALV. STEEL. APPLY PLATES TO EACH FACE OF TRUSS AND, UNLESS OTHERWISE LOCATED ON THIS DESIGN, POSITION PER DRAWINGS 160A. ANY INSPECTION OF PLATES FOLLOWED BY (i) SHALL BE PER ANNEX A3 OF TPI1-2002 SEC.3. A SEAL ON THIS DRAWING INDICATES ACCEPTANCE OF PROFESSIONAL ENGINEERING RESPONSIBILITY SOLELY FOR THE TRUSS COMPONENT DESIGN SHOWN. THE SUITABILITY AND USE OF THIS COMPONENT FOR ANY BUILDING IS THE RESPONSIBILITY OF THE BUILDING DESIGNER PER ANSI/TPI 1 SEC. 2.

DOUGLAS FLEMING LICENSE No. 66648 STATE OF FLORIDA PROFESSIONAL ENGINEER

11/03/2010

TC LL	20.0 PSF	REF	R2327- 61394
TC DL	7.0 PSF	DATE	11/03/10
BC DL	10.0 PSF	DRW	HCUSR2327 10307116
BC LL	0.0 PSF	HC-ENG	SSB/DF
TOT.LD.	37.0 PSF	SEQN-	337929
DUR.FAC.	1.25	FROM	JRG
SPACING	24.0"	JREF-	1U6L2327Z10

(10700-HOUSE ACCT. BAGGETT RES - SJ5)

Top chord 2x4 SP #2 Dense
Bot chord 2x4 SP #2 Dense

Roof overhang supports 2.00 psf soffit load.

In lieu of rigid ceiling use purlins to brace BC @ 24" OC.

Deflection meets L/360 live and L/240 total load.

120 mph wind, 15.00 ft mean hgt, ASCE 7-05, CLOSED bldg, not located within 4.50 ft from roof edge, CAT II, EXP B, wind TC DL=4.2 psf, wind BC DL=5.0 psf. Iw=1.00 GCpi(+/-)=0.18

Wind reactions based on MWFRS pressures.

Bottom chord checked for 10.00 psf non-concurrent live load.

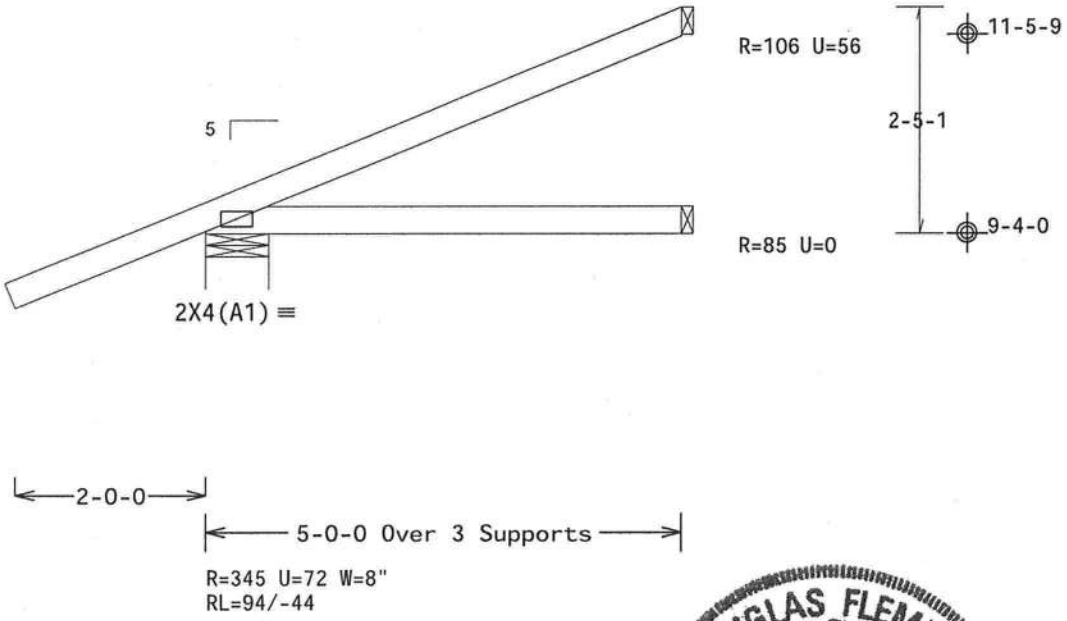

Design Crit: FBC2007Res/TPI-2002(STD)

PLT TYP. Wave FT/RT=20%(0%)/10(0) 9.02.02.0210.16 QTY 8 FL/-/2/-/-/R/- Scale =.5"/Ft.

ALPINE
ITW Building Components Group Inc.
Haines City, FL 33844
FL COA #0 278

WARNING TRUSSES REQUIRE EXTREME CARE IN FABRICATION, HANDLING, SHIPPING, INSTALLING AND BRACING. REFER TO BCSI (BUILDING COMPONENT SAFETY INFORMATION), PUBLISHED BY TPI (TRUSS PLATE INSTITUTE, 218 NORTH LEE STREET, SUITE 312, ALEXANDRIA, VA. 22314) AND WTCA (WOOD TRUSS COUNCIL OF AMERICA, 6300 ENTERPRISE LANE, MADISON, WI 53719) FOR SAFETY PRACTICES PRIOR TO PERFORMING THESE FUNCTIONS. UNLESS OTHERWISE INDICATED TOP CHORD SHALL HAVE PROPERLY ATTACHED STRUCTURAL PANELS AND BOTTOM CHORD SHALL HAVE A PROPERLY ATTACHED RIGID CEILING.

IMPORTANT FURNISH A COPY OF THIS DESIGN TO THE INSTALLATION CONTRACTOR. ITW BCG, INC. SHALL NOT BE RESPONSIBLE FOR ANY DEVIATION FROM THIS DESIGN; ANY FAILURE TO BUILD THE TRUSS IN CONFORMANCE WITH TPI; OR FABRICATING, HANDLING, SHIPPING, INSTALLING & BRACING OF TRUSSES.
DESIGN CONFORMS WITH APPLICABLE PROVISIONS OF NDS (NATIONAL DESIGN SPEC, BY AF&PA) AND TPI. ITW BCG CONNECTOR PLATES ARE MADE OF 20/18/16GA (W,H/SS/K) ASTM A653 GRADE 40/60 (W, K/H,SS) GALV. STEEL. APPLY PLATES TO EACH FACE OF TRUSS AND, UNLESS OTHERWISE LOCATED ON THIS DESIGN, POSITION PER DRAWINGS 160A. ANY INSPECTION OF PLATES FOLLOWED BY (i) SHALL BE PER ANNEX A3 OF TPI1-2002 SEC.3. A SEAL ON THIS DRAWING INDICATES ACCEPTANCE OF PROFESSIONAL ENGINEERING RESPONSIBILITY SOLELY FOR THE TRUSS COMPONENT DESIGN SHOWN. THE SUITABILITY AND USE OF THIS COMPONENT FOR ANY BUILDING IS THE RESPONSIBILITY OF THE BUILDING DESIGNER PER ANSI/TPI 1 SEC. 2.

DOUGLAS FLEMING LICENSE No. 66648 STATE OF FLORIDA PROFESSIONAL ENGINEER

11/03/2010

TC LL	20.0 PSF	REF	R2327- 61395
TC DL	7.0 PSF	DATE	11/03/10
BC DL	10.0 PSF	DRW	HCUSR2327 10307122
BC LL	0.0 PSF	HC-ENG	SSB/DF
TOT.LD.	37.0 PSF	SEQN-	338040
DUR.FAC.	1.25	FROM	JRG
SPACING	24.0"	JREF-	1U6L2327Z10

Top chord 2x4 SP #2 Dense
Bot chord 2x4 SP #2 Dense

Roof overhang supports 2.00 psf soffit load.

In lieu of rigid ceiling use purlins to brace BC @ 24" OC.

Deflection meets L/360 live and L/240 total load.

120 mph wind, 15.00 ft mean hgt, ASCE 7-05, CLOSED bldg, not located within 4.50 ft from roof edge, CAT II, EXP B, wind TC DL=4.2 psf, wind BC DL=5.0 psf. Iw=1.00 GCpi(+/-)=0.18

Wind reactions based on MWFRS pressures.

Bottom chord checked for 10.00 psf non-concurrent live load.

MWFRS loads based on trusses located at least 7.50 ft. from roof edge.

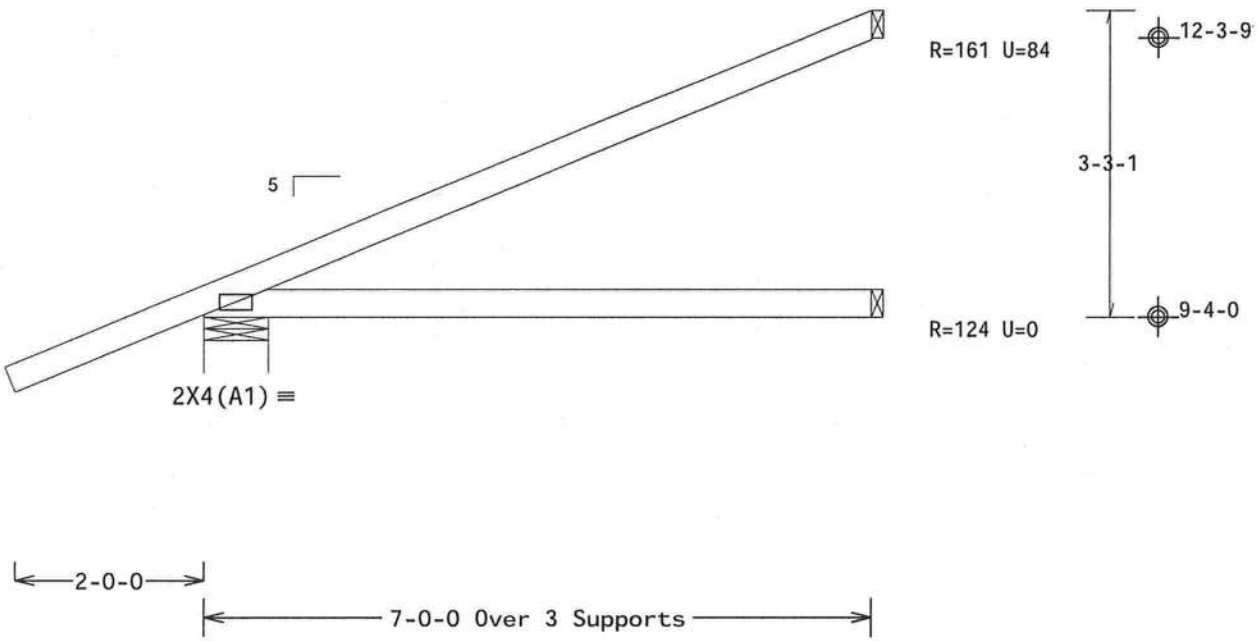

Design Crit: FBC2007Res/TPI-2002(STD)
FT/RT=20%(0%)/10(0)

PLT TYP. Wave

9.01.02.0210.16 QTY 16 FL/-/2/-/-/R/-

Scale =.5"/Ft.

ALPINE
ITW Building Components Group Inc.
Haines City, FL 33844
FL COA #0 278

WARNING TRUSSES REQUIRE EXTREME CARE IN FABRICATION, HANDLING, SHIPPING, INSTALLING AND BRACING. REFER TO BCSI (BUILDING COMPONENT SAFETY INFORMATION), PUBLISHED BY TPI (TRUSS PLATE INSTITUTE, 218 NORTH LEE STREET, SUITE 312, ALEXANDRIA, VA, 22314) AND WTCA (WOOD TRUSS COUNCIL OF AMERICA, 6300 ENTERPRISE LANE, MADISON, WI 53719) FOR SAFETY PRACTICES PRIOR TO PERFORMING THESE FUNCTIONS. UNLESS OTHERWISE INDICATED TOP CHORD SHALL HAVE PROPERLY ATTACHED STRUCTURAL PANELS AND BOTTOM CHORD SHALL HAVE A PROPERLY ATTACHED RIGID CEILING.

IMPORTANT FURNISH A COPY OF THIS DESIGN TO THE INSTALLATION CONTRACTOR. ITW BCG, INC. SHALL NOT BE RESPONSIBLE FOR ANY DEVIATION FROM THIS DESIGN; ANY FAILURE TO BUILD THE TRUSS IN CONFORMANCE WITH TPI; OR FABRICATING, HANDLING, SHIPPING, INSTALLING & BRACING OF TRUSSES.
DESIGN CONFORMS WITH APPLICABLE PROVISIONS OF NDS (NATIONAL DESIGN SPEC. BY AF&PA) AND TPI. ITW BCG CONNECTOR PLATES ARE MADE OF 20/18/16GA (W,H/SS/K) ASTM A653 GRADE 40/60 (W, K/H,SS) GALV. STEEL. APPLY PLATES TO EACH FACE OF TRUSS AND, UNLESS OTHERWISE LOCATED ON THIS DESIGN, POSITION PER DRAWINGS 160/ ANY INSPECTION OF PLATES FOLLOWED BY (1) SHALL BE PER ANNEX A3 OF TPI1-2002 SEC.3. A SEAL ON THIS DRAWING INDICATES ACCEPTANCE OF PROFESSIONAL ENGINEERING RESPONSIBILITY SOLELY FOR THE TRUSS COMPONENT DESIGN SHOWN. THE SUITABILITY AND USE OF THIS COMPONENT FOR ANY BUILDING IS THE RESPONSIBILITY OF THE BUILDING DESIGNER PER ANSI/TPI 1 SEC. 2.

DOUGLAS FLEMING LICENSE No. 66648 STATE OF FLORIDA PROFESSIONAL ENGINEER

11/03/2010

TC LL	20.0 PSF	REF	R2327- 61396
TC DL	7.0 PSF	DATE	11/03/10
BC DL	10.0 PSF	DRW	HCUSR2327 10307125
BC LL	0.0 PSF	HC-ENG	SSB/DF
TOT.LD.	37.0 PSF	SEQN-	338037
DUR.FAC.	1.25	FROM	JRG
SPACING	24.0"	JREF-	1U6L2327Z10

(10700-HOUSE ACCT. BAGGETT RES - SJ3)

Top chord 2x4 SP #2 Dense
Bot chord 2x4 SP #2 Dense

Roof overhang supports 2.00 psf soffit load.

In lieu of rigid ceiling use purlins to brace BC @ 24" OC.

Deflection meets L/360 live and L/240 total load.

120 mph wind, 15.00 ft mean hgt, ASCE 7-05, CLOSED bldg, Located anywhere in roof, CAT II, EXP B, wind TC DL=4.2 psf, wind BC DL=5.0 psf. Iw=1.00 GCpi(+/-)=0.18

Wind reactions based on MWFRS pressures.

Bottom chord checked for 10.00 psf non-concurrent live load.

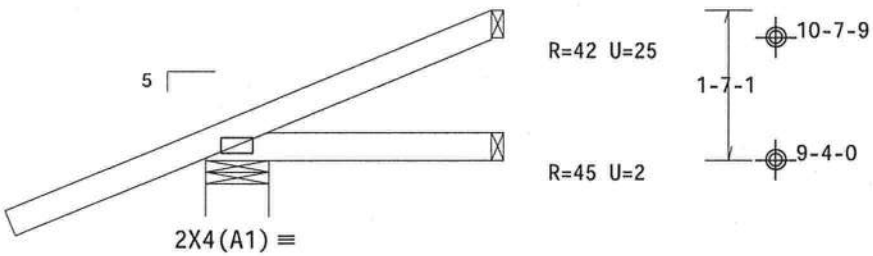

2-0-0

3-0-0 Over 3 Supports

R=291 U=73 W=8"
RL=66/-36

Design Crit: FBC2007Res/TPI-2002(STD)
FT/RT=20%(0%)/10(0)

PLT TYP. Wave

09.01.02.0210.16 QTY:8

FL/-/2/-/-/R/- Scale =.5"/Ft.

DOUGLAS FLEMING LICENSE No. 66648 STATE OF FLORIDA PROFESSIONAL ENGINEER

11/03/2010

ALPINE
ITW Building Components Group Inc.
Haines City, FL 33844
FL COA #0 278

WARNING TRUSSES REQUIRE EXTREME CARE IN FABRICATION, HANDLING, SHIPPING, INSTALLING AND BRACING. REFER TO BCSI (BUILDING COMPONENT SAFETY INFORMATION), PUBLISHED BY TPI (TRUSS PLATE INSTITUTE, 218 NORTH LEE STREET, SUITE 312, ALEXANDRIA, VA. 22314) AND WTCA (WOOD TRUSS COUNCIL OF AMERICA, 6300 ENTERPRISE LANE, MADISON, WI 53719) FOR SAFETY PRACTICES PRIOR TO PERFORMING THESE FUNCTIONS. UNLESS OTHERWISE INDICATED TOP CHORD SHALL HAVE PROPERLY ATTACHED STRUCTURAL PANELS AND BOTTOM CHORD SHALL HAVE A PROPERLY ATTACHED RIGID CEILING.

IMPORTANTFURNISH A COPY OF THIS DESIGN TO THE INSTALLATION CONTRACTOR. ITW BCG, INC. SHALL NOT BE RESPONSIBLE FOR ANY DEVIATION FROM THIS DESIGN; ANY FAILURE TO BUILD THE TRUSS IN CONFORMANCE WITH TPI; OR FABRICATING, HANDLING, SHIPPING, INSTALLING & BRACING OF TRUSSES.
DESIGN CONFORMS WITH APPLICABLE PROVISIONS OF NDS (NATIONAL DESIGN SPEC. BY AF&PA) AND TPI. ITW BCG CONNECTOR PLATES ARE MADE OF 20/18/16GA (W,H/SS/K) ASTM A653 GRADE 40/60 (W, K/H,SS) GALV. STEEL. APPLY PLATES TO EACH FACE OF TRUSS AND, UNLESS OTHERWISE LOCATED ON THIS DESIGN, POSITION PER DRAWINGS 160A-Z. ANY INSPECTION OF PLATES FOLLOWED BY (i) SHALL BE PER ANNEX A3 OF TPI1-2002 SEC.3. A SEAL ON THIS DRAWING INDICATES ACCEPTANCE OF PROFESSIONAL ENGINEERING RESPONSIBILITY SOLELY FOR THE TRUSS COMPONENT DESIGN SHOWN. THE SUITABILITY AND USE OF THIS COMPONENT FOR ANY BUILDING IS THE RESPONSIBILITY OF THE BUILDING DESIGNER PER ANSI/TPI 1 SEC. 2.

TC LL	20.0 PSF	REF	R2327- 61397
TC DL	7.0 PSF	DATE	11/03/10
BC DL	10.0 PSF	DRW	HCUSR2327 10307123
BC LL	0.0 PSF	HC-ENG	SSB/DF
TOT.LD.	37.0 PSF	SEQN-	338043
DUR.FAC.	1.25	FROM	JRG
SPACING	24.0"	JREF-	1U6L2327Z10

Top chord 2x4 SP #2 Dense
Bot chord 2x4 SP #2 Dense

Roof overhang supports 2.00 psf soffit load.

In lieu of rigid ceiling use purlins to brace BC @ 24" OC.

Deflection meets L/360 live and L/240 total load.

120 mph wind, 15.00 ft mean hgt, ASCE 7-05, CLOSED bldg, Located anywhere in roof, CAT II, EXP B, wind TC DL=4.2 psf, wind BC DL=5.0 psf. Iw=1.00 GCpi(+/-)=0.18

Wind reactions based on MWFRS pressures.

Bottom chord checked for 10.00 psf non-concurrent live load.

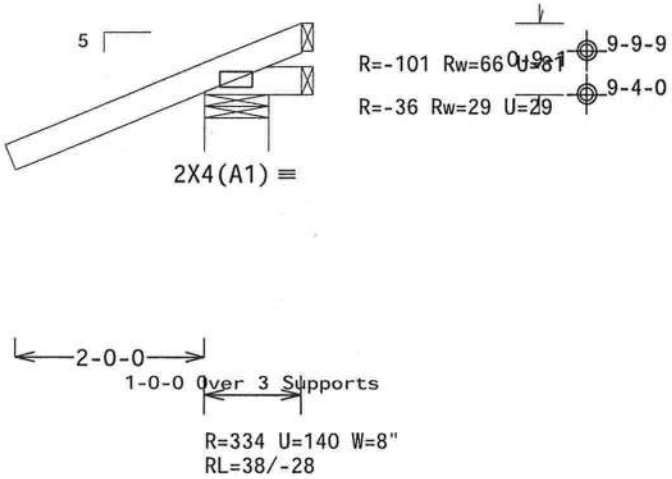

Design Crit: FBC2007Res/TPI-2002(STD)
FT/RT=20%(0%)/10(0)

PLT TYP. Wave

9.01.02.0210.16 QTY 3

FL/-/2/-/-/R/-

Scale =.5"/Ft.

ALPINE
ITW Building Components Group Inc.
Haines City, FL 33844
FL COA #0 278

WARNING TRUSSES REQUIRE EXTREME CARE IN FABRICATION, HANDLING, SHIPPING, INSTALLING AND BRACING. REFER TO BCSI (BUILDING COMPONENT SAFETY INFORMATION), PUBLISHED BY TPI (TRUSS PLATE INSTITUTE, 218 NORTH LEE STREET, SUITE 312, ALEXANDRIA, VA, 22314) AND WTCA (WOOD TRUSS COUNCIL OF AMERICA, 6300 ENTERPRISE LANE, MADISON, WI 53719) FOR SAFETY PRACTICES PRIOR TO PERFORMING THESE FUNCTIONS. UNLESS OTHERWISE INDICATED TOP CHORD SHALL HAVE PROPERLY ATTACHED STRUCTURAL PANELS AND BOTTOM CHORD SHALL HAVE A PROPERLY ATTACHED RIGID CEILING.

IMPORTANT FURNISH A COPY OF THIS DESIGN TO THE INSTALLATION CONTRACTOR. ITW BCG, INC. SHALL NOT BE RESPONSIBLE FOR ANY DEVIATION FROM THIS DESIGN; ANY FAILURE TO BUILD THE TRUSS IN CONFORMANCE WITH TPI; OR FABRICATING, HANDLING, SHIPPING, INSTALLING & BRACING OF TRUSSES.
DESIGN CONFORMS WITH APPLICABLE PROVISIONS OF NDS (NATIONAL DESIGN SPEC. BY AF&PA) AND TPI. ITW BCG CONNECTOR PLATES ARE MADE OF 20/18/16GA (W,H/SS/K) ASTM A653 GRADE 40/60 (W, K/H,SS) GALV. STEEL. APPLY PLATES TO EACH FACE OF TRUSS AND, UNLESS OTHERWISE LOCATED ON THIS DESIGN, POSITION PER DRAWINGS 160A. ANY INSPECTION OF PLATES FOLLOWED BY (I) SHALL BE PER ANNEX A3 OF TPI1-2002 SEC.3. A SEAL ON THIS DRAWING INDICATES ACCEPTANCE OF PROFESSIONAL ENGINEERING RESPONSIBILITY SOLELY FOR THE TRUSS COMPONENT DESIGN SHOWN. THE SUITABILITY AND USE OF THIS COMPONENT FOR ANY BUILDING IS THE RESPONSIBILITY OF THE BUILDING DESIGNER PER ANSI/TPI 1 SEC. 2.

DOUGLAS FLEMING LICENSE No. 66648 STATE OF FLORIDA PROFESSIONAL ENGINEER

11/03/2010

TC LL	20.0 PSF	REF	R2327- 61398
TC DL	7.0 PSF	DATE	11/03/10
BC DL	10.0 PSF	DRW	HCUSR2327 10307124
BC LL	0.0 PSF	HC-ENG	SSB/DF
TOT.LD.	37.0 PSF	SEQN-	338046
DUR.FAC.	1.25	FROM	JRG
SPACING	24.0"	JREF-	1U6L2327Z10

(10700-HOUSE ACCT. BAGGETT RES - EJ7A)

Top chord 2x4 SP #2 Dense
Bot chord 2x4 SP #2 Dense
Webs 2x4 SP #3

Left end vertical not exposed to wind pressure.

Roof overhang supports 2.00 psf soffit load.

Truss passed check for 20 psf additional bottom chord live load in areas with 42"-high x 24"-wide clearance.

MWFRS loads based on trusses located at least 7.50 ft. from roof edge.

120 mph wind, 15.00 ft mean hgt, ASCE 7-05, CLOSED bldg, not located within 4.50 ft from roof edge, CAT II, EXP B, wind TC DL=4.2 psf, wind BC DL=5.0 psf. Iw=1.00 GCpi(+/-)=0.18

Wind reactions based on MWFRS pressures.

In lieu of rigid ceiling use purlins to brace BC @ 24" OC.

Bottom chord checked for 10.00 psf non-concurrent live load.

Deflection meets L/360 live and L/240 total load.

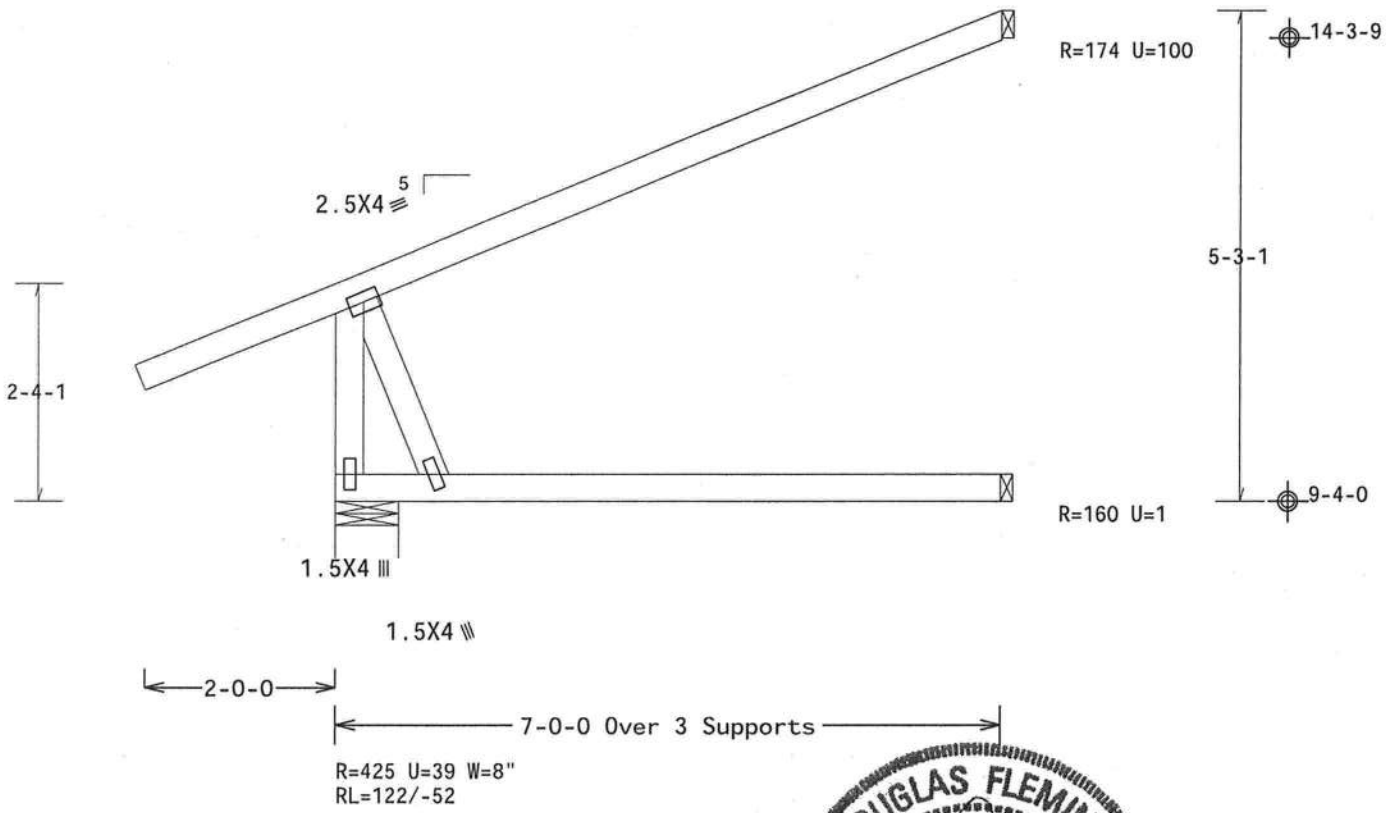

Design Crit: FBC2007Res/TPI-2002(STD)
FT/RT=20%(0%)/10(0)

PLT TYP. Wave

9.01.02.0210.16 QTY:5

FL/-/2/-/-/R/-

Scale =.5"/Ft.

ALPINE
ITW Building Components Group Inc.
Haines City, FL 33844
FL COA #0 278

WARNING TRUSSES REQUIRE EXTREME CARE IN FABRICATION, HANDLING, SHIPPING, INSTALLING AND BRACING. REFER TO BCSI (BUILDING COMPONENT SAFETY INFORMATION), PUBLISHED BY TPI (TRUSS PLATE INSTITUTE, 218 NORTH LEE STREET, SUITE 312, ALEXANDRIA, VA, 22314) AND WTCA (WOOD TRUSS COUNCIL OF AMERICA, 6300 ENTERPRISE LANE, MADISON, WI 53719) FOR SAFETY PRACTICES PRIOR TO PERFORMING THESE FUNCTIONS. UNLESS OTHERWISE INDICATED TOP CHORD SHALL HAVE PROPERLY ATTACHED STRUCTURAL PANELS AND BOTTOM CHORD SHALL HAVE A PROPERLY ATTACHED RIGID CEILING.

IMPORTANT FURNISH A COPY OF THIS DESIGN TO THE INSTALLATION CONTRACTOR. ITW BCG, INC. SHALL NOT BE RESPONSIBLE FOR ANY DEVIATION FROM THIS DESIGN; ANY FAILURE TO BUILD THE TRUSS IN CONFORMANCE WITH TPI; OR FABRICATING, HANDLING, SHIPPING, INSTALLING & BRACING OF TRUSSES.
DESIGN CONFORMS WITH APPLICABLE PROVISIONS OF NDS (NATIONAL DESIGN SPEC. BY AF&PA) AND TPI. ITW BCG CONNECTOR PLATES ARE MADE OF 20/18/16GA (W,H/SS/K) ASTM A653 GRADE 40/60 (W, K/H,SS) GALV. STEEL. APPLY PLATES TO EACH FACE OF TRUSS AND, UNLESS OTHERWISE LOCATED ON THIS DESIGN, POSITION PER DRAWINGS 160A-Z. ANY INSPECTION OF PLATES FOLLOWED BY (:) SHALL BE PER ANNEX A3 OF TPI1-2002 SEC.3. A SEAL ON THIS DRAWING INDICATES ACCEPTANCE OF PROFESSIONAL ENGINEERING RESPONSIBILITY SOLELY FOR THE TRUSS COMPONENT DESIGN SHOWN. THE SUITABILITY AND USE OF THIS COMPONENT FOR ANY BUILDING IS THE RESPONSIBILITY OF THE BUILDING DESIGNER PER ANSI/TPI 1 SEC. 2.

DOUGLAS FLEMING LICENSE No. 66648 STATE OF FLORIDA PROFESSIONAL ENGINEER
11/03/2010

TC LL	20.0 PSF	REF R2327- 61399
TC DL	7.0 PSF	DATE 11/03/10
BC DL	10.0 PSF	DRW HCUSR2327 10307149
BC LL	0.0 PSF	HC-ENG SSB/DF
TOT.LD.	37.0 PSF	SEQN- 338282
DUR.FAC.	1.25	FROM JRG
SPACING	24.0"	JREF- 1U6L2327Z10

(10700-HOUSE ACCT. BAGGETT RES - EJ7B)

THIS DWG PREPARED FROM COMPUTER INPUT (LOADS & DIMENSIONS) SUBMITTED BY TRUSS MFR.

Top chord 2x4 SP #2 Dense
Bot chord 2x4 SP #2 Dense

Roof overhang supports 2.00 psf soffit load.

In lieu of rigid ceiling use purlins to brace BC @ 24" OC.

Deflection meets L/360 live and L/240 total load.

120 mph wind, 15.00 ft mean hgt, ASCE 7-05, CLOSED bldg, not located within 4.50 ft from roof edge, CAT II, EXP B, wind TC DL=4.2 psf, wind BC DL=5.0 psf. Iw=1.00 GCpi(+/-)=0.18

Wind reactions based on MWFRS pressures.

Bottom chord checked for 10.00 psf non-concurrent live load.

MWFRS loads based on trusses located at least 7.50 ft. from roof edge.

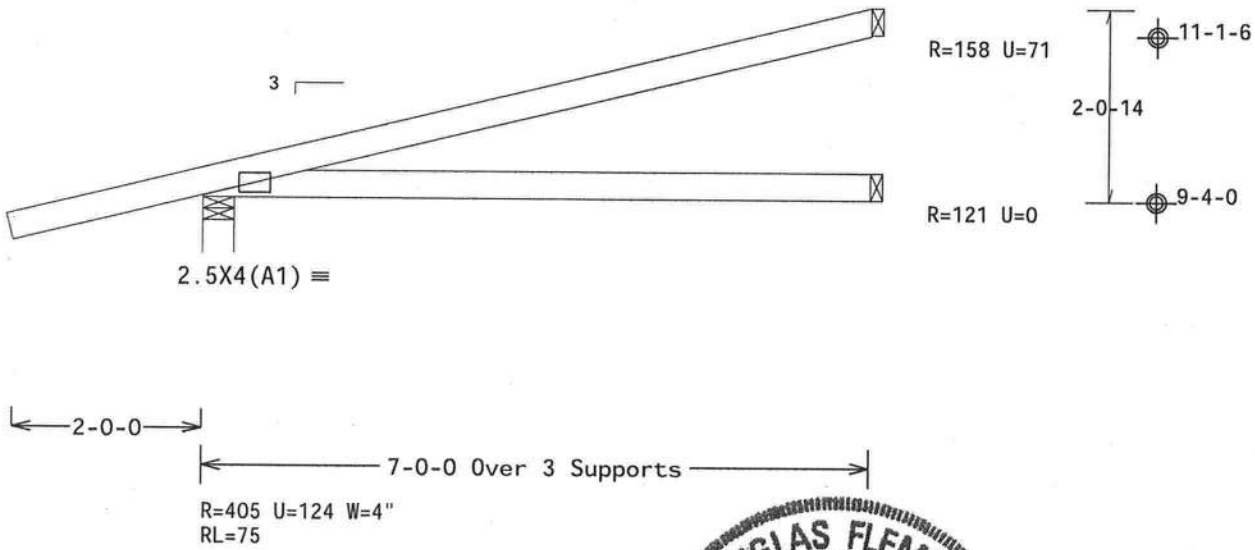

Design Crit: FBC2007Res/TPI-2002(STD)
FT/RT=20%(0%)/10(0)

PLT TYP. Wave

9.01.02.0210.16 QTY 2

FL/-/2/-/-/R/-

Scale =.5"/Ft.

ALPINE
ITW Building Components Group Inc.
Haines City, FL 33844
FL COA #0 278

WARNING TRUSSES REQUIRE EXTREME CARE IN FABRICATION, HANDLING, SHIPPING, INSTALLING AND BRACING. REFER TO BCSI (BUILDING COMPONENT SAFETY INFORMATION), PUBLISHED BY TPI (TRUSS PLATE INSTITUTE, 218 NORTH LEE STREET, SUITE 312, ALEXANDRIA, VA. 22314) AND WTCA (WOOD TRUSS COUNCIL OF AMERICA, 6300 ENTERPRISE LANE, MADISON, WI 53719) FOR SAFETY PRACTICES PRIOR TO PERFORMING THESE FUNCTIONS. UNLESS OTHERWISE INDICATED TOP CHORD SHALL HAVE PROPERLY ATTACHED STRUCTURAL PANELS AND BOTTOM CHORD SHALL HAVE A PROPERLY ATTACHED RIGID CEILING.

IMPORTANT FURNISH A COPY OF THIS DESIGN TO THE INSTALLATION CONTRACTOR. ITW BCG, INC. SHALL NOT BE RESPONSIBLE FOR ANY DEVIATION FROM THIS DESIGN; ANY FAILURE TO BUILD THE TRUSS IN COMFORMANCE WITH TPI; OR FABRICATING, HANDLING, SHIPPING, INSTALLING & BRACING OF TRUSSES.
DESIGN CONFORMS WITH APPLICABLE PROVISIONS OF NDS (NATIONAL DESIGN SPEC. BY AF&PA) AND TPI. ITW BCG CONNECTOR PLATES ARE MADE OF 20/18/16GA (W,H/SS/K) ASTM A653 GRADE 40/60 (W, K/H,SS) GALV. STEEL. APPLY PLATES TO EACH FACE OF TRUSS AND, UNLESS OTHERWISE LOCATED ON THIS DESIGN, POSITION PER DRAWINGS 160A. ANY INSPECTION OF PLATES FOLLOWED BY (i) SHALL BE PER ANNEX A3 OF TPI1-2002 SEC.3. A SEAL ON THIS DRAWING INDICATES ACCEPTANCE OF PROFESSIONAL ENGINEERING RESPONSIBILITY SOLELY FOR THE TRUSS COMPONENT DESIGN SHOWN. THE SUITABILITY AND USE OF THIS COMPONENT FOR ANY BUILDING IS THE RESPONSIBILITY OF THE BUILDING DESIGNER PER ANSI/TPI 1 SEC. 2.

DOUGLAS FLEMING LICENSE No. 66648 STATE OF FLORIDA PROFESSIONAL ENGINEER

11/03/2010

TC LL	20.0 PSF	REF	R2327- 61400
TC DL	7.0 PSF	DATE	11/03/10
BC DL	10.0 PSF	DRW	HCUSR2327 10307115
BC LL	0.0 PSF	HC-ENG	SSB/DF
TOT.LD.	37.0 PSF	SEQN-	337963
DUR.FAC.	1.25	FROM	JRG
SPACING	24.0"	JREF-	1U6L2327Z10

(10700-HOUSE ACCT. BAGGETT RES - EJ7C)

Top chord 2x4 SP #2 Dense
Bot chord 2x4 SP #2 Dense
Webs 2x4 SP #3

Left end vertical not exposed to wind pressure.

Calculated horizontal deflection is 0.18" due to live load and 0.10" due to dead load.

Bottom chord checked for 10.00 psf non-concurrent live load.

Deflection meets L/360 live and L/240 total load.

120 mph wind, 15.00 ft mean hgt, ASCE 7-05, CLOSED bldg, not located within 4.50 ft from roof edge, CAT II, EXP B, wind TC DL=4.2 psf, wind BC DL=5.0 psf. Iw=1.00 GCpi(+/-)=0.18

Wind reactions based on MWFRS pressures.

In lieu of rigid ceiling use purlins to brace BC @ 24" OC.

Truss passed check for 20 psf additional bottom chord live load in areas with 42"-high x 24"-wide clearance.

MWFRS loads based on trusses located at least 15.00 ft. from roof edge.

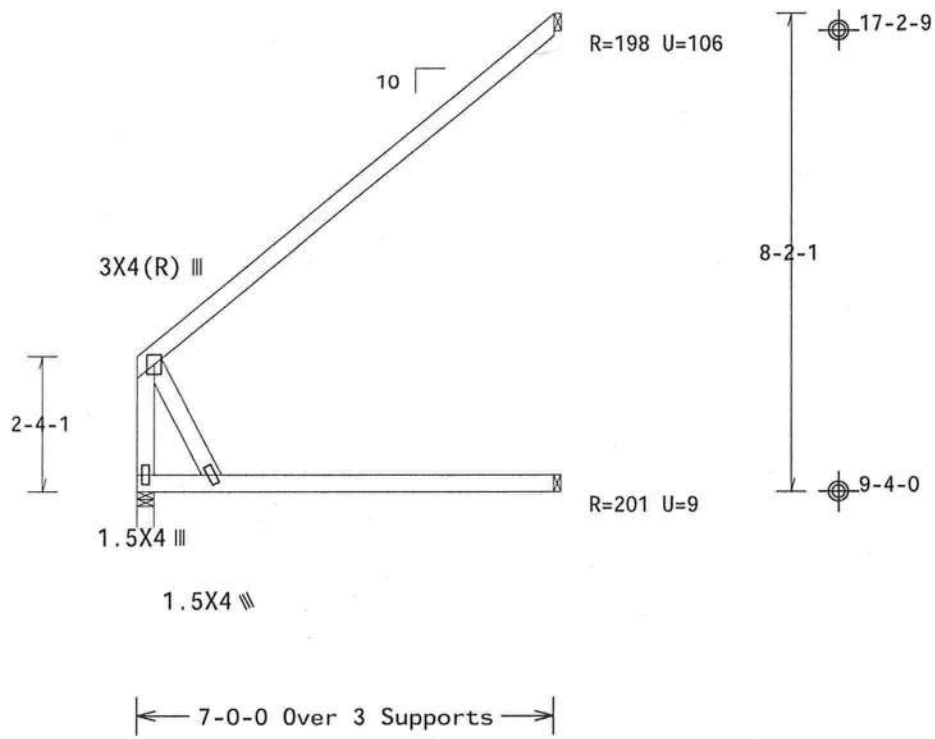

R=338 U=0 W=3.5"
RL=143/-99

Design Crit: FBC2007Res/TPI-2002(STD)
FT/RT=20%(0%)/10(0)

PLT TYP. Wave | 9.07.02.0210.16 | QTY 13 | FL/-/2/-/-/R/- | Scale =.3125"/Ft.

ALPINE
ITW Building Components Group Inc.
Haines City, FL 33844
FL COA #0 278

WARNING TRUSSES REQUIRE EXTREME CARE IN FABRICATION, HANDLING, SHIPPING, INSTALLING AND BRACING. REFER TO BCSI (BUILDING COMPONENT SAFETY INFORMATION), PUBLISHED BY TPI (TRUSS PLATE INSTITUTE, 218 NORTH LEE STREET, SUITE 312, ALEXANDRIA, VA. 22314) AND WTCA (WOOD TRUSS COUNCIL OF AMERICA, 6300 ENTERPRISE LANE, MADISON, WI 53719) FOR SAFETY PRACTICES PRIOR TO PERFORMING THESE FUNCTIONS. UNLESS OTHERWISE INDICATED TOP CHORD SHALL HAVE PROPERLY ATTACHED STRUCTURAL PANELS AND BOTTOM CHORD SHALL HAVE A PROPERLY ATTACHED RIGID CEILING.

IMPORTANT FURNISH A COPY OF THIS DESIGN TO THE INSTALLATION CONTRACTOR. ITW BCG, INC. SHALL NOT BE RESPONSIBLE FOR ANY DEVIATION FROM THIS DESIGN; ANY FAILURE TO BUILD THE TRUSS IN COMFORMANCE WITH TPI; OR FABRICATING, HANDLING, SHIPPING, INSTALLING & BRACING OF TRUSSES.
DESIGN CONFORMS WITH APPLICABLE PROVISIONS OF NDS (NATIONAL DESIGN SPEC. BY AF&PA) AND TPI. ITW BCG CONNECTOR PLATES ARE MADE OF 20/18/16GA (W,H/SS/K) ASTM A653 GRADE 40/60 (W, K/H,SS) GALV. STEEL. APPLY PLATES TO EACH FACE OF TRUSS AND, UNLESS OTHERWISE LOCATED ON THIS DESIGN, POSITION PER DRAWINGS 160-7. ANY INSPECTION OF PLATES FOLLOWED BY (i) SHALL BE PER ANNEX A3 OF TPI1-2002 SEC.3. A SEAL ON THIS DRAWING INDICATES ACCEPTANCE OF PROFESSIONAL ENGINEERING RESPONSIBILITY SOLELY FOR THE TRUSS COMPONENT DESIGN SHOWN. THE SUITABILITY AND USE OF THIS COMPONENT FOR ANY BUILDING IS THE RESPONSIBILITY OF THE BUILDING DESIGNER PER ANSI/TPI 1 SEC. 2.

DOUGLAS FLEMING LICENSE No. 66648 STATE OF FLORIDA PROFESSIONAL ENGINEER
11/03/2010

TC LL	20.0 PSF	REF	R2327- 61401
TC DL	7.0 PSF	DATE	11/03/10
BC DL	10.0 PSF	DRW	HCUSR2327 10307152
BC LL	0.0 PSF	HC-ENG	SSB/DF
TOT.LD.	37.0 PSF	SEQN-	338362
DUR.FAC.	1.25	FROM	JRG
SPACING	24.0"	JREF-	1U6L2327Z10

THIS DWG PREPARED FROM COMPUTER INPUT (LOADS & DIMENSIONS) SUBMITTED BY TRUSS MFR.

(10700-HOUSE ACCT. BAGGETT RES - SJ5A)

Top chord 2x4 SP #2 Dense
Bot chord 2x4 SP #2 Dense
Webs 2x4 SP #3

Left end vertical not exposed to wind pressure.

Roof overhang supports 2.00 psf soffit load.

Bottom chord checked for 10.00 psf non-concurrent live load.

120 mph wind, 15.00 ft mean hgt, ASCE 7-05, CLOSED bldg, not located within 4.50 ft from roof edge, CAT II, EXP B, wind TC DL=4.2 psf, wind BC DL=5.0 psf. Iw=1.00 GCpi(+/-)=0.18

Wind reactions based on MWFRS pressures.

In lieu of rigid ceiling use purlins to brace BC @ 24" OC.

Deflection meets L/360 live and L/240 total load.

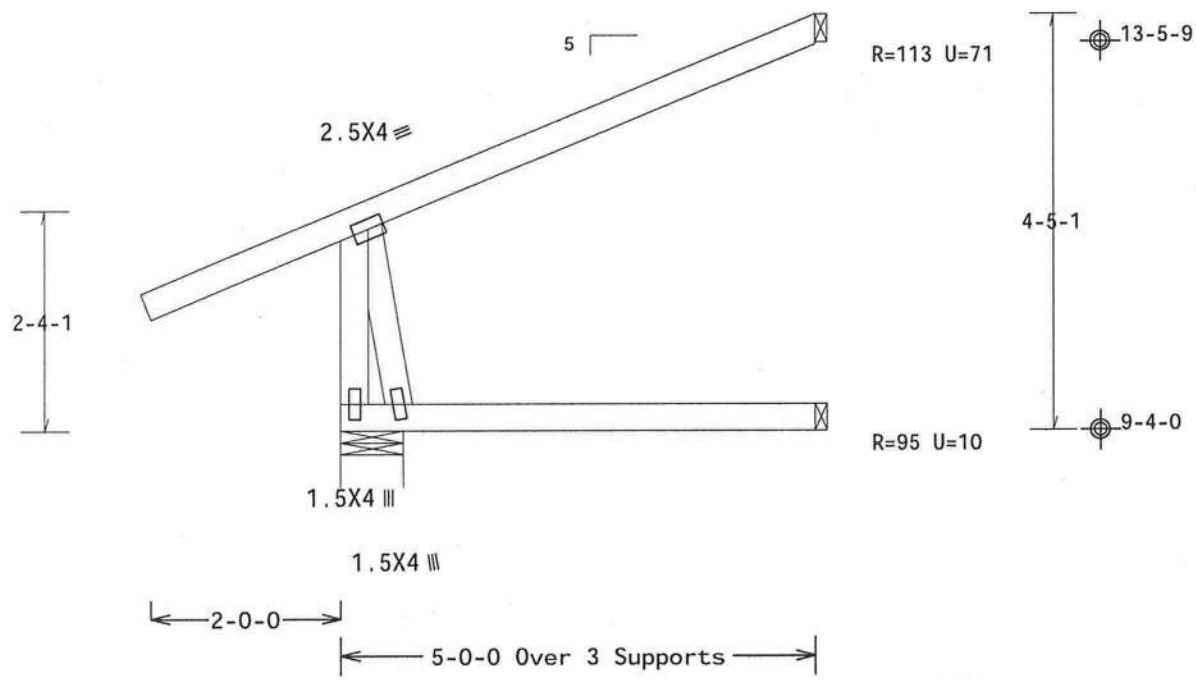

Design Crit: FBC2007Res/TPI-2002(STD)
FT/RT=20%(0%)/10(0)

PLT TYP. Wave

9.0.02.0210.16 QTY 4

FL/-/2/-/-/R/-

Scale =.5"/Ft.

ALPINE
ITW Building Components Group Inc.
Haines City, FL 33844
FL COA #0 278

WARNING TRUSSES REQUIRE EXTREME CARE IN FABRICATION, HANDLING, SHIPPING, INSTALLING AND BRACING. REFER TO BCSI (BUILDING COMPONENT SAFETY INFORMATION), PUBLISHED BY TPI (TRUSS PLATE INSTITUTE, 218 NORTH LEE STREET, SUITE 312, ALEXANDRIA, VA. 22314) AND WTCA (WOOD TRUSS COUNCIL OF AMERICA 6300 ENTERPRISE LANE, MADISON, WI 53719) FOR SAFETY PRACTICES PRIOR TO PERFORMING THESE FUNCTIONS. UNLESS OTHERWISE INDICATED TOP CHORD SHALL HAVE PROPERLY ATTACHED STRUCTURAL PANELS AND BOTTOM CHORD SHALL HAVE A PROPERLY ATTACHED RIGID CEILING.

IMPORTANTFURNISH A COPY OF THIS DESIGN TO THE INSTALLATION CONTRACTOR. ITW BCG, INC. SHALL NOT BE RESPONSIBLE FOR ANY DEVIATION FROM THIS DESIGN; ANY FAILURE TO BUILD THE TRUSS IN COMFORMANCE WITH TPI; OR FABRICATING, HANDLING, SHIPPING, INSTALLING & BRACING OF TRUSSES.
DESIGN CONFORMS WITH APPLICABLE PROVISIONS OF NDS (NATIONAL DESIGN SPEC. BY AF&PA) AND TPI. ITW BCG CONNECTOR PLATES ARE MADE OF 20/18/16GA (W,H/SS/K) ASTM A653 GRADE 40/60 (W, K/H,SS) GALV. STEEL. APPLY PLATES TO EACH FACE OF TRUSS AND. UNLESS OTHERWISE LOCATED ON THIS DESIGN, POSITION PER DRAWINGS 1603/1. ANY INSPECTION OF PLATES FOLLOWED BY (i) SHALL BE PER ANNEX A3 OF TPI1-2002 SEC.3. A SEAL ON THIS DRAWING INDICATES ACCEPTANCE OF PROFESSIONAL ENGINEERING RESPONSIBILITY SOLELY FOR THE TRUSS COMPONENT DESIGN SHOWN. THE SUITABILITY AND USE OF THIS COMPONENT FOR ANY BUILDING IS THE RESPONSIBILITY OF THE BUILDING DESIGNER PER ANSI/TPI 1 SEC. 2.

DOUGLAS FLEMING LICENSE No. 66648 STATE OF FLORIDA PROFESSIONAL ENGINEER

11/03/2010

TC LL	20.0 PSF	REF	R2327- 61402
TC DL	7.0 PSF	DATE	11/03/10
BC DL	10.0 PSF	DRW	HCUSR2327 10307150
BC LL	0.0 PSF	HC-ENG	SSB/DF
TOT.LD.	37.0 PSF	SEQN-	338289
DUR.FAC.	1.25	FROM	JRG
SPACING	24.0"	JREF-	1U6L2327Z10

(10700-HOUSE ACCT. BAGGETT RES - SJ3A)

Top chord 2x4 SP #2 Dense
Bot chord 2x4 SP #2 Dense
Webs 2x4 SP #3

Left end vertical not exposed to wind pressure.

Roof overhang supports 2.00 psf soffit load.

Bottom chord checked for 10.00 psf non-concurrent live load.

120 mph wind, 15.00 ft mean hgt, ASCE 7-05, CLOSED bldg, Located anywhere in roof, CAT II, EXP B, wind TC DL=4.2 psf, wind BC DL=5.0 psf. Iw=1.00 GCpi(+/-)=0.18

Wind reactions based on MWFRS pressures.

In lieu of rigid ceiling use purlins to brace BC @ 24" OC.

Deflection meets L/360 live and L/240 total load.

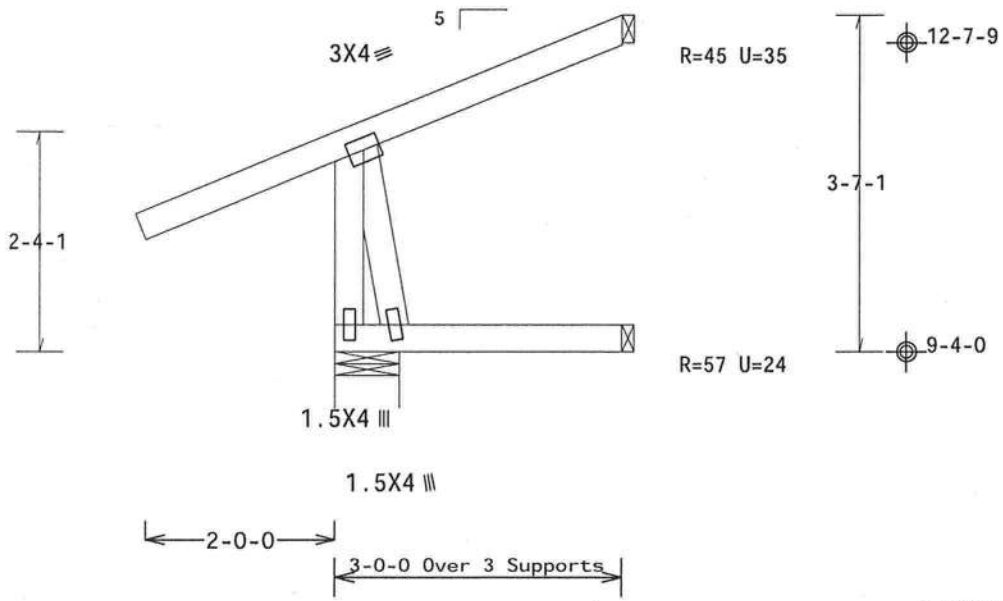

R=277 U=35 W=8"
RL=66/-36

Design Crit: FBC2007Res/TPI-2002(STD)
FT/RT=20%(0%)/10(0)

PLT TYP. Wave | 9.01.02.0210.16 | QTY 4 | FL/-/2/-/-/R/- | Scale =.5"/Ft.

ALPINE
ITW Building Components Group Inc.
Haines City, FL 33844
FL COA #0 278

WARNING TRUSSES REQUIRE EXTREME CARE IN FABRICATION, HANDLING, SHIPPING, INSTALLING AND BRACING. REFER TO BCSI (BUILDING COMPONENT SAFETY INFORMATION), PUBLISHED BY TPI (TRUSS PLATE INSTITUTE, 218 NORTH LEE STREET, SUITE 312, ALEXANDRIA, VA. 22314) AND WTCA (WOOD TRUSS COUNCIL OF AMERICA, 6300 ENTERPRISE LANE, MADISON, WI 53719) FOR SAFETY PRACTICES PRIOR TO PERFORMING THESE FUNCTIONS. UNLESS OTHERWISE INDICATED TOP CHORD SHALL HAVE PROPERLY ATTACHED STRUCTURAL PANELS AND BOTTOM CHORD SHALL HAVE A PROPERLY ATTACHED RIGID CEILING.

IMPORTANTFURNISH A COPY OF THIS DESIGN TO THE INSTALLATION CONTRACTOR. ITW BCG, INC. SHALL NOT BE RESPONSIBLE FOR ANY DEVIATION FROM THIS DESIGN; ANY FAILURE TO BUILD THE TRUSS IN CONFORMANCE WITH TPI; OR FABRICATING, HANDLING, SHIPPING, INSTALLING & BRACING OF TRUSSES. DESIGN CONFORMS WITH APPLICABLE PROVISIONS OF NDS (NATIONAL DESIGN SPEC. BY AF&PA) AND TPI. ITW BCG CONNECTOR PLATES ARE MADE OF 20/18/16GA (W,H/SS/K) ASTM A653 GRADE 40/60 (W, K/H,SS) GALV. STEEL. APPLY PLATES TO EACH FACE OF TRUSS AND, UNLESS OTHERWISE LOCATED ON THIS DESIGN, POSITION PER DRAWINGS 160A. ANY INSPECTION OF PLATES FOLLOWED BY (i) SHALL BE PER ANNEX A3 OF TPI1-2002 SEC.3. A SEAL ON THIS DRAWING INDICATES ACCEPTANCE OF PROFESSIONAL ENGINEERING RESPONSIBILITY SOLELY FOR THE TRUSS COMPONENT DESIGN SHOWN. THE SUITABILITY AND USE OF THIS COMPONENT FOR ANY BUILDING IS THE RESPONSIBILITY OF THE BUILDING DESIGNER PER ANSI/TPI 1 SEC. 2.

DOUGLAS FLEMING LICENSE No. 66648 STATE OF FLORIDA PROFESSIONAL ENGINEER

11/03/2010

TC LL	20.0 PSF	REF	R2327- 61403
TC DL	7.0 PSF	DATE	11/03/10
BC DL	10.0 PSF	DRW	HCUSR2327 10307147
BC LL	0.0 PSF	HC-ENG	SSB/DF
TOT.LD.	37.0 PSF	SEQN-	338296
DUR.FAC.	1.25	FROM	JRG
SPACING	24.0"	JREF-	1U6L2327Z10

(10700-HOUSE ACCT. BAGGETT RES - SJ1A)

Top chord 2x4 SP #2 Dense
Bot chord 2x4 SP #2 Dense
Webs 2x4 SP #3

Left end vertical not exposed to wind pressure.

Roof overhang supports 2.00 psf soffit load.

Bottom chord checked for 10.00 psf non-concurrent live load.

120 mph wind, 15.00 ft mean hgt, ASCE 7-05, CLOSED bldg, Located anywhere in roof, CAT II, EXP B, wind TC DL=4.2 psf, wind BC DL=5.0 psf. Iw=1.00 GCpi(+/-)=0.18

Wind reactions based on MWFRS pressures.

In lieu of rigid ceiling use purlins to brace BC @ 24" OC.

Deflection meets L/360 live and L/240 total load.

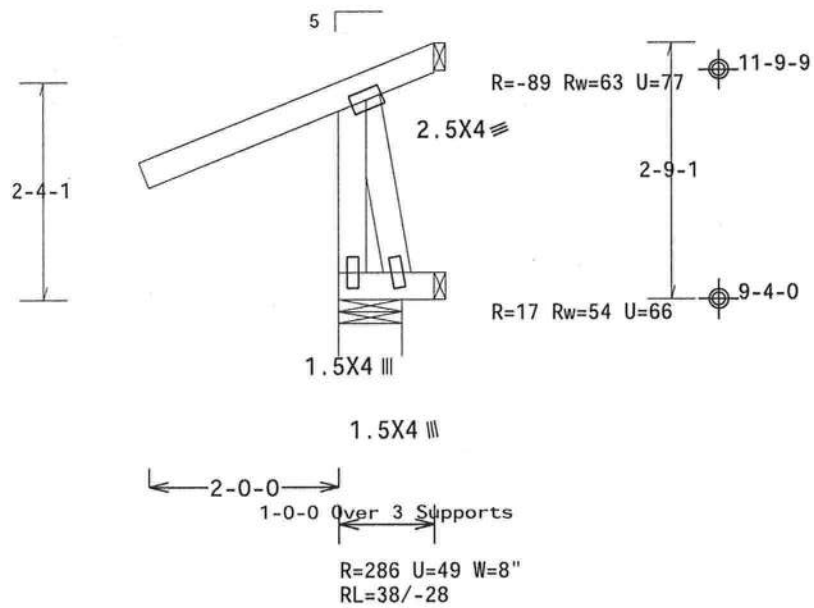

Design Crit: FBC2007Res/TPI-2002(STD)
FT/RT=20%(0%)/10(0)

PLT TYP. Wave

9.01.02.0210.16 QTY: 4

FL/-/2/-/-/R/-

Scale =.5"/Ft.

ALPINE
ITW Building Components Group Inc.
Haines City, FL 33844
FL COA #0 278

WARNING TRUSSES REQUIRE EXTREME CARE IN FABRICATION, HANDLING, SHIPPING, INSTALLING AND BRACING. REFER TO BCSI (BUILDING COMPONENT SAFETY INFORMATION), PUBLISHED BY TPI (TRUSS PLATE INSTITUTE, 218 NORTH LEE STREET, SUITE 312, ALEXANDRIA, VA, 22314) AND WTCA (WOOD TRUSS COUNCIL OF AMERICA, 6300 ENTERPRISE LANE, MADISON, WI 53719) FOR SAFETY PRACTICES PRIOR TO PERFORMING THESE FUNCTIONS. UNLESS OTHERWISE INDICATED TOP CHORD SHALL HAVE PROPERLY ATTACHED STRUCTURAL PANELS AND BOTTOM CHORD SHALL HAVE A PROPERLY ATTACHED RIGID CEILING.

IMPORTANTFURNISH A COPY OF THIS DESIGN TO THE INSTALLATION CONTRACTOR. ITW BCG, INC. SHALL NOT BE RESPONSIBLE FOR ANY DEVIATION FROM THIS DESIGN; ANY FAILURE TO BUILD THE TRUSS IN CONFORMANCE WITH TPI; OR FABRICATING, HANDLING, SHIPPING, INSTALLING & BRACING OF TRUSSES. DESIGN CONFORMS WITH APPLICABLE PROVISIONS OF NDS (NATIONAL DESIGN SPEC, BY AF&PA) AND TPI. ITW BCG CONNECTOR PLATES ARE MADE OF 20/18/16GA (W,H/SS/K) ASTM A653 GRADE 40/60 (W, K/H,SS) GALV. STEEL. APPLY PLATES TO EACH FACE OF TRUSS AND, UNLESS OTHERWISE LOCATED ON THIS DESIGN, POSITION PER DRAWINGS 160A-2. ANY INSPECTION OF PLATES FOLLOWED BY (:) SHALL BE PER ANNEX A3 OF TPI1-2002 SEC.3. A SEAL ON THIS DRAWING INDICATES ACCEPTANCE OF PROFESSIONAL ENGINEERING RESPONSIBILITY SOLELY FOR THE TRUSS COMPONENT DESIGN SHOWN. THE SUITABILITY AND USE OF THIS COMPONENT FOR ANY BUILDING IS THE RESPONSIBILITY OF THE BUILDING DESIGNER PER ANSI/TPI 1 SEC. 2.

DOUGLAS FLEMING LICENSE No. 66648 STATE OF FLORIDA PROFESSIONAL ENGINEER

11/03/2010

TC LL	20.0 PSF	REF	R2327- 61404
TC DL	7.0 PSF	DATE	11/03/10
BC DL	10.0 PSF	DRW	HCUSR2327 10307130
BC LL	0.0 PSF	HC-ENG	SSB/DF
TOT.LD.	37.0 PSF	SEQN-	338303
DUR.FAC.	1.25	FROM	JRG
SPACING	24.0"	JREF-	1U6L2327Z10

(10700-HOUSE ACCT. BAGGETT RES - SJ5B)

Top chord 2x4 SP #2 Dense
Bot chord 2x4 SP #2 Dense

Roof overhang supports 2.00 psf soffit load.

In lieu of rigid ceiling use purlins to brace BC @ 24" OC.

Deflection meets L/360 live and L/240 total load.

120 mph wind, 15.00 ft mean hgt, ASCE 7-05, CLOSED bldg, not located within 4.50 ft from roof edge, CAT II, EXP B, wind TC DL=4.2 psf, wind BC DL=5.0 psf. Iw=1.00 GCpi(+/-)=0.18

Wind reactions based on MWFRS pressures.

Bottom chord checked for 10.00 psf non-concurrent live load.

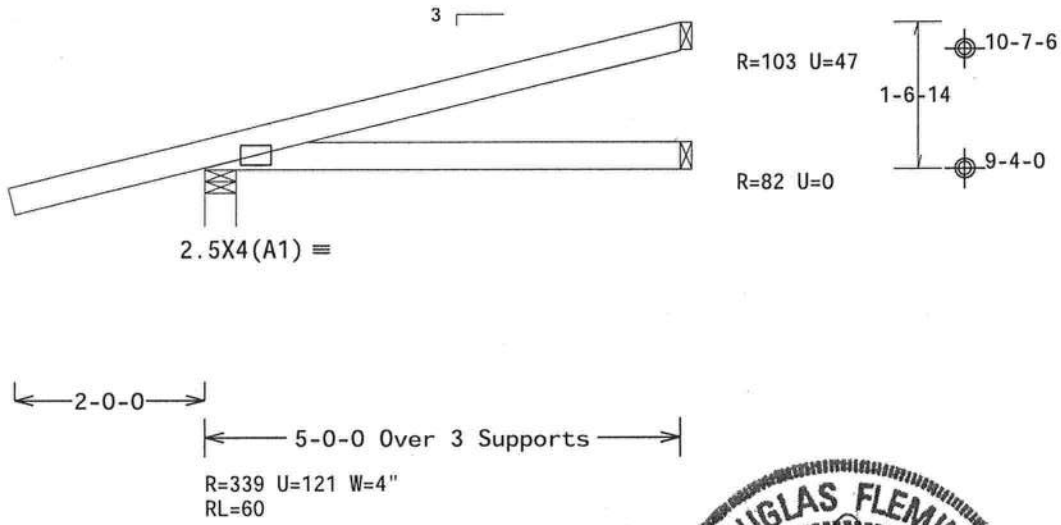

Design Crit: FBC2007Res/TPI-2002(STD)
FT/RT=20%(0%)/10(0)

PLT TYP. Wave

9.01.02.0210.16 QTY:

FL/-/2/-/-/R/-

Scale =.5"/Ft.

ALPINE
ITW Building Components Group Inc.
Haines City, FL 33844
FL COA #0 278

WARNING TRUSSES REQUIRE EXTREME CARE IN FABRICATION, HANDLING, SHIPPING, INSTALLING AND BRACING. REFER TO BCSI (BUILDING COMPONENT SAFETY INFORMATION), PUBLISHED BY TPI (TRUSS PLATE INSTITUTE, 218 NORTH LEE STREET, SUITE 312, ALEXANDRIA, VA. 22314) AND WTCA (WOOD TRUSS COUNCIL OF AMERICA, 6300 ENTERPRISE LANE, MADISON, WI 53719) FOR SAFETY PRACTICES PRIOR TO PERFORMING THESE FUNCTIONS. UNLESS OTHERWISE INDICATED TOP CHORD SHALL HAVE PROPERLY ATTACHED STRUCTURAL PANELS AND BOTTOM CHORD SHALL HAVE A PROPERLY ATTACHED RIGID CEILING.

IMPORTANTFURNISH A COPY OF THIS DESIGN TO THE INSTALLATION CONTRACTOR. ITW BCG, INC. SHALL NOT BE RESPONSIBLE FOR ANY DEVIATION FROM THIS DESIGN; ANY FAILURE TO BUILD THE TRUSS IN CONFORMANCE WITH TPI; OR FABRICATING, HANDLING, SHIPPING, INSTALLING & BRACING OF TRUSSES. DESIGN CONFORMS WITH APPLICABLE PROVISIONS OF NDS (NATIONAL DESIGN SPEC. BY AF&PA) AND TPI. ITW BCG CONNECTOR PLATES ARE MADE OF 20/18/16GA (W,H/SS/K) ASTM A653 GRADE 40/60 (W, K/H,SS) GALV. STEEL. APPLY PLATES TO EACH FACE OF TRUSS AND, UNLESS OTHERWISE LOCATED ON THIS DESIGN, POSITION PER DRAWINGS 160A-2. ANY INSPECTION OF PLATES FOLLOWED BY (i) SHALL BE PER ANNEX A3 OF TPI1-2002 SEC.3. A SEAL ON THIS DRAWING INDICATES ACCEPTANCE OF PROFESSIONAL ENGINEERING RESPONSIBILITY SOLELY FOR THE TRUSS COMPONENT DESIGN SHOWN. THE SUITABILITY AND USE OF THIS COMPONENT FOR ANY BUILDING IS THE RESPONSIBILITY OF THE BUILDING DESIGNER PER ANSI/TPI 1 SEC. 2.

DOUGLAS FLEMING LICENSE No. 66648 STATE OF FLORIDA PROFESSIONAL ENGINEER

11/03/2010

TC LL	20.0 PSF	REF	R2327- 61405
TC DL	7.0 PSF	DATE	11/03/10
BC DL	10.0 PSF	DRW	HCUSR2327 10307112
BC LL	0.0 PSF	HC-ENG	SSB/DF
TOT.LD.	37.0 PSF	SEQN-	337967
DUR.FAC.	1.25	FROM	JRG
SPACING	24.0"	JREF-	1U6L2327Z10

(10700-HOUSE ACCT. BAGGETT RES - SJ3B)

Top chord 2x4 SP #2 Dense
Bot chord 2x4 SP #2 Dense

Roof overhang supports 2.00 psf soffit load.

In lieu of rigid ceiling use purlins to brace BC @ 24" OC.

Deflection meets L/360 live and L/240 total load.

120 mph wind, 15.00 ft mean hgt, ASCE 7-05, CLOSED bldg, Located anywhere in roof, CAT II, EXP B, wind TC DL=4.2 psf, wind BC DL=5.0 psf. Iw=1.00 GCpi(+/-)=0.18

Wind reactions based on MWFRS pressures.

Bottom chord checked for 10.00 psf non-concurrent live load.

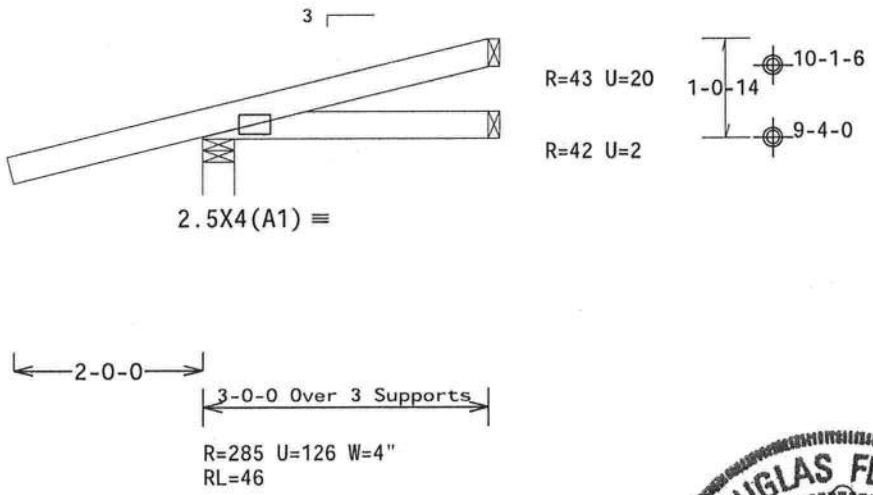

Design Crit: FBC2007Res/TPI-2002(STD)
FT/RT=20%(0%)/10(0)

PLT TYP. Wave | 9.01.02.0210.16 | QTY: 1 | FL/-/2/-/-/R/- | Scale =.5"/Ft.

ALPINE
ITW Building Components Group Inc.
Haines City, FL 33844
FL COA #0 278

WARNING TRUSSES REQUIRE EXTREME CARE IN FABRICATION, HANDLING, SHIPPING, INSTALLING AND BRACING. REFER TO BCSI (BUILDING COMPONENT SAFETY INFORMATION), PUBLISHED BY TPI (TRUSS PLATE INSTITUTE, 218 NORTH LEE STREET, SUITE 312, ALEXANDRIA, VA, 22314) AND WTCA (WOOD TRUSS COUNCIL OF AMERICA, 6300 ENTERPRISE LANE, MADISON, WI 53719) FOR SAFETY PRACTICES PRIOR TO PERFORMING THESE FUNCTIONS. UNLESS OTHERWISE INDICATED TOP CHORD SHALL HAVE PROPERLY ATTACHED STRUCTURAL PANELS AND BOTTOM CHORD SHALL HAVE A PROPERLY ATTACHED RIGID CEILING.

IMPORTANTFURNISH A COPY OF THIS DESIGN TO THE INSTALLATION CONTRACTOR. ITW BCG, INC. SHALL NOT BE RESPONSIBLE FOR ANY DEVIATION FROM THIS DESIGN; ANY FAILURE TO BUILD THE TRUSS IN CONFORMANCE WITH TPI; OR FABRICATING, HANDLING, SHIPPING, INSTALLING & BRACING OF TRUSSES.
DESIGN CONFORMS WITH APPLICABLE PROVISIONS OF NDS (NATIONAL DESIGN SPEC. BY AF&PA) AND TPI. ITW BCG CONNECTOR PLATES ARE MADE OF 20/18/16GA (W,H/SS/K) ASTM A653 GRADE 40/60 (W, K/H,SS) GALV. STEEL. APPLY PLATES TO EACH FACE OF TRUSS AND, UNLESS OTHERWISE LOCATED ON THIS DESIGN. POSITION PER DRAWINGS 160A-ANY INSPECTION OF PLATES FOLLOWED BY (:) SHALL BE PER ANNEX A3 OF TPI1-2002 SEC.3. A SEAL ON THIS DRAWING INDICATES ACCEPTANCE OF PROFESSIONAL ENGINEERING RESPONSIBILITY SOLELY FOR THE TRUSS COMPONENT DESIGN SHOWN. THE SUITABILITY AND USE OF THIS COMPONENT FOR ANY BUILDING IS THE RESPONSIBILITY OF THE BUILDING DESIGNER PER ANSI/TPI 1 SEC. 2.

DOUGLAS FLEMING LICENSE No. 66648 STATE OF FLORIDA PROFESSIONAL ENGINEER
11/03/2010

TC LL	20.0 PSF	REF	R2327- 61406
TC DL	7.0 PSF	DATE	11/03/10
BC DL	10.0 PSF	DRW	HCUSR2327 10307113
BC LL	0.0 PSF	HC-ENG	SSB/DF
TOT.LD.	37.0 PSF	SEQN-	337979
DUR.FAC.	1.25	FROM	JRG
SPACING	24.0"	JREF-	1U6L2327Z10

(10700-HOUSE ACCT. BAGGETT RES - SJ1B)

Top chord 2x4 SP #2 Dense
Bot chord 2x4 SP #2 Dense

Roof overhang supports 2.00 psf soffit load.

In lieu of rigid ceiling use purlins to brace BC @ 24" OC.

Deflection meets L/360 live and L/240 total load.

120 mph wind, 15.00 ft mean hgt, ASCE 7-05, CLOSED bldg, Located anywhere in roof, CAT II, EXP B, wind TC DL=4.2 psf, wind BC DL=5.0 psf. Iw=1.00 GCpi(+/-)=0.18

Wind reactions based on MWFRS pressures.

Bottom chord checked for 10.00 psf non-concurrent live load.

R=-64 Rw=57 U=41

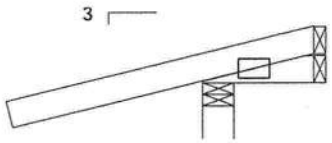

2.5X4(A1) ≡

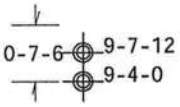

R=1 Rw=39 U=23

2-0-0

1-2-0 Over 3 Supports

R=305 U=179 W=4"
RL=33

Design Crit: FBC2007Res/TPI-2002(STD)

PLT TYP. Wave

FT/RT=20%(0%)/10(0)

9.01.02.0210.16

QTY:

FL/-/2/-/-/R/-

Scale =.5"/Ft.

ALPINE

ITW Building Components Group Inc.

Haines City, FL 33844
FL COA #0 278

WARNING TRUSSES REQUIRE EXTREME CARE IN FABRICATION, HANDLING, SHIPPING, INSTALLING AND BRACING. REFER TO BCSI (BUILDING COMPONENT SAFETY INFORMATION), PUBLISHED BY TPI (TRUSS PLATE INSTITUTE, 218 NORTH LEE STREET, SUITE 312, ALEXANDRIA, VA. 22314) AND WTCA (WOOD TRUSS COUNCIL OF AMERICA, 6300 ENTERPRISE LANE, MADISON, WI 53719) FOR SAFETY PRACTICES PRIOR TO PERFORMING THESE FUNCTIONS. UNLESS OTHERWISE INDICATED TOP CHORD SHALL HAVE PROPERLY ATTACHED STRUCTURAL PANELS AND BOTTOM CHORD SHALL HAVE A PROPERLY ATTACHED RIGID CEILING.

IMPORTANTFURNISH A COPY OF THIS DESIGN TO THE INSTALLATION CONTRACTOR. ITW BCG, INC. SHALL NOT BE RESPONSIBLE FOR ANY DEVIATION FROM THIS DESIGN; ANY FAILURE TO BUILD THE TRUSS IN COMFORMANCE WITH TPI; OR FABRICATING, HANDLING, SHIPPING, INSTALLING & BRACING OF TRUSSES.
DESIGN CONFORMS WITH APPLICABLE PROVISIONS OF NDS (NATIONAL DESIGN SPEC. BY AF&PA) AND TPI. ITW BCG CONNECTOR PLATES ARE MADE OF 20/18/16GA (W,H/SS/K) ASTM A653 GRADE 40/60 (W, K/H,SS) GALV. STEEL. APPLY PLATES TO EACH FACE OF TRUSS AND, UNLESS OTHERWISE LOCATED ON THIS DESIGN, POSITION PER DRAWINGS 160A-2. ANY INSPECTION OF PLATES FOLLOWED BY (I) SHALL BE PER ANNEX A3 OF TPI1-2002 SEC.3. A SEAL ON THIS DRAWING INDICATES ACCEPTANCE OF PROFESSIONAL ENGINEERING RESPONSIBILITY SOLELY FOR THE TRUSS COMPONENT DESIGN SHOWN. THE SUITABILITY AND USE OF THIS COMPONENT FOR ANY BUILDING IS THE RESPONSIBILITY OF THE BUILDING DESIGNER PER ANSI/TPI 1 SEC. 2.

DOUGLAS FLEMING LICENSE No. 66648 STATE OF FLORIDA PROFESSIONAL ENGINEER

11/03/2010

TC LL	20.0 PSF	REF	R2327- 61407
TC DL	7.0 PSF	DATE	11/03/10
BC DL	10.0 PSF	DRW	HCUSR2327 10307114
BC LL	0.0 PSF	HC-ENG	SSB/DF
TOT.LD.	37.0 PSF	SEQN-	337976
DUR.FAC.	1.25	FROM	JRG
SPACING	24.0"	JREF-	1U6L2327Z10

(10700-HOUSE ACCT. BAGGETT RES - SJ6C)

Top chord 2x4 SP #2 Dense
Bot chord 2x4 SP #2 Dense
Webs 2x4 SP #3

Left end vertical not exposed to wind pressure.

In lieu of rigid ceiling use purlins to brace BC @ 24" OC.

Bottom chord checked for 10.00 psf non-concurrent live load.

MWFRS loads based on trusses located at least 15.00 ft. from roof edge.

120 mph wind, 15.00 ft mean hgt, ASCE 7-05, CLOSED bldg, not located within 4.50 ft from roof edge, CAT II, EXP B, wind TC DL=4.2 psf, wind BC DL=5.0 psf. Iw=1.00 GCpi(+/-)=0.18

Wind reactions based on MWFRS pressures.

Truss passed check for 20 psf additional bottom chord live load in areas with 42"-high x 24"-wide clearance.

Deflection meets L/360 live and L/240 total load.

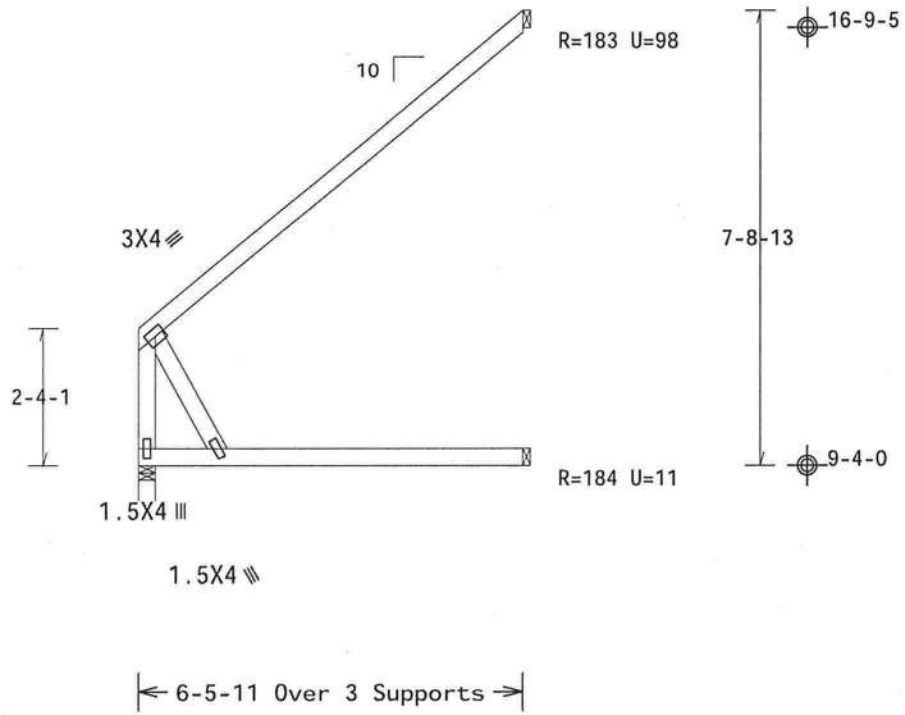

Design Crit: FBC2007Res/TPI-2002(STD)
FT/RT=20%(0%)/10(0)

PLT TYP. Wave

9.01.02.0210.16 QTY 3

FL/-/2/-/-/R/-

Scale =.3125"/Ft.

WARNING TRUSSES REQUIRE EXTREME CARE IN FABRICATION, HANDLING, SHIPPING, INSTALLING AND BRACING. REFER TO BCSI (BUILDING COMPONENT SAFETY INFORMATION), PUBLISHED BY TPI (TRUSS PLATE INSTITUTE, 218 NORTH LEE STREET, SUITE 312, ALEXANDRIA, VA. 22314) AND WTCA (WOOD TRUSS COUNCIL OF AMERICA, 6300 ENTERPRISE LANE, MADISON, WI 53719) FOR SAFETY PRACTICES PRIOR TO PERFORMING THESE FUNCTIONS. UNLESS OTHERWISE INDICATED TOP CHORD SHALL HAVE PROPERLY ATTACHED STRUCTURAL PANELS AND BOTTOM CHORD SHALL HAVE A PROPERLY ATTACHED RIGID CEILING.

IMPORTANTFURNISH A COPY OF THIS DESIGN TO THE INSTALLATION CONTRACTOR. ITW BCG, INC. SHALL NOT BE RESPONSIBLE FOR ANY DEVIATION FROM THIS DESIGN; ANY FAILURE TO BUILD THE TRUSS IN COMFORMANCE WITH TPI; OR FABRICATING, HANDLING, SHIPPING, INSTALLING & BRACING OF TRUSSES. THIS DESIGN CONFORMS WITH APPLICABLE PROVISIONS OF NDS (NATIONAL DESIGN SPEC, BY AF&PA) AND TPI. THE CONNECTOR PLATES ARE MADE OF 20/18/16GA (W,H/SS/K) ASTM A653 GRADE 40/60 (W, K/H,SS) GALV. STEEL. APPLY PLATES TO EACH FACE OF TRUSS AND, UNLESS OTHERWISE LOCATED ON THIS DESIGN, POSITION PER DRAWINGS 160A. ANY INSPECTION OF PLATES FOLLOWED BY (i) SHALL BE PER ANNEX A3 OF TPI1-2002 SEC.3. A SEAL ON THIS DRAWING INDICATES ACCEPTANCE OF PROFESSIONAL ENGINEERING RESPONSIBILITY SOLELY FOR THE TRUSS COMPONENT DESIGN SHOWN. THE SUITABILITY AND USE OF THIS COMPONENT FOR ANY BUILDING IS THE RESPONSIBILITY OF THE BUILDING DESIGNER PER ANSI/TPI 1 SEC. 2.

ALPINE
ITW Building Components Group Inc.
Haines City, FL 33844
FL COA #0 278

DOUGLAS FLEMING LICENSE No. 66648 STATE OF FLORIDA PROFESSIONAL ENGINEER
11/03/2010

TC LL	20.0 PSF	REF	R2327- 61408
TC DL	7.0 PSF	DATE	11/03/10
BC DL	10.0 PSF	DRW	HCUSR2327 10307129
BC LL	0.0 PSF	HC-ENG	SSB/DF
TOT.LD.	37.0 PSF	SEQN-	338365
DUR.FAC.	1.25	FROM	JRG
SPACING	24.0"	JREF-	1U6L2327Z10

(10700-HOUSE ACCT. BAGGETT RES - SJ5C)

Top chord 2x4 SP #2 Dense
Bot chord 2x4 SP #2 Dense
Webs 2x4 SP #3

Left end vertical not exposed to wind pressure.

Calculated horizontal deflection is 0.35" due to live load and 0.23" due to dead load.

Bottom chord checked for 10.00 psf non-concurrent live load.

Deflection meets L/360 live and L/240 total load.

120 mph wind, 15.00 ft mean hgt, ASCE 7-05, CLOSED bldg, not located within 4.50 ft from roof edge, CAT II, EXP B, wind TC DL=4.2 psf, wind BC DL=5.0 psf. Iw=1.00 GCpi(+/-)=0.18

Wind reactions based on MWFRS pressures.

In lieu of rigid ceiling use purlins to brace BC @ 24" OC.

Truss passed check for 20 psf additional bottom chord live load in areas with 42"-high x 24"-wide clearance.

MWFRS loads based on trusses located at least 15.00 ft. from roof edge.

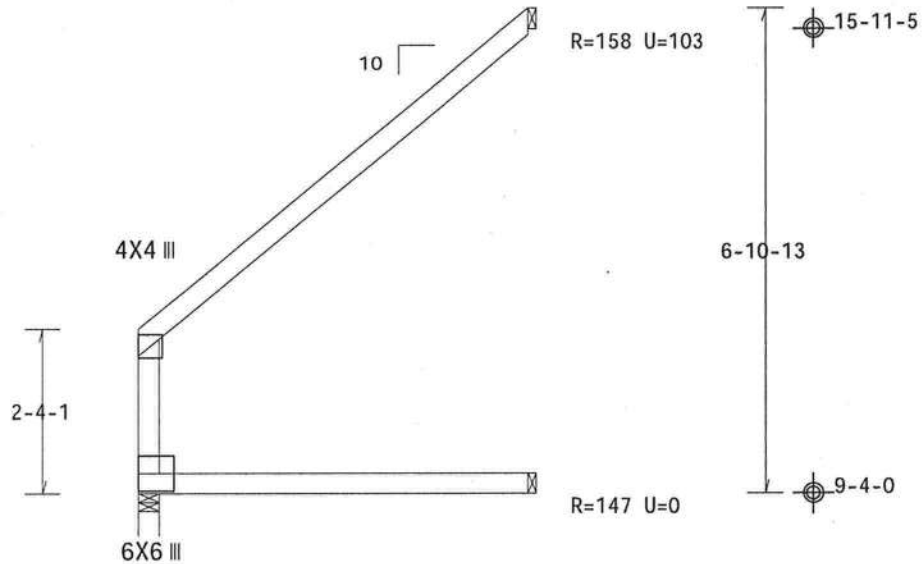

← 5-5-11 Over 3 Supports →

R=252 U=0 W=3.5"
RL=111/-77

Design Crit: FBC2007Res/TPI-2002(STD)
FT/RT=20%(0%)/10(0)

PLT TYP. Wave

9.01.02.0210.16 QTY 3

FL/-/2/-/-/R/-

Scale =.375"/Ft.

ALPINE
ITW Building Components Group Inc.
Haines City, FL 33844
FL COA #0 278

WARNING TRUSSES REQUIRE EXTREME CARE IN FABRICATION, HANDLING, SHIPPING, INSTALLING AND BRACING. REFER TO BCSI (BUILDING COMPONENT SAFETY INFORMATION), PUBLISHED BY TPI (TRUSS PLATE INSTITUTE, 218 NORTH LEE STREET, SUITE 312, ALEXANDRIA, VA, 22314) AND WTCA (WOOD TRUSS COUNCIL OF AMERICA, 6300 ENTERPRISE LANE, MADISON, WI 53719) FOR SAFETY PRACTICES PRIOR TO PERFORMING THESE FUNCTIONS. UNLESS OTHERWISE INDICATED TOP CHORD SHALL HAVE PROPERLY ATTACHED STRUCTURAL PANELS AND BOTTOM CHORD SHALL HAVE A PROPERLY ATTACHED RIGID CEILING.

IMPORTANT FURNISH A COPY OF THIS DESIGN TO THE INSTALLATION CONTRACTOR. ITW BCG, INC. SHALL NOT BE RESPONSIBLE FOR ANY DEVIATION FROM THIS DESIGN; ANY FAILURE TO BUILD THE TRUSS IN COMFORMANCE WITH TPI; OR FABRICATING, HANDLING, SHIPPING, INSTALLING & BRACING OF TRUSSES.
DESIGN CONFORMS WITH APPLICABLE PROVISIONS OF NDS (NATIONAL DESIGN SPEC, BY AF&PA) AND TPI. ITW BCG CONNECTOR PLATES ARE MADE OF 20/18/16GA (W,H/SS/K) ASTM A653 GRADE 40/60 (W, K/H,SS) GALV. STEEL. APPLY PLATES TO EACH FACE OF TRUSS AND, UNLESS OTHERWISE LOCATED ON THIS DESIGN, POSITION PER DRAWINGS 160A. ANY INSPECTION OF PLATES FOLLOWED BY (I) SHALL BE PER ANNEX A3 OF TPI1-2002 SEC.3. A SEAL ON THIS DRAWING INDICATES ACCEPTANCE OF PROFESSIONAL ENGINEERING RESPONSIBILITY SOLELY FOR THE TRUSS COMPONENT DESIGN SHOWN. THE SUITABILITY AND USE OF THIS COMPONENT FOR ANY BUILDING IS THE RESPONSIBILITY OF THE BUILDING DESIGNER PER ANSI/TPI 1 SEC. 2.

DOUGLAS FLEMING LICENSE No. 66648 STATE OF FLORIDA PROFESSIONAL ENGINEER

11/03/2010

TC LL	20.0 PSF	REF	R2327- 61409
TC DL	7.0 PSF	DATE	11/03/10
BC DL	10.0 PSF	DRW	HCUSR2327 10307132
BC LL	0.0 PSF	HC-ENG	SSB/DF
TOT.LD.	37.0 PSF	SEQN-	338368
DUR.FAC.	1.25	FROM	JRG
SPACING	24.0"	JREF-	1U6L2327Z10

(10700-HOUSE ACCT. BAGGETT RES - SJ4C)

Top chord 2x4 SP #2 Dense
Bot chord 2x4 SP #2 Dense
Webs 2x4 SP #3

Left end vertical not exposed to wind pressure.

Calculated horizontal deflection is 0.27" due to live load and 0.18" due to dead load.

Bottom chord checked for 10.00 psf non-concurrent live load.

Deflection meets L/360 live and L/240 total load.

120 mph wind, 15.00 ft mean hgt, ASCE 7-05, CLOSED bldg, Located anywhere in roof, CAT II, EXP B, wind TC DL=4.2 psf, wind BC DL=5.0 psf. Iw=1.00 GCpi(+/-)=0.18

Wind reactions based on MWFRS pressures.

In lieu of rigid ceiling use purlins to brace BC @ 24" OC.

Truss passed check for 20 psf additional bottom chord live load in areas with 42"-high x 24"-wide clearance.

MWFRS loads based on trusses located at least 15.00 ft. from roof edge.

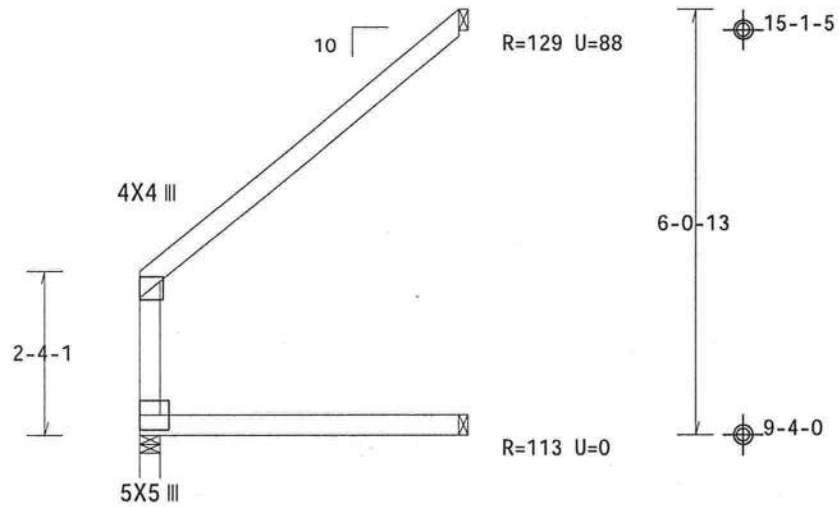

~~4-5-11 Over 3 Supports~~

R=197 U=0 W=3.5"
RL=91/-63

Design Crit: FBC2007Res/TPI-2002(STD)
FT/RT=20%(0%)/10(0)

PLT TYP. Wave

9.01.02.0210.16 QTY: 2

FL/-/2/-/-/R/-

Scale =.375"/Ft.

ALPINE
ITW Building Components Group Inc.
Haines City, FL 33844
FL COA #0 278

WARNING TRUSSES REQUIRE EXTREME CARE IN FABRICATION, HANDLING, SHIPPING, INSTALLING AND BRACING. REFER TO BCSI (BUILDING COMPONENT SAFETY INFORMATION), PUBLISHED BY TPI (TRUSS PLATE INSTITUTE, 218 NORTH LEE STREET, SUITE 312, ALEXANDRIA, VA, 22314) AND WTCA (WOOD TRUSS COUNCIL OF AMERICA, 6300 ENTERPRISE LANE, MADISON, WI 53719) FOR SAFETY PRACTICES PRIOR TO PERFORMING THESE FUNCTIONS. UNLESS OTHERWISE INDICATED TOP CHORD SHALL HAVE PROPERLY ATTACHED STRUCTURAL PANELS AND BOTTOM CHORD SHALL HAVE A PROPERLY ATTACHED RIGID CEILING.

IMPORTANTFURNISH A COPY OF THIS DESIGN TO THE INSTALLATION CONTRACTOR. ITW BCG, INC. SHALL NOT BE RESPONSIBLE FOR ANY DEVIATION FROM THIS DESIGN; ANY FAILURE TO BUILD THE TRUSS IN CONFORMANCE WITH TPI; OR FABRICATING, HANDLING, SHIPPING, INSTALLING & BRACING OF TRUSSES.
DESIGN CONFORMS WITH APPLICABLE PROVISIONS OF NDS (NATIONAL DESIGN SPEC, BY AF&PA) AND TPI. ITW BCG CONNECTOR PLATES ARE MADE OF 20/18/16GA (W,H/SS/K) ASTM A653 GRADE 40/60 (W, K/H,SS) GALV. STEEL. APPLY PLATES TO EACH FACE OF TRUSS AND, UNLESS OTHERWISE LOCATED ON THIS DESIGN, POSITION PER DRAWINGS 160A-7. ANY INSPECTION OF PLATES FOLLOWED BY (;) SHALL BE PER ANNEX A3 OF TPI1-2002 SEC.3. A SEAL ON THIS DRAWING INDICATES ACCEPTANCE OF PROFESSIONAL ENGINEERING RESPONSIBILITY SOLELY FOR THE TRUSS COMPONENT DESIGN SHOWN. THE SUITABILITY AND USE OF THIS COMPONENT FOR ANY BUILDING IS THE RESPONSIBILITY OF THE BUILDING DESIGNER PER ANSI/TPI 1 SEC. 2.

DOUGLAS FLEMING LICENSE No. 66648 STATE OF FLORIDA PROFESSIONAL ENGINEER

11/03/2010

TC LL	20.0 PSF	REF	R2327- 61410
TC DL	7.0 PSF	DATE	11/03/10
BC DL	10.0 PSF	DRW	HCUSR2327 10307133
BC LL	0.0 PSF	HC-ENG	SSB/DF
TOT.LD.	37.0 PSF	SEQN-	338374
DUR.FAC.	1.25	FROM	JRG
SPACING	24.0"	JREF-	1U6L2327Z10

(10700-HOUSE ACCT. BAGGETT RES - SJ3C)

Top chord 2x4 SP #2 Dense
Bot chord 2x4 SP #2 Dense
Webs 2x4 SP #3

Left end vertical not exposed to wind pressure.

Calculated horizontal deflection is 0.20" due to live load and 0.13" due to dead load.

Deflection meets L/360 live and L/240 total load.

120 mph wind, 15.00 ft mean hgt, ASCE 7-05, CLOSED bldg, Located anywhere in roof, CAT II, EXP B, wind TC DL=4.2 psf, wind BC DL=5.0 psf. Iw=1.00 GCpi(+/-)=0.18

Wind reactions based on MWFRS pressures.

In lieu of rigid ceiling use purlins to brace BC @ 24" OC.

Bottom chord checked for 10.00 psf non-concurrent live load.

MWFRS loads based on trusses located at least 15.00 ft. from roof edge.

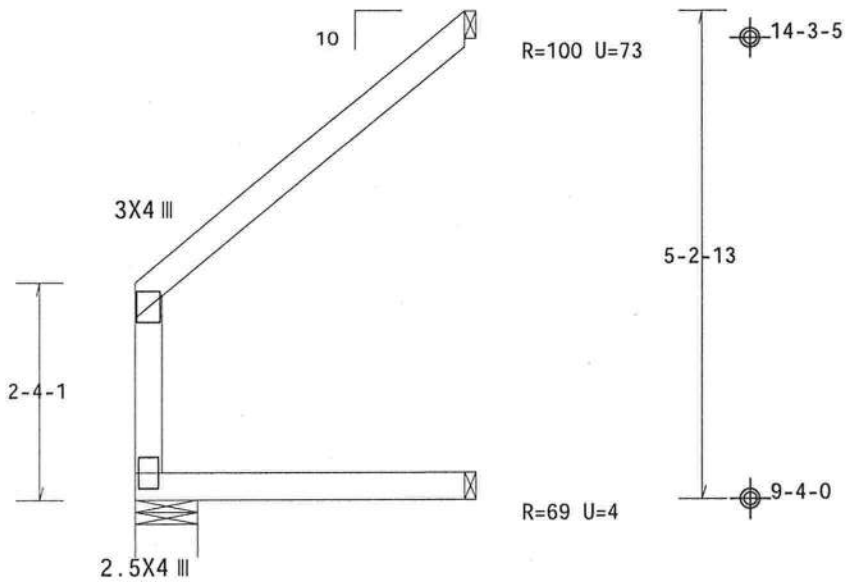

< 3-5-11 Over 3 Supports >

R=136 U=0 W=8"
RL=70/-48

Design Crit: FBC2007Res/TPI-2002(STD)
FT/RT=20%(0%)/10(0)

PLT TYP. Wave

9.01.02.0210.16 QTY: 2

FL/-/2/-/-/R/-

Scale =.5"/Ft.

ALPINE
ITW Building Components Group Inc.
Haines City, FL 33844
FL COA #0 278

WARNING TRUSSES REQUIRE EXTREME CARE IN FABRICATION, HANDLING, SHIPPING, INSTALLING AND BRACING. REFER TO BCSI (BUILDING COMPONENT SAFETY INFORMATION), PUBLISHED BY TPI (TRUSS PLATE INSTITUTE, 218 NORTH LEE STREET, SUITE 312, ALEXANDRIA, VA, 22314) AND WTCA (WOOD TRUSS COUNCIL OF AMERICA, 6300 ENTERPRISE LANE, MADISON, WI 53719) FOR SAFETY PRACTICES PRIOR TO PERFORMING THESE FUNCTIONS. UNLESS OTHERWISE INDICATED TOP CHORD SHALL HAVE PROPERLY ATTACHED STRUCTURAL PANELS AND BOTTOM CHORD SHALL HAVE A PROPERLY ATTACHED RIGID CEILING.

IMPORTANTFURNISH A COPY OF THIS DESIGN TO THE INSTALLATION CONTRACTOR. ITW BCG, INC. SHALL NOT BE RESPONSIBLE FOR ANY DEVIATION FROM THIS DESIGN; ANY FAILURE TO BUILD THE TRUSS IN CONFORMANCE WITH TPI; OR FABRICATING, HANDLING, SHIPPING, INSTALLING & BRACING OF TRUSSES. DESIGN CONFORMS WITH APPLICABLE PROVISIONS OF NDS (NATIONAL DESIGN SPEC, BY AF&PA) AND TPI. ITW BCG CONNECTOR PLATES ARE MADE OF 20/18/16GA (W,H/SS/K) ASTM A653 GRADE 40/60 (W, K/H,SS) GALV. STEEL. APPLY PLATES TO EACH FACE OF TRUSS AND, UNLESS OTHERWISE LOCATED ON THIS DESIGN, POSITION PER DRAWINGS 160A-2. ANY INSPECTION OF PLATES FOLLOWED BY (i) SHALL BE PER ANNEX A3 OF TPI1-2002 SEC.3. A SEAL ON THIS DRAWING INDICATES ACCEPTANCE OF PROFESSIONAL ENGINEERING RESPONSIBILITY SOLELY FOR THE TRUSS COMPONENT DESIGN SHOWN. THE SUITABILITY AND USE OF THIS COMPONENT FOR ANY BUILDING IS THE RESPONSIBILITY OF THE BUILDING DESIGNER PER ANSI/TPI 1 SEC. 2.

DOUGLAS FLEMING LICENSE No. 66648 STATE OF FLORIDA PROFESSIONAL ENGINEER

11/03/2010

TC LL	20.0 PSF	REF R2327- 61411
TC DL	7.0 PSF	DATE 11/03/10
BC DL	10.0 PSF	DRW HCUSR2327 10307134
BC LL	0.0 PSF	HC-ENG SSB/DF
TOT.LD.	37.0 PSF	SEQN- 338377
DUR.FAC.	1.25	FROM JRG
SPACING	24.0"	JREF- 1U6L2327Z10

(10700-HOUSE ACCT. BAGGETT RES - SJ2C)

Top chord 2x4 SP #2 Dense
Bot chord 2x4 SP #2 Dense
Webs 2x4 SP #3

Left end vertical not exposed to wind pressure.

Calculated horizontal deflection is 0.21" due to live load and 0.10" due to dead load.

Deflection meets L/360 live and L/240 total load.

120 mph wind, 15.00 ft mean hgt, ASCE 7-05, CLOSED bldg, Located anywhere in roof, CAT II, EXP B, wind TC DL=4.2 psf, wind BC DL=5.0 psf. Iw=1.00 GCpi(+/-)=0.18

Wind reactions based on MWFRS pressures.

In lieu of rigid ceiling use purlins to brace BC @ 24" OC.

Bottom chord checked for 10.00 psf non-concurrent live load.

MWFRS loads based on trusses located at least 7.50 ft. from roof edge.

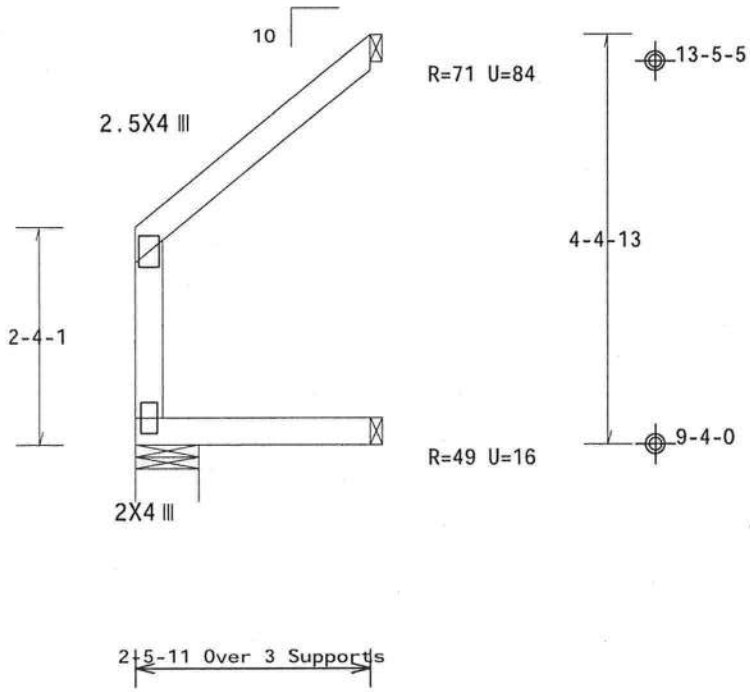

Design Crit: FBC2007Res/TPI-2002(STD)

PLT TYP. Wave | FT/RT=20%(0%)/10(0) | 9.01.02.0210.16 | QTY:4 | FL/-/2/-/-/R/- | Scale =.5"/Ft.

DOUGLAS FLEMING LICENSE No.66648 STATE OF FLORIDA PROFESSIONAL ENGINEER
11/03/2010

ALPINE
ITW Building Components Group Inc.
Haines City, FL 33844
FL COA #0 278

WARNING TRUSSES REQUIRE EXTREME CARE IN FABRICATION, HANDLING, SHIPPING, INSTALLING AND BRACING. REFER TO BCSI (BUILDING COMPONENT SAFETY INFORMATION), PUBLISHED BY TPI (TRUSS PLATE INSTITUTE, 218 NORTH LEE STREET, SUITE 312, ALEXANDRIA, VA, 22314) AND WTCA (WOOD TRUSS COUNCIL OF AMERICA, 6300 ENTERPRISE LANE, MADISON, WI 53719) FOR SAFETY PRACTICES PRIOR TO PERFORMING THESE FUNCTIONS. UNLESS OTHERWISE INDICATED TOP CHORD SHALL HAVE PROPERLY ATTACHED STRUCTURAL PANELS AND BOTTOM CHORD SHALL HAVE A PROPERLY ATTACHED RIGID CEILING.

IMPORTANTFURNISH A COPY OF THIS DESIGN TO THE INSTALLATION CONTRACTOR. ITW BCG, INC. SHALL NOT BE RESPONSIBLE FOR ANY DEVIATION FROM THIS DESIGN; ANY FAILURE TO BUILD THE TRUSS IN COMFORMANCE WITH TPI; OR FABRICATING, HANDLING, SHIPPING, INSTALLING & BRACING OF TRUSSES. DESIGN CONFORMS WITH APPLICABLE PROVISIONS OF NDS (NATIONAL DESIGN SPEC. BY AF&PA) AND TPI. ITW BCG CONNECTOR PLATES ARE MADE OF 20/18/16GA (W,H/SS/K) ASTM A653 GRADE 40/60 (W, K/H,SS) GALV. STEEL. APPLY PLATES TO EACH FACE OF TRUSS AND, UNLESS OTHERWISE LOCATED ON THIS DESIGN, POSITION PER DRAWINGS 160A-Z. ANY INSPECTION OF PLATES FOLLOWED BY (i) SHALL BE PER ANNEX A3 OF TPI1-2002 SEC.3. A SEAL ON THIS DRAWING INDICATES ACCEPTANCE OF PROFESSIONAL ENGINEERING RESPONSIBILITY SOLELY FOR THE TRUSS COMPONENT DESIGN SHOWN. THE SUITABILITY AND USE OF THIS COMPONENT FOR ANY BUILDING IS THE RESPONSIBILITY OF THE BUILDING DESIGNER PER ANSI/TPI 1 SEC. 2.

TC LL	20.0 PSF	REF	R2327- 61412
TC DL	7.0 PSF	DATE	11/03/10
BC DL	10.0 PSF	DRW	HCUSR2327 10307135
BC LL	0.0 PSF	HC-ENG	SSB/DF
TOT.LD.	37.0 PSF	SEQN-	338153
DUR.FAC.	1.25	FROM	JRG
SPACING	24.0"	JREF-	1U6L2327Z10

(10700-HOUSE ACCT. BAGGETT RES - SJ1C)

Top chord 2x4 SP #2 Dense
Bot chord 2x4 SP #2 Dense
Webs 2x4 SP #3

Left end vertical not exposed to wind pressure.

In lieu of rigid ceiling use purlins to brace BC @ 24" OC.

Deflection meets L/360 live and L/240 total load.

120 mph wind, 15.00 ft mean hgt, ASCE 7-05, CLOSED bldg, Located anywhere in roof, CAT II, EXP B, wind TC DL=4.2 psf, wind BC DL=5.0 psf. Iw=1.00 GCpi(+/-)=0.18

Wind reactions based on MWFRS pressures.

Bottom chord checked for 10.00 psf non-concurrent live load.

MWFRS loads based on trusses located at least 7.50 ft. from roof edge.

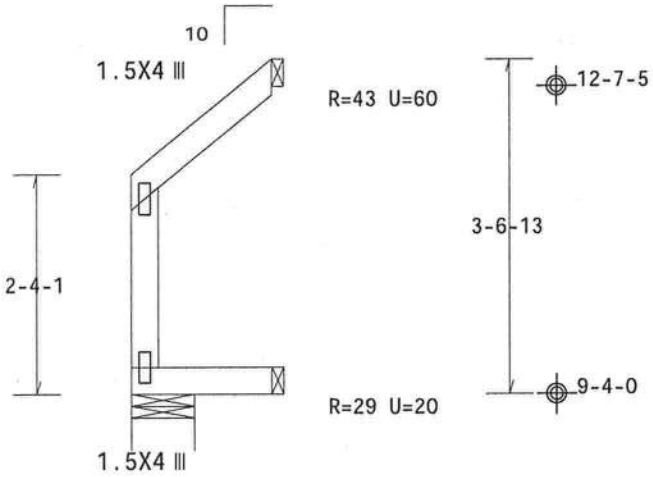

1-5-11 Over 3 Supports

R=58 Rw=64 U=9 W=8"
RL=39

Design Crit: FBC2007Res/TPI-2002(STD)
FT/RT=20%(0%)/10(0)

PLT TYP. Wave

9.02.02.0210.16 QTY 4 FL/-/2/-/-/R/- Scale =.5"/Ft.

ALPINE
ITW Building Components Group Inc.
Haines City, FL 33844
FL COA #0 278

WARNING TRUSSES REQUIRE EXTREME CARE IN FABRICATION, HANDLING, SHIPPING, INSTALLING AND BRACING. REFER TO BCSI (BUILDING COMPONENT SAFETY INFORMATION), PUBLISHED BY TPI (TRUSS PLATE INSTITUTE, 218 NORTH LEE STREET, SUITE 312, ALEXANDRIA, VA. 22314) AND WTCA (WOOD TRUSS COUNCIL OF AMERICA, 6300 ENTERPRISE LANE, MADISON, WI 53719) FOR SAFETY PRACTICES PRIOR TO PERFORMING THESE FUNCTIONS. UNLESS OTHERWISE INDICATED TOP CHORD SHALL HAVE PROPERLY ATTACHED STRUCTURAL PANELS AND BOTTOM CHORD SHALL HAVE A PROPERLY ATTACHED RIGID CEILING.

IMPORTANTFURNISH A COPY OF THIS DESIGN TO THE INSTALLATION CONTRACTOR. ITW BCG, INC. SHALL NOT BE RESPONSIBLE FOR ANY DEVIATION FROM THIS DESIGN; ANY FAILURE TO BUILD THE TRUSS IN CONFORMANCE WITH TPI; OR FABRICATING, HANDLING, SHIPPING, INSTALLING & BRACING OF TRUSSES. DESIGN CONFORMS WITH APPLICABLE PROVISIONS OF NDS (NATIONAL DESIGN SPEC. BY AF&PA) AND TPI. THIS DESIGN CONNECTOR PLATES ARE MADE OF 20/18/16GA (W,H/SS/K) ASTM A653 GRADE 40/60 (W, K/H,SS) GALV. STEEL. APPLY PLATES TO EACH FACE OF TRUSS AND, UNLESS OTHERWISE LOCATED ON THIS DESIGN, POSITION PER DRAWINGS 1600.2. ANY INSPECTION OF PLATES FOLLOWED BY (i) SHALL BE PER ANNEX A3 OF TPI1-2002 SEC.3. A SEAL ON THIS DRAWING INDICATES ACCEPTANCE OF PROFESSIONAL ENGINEERING RESPONSIBILITY SOLELY FOR THE TRUSS COMPONENT DESIGN SHOWN. THE SUITABILITY AND USE OF THIS COMPONENT FOR ANY BUILDING IS THE RESPONSIBILITY OF THE BUILDING DESIGNER PER ANSI/TPI 1 SEC. 2.

DOUGLAS FLEMING LICENSE No. 66648 STATE OF FLORIDA PROFESSIONAL ENGINEER

11/03/2010

TC LL	20.0 PSF	REF	R2327- 61413
TC DL	7.0 PSF	DATE	11/03/10
BC DL	10.0 PSF	DRW	HCUSR2327 10307136
BC LL	0.0 PSF	HC-ENG	SSB/DF
TOT.LD.	37.0 PSF	SEQN-	338159
DUR.FAC.	1.25	FROM	JRG
SPACING	24.0"	JREF-	1U6L2327Z10

(10700-HOUSE ACCT. BAGGETT RES - SJ5D)

Top chord 2x4 SP #2 Dense
Bot chord 2x4 SP #2 Dense
Webs 2x4 SP #3

Left end vertical not exposed to wind pressure.

In lieu of rigid ceiling use purlins to brace BC @ 24" OC.

Deflection meets L/360 live and L/240 total load.

120 mph wind, 15.00 ft mean hgt, ASCE 7-05, CLOSED bldg, not located within 4.50 ft from roof edge, CAT II, EXP B, wind TC DL=4.2 psf, wind BC DL=5.0 psf. Iw=1.00 GCpi(+/-)=0.18

Wind reactions based on MWFRS pressures.

Bottom chord checked for 10.00 psf non-concurrent live load.

MWFRS loads based on trusses located at least 15.00 ft. from roof edge.

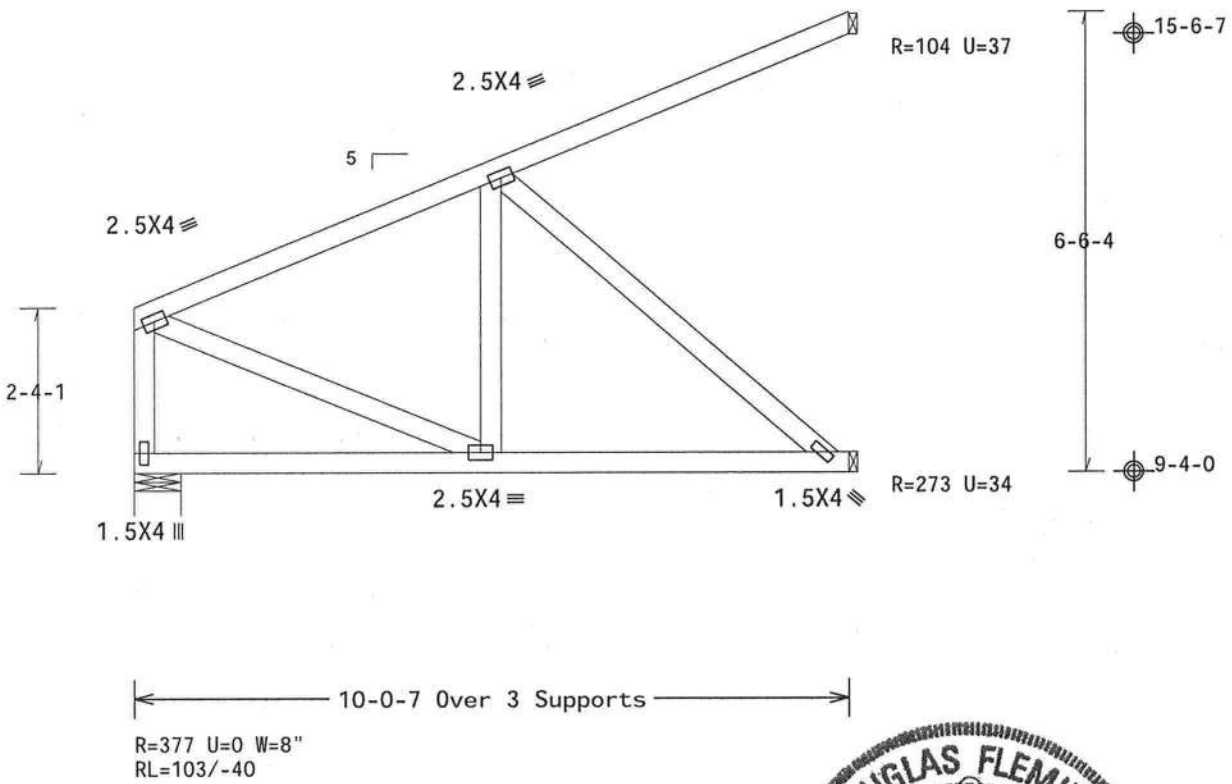

Design Crit: FBC2007Res/TPI-2002(STD)
FT/RT=20%(0%)/10(0)

PLT TYP. Wave | 9.01.02.0210.16 | QTY: 1 | FL/-/2/-/-/R/- | Scale =.375"/Ft.

ALPINE
ITW Building Components Group Inc.
Haines City, FL 33844
FL COA #0 278

WARNING TRUSSES REQUIRE EXTREME CARE IN FABRICATION, HANDLING, SHIPPING, INSTALLING AND BRACING. REFER TO BCSI (BUILDING COMPONENT SAFETY INFORMATION), PUBLISHED BY TPI (TRUSS PLATE INSTITUTE, 218 NORTH LEE STREET, SUITE 312, ALEXANDRIA, VA. 22314) AND WTCA (WOOD TRUSS COUNCIL OF AMERICA, 6300 ENTERPRISE LANE, MADISON, WI 53719) FOR SAFETY PRACTICES PRIOR TO PERFORMING THESE FUNCTIONS. UNLESS OTHERWISE INDICATED TOP CHORD SHALL HAVE PROPERLY ATTACHED STRUCTURAL PANELS AND BOTTOM CHORD SHALL HAVE A PROPERLY ATTACHED RIGID CEILING.

IMPORTANTFURNISH A COPY OF THIS DESIGN TO THE INSTALLATION CONTRACTOR. ITW BCG, INC. SHALL NOT BE RESPONSIBLE FOR ANY DEVIATION FROM THIS DESIGN; ANY FAILURE TO BUILD THE TRUSS IN COMFORMANCE WITH TPI; OR FABRICATING, HANDLING, SHIPPING, INSTALLING & BRACING OF TRUSSES. DESIGN CONFORMS WITH APPLICABLE PROVISIONS OF NDS (NATIONAL DESIGN SPEC, BY AF&PA) AND TPI. ITW BCG CONNECTOR PLATES ARE MADE OF 20/18/16GA (W,H/SS/K) ASTM A653 GRADE 40/60 (W, K/H,SS) GALV. STEEL. APPLY PLATES TO EACH FACE OF TRUSS AND. UNLESS OTHERWISE LOCATED ON THIS DESIGN, POSITION PER DRAWINGS 160A-1. ANY INSPECTION OF PLATES FOLLOWED BY (i) SHALL BE PER ANNEX A3 OF TPI1-2002 SEC.3. A SEAL ON THIS DRAWING INDICATES ACCEPTANCE OF PROFESSIONAL ENGINEERING RESPONSIBILITY SOLELY FOR THE TRUSS COMPONENT DESIGN SHOWN. THE SUITABILITY AND USE OF THIS COMPONENT FOR ANY BUILDING IS THE RESPONSIBILITY OF THE BUILDING DESIGNER PER ANSI/TPI 1 SEC. 2.

DOUGLAS FLEMING LICENSE No. 66648 STATE OF FLORIDA PROFESSIONAL ENGINEER
11/03/2010

TC LL	20.0 PSF	REF	R2327- 61414
TC DL	7.0 PSF	DATE	11/03/10
BC DL	10.0 PSF	DRW	HCUSR2327 10307126
BC LL	0.0 PSF	HC-ENG	SSB/DF
TOT.LD.	37.0 PSF	SEQN-	338176
DUR.FAC.	1.25	FROM	JRG
SPACING	24.0"	JREF-	1U6L2327Z10

THIS DWG PREPARED FROM COMPUTER INPUT (LOADS & DIMENSIONS) SUBMITTED BY TRUSS MFR.

(10700-HOUSE ACCT. BAGGETT RES - SJ3D)

Top chord 2x4 SP #2 Dense
Bot chord 2x4 SP #2 Dense
Webs 2x4 SP #3

Left end vertical not exposed to wind pressure.

In lieu of rigid ceiling use purlins to brace BC @ 24" OC.

Deflection meets L/360 live and L/240 total load.

120 mph wind, 15.00 ft mean hgt, ASCE 7-05, CLOSED bldg, not located within 4.50 ft from roof edge, CAT II, EXP B, wind TC DL=4.2 psf, wind BC DL=5.0 psf. Iw=1.00 GCpi(+/-)=0.18

Wind reactions based on MWFRS pressures.

Bottom chord checked for 10.00 psf non-concurrent live load.

MWFRS loads based on trusses located at least 7.50 ft. from roof edge.

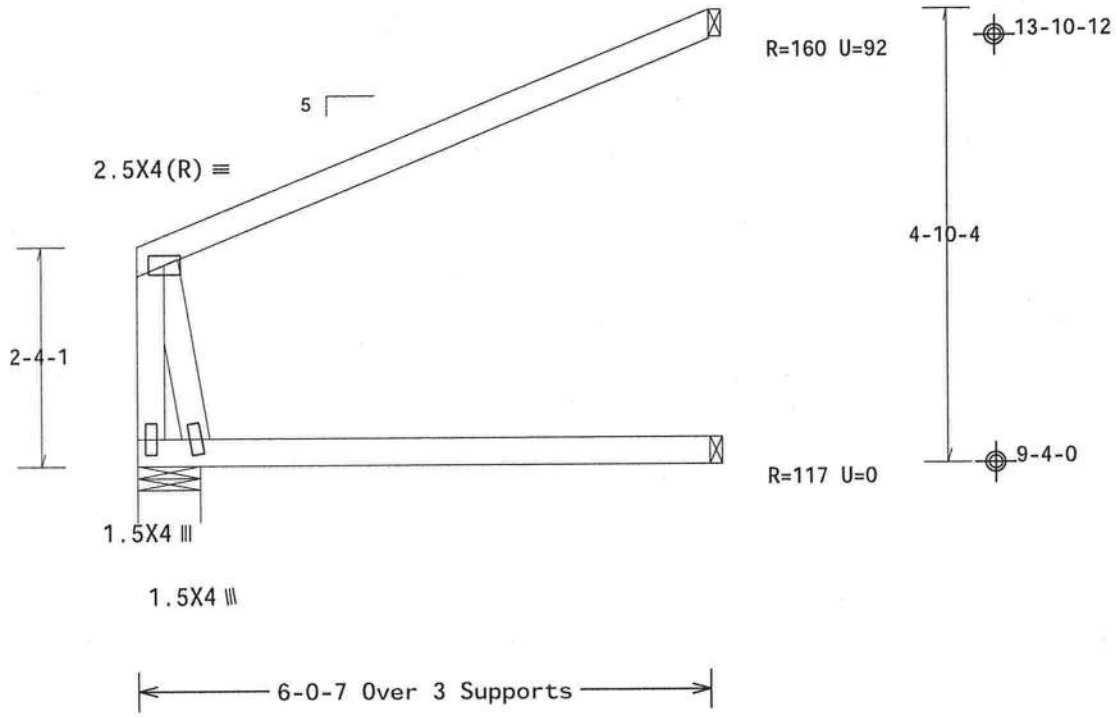

Design Crit: FBC2007Res/TPI-2002(STD)
FT/RT=20%(0%)/10(0)

PLT TYP. Wave

9.02.02.0210.16 QTY 4 FL/-/2/-/-/R/- Scale =.5"/Ft.

WARNING TRUSSES REQUIRE EXTREME CARE IN FABRICATION, HANDLING, SHIPPING, INSTALLING AND BRACING. REFER TO BCSI (BUILDING COMPONENT SAFETY INFORMATION). PUBLISHED BY TPI (TRUSS PLATE INSTITUTE, 218 NORTH LEE STREET, SUITE 312, ALEXANDRIA, VA. 22314) AND WTCA (WOOD TRUSS COUNCIL OF AMERICA, 6300 ENTERPRISE LANE, MADISON, WI 53719) FOR SAFETY PRACTICES PRIOR TO PERFORMING THESE FUNCTIONS. UNLESS OTHERWISE INDICATED TOP CHORD SHALL HAVE PROPERLY ATTACHED STRUCTURAL PANELS AND BOTTOM CHORD SHALL HAVE A PROPERLY ATTACHED RIGID CEILING.

IMPORTANTFURNISH A COPY OF THIS DESIGN TO THE INSTALLATION CONTRACTOR. ITW BCG, INC. SHALL NOT BE RESPONSIBLE FOR ANY DEVIATION FROM THIS DESIGN; ANY FAILURE TO BUILD THE TRUSS IN COMFORMANCE WITH TPI; OR FABRICATING, HANDLING, SHIPPING, INSTALLING & BRACING OF TRUSSES. DESIGN CONFORMS WITH APPLICABLE PROVISIONS OF NDS (NATIONAL DESIGN SPEC. BY AF&PA) AND TPI. IT'S BCG CONNECTOR PLATES ARE MADE OF 20/18/16GA (W,H/SS/K) ASTM A653 GRADE 40/60 (W, K/H,SS) GALV. STEEL. APPLY PLATES TO EACH FACE OF TRUSS AND. UNLESS OTHERWISE LOCATED ON THIS DESIGN, POSITION PER DRAWINGS 160 & 2. ANY INSPECTION OF PLATES FOLLOWED BY (i) SHALL BE PER ANNEX A3 OF TPI1-2002 SEC.3. A SEAL ON THIS DRAWING INDICATES ACCEPTANCE OF PROFESSIONAL ENGINEERING RESPONSIBILITY SOLELY FOR THE TRUSS COMPONENT DESIGN SHOWN. THE SUITABILITY AND USE OF THIS COMPONENT FOR ANY BUILDING IS THE RESPONSIBILITY OF THE BUILDING DESIGNER PER ANSI/TPI 1 SEC. 2.

ALPINE
ITW Building Components Group Inc.
Haines City, FL 33844
FL COA #0 278

DOUGLAS FLEMING LICENSE No. 66648 STATE OF FLORIDA PROFESSIONAL ENGINEER

11/03/2010

TC LL	20.0 PSF	REF	R2327- 61415
TC DL	7.0 PSF	DATE	11/03/10
BC DL	10.0 PSF	DRW	HCUSR2327 10307127
BC LL	0.0 PSF	HC-ENG	SSB/DF
TOT.LD.	37.0 PSF	SEQN-	338185
DUR.FAC.	1.25	FROM	JRG
SPACING	24.0"	JREF-	1U6L2327Z10

(10700-HOUSE ACCT. BAGGETT RES - SJ1D)

Top chord 2x4 SP #2 Dense
Bot chord 2x4 SP #2 Dense
Webs 2x4 SP #3

Left end vertical not exposed to wind pressure.

In lieu of rigid ceiling use purlins to brace BC @ 24" OC.

Deflection meets L/360 live and L/240 total load.

120 mph wind, 15.00 ft mean hgt, ASCE 7-05, CLOSED bldg, Located anywhere in roof, CAT II, EXP B, wind TC DL=4.2 psf, wind BC DL=5.0 psf. Iw=1.00 GCpi(+/-)=0.18

Wind reactions based on MWFRS pressures.

Bottom chord checked for 10.00 psf non-concurrent live load.

MWFRS loads based on trusses located at least 7.50 ft. from roof edge.

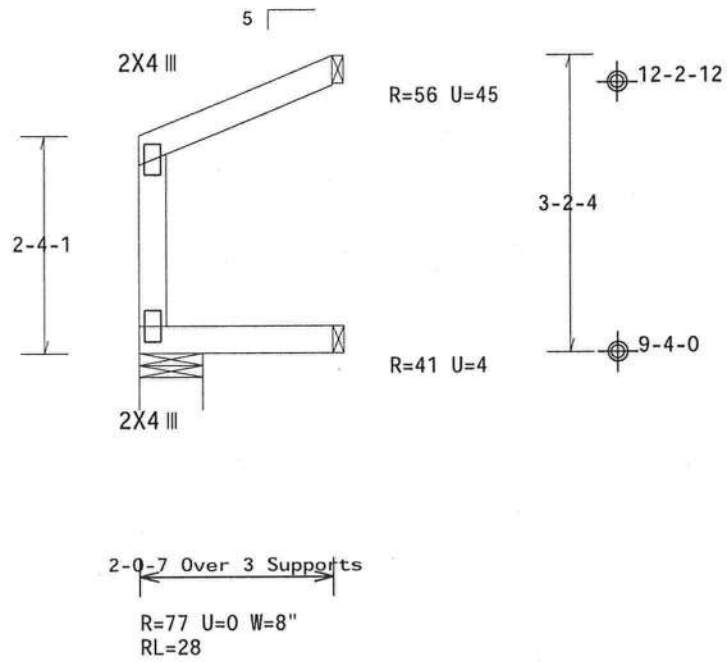

Design Crit: FBC2007Res/TPI-2002(STD)

PLT TYP. Wave

FT/RT=20%(0%)/10(0) 9.01.02.0210.16 QTY:

FL/-/2/-/-/R/- Scale =.5"/Ft.

TC LL	20.0 PSF	REF	R2327- 61416
TC DL	7.0 PSF	DATE	11/03/10
BC DL	10.0 PSF	DRW	HCUSR2327 10307128
BC LL	0.0 PSF	HC-ENG	SSB/DF
TOT.LD.	37.0 PSF	SEQN-	338191
DUR.FAC.	1.25	FROM	JRG
SPACING	24.0"	JREF-	1U6L2327Z10

ALPINE
ITW Building Components Group Inc.
Haines City, FL 33844
FL COA #0 278

WARNING TRUSSES REQUIRE EXTREME CARE IN FABRICATION, HANDLING, SHIPPING, INSTALLING AND BRACING. REFER TO BCSI (BUILDING COMPONENT SAFETY INFORMATION), PUBLISHED BY TPI (TRUSS PLATE INSTITUTE, 218 NORTH LEE STREET, SUITE 312, ALEXANDRIA, VA, 22314) AND WTCA (WOOD TRUSS COUNCIL OF AMERICA, 6300 ENTERPRISE LANE, MADISON, WI 53719) FOR SAFETY PRACTICES PRIOR TO PERFORMING THESE FUNCTIONS. UNLESS OTHERWISE INDICATED TOP CHORD SHALL HAVE PROPERLY ATTACHED STRUCTURAL PANELS AND BOTTOM CHORD SHALL HAVE A PROPERLY ATTACHED RIGID CEILING.

IMPORTANTFURNISH A COPY OF THIS DESIGN TO THE INSTALLATION CONTRACTOR. ITW BCG, INC. SHALL NOT BE RESPONSIBLE FOR ANY DEVIATION FROM THIS DESIGN; ANY FAILURE TO BUILD THE TRUSS IN COMFORMANCE WITH TPI; OR FABRICATING, HANDLING, SHIPPING, INSTALLING & BRACING OF TRUSSES. DESIGN CONFORMS WITH APPLICABLE PROVISIONS OF NDS (NATIONAL DESIGN SPEC. BY AF&PA) AND TPI. ITW BCG CONNECTOR PLATES ARE MADE OF 20/18/16GA (W,H/SS/K) ASTM A653 GRADE 40/60 (W, K/H,SS) GALV. STEEL. APPLY PLATES TO EACH FACE OF TRUSS AND, UNLESS OTHERWISE LOCATED ON THIS DESIGN, POSITION PER DRAWINGS 160A-2. ANY INSPECTION OF PLATES FOLLOWED BY (1) SHALL BE PER ANNEX A3 OF TPI1-2002 SEC.3. A SEAL ON THIS DRAWING INDICATES ACCEPTANCE OF PROFESSIONAL ENGINEERING RESPONSIBILITY SOLELY FOR THE TRUSS COMPONENT DESIGN SHOWN. THE SUITABILITY AND USE OF THIS COMPONENT FOR ANY BUILDING IS THE RESPONSIBILITY OF THE BUILDING DESIGNER PER ANSI/TPI 1 SEC. 2.

DOUGLAS FLEMING LICENSE No. 66648 STATE OF FLORIDA PROFESSIONAL ENGINEER

11/03/2010

THIS DWG PREPARED FROM COMPUTER INPUT (LOADS & DIMENSIONS) SUBMITTED BY TRUSS MFR.

(10700-HOUSE ACCT. BAGGETT RES - EJ11E)

Top chord 2x4 SP #2 Dense
Bot chord 2x4 SP #2 Dense
Webs 2x4 SP #3

In lieu of rigid ceiling use purlins to brace BC @ 24" OC.

Bottom chord checked for 10.00 psf non-concurrent live load.

MWFRS loads based on trusses located at least 15.00 ft. from roof edge.

120 mph wind, 15.00 ft mean hgt, ASCE 7-05, CLOSED bldg, not located within 4.50 ft from roof edge, CAT II, EXP B, wind TC DL=4.2 psf, wind BC DL=5.0 psf. Iw=1.00 GCpi(+/-)=0.18

Wind reactions based on MWFRS pressures.

Deflection meets L/360 live and L/240 total load.

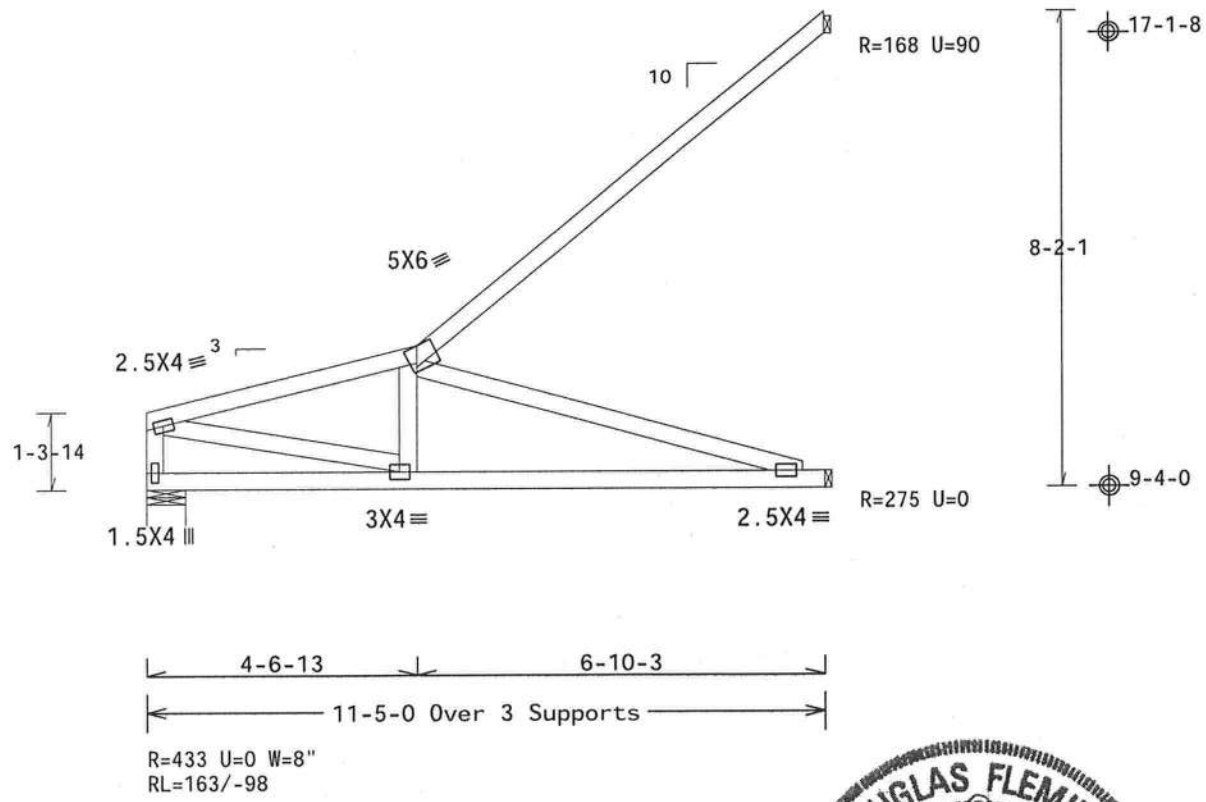

Design Crit: FBC2007Res/TPI-2002(STD)
FT/RT=20%(0%)/10(0)

PLT TYP. Wave

9.01.02.0210.16 QTY 11 FL/-/2/-/-/R/- Scale =.3125"/Ft.

WARNING TRUSSES REQUIRE EXTREME CARE IN FABRICATION, HANDLING, SHIPPING, INSTALLING AND BRACING. REFER TO BCSI (BUILDING COMPONENT SAFETY INFORMATION), PUBLISHED BY TPI (TRUSS PLATE INSTITUTE, 218 NORTH LEE STREET, SUITE 312, ALEXANDRIA, VA, 22314) AND WTCA (WOOD TRUSS COUNCIL OF AMERICA, 6300 ENTERPRISE LANE, MADISON, WI 53719) FOR SAFETY PRACTICES PRIOR TO PERFORMING THESE FUNCTIONS. UNLESS OTHERWISE INDICATED TOP CHORD SHALL HAVE PROPERLY ATTACHED STRUCTURAL PANELS AND BOTTOM CHORD SHALL HAVE A PROPERLY ATTACHED RIGID CEILING.

IMPORTANTFURNISH A COPY OF THIS DESIGN TO THE INSTALLATION CONTRACTOR. ITW BCG, INC. SHALL NOT BE RESPONSIBLE FOR ANY DEVIATION FROM THIS DESIGN; ANY FAILURE TO BUILD THE TRUSS IN COMFORMANCE WITH TPI; OR FABRICATING, HANDLING, SHIPPING, INSTALLING & BRACING OF TRUSSES. DESIGN CONFORMS WITH APPLICABLE PROVISIONS OF NDS (NATIONAL DESIGN SPEC, BY AF&PA) AND TPI. ITW BCG CONNECTOR PLATES ARE MADE OF 20/18/16GA (W,H/SS/K) ASTM A653 GRADE 40/60 (W, K/H,SS) GALV. STEEL. APPLY PLATES TO EACH FACE OF TRUSS AND, UNLESS OTHERWISE LOCATED ON THIS DESIGN, POSITION PER DRAWINGS 160A. ANY INSPECTION OF PLATES FOLLOWED BY (i) SHALL BE PER ANNEX A3 OF TPI1-2002 SEC.3. A SEAL ON THIS DRAWING INDICATES ACCEPTANCE OF PROFESSIONAL ENGINEERING RESPONSIBILITY SOLELY FOR THE TRUSS COMPONENT DESIGN SHOWN. THE SUITABILITY AND USE OF THIS COMPONENT FOR ANY BUILDING IS THE RESPONSIBILITY OF THE BUILDING DESIGNER PER ANSI/TPI 1 SEC. 2.

ALPINE
ITW Building Components Group Inc.
Haines City, FL 33844
FL COA #0 278

DOUGLAS FLEMING LICENSE No. 66648 STATE OF FLORIDA PROFESSIONAL ENGINEER

11/03/2010

TC LL	20.0 PSF	REF	R2327- 61417
TC DL	7.0 PSF	DATE	11/03/10
BC DL	10.0 PSF	DRW	HCUSR2327 10307146
BC LL	0.0 PSF	HC-ENG	SSB/DF
TOT.LD.	37.0 PSF	SEQN-	338223
DUR.FAC.	1.25	FROM	JRG
SPACING	24.0"	JREF-	1U6L2327Z10

(10700-HOUSE ACCT. BAGGETT RES - SJ10E)

Top chord 2x4 SP #2 Dense
Bot chord 2x4 SP #2 Dense
Webs 2x4 SP #3

Calculated horizontal deflection is 0.30" due to live load and 0.28" due to dead load.

In lieu of rigid ceiling use purlins to brace BC @ 24" OC.

Bottom chord checked for 10.00 psf non-concurrent live load.

MWFRS loads based on trusses located at least 15.00 ft. from roof edge.

(**) 1 plate(s) require special positioning. Refer to scaled plate plot details for special positioning requirements.

120 mph wind, 15.00 ft mean hgt, ASCE 7-05, CLOSED bldg, not located within 4.50 ft from roof edge, CAT II, EXP B, wind TC DL=4.2 psf, wind BC DL=5.0 psf. Iw=1.00 GCpi(+/-)=0.18

Wind reactions based on MWFRS pressures.

Deflection meets L/360 live and L/240 total load.

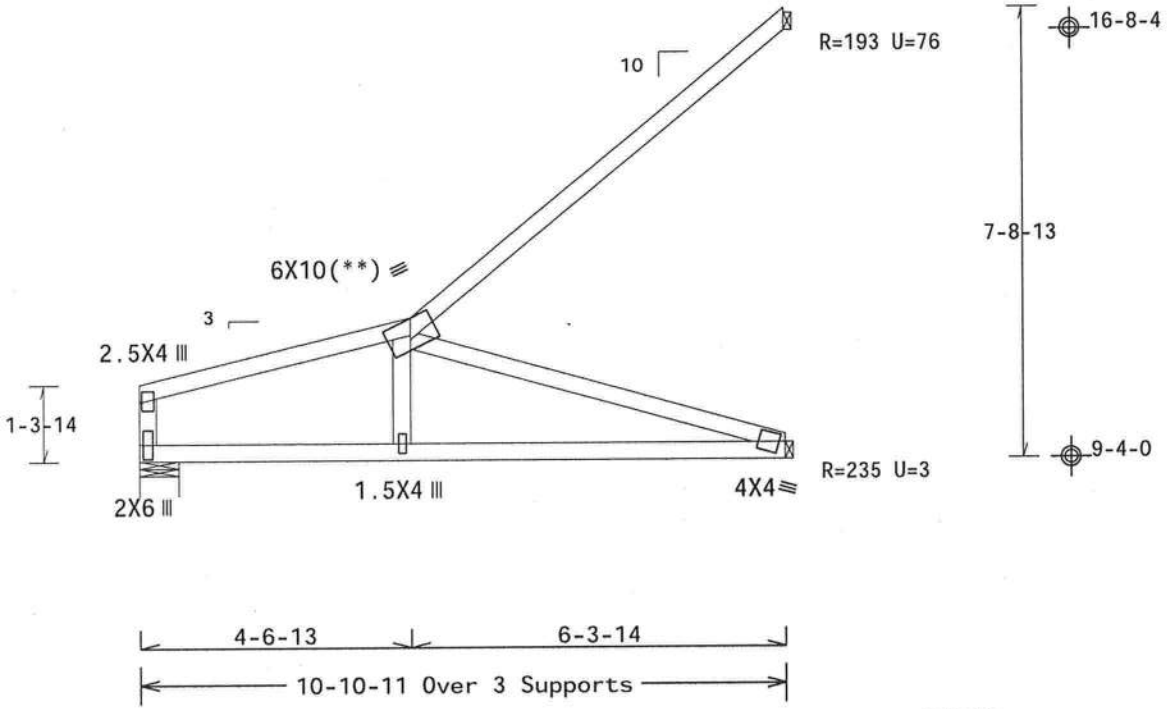

Design Crit: FBC2007Res/TPI-2002(STD)
FT/RT=20%(0%)/10(0)

PLT TYP. Wave | 10.02.01.0923.23 | QTY 1 | FL/-/2/-/-/R/- | Scale =.3125"/Ft.

ALPINE
ITW Building Components Group Inc.
Haines City, FL 33844
FL COA #0 278

WARNING TRUSSES REQUIRE EXTREME CARE IN FABRICATION, HANDLING, SHIPPING, INSTALLING AND BRACING. REFER TO BCSI (BUILDING COMPONENT SAFETY INFORMATION), PUBLISHED BY TPI (TRUSS PLATE INSTITUTE, 218 NORTH LEE STREET, SUITE 312, ALEXANDRIA, VA, 22314) AND WTCA (WOOD TRUSS COUNCIL OF AMERICA, 6300 ENTERPRISE LANE, MADISON, WI 53719) FOR SAFETY PRACTICES PRIOR TO PERFORMING THESE FUNCTIONS. UNLESS OTHERWISE INDICATED TOP CHORD SHALL HAVE PROPERLY ATTACHED STRUCTURAL PANELS AND BOTTOM CHORD SHALL HAVE A PROPERLY ATTACHED RIGID CEILING.

IMPORTANT FURNISH A COPY OF THIS DESIGN TO THE INSTALLATION CONTRACTOR. ITW BCG, INC. SHALL NOT BE RESPONSIBLE FOR ANY DEVIATION FROM THIS DESIGN; ANY FAILURE TO BUILD THE TRUSS IN CONFORMANCE WITH TPI; OR FABRICATING, HANDLING, SHIPPING, INSTALLING & BRACING OF TRUSSES. DESIGN CONFORMS WITH APPLICABLE PROVISIONS OF NDS (NATIONAL DESIGN SPEC. BY AF&PA) AND TPI. ITW BCG CONNECTOR PLATES ARE MADE OF 20/18/16GA (W,H/SS/K) ASTM A653 GRADE 40/60 (W, K/H,SS) GALV. STEEL. APPLY PLATES TO EACH FACE OF TRUSS AND, UNLESS OTHERWISE LOCATED ON THIS DESIGN, POSITION PER DRAWINGS 160A. ANY INSPECTION OF PLATES FOLLOWED BY (i) SHALL BE PER ANNEX A3 OF TPI1-2002 SEC.3. A SEAL ON THIS DRAWING INDICATES ACCEPTANCE OF PROFESSIONAL ENGINEERING RESPONSIBILITY SOLELY FOR THE TRUSS COMPONENT DESIGN SHOWN. THE SUITABILITY AND USE OF THIS COMPONENT FOR ANY BUILDING IS THE RESPONSIBILITY OF THE BUILDING DESIGNER PER ANSI/TPI 1 SEC. 2.

DOUGLAS FLEMING LICENSE No. 66648 STATE OF FLORIDA PROFESSIONAL ENGINEER
11/03/2010

TC LL	20.0 PSF	REF	R2327- 61418
TC DL	7.0 PSF	DATE	11/03/10
BC DL	10.0 PSF	DRW	HCUSR2327 10307145
BC LL	0.0 PSF	HC-ENG	SSB/DF
TOT.LD.	37.0 PSF	SEQN-	4672 REV
DUR.FAC.	1.25	FROM	JRG
SPACING	24.0"	JREF-	1U6L2327Z10

(10700-HOUSE ACCT. BAGGETT RES - SJ9E)

Top chord 2x4 SP #2 Dense
Bot chord 2x4 SP #2 Dense
Webs 2x4 SP #3

In lieu of rigid ceiling use purlins to brace BC @ 24" OC.

Bottom chord checked for 10.00 psf non-concurrent live load.

Deflection meets L/360 live and L/240 total load.

(I) - plates so marked were sized using a Fabrication Tolerance of 0% and a Rotational Tolerance of 0 degrees.

120 mph wind, 15.00 ft mean hgt, ASCE 7-05, CLOSED bldg, not located within 4.50 ft from roof edge, CAT II, EXP B, wind TC DL=4.2 psf, wind BC DL=5.0 psf. Iw=1.00 GCpi(+/-)=0.18

Wind reactions based on MWFRS pressures.

MWFRS loads based on trusses located at least 7.50 ft. from roof edge.

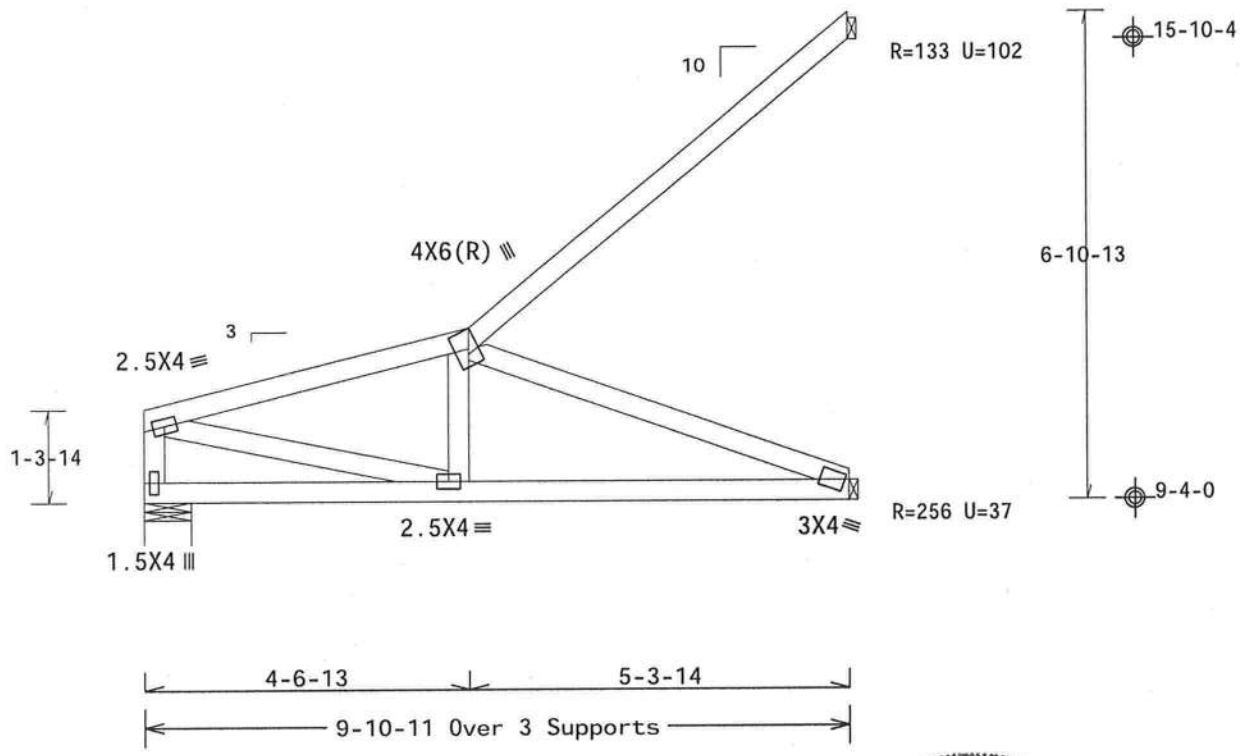

Design Crit: FBC2007Res/TPI-2002(STD)
FT/RT=20%(0%)/10(0)

PLT TYP. Wave

9.01.02.0210.16 QTY 1

FL/-/2/-/-/R/-

Scale =.375"/Ft.

ALPINE
ITW Building Components Group Inc.
Haines City, FL 33844
FL COA #0 278

WARNING TRUSSES REQUIRE EXTREME CARE IN FABRICATION, HANDLING, SHIPPING, INSTALLING AND BRACING. REFER TO BCSI (BUILDING COMPONENT SAFETY INFORMATION), PUBLISHED BY TPI (TRUSS PLATE INSTITUTE, 218 NORTH LEE STREET, SUITE 312, ALEXANDRIA, VA, 22314) AND WTCA (WOOD TRUSS COUNCIL OF AMERICA, 6300 ENTERPRISE LANE, MADISON, WI 53719) FOR SAFETY PRACTICES PRIOR TO PERFORMING THESE FUNCTIONS. UNLESS OTHERWISE INDICATED TOP CHORD SHALL HAVE PROPERLY ATTACHED STRUCTURAL PANELS AND BOTTOM CHORD SHALL HAVE A PROPERLY ATTACHED RIGID CEILING.

IMPORTANT FURNISH A COPY OF THIS DESIGN TO THE INSTALLATION CONTRACTOR. ITW BCG, INC. SHALL NOT BE RESPONSIBLE FOR ANY DEVIATION FROM THIS DESIGN; ANY FAILURE TO BUILD THE TRUSS IN CONFORMANCE WITH TPI; OR FABRICATING, HANDLING, SHIPPING, INSTALLING & BRACING OF TRUSSES. DESIGN CONFORMS WITH APPLICABLE PROVISIONS OF NDS (NATIONAL DESIGN SPEC, BY AF&PA) AND TPI. ITW BCG CONNECTOR PLATES ARE MADE OF 20/18/16GA (W,H/SS/K) ASTM A653 GRADE 40/60 (W, K/H,SS) GALV. STEEL. APPLY PLATES TO EACH FACE OF TRUSS AND, UNLESS OTHERWISE LOCATED ON THIS DESIGN, POSITION PER DRAWINGS 160/161. ANY INSPECTION OF PLATES FOLLOWED BY (i) SHALL BE PER ANNEX A3 OF TPI1-2002 SEC.3. A SEAL ON THIS DRAWING INDICATES ACCEPTANCE OF PROFESSIONAL ENGINEERING RESPONSIBILITY SOLELY FOR THE TRUSS COMPONENT DESIGN SHOWN. THE SUITABILITY AND USE OF THIS COMPONENT FOR ANY BUILDING IS THE RESPONSIBILITY OF THE BUILDING DESIGNER PER ANSI/TPI 1 SEC. 2.

DOUGLAS FLEMING LICENSE No. 66648 STATE OF FLORIDA PROFESSIONAL ENGINEER

11/03/2010

TC LL	20.0 PSF	REF	R2327- 61419
TC DL	7.0 PSF	DATE	11/03/10
BC DL	10.0 PSF	DRW	HCUSR2327 10307144
BC LL	0.0 PSF	HC-ENG	SSB/DF
TOT.LD.	37.0 PSF	SEQN-	338263
DUR.FAC.	1.25	FROM	JRG
SPACING	24.0"	JREF-	1U6L2327Z10

THIS DWG PREPARED FROM COMPUTER INPUT (LOADS & DIMENSIONS) SUBMITTED BY TRUSS MFR.

(10700-HOUSE ACCT. BAGGETT RES - SJ8E)

Top chord 2x4 SP #2 Dense
Bot chord 2x4 SP #2 Dense
Webs 2x4 SP #3

In lieu of rigid ceiling use purlins to brace BC @ 24" OC.

Bottom chord checked for 10.00 psf non-concurrent live load.

120 mph wind, 15.00 ft mean hgt, ASCE 7-05, CLOSED bldg, not located within 4.50 ft from roof edge, CAT II, EXP B, wind TC DL=4.2 psf, wind BC DL=5.0 psf. Iw=1.00 GCpi(+/-)=0.18

Wind reactions based on MWFRS pressures.

Deflection meets L/360 live and L/240 total load.

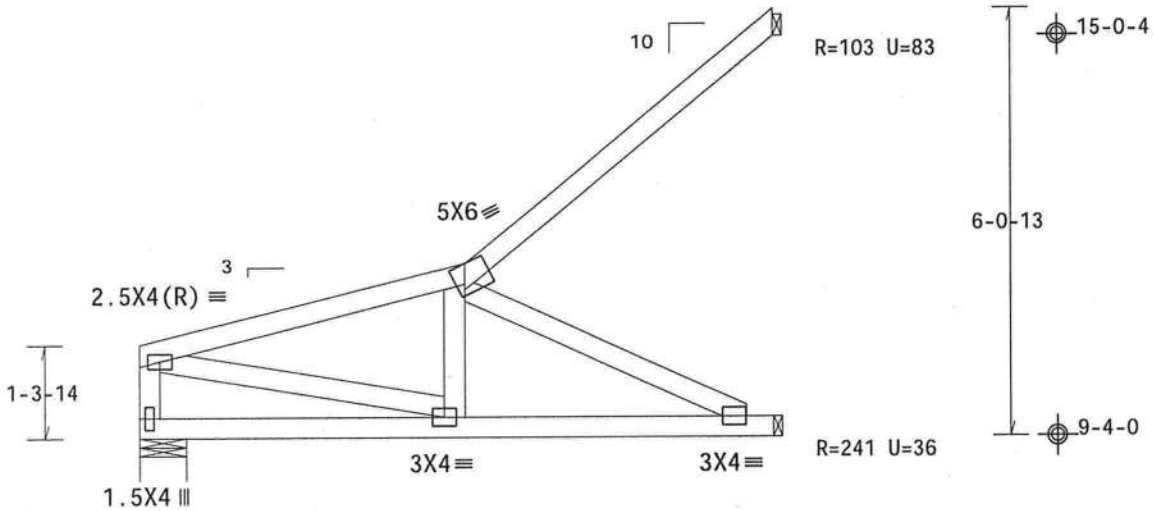

R=335 U=3 W=8"
RL=159/-62

Design Crit: FBC2007Res/TPI-2002(STD)
FT/RT=20%(0%)/10(0)

PLT TYP. Wave

09.01.02.0210.16 QTY:

FL/-/2/-/-/R/-

Scale =.375"/Ft.

ALPINE
ITW Building Components Group Inc.
Haines City, FL 33844
FL COA #0 278

WARNING TRUSSES REQUIRE EXTREME CARE IN FABRICATION, HANDLING, SHIPPING, INSTALLING AND BRACING. REFER TO BCSI (BUILDING COMPONENT SAFETY INFORMATION), PUBLISHED BY TPI (TRUSS PLATE INSTITUTE, 218 NORTH LEE STREET, SUITE 312, ALEXANDRIA, VA, 22314) AND WTCA (WOOD TRUSS COUNCIL OF AMERICA, 6300 ENTERPRISE LANE, MADISON, WI 53719) FOR SAFETY PRACTICES PRIOR TO PERFORMING THESE FUNCTIONS. UNLESS OTHERWISE INDICATED TOP CHORD SHALL HAVE PROPERLY ATTACHED STRUCTURAL PANELS AND BOTTOM CHORD SHALL HAVE A PROPERLY ATTACHED RIGID CEILING.

IMPORTANT FURNISH A COPY OF THIS DESIGN TO THE INSTALLATION CONTRACTOR. ITW BCG, INC. SHALL NOT BE RESPONSIBLE FOR ANY DEVIATION FROM THIS DESIGN; ANY FAILURE TO BUILD THE TRUSS IN CONFORMANCE WITH TPI; OR FABRICATING, HANDLING, SHIPPING, INSTALLING & BRACING OF TRUSSES. DESIGN CONFORMS WITH APPLICABLE PROVISIONS OF NDS (NATIONAL DESIGN SPEC. BY AF&PA) AND TPI. ITW BCG CONNECTOR PLATES ARE MADE OF 20/18/16GA (W,H/SS/K) ASTM A653 GRADE 40/60 (W, K/H,SS) GALV. STEEL. APPLY PLATES TO EACH FACE OF TRUSS AND, UNLESS OTHERWISE LOCATED ON THIS DESIGN, POSITION PER DRAWINGS 160A-Z. ANY INSPECTION OF PLATES FOLLOWED BY (i) SHALL BE PER ANNEX A3 OF TPI1-2002 SEC.3. A SEAL ON THIS DRAWING INDICATES ACCEPTANCE OF PROFESSIONAL ENGINEERING RESPONSIBILITY SOLELY FOR THE TRUSS COMPONENT DESIGN SHOWN. THE SUITABILITY AND USE OF THIS COMPONENT FOR ANY BUILDING IS THE RESPONSIBILITY OF THE BUILDING DESIGNER PER ANSI/TPI 1 SEC. 2.

DOUGLAS FLEMING LICENSE No. 66648 STATE OF FLORIDA PROFESSIONAL ENGINEER

11/03/2010

TC LL	20.0 PSF	REF	R2327- 61420
TC DL	7.0 PSF	DATE	11/03/10
BC DL	10.0 PSF	DRW	HCUSR2327 10307143
BC LL	0.0 PSF	HC-ENG	SSB/DF
TOT.LD.	37.0 PSF	SEQN-	338271
DUR.FAC.	1.25	FROM	JRG
SPACING	24.0"	JREF-	1U6L2327Z10

(10700-HOUSE ACCT. BAGGETT RES - SJ7E)

Top chord 2x4 SP #2 Dense
Bot chord 2x4 SP #2 Dense
Webs 2x4 SP #3

In lieu of rigid ceiling use purlins to brace BC @ 24" OC.

Bottom chord checked for 10.00 psf non-concurrent live load.

120 mph wind, 15.00 ft mean hgt, ASCE 7-05, CLOSED bldg, not located within 4.50 ft from roof edge, CAT II, EXP B, wind TC DL=4.2 psf, wind BC DL=5.0 psf. Iw=1.00 GCpi(+/-)=0.18

Wind reactions based on MWFRS pressures.

Deflection meets L/360 live and L/240 total load.

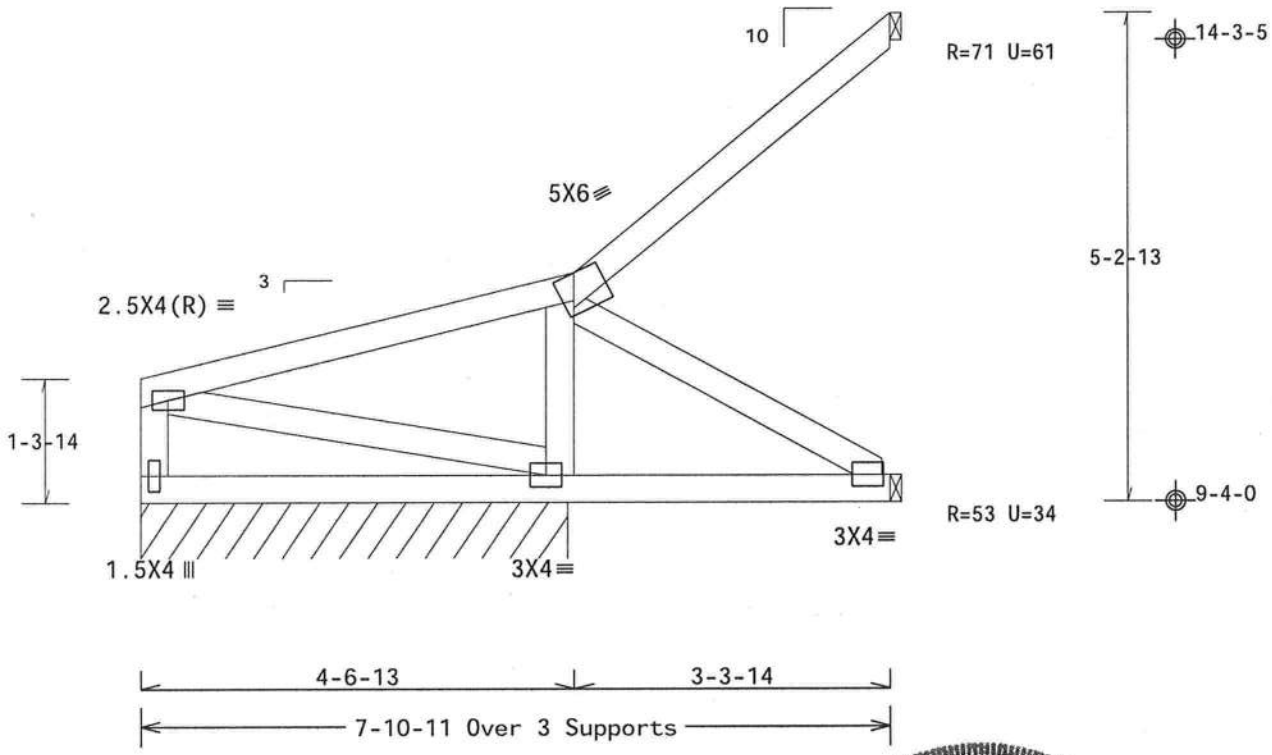

R=107 PLF U=3 PLF W=4-6-0
RL=29/-11 PLF

Design Crit: FBC2007Res/TPI-2002(STD)
FT/RT=20%(0%)/10(0)

PLT TYP. Wave | 09.01.02.0210.16 | QTY: 1 | FL/-/2/-/-/R/- | Scale =.5"/Ft.

DOUGLAS FLEMING LICENSE No. 66648 STATE OF FLORIDA PROFESSIONAL ENGINEER
11/03/2010

ALPINE
ITW Building Components Group Inc.
Haines City, FL 33844
FL COA #0 278

WARNING TRUSSES REQUIRE EXTREME CARE IN FABRICATION, HANDLING, SHIPPING, INSTALLING AND BRACING. REFER TO BCSI (BUILDING COMPONENT SAFETY INFORMATION), PUBLISHED BY TPI (TRUSS PLATE INSTITUTE, 218 NORTH LEE STREET, SUITE 312, ALEXANDRIA, VA, 22314) AND WTCA (WOOD TRUSS COUNCIL OF AMERICA, 6300 ENTERPRISE LANE, MADISON, WI 53719) FOR SAFETY PRACTICES PRIOR TO PERFORMING THESE FUNCTIONS. UNLESS OTHERWISE INDICATED TOP CHORD SHALL HAVE PROPERLY ATTACHED STRUCTURAL PANELS AND BOTTOM CHORD SHALL HAVE A PROPERLY ATTACHED RIGID CEILING.

IMPORTANT FURNISH A COPY OF THIS DESIGN TO THE INSTALLATION CONTRACTOR. ITW BCG, INC. SHALL NOT BE RESPONSIBLE FOR ANY DEVIATION FROM THIS DESIGN; ANY FAILURE TO BUILD THE TRUSS IN CONFORMANCE WITH TPI; OR FABRICATING, HANDLING, SHIPPING, INSTALLING & BRACING OF TRUSSES.
DESIGN CONFORMS WITH APPLICABLE PROVISIONS OF NDS (NATIONAL DESIGN SPEC. BY AF&PA) AND TPI. ITW BCG CONNECTOR PLATES ARE MADE OF 20/18/16GA (W,H/SS/K) ASTM A653 GRADE 40/60 (W, K/H,SS) GALV. STEEL. APPLY PLATES TO EACH FACE OF TRUSS AND, UNLESS OTHERWISE LOCATED ON THIS DESIGN, POSITION PER DRAWINGS 160A-Z. ANY INSPECTION OF PLATES FOLLOWED BY (i) SHALL BE PER ANNEX A3 OF TPI1-2002 SEC.3. A SEAL ON THIS DRAWING INDICATES ACCEPTANCE OF PROFESSIONAL ENGINEERING RESPONSIBILITY SOLELY FOR THE TRUSS COMPONENT DESIGN SHOWN. THE SUITABILITY AND USE OF THIS COMPONENT FOR ANY BUILDING IS THE RESPONSIBILITY OF THE BUILDING DESIGNER PER ANSI/TPI 1 SEC. 2.

TC LL	20.0 PSF	REF	R2327- 61421
TC DL	7.0 PSF	DATE	11/03/10
BC DL	10.0 PSF	DRW	HCUSR2327 10307142
BC LL	0.0 PSF	HC-ENG	SSB/DF
TOT.LD.	37.0 PSF	SEQN-	338275
DUR.FAC.	1.25	FROM	JRG
SPACING	24.0"	JREF-	1U6L2327Z10

THIS DWG PREPARED FROM COMPUTER INPUT (LOADS & DIMENSIONS) SUBMITTED BY TRUSS MFR.

(10700-HOUSE ACCT. BAGGETT RES - CJ7)

Top chord 2x4 SP #2 Dense
Bot chord 2x4 SP #2 Dense
Webs 2x4 SP #3

In lieu of rigid ceiling use purlins to brace BC @ 24" OC.

Hipjack supports 7-0-0 setback jacks with no webs.

120 mph wind, 15.00 ft mean hgt, ASCE 7-05, CLOSED bldg, Located anywhere in roof, CAT II, EXP B, wind TC DL=4.2 psf, wind BC DL=5.0 psf. Iw=1.00 GCpi(+/-)=0.18

Wind reactions based on MWFRS pressures.

Deflection meets L/360 live and L/240 total load.

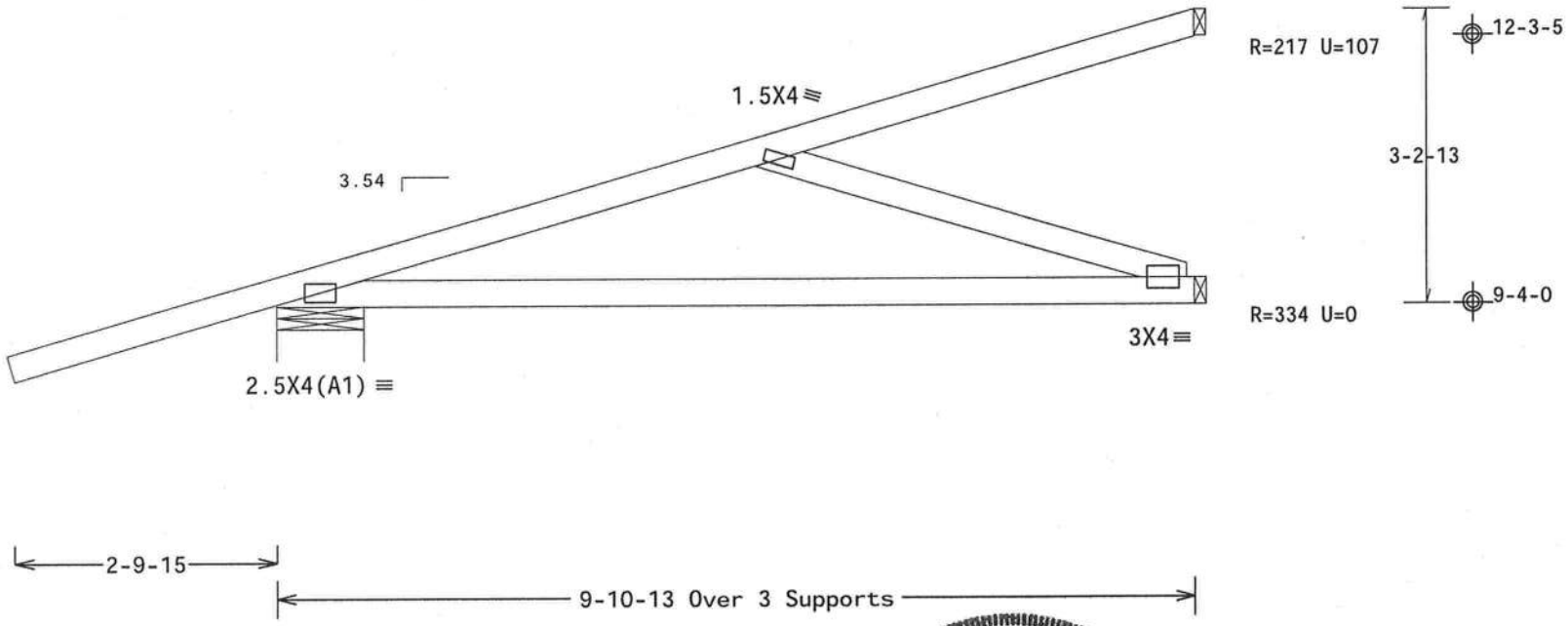

Design Crit: FBC2007Res/TPI-2002(STD)
FT/RT=20%(0%)/10(0)

PLT TYP. Wave

09.01.02.0210.16 QTY:4

FL/-/2/-/-/R/-

Scale =.5"/Ft.

DOUGLAS FLEMING LICENSE No. 66648 STATE OF FLORIDA PROFESSIONAL ENGINEER

ALPINE
ITW Building Components Group Inc.
Haines City, FL 33844
FL COA #0 278

WARNING TRUSSES REQUIRE EXTREME CARE IN FABRICATION, HANDLING, SHIPPING, INSTALLING AND BRACING. REFER TO BCSI (BUILDING COMPONENT SAFETY INFORMATION), PUBLISHED BY TPI (TRUSS PLATE INSTITUTE, 218 NORTH LEE STREET, SUITE 312, ALEXANDRIA, VA. 22314) AND WTCA (WOOD TRUSS COUNCIL OF AMERICA, 6300 ENTERPRISE LANE, MADISON, WI 53719) FOR SAFETY PRACTICES PRIOR TO PERFORMING THESE FUNCTIONS. UNLESS OTHERWISE INDICATED TOP CHORD SHALL HAVE PROPERLY ATTACHED STRUCTURAL PANELS AND BOTTOM CHORD SHALL HAVE A PROPERLY ATTACHED RIGID CEILING.

IMPORTANT FURNISH A COPY OF THIS DESIGN TO THE INSTALLATION CONTRACTOR. ITW BCG, INC. SHALL NOT BE RESPONSIBLE FOR ANY DEVIATION FROM THIS DESIGN; ANY FAILURE TO BUILD THE TRUSS IN CONFORMANCE WITH TPI; OR FABRICATING, HANDLING, SHIPPING, INSTALLING & BRACING OF TRUSSES. DESIGN CONFORMS WITH APPLICABLE PROVISIONS OF NDS (NATIONAL DESIGN SPEC. BY AF&PA) AND TPI. ITW BCG CONNECTOR PLATES ARE MADE OF 20/18/16GA (W,H/SS/K) ASTM A653 GRADE 40/60 (W, K/H,SS) GALV. STEEL. APPLY PLATES TO EACH FACE OF TRUSS AND, UNLESS OTHERWISE LOCATED ON THIS DESIGN, POSITION PER DRAWINGS 160A-Z. ANY INSPECTION OF PLATES FOLLOWED BY (i) SHALL BE PER ANNEX A3 OF TPI1-2002 SEC.3. A SEAL ON THIS DRAWING INDICATES ACCEPTANCE OF PROFESSIONAL ENGINEERING RESPONSIBILITY SOLELY FOR THE TRUSS COMPONENT DESIGN SHOWN. THE SUITABILITY AND USE OF THIS COMPONENT FOR ANY BUILDING IS THE RESPONSIBILITY OF THE BUILDING DESIGNER PER ANSI/TPI 1 SEC. 2.

11/03/2010

TC LL	20.0 PSF	REF	R2327- 61422
TC DL	7.0 PSF	DATE	11/03/10
BC DL	10.0 PSF	DRW	HCUSR2327 10307121
BC LL	0.0 PSF	HC-ENG	SSB/DF
TOT.LD.	37.0 PSF	SEQN-	338054
DUR.FAC.	1.25	FROM	JRG
SPACING	24.0"	JREF-	1U6L2327Z10

THIS DWG PREPARED FROM COMPUTER INPUT (LOADS & DIMENSIONS) SUBMITTED BY TRUSS MFR.

(10700-HOUSE ACCT. BAGGETT RES - CJ7A)

Top chord 2x4 SP #2 Dense
Bot chord 2x4 SP #2 Dense
Webs 2x4 SP #3

Left end vertical not exposed to wind pressure.

In lieu of rigid ceiling use purlins to brace BC @ 24" OC.

Deflection meets L/360 live and L/240 total load.

120 mph wind, 15.00 ft mean hgt, ASCE 7-05, CLOSED bldg, Located anywhere in roof, CAT II, EXP B, wind TC DL=4.2 psf, wind BC DL=5.0 psf. Iw=1.00 GCpi(+/-)=0.18

Wind reactions based on MWFRS pressures.

Hipjack supports 7-0-0 setback jacks with no webs.

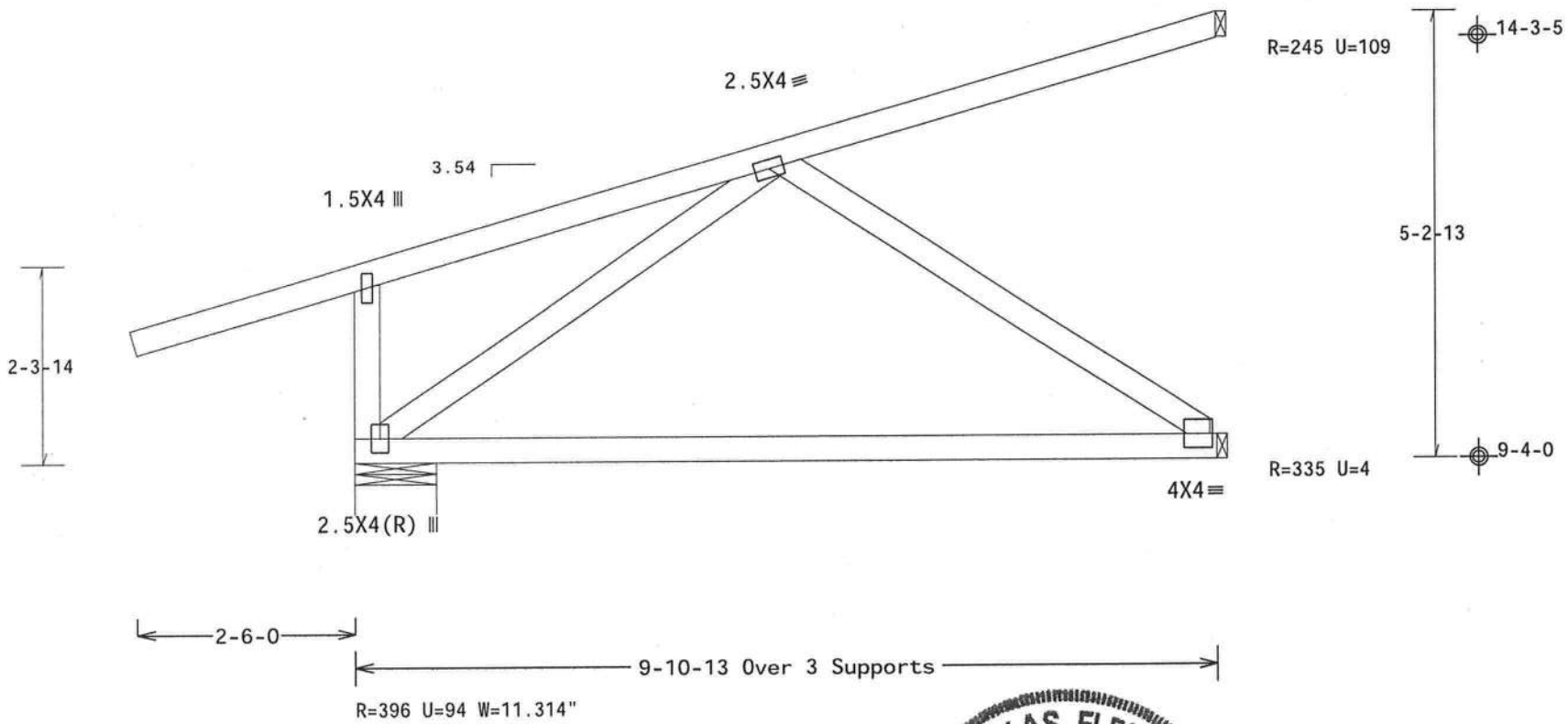

Design Crit: FBC2007Res/TPI-2002(STD)
FT/RT=20%(0%)/10(0)

PLT TYP. Wave

9.01.02.0210.16 QTY 2

FL/-/2/-/-/R/-

Scale =.5"/Ft.

ALPINE
ITW Building Components Group Inc.
Haines City, FL 33844
FL COA #0 278

WARNING TRUSSES REQUIRE EXTREME CARE IN FABRICATION, HANDLING, SHIPPING, INSTALLING AND BRACING. REFER TO BCSI (BUILDING COMPONENT SAFETY INFORMATION), PUBLISHED BY TPI (TRUSS PLATE INSTITUTE, 218 NORTH LEE STREET, SUITE 312, ALEXANDRIA, VA, 22314) AND WTCA (WOOD TRUSS COUNCIL OF AMERICA, 6300 ENTERPRISE LANE, MADISON, WI 53719) FOR SAFETY PRACTICES PRIOR TO PERFORMING THESE FUNCTIONS. UNLESS OTHERWISE INDICATED TOP CHORD SHALL HAVE PROPERLY ATTACHED STRUCTURAL PANELS AND BOTTOM CHORD SHALL HAVE A PROPERLY ATTACHED RIGID CEILING.

IMPORTANT FURNISH A COPY OF THIS DESIGN TO THE INSTALLATION CONTRACTOR. ITW BCG, INC. SHALL NOT BE RESPONSIBLE FOR ANY DEVIATION FROM THIS DESIGN; ANY FAILURE TO BUILD THE TRUSS IN CONFORMANCE WITH TPI; OR FABRICATING, HANDLING, SHIPPING, INSTALLING & BRACING OF TRUSSES. DESIGN CONFORMS WITH APPLICABLE PROVISIONS OF NDS (NATIONAL DESIGN SPEC, BY AF&PA) AND TPI. ITW BCG CONNECTOR PLATES ARE MADE OF 20/18/16GA (W,H/SS/K) ASTM A653 GRADE 40/60 (W, K/H,SS) GALV. STEEL. APPLY PLATES TO EACH FACE OF TRUSS AND, UNLESS OTHERWISE LOCATED ON THIS DESIGN, POSITION PER DRAWINGS 160A. ANY INSPECTION OF PLATES FOLLOWED BY (i) SHALL BE PER ANNEX A3 OF TPI1-2002 SEC.3. A SEAL ON THIS DRAWING INDICATES ACCEPTANCE OF PROFESSIONAL ENGINEERING RESPONSIBILITY SOLELY FOR THE TRUSS COMPONENT DESIGN SHOWN. THE SUITABILITY AND USE OF THIS COMPONENT FOR ANY BUILDING IS THE RESPONSIBILITY OF THE BUILDING DESIGNER PER ANSI/TPI 1 SEC. 2.

DOUGLAS FLEMING LICENSE No. 66648 STATE OF FLORIDA PROFESSIONAL ENGINEER

11/03/2010

TC LL	20.0 PSF	REF	R2327- 61423
TC DL	7.0 PSF	DATE	11/03/10
BC DL	10.0 PSF	DRW	HCUSR2327 10307151
BC LL	0.0 PSF	HC-ENG	SSB/DF
TOT.LD.	37.0 PSF	SEQN-	338310
DUR.FAC.	1.25	FROM	JRG
SPACING	24.0"	JREF-	1U6L2327Z10

(10700-HOUSE ACCT. BAGGETT RES - CJ7B)

Top chord 2x4 SP #2 Dense
Bot chord 2x4 SP #2 Dense
Webs 2x4 SP #3

In lieu of rigid ceiling use purlins to brace BC @ 24" OC.

Hipjack supports 7-0-0 setback jacks with no webs.

120 mph wind, 15.00 ft mean hgt, ASCE 7-05, CLOSED bldg, Located anywhere in roof, CAT II, EXP B, wind TC DL=4.2 psf, wind BC DL=5.0 psf. Iw=1.00 GCpi(+/-)=0.18

Wind reactions based on MWFRS pressures.

Deflection meets L/360 live and L/240 total load.

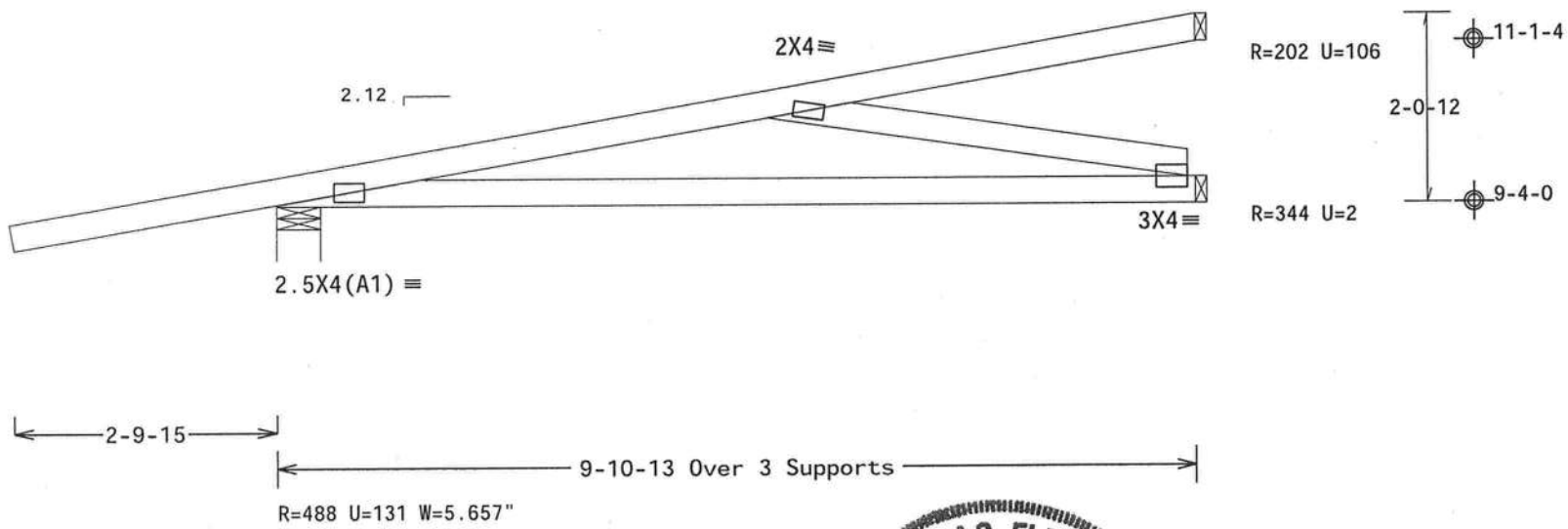

Design Crit: FBC2007Res/TPI-2002(STD)
FT/RT=20%(0%)/10(0)

PLT TYP. Wave | 9.02.02.0210.16 | QTY 2 | FL/-/2/-/-/R/- | Scale =.5"/Ft.

ALPINE
ITW Building Components Group Inc.
Haines City, FL 33844
FL COA #0 278

WARNING TRUSSES REQUIRE EXTREME CARE IN FABRICATION, HANDLING, SHIPPING, INSTALLING AND BRACING. REFER TO BCSI (BUILDING COMPONENT SAFETY INFORMATION), PUBLISHED BY TPI (TRUSS PLATE INSTITUTE, 218 NORTH LEE STREET, SUITE 312, ALEXANDRIA, VA, 22314) AND WTCA (WOOD TRUSS COUNCIL OF AMERICA, 6300 ENTERPRISE LANE, MADISON, WI 53719) FOR SAFETY PRACTICES PRIOR TO PERFORMING THESE FUNCTIONS. UNLESS OTHERWISE INDICATED TOP CHORD SHALL HAVE PROPERLY ATTACHED STRUCTURAL PANELS AND BOTTOM CHORD SHALL HAVE A PROPERLY ATTACHED RIGID CEILING.

IMPORTANT FURNISH A COPY OF THIS DESIGN TO THE INSTALLATION CONTRACTOR. ITW BCG, INC. SHALL NOT BE RESPONSIBLE FOR ANY DEVIATION FROM THIS DESIGN; ANY FAILURE TO BUILD THE TRUSS IN CONFORMANCE WITH TPI; OR FABRICATING, HANDLING, SHIPPING, INSTALLING & BRACING OF TRUSSES. DESIGN CONFORMS WITH APPLICABLE PROVISIONS OF NDS (NATIONAL DESIGN SPEC, BY AF&PA) AND TPI. CONNECTOR PLATES ARE MADE OF 20/18/16GA (W,H/SS/K) ASTM A653 GRADE 40/60 (W, K/H,SS) GALV, STEEL. APPLY PLATES TO EACH FACE OF TRUSS AND, UNLESS OTHERWISE LOCATED ON THIS DESIGN, POSITION PER DRAWINGS 160/2. ANY INSPECTION OF PLATES FOLLOWED BY (i) SHALL BE PER ANNEX A3 OF TPI1-2002 SEC.3. A SEAL ON THIS DRAWING INDICATES ACCEPTANCE OF PROFESSIONAL ENGINEERING RESPONSIBILITY SOLELY FOR THE TRUSS COMPONENT DESIGN SHOWN. THE SUITABILITY AND USE OF THIS COMPONENT FOR ANY BUILDING IS THE RESPONSIBILITY OF THE BUILDING DESIGNER PER ANSI/TPI 1 SEC. 2.

DOUGLAS FLEMING LICENSE No. 66648 STATE OF FLORIDA PROFESSIONAL ENGINEER

11/03/2010

TC LL	20.0 PSF	REF	R2327- 61424
TC DL	7.0 PSF	DATE	11/03/10
BC DL	10.0 PSF	DRW	HCUSR2327 10307111
BC LL	0.0 PSF	HC-ENG	SSB/DF
TOT.LD.	37.0 PSF	SEQN-	337983
DUR.FAC.	1.25	FROM	JRG
SPACING	24.0"	JREF-	1U6L2327Z10

(10700-HOUSE ACCT. BAGGETT RES - CJ11C)

Top chord 2x4 SP #2 Dense
Bot chord 2x4 SP #2 Dense
Webs 2x4 SP #3

120 mph wind, 15.00 ft mean hgt, ASCE 7-05, CLOSED bldg, not located within 4.50 ft from roof edge, CAT II, EXP B, wind TC DL=4.2 psf, wind BC DL=5.0 psf. Iw=1.00 GCpi(+/-)=0.18

Wind reactions based on MWFRS pressures.

Left end vertical not exposed to wind pressure.

(A) Continuous lateral bracing equally spaced on member. Or 2x6 #3 or better "T" brace. 80% length of web member. Attached with 16d Box or Gun (0.135"x3.5",min.)nails @ 6" OC.

In lieu of rigid ceiling use purlins to brace BC @ 24" OC.

Deflection meets L/360 live and L/240 total load.

Special loads
------(Lumber Dur.Fac.=1.25 / Plate Dur.Fac.=1.25)
TC- From 55 plf at 0.00 to 55 plf at 15.65
BC- From 20 plf at 0.00 to 20 plf at 15.65
TC- 55.92 lb Conc. Load at 2.31
TC- 42.73 lb Conc. Load at 3.42
TC- 71.47 lb Conc. Load at 5.66
TC- 160.24 lb Conc. Load at 6.78
TC- 100.05 lb Conc. Load at 7.89
TC- 129.04 lb Conc. Load at 10.13
TC- 157.85 lb Conc. Load at 12.37
TC- 182.97 lb Conc. Load at 14.60
BC- 40.58 lb Conc. Load at 2.31
BC- 29.42 lb Conc. Load at 3.42
BC- 49.32 lb Conc. Load at 5.66
BC- 116.93 lb Conc. Load at 6.78
BC- 69.16 lb Conc. Load at 7.89
BC- 112.83 lb Conc. Load at 10.13
BC- 273.49 lb Conc. Load at 11.25
BC- 147.26 lb Conc. Load at 12.37
BC- 184.11 lb Conc. Load at 14.60

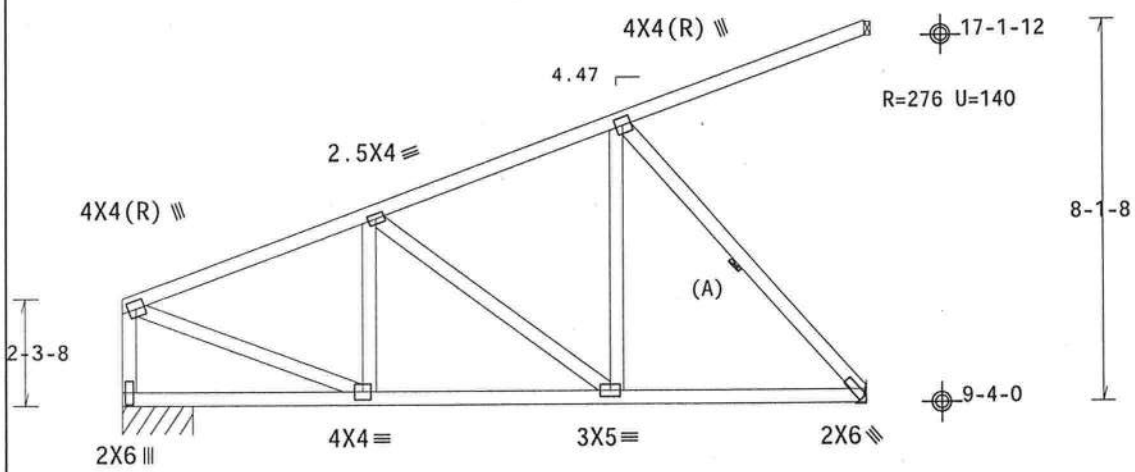

R=858 PLF U=299 PLF W=1-5-14
15-7-13 Over 3 Supports
R=1542 U=388
H=H1

Design Crit: FBC2007Res/TPI-2002(STD)
FT/RT=20%(0%)/10(0)

PLT TYP. Wave

9.01.02.0210.16 QTY: 1

FL/-/2/-/-/R/-

Scale =.25"/Ft.

ALPINE
ITW Building Components Group Inc.
Haines City, FL 33844
FL COA #0 278

WARNING TRUSSES REQUIRE EXTREME CARE IN FABRICATION, HANDLING, SHIPPING, INSTALLING AND BRACING. REFER TO BCSI (BUILDING COMPONENT SAFETY INFORMATION), PUBLISHED BY TPI (TRUSS PLATE INSTITUTE, 218 NORTH LEE STREET, SUITE 312, ALEXANDRIA, VA. 22314) AND WTCA (WOOD TRUSS COUNCIL OF AMERICA, 6300 ENTERPRISE LANE, MADISON, WI 53719) FOR SAFETY PRACTICES PRIOR TO PERFORMING THESE FUNCTIONS. UNLESS OTHERWISE INDICATED TOP CHORD SHALL HAVE PROPERLY ATTACHED STRUCTURAL PANELS AND BOTTOM CHORD SHALL HAVE A PROPERLY ATTACHED RIGID CEILING.

IMPORTANT FURNISH A COPY OF THIS DESIGN TO THE INSTALLATION CONTRACTOR. ITW BCG, INC. SHALL NOT BE RESPONSIBLE FOR ANY DEVIATION FROM THIS DESIGN; ANY FAILURE TO BUILD THE TRUSS IN CONFORMANCE WITH TPI; OR FABRICATING, HANDLING, SHIPPING, INSTALLING & BRACING OF TRUSSES. DESIGN CONFORMS WITH APPLICABLE PROVISIONS OF NDS (NATIONAL DESIGN SPEC. BY AF&PA) AND TPI. ITW BCG CONNECTOR PLATES ARE MADE OF 20/1B/16GA (W,H/SS/K) ASTM A653 GRADE 40/60 (W, K/H,SS) GALV. STEEL. APPLY PLATES TO EACH FACE OF TRUSS AND, UNLESS OTHERWISE LOCATED ON THIS DESIGN, POSITION PER DRAWINGS 160A-. ANY INSPECTION OF PLATES FOLLOWED BY (.) SHALL BE PER ANNEX A3 OF TPI1-2002 SEC.3. A SEAL ON THIS DRAWING INDICATES ACCEPTANCE OF PROFESSIONAL ENGINEERING RESPONSIBILITY SOLELY FOR THE TRUSS COMPONENT DESIGN SHOWN. THE SUITABILITY AND USE OF THIS COMPONENT FOR ANY BUILDING IS THE RESPONSIBILITY OF THE BUILDING DESIGNER PER ANSI/TPI 1 SEC. 2.

DOUGLAS FLEMING LICENSE No. 66648 STATE OF FLORIDA PROFESSIONAL ENGINEER

11/03/2010

TC LL	20.0 PSF	REF	R2327- 61425
TC DL	7.0 PSF	DATE	11/03/10
BC DL	10.0 PSF	DRW	HCUSR2327 10307140
BC LL	0.0 PSF	HC-ENG	SSB/DF
TOT.LD.	37.0 PSF	SEQN-	338387
DUR.FAC.	1.25	FROM	JRG
SPACING	24.0"	JREF-	1U6L2327Z10

SUBCONTRACTOR VERIFICATION FORM TBD

APPLICATION NUMBER 29099 CONTRACTOR PBA BUILDING CORP PHONE 407-482-8282

THIS FORM MUST BE SUBMITTED PRIOR TO THE ISSUANCE OF A PERMIT

In Columbia County one permit will cover all trades doing work at the permitted site. It is REQUIRED that we have records of the subcontractors who actually did the trade specific work under the permit. Per Florida Statute 440 and Ordinance 89-6, a contractor shall require all subcontractors to provide evidence of workers' compensation or exemption, general liability insurance and a valid Certificate of Competency license in Columbia County.

Any changes, the permitted contractor is responsible for the corrected form being submitted to this office prior to the start of that subcontractor beginning any work. Violations will result in stop work orders and/or fines.

ELECTRICAL 37	Print Name Donald Hollingsworth License #: ER13012377	Signature Phone #: 386-623-6982
MECHANICAL/ A/C 419	Print Name James Bertie License #: CAC058522	Signature Phone #: 352-331-2005
PLUMBING/ GAS 1081	Print Name Scott Wolfe License #: CFC051621	Signature Phone #: 386-935-0616
ROOFING 1019	Print Name OGLES ROOFING License #: CCC1328699	Signature Phone #: 386-364-4838
SHEET METAL for Roof	Print Name OGLES ROOFING License #: CCC1328699	Signature Phone #: 386-364-4838
FIRE SYSTEM/ SPRINKLER	Print Name N/A License#:	Signature Phone #:
SOLAR	Print Name N/A License #:	Signature Phone #:

Specialty License	License Number	Sub-Contractors Printed Name	Sub-Contractors Signature
MASON	CGC1508506	PBA BUILDING CORP.	
CONCRETE FINISHER	CGC1508506	PBA BUILDING CORP.	
FRAMING	CGC1508506	PBA BUILDING CORP.	
INSULATION	CGC1508506	PBA BUILDING CORP.	
STUCCO	N/A		
DRYWALL	CGC1508506	PBA BUILDING CORP.	
PLASTER	N/A		
CABINET INSTALLER	CGC1508506	PBA BUILDING CORP.	
PAINTING	CGC1508506	PBA BUILDING CORP.	
ACOUSTICAL CEILING	N/A		
GLASS	N/A		
CERAMIC TILE	CGC1508506	PBA BUILDING CORP.	
FLOOR COVERING	CGC1508506	PBA BUILDING CORP.	
ALUM/VINYL SIDING	N/A		
GARAGE DOOR	CGC1508506	PBA BUILDING CORP.	
METAL BLDG ERECTOR	N/A		

F. S. 440.103 Building permits; identification of minimum premium policy.--Every employer shall, as a condition to applying for and receiving a building permit, show proof and certify to the permit issuer that it has secured compensation for its employees under this chapter as provided in ss. 440.10 and 440.38, and shall be presented each time the employer applies for a building permit.

Permit 29099

SUBCONTRACTOR VERIFICATION FORM

1-13-11

APPLICATION NUMBER _____ CONTRACTOR _____ PHONE _____

THIS FORM MUST BE SUBMITTED PRIOR TO THE ISSUANCE OF A PERMIT

In Columbia County one permit will cover all trades doing work at the permitted site. It is REQUIRED that we have records of the subcontractors who actually did the trade specific work under the permit. Per Florida Statute 440 and Ordinance 89-6, a contractor shall require all subcontractors to provide evidence of workers' compensation or exemption, general liability insurance and a valid Certificate of Competency license in Columbia County.

Any changes, the permitted contractor is responsible for the corrected form being submitted to this office prior to the start of that subcontractor beginning any work. Violations will result in stop work orders and/or fines.

ELECTRICAL 1085	Print Name Robert Coe (Alliance Integrated Svcs) License #: EC0001727	Signature _____ Phone #: 407-320-1956
MECHANICAL/ A/C _____	Print Name _____ License #:	Signature _____ Phone #:
PLUMBING/ GAS	Print Name _____ License #:	Signature _____ Phone #:
ROOFING	Print Name _____ License #:	Signature _____ Phone #:
SHEET METAL	Print Name _____ License #:	Signature _____ Phone #:
FIRE SYSTEM/ SPRINKLER	Print Name _____ License#:	Signature _____ Phone #:
SOLAR	Print Name _____ License #:	Signature _____ Phone #:

Specialty License	License Number	Sub-Contractors Printed Name	Sub-Contractors Signature
MASON			
CONCRETE FINISHER			
FRAMING			
INSULATION			
STUCCO			
DRYWALL			
PLASTER			
CABINET INSTALLER			
PAINTING			
ACOUSTICAL CEILING			
GLASS			
CERAMIC TILE			
FLOOR COVERING			
ALUM/VINYL SIDING			
GARAGE DOOR			
METAL BLDG ERECTOR			

F. S. 440.103 Building permits; identification of minimum premium policy.--Every employer shall, as a condition to applying for and receiving a building permit, show proof and certify to the permit issuer that it has secured compensation for its employees under this chapter as provided in ss. 440.10 and 440.38, and shall be presented each time the employer applies for a building permit.

1019

10:23:40 AM 12/28/2010

Licensee Details

Licensee Information

Name:	**OGLES, ROBERT LESLEE II (Primary Name)** **RL OGLES ROOFING LLC (DBA Name)**
Main Address:	**18523 COUNTY ROAD 136** **LIVE OAK Florida 32060**
County:	**SUWANNEE**
License Mailing:	
LicenseLocation:	

License Information

License Type:	**Certified Roofing Contractor**
Rank:	**Cert Roofing**
License Number:	**CCC1328699**
Status:	**Current,Active**
Licensure Date:	**07/17/2008**
Expires:	**08/31/2012**

Special Qualifications	**Qualification Effective**
Construction Business	**07/17/2008**
Fingerprint (Construction Industry Licensing Board)	**04/03/2008**

View Related License Information

View License Complaint

| Terms of Use | | Privacy Statement |

CERTIFICATE OF

OCCUPANCY

COLUMBIA COUNTY, FLORIDA

Department of Building and Zoning Inspection

This Certificate of Occupancy is issued to the below named permit holder for the building and premises at the below named location, and certifies that the work has been completed in accordance with the Columbia County Building Code.

Parcel Number 22-5S-17-09322-004 **Building permit No.** 000029099

Use Classification SFD, UTILITY **Fire:** 19.26

Permit Holder DOUG BAGGETT **Waste:** 50.25

Owner of Building DONALD BAGGETT **Total:** 69.51

Location: 415 SW CIRRUS DRIVE,LAKE CITY, F 32025

Date: 07/08/2011

Troy Crews by HD

Building Inspector

POST IN A CONSPICUOUS PLACE
(Business Places Only)