Permit Details

Permit Information

Permit #: 000029696 **Septic #:** 11-370
Issued: Monday, September 26, 2011
Permit Type: SFD, UTILITY
Subdivision: AKA
Parcel #: 16-5S-17-09270-001
Owner: MICHAEL & JANET HENDERSON
Address: 1061 SW ENGLISH STREET LAKE CITY FL 32025
Zoning: AG-3
Flood Zone: X

Contractor Information

Contractor: OWNER
BUILDER
Address: FL
License:

Notes:
NOC ON FILE,
FLOOR ONE FOOT ABOVE THE ROAD
OWNER BUILDER DISCLOSURE ON FILE
Inspection Notes:
FRAMING & BLOCKING 10/28/2011 TC-RJ, FLOOR FRAMING 10/27/11 TC-RJ

Inspection Date	Notes	Inspected By
9/26/2011	Foundation Inspection	RJ
9/29/2011	Perimeter Beam/Column Inspection	TC
12/1/2011	Sheeting and Nailing Inspection	TC

Close Window

A/C
Electrical } 1
Plumbing
Perm Power 2
CO 3

~~[illegible]~~
25% 208.75 1/4
$835.00
Building fee

Attn. Connie

Columbia County Building Department
Culvert Waiver

Culvert Waiver No. 000001908

DATE: 09/07/2011 BUILDING PERMIT NO. N/A

APPLICANT JANET HENDERSON PHONE 904.509.1450

ADDRESS 5378 PAINTED PONY AVENUE MELROSE FL 32666

OWNER MICHAEL & JANET HENDERSON PHONE 904.509.1450

ADDRESS 1061 SW ENGLISH STREET LAKE CITY FL 32025

CONTRACTOR _____ PHONE _____

LOCATION OF PROPERTY 41/441-S TO ENGLISH STREET,TR AND GO 9/10 OF A MILE TO PROPERTY ON R.

SUBDIVISION/LOT/BLOCK/PHASE/UNIT _____

PARCEL ID # 16-5S-17-09270-001

I HEREBY CERTIFY THAT I UNDERSTAND AND WILL FULLY COMPLY WITH THE DECISION OF THE COLUMBIA COUNTY PUBLIC WORKS DEPARTMENT IN CONNECTION WITH THE HEREIN PROPOSED APPLICATION.

SIGNATURE: _____

A SEPARATE CHECK IS REQUIRED
MAKE CHECKS PAYABLE TO BCC

Amount Paid 50.00

PUBLIC WORKS DEPARTMENT USE ONLY

I HEREBY CERTIFY THAT I HAVE EXAMINED THIS APPLICATION AND DETERMINED THAT THE CULVERT WAIVER IS:

X APPROVED _____ NOT APPROVED - NEEDS A CULVERT PERMIT

COMMENTS: _____

SIGNED: James Dr DATE: 9-9-11

ANY QUESTIONS PLEASE CONTACT THE PUBLIC WORKS DEPARTMENT AT 386-752-5955.

135 NE Hernando Ave., Suite B-21
Lake City, FL 32055
Phone: 386-758-1008 Fax: 386-758-2160

Columbia County Building Permit Application

For Office Use Only Application # 1109-22 Date Received 9-14-11 By LH Permit # 29696

Zoning Official BLK Date 23 Sept. 2011 Flood Zone X Land Use A-3 Zoning A-3

FEMA Map # N/A Elevation N/A MFE N/A River N/A Plans Examiner TC Date 9-20-11

Comments

☑ NOC ☑ EH ☑ Deed or PA ☑ Site Plan ☑ State Road Info ☑ Well letter ☑ 911 Sheet ☐ Parent Parcel #

☐ Dev Permit # ☐ In Floodway ☑ Letter of Auth. from Contractor ☑ W Comp. letter

IMPACT FEES: EMS Fire Corr ☑ Sub VF Form

Road/Code School = TOTAL (Suspended) ☑ App Fee Paid

Septic Permit No. 11-370 Fax

Name Authorized Person Signing Permit Michael Henderson Phone 904-716-7276

Address 5378 Painted Pony Ave Melrose FL 32666

Owners Name Michael and Janet Henderson Phone 352-473-2890 904-509-1450 904-716-7276

911 Address 1061 SW English St. Lake City, FL 32025

Contractors Name Michael Henderson Phone Same as above

Address 5378 Painted Pony Ave Melrose, FL 32666

Fee Simple Owner Name & Address

Bonding Co. Name & Address

Architect/Engineer Name & Address

Mortgage Lenders Name & Address None - Cash

Circle the correct power company - FL Power & Light - (Clay Elec.) - Suwannee Valley Elec. - Progress Energy

Property ID Number 16-5S-17-09270-001 Estimated Cost of Construction $80,000.00

Subdivision Name Lot 3 & 4 Block Unit Phase

Driving Directions From Lake City go South on US441 approx. 1¼ miles to SW English St. turn right onto English St and drive 0.9 miles to 1061 English St. on right Number of Existing Dwellings on Property 0

Construction of Single Family Home Total Acreage 25 Lot Size

Do you need a - Culvert Permit or Culvert Waiver or (Have an Existing Drive) 1908 Approved Waiver Total Building Height

Actual Distance of Structure from Property Lines - Front 1,226'± Side 474'± Side 123' Rear 440'

Number of Stories 1 Heated Floor Area 1780 Total Floor Area 3328 Roof Pitch

Application is hereby made to obtain a permit to do work and installations as indicated. I certify that no work or installation has commenced prior to the issuance of a permit and that all work be performed to meet the standards of all laws regulating construction in this jurisdiction. CODE: Florida Building Code 2007 with 2009 Supplements and the 2008 National Electrical Code.

#6450 943.28

Columbia County Building Permit Application

TIME LIMITATIONS OF APPLICATION : An application for a permit for any proposed work shall be deemed to have been abandoned 180 days after the date of filing, unless such application has been pursued in good faith or a permit has been issued; except that the building official is authorized to grant one or more extensions of time for additional periods not exceeding 90 days each. The extension shall be requested in writing and justifiable cause demonstrated.

TIME LIMITATIONS OF PERMITS: Every permit issued shall become invalid unless the work authorized by such permit is commenced within 180 days after its issuance, or if the work authorized by such permit is suspended or abandoned for a period of 180 days after the time work is commenced. A valid permit receives an approved inspection every 180 days. Work shall be considered not suspended, abandoned or invalid when the permit has received an approved inspection within 180 days of the previous approved inspection.

FLORIDA'S CONSTRUCTION LIEN LAW: Protect Yourself and Your Investment: According to Florida Law, those who work on your property or provide materials, and are not paid-in-full, have a right to enforce their claim for payment against your property. This claim is known as a construction lien. If your contractor fails to pay subcontractors or material suppliers or neglects to make other legally required payments, the people who are owed money may look to your property for payment, even if you have paid your contractor in full.
This means if a lien is filed against your property, it could be sold against your will to pay for labor, materials or other services which your contractor may have failed to pay.

NOTICE OF RESPONSIBILITY TO BUILDING PERMITEE: ***YOU ARE HEREBY NOTIFIED*** as the recipient of a building permit from Columbia County, Florida, you will be held responsible to the County for any damage to sidewalks and/or road curbs and gutters, concrete features and structures, together with damage to drainage facilities, removal of sod, major changes to lot grades that result in ponding of water, or other damage to roadway and other public infrastructure facilities caused by you or your contractor, subcontractors, agents or representatives in the construction and/or improvement of the building and lot for which this permit is issued. No certificate of occupancy will be issued until all corrective work to these public infrastructures and facilities has been corrected.

WARNING TO OWNER: YOUR FAILURE TO RECORD A NOTICE OF COMMENCMENT MAY RESULT IN YOU PAYING TWICE FOR IMPROVEMENTS TO YOUR PROPERTY. A NOTICE OF COMMENCEMENT MUST BE RECORDED AND POSTED ON THE JOB SITE BEFORE THE FIRST INSPECTION. IF YOU INTEND TO OBTAIN FINANCING, CONSULT WITH YOUR LENDER OR ATTORNEY BEFORE RECORDING YOUR NOTICE OF COMMENCEMENT.

OWNERS CERTIFICATION: I CERTIFY THAT ALL THE FOREGOING INFORMATION IS ACCURATE AND THAT ALL WORK WILL BE DONE IN COMPLIANCE WITH ALL APPLICABLE LAWS REGULATING CONSTRUCTION AND ZONING.

NOTICE TO OWNER: There are some properties that may have deed restrictions recorded upon them. These restrictions may limit or prohibit the work applied for in your building permit. You must verify if your property is encumbered by any restrictions or face possible litigation and or fines.

(Owners Must Sign All Applications Before Permit Issuance.)

X _____
Owners Signature ****OWNER BUILDERS MUST PERSONALLY APPEAR AND SIGN THE BUILDING PERMIT.**

CONTRACTORS AFFIDAVIT: By my signature I understand and agree that I have informed and provided this written statement to the owner of all the above written responsibilities in Columbia County for obtaining this Building Permit including all application and permit time limitations.

_____
Contractor's Signature (Permitee)

Contractor's License Number_____
Columbia County
Competency Card Number_____

Affirmed under penalty of perjury to by the Contractor and subscribed before me this ____ day of _____ 20___.

Personally known_____ or Produced Identification_____

_____ **SEAL:**

State of Florida Notary Signature (For the Contractor)

NOTICE OF COMMENCEMENT

Clerk's Office Stamp

Inst:201112014075 Date:9/14/2011 Time:2:40 PM
DC,P.DeWitt Cason,Columbia County Page 1 of 1 B:1221 P:919

Tax Parcel Identification Number:

16-5S-17-09270-001

THE UNDERSIGNED hereby gives notice that improvements will be made to certain real property, and in accordance with Section 713.13 of the Florida Statutes, the following information is provided in this **NOTICE OF COMMENCEMENT.**

1. Description of property *(legal description)*: 1061 SW English St. Lake City, FL 32025
   a) Street *(job)* Address:
2. General description of improvements: New Home
3. Owner Information
   a) Name and address: Michael & Janet Henderson 5376 Painted Pony Ave. Melrose, FL 32666
   b) Name and address of fee simple titleholder (if other than owner)
   c) Interest in property Homeowner
4. Contractor Information
   a) Name and address: Owner Builder
   b) Telephone No.: Fax No. (Opt.)
5. Surety Information
   a) Name and address:
   b) Amount of Bond:
   c) Telephone No.: Fax No. (Opt.)
6. Lender
   a) Name and address:
   b) Phone No.
7. Identity of person within the State of Florida designated by owner upon whom notices or other documents may be served:
   a) Name and address:
   b) Telephone No.: Fax No. (Opt.)
8. In addition to himself, owner designates the following person to receive a copy of the Lienor's Notice as provided in Section 713.13(l)(b), Florida Statutes:
   a) Name and address:
   b) Telephone No.: Fax No. (Opt.)
9. Expiration date of Notice of Commencement **(the expiration date is one year from the date of recording unless a different date is specified)**: 09-14-2013

WARNING TO OWNER: ANY PAYMENTS MADE BY THE OWNER AFTER THE EXPIRATION OF THE NOTICE OF COMMENCEMENT ARE CONSIDERED IMPROPER PAYMENTS UNDER CHAPTER 713, PART I, SECTION 713.13, FLORIDA STATUTES, AND CAN RESULT IN YOUR PAYING TWICE FOR IMPROVEMENTS TO YOUR PROPERTY; A NOTICE OF COMMENCEMENT MUST BE RECORDED AND POSTED ON THE JOB SITE BEFORE THE FIRST INSPECTION. IF YOU INTEND TO OBTAIN FINANCING, CONSULT YOUR LENDER OR AN ATTORNEY BEFORE COMMENCING WORK OR RECORDING YOUR NOTICE OF COMMENCEMENT.

STATE OF FLORIDA
COUNTY OF COLUMBIA

10. X
Signature of Owner or Owner's Authorized Office/Director/Partner/Manager

Michael Henderson
Printed Name

The foregoing instrument was acknowledged before me, a Florida Notary, this 14 day of September, 20 11, by: Owner as Owner Builder (type of authority, e.g. officer, trustee, attorney fact) for Michael Henderson (name of party on behalf of whom instrument was executed).

Personally Known ____ OR Produced Identification ✓ Type FL DL

Notary Signature Lauri Hodson Notary Stamp or Seal:

LAURIE HODSON
MY COMMISSION # DD 805657
EXPIRES: July 14, 2012
Bonded Thru Notary Public Underwriters

—AND—

11. Verification pursuant to Section 92.525, Florida Statutes. Under penalties of perjury, I declare that I have read the foregoing and that the facts stated in it are true to the best of my knowledge and belief.

Signature of Natural Person Signing (in line #10 above.)

COLUMBIA COUNTY 9-1-1 ADDRESSING

P. O. Box 1787, Lake City, FL 32056-1787
PHONE: (386) 758-1125 * FAX: (386) 758-1365 * Email: ron_croft@columbiacountyfla.com

Addressing Maintenance

To maintain the Countywide Addressing Policy you must make application for a 9-1-1 Address at the time you apply for a building permit. The established standards for assigning and posting numbers to all principal buildings, dwellings, businesses and industries are contained in Columbia County Ordinance 2001-9. The addressing system is to enable Emergency Service Agencies to locate you in an emergency, and to assist the United States Postal Service and the public in the timely and efficient provision of services to residents and businesses of Columbia County.

DATE REQUESTED: 7/27/2011 **DATE ISSUED:** 7/29/2011

ENHANCED 9-1-1 ADDRESS:

1061 SW ENGLISH ST

LAKE CITY FL 32025

PROPERTY APPRAISER PARCEL NUMBER:

16-5S-17-09270-001

Remarks:

ADDRESS FOR PROPOSED NEW STRUCTURE ON PARCEL.

Address Issued By: SIGNED: / RONAL N. CROFT

Columbia County 9-1-1 Addressing / GIS Department

NOTICE: THIS ADDRESS WAS ISSUED BASED ON LOCATION INFORMATION RECEIVED FROM THE REQUESTER. SHOULD, AT A LATER DATE, THE LOCATION INFORMATION BE FOUND TO BE IN ERROR, THIS ADDRESS IS SUBJECT TO CHANGE.

2040

1. A PLAT, PLAN, OR DRAWING SHOWING THE PROPERTY LINES OF THE PARCEL.
2. LOCATION OF PLANNED RESIDENT OR BUSINESS STRUCTURE ON THE PROPERTY WITH DISTANCES FROM AT LEAST TWO OF THE PROPERTY LINES TO THE STRUCTURE (SEE SAMPLE BELOW).
3. LOCATION OF THE ACCESS POINT (DRIVEWAY, ETC.) ON THE ROADWAY FROM WHICH LOCATION IS TO BE ADDRESSED WITH A DISTANCE FROM A PARALLEL PROPERTY LINE AND OR PROPERTY CORNER (SEE SAMPLE BELOW).
4. TRAVEL OF THE DRIVEWAY FROM THE ACCESS POINT TO THE STRUCTURE (SEE SAMPLE BELOW).

SAMPLE:

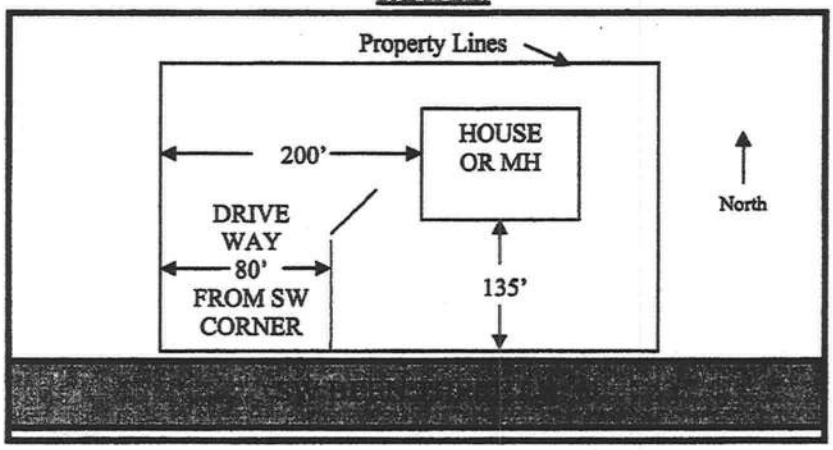

SITE PLAN BOX:

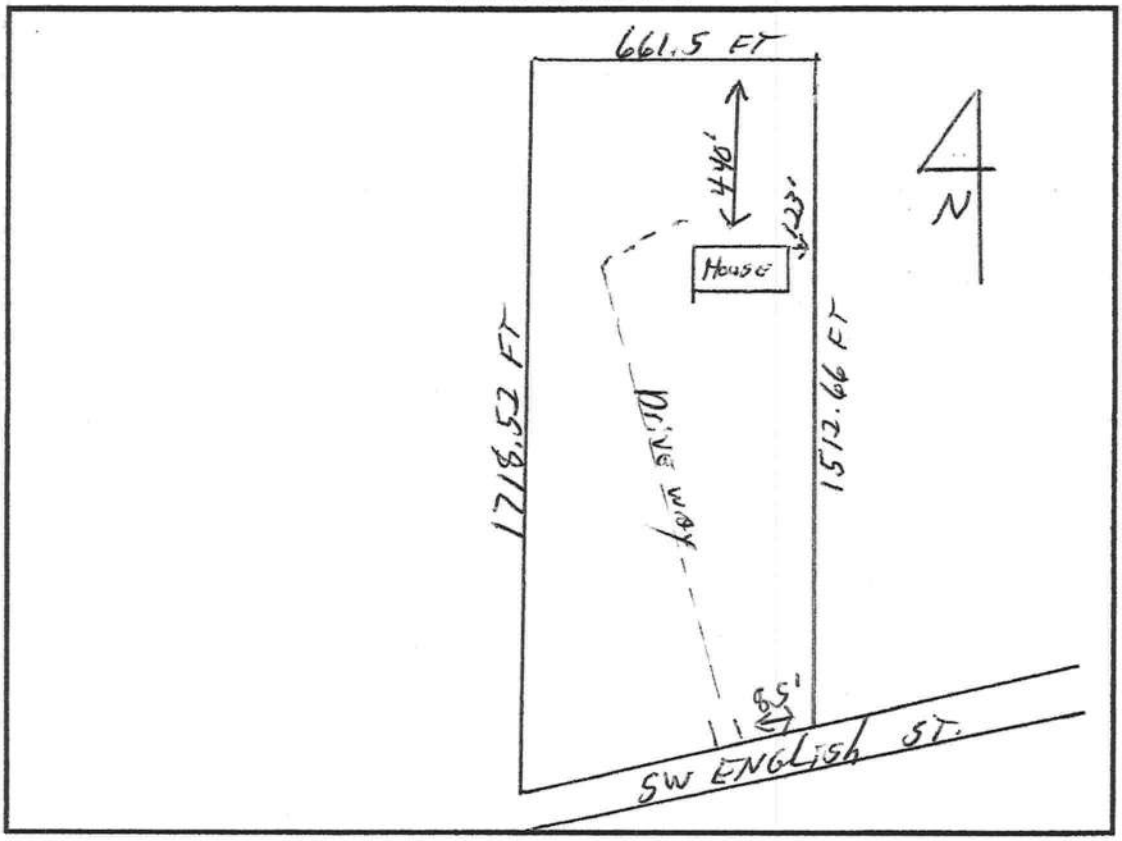

Columbia County Property Appraiser

DB Last Updated: 6/22/2011

2010 Tax Year

Tax Collector | Tax Estimator | Property Card | Parcel List Generator | Interactive GIS Map | Print

Parcel: 16-5S-17-09270-001

<< Next Lower Parcel | Next Higher Parcel >>

Search Result: 1 of 1

Owner & Property Info

old owner

Owner's Name	KARLTON MATTHEW B & LYNDI M		
Mailing Address	636 SE SUNFLOWER COURT LAKE CITY, FL 32055		
Site Address	SUNFLOWER COURT		
Use Desc. (code)	CROPLAND C (005200)		
Tax District	3 (County)	**Neighborhood**	16517
Land Area	24.050 ACRES	**Market Area**	02
Description	NOTE: This description is not to be used as the Legal Description for this parcel in any legal transaction.		

LOT 3: COMM NW COR OF SE1/4, E 1323.12 FT, S 808.03 FT FOR POB, CONT S 521.53 FT, S 183.18 FT TO N R/W OF ENGLISH RD, SW 696 FT, N 289.89 FT, N 520.60 FT, E 661.43 FT TO POB & LOT 4: COMM NW COR OF SE1/4, E 661.56 FT FOR POB, CONT E 661.56 FT, S 808.03 FT, W 661.43 FT,N 808.03 FT TO POB ORB 372-79, TO TRUST 829-749, 894-1258 THRU 1268, 962-2086, WD 1144-2315

Property & Assessment Values

2010 Certified Values		
Mkt Land Value	cnt: (1)	$0.00
Ag Land Value	cnt: (0)	$4,810.00
Building Value	cnt: (0)	$0.00
XFOB Value	cnt: (0)	$0.00
Total Appraised Value		$4,810.00
Just Value		$111,038.00
Class Value		$4,810.00
Assessed Value		$4,810.00
Exempt Value		$0.00
Total Taxable Value		Cnty: $4,810 Other: $4,810 | Schl: $4,810

2011 Working Values

NOTE:
2011 Working Values are NOT certified values and therefore are subject to change before being finalized for ad valorem assessment purposes.

Show Working Values

Sales History

Show Similar Sales within 1/2 mile

Sale Date	OR Book/Page	OR Code	Vacant / Improved	Qualified Sale	Sale RCode	Sale Price
3/4/2008	1144/2312	WD	V	Q		$175,000.00

Building Characteristics

Bldg Item	Bldg Desc	Year Blt	Ext. Walls	Heated S.F.	Actual S.F.	Bldg Value
			NONE			

Extra Features & Out Buildings

Code	Desc	Year Blt	Value	Units	Dims	Condition (% Good)
			NONE			

Land Breakdown

Lnd Code	Desc	Units	Adjustments	Eff Rate	Lnd Value
005200	CROPLAND 2 (AG)	24.05 AC	1.00/1.00/1.00/1.00	$200.00	$4,810.00
009910	MKT.VAL.AG (MKT)	24.05 AC	1.00/1.00/1.00/1.00	$0.00	$99,934.00

Columbia County Property Appraiser

DB Last Updated: 6/22/2011

1 of 1

THIS INSTRUMENT WAS PREPARED BY:

TERRY McDAVID
POST OFFICE BOX 1328
LAKE CITY, FL 32056-1328

RETURN TO:

TERRY McDAVID
POST OFFICE BOX 1328
LAKE CITY, FL 32056-1328

File No. 11-117

Property Appraiser's
Parcel Identification No.
R09270-001

Recording Fee $ 27.00
Documentary Stamp $ 658.00
Consideration $ 92,000.00

Inst.201112011309 Date 7/26/2011 Time 3:12 PM
Doc Stamp-Deed 658.00
DC,P DeWitt Cason Columbia County Page 1 of 3 B 1218 P 1254

WARRANTY DEED

THIS INDENTURE, made this 25th day of July 2011, between MATTHEW B. KARLTON and his wife, LYNDI M. KARLTON, whose post office address is 636 SE Sunflower Court, Lake City, FL 32055, of the County of Columbia, State of Florida, grantor*, and MICHAEL L. HENDERSON and his wife, JANET J. HENDERSON, whose post office address is 5378 Painted Pony Avenue, Melrose, FL 32666, grantee*,

WITNESSETH: that said grantor, for and in consideration of the sum of Ten Dollars ($10.00), and other good and valuable considerations to said grantor in hand paid by said grantee, the receipt whereof is hereby acknowledged, has granted, bargained, and sold to the said grantee, and grantee's heirs and assigns forever, the following described land, situate, lying and being in the County of Columbia and State of Florida, to-wit:

SEE SCHEDULE A ATTACHED HERETO AND MADE A PART HEREOF.

SUBJECT TO: Restrictions, easements and outstanding mineral rights of record, if any, and taxes for the current year.

and said grantor does hereby fully warrant the title to said land, and will defend the same against the lawful claims of all persons whomsoever.

*"Grantor" and "Grantee" are used for singular or plural, as context requires.

IN WITNESS WHEREOF, grantor has hereunto set grantor's hand and seal the day and year first above written.

Signed, sealed and delivered
in our presence:

Terry McDavid
(Print or Type Name)

DeEtte F. Brown
(Print or Type Name)

MATTHEW B. KARLTON

LYNDI M. KARLTON

STATE OF FLORIDA
COUNTY OF COLUMBIA

The foregoing instrument was acknowledged before me this 25th day of July 2011, by MATTHEW B. KARLTON and his wife, LYNDI M. KARLTON. They are personally known to me or produced _____ as identification and did not take an oath.

Notary Public
My Commission Expires:_____

TERRY MCDAVID
MY COMMISSION # DD 934109
EXPIRES: January 16, 2014
Bonded Thru Notary Public Underwriters

SCHEDULE A

LOT 3:

A parcel of land in Section 16, Township 5 South, Range 17 East, Columbia County, Florida, being more particularly described as follows:

COMMENCE at the Northwest corner of the Southeast 1/4 and run North 89°41'36" East along the North line of the Southeast 1/4 a distance of 1323.12 feet to the Northeast corner of the Northwest 1/4 of the Southeast 1/4; thence South 00°41'52" West along the East line of the Northwest 1/4 of the Southeast 1/4 a distance of 808.03 feet to the POINT OF BEGINNING; thence continue South 00°41'52" West along said East line of the Northwest 1/4 of the Southeast 1/4 a distance of 521.53 feet to the Northeast corner of the Southwest 1/4 of the Southeast 1/4; thence South 00°43'23" West along the East line of the Southwest 1/4 of the Southeast 1/4 a distance of 183.18 feet to a point on the Northerly Maintained Right-of-Way line of English Road (a county maintained road); thence Southwesterly along said Northerly Maintained Right-of-Way line of English Road (a county maintained road) a distance of 696 feet, more or less, to a point on the West line of the East 1/2 of the Southwest 1/4 of the Southeast 1/4; thence North 00°42'14" East along said West line of the East 1/2 of the Southwest 1/4 of the Southeast 1/4 a distance of 389.89 feet to the Southwest corner of the East 1/2 of the Northwest 1/4 of the Southeast 1/4; thence North 00°41'20" East along the West line of the East 1/2 of the Northwest 1/4 of the Southeast 1/4 a distance of 520.60 feet; thence North 89°41'36" East a distance of 661.43 feet to the POINT OF BEGINNING.

SUBJECT TO: An easement 30.00 feet in width for ingress and egress across the West 30.00 feet thereof.

LOT 4:

A parcel of land in Section 16, Township 5 South, Range 17 East, Columbia County, Florida, being more particularly described as follows:

COMMENCE at the Northwest corner of the Southeast 1/4 and run North 89°41'36" East along the North line of the Southeast 1/4 a distance of 661.56 feet to the Northwest corner of the East 1/2 of the Northwest 1/4 of the Southeast 1/4 and the POINT OF BEGINNING; thence continue North 89°41'36" East still along said North line of the Southeast 1/4 a distance of 661.56 feet to the Northeast corner of the Northwest 1/4 of the Southeast 1/4; thence South 00°41'52" West along the East line of the Northwest 1/4 of the Southeast 1/4 a distance of 808.03 feet; thence South 89°41'36" West a distance of 661.43 feet to a point on the West line of the East 1/2 of the Northwest 1/4 of the Southeast 1/4; thence North 00°41'20" East along said West line of the East 1/2 of the Northwest 1/4 of the Southeast 1/4 a distance of 808.03 feet to the POINT OF BEGINNING.

TOGETHER WITH: An easement 30.00 feet in width for ingress, egress and utilities in Section 16, Township 5 South, Range 17 East, Columbia County, Florida, described as follows:

The West 30.00 feet of the East 1/4 of the Southwest 1/4 of the Southeast 1/4 lying North of English Road (a county maintained road); AND ALSO: The West 30.00 feet of the South 520.60 feet of the East 1/2 of the Northwest 1/4 of the Southeast 1/4.

STATE OF FLORIDA
DEPARTMENT OF HEALTH

APPLICATION FOR ONSITE SEWAGE DISPOSAL SYSTEM CONSTRUCTION PERMIT

Permit Application Number 11-370

PART II - SITE PLAN

Scale: Each block represents 5 feet and 1 inch = 50 feet.

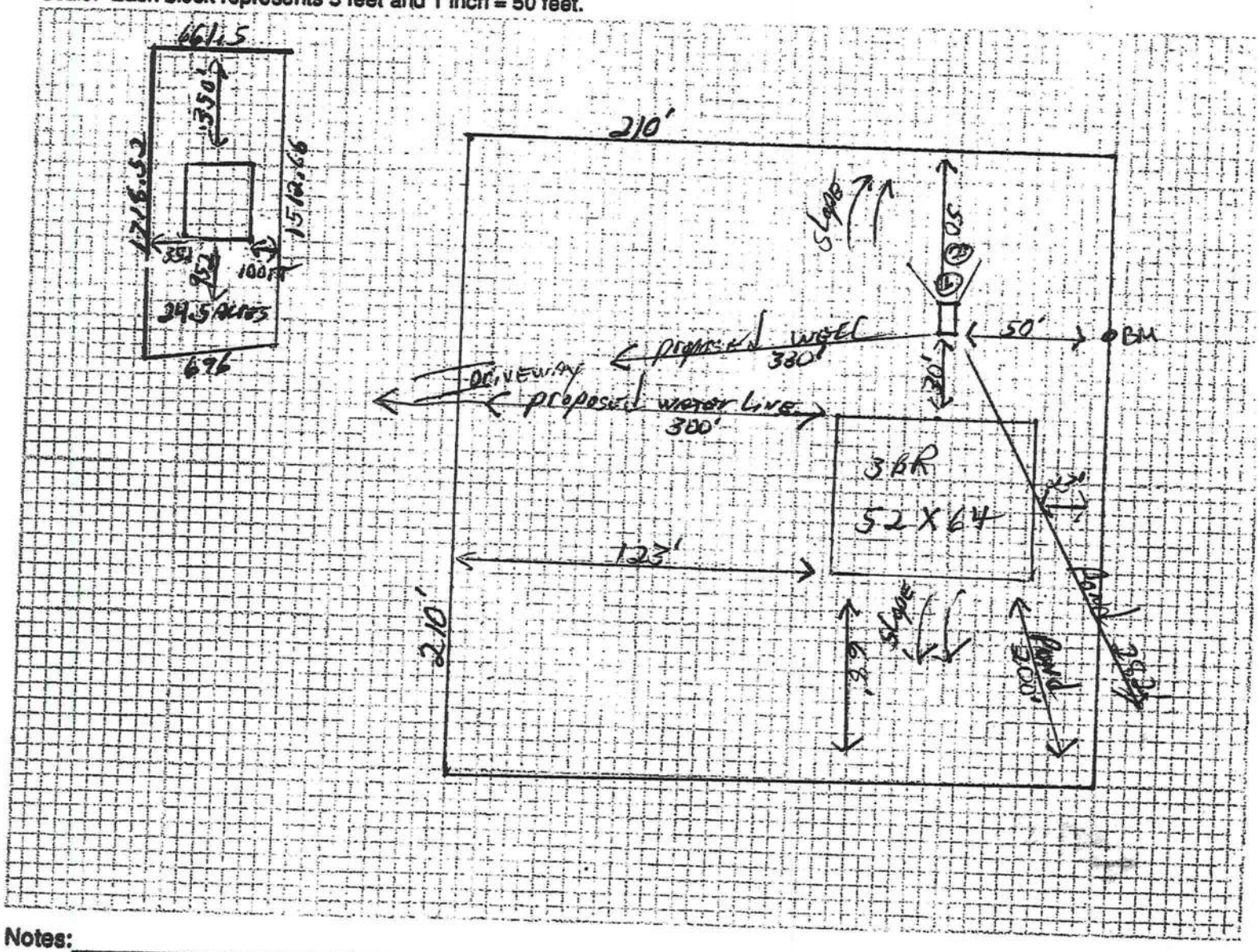

Notes:

Site Plan submitted by: Michael L Hendrix
Signature

OWNER
Title

Plan Approved X

Not Approved

Date 8/29/2011

By

Columbia
County Health Department

ALL CHANGES MUST BE APPROVED BY THE COUNTY HEALTH DEPARTMENT

4015; 10/99 (replaces HRS-H Form 4015 which may be used)
ock Number: 5744-002-4015-8)

JSO 24204895 9/1/11 11-0370

STATE OF FLORIDA
DEPARTMENT OF HEALTH
ONSITE SEWAGE TREATMENT AND DISPOSAL SYSTEM
APPLICATION FOR CONSTRUCTION PERMIT

PERMIT NO. 1045840
DATE PAID: 8/30/11
FEE PAID: 425.00
RECEIPT #: 1217523

APPLICATION FOR:
[X] New System [ ] Existing System [ ] Holding Tank [ ] Innovative
[ ] Repair [ ] Abandonment [ ] Temporary [ ] _____

APPLICANT: Michael and Janet Henderson

AGENT: Same as above TELEPHONE: 352-473-2890 904-509-1450

MAILING ADDRESS: 5378 Painted Pony Ave Melrose, FL 32666

==========

TO BE COMPLETED BY APPLICANT OR APPLICANT'S AUTHORIZED AGENT. SYSTEMS MUST BE CONSTRUCTED BY A PERSON LICENSED PURSUANT TO 489.105(3)(m) OR 489.552, FLORIDA STATUTES. IT IS THE APPLICANT'S RESPONSIBILITY TO PROVIDE DOCUMENTATION OF THE DATE THE LOT WAS CREATED OR PLATTED (MM/DD/YY) IF REQUESTING CONSIDERATION OF STATUTORY GRANDFATHER PROVISIONS.

==========

PROPERTY INFORMATION

LOT: 3 & 4 BLOCK: _____ SUBDIVISION: _____ PLATTED: _____

PROPERTY ID #: 16-5S-17-09270-001 ZONING: AG I/M OR EQUIVALENT: [Y / N]

PROPERTY SIZE: 25 ACRES WATER SUPPLY: [X] PRIVATE PUBLIC [ ]<=2000GPD [ ]>2000GPD

IS SEWER AVAILABLE AS PER 381.0065, FS? [Y / N] DISTANCE TO SEWER: _____ FT

PROPERTY ADDRESS: 1061 SW English St., Lake City, FL 32025

DIRECTIONS TO PROPERTY: From Lake City, go south on US441 approx. 14 miles to English St. - turn right onto English St and go 0.9 miles to driveway on right (1061 SW English St.) at dead end.

BUILDING INFORMATION [X] RESIDENTIAL [ ] COMMERCIAL

Unit No	Type of Establishment	No. of Bedrooms	Building Area Sqft	Commercial/Institutional System Design Table 1, Chapter 64E-6, FAC
1	Single family Home	3	3328 (includes porches)	
2			1728	Living
3				
4				

[ ] Floor/Equipment Drains [ ] Other (Specify) _____

SIGNATURE: X Michael Henderson DATE: 8/29/2011

DH 4015, 08/09 (Obsoletes previous editions which may not be used)
Incorporated 64E-6.001, FAC

CHURCHILL WAY
ENGLISH ST

Hall's Pump & Well Service, Inc.
904 NW Main Blvd
Lake City, FL. 32055

Date: 09/07/2011

Notice to All Contractors:
Re: Michael Henderson
16-5S-17-09270-001

Please be advised that due to the new building codes we will use a large capacity diaphragm tank on all new wells. This will insure a minimum of one (1) minute draw down or one (1) minute refill. If a smaller diaphragm tank is used then we will install a cycle stop valve which will produce the same results. All wells will have a pump & tank combination that will be sufficient enough for each situation.

If you have any questions please feel free to call our office.

Thank You,

Russell E Davis

Russell Davis

COLUMBIA COUNTY BUILDING DEPARTMENT
135 NE Hernando Ave., Suite B-21
Lake City, FL 32055
Office: 386-758-1008 Fax: 386-758-2160

OWNER BUILDER DISCLOSURE STATEMENT

I understand that state law requires construction to be done by a licensed contractor and have applied for an owner-builder permit under an exemption from the law. The exemption specifies that I, as the owner of the property listed, may act as my own contractor with certain restrictions even though I do not have a license.

I understand that building permits are not required to be signed by a property owner unless he or she is responsible for the construction and is not hiring a licensed contractor to assume responsibility.

I understand that, as an owner-builder, I am the responsible party of record on a permit. I understand that I may protect myself from potential financial risk by hiring a licensed contractor and having the permit filed in his or her name instead of my own name. I also understand that a contractor is required by law to be licensed and bonded in Florida and to list his or her license numbers on permits and contracts.

I understand that I may build or improve a one-family or two-family residence or farm outbuilding. I may also build or improve a commercial building if the costs do not exceed $75,000. The building or residence must be for my own use or occupancy. It may not be built or substantially improved for sale or lease. If a building or residence that I have built or substantially improved myself is sold or leased with in 1 year after the construction is complete, the law will presume that I built or substantially improved it for sale or lease, which violates the exemption.

I understand that, as the owner-builder, I must provide direct, onsite supervision of the construction.

I understand that I may not hire an unlicensed person to act as my contractor or to supervise persons working on my building or residence. It is my responsibility to ensure that the persons whom I employ have the licenses required by law and by county or municipal ordinance.

I understand that it is frequent practice of unlicensed persons to have the property owner obtain an owner-builder permit that erroneously implies that the property owner is providing his or her own labor and materials. I, as an owner-builder, may be held liable and subjected to serious financial risk for any injuries sustained by an unlicensed person or his or her employees while working on my property. My homeowner's insurance may not provide coverage for those injuries. I am willfully acting as an owner-builder and am aware of the limits of my insurance coverage for injuries to workers on my property.

I understand that I may not delegate the responsibility for supervising work to a licensed contractor who is not licensed to perform the work being done. Any person working on my building who is not licensed must work under my direct supervision and must be employed by me, which means that I must comply with laws requiring the withholding of federal income tax and social security contributions under the Federal Insurance Contributions Act (FICA) and must provide workers' compensation for the employee. I understand that my failure to follow these laws may subject me to serious financial risk.

I agree that, as the party legally and financially responsible for this proposed construction activity, I will abide by all applicable laws and requirements that govern owner-builders as well as employers. I also understand that the construction must comply with all applicable laws, ordinances, building codes, and zoning regulations.

I understand that I may obtain more information regarding my obligations as an employer from the Internal Revenue Service, the United States Small Business Administration, the Florida Department of Financial Services, and the Florida Department of Revenue. I also understand that I may contact the Florida Construction Industry Licensing Board at 850-487-1395 or Internet website address http://www.myflorida.com/dbpr/pro/cilb/index.html for more information about licensed contractors.

I am aware of, and consent to, an owner-builder building permit applied for in my name and understand that I am the party legally and financially responsible for the proposed construction activity at the following address:

1061 SW English St Lake City FL 32025.

I agree to notify Columbia County Building Department immediately of any additions, deletions, or changes to any of the information that I have provided on this disclosure. Licensed contractors are regulated by laws designed to protect the public. If you contract with a person who does not have a license, the Construction Industry Licensing Board and Department of Business and Professional Regulation may be unable to assist you with any financial loss that you sustain as a result of a complaint. Your only remedy against an unlicensed contractor may be in civil court. It is also important for you to understand that, if an unlicensed contractor or employee of an individual of firm is injured while working on your property, you may be held liable for damages. If you obtain an owner-builder permit and wish to hire a licensed contractor, you will be responsible for verifying whether the contractor is properly licensed and the status of the contractor's workers' compensation coverage.

I understand that if I hire subcontractors they must be licensed for that type of work in Columbia County, ex: framing, stucco, masonry, and state registered builders. Registered Contractors must have a minimum of $300,000.00 in General Liability insurance coverage and the proper workers' compensation. Specialty Contractors must have a minimum of $100,000.00 in General Liability insurance coverage and the proper workers' compensation coverage.

Before a building permit can be issued, this disclosure statement must be completed and signed by the property owner and returned to Columbia County Building Department.

TYPE OF CONSTRUCTION

(X) Single Family Dwelling ( ) Two-Family Residence ( ) Farm Outbuilding

( ) Addition, Alteration, Modification or other Improvement

( ) Commercial, Cost of Construction_____ Construction of_____

( ) Other_____

I Michael Henderson, have been advised of the above disclosure statement for exemption from contractor licensing as an owner/builder. I agree to comply with all requirements provided for in Florida Statutes allowing this exception for the construction permitted by Columbia County Building Permit.

X _____ Date 9/14/2011

Owner Builder Signature

NOTARY OF OWNER BUILDER SIGNATURE

The above signer is personally known to me or produced identification _____

Notary Signature _____ Date 9-14-11 (Seal)

LAURIE HODSON
MY COMMISSION # DD 805657
EXPIRES: July 14, 2012
Bonded Thru Notary Public Underwriters

FOR BUILDING DEPARTMENT USE ONLY

I hereby certify that the above listed owner builder has been given notice of the restriction stated above.

Building Official/Representative_____

Revised: 7-23-09
DISCLOSURE STATEMENT 09
Documents: B&Z Forms

PRODUCT APPROVAL SPECIFICATION SHEET

As required by Florida Statute 553.842 and Florida Administrative Code 9B-72, please provide the information and approval numbers on the building components listed below if they will be utilized on the construction project for which you are applying for a building permit. We recommend you contact your local product supplier should you not know the product approval number for any of the applicable listed products. Statewide approved products are listed online @ www.floridabuilding.org

Category/Subcategory	Manufacturer	Product Description	Approved Number (s)
1. EXTERIOR DOORS			
a. SWINGING	Therma-Tru	Ext. Door Swinging	FL 8838.1
b. SLIDING			
c. SECTIONAL/ROLL UP			
d. OTHER			
2. WINDOWS			
a. SINGLE/DOUBLE HUNG	Pella	Proline	FL11502
b. HORIZONTAL SLIDER			
c. CASEMENT			
d. FIXED			
e. MULLION			
f. SKYLIGHTS			
g. OTHER			
3. PANEL WALL			
a. SIDING			
b. SOFFITS			
c. STOREFRONTS			
d. GLASS BLOCK			
e. OTHER			
4. ROOFING PRODUCTS			
a. ASPHALT SHINGLES			
b. NON-STRUCT METAL	Gulf Coast Supply	Metal Roof	FL2632.1
c. ROOFING TILES			
d. SINGLE PLY ROOF			
e. OTHER			
5. STRUCT COMPONENTS			
a. WOOD CONNECTORS	Simpson	Wood Connectors, Anchors	FL503.1
b. WOOD ANCHORS			
c. TRUSS PLATES	MiTek Industries	Truss Plates	FL2197.1
d. INSULATION FORMS			
e. LINTELS			
f. OTHERS			
6. NEW EXTERIOR			
a. ENVELOPE PRODUCTS			

COLUMBIA COUNTY BUILDING DEPARTMENT
Received for FILE COPY
Code Compliance
PLANS EXAMINER

The products listed below did not demonstrate product approval at plan review. I understand that at the time of inspection of these products, the following information must be available to the inspector on the job site: 1) copy of the product approval, 2) performance characteristics which the product was tested and certified to comply with, 3) copy of the applicable manufacturers installation requirements. Further, I understand these products may have to be removed if approval cannot be demonstrated during inspection.

APPLICANT SIGNATURE

DATE

SUBCONTRACTOR VERIFICATION FORM

APPLICATION NUMBER _____ CONTRACTOR owner builder PHONE 904-716-7276
352-473-2890

THIS FORM MUST BE SUBMITTED PRIOR TO THE ISSUANCE OF A PERMIT

In Columbia County one permit will cover all trades doing work at the permitted site. It is REQUIRED that we have records of the subcontractors who actually did the trade specific work under the permit. Per Florida Statute 440 and Ordinance 89-6, a contractor shall require all subcontractors to provide evidence of workers' compensation or exemption, general liability insurance and a valid Certificate of Competency license in Columbia County.

Any changes, the permitted contractor is responsible for the corrected form being submitted to this office prior to the start of that subcontractor beginning any work. Violations will result in stop work orders and/or fines.

ELECTRICAL	Print Name Michael Henderson License #: owner/builder	Signature Phone #: 904-716-7276
MECHANICAL/ A/C _____	Print Name License #:	Signature Phone #:
PLUMBING/ GAS	Print Name License #:	Signature Phone #:
ROOFING	Print Name License #:	Signature Phone #:
SHEET METAL	Print Name License #:	Signature Phone #:
FIRE SYSTEM/ SPRINKLER	Print Name License#:	Signature Phone #:
SOLAR	Print Name License #:	Signature Phone #:

Specialty License	License Number	Sub-Contractors Printed Name	Sub-Contractors Signature
MASON	owner builder	Michael Henderson	
CONCRETE FINISHER			
FRAMING			
INSULATION			
STUCCO			
DRYWALL			
PLASTER			
CABINET INSTALLER			
PAINTING			
ACOUSTICAL CEILING			
GLASS			
CERAMIC TILE			
FLOOR COVERING			
ALUM/VINYL SIDING			
GARAGE DOOR			
METAL BLDG ERECTOR			

F. S. 440.103 Building permits; identification of minimum premium policy.--Every employer shall, as a condition to applying for and receiving a building permit, show proof and certify to the permit issuer that it has secured compensation for its employees under this chapter as provided in ss. 440.10 and 440.38, and shall be presented each time the employer applies for a building permit.

FORM 1100A-08

FLORIDA ENERGY EFFICIENCY CODE FOR BUILDING CONSTRUCTION

Florida Department of Community Affairs Residential Performance Method A

Project Name:	Henderson Res	Builder Name:	N/A
Street:	1061 SW English Street	Permit Office:	Columbia County
City, State, Zip:	Lake City , FL , 32025-	Permit Number:	29696
Owner:	Michael & Janet Henderson	Jurisdiction:	221000
Design Location:	FL, Gainesville		

1. New construction or existing	New (From Plans)
2. Single family or multiple family	Single-family
3. Number of units, if multiple family	1
4. Number of Bedrooms	3
5. Is this a worst case?	No
6. Conditioned floor area (ft²)	1780

7. Windows (189.0 sqft.)	Description	Area
a. U-Factor:	Dbl, U=0.30	189.00 ft²
SHGC:	SHGC=0.50	
b. U-Factor:	N/A	ft²
SHGC:		
c. U-Factor:	N/A	ft²
SHGC:		
d. U-Factor:	N/A	ft²
SHGC:		
e. U-Factor:	N/A	ft²
SHGC:		

8. Floor Types (1780.0 sqft.)	Insulation	Area
a. Crawlspace	R=19.0	1780.00 ft²
b. N/A	R=	ft²
c. N/A	R=	ft²

9. Wall Types (1408.0 sqft.)	Insulation	Area
a. Log - 6 inch, Exterior	R=8.4	1408.00 ft²
b. N/A	R=	ft²
c. N/A	R=	ft²
d. N/A	R=	ft²

10. Ceiling Types (1958.0 sqft.)	Insulation	Area
a. Under Attic (Vented)	R=30.0	1958.00 ft²
b. N/A	R=	ft²
c. N/A	R=	ft²

11. Ducts
a. Sup: Interior Ret: Interior AH: Interior Sup. R= 6, 445 ft²

12. Cooling systems
a. Central Unit — Cap: 23.9 kBtu/hr, SEER: 14

13. Heating systems
a. Electric Heat Pump — Cap: 23.9 kBtu/hr, HSPF: 7.7

14. Hot water systems
a. Electric — Cap: 50 gallons, EF: 0.92

b. Conservationfeatures
None

15. Credits — None

Glass/Floor Area: 0.106

Total As-Built Modified Loads: 41.34
Total Baseline Loads: 48.77

PASS

I hereby certify that the plans and specifications covered by this calculation are in compliance with the Florida Energy Code.

PREPARED BY: _____
DATE: 9/7/11

I hereby certify that this building, as designed, is in compliance with the Florida Energy Code.

OWNER/AGENT: _____
DATE: _____

Review of the plans and specifications covered by this calculation indicates compliance with the Florida Energy Code. Before construction is completed this building will be inspected for compliance with Section 553.908 Florida Statutes.

BUILDING OFFICIAL: _____
DATE: _____

COLUMBIA COUNTY BUILDING DEPARTMENT
Received for FILE COPY
Code Compliance
PLANS EXAMINER

PROJECT

Title:	Henderson Res	Bedrooms:	3	Adress Type:	
Building Type:	FLAsBuilt	Conditioned Area:	1780	Lot #	
Owner:	Michael & Janet Henderson	Total Stories:	1	Block/SubDivision:	
# of Units:	1	Worst Case:	No	PlatBook:	
Builder Name:	N/A	Rotate Angle:	0	Street:	1061 SW English Street
Permit Office:	Columbia County	Cross Ventilation:		County:	Columbia
Jurisdiction:		Whole House Fan:		City, State, Zip:	Lake City , FL , 32025-
Family Type:	Single-family				
New/Existing:	New (From Plans)				
Comment:					

CLIMATE

√	Design Location	TMY Site	IECC Zone	Design Temp 97.5 %	Design Temp 2.5 %	Int Design Temp Winter	Int Design Temp Summer	Heating Degree Days	Design Moisture	Daily Temp Range
____	FL, Gainesville	FL_GAINESVILLE_REGI	2	32	92	75	70	1305.5	51	Medium

FLOORS

√	#	Floor Type	Exposed Perimeter	Wall Ins. R-Value	Area	Floor Joist R-Value	Tile	Wood	Carpet
____	1	Crawlspace	176 ft	5	1780 ft²	19	0	0	1

ROOF

√	#	Type	Materials	Roof Area	Gable Area	Roof Color	Solar Absor.	Tested	Deck Insul.	Pitch
____	1	Hip	Metal	1991 ft²	0 ft²	Light	0.96	No	0	26.6 deg

ATTIC

√	#	Type	Ventilation	Vent Ratio (1 in)	Area	RBS	IRCC
____	1	Full attic	Vented	303	1780 ft²	N	N

CEILING

√	#	Ceiling Type	R-Value	Area	Framing Frac	Truss Type
____	1	Under Attic (Vented)	30	1958 ft²	0.11	Wood

WALLS

√	#	Ornt	Adjacent To	Wall Type	Cavity R-Value	Area	Sheathing R-Value	Framing Fraction	Solar Absor.
____	1	E	Exterior	Log - 6 inch	8.4	1408 ft²	0	0	0.75

DOORS

√	#	Ornt	Door Type	Storms	U-Value	Area
____	1	E	Insulated	None	0.460000	20 ft²
____	2	E	Insulated	None	0.460000	20 ft²

WINDOWS

Orientation shown is the entered, asBuilt orientation.

√	#	Ornt	Frame	Panes	NFRC	U-Factor	SHGC	Storms	Area	Overhang Depth	Overhang Separation	Int Shade	Screening
____	1	E	Wood	Low-E Double	Yes	0.3	0.5	N	90 ft²	1 ft 0 in	9 ft 6 in	HERS 2006	None
____	2	E	Wood	Low-E Double	Yes	0.3	0.5	N	30 ft²	1 ft 0 in	9 ft 6 in	HERS 2006	None
____	3	E	Wood	Low-E Double	Yes	0.3	0.5	N	15 ft²	1 ft 0 in	9 ft 6 in	HERS 2006	None
____	4	E	Wood	Low-E Double	Yes	0.3	0.5	N	24 ft²	1 ft 0 in	9 ft 6 in	HERS 2006	None
____	5	E	Wood	Low-E Double	Yes	0.3	0.5	N	30 ft²	1 ft 0 in	9 ft 6 in	HERS 2006	None

INFILTRATION & VENTING

√	Method	SLA	CFM 50	ACH 50	ELA	EqLA	---- Forced Ventilation ---- Supply CFM	Exhaust CFM	Run Time Fraction	Fan Watts
____	Default	0.00036	1681	7.08	92.3	173.5	0 cfm	0 cfm	0	0

COOLING SYSTEM

√	#	System Type	Subtype	Efficiency	Capacity	Air Flow	SHR	Ducts
____	1	Central Unit	None	SEER: 14	23.9 kBtu/hr	cfm	0.75	sys#1

HEATING SYSTEM

√	#	System Type	Subtype	Efficiency	Capacity	Ducts
____	1	Electric Heat Pump	None	HSPF: 7.7	23.9 kBtu/hr	sys#1

HOT WATER SYSTEM

√	#	System Type	EF	Cap	Use	SetPnt	Conservation
____	1	Electric	0.92	50 gal	60 gal	120 deg	None

SOLAR HOT WATER SYSTEM

√	FSEC Cert #	Company Name	System Model #	Collector Model #	Collector Area	Storage Volume	FEF
____	None	None			ft²		

DUCTS

√	#	---- Supply ---- Location	R-Value	Area	---- Return ---- Location	Area	Leakage Type	Air Handler	CFM 25	Percent Leakage	QN	RLF
____	1	Interior	6	445 ft²	Interior	89 ft²	Default Leakage	Interior	(Default) c	(Default) %		

TEMPERATURES

Programable Thermostat: N

Ceiling Fans:

Cooling	[X] Jan	[X] Feb	[X] Mar	[X] Apr	[X] May	[X] Jun	[X] Jul	[X] Aug	[X] Sep	[X] Oct	[X] Nov	[X] Dec
Heating	[X] Jan	[X] Feb	[X] Mar	[X] Apr	[X] May	[X] Jun	[X] Jul	[X] Aug	[X] Sep	[X] Oct	[X] Nov	[X] Dec
Venting	[X] Jan	[X] Feb	[X] Mar	[X] Apr	[X] May	[X] Jun	[X] Jul	[X] Aug	[X] Sep	[X] Oct	[X] Nov	[X] Dec

Thermostat Schedule: HERS 2006 Reference

Schedule Type		Hours 1	2	3	4	5	6	7	8	9	10	11	12
Cooling (WD)	AM	78	78	78	78	78	78	78	78	78	78	78	78
	PM	78	78	78	78	78	78	78	78	78	78	78	78
Cooling (WEH)	AM	78	78	78	78	78	78	78	78	78	78	78	78
	PM	78	78	78	78	78	78	78	78	78	78	78	78
Heating (WD)	AM	68	68	68	68	68	68	68	68	68	68	68	68
	PM	68	68	68	68	68	68	68	68	68	68	68	68
Heating (WEH)	AM	68	68	68	68	68	68	68	68	68	68	68	68
	PM	68	68	68	68	68	68	68	68	68	68	68	68

FORM 1100A-08

Code Compliance Checklist

Residential Whole Building Performance Method A - Details

ADDRESS: 1061 SW English Street
Lake City, FL, 32025-

PERMIT #:

INFILTRATION REDUCTION COMPLIANCE CHECKLIST

COMPONENTS	SECTION	REQUIREMENTS FOR EACH PRACTICE	CHECK
Exterior Windows & Doors	N1106.AB.1.1	Maximum: .3 cfm/sq.ft. window area; .5 cfm/sq.ft. door area.	
Exterior & Adjacent Walls	N1106.AB.1.2	Caulk, gasket, weatherstrip or seal between: windows/doors & frames, surrounding wall; foundation & wall sole or sill plate; joints between exterior wall panels at corners; utility penetrations; between wall panels & top/bottom plates; between walls and floor. EXCEPTION: Frame walls where a continuous infiltration barrier is installed that extends from, and is sealed to, the foundation to the top plate.	
Floors	N1106.AB.1.2	Penetrations/openings > 1/8" sealed unless backed by truss or joint members. EXCEPTION: Frame floors where a continuous infiltration barrier is installed that is sealed to the perimeter, penetrations and seams.	
Ceilings	N1106.AB.1.2	Between walls & ceilings; penetrations of ceiling plane to top floor; around shafts, chases, soffits, chimneys, cabinets sealed to continuous air barrier; gaps in gyp board & top plate; attic access. EXCEPTION: Frame ceilings where a continuous infiltration barrier is installed that is sealed at the perimeter, at penetrations and seams.	
Recessed Lighting Fixtures	N1106.AB.1.2	Type IC rated with no penetrations, sealed; or Type IC or non-IC rated, installed inside a sealed box with 1/2" clearance & 3" from insulation; or Type IC with < 2.0 cfm from conditioned space, tested.	
Multi-story Houses	N1106.AB.1.2	Air barrier on perimeter of floor cavity between floors.	
Additional Infiltration reqts	N1106.AB.1.3	Exhaust fans vented to outdoors, dampers; combustion space heaters comply with NFPA, have combustion air.	

OTHER PRESCRIPTIVE MEASURES (must be met or exceeded by all residences.)

COMPONENTS	SECTION	REQUIREMENTS	CHECK
Water Heaters	N1112.AB.3	Comply with efficiency requirements in Table N1112.ABC.3 Switch or clearly marked circuit breaker (electric) or cutoff (gas) must be provided. External or built-in heat trap required.	
Swimming Pools & Spas	N1112.AB.2.3	Spas & heated pools must have covers (except solar heated). Non-commercial pools must have a pump timer. Gas spa & pool heaters must have a minimum thermal efficiency of 78%. Heat pump pool heaters shall have a minimum COP of 4.0.	
Shower heads	N1112.AB.2.4	Water flow must be restricted to no more than 2.5 gallons per minute at 80 PSIG.	
Air Distribution Systems	N1110.AB	All ducts, fittings, mechanical equipment and plenum chambers shall be mechanically attached, sealed, insulated and installed in accordance with the criteria of Section N1110.AB. Ducts in unconditioned attics: R-6 min. insulation.	
HVAC Controls	N1107.AB.2	Separate readily accessible manual or automatic thermostat for each system.	
Insulation	N1104.AB.1 N1102.B.1.1	Ceilings-Min. R-19. Common walls-frame R-11 or CBS R-3 both sides. Common ceiling & floors R-11.	

ENERGY PERFORMANCE LEVEL (EPL) DISPLAY CARD

ESTIMATED ENERGY PERFORMANCE INDEX* = 85

The lower the EnergyPerformance Index, the more efficient the home.

1061 SW English Street, Lake City, FL, 32025-

1. New construction or existing		New (From Plans)
2. Single family or multiple family		Single-family
3. Number of units, if multiple family		1
4. Number of Bedrooms		3
5. Is this a worst case?		No
6. Conditioned floor area (ft²)		1780
7. Windows**	Description	Area
a. U-Factor:	Dbl, U=0.30	189.00 ft²
SHGC:	SHGC=0.50	
b. U-Factor:	N/A	ft²
SHGC:		
c. U-Factor:	N/A	ft²
SHGC:		
d. U-Factor:	N/A	ft²
SHGC:		
e. U-Factor:	N/A	ft²
SHGC:		

8. Floor Types	Insulation	Area
a. Crawlspace	R=19.0	1780.00 ft²
b. N/A	R=	ft²
c. N/A	R=	ft²

9. Wall Types	Insulation	Area
a. Log - 6 inch, Exterior	R=8.4	1408.00 ft²
b. N/A	R=	ft²
c. N/A	R=	ft²
d. N/A	R=	ft²

10. Ceiling Types	Insulation	Area
a. Under Attic (Vented)	R=30.0	1958.00 ft²
b. N/A	R=	ft²
c. N/A	R=	ft²

11. Ducts
a. Sup: Interior Ret: Interior AH: Interior Sup. R= 6, 445 ft²

12. Cooling systems
a. Central Unit — Cap: 23.9 kBtu/hr, SEER: 14

13. Heating systems
a. Electric Heat Pump — Cap: 23.9 kBtu/hr, HSPF: 7.7

14. Hot water systems
a. Electric — Cap: 50 gallons, EF: 0.92

b. Conservationfeatures
None

15. Credits — None

I certify that this home has complied with the Florida Energy Efficiency Code for Building Construction through the above energy saving features which will be installed (or exceeded) in this home before final inspection. Otherwise, a new EPL Display Card will be completed based on installed Code compliant features.

Builder Signature: _____ Date: _____

Address of New Home: _____ City/FL Zip: _____

*Note: The home's estimated Energy Performance Index is only available through the EnergyGauge USA - FlaRes2008 computer program. This is not a Building Energy Rating. If your Index is below 100, your home may qualify for incentives if you obtain a Florida Energy Gauge Rating. Contact the Energy Gauge Hotline at (321) 638-1492 or see the Energy Gauge web site at energygauge.com for information and a list of certified Raters. For information about Florida's Energy Efficiency Code for Building Construction, contact the

**Label required by Section 13-104.4.5 of the Florida Building Code, Building, or Section B2.1.1 of Appendix G of the Florida Building Code, Residential, if not DEFAULT.

ITW Building Components Group, Inc.

1950 Marley Drive Haines City, FL 33844
Florida Engineering Certificate of Authorization Number: 0 278
Florida Certificate of Product Approval # FL1999
 Document ID:1UFE2327Z0516135406

WILLIAM H. KRICK LICENSE No. 70861 STATE OF FLORIDA PROFESSIONAL ENGINEER
09/16/2011

Truss Fabricator:	Duley Truss
Job Identification:	J0672-CRACKER STYLE LOG HOMES HENDERSON RES. (J0672-CRACKER STYLE LOG HOMES HENDERSON RES.)
Truss Count:	9
Model Code:	Florida Building Code 2007 and 2009 Supplement
Truss Criteria:	FBC2007Res/TPI-2002(STD)
Engineering Software:	Alpine Software,Version 10.02.
Structural Engineer of Record:	The identity of the structural EOR did not exist as of
Address:	the seal date per section 61G15-31.003(5a) of the FAC
Minimum Design Loads:	Roof - 37.0 PSF @ 1.25 Duration Floor - N/A Wind - 110 MPH ASCE 7-05 -Closed

Notes:

1. Determination as to the suitability of these truss components for the structure is the responsibility of the building designer/engineer of record, as defined in ANSI/TPI 1
2. The drawing date shown on this index sheet must match the date shown on the individual truss component drawing.
3. As shown on attached drawings; the drawing number is preceded by: HCUSR2327

William H. Krick
-Truss Design Engineer-

1950 Marley Drive
Haines City, FL 33844

Details: PB120-

#	Ref Description	Drawing#	Date
1	11815--T1	11259041	09/16/11
2	11816--T2	11259042	09/16/11
3	11817--T3	11259043	09/16/11
4	11818--T4	11259044	09/16/11
5	11819--T5	11259045	09/16/11
6	11820--T6	11259046	09/16/11
7	11821--T7	11259047	09/16/11
8	11822--T1CAP	11259048	09/16/11
9	11823--T1CAP2	11259049	09/16/11

COLUMBIA COUNTY BUILDING DEPARTMENT
Received for FILE COPY
Code Compliance
PLANS EXAMINER

(J0672-CRACKER STYLE LOG HOMES HENDERSON RES. - T1)

THIS DWG PREPARED FROM COMPUTER INPUT (LOADS & DIMENSIONS) SUBMITTED BY TRUSS MFR.

Top chord 2x4 SP #2 Dense
Bot chord 2x4 SP #2 Dense
Webs 2x4 SP #3

End verticals not exposed to wind pressure.

In lieu of structural panels or rigid ceiling use purlins to brace all flat TC @ 24" OC, all BC @ 24" OC.

Deflection meets L/360 live and L/240 total load.

110 mph wind, 15.03 ft mean hgt, ASCE 7-05, CLOSED bldg, not located within 4.50 ft from roof edge, CAT II, EXP C, wind TC DL=4.2 psf, wind BC DL=5.0 psf. Iw=1.00 GCpi(+/-)=0.18

Wind loads and reactions based on MWFRS with additional C&C member design.

Bottom chord checked for 10.00 psf non-concurrent live load.

MWFRS loads based on trusses located at least 15.03 ft. from roof edge.

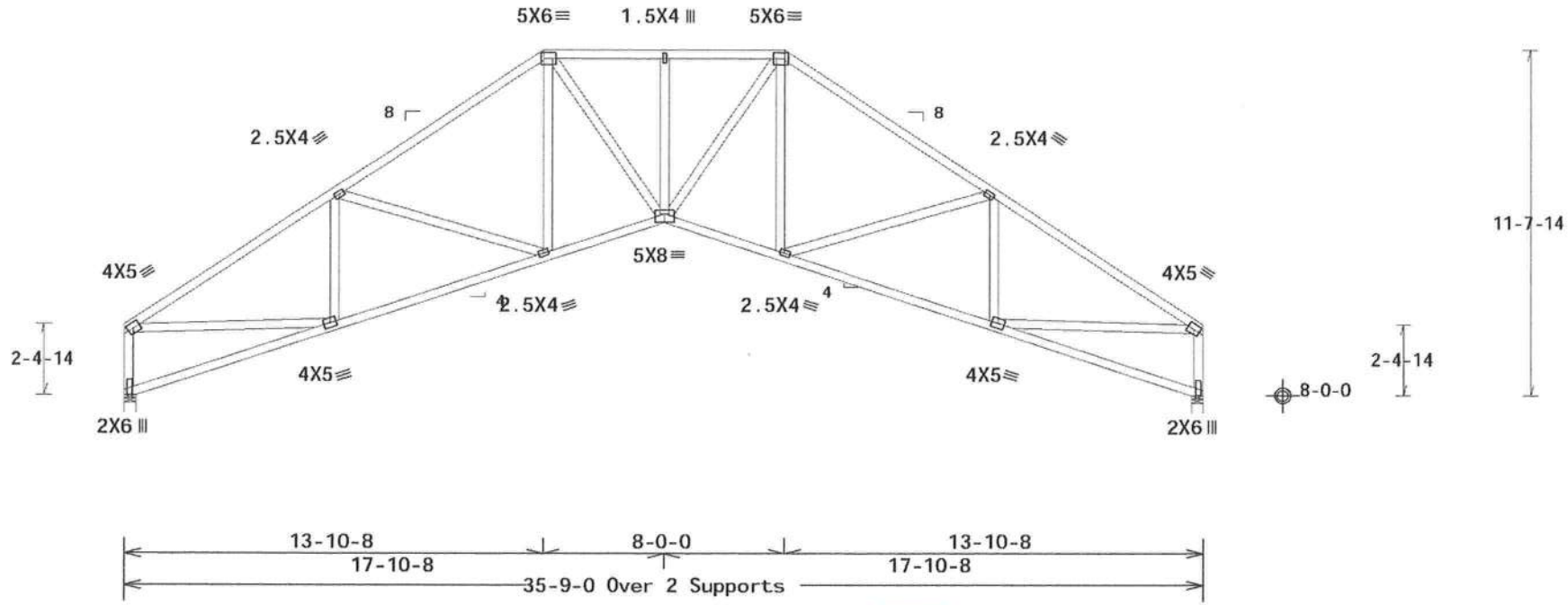

R=1393 U=127 W=4.5"
RL=317/-317

R=1393 U=127 W=4.5"

Design Crit: FBC2007Res/TPI-2002 (STD)
FT/RT=20%(0%)/10(0) 10.02.06.1210.14

PLT TYP. Wave

QTY:11 FL/-/2/-/-/R/-

Scale =.1875"/Ft.

ALPINE
ITW Building Components Group Inc.
Haines City, FL 33844
FL COA #0 278

WARNING READ AND FOLLOW ALL NOTES ON THIS SHEET!
IMPORTANT FURNISH THIS DESIGN TO ALL CONTRACTORS INCLUDING INSTALLERS.

Trusses require extreme care in fabricating, handling, shipping, installing and bracing. Refer to and follow the latest edition of BCSI (Building Component Safety Information, by TPI and WTCA) for safety practices prior to performing these functions. Installers shall provide temporary and permanent bracing per BCSI. Unless noted otherwise, top chord shall have properly attached structural sheathing and bottom chord shall have a properly attached rigid ceiling. Locations shown for permanent lateral restraint of webs shall have bracing installed per BCSI sections B3, B7 or B10, as applicable.

ITW Building Components Group Inc. (ITWBCG) shall not be responsible for any deviation from this design, any failure to build the truss in conformance with ANSI/TPI 1, or for handling, shipping, installation & bracing of trusses. Apply plates to each face of truss and position as shown above and/or on ITWBCG Details, unless noted otherwise. Refer to drawings 160A-Z for standard plate positions. Placement on this drawing or cover page listing this drawing, indicates acceptance of professional engineering responsibility solely for the design shown. The suitability and use of this design for any structure is the responsibility of the Building Designer per ANSI/TPI 1 Sec.2. For more information see: Truss Job general notes page; ITW-BCG: www.itwbcg.com; TPI: www.tpinst.org; WTCA: www.sbcindustry.com; ICC: www.iccsafe.org

WILLIAM H. KRICK LICENSED No. 70861 STATE OF FLORIDA PROFESSIONAL ENGINEER

09/16/2011

TC LL	20.0 PSF	REF	R2327- 11815
TC DL	7.0 PSF	DATE	09/16/11
BC DL	10.0 PSF	DRW	HCUSR2327 11259041
BC LL	0.0 PSF	HC-ENG	SSB/AP *
TOT.LD.	37.0 PSF	SEQN-	462356
DUR.FAC.	1.25	FROM	JRG
SPACING	24.0"	JREF-	1UFE2327Z05

(J0672-CRACKER STYLE LOG HOMES HENDERSON RES. - T2)

Top chord 2x4 SP #2 Dense
Bot chord 2x4 SP #2 Dense
Webs 2x4 SP #3

Special loads
------(Lumber Dur.Fac.=1.25 / Plate Dur.Fac.=1.25)
TC- From 17 plf at 0.00 to 17 plf at 11.88
TC- From 17 plf at 11.88 to 17 plf at 23.88
TC- From 17 plf at 23.88 to 17 plf at 35.75
BC- From 40 plf at 0.00 to 40 plf at 17.88
BC- From 40 plf at 17.88 to 40 plf at 35.75
TC- 300.00 lb Conc. Load at 0.00,35.75

Wind loads and reactions based on MWFRS with additional C&C member design.

Truss passed check for 20 psf additional bottom chord live load in areas with 42"-high x 24"-wide clearance.

IT IS THE RESPONSIBILITY OF THE BUILDING DESIGNER AND TRUSS FABRICATOR TO REVIEW THIS DWG PRIOR TO CUTTING LUMBER TO VERIFY THAT ALL DATA, INCLUDING DIMENSIONS AND LOADS, CONFORM TO THE ARCHITECTURAL PLANS/ SPECIFICATIONS AND FABRICATOR'S TRUSS LAYOUT.

110 mph wind, 15.00 ft mean hgt, ASCE 7-05, CLOSED bldg, Located anywhere in roof, CAT II, EXP C, wind TC DL=4.2 psf, wind BC DL=5.0 psf. Iw=1.00 GCpi(+/-)=0.18

End verticals not exposed to wind pressure.

(a) Continuous lateral bracing equally spaced on member. Or 1x4 #3SRB SPF-S or better "T" brace. 80% length of web member. Attached with 8d Box or Gun (0.113"x2.5",min.)nails @ 6" OC.

(b) Continuous lateral bracing equally spaced on member. Or 2x4 #3 or better "T" brace. 80% length of web member. Attached with 16d Box or Gun (0.135"x3.5",min.)nails @ 6" OC.

In lieu of structural panels or rigid ceiling use purlins to brace all flat TC @ 24" OC, all BC @ 24" OC.

Deflection meets L/360 live and L/240 total load.

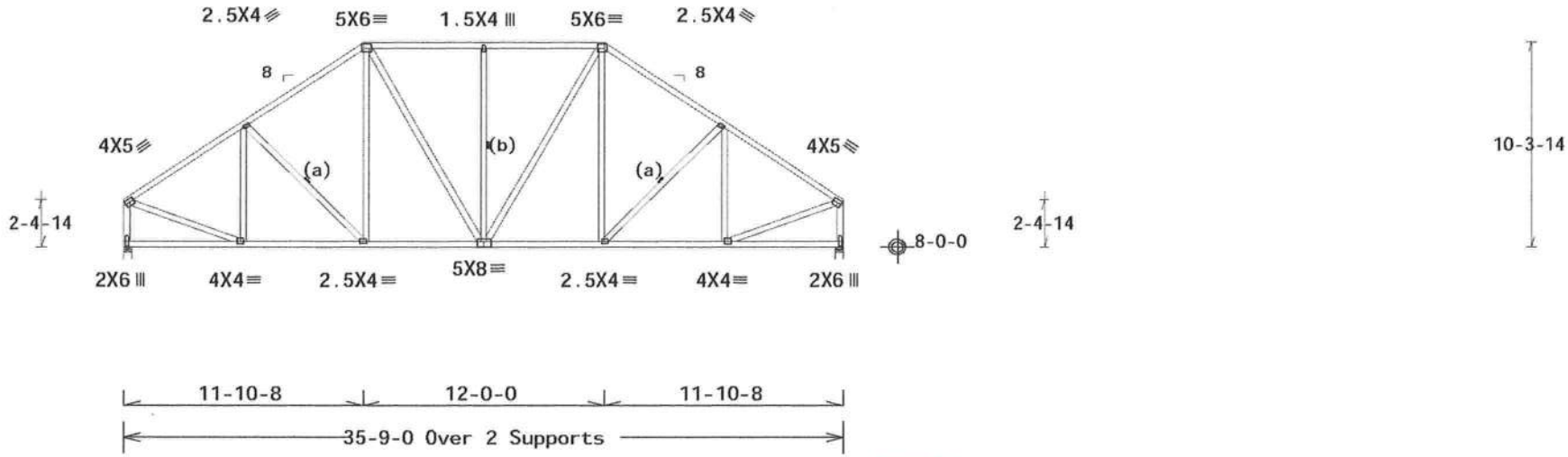

R=1586 U=424 W=4.5"
RL=271/-271

R=1587 U=424 W=4.5"

Design Crit: FBC2007Res/TPI-2002 (STD)
FT/RT=20%(0%)/10(0) 10.02.06.1210.14

PLT TYP. Wave | QTY:2 | FL/-/2/-/-/R/- | Scale =.125"/Ft.

ALPINE
ITW Building Components Group Inc.
Haines City, FL 33844
FL COA #0 278

WARNING READ AND FOLLOW ALL NOTES ON THIS SHEET!
IMPORTANT FURNISH THIS DESIGN TO ALL CONTRACTORS INCLUDING INSTALLERS.

Trusses require extreme care in fabricating, handling, shipping, installing and bracing. Refer to and follow the latest edition of BCSI (Building Component Safety Information, by TPI and WTCA) for safety practices prior to performing these functions. Installers shall provide temporary and permanent bracing per BCSI. Unless noted otherwise, top chord shall have properly attached structural sheathing and bottom chord shall have a properly attached rigid ceiling. Locations shown for permanent lateral restraint of web members shall have bracing installed per BCSI sections B3, B7 or B10, as applicable.

ITW Building Components Group Inc. (ITWBCG) shall not be responsible for any deviation from this design, any failure to build the truss in conformance with ANSI/TPI 1, or for handling, shipping, installation and bracing of trusses. Apply plates to each face of truss and position as shown above and/or as noted on Details, unless noted otherwise. Refer to drawings 160A-Z for standard plate positions. The seal on this drawing or cover page listing this drawing, indicates acceptance of professional engineering responsibility solely for the design shown. The suitability and use of this design for any structure is the responsibility of the Building Designer per ANSI/TPI 1 Sec.2. For more information see: for job general notes page; ITW-BCG: www.itwbcg.com; TPI: www.tpinst.org; WTCA: www.sbcindustry.com; ICC: www.iccsafe.org

WILLIAM H. KRICK LICENSE No. 70861 STATE OF FLORIDA PROFESSIONAL ENGINEER

09/16/2011

TC LL	20.0 PSF	REF	R2327- 11816
TC DL	7.0 PSF	DATE	09/16/11
BC DL	10.0 PSF	DRW	HCUSR2327 11259042
BC LL	0.0 PSF	HC-ENG	SSB/AP
TOT.LD.	37.0 PSF	SEQN-	461283
DUR.FAC.	1.25	FROM	JRG
SPACING	24.0"	JREF-	1UFE2327Z05

(J0672-CRACKER STYLE LOG HOMES HENDERSON RES. - T3)

Top chord 2x4 SP #2 Dense
Bot chord 2x4 SP #2 Dense
Webs 2x4 SP #3

Special loads
------(Lumber Dur.Fac.=1.25 / Plate Dur.Fac.=1.25)
TC- From 17 plf at 0.00 to 17 plf at 9.88
TC- From 17 plf at 9.88 to 17 plf at 25.88
TC- From 17 plf at 25.88 to 17 plf at 35.75
BC- From 40 plf at 0.00 to 40 plf at 17.88
BC- From 40 plf at 17.88 to 40 plf at 35.75
TC- 300.00 lb Conc. Load at 0.00,35.75

Wind loads and reactions based on MWFRS with additional C&C member design.

Truss passed check for 20 psf additional bottom chord live load in areas with 42"-high x 24"-wide clearance.

IT IS THE RESPONSIBILITY OF THE BUILDING DESIGNER AND TRUSS FABRICATOR TO REVIEW THIS DWG PRIOR TO CUTTING LUMBER TO VERIFY THAT ALL DATA, INCLUDING DIMENSIONS AND LOADS, CONFORM TO THE ARCHITECTURAL PLANS/ SPECIFICATIONS AND FABRICATOR'S TRUSS LAYOUT.

110 mph wind, 15.00 ft mean hgt, ASCE 7-05, CLOSED bldg, Located anywhere in roof, CAT II, EXP C, wind TC DL=4.2 psf, wind BC DL=5.0 psf. Iw=1.00 GCpi(+/-)=0.18

End verticals not exposed to wind pressure.

(b) Continuous lateral bracing equally spaced on member. Or 1x4 #3SRB SPF-S or better "T" brace. 80% length of web member. Attached with 8d Box or Gun (0.113"x2.5",min.)nails @ 6" OC.

(a) Continuous lateral bracing equally spaced on member. Or 2x6 #3 or better "T" brace. 80% length of web member. Attached with 16d Box or Gun (0.135"x3.5",min.)nails @ 6" OC.

In lieu of structural panels or rigid ceiling use purlins to brace all flat TC @ 24" OC, all BC @ 24" OC.

Deflection meets L/360 live and L/240 total load.

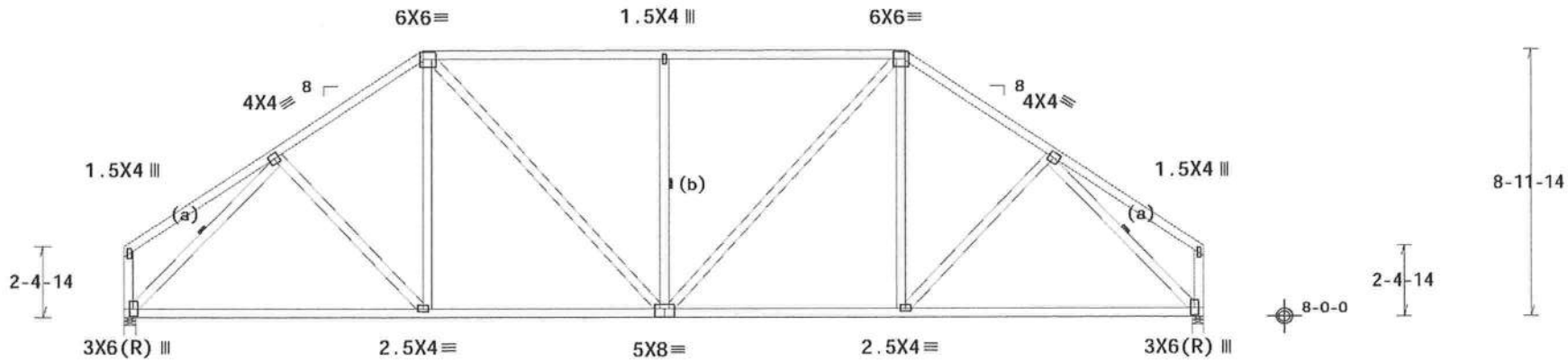

R=1643 U=424 W=4.5"
RL=225/-225

R=1644 U=424 W=4.5"

Design Crit: FBC2007Res/TPI-2002(STD)
FT/RT=20%(0%)/10(0)

PLT TYP. Wave | 10.02.06.1210.14 | QTY:2 | FL/-/2/-/-/R/- | Scale =.1875"/Ft.

ALPINE
ITW Building Components Group Inc.
Haines City, FL 33844
FL COA #0 278

WARNING READ AND FOLLOW ALL NOTES ON THIS SHEET!
IMPORTANT FURNISH THIS DESIGN TO ALL CONTRACTORS INCLUDING INSTALLERS.

Trusses require extreme care in fabricating, handling, shipping, installing and bracing. Refer to and follow the latest edition of BCSI (Building Component Safety Information, by TPI and WTCA) for safety practices prior to performing these functions. Installers shall provide temporary bracing per BCSI. Unless noted otherwise, top chord shall have properly attached structural sheathing and bottom chord shall have a properly attached rigid ceiling. Locations shown for permanent lateral restraint of webs shall have bracing installed per BCSI sections B3, B7 or B10, as applicable.

ITW Building Components Group Inc. (ITWBCG) shall not be responsible for any deviation from this drawing, any failure to build the truss in conformance with ANSI/TPI 1, or for handling, shipping, installation and bracing of trusses. Apply plates to each face of truss and position as shown above and/or on the joint Details, unless noted otherwise. Refer to drawings 160A-Z for standard plate positions. Review of this drawing or cover page listing this drawing, indicates acceptance of professional engineering responsibility solely for the design shown. The suitability and use of this design for any structure is the responsibility of the Building Designer per ANSI/TPI 1 Sec.2. For more information see: This company's general notes page; ITW-BCG: www.itwbcg.com; TPI: www.tpinst.org; WTCA: www.sbcindustry.com; ICC: www.iccsafe.org

WILLIAM H. KRICK LICENSE No. 70861 STATE OF FLORIDA PROFESSIONAL ENGINEER

09/16/2011

TC LL	20.0 PSF	REF	R2327- 11817
TC DL	7.0 PSF	DATE	09/16/11
BC DL	10.0 PSF	DRW	HCUSR2327 11259043
BC LL	0.0 PSF	HC-ENG	SSB/AP
TOT.LD.	37.0 PSF	SEQN-	461289
DUR.FAC.	1.25	FROM	JRG
SPACING	24.0"	JREF-	1UFE2327Z05

(J0672-CRACKER STYLE LOG HOMES HENDERSON RES. - T4)

Top chord 2x4 SP #2 Dense
Bot chord 2x4 SP #2 Dense
Webs 2x4 SP #3

Special loads
------(Lumber Dur.Fac.=1.25 / Plate Dur.Fac.=1.25)
TC- From 17 plf at 0.00 to 17 plf at 7.88
TC- From 17 plf at 7.88 to 17 plf at 27.88
TC- From 17 plf at 27.88 to 17 plf at 35.75
BC- From 40 plf at 0.00 to 40 plf at 17.88
BC- From 40 plf at 17.88 to 40 plf at 35.75
TC- 300.00 lb Conc. Load at 0.00,35.75

Wind loads and reactions based on MWFRS with additional C&C member design.

Deflection meets L/360 live and L/240 total load.

IT IS THE RESPONSIBILITY OF THE BUILDING DESIGNER AND TRUSS FABRICATOR TO REVIEW THIS DWG PRIOR TO CUTTING LUMBER TO VERIFY THAT ALL DATA, INCLUDING DIMENSIONS AND LOADS, CONFORM TO THE ARCHITECTURAL PLANS/ SPECIFICATIONS AND FABRICATOR'S TRUSS LAYOUT.

110 mph wind, 15.00 ft mean hgt, ASCE 7-05, CLOSED bldg, Located anywhere in roof, CAT II, EXP C, wind TC DL=4.2 psf, wind BC DL=5.0 psf, Iw=1.00 GCpi(+/-)=0.18

End verticals not exposed to wind pressure.

(a) Continuous lateral bracing equally spaced on member. Or 1x4 #3SRB SPF-S or better "T" brace. 80% length of web member. Attached with 8d Box or Gun (0.113"x2.5",min.)nails @ 6" OC.

In lieu of structural panels or rigid ceiling use purlins to brace all flat TC @ 24" OC, all BC @ 24" OC.

Truss passed check for 20 psf additional bottom chord live load in areas with 42"-high x 24"-wide clearance.

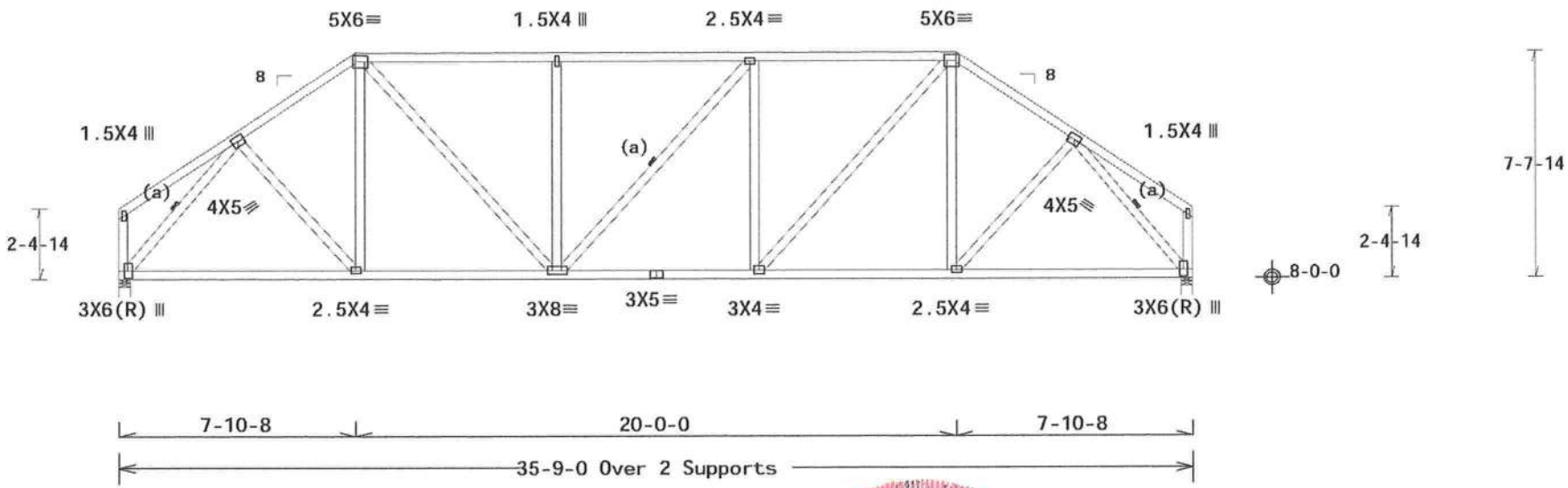

Design Crit: FBC2007Res/TPI-2002(STD)

PLT TYP. Wave | FT/RT=20%(0%)/10(0) | 10.02.06.1210.14 | QTY:2 | FL/-/2/-/-/R/- | Scale =.1875"/Ft.

ALPINE
ITW Building Components Group Inc.
Haines City, FL 33844
FL COA #0278

WARNING READ AND FOLLOW ALL NOTES ON THIS SHEET!
IMPORTANT FURNISH THIS DESIGN TO ALL CONTRACTORS INCLUDING INSTALLERS.

Trusses require extreme care in fabricating, handling, shipping, installing and bracing. Refer to and follow the latest edition of BCSI (Building Component Safety Information, by TPI and WTCA) for safety practices prior to performing these functions. Installers shall provide temporary bracing per BCSI. Unless noted otherwise, top chord shall have properly attached structural sheathing and bottom chord shall have a properly attached rigid ceiling. Locations shown for permanent lateral restraint of web shall have bracing installed per BCSI sections B3, B7 or B10, as applicable.

ITW Building Components Group Inc. (ITWBCG) shall not be responsible for any deviation from this design, any failure to build the truss in conformance with ANSI/TPI 1, or for handling, shipping, installing and bracing of trusses. Apply plates to each face of truss and position as shown above and on the Joint Details, unless noted otherwise. Refer to drawings 160A-Z for standard plate positions. A seal on this drawing or cover page listing this drawing, indicates acceptance of professional engineering responsibility solely for the design shown. The suitability and use of this design for any structure is the responsibility of the Building Designer per ANSI/TPI 1 Sec.2. For more information see: This job's general notes page; ITW-BCG: www.itwbcg.com; TPI: www.tpinst.org; WTCA: www.sbcindustry.com; ICC: www.iccsafe.org

WILLIAM H. KRICK LICENSE No. 70861 STATE OF FLORIDA PROFESSIONAL ENGINEER

09/16/2011

TC LL	20.0 PSF	REF	R2327- 11818
TC DL	7.0 PSF	DATE	09/16/11
BC DL	10.0 PSF	DRW	HCUSR2327 11259044
BC LL	0.0 PSF	HC-ENG	SSB/AP
TOT.LD.	37.0 PSF	SEQN-	461292
DUR.FAC.	1.25	FROM	JRG
SPACING	24.0"	JREF-	1UFE2327Z05

(J0672-CRACKER STYLE LOG HOMES HENDERSON RES. - T5)

THIS DWG PREPARED FROM COMPUTER INPUT (LOADS & DIMENSIONS) SUBMITTED BY TRUSS MFR.

Top chord 2x4 SP #2 Dense
Bot chord 2x4 SP #2 Dense
Webs 2x4 SP #3

Special loads
------(Lumber Dur.Fac.=1.25 / Plate Dur.Fac.=1.25)
TC- From 17 plf at 0.00 to 17 plf at 5.88
TC- From 17 plf at 5.88 to 17 plf at 19.88
TC- From 17 plf at 19.88 to 17 plf at 29.88
TC- From 17 plf at 29.88 to 17 plf at 35.75
BC- From 40 plf at 0.00 to 40 plf at 17.88
BC- From 40 plf at 17.88 to 40 plf at 35.75
TC- 300.00 lb Conc. Load at 0.00,35.75

Wind loads and reactions based on MWFRS with additional C&C member design.

IT IS THE RESPONSIBILITY OF THE BUILDING DESIGNER AND TRUSS FABRICATOR TO REVIEW THIS DWG PRIOR TO CUTTING LUMBER TO VERIFY THAT ALL DATA, INCLUDING DIMENSIONS AND LOADS, CONFORM TO THE ARCHITECTURAL PLANS/ SPECIFICATIONS AND FABRICATOR'S TRUSS LAYOUT.

110 mph wind, 15.00 ft mean hgt, ASCE 7-05, CLOSED bldg, Located anywhere in roof, CAT II, EXP C, wind TC DL=4.2 psf, wind BC DL=5.0 psf. Iw=1.00 GCpi(+/-)=0.18

End verticals not exposed to wind pressure.

(a) Continuous lateral bracing equally spaced on member. Or 2x4 #3 or better "T" brace. 80% length of web member. Attached with 16d Box or Gun (0.135"x3.5",min.)nails @ 6" OC.

In lieu of structural panels or rigid ceiling use purlins to brace all flat TC @ 24" OC, all BC @ 24" OC.

Truss passed check for 20 psf additional bottom chord live load in areas with 42"-high x 24"-wide clearance.

Deflection meets L/360 live and L/240 total load.

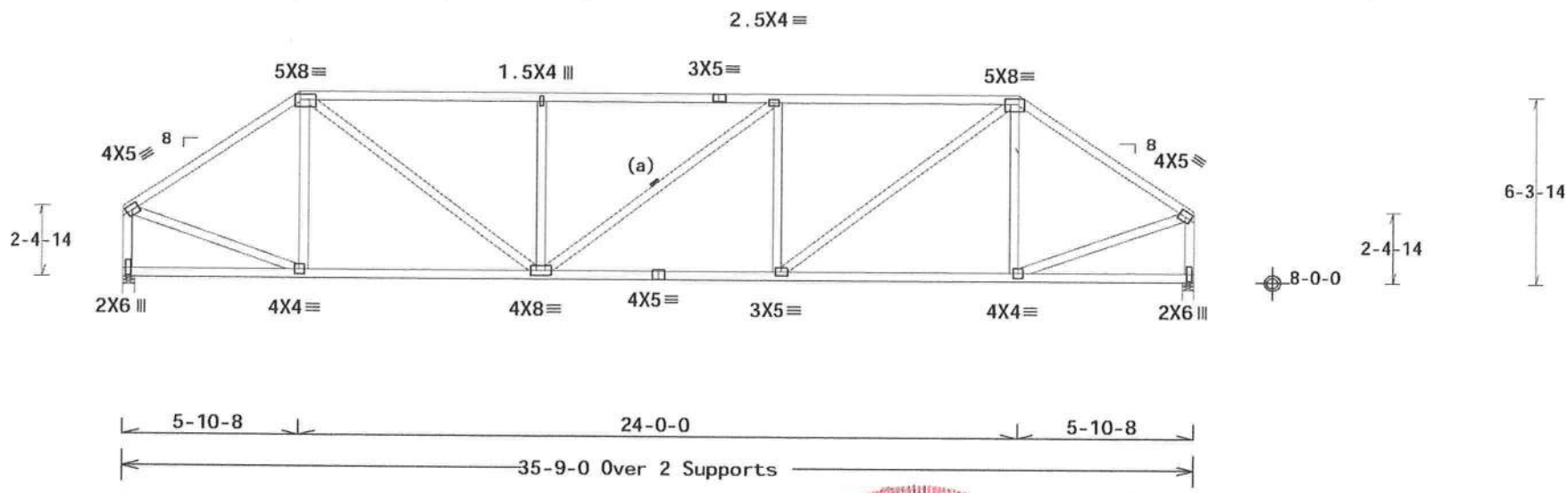

Design Crit: FBC2007Res/TPI-2002(STD)

PLT TYP. Wave FT/RT=20%(0%)/10(0) 10.02.06.1210.14 QTY:2 FL/-/2/-/-/R/- Scale =.1875"/Ft.

ALPINE
ITW Building Components Group Inc.
Haines City, FL 33844
FL COA #0 278

WARNING READ AND FOLLOW ALL NOTES ON THIS SHEET!
IMPORTANT FURNISH THIS DESIGN TO ALL CONTRACTORS INCLUDING INSTALLERS.

Trusses require extreme care in fabricating, handling, shipping, installing and bracing. Refer to and follow the latest edition of BCSI (Building Component Safety Information, by TPI and TCA) for safety practices prior to performing these functions. Installers shall provide temporary bracing per BCSI. Unless noted otherwise, top chord shall have properly attached structural sheathing and bottom chord shall have a properly attached rigid ceiling. Locations shown for permanent lateral restraint of webs shall have bracing installed per BCSI sections B3, B7 or B10, as applicable.

ITW Building Components Group Inc. (ITWBCG) shall not be responsible for any deviation from this design, any failure to build the truss in conformance with ANSI/TPI 1, or for handling, shipping, installation and bracing of trusses. Apply plates to each face of truss and position as shown above and on the Joint Details, unless noted otherwise. Refer to drawings 160A-Z for standard plate positions. A seal on this drawing or cover page listing this drawing, indicates acceptance of professional engineering responsibility solely for the design shown. The suitability and use of this design for any structure is the responsibility of the Building Designer per ANSI/TPI 1 Sec.2. For more information see: This general notes page; ITW-BCG: www.itwbcg.com; TPI: www.tpinst.org; WTCA: www.sbcindustry.com; ICC: www.iccsafe.org

WILLIAM H. KRICK LICENSE No. 70861 STATE OF FLORIDA PROFESSIONAL ENGINEER

09/16/2011

TC LL	20.0 PSF	REF	R2327- 11819
TC DL	7.0 PSF	DATE	09/16/11
BC DL	10.0 PSF	DRW	HCUSR2327 11259045
BC LL	0.0 PSF	HC-ENG	SSB/AP
TOT.LD.	37.0 PSF	SEQN-	461295
DUR.FAC.	1.25	FROM	JRG
SPACING	24.0"	JREF-	1UFE2327Z05

(J0672-CRACKER STYLE LOG HOMES HENDERSON RES. - T6)

Top chord 2x4 SP #2 Dense
Bot chord 2x4 SP #2 Dense
Webs 2x4 SP #3

Special loads
------(Lumber Dur.Fac.=1.25 / Plate Dur.Fac.=1.25)
TC- From 17 plf at 0.00 to 17 plf at 3.88
TC- From 17 plf at 3.88 to 17 plf at 17.88
TC- From 17 plf at 17.88 to 17 plf at 31.88
TC- From 17 plf at 31.88 to 17 plf at 35.75
BC- From 40 plf at 0.00 to 40 plf at 17.88
BC- From 40 plf at 17.88 to 40 plf at 35.75
TC- 300.00 lb Conc. Load at 0.00,35.75

Wind loads and reactions based on MWFRS with additional C&C member design.

IT IS THE RESPONSIBILITY OF THE BUILDING DESIGNER AND TRUSS FABRICATOR TO REVIEW THIS DWG PRIOR TO CUTTING LUMBER TO VERIFY THAT ALL DATA, INCLUDING DIMENSIONS AND LOADS, CONFORM TO THE ARCHITECTURAL PLANS/ SPECIFICATIONS AND FABRICATOR'S TRUSS LAYOUT.

110 mph wind, 15.00 ft mean hgt, ASCE 7-05, CLOSED bldg, Located anywhere in roof, CAT II, EXP C, wind TC DL=4.2 psf, wind BC DL=5.0 psf, Iw=1.00 GCpi(+/-)=0.18

End verticals not exposed to wind pressure.

In lieu of structural panels or rigid ceiling use purlins to brace all flat TC @ 24" OC, all BC @ 24" OC.

Deflection meets L/360 live and L/240 total load.

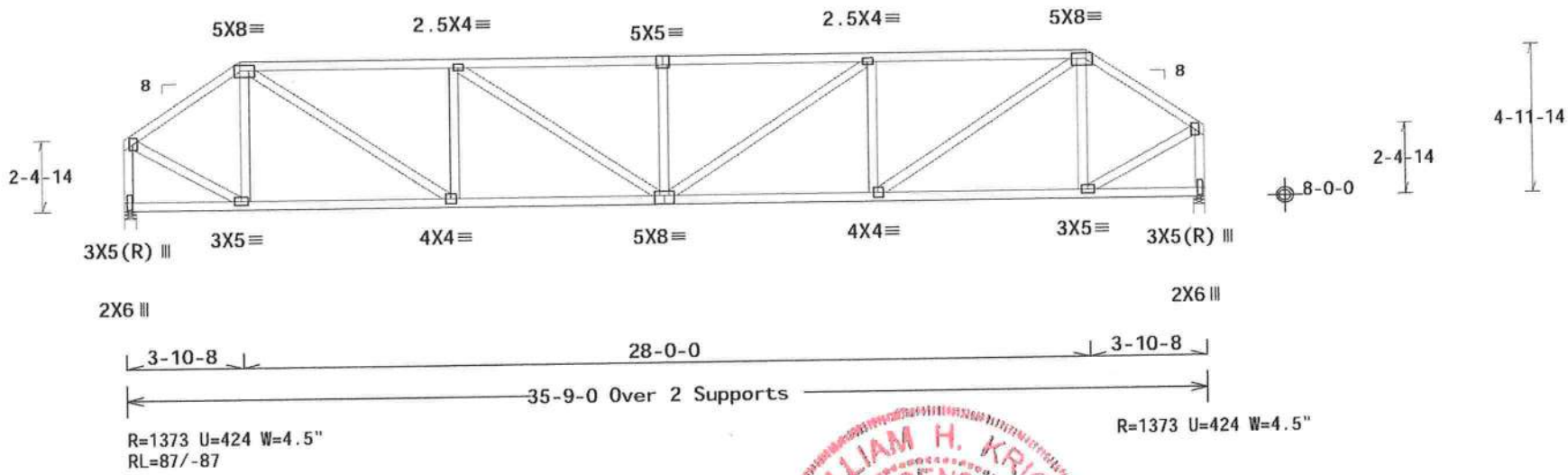

Design Crit: FBC2007Res/TPI-2002(STD)
FT/RT=20%(0%)/10(0)

10.02.06.1210.14

QTY:2 FL/-/2/-/-/R/-

Scale =.1875"/Ft.

PLT TYP. Wave

ALPINE
ITW Building Components Group Inc.
Haines City, FL 33844
FL COA #0 278

WARNING READ AND FOLLOW ALL NOTES ON THIS SHEET!
IMPORTANT FURNISH THIS DESIGN TO ALL CONTRACTORS INCLUDING INSTALLERS.

Trusses require extreme care in fabricating, handling, shipping, installing and bracing. Refer to and follow the latest edition of BCSI (Building Component Safety Information, by TPI and SBCA) for safety practices prior to performing these functions. Installers shall provide temporary bracing per BCSI. Unless noted otherwise, top chord shall have properly attached structural sheathing and bottom chord shall have a properly attached rigid ceiling. Locations shown for permanent lateral restraint of webs shall have bracing installed per BCSI sections B3, B7 or B10, as applicable.

ITW Building Components Group Inc. (ITWBCG) shall not be responsible for any deviation from this design, any failure to build the truss in conformance with ANSI/TPI 1, or for handling, shipping, installation and bracing of trusses. Apply plates to each face of truss and position as shown above and on the Joint Details, unless noted otherwise. Refer to drawings 160A-Z for standard plate positions. A seal on this drawing or cover page listing this drawing, indicates acceptance of professional engineering responsibility solely for the design shown. The suitability and use of this design for any structure is the responsibility of the Building Designer per ANSI/TPI 1 Sec.2. For more information see: This job's general notes page; ITW-BCG: www.itwbcg.com; TPI: www.tpinst.org; WTCA: www.sbcindustry.com; ICC: www.iccsafe.org

WILLIAM H. KRICK LICENSE No. 70851 STATE OF FLORIDA PROFESSIONAL ENGINEER

09/16/2011

TC LL	20.0 PSF	REF	R2327- 11820
TC DL	7.0 PSF	DATE	09/16/11
BC DL	10.0 PSF	DRW	HCUSR2327 11259046
BC LL	0.0 PSF	HC-ENG	SSB/AP
TOT.LD.	37.0 PSF	SEQN-	461298
DUR.FAC.	1.25	FROM	JRG
SPACING	24.0"	JREF-	1UFE2327Z05

(J0672-CRACKER STYLE LOG HOMES HENDERSON RES. - T7)

Top chord 2x4 SP #2 Dense
Bot chord 2x4 SP #2 Dense
Webs 2x4 SP #3

Special loads
------(Lumber Dur.Fac.=1.25 / Plate Dur.Fac.=1.25)
TC- From 17 plf at 0.00 to 17 plf at 1.88
TC- From 17 plf at 1.88 to 17 plf at 19.88
TC- From 17 plf at 19.88 to 17 plf at 33.88
TC- From 17 plf at 33.88 to 17 plf at 35.75
BC- From 40 plf at 0.00 to 40 plf at 17.88
BC- From 40 plf at 17.88 to 40 plf at 35.75
TC- 300.00 lb Conc. Load at 0.00,35.75

Wind loads and reactions based on MWFRS with additional C&C member design.

IT IS THE RESPONSIBILITY OF THE BUILDING DESIGNER AND TRUSS FABRICATOR TO REVIEW THIS DWG PRIOR TO CUTTING LUMBER TO VERIFY THAT ALL DATA, INCLUDING DIMENSIONS AND LOADS, CONFORM TO THE ARCHITECTURAL PLANS/ SPECIFICATIONS AND FABRICATOR'S TRUSS LAYOUT.

110 mph wind, 15.00 ft mean hgt, ASCE 7-05, CLOSED bldg, Located anywhere in roof, CAT II, EXP C, wind TC DL=4.2 psf, wind BC DL=5.0 psf, Iw=1.00 GCpi(+/-)=0.18

End verticals not exposed to wind pressure.

In lieu of structural panels or rigid ceiling use purlins to brace all flat TC @ 24" OC, all BC @ 24" OC.

Deflection meets L/360 live and L/240 total load.

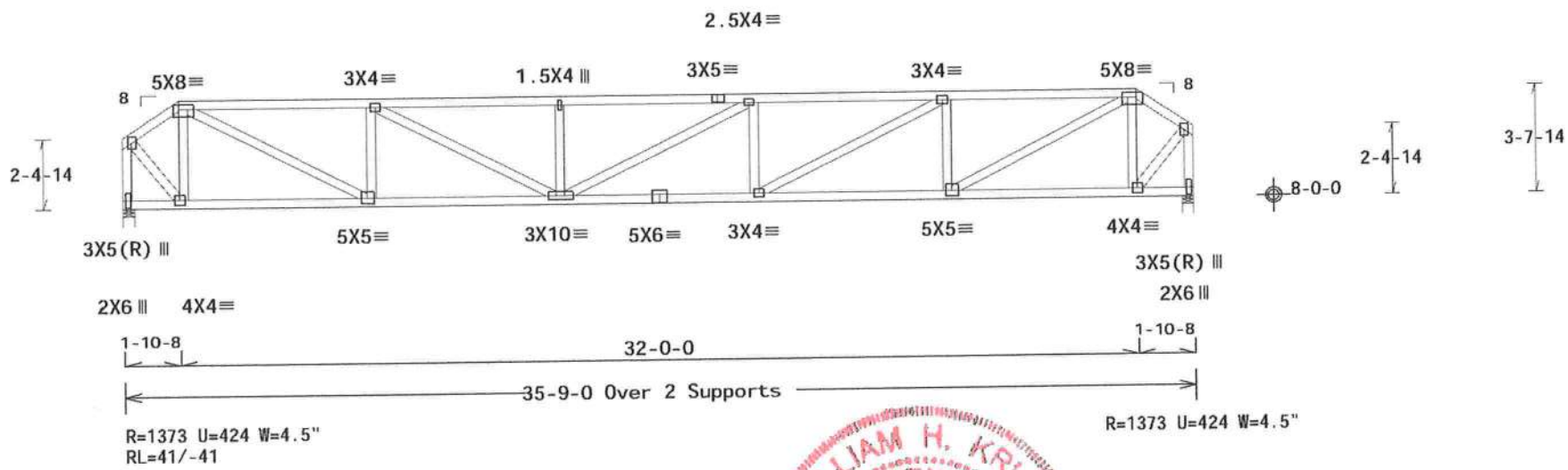

Design Crit: FBC2007Res/TPI-2002(STD)
FT/RT=20%(0%)/10(0) 10/02.06.1210.14

PLT TYP. Wave

QTY:2 FL/-/2/-/-/R/- Scale =.1875"/Ft.

TC LL	20.0 PSF	REF	R2327- 11821
TC DL	7.0 PSF	DATE	09/16/11
BC DL	10.0 PSF	DRW	HCUSR2327 11259047
BC LL	0.0 PSF	HC-ENG	SSB/AP
TOT.LD.	37.0 PSF	SEQN-	461301
DUR.FAC.	1.25	FROM	JRG
SPACING	24.0"	JREF-	1UFE2327Z05

ALPINE
ITW Building Components Group Inc.
Haines City, FL 33844
FL COA #0278

WARNING READ AND FOLLOW ALL NOTES ON THIS SHEET!
IMPORTANT FURNISH THIS DESIGN TO ALL CONTRACTORS INCLUDING INSTALLERS.

Trusses require extreme care in fabricating, handling, shipping, installing and bracing. Refer to and follow the latest edition of BCSI (Building Component Safety Information, by TPI and TCA) for safety practices prior to performing these functions. Installers shall provide temporary bracing per BCSI. Unless noted otherwise, top chord shall have properly attached structural sheathing and bottom chord shall have a properly attached rigid ceiling. Locations shown for permanent lateral restraint of webs shall have bracing installed per BCSI sections B3, B7 or B10, as applicable.

ITW Building Components Group Inc. (ITWBCG) shall not be responsible for any deviation from this design, any failure to build the truss in conformance with ANSI/TPI 1, or for handling, shipping, installing and bracing of trusses. Apply plates to each face of truss and position as shown above and on the front Details, unless noted otherwise. Refer to drawings 160A-Z for standard plate positions. A seal on this drawing or cover page listing this drawing, indicates acceptance of professional engineering responsibility solely for the design shown. The suitability and use of this design for any structure is the responsibility of the Building Designer per ANSI/TPI 1 Sec.2. For more information see: This truss's general notes page; ITW-BCG: www.itwbcg.com; TPI: www.tpinst.org; WTCA: www.sbcindustry.com; ICC: www.iccsafe.org

WILLIAM H. KRICK LICENSE No. 70861 STATE OF FLORIDA PROFESSIONAL ENGINEER

09/16/2011

(J0672-CRACKER STYLE LOG HOMES HENDERSON RES. - T1CAP)

Top chord 2x4 SP #2 Dense
Bot chord 2x4 SP #2 Dense
Webs 2x4 SP #3

In lieu of rigid ceiling use purlins to brace BC @ 24" OC.

Bottom chord checked for 10.00 psf non-concurrent live load.

Refer to drawing PB1200310 for piggyback detail. Top chord of supporting truss under piggyback to be braced @ 24" O.C., unless otherwise specified.

110 mph wind, 15.00 ft mean hgt, ASCE 7-05, CLOSED bldg, Located anywhere in roof, CAT II, EXP C, wind TC DL=4.2 psf, wind BC DL=5.0 psf. Iw=1.00 GCpi(+/-)=0.18

Wind loads and reactions based on MWFRS with additional C&C member design.

Deflection meets L/360 live and L/240 total load.

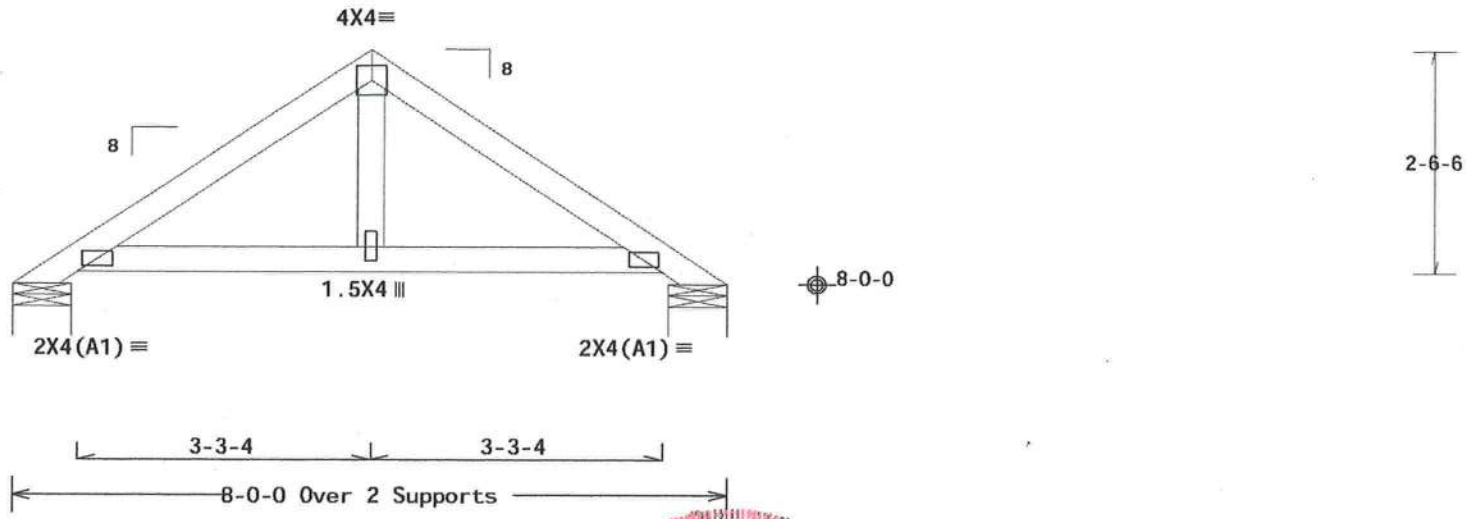

Design Crit: FBC2007Res/TPI-2002(STD)
FT/RT=20%(0%)/10(0) 10.02.06.1210.14 QTY:7 FL/-/2/-/-/R/- Scale =.5"/Ft.

PLT TYP. Wave

ALPINE
ITW Building Components Group Inc.
Haines City, FL 33844
FL COA #0278

WARNING READ AND FOLLOW ALL NOTES ON THIS SHEET!
IMPORTANT FURNISH THIS DESIGN TO ALL CONTRACTORS INCLUDING INSTALLERS.

Trusses require extreme care in fabricating, handling, shipping, installing and bracing. Refer to and follow the latest edition of BCSI (Building Component Safety Information, by TPI and WTCA) for safety practices prior to performing these functions. Installers shall provide temporary bracing per BCSI. Unless noted otherwise, top chord shall have properly attached structural sheathing and bottom chord shall have a properly attached rigid ceiling. Locations shown for permanent lateral restraint of webs shall have bracing installed per BCSI sections B3, B7 or B10, as applicable.

ITW Building Components Group Inc. (ITWBCG) shall not be responsible for any deviation from this design, any failure to build the truss in conformance with ANSI/TPI 1, or for handling, shipping, installation and bracing of trusses. Apply plates to each face of truss and position as shown above and on the Joint Details, unless noted otherwise. Refer to drawings 160A-Z for standard plate positions. A seal on this drawing or cover page listing this drawing, indicates acceptance of professional engineering responsibility solely for the design shown. The suitability and use of this design for any structure is the responsibility of the Building Designer per ANSI/TPI 1 Sec.2. For more information see: This job's general notes page; ITW-BCG: www.itwbcg.com; TPI: www.tpinst.org; WTCA: www.sbcindustry.com; ICC: www.iccsafe.org

WILLIAM H. KRICK LICENSE No. 70671 STATE OF FLORIDA PROFESSIONAL ENGINEER

09/16/2011

TC LL	20.0 PSF	REF	R2327- 11822
TC DL	7.0 PSF	DATE	09/16/11
BC DL	10.0 PSF	DRW	HCUSR2327 11259048
BC LL	0.0 PSF	HC-ENG	SSB/AP
TOT.LD.	37.0 PSF	SEQN-	461304
DUR.FAC.	1.25	FROM	JRG
SPACING	24.0"	JREF-	1UFE2327Z05

(J0672-CRACKER STYLE LOG HOMES HENDERSON RES. - T1CAP2)

Top chord 2x4 SP #2 Dense
Bot chord 2x4 SP #2 Dense
Webs 2x4 SP #3

In lieu of structural panels or rigid ceiling use purlins to brace all flat TC @ 24" OC, all BC @ 24" OC.

Bottom chord checked for 10.00 psf non-concurrent live load.

Refer to drawing PB1200310 for piggyback detail. Top chord of supporting truss under piggyback to be braced @ 24" O.C., unless otherwise specified.

110 mph wind, 15.00 ft mean hgt, ASCE 7-05, CLOSED bldg, Located anywhere in roof, CAT II, EXP C, wind TC DL=4.2 psf, wind BC DL=5.0 psf, Iw=1.00 GCpi(+/-)=0.18

Wind loads and reactions based on MWFRS with additional C&C member design.

Deflection meets L/360 live and L/240 total load.

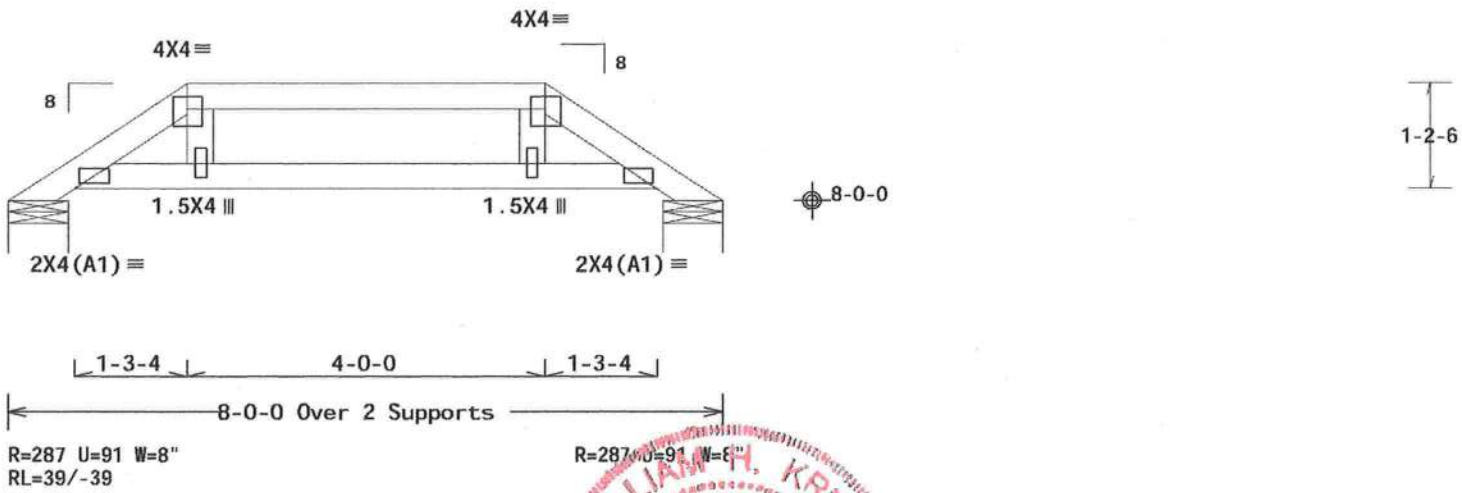

Design Crit: FBC2007Res/TPI-2002(STD)
FT/RT=20%(0%)/10(0) 10.02.06.1210.14

PLT TYP. Wave | QTY:2 | FL/-/2/-/-/R/- | Scale =.5"/Ft.

ALPINE
ITW Building Components Group Inc.
Haines City, FL 33844
FL COA #0278

WARNING READ AND FOLLOW ALL NOTES ON THIS SHEET!
IMPORTANT FURNISH THIS DESIGN TO ALL CONTRACTORS INCLUDING INSTALLERS.

Trusses require extreme care in fabricating, handling, shipping, installing and bracing. Refer to and follow the latest edition of BCSI (Building Component Safety Information, by TPI and WTCA) for safety practices prior to performing these functions. Installers shall provide temporary bracing per BCSI. Unless noted otherwise, top chord shall have properly attached structural sheathing and bottom chord shall have a properly attached rigid ceiling. Locations shown for permanent lateral restraint of webs shall have bracing installed per BCSI sections B3, B7 or B10, as applicable.

ITW Building Components Group Inc. (ITWBCG) shall not be responsible for any deviation from this design, any failure to build the truss in conformance with ANSI/TPI 1, or for handling, shipping, installing and bracing of trusses. Apply plates to each face of truss and position as shown above and on individual Joint Details, unless noted otherwise. Refer to drawings 160A-Z for standard plate positions. A seal on this drawing or cover page listing this drawing, indicates acceptance of professional engineering responsibility solely for the design shown. The suitability and use of this design for any structure is the responsibility of the Building Designer per ANSI/TPI 1 Sec.2. For more information see: This job general notes page; ITW-BCG: www.itwbcg.com; TPI: www.tpinst.org; WTCA: www.sbcindustry.com; ICC: www.iccsafe.org

WILLIAM H. KRICK LICENSE No. 70661 STATE OF FLORIDA PROFESSIONAL ENGINEER

09/16/2011

TC LL	20.0 PSF	REF	R2327- 11823
TC DL	7.0 PSF	DATE	09/16/11
BC DL	10.0 PSF	DRW	HCUSR2327 11259049
BC LL	0.0 PSF	HC-ENG	SSB/AP
TOT.LD.	37.0 PSF	SEQN-	461307
DUR.FAC.	1.25	FROM	JRG
SPACING	24.0"	JREF-	1UFE2327Z05

120 PIGGYBACK DETAIL

UP TO 120 MPH WIND, 30.00 FT MEAN HGT, ASCE 7-02 OR ASCE 7-05, ENCLOSED BLDG. LOCATED ANYWHERE IN ROOF, CAT II, EXP C, WIND DL= 5.0 PSF (MIN), Kzt=1.0.

MAXIMUM TRUSS SPACING IS 24" O.C.
DETAIL IS NOT APPLICABLE IF CAP SUPPORTS ADDITIONAL LOADS SUCH AS CUPOLA, STEEPLE, CHIMNEY OR DRAG STRUT LOADS.

NOTE: TOP CHORDS OF TRUSSES SUPPORTING PIGGYBACK CAP TRUSSES MUST BE ADEQUATELY BRACED BY SHEATHING OR PURLINS. THE BUILDING ENGINEER OF RECORD SHALL PROVIDE DIAGONAL BRACING OR ANY OTHER SUITABLE ANCHORAGE TO PERMANENTLY RESTRAIN PURLINS, AND LATERAL BRACING FOR OUT OF PLANE LOADS OVER GABLE ENDS.

** REFER TO ENGINEER'S SEALED TRUSS DESIGN DRAWING FOR PIGGYBACK AND BASE TRUSS SPECIFICATIONS.

DETAIL A : PURLIN SPACING = 24" O.C. OR LESS

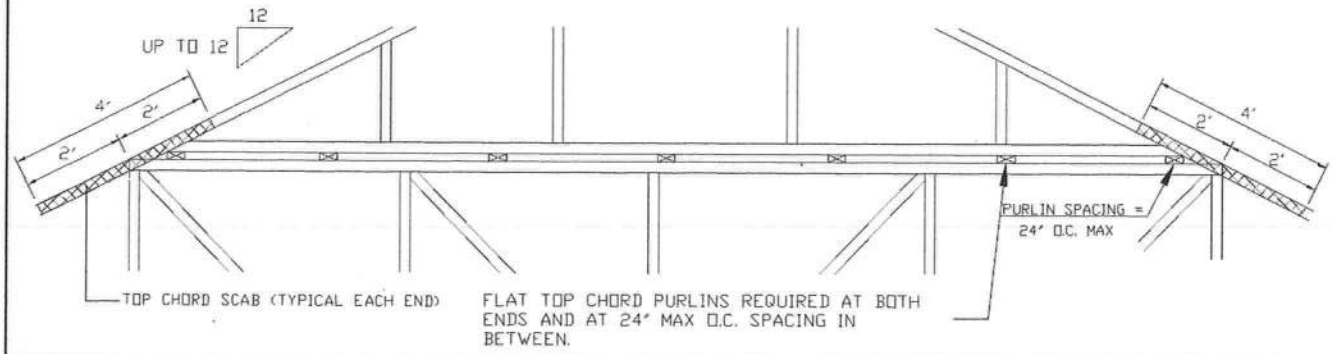

PIGGYBACK CAP TRUSS SLANT NAILED TO ALL TOP CHORD PURLIN BRACING WITH (2) 16d BOX NAILS (0.135"x3.5") AND SECURE TOP CHORD WITH 2x4 #3 GRADE SCAB (1 SIDE ONLY AT EACH END) ATTACHED WITH 2 ROWS OF 10d BOX NAILS (0.128"x3") AT 4" O.C.

ATTACH PURLIN BRACING TO THE FLAT TOP CHORD USING (2) 16d BOX NAILS (0.135"x3.5")

THE TOP CHORD #3 GRADE 2x4 SCAB MAY BE REPLACED WITH EITHER OF THE FOLLOWING: (1) 3x8 TRULOX PLATE ATTACHED WITH (8) 0.120"x1.375" NAILS, (4) INTO CAP TC & (4) INTO BASE TRUSS TC OR (1) 28PB WAVE PIGGYBACK PLATE PLATED TO THE PIGGYBACK TRUSS TC AND ATTACHED TO THE BASE TRUSS TC WITH (4) 0.120"x1.375" NAILS. NOTE: NAILING THRU HOLES OF WAVE PLATE IS ACCEPTABLE.

DETAIL B : PURLIN SPACING > 24" O.C.

PIGGYBACK CAP TRUSS SLANT NAILED TO ALL TOP CHORD PURLIN BRACING WITH (2) 16d BOX NAILS (0.135"x3.5") AND SECURE TOP CHORD WITH 2x4 #3 GRADE SCAB (1 SIDE ONLY AT EACH END) ATTACHED WITH 2 ROWS OF 10d BOX NAILS (0.128"x3") AT 4" O.C.

ATTACH PURLIN BRACING TO THE FLAT TOP CHORD USING A MINIMUM OF (2) 16d BOX NAILS (0.135"x3.5")

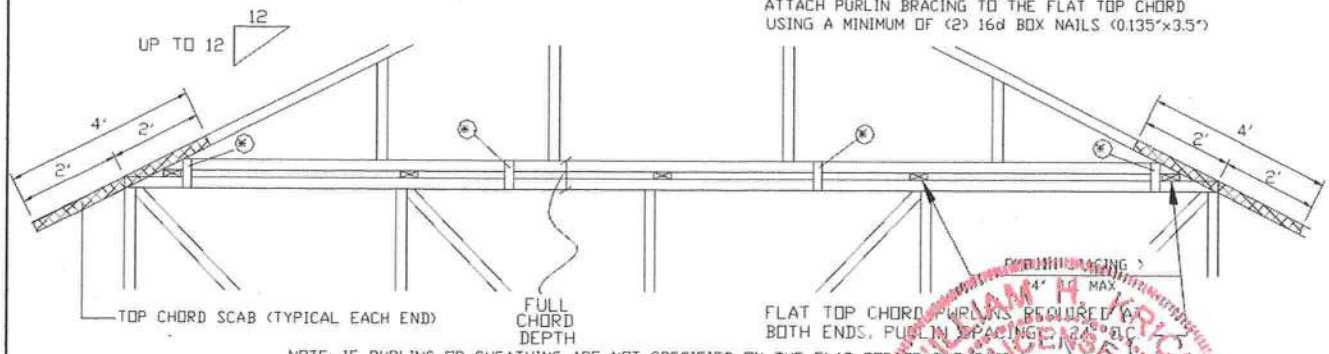

NOTE: IF PURLINS OR SHEATHING ARE NOT SPECIFIED ON THE FLAT TOP OF THE BASE TRUSS, PURLINS MUST BE INSTALLED AT 24" O.C. MAX, AND USE DETAIL A.

* IN ADDITION, PROVIDE CONNECTION WITH ONE OF THE FOLLOWING METHODS:

TRULOX
USE 3x8 TRULOX PLATES FOR 2x4 CHORD MEMBER, AND 3x10 TRULOX PLATES FOR 2x6 AND LARGER CHORD MEMBERS. ATTACH TO EACH FACE @ 8' O.C. WITH (4) 0.120"x1.375" NAILS INTO CAP BOTTOM CHORD AND (4) IN BASE TRUSS TOP CHORD. TRULOX PLATES MAY BE STAGGERED 4' O.C. FRONT TO BACK FACES.

APA RATED GUSSET
8"x8"x7/16" (MIN) APA RATED SHEATHING GUSSETS (EACH FACE). ATTACH @ 8' O.C. WITH (8) 6d COMMON (0.113"x2") NAILS PER GUSSET, (4) IN CAP BOTTOM CHORD AND (4) IN BASE TRUSS TOP CHORD. GUSSETS MAY BE STAGGERED 4' O.C. FRONT TO BACK FACES.

2x4 VERTICAL SCABS
2x4 SPF#2, FULL CHORD DEPTH SCABS (EACH FACE). ATTACH @ 8' O.C. WITH (6) 10d BOX NAILS (0.128"x3") PER SCAB, (3) IN CAP BOTTOM CHORD AND (3) IN BASE TRUSS TOP CHORD. SCABS MAY BE STAGGERED 4' O.C. FRONT TO BACK FACE

28PB WAVE PIGGYBACK PLATE
ONE 28PB WAVE PIGGYBACK PLATE TO EACH FACE @ 8' O.C. ATTACH TEETH TO PIGGYBACK AT TIME OF FABRICATION. ATTACH TO SUPPORTING TRUSS WITH (4) 0.120"x1.375" NAILS PER FACE PER PLY. PIGGYBACK PLATES MAY BE STAGGERED 4' O.C. FRONT TO BACK FACES.

ITW Building Components Group Inc.
Earth City, MO 63045

WARNING READ AND FOLLOW ALL NOTES ON THIS SHEET!
Trusses require extreme care in fabricating, handling, shipping, installing and bracing. Refer to and follow BCSI (Building Component Safety Information, by TPI and WTCA) for safety practices prior to performing these functions. Installers shall provide temporary bracing per BCSI. Unless noted otherwise, top chord shall have properly attached structural panels and bottom chord shall have a properly attached rigid ceiling. Locations shown for permanent lateral restraint of webs shall have bracing installed per BCSI sections B3 & B7. See this job's general notes page for more information.

IMPORTANT FURNISH COPY OF THIS DESIGN TO INSTALLATION CONTRACTOR.
ITW Building Components Group Inc. (ITWBCG) shall not be responsible for any deviation from this design, any failure to build the truss in conformance with TPI, or fabricating, handling, shipping, installing & bracing of trusses. ITWBCG connector plates are made of 20/18/16GA (V,H/S,S) ASTM A653 grade 37/40/60 (K/W/H,S) galv. steel. Apply plates to each face of truss, positioned as shown above and on Joint Details.
A seal on this drawing or cover page indicates acceptance and professional engineering responsibility solely for the truss component design shown. The suitability and use of this component for any building is the responsibility of the Building Designer per ANST/TPI 1 Sec. 2.
ITW-BCG: www.itwbcg.com; TPI: www.tpinst.com; WTCA: www.sbcindustry.com; ICC: www.iccsafe.org

WILLIAM H. VERICK LICENSE No. 70861 STATE OF FLORIDA PROFESSIONAL ENGINEER

Sep 16 '11
09/16/2011

SPACING 24.0"

REF	PIGGYBACK
DATE	03/15/10
DRWG	PB1200310

Residential System Sizing Calculation

Summary

Michael & Janet Henderson
1061 SW English Street
Lake City, FL 32025-

Project Title:
Henderson Res

Code Only
Professional Version
Climate: North

9/9/2011

Location for weather data: Gainesville - Defaults: Latitude(29) Altitude(152 ft.) Temp Range(M)
Humidity data: Interior RH (50%) Outdoor wet bulb (77F) Humidity difference(54gr.)

Winter design temperature	33	F	Summer design temperature	92	F
Winter setpoint	70	F	Summer setpoint	75	F
Winter temperature difference	37	F	Summer temperature difference	17	F
Total heating load calculation	**19355**	**Btuh**	**Total cooling load calculation**	**21908**	**Btuh**
Submitted heating capacity	% of calc	Btuh	Submitted cooling capacity	% of calc	Btuh
Total (Electric Heat Pump)	123.5	23900	Sensible (SHR = 0.75)	122.5	17925
Heat Pump + Auxiliary(0.0kW)	123.5	23900	Latent	82.2	5975
			Total (Electric Heat Pump)	109.1	23900

WINTER CALCULATIONS

Winter Heating Load (for 1780 sqft)

Load component			Load	
Window total	189	sqft	3986	Btuh
Wall total	1179	sqft	2596	Btuh
Door total	40	sqft	518	Btuh
Ceiling total	1958	sqft	2307	Btuh
Floor total	1780	sqft	2257	Btuh
Infiltration	190	cfm	7691	Btuh
Duct loss			0	Btuh
Subtotal			**19355**	**Btuh**
Ventilation	0	cfm	0	Btuh
TOTAL HEAT LOSS			**19355**	**Btuh**

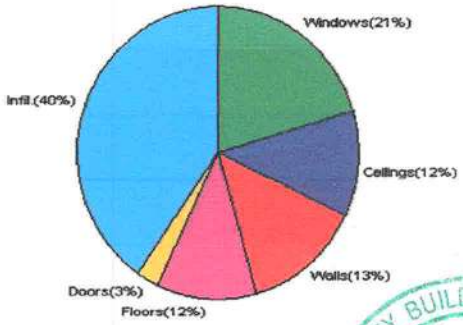

COLUMBIA COUNTY BUILDING DEPARTMENT
Received for
FILE COPY
Code Compliance
PLANS EXAMINER

SUMMER CALCULATIONS

Summer Cooling Load (for 1780 sqft)

Load component			Load	
Window total	189	sqft	4070	Btuh
Wall total	1179	sqft	1074	Btuh
Door total	40	sqft	392	Btuh
Ceiling total	1958	sqft	1995	Btuh
Floor total			234	Btuh
Infiltration	166	cfm	3092	Btuh
Internal gain			3780	Btuh
Duct gain			0	Btuh
Sens. Ventilation	0	cfm	0	Btuh
Total sensible gain			**14637**	**Btuh**
Latent gain(ducts)			0	Btuh
Latent gain(infiltration)			6071	Btuh
Latent gain(ventilation)			0	Btuh
Latent gain(internal/occupants/other)			1200	Btuh
Total latent gain			**7271**	**Btuh**
TOTAL HEAT GAIN			**21908**	**Btuh**

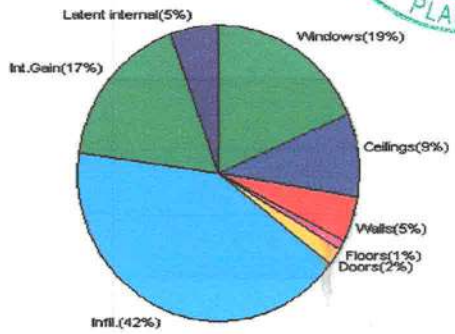

Version 8
For Florida residences only

EnergyGauge® System Sizing
PREPARED BY: _____
DATE: 9/7/11

ENERGY PERFORMANCE LEVEL (EPL) DISPLAY CARD

ESTIMATED ENERGY PERFORMANCE INDEX* = 85

The lower the EnergyPerformance Index, the more efficient the home.

1061 SW English Street, Lake City, FL, 32025-

1. New construction or existing	New (From Plans)
2. Single family or multiple family	Single-family
3. Number of units, if multiple family	1
4. Number of Bedrooms	3
5. Is this a worst case?	No
6. Conditioned floor area (ft²)	1780

7. Windows**	Description	Area
a. U-Factor:	Dbl, U=0.30	189.00 ft²
SHGC:	SHGC=0.50	
b. U-Factor:	N/A	ft²
SHGC:		
c. U-Factor:	N/A	ft²
SHGC:		
d. U-Factor:	N/A	ft²
SHGC:		
e. U-Factor:	N/A	ft²
SHGC:		

8. Floor Types	Insulation	Area
a. Crawlspace	R=19.0	1780.00 ft²
b. N/A	R=	ft²
c. N/A	R=	ft²

9. Wall Types	Insulation	Area
a. Log - 6 inch, Exterior	R=8.4	1408.00 ft²
b. N/A	R=	ft²
c. N/A	R=	ft²
d. N/A	R=	ft²

10. Ceiling Types	Insulation	Area
a. Under Attic (Vented)	R=30.0	1958.00 ft²
b. N/A	R=	ft²
c. N/A	R=	ft²

11. Ducts
a. Sup: Interior Ret: Interior AH: Interior Sup. R= 6, 445 ft²

12. Cooling systems
a. Central Unit — Cap: 23.9 kBtu/hr, SEER: 14

13. Heating systems
a. Electric Heat Pump — Cap: 23.9 kBtu/hr, HSPF: 7.7

14. Hot water systems
a. Electric — Cap: 50 gallons, EF: 0.92

b. Conservationfeatures
None

15. Credits — None

I certify that this home has complied with the Florida Energy Efficiency Code for Building Construction through the above energy saving features which will be installed (or exceeded) in this home before final inspection. Otherwise, a new EPL Display Card will be completed based on installed Code compliant features.

Builder Signature: _____ Date: _____

Address of New Home: _____ City/FL Zip: _____

*Note: The home's estimated Energy Performance Index is only available through the EnergyGauge USA - FlaRes2008 computer program. This is not a Building Energy Rating. If your Index is below 100, your home may qualify for incentives if you obtain a Florida Energy Gauge Rating. Contact the Energy Gauge Hotline at (321) 638-1492 or see the Energy Gauge web site at energygauge.com for information and a list of certified Raters. For information about Florida's Energy Efficiency Code for Building Construction, contact the

**Label required by Section 13-104.4.5 of the Florida Building Code, Building, or Section B2.1.1 of Appendix G of the Florida Building Code, Residential, if not DEFAULT.

ENERGY PERFORMANCE LEVEL (EPL) DISPLAY CARD

ESTIMATED ENERGY PERFORMANCE INDEX* = 85

The lower the EnergyPerformance Index, the more efficient the home.

1061 SW English Street, Lake City, FL, 32025-

1. New construction or existing		New (From Plans)
2. Single family or multiple family		Single-family
3. Number of units, if multiple family		1
4. Number of Bedrooms		3
5. Is this a worst case?		No
6. Conditioned floor area (ft²)		1780
7. Windows**	Description	Area
a. U-Factor:	Dbl, U=0.30	189.00 ft²
SHGC:	SHGC=0.50	
b. U-Factor:	N/A	ft²
SHGC:		
c. U-Factor:	N/A	ft²
SHGC:		
d. U-Factor:	N/A	ft²
SHGC:		
e. U-Factor:	N/A	ft²
SHGC:		

8. Floor Types	Insulation	Area
a. Crawlspace	R=19.0	1780.00 ft²
b. N/A	R=	ft²
c. N/A	R=	ft²

9. Wall Types	Insulation	Area
a. Log - 6 inch, Exterior	R=8.4	1408.00 ft²
b. N/A	R=	ft²
c. N/A	R=	ft²
d. N/A	R=	ft²

10. Ceiling Types	Insulation	Area
a. Under Attic (Vented)	R=30.0	1958.00 ft²
b. N/A	R=	ft²
c. N/A	R=	ft²

11. Ducts
a. Sup: Interior Ret: Interior AH: Interior Sup. R= 6, 445 ft²

12. Cooling systems	
a. Central Unit	Cap: 23.9 kBtu/hr SEER: 14
13. Heating systems	
a. Electric Heat Pump	Cap: 23.9 kBtu/hr HSPF: 7.7
14. Hot water systems	
a. Electric	Cap: 50 gallons EF: 0.92
b. Conservationfeatures None	
15. Credits	None

I certify that this home has complied with the Florida Energy Efficiency Code for Building Construction through the above energy saving features which will be installed (or exceeded) in this home before final inspection. Otherwise, a new EPL Display Card will be completed based on installed Code compliant features.

Builder Signature: _____ Date: _____

Address of New Home: _____ City/FL Zip: _____

Department of Community Affairs at (850) 487-1824.

**Label required by Section 13-104.4.5 of the Florida Building Code, Building, or Section B2.1.1 of Appendix G of the Florida Building Code, Residential, if not DEFAULT.

EnergyGauge®USA - FlaRes2008

Manual J Winter Calculations

Residential Load - Component Details (continued)

Michael & Janet Henderson
1061 SW English Street
Lake City, FL 32025-

Project Title:
Henderson Res

Code Only
Professional Version
Climate: North

9/9/2011

EQUIPMENT		
1. Electric Heat Pump	#	23900 Btuh

Key: Window types (SHGC - Shading coefficient of glass as SHGC numerical value or as clear or tint)
(Frame types - metal, wood or insulated metal)
(U - Window U-Factor or 'DEF' for default)
(HTM - ManualJ Heat Transfer Multiplier)
Key: Floor size (perimeter(p) for slab-on-grade or area for all other floor types)

Version 8
For Florida residences only

System Sizing Calculations - Winter

Residential Load - Whole House Component Details

Michael & Janet Henderson
1061 SW English Street
Lake City, FL 32025-

Project Title:
Henderson Res

Code Only
Professional Version
Climate: North

Reference City: Gainesville (Defaults) Winter Temperature Difference: 37.0 F

9/9/2011

Component Loads for Whole House

Window	Panes/SHGC/Frame/U	Orientation	Area(sqft) X	HTM=	Load
1	2, Clear, Wood, 0.57	E	90.0	21.1	1898 Btuh
2	2, Clear, Wood, 0.57	N	30.0	21.1	633 Btuh
3	2, Clear, Wood, 0.57	W	15.0	21.1	316 Btuh
4	2, Clear, Wood, 0.57	W	24.0	21.1	506 Btuh
5	2, Clear, Wood, 0.57	S	30.0	21.1	633 Btuh
	Window Total		189(sqft)		3986 Btuh
Walls	Type	R-Value	Area X	HTM=	Load
1	Log - 6inch - Ext(0.06)	8.4	1179	2.2	2596 Btuh
	Wall Total		1179		2596 Btuh
Doors	Type		Area X	HTM=	Load
1	Insulated - Exterior		40	12.9	518 Btuh
	Door Total		40		518Btuh
Ceilings	Type/Color/Surface	R-Value	Area X	HTM=	Load
1	Vented Attic/L/Meta	30.0	1958	1.2	2307 Btuh
	Ceiling Total		1958		2307Btuh
Floors	Type	R-Value	Size X	HTM=	Load
1	Raised Wood - Stem Wall	19	1780.0 sqft	1.3	2257 Btuh
	Floor Total		1780		2257 Btuh
			Envelope Subtotal:		11664 Btuh
Infiltration	Type	ACH X	Volume(cuft)	walls(sqft) CFM=	
	Natural	0.80	14240	1179 189.9	7691 Btuh
Ductload				(DLM of 0.000)	0 Btuh
All Zones			**Sensible Subtotal All Zones**		**19355 Btuh**

WHOLE HOUSE TOTALS

	Subtotal Sensible	19355 Btuh
	Ventilation Sensible	0 Btuh
	Total Btuh Loss	19355 Btuh

Manual J Winter Calculations

Residential Load - Component Details (continued)

Michael & Janet Henderson
1061 SW English Street
Lake City, FL 32025-

Project Title:
Henderson Res

Code Only
Professional Version
Climate: North

9/9/2011

EQUIPMENT		
1. Electric Heat Pump	#	23900 Btuh

Key: Window types (SHGC - Shading coefficient of glass as SHGC numerical value or as clear or tint)
(Frame types - metal, wood or insulated metal)
(U - Window U-Factor or 'DEF' for default)
(HTM - ManualJ Heat Transfer Multiplier)
Key: Floor size (perimeter(p) for slab-on-grade or area for all other floor types)

Version 8
For Florida residences only

System Sizing Calculations - Winter

Residential Load - Room by Room Component Details

Michael & Janet Henderson
1061 SW English Street
Lake City, FL 32025-

Project Title:
Henderson Res

Code Only
Professional Version
Climate: North

Reference City: Gainesville (Defaults) Winter Temperature Difference: 37.0 F

9/9/2011

Component Loads for Zone #1: Main

Window	Panes/SHGC/Frame/U	Orientation	Area(sqft) X	HTM=	Load
1	2, Clear, Wood, 0.57	E	90.0	21.1	1898 Btuh
2	2, Clear, Wood, 0.57	N	30.0	21.1	633 Btuh
3	2, Clear, Wood, 0.57	W	15.0	21.1	316 Btuh
4	2, Clear, Wood, 0.57	W	24.0	21.1	506 Btuh
5	2, Clear, Wood, 0.57	S	30.0	21.1	633 Btuh
	Window Total		189(sqft)		3986 Btuh
Walls	Type	R-Value	Area X	HTM=	Load
1	Log - 6inch - Ext(0.06)	8.4	1179	2.2	2596 Btuh
	Wall Total		1179		2596 Btuh
Doors	Type		Area X	HTM=	Load
1	Insulated - Exterior		40	12.9	518 Btuh
	Door Total		40		518Btuh
Ceilings	Type/Color/Surface	R-Value	Area X	HTM=	Load
1	Vented Attic/L/Meta	30.0	1958	1.2	2307 Btuh
	Ceiling Total		1958		2307Btuh
Floors	Type	R-Value	Size X	HTM=	Load
1	Raised Wood - Stem Wall	19	1780.0 sqft	1.3	2257 Btuh
	Floor Total		1780		2257 Btuh
			Zone Envelope Subtotal:		11664 Btuh
Infiltration	Type	ACH X	Volume(cuft)	walls(sqft)	CFM=
	Natural	0.80	14240	1179	189.9	7691 Btuh
Ductload	Pro. leak free, Supply(R6.0-Cond.), Return(R6.0-Cond) (DLM of 0.000)				0 Btuh
Zone #1			**Sensible Zone Subtotal**		**19355 Btuh**

WHOLE HOUSE TOTALS

	Subtotal Sensible	19355 Btuh
	Ventilation Sensible	0 Btuh
	Total Btuh Loss	19355 Btuh

Manual J Summer Calculations

Residential Load - Component Details (continued)

Michael & Janet Henderson
1061 SW English Street
Lake City, FL 32025-

Project Title:
Henderson Res

Code Only
Professional Version
Climate: North

9/9/2011

WHOLE HOUSE TOTALS

Whole House Totals for Cooling	**Sensible Envelope Load All Zones**	**14637 Btuh**
	Sensible Duct Load	0 Btuh
	Total Sensible Zone Loads	**14637 Btuh**
	Sensible ventilation	0 Btuh
	Blower	0 Btuh
	Total sensible gain	**14637 Btuh**
	Latent infiltration gain (for 54 gr. humidity difference)	6071 Btuh
	Latent ventilation gain	0 Btuh
	Latent duct gain	0 Btuh
	Latent occupant gain (6 people @ 200 Btuh per person)	1200 Btuh
	Latent other gain	0 Btuh
	Latent total gain	**7271 Btuh**
	TOTAL GAIN	**21908 Btuh**

EQUIPMENT

1. Central Unit	#	23900 Btuh

*Key: Window types (Pn - Number of panes of glass)
(SHGC - Shading coefficient of glass as SHGC numerical value or as clear or tint)
(U - Window U-Factor or 'DEF' for default)
(InSh - Interior shading device: none(N), Blinds(B), Draperies(D) or Roller Shades(R))
(ExSh - Exterior shading device: none(N) or numerical value)
(BS - Insect screen: none(N), Full(F) or Half(H))
(Ornt - compass orientation)

Version 8
For Florida residences only

System Sizing Calculations - Summer

Residential Load - Whole House Component Details

Michael & Janet Henderson
1061 SW English Street
Lake City, FL 32025-

Project Title:
Henderson Res

Code Only
Professional Version
Climate: North

Reference City: Gainesville (Defaults) Summer Temperature Difference: 17.0 F 9/9/2011

Component Loads for Whole House

Window	Type* Pn/SHGC/U/InSh/ExSh/IS	Ornt	Overhang Len	Overhang Hgt	Window Area(sqft) Gross	Shaded	Unshaded	HTM Shaded	HTM Unshaded	Load
1	2, Clear, 0.57, None,0.00,N	E	9.5ft.	1ft.	90.0	90.0	0.0	22	22	1938 Btuh
2	2, Clear, 0.57, None,0.00,N	N	9.5ft.	1ft.	30.0	0.0	30.0	22	22	646 Btuh
3	2, Clear, 0.57, None,0.00,N	W	9.5ft.	1ft.	15.0	15.0	0.0	22	22	323 Btuh
4	2, Clear, 0.57, None,0.00,N	W	9.5ft.	1ft.	24.0	24.0	0.0	22	22	517 Btuh
5	2, Clear, 0.57, None,0.00,N	S	9.5ft.	1ft.	30.0	30.0	0.0	22	22	646 Btuh
	Window Total				189 (sqft)					4070 Btuh

Walls	Type	R-Value/U-Value	Area(sqft)	HTM	Load
1	Log - 6inch - Ext	8.4/0.06	1179.0	0.9	1074 Btuh
	Wall Total		1179 (sqft)		1074 Btuh
Doors	Type		Area (sqft)	HTM	Load
1	Insulated - Exterior		40.0	9.8	392 Btuh
	Door Total		40 (sqft)		392 Btuh
Ceilings	Type/Color/Surface	R-Value	Area(sqft)	HTM	Load
1	Vented Attic/Light/Metal/RB	30.0	1958.0	1.0	1995 Btuh
	Ceiling Total		1958 (sqft)		1995 Btuh
Floors	Type	R-Value	Size	HTM	Load
1	Raised Wood - Stem Wall	19.0	1780 (sqft)	0.1	234 Btuh
	Floor Total		1780.0 (sqft)		234 Btuh
			Envelope Subtotal:		7765 Btuh

Infiltration	Type	ACH	Volume(cuft)	wall area(sqft)	CFM=	Load
	SensibleNatural	0.70	14240	1179	189.9	3092 Btuh
Internal gain		Occupants	Btuh/occupant		Appliance	Load
		6	X 230	+	2400	3780 Btuh
			Sensible Envelope Load:			14637 Btuh
Duct load			(DGM of 0.000)			0 Btuh
			Sensible Load All Zones			**14637 Btuh**

Manual J Summer Calculations

Residential Load - Component Details (continued)

Michael & Janet Henderson
1061 SW English Street
Lake City, FL 32025-

Project Title:
Henderson Res

Code Only
Professional Version
Climate: North

9/9/2011

WHOLE HOUSE TOTALS

Whole House Totals for Cooling	**Sensible Envelope Load All Zones**	**14637 Btuh**
	Sensible Duct Load	0 Btuh
	Total Sensible Zone Loads	**14637 Btuh**
	Sensible ventilation	0 Btuh
	Blower	0 Btuh
	Total sensible gain	**14637 Btuh**
	Latent infiltration gain (for 54 gr. humidity difference)	6071 Btuh
	Latent ventilation gain	0 Btuh
	Latent duct gain	0 Btuh
	Latent occupant gain (6 people @ 200 Btuh per person)	1200 Btuh
	Latent other gain	0 Btuh
	Latent total gain	**7271 Btuh**
	TOTAL GAIN	**21908 Btuh**

EQUIPMENT

1. Central Unit	#	23900 Btuh

*Key: Window types (Pn - Number of panes of glass)
(SHGC - Shading coefficient of glass as SHGC numerical value or as clear or tint)
(U - Window U-Factor or 'DEF' for default)
(InSh - Interior shading device: none(N), Blinds(B), Draperies(D) or Roller Shades(R))
(ExSh - Exterior shading device: none(N) or numerical value)
(BS - Insect screen: none(N), Full(F) or Half(H))
(Ornt - compass orientation)

Version 8
For Florida residences only

System Sizing Calculations - Summer

Residential Load - Room by Room Component Details

Michael & Janet Henderson
1061 SW English Street
Lake City, FL 32025-

Project Title:
Henderson Res

Code Only
Professional Version
Climate: North

Reference City: Gainesville (Defaults) Summer Temperature Difference: 17.0 F 9/9/2011

Component Loads for Zone #1: Main

Window	Type* Pn/SHGC/U/InSh/ExSh/IS	Ornt	Overhang Len	Overhang Hgt	Window Area(sqft) Gross	Shaded	Unshaded	HTM Shaded	HTM Unshaded	Load
1	2, Clear, 0.57, None,0.00,N	E	9.5ft.	1ft.	90.0	90.0	0.0	22	22	1938 Btuh
2	2, Clear, 0.57, None,0.00,N	N	9.5ft.	1ft.	30.0	0.0	30.0	22	22	646 Btuh
3	2, Clear, 0.57, None,0.00,N	W	9.5ft.	1ft.	15.0	15.0	0.0	22	22	323 Btuh
4	2, Clear, 0.57, None,0.00,N	W	9.5ft.	1ft.	24.0	24.0	0.0	22	22	517 Btuh
5	2, Clear, 0.57, None,0.00,N	S	9.5ft.	1ft.	30.0	30.0	0.0	22	22	646 Btuh
	Window Total				189 (sqft)					4070 Btuh

Walls	Type	R-Value/U-Value	Area(sqft)	HTM	Load
1	Log - 6inch - Ext	8.4/0.06	1179.0	0.9	1074 Btuh
	Wall Total		1179 (sqft)		1074 Btuh
Doors	Type		Area (sqft)	HTM	Load
1	Insulated - Exterior		40.0	9.8	392 Btuh
	Door Total		40 (sqft)		392 Btuh
Ceilings	Type/Color/Surface	R-Value	Area(sqft)	HTM	Load
1	Vented Attic/Light/Metal/RB	30.0	1958.0	1.0	1995 Btuh
	Ceiling Total		1958 (sqft)		1995 Btuh
Floors	Type	R-Value	Size	HTM	Load
1	Raised Wood - Stem Wall	19.0	1780 (sqft)	0.1	234 Btuh
	Floor Total		1780.0 (sqft)		234 Btuh
				Zone Envelope Subtotal:	7765 Btuh

Infiltration	Type	ACH	Volume(cuft)	wall area(sqft)	CFM=	Load
	SensibleNatural	0.70	14240	1179	166.1	3092 Btuh
Internal gain		Occupants	Btuh/occupant		Appliance	Load
		6	X 230	+	2400	3780 Btuh
					Sensible Envelope Load:	14637 Btuh
Duct load	Prop. leak free, Supply(R6.0-Cond.), Return(R6.0-Cond)				(DGM of 0.000)	0 Btuh
					Sensible Zone Load	**14637 Btuh**

Residential Window Diversity

MidSummer

Michael & Janet Henderson
1061 SW English Street
Lake City, FL 32025-

Project Title:
Henderson Res

Code Only
Professional Version
Climate: North

9/9/2011

Weather data for: Gainesville - Defaults

Summer design temperature	92 F	Average window load for July	4724 Btuh
Summer setpoint	75 F	Peak window load for July	5656 Btuh
Summer temperature difference	17 F	Excusion limit(130% of Ave.)	6141 Btuh
Latitude	29 North	Window excursion (July)	None

WINDOW Average and Peak Loads

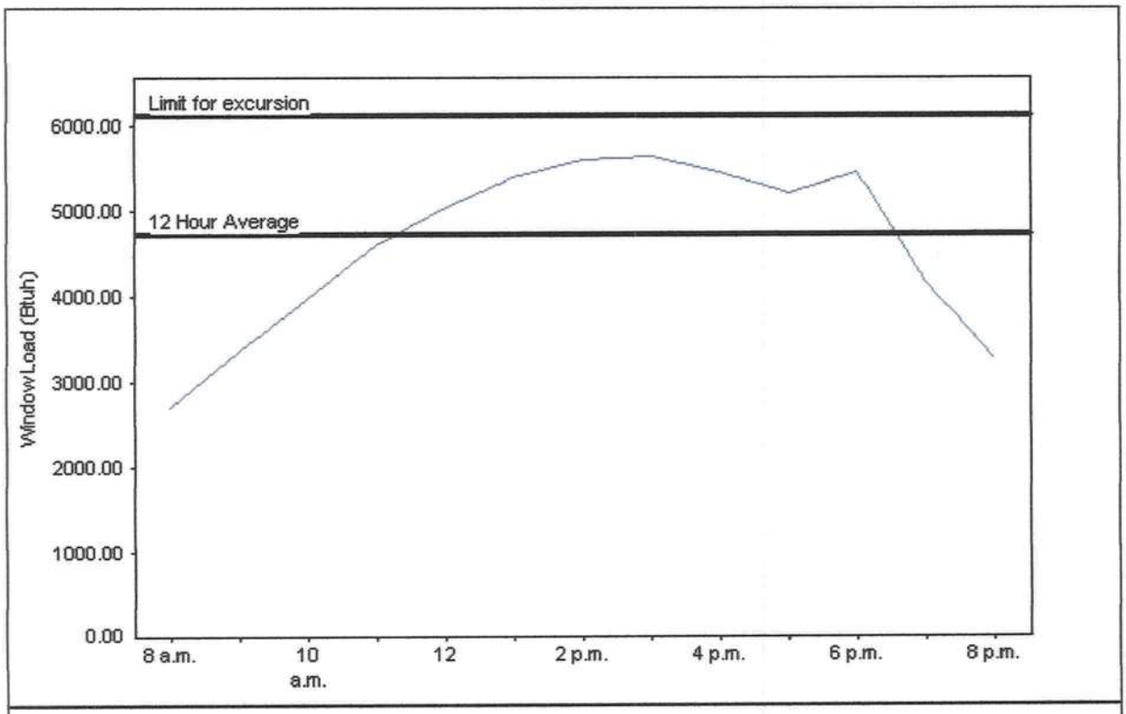

Total July Window Load(Radiation and conduction)

The midsummer window load for this house does not exceed the window load excursion limit.
This house has adequate midsummer window diversity.

EnergyGauge® System Sizing for Florida residences only
PREPARED BY: _____
DATE: _____

EnergyGauge® FLRCPB v4.5.2

Bearing Information

JOB #: J0672
Date: 09/09/2011
Delivery Date:

DULEY TRUSS
P.O. Box 340
Dunnellon, FL 34430
(352) 465-0964

JOB LOCATION:
HENDERSON RES.

Builder: CRACKER STYLE LOG HOMES
Salesman: SAMPLE SALESMAN

Qty: (11) Span: 35'9" Desc.: T1

Brg.#1Info:	Type=BCBRG	Size=	0.38	Reaction=	1392.60	Uplift=	128.00
Brg.#2Info:	Type=	Size=	0.38	Reaction=	1392.60	Uplift=	128.00

Qty: (2) Span: 35'9" Desc.: T2

Brg.#1Info:	Type=BCBRG	Size=	0.38	Reaction=	1586.10	Uplift=	424.00
Brg.#2Info:	Type=	Size=	0.38	Reaction=	1587.09	Uplift=	424.00

Qty: (2) Span: 35'9" Desc.: T3

Brg.#1Info:	Type=BCBRG	Size=	0.38	Reaction=	1642.63	Uplift=	424.00
Brg.#2Info:	Type=	Size=	0.38	Reaction=	1643.89	Uplift=	424.00

Qty: (2) Span: 35'9" Desc.: T4

Brg.#1Info:	Type=BCBRG	Size=	0.38	Reaction=	1542.69	Uplift=	424.00
Brg.#2Info:	Type=	Size=	0.38	Reaction=	1553.84	Uplift=	424.00

Qty: (2) Span: 35'9" Desc.: T5

Brg.#1Info:	Type=BCBRG	Size=	0.38	Reaction=	1525.80	Uplift=	424.00
Brg.#2Info:	Type=	Size=	0.38	Reaction=	1540.72	Uplift=	424.00

Qty: (2) Span: 35'9" Desc.: T6

Brg.#1Info:	Type=BCBRG	Size=	0.38	Reaction=	1373.26	Uplift=	424.00
Brg.#2Info:	Type=	Size=	0.38	Reaction=	1373.26	Uplift=	424.00

Qty: (2) Span: 35'9" Desc.: T7

Brg.#1Info:	Type=BCBRG	Size=	0.38	Reaction=	1373.26	Uplift=	424.00
Brg.#2Info:	Type=	Size=	0.38	Reaction=	1373.26	Uplift=	424.00

Qty: (7) Span: 8' Desc.: T1CAP

Brg.#1Info:	Type=TCBRG	Size=	0.67	Reaction=	287.11	Uplift=	88.00
Brg.#2Info:	Type=	Size=	0.67	Reaction=	287.11	Uplift=	88.00

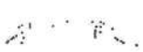

Qty: (2) Span: 8' Desc.: T1CAP2

Brg.#1Info:	Type=TCBRG	Size=	0.67	Reaction=	287.11	Uplift=	92.00
Brg.#2Info:	Type=	Size=	0.67	Reaction=	287.11	Uplift=	92.00

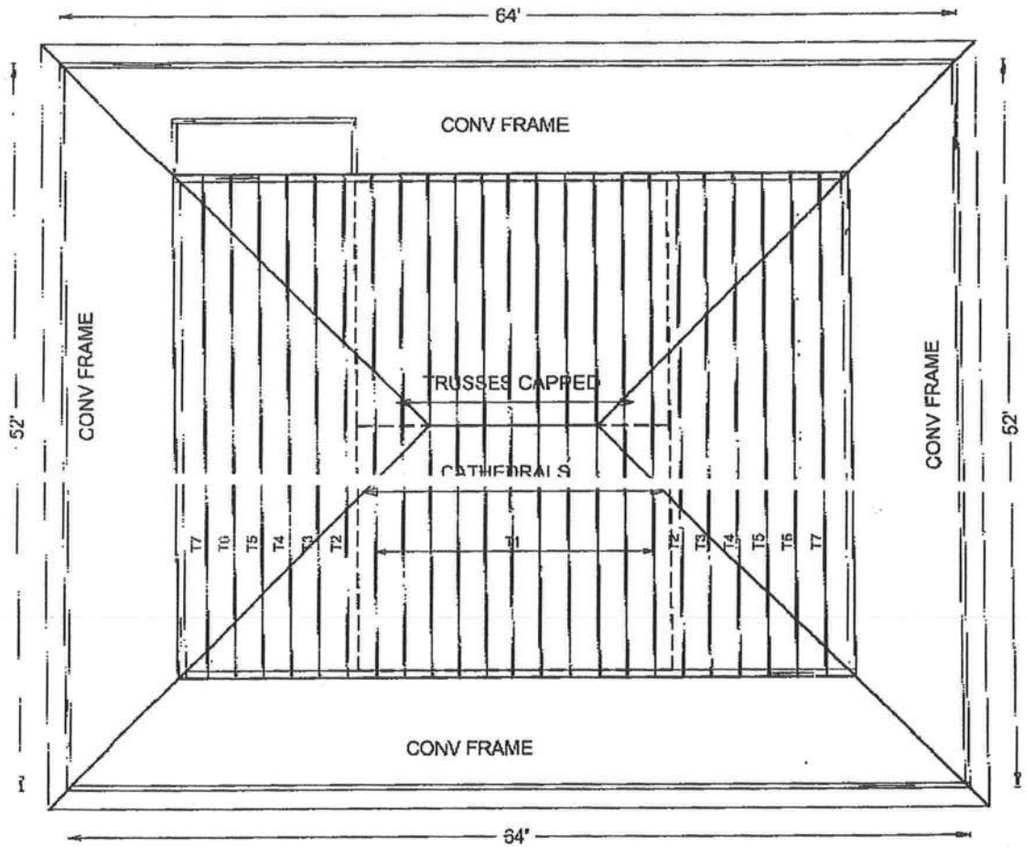

DULEY TRUSS INC.
CRACKER STYLE LOG HOMES
HENDERSON RES
8/12 SLOPE
9/1/11 JRG
J0672

WAVE TRUSS PLATE
ALPINE ENGINEERED PRODUCTS
APPROVAL # FL1999.3

REV. 9/9/11 JRG
ADDED CATHEDRALS
IN MIDDLE OF HOUSE

JOB LOCATION:

JOB DESCRIPTION:
CRACKER STYLE LOG HOMES HENDE

DESIGNED BY:
RICKY GRUBBS

JOB NO:
J0672

PAGE NO:
1 OF 1

>29696<

August 26, 2014

Columbia County Building + Zoning,

Our original permit expired on May 1, 2012, and we are requesting another permit. We are at the rough-in, mechinal and plumbing stage. We need to rein-state our permit so we can complete our home.

Thank you,

Mike and Janet Henderson

11-370 (Septic)

Expired - 3-12-2013

$ 835.00 % 25 = $ 208.75

Permit Details

Permit Information

Permit #: 000029696 **Septic #:** 11-370
Issued: Monday, September 26, 2011
Permit Type: SFD, UTILITY
Subdivision: AKA
Parcel #: 16-5S-17-09270-001
Owner: MICHAEL & JANET HENDERSON
Address: 1061 SW ENGLISH STREET LAKE CITY FL 32025
Zoning: AG-3
Flood Zone: X

Contractor Information

Contractor: OWNER BUILDER
Address: 0 FL
License:

Notes:
NOC ON FILE,
FLOOR ONE FOOT ABOVE THE ROAD
OWNER BUILDER DISCLOSURE ON FILE
Inspection Notes:
FRAMING & BLOCKING 10/28/2011 TC-RJ, FLOOR FRAMING 10/27/11 TC-RJ

Inspection Log Documents

Inspection Date	Notes	Inspected By
9/26/2011	Foundation Inspection	RJ
9/29/2011	Perimeter Beam/Column Inspection	TC
12/1/2011	Sheeting and Nailing Inspection	TC

Close Window

DATE 09/26/2011

Columbia County Building Permit

This Permit Must Be Prominently Posted on Premises During Construction

PERMIT
000029696

APPLICANT MICHAEL HENDERSON PHONE 904-716-7276

ADDRESS 5378 PAINTED PONY AVE MELROSE FL 32666

OWNER MICHAEL & JANET HENDERSON PHONE 904-509-1450

ADDRESS 1061 SW ENGLISH STREET LAKE CITY FL 32025

CONTRACTOR OWNER BUILDER PHONE

LOCATION OF PROPERTY 441 S, R ENGLISH ST, GO .9 MILES ON RIGHT TO 1061

TYPE DEVELOPMENT SFD, UTILITY ESTIMATED COST OF CONSTRUCTION 166400.00

HEATED FLOOR AREA 1780.00 TOTAL AREA 3328.00 HEIGHT 20.00 STORIES 1

FOUNDATION CONCRETE WALLS FRAMED ROOF PITCH 7/12 FLOOR SLAB

LAND USE & ZONING AG-3 MAX. HEIGHT 35

Minimum Set Back Requirments: STREET-FRONT 30.00 REAR 25.00 SIDE 25.00

NO. EX.D.U. 0 FLOOD ZONE X DEVELOPMENT PERMIT NO.

PARCEL ID 16-5S-17-09270-001 SUBDIVISION AKA

LOT 3/4 BLOCK PHASE UNIT TOTAL ACRES 25.00

Culvert Permit No.	Culvert Waiver	Contractor's License Number	Applicant/Owner/Contractor	
EXISTING WAIVER	11-370	BK	TC	Y
Driveway Connection	Septic Tank Number	LU & Zoning checked by	Approved for Issuance	New Resident

COMMENTS: NOC ON FILE

FLOOR ONE FOOT ABOVE THE ROAD

OWNER BUILDER DISCLOSURE ON FILE Check # or Cash 6450

FOR BUILDING & ZONING DEPARTMENT ONLY

(footer/Slab)

Temporary Power _____ date/app. by Foundation _____ date/app. by Monolithic _____ date/app. by

Under slab rough-in plumbing _____ date/app. by Slab _____ date/app. by Sheathing/Nailing _____ date/app. by

Framing _____ date/app. by Insulation _____ date/app. by

Rough-in plumbing above slab and below wood floor _____ date/app. by Electrical rough-in _____ date/app. by

Heat & Air Duct _____ date/app. by Peri. beam (Lintel) _____ date/app. by Pool _____ date/app. by

Permanent power _____ date/app. by C.O. Final _____ date/app. by Culvert _____ date/app. by

Pump pole _____ date/app. by Utility Pole _____ date/app. by M/H tie downs, blocking, electricity and plumbing _____ date/app. by

Reconnection _____ date/app. by RV _____ date/app. by Re-roof _____ date/app. by

BUILDING PERMIT FEE $ 835.00 CERTIFICATION FEE $ 16.64 SURCHARGE FEE $ 16.64

MISC. FEES $ 0.00 ZONING CERT. FEE $ 50.00 FIRE FEE $ 0.00 WASTE FEE $

FLOOD DEVELOPMENT FEE $ FLOOD ZONE FEE $ 25.00 CULVERT FEE $ **TOTAL FEE** 943.28

INSPECTORS OFFICE L.H. CLERKS OFFICE CH

NOTICE: IN ADDITION TO THE REQUIREMENTS OF THIS PERMIT, THERE MAY BE ADDITIONAL RESTRICTIONS APPLICABLE TO THIS PROPERTY THAT MAY BE FOUND IN THE PUBLIC RECORDS OF THIS COUNTY. AND THERE MAY BE ADDITIONAL PERMITS REQUIRED FROM OTHER GOVERNMENTAL ENTITIES SUCH AS WATER MANAGEMENT DISTRICTS, STATE AGENCIES, OR FEDERAL AGENCIES.

"WARNING TO OWNER: YOUR FAILURE TO RECORD A NOTICE OF COMMENCEMENT MAY RESULT IN YOUR PAYING TWICE FOR IMPROVEMENTS TO YOUR PROPERTY. IF YOU INTEND TO OBTAIN FINANCING, CONSULT WITH YOUR LENDER OR AN ATTORNEY BEFORE RECORDING YOUR NOTICE OF COMMENCEMENT."

EVERY PERMIT ISSUED SHALL BECOME INVALID UNLESS THE WORK AUTHORIZED BY SUCH PERMIT IS COMMENCED WITHIN 180 DAYS AFTER ITS ISSUANCE, OR IF THE WORK AUTHORIZED BY SUCH PERMIT IS SUSPENDED OR ABANDONED FOR A PERIOD OF 180 DAYS AFTER THE TIME THE WORK IS COMMENCED. A VALID PERMIT RECIEVES AN APPROVED INSPECTION EVERY 180 DAYS. WORK SHALL BE CONSIDERED NOT SUSPENDED, ABANDONED OR INVALID WHEN THE PERMIT HAS RECIEVED AN APPROVED INSPECTION WITHIN 180 DAYS OT THE PREVIOUS INSPECTION.

The Issuance of this Permit Does Not Waive Compliance by Permittee with Deed Restrictions.

DATE 08/26/2014

Columbia County Building Permit

This Permit Must Be Prominently Posted on Premises During Construction

PERMIT
000032235

APPLICANT MICHAEL HENDERSON PHONE 904-716-7276

ADDRESS 5378 PAINTED PONY AVE MELROSE FL 32666

OWNER MICHAEL & JANET HENDERSON PHONE 904-509-1450

ADDRESS 1061 SW ENGLISH STREET LAKE CITY FL 32025

CONTRACTOR MICHAEL & JANET HENDERSON PHONE 904-509-1450

LOCATION OF PROPERTY 441 S. R ENGLISH ST. GO .9 MILES ON RIGHT TO 1061

TYPE DEVELOPMENT RENEW 29696 SFD ESTIMATED COST OF CONSTRUCTION 0.00

HEATED FLOOR AREA _____ TOTAL AREA _____ HEIGHT ____ STORIES ____

FOUNDATION _____ WALLS _____ ROOF PITCH _____ FLOOR _____

LAND USE & ZONING AG-3 MAX. HEIGHT _____

Minimum Set Back Requirments: STREET-FRONT _____ REAR _____ SIDE _____

NO. EX.D.U. 1 FLOOD ZONE X DEVELOPMENT PERMIT NO. _____

PARCEL ID 16-5S-17-09270-001 SUBDIVISION AKA

LOT 3/4 BLOCK ____ PHASE ____ UNIT 0 TOTAL ACRES _____

		OWNER		
Culvert Permit No.	Culvert Waiver	Contractor's License Number		Applicant/Owner/Contractor
EXISTING	11-370		LH	N
Driveway Connection	Septic Tank Number	LU & Zoning checked by	Approved for Issuance	New Resident

COMMENTS: RENEW EXPIRED PERMIT

Check # or Cash CASH PAID

FOR BUILDING & ZONING DEPARTMENT ONLY

Temporary Power _____ date/app. by Foundation _____ date/app. by Monolithic _____ (footer/Slab) date/app. by

Under slab rough-in plumbing _____ date/app. by Slab _____ date/app. by Sheathing/Nailing _____ date/app. by

Framing _____ date/app. by Insulation _____ date/app. by

Rough-in plumbing above slab and below wood floor _____ date/app. by Electrical rough-in _____ date/app. by

Heat & Air Duct _____ date/app. by Peri. beam (Lintel) _____ date/app. by Pool _____ date/app. by

Permanent power _____ date/app. by C.O. Final _____ date/app. by Culvert _____ date/app. by

Pump pole _____ date/app. by Utility Pole _____ date/app. by M/H tie downs, blocking, electricity and plumbing _____ date/app. by

Reconnection _____ date/app. by RV _____ date/app. by Re-roof _____ date/app. by

BUILDING PERMIT FEE $ 0.00 CERTIFICATION FEE $ 0.00 SURCHARGE FEE $ 0.00

MISC. FEES $ 208.75 ZONING CERT. FEE $ ____ FIRE FEE $ 0.00 WASTE FEE $ _____

FLOOD DEVELOPMENT FEE $ ____ FLOOD ZONE FEE $ ____ CULVERT FEE $ ____ **TOTAL FEE** 208.75

INSPECTORS OFFICE _____ CLERKS OFFICE _____

NOTICE: IN ADDITION TO THE REQUIREMENTS OF THIS PERMIT, THERE MAY BE ADDITIONAL RESTRICTIONS APPLICABLE TO THIS PROPERTY THAT MAY BE FOUND IN THE PUBLIC RECORDS OF THIS COUNTY.

NOTICE: ALL OTHER APPLICABLE STATE OR FEDERAL PERMITS SHALL BE OBTAINED BEFORE COMMENCEMENT OF THIS PERMITTED DEVELOPMENT.

"WARNING TO OWNER: YOUR FAILURE TO RECORD A NOTICE OF COMMENCEMENT MAY RESULT IN YOUR PAYING TWICE FOR IMPROVEMENTS TO YOUR PROPERTY. IF YOU INTEND TO OBTAIN FINANCING, CONSULT WITH YOUR LENDER OR AN ATTORNEY BEFORE RECORDING YOUR NOTICE OF COMMENCEMENT."

EVERY PERMIT ISSUED SHALL BECOME INVALID UNLESS THE WORK AUTHORIZED BY SUCH PERMIT IS COMMENCED WITHIN 180 DAYS AFTER ITS ISSUANCE, OR IF THE WORK AUTHORIZED BY SUCH PERMIT IS SUSPENDED OR ABANDONED FOR A PERIOD OF 180 DAYS AFTER THE TIME THE WORK IS COMMENCED. A VALID PERMIT RECIEVES AN APPROVED INSPECTION EVERY 180 DAYS. WORK SHALL BE CONSIDERED NOT SUSPENDED, ABANDONED OR INVALID WHEN THE PERMIT HAS RECIEVED AN APPROVED INSPECTION WITHIN 180 DAYS OT THE PREVIOUS INSPECTION.

The Issuance of this Permit Does Not Waive Compliance by Permittee with Deed Restrictions.