S1/2 LOT 2 & ALL LOT 3 BLOCK 7 U
HILLS S/D.

COFIELD BOBBIE J
923 SE TEAKWOOD TERR
LAKE CITY, FL 32025

2023

00-00-00-07749-000

COLUMBIA COUNTY PROPERTY

BUILDING CHARACTERISTICS

ELEMENT	CD	CONSTRUCTION
Exterior Wall	19	COMMON BRK 80
Exterior Wall	31	VINYL SID 20
Roof Structur	03	GABLE/HIP 100
Roof Cover	03	COMP SHNGL 100
Interior Wall	05	DRYWALL 100
Interior Floo	14	CARPET 100
Air Condition	03	CENTRAL 100
Heating Type	04	AIR DUCTED 100
Bedrooms		3 100
Bathrooms		3 100
Frame	01	NONE 100
Stories	1.	1. 100
Architectual	05	CONV 100
Units		0 100
Condition Adj	03	03 100
Kitchen Adjus	01	01 100
Quality	07	07
DOR CODE	0100	SINGLE FAMILY
MAP NUM		MKT AREA 06
NEIGHBORHOOD/LOC	5417.0600	1.00/

AREA TYPE	TOTAL GROSS AREA	PCT OF BASE	TOT ADJ AREA	SUBAREA MARKET VALUE
BAS	1,131	100	1,131	84,638
BAS	1,781	100	1,781	133,281
FCP	618	25	154	11,525
FOP	90	30	27	2,021
FSP	294	40	118	8,830
FST	162	55	89	6,661
TOTALS	4,076		3,300	246,954

MARKET ADJUSTMENTS

TYPE	MDL	EFF. AREA	TOT ADJ PTS	EFF. BASE RATE	REPL. COST NEW	AYB	EYB	ECON	FNCT		NORM	% COND
0100	01	3,300	119.9308	115.13	379,929	1963	1963	0	0	0	35.00	65.00

1 SINGLE FAM - 100% - 2006 Heated Area: 2912 HX Base Yr 2006

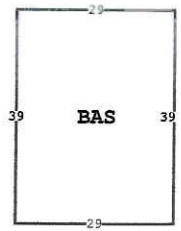

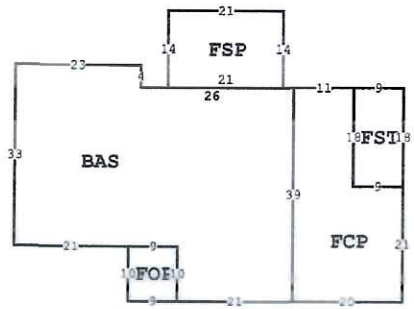

923 SE TEAKWOOD TER, LAKE CITY

BLD DATE		LGL DATE	
XF DATE		LAND DATE	04/27/2022 MLU
INC DATE		AG DATE	

COLUMBIA COUNTY PROPERTY VALUATION SUMMARY

VALUATION BY		STANDARD
Tax Group: 1	Tax Dist:	
BUILDING MARKET VALUE		246,954
TOTAL MARKET OB/XF VALUE		23,169
TOTAL LAND VALUE - MARKET		14,300
TOTAL MARKET VALUE		284,423
SOH/AGL Deduction		107,237
ASSESSED VALUE		177,186
TOTAL EXEMPTION VALUE	HX HB VX WX VP	106,874
BASE TAXABLE VALUE		70,312
TOTAL JUST VALUE		284,423
NCON VALUE		0
INCOME VALUE		
PREVIOUS YEAR MKT VALUE		

PERMIT NUM	DESCRIPTION	AMT	ISSUED
455	POOL	50	06/12/1995

SALES DATA

OFF RECORD Number	DATE	TYPE INST	Q U	V I	RSN CD	SALE PRICE
1425/451	11/18/2020	LE	U	I	14	100
GRANTOR: COFIELD BOBBIE J						
GRANTEE: COFIELD BOBBIE J						
0677/0194	2/24/1989	WD	Q	I		85,000
GRANTOR: SONKE PHILLIP						
GRANTEE: COFIELD CURTIS						

BUILDING NOTES

BUILDING DIMENSIONS

BAS= W2 FSP= N14 W21 S14 E21$ W26 N4 W23 S33 E21 FOP= S10E9 N10 W9$ E9 S10 E21 FCP= E20 N21FST= N18 W9 S18 E9$ W9N18 W11 S39$ N39$ PTR= N80 BAS= W29 S39 E29 N39$ S80$.

EXTRA FEATURES

LN	OB/XF CODE	DESCRIPTION	BLD	CAP	L	W	UNITS	UT	Adj R	ADJ UNIT PRICE	ORIG COND	YEAR ON	YEAR ACTUAL	Q	% COND	OB/XF MKT VALUE	NOTES
1	0166	CONC,PAVMT	0	100	0	0	1.00	UT	0.00	0.00	100	0	0	3	100	500	
2	0180	FPLC 1STRY	0	100	0	0	1.00	UT	2,000.00	2,000.00	100	0	0	3	100	2,000	
3	0280	POOL R/CON	0	100	32	16	512.00	UT	70.00	70.00	100	1995	1995	3	40	14,336	
4	0166	CONC,PAVMT	0	100	0	0	572.00	UT	1.50	1.50	100	1995	1995	3	100	858	
5	0120	CLFENCE 4	0	100	0	0	150.00	UT	2.50	2.50	100	1993	1993	3	100	375	
6	0282	POOL ENCL	0	100	0	0	850.00	UT	15.00	15.00	100	1996	1996	3	40	5,100	

LAND DESCRIPTION

TOTAL OB/XF 23,169

LN	USE CODE	CLS	LAND USE DESCRIPTION	CAP	RD	LOC ZONE	FRONT	DEPTH	TOT LND UTS	UNIT TYPE	DT	DPTH FACT	% COND	TOT ADJ	UNIT PRICE	ADJ UNIT PRICE	LAND VALUE	OTHER ADJUSTMENTS AND NOTES	YEAR	DENSITY	DECL	FRZ	YR	CONSRV
1	0100	C	SFR	100		*RSF	-290.00	159.00	14,300.00	SF		1.00	1.00	1.00	1.00	1.00	14,300							

REVIEW DATE 10/04/2016 BY DFRP Total Acres: 0.33 Total Land Value: 14,300 Market: 0 Agricultural: 0 Common: 14,300 PRINTED 08/23/2023 BY SYS