DATE 11/07/2005

Columbia County Building Permit

This Permit Expires One Year From the Date of Issue

PERMIT
000023831

APPLICANT MELANIE RODER PHONE 752-2281

ADDRESS 387 SW KEMP CT LAKE CITY FL 32025

OWNER MATTHEW ERKINGER PHONE 754-5555

ADDRESS 563 SW HEATHRIDE DR LAKE CITY FL 32025

CONTRACTOR MATTHEW ERKINGER PHONE 754-5555

LOCATION OF PROPERTY 90 WEST, L INTO EMERALD COVE, 1/2 MILE ON HEATHRIDGE DR TO TEEND AT THE CUL-DE-SAC

TYPE DEVELOPMENT SFD,UTILITY ESTIMATED COST OF CONSTRUCTION 104650.00

HEATED FLOOR AREA 2093.00 TOTAL AREA 2853.00 HEIGHT 23.00 STORIES 1

FOUNDATION CONCRETE WALLS FRAMED ROOF PITCH 7/12 FLOOR SLAB

LAND USE & ZONING RSF-2 MAX. HEIGHT 35

Minimum Set Back Requirments: STREET-FRONT 25.00 REAR 15.00 SIDE 10.00

NO. EX.D.U. 0 FLOOD ZONE XPP DEVELOPMENT PERMIT NO.

PARCEL ID 33-3S-16-02438-116 SUBDIVISION EMERALD COVE

LOT 16 BLOCK PHASE 1 UNIT TOTAL ACRES .50

000000883		RR067135	Melanie Rodr	
Culvert Permit No.	Culvert Waiver	Contractor's License Number	Applicant/Owner/Contractor	
CURB & GUTTER	05-1085-N	BK	JH	N
Driveway Connection	Septic Tank Number	LU & Zoning checked by	Approved for Issuance	New Resident

COMMENTS: FLOOR 1 FOOT ABOVE THE ROAD, NOC ON FILE
WAIVER PERMIT DONE DUE TO CURB AND GUTTER-WAITING ON INFO FROM ROAD

DEPARTMENT Check # or Cash 15091

FOR BUILDING & ZONING DEPARTMENT ONLY

Temporary Power _____ date/app. by
Foundation _____ date/app. by
Monolithic _____ date/app. by (footer/Slab)
Under slab rough-in plumbing _____ date/app. by
Slab _____ date/app. by
Sheathing/Nailing _____ date/app. by
Framing _____ date/app. by
Rough-in plumbing above slab and below wood floor _____ date/app. by
Electrical rough-in _____ date/app. by
Heat & Air Duct _____ date/app. by
Peri. beam (Lintel) _____ date/app. by
Permanent power _____ date/app. by
C.O. Final _____ date/app. by
Culvert _____ date/app. by
M/H tie downs, blocking, electricity and plumbing _____ date/app. by
Pool _____ date/app. by
Reconnection _____ date/app. by
Pump pole _____ date/app. by
Utility Pole _____ date/app. by
M/H Pole _____ date/app. by
Travel Trailer _____ date/app. by
Re-roof _____ date/app. by

BUILDING PERMIT FEE $ 525.00 CERTIFICATION FEE $ 14.27 SURCHARGE FEE $ 14.27

MISC. FEES $ .00 ZONING CERT. FEE $ 50.00 FIRE FEE $ .00 WASTE FEE $

FLOOD DEVELOPMENT FEE $ FLOOD ZONE FEE $ 25.00 CULVERT FEE $ **TOTAL FEE** 628.54

INSPECTORS OFFICE P.H. CLERKS OFFICE CH

NOTICE: IN ADDITION TO THE REQUIREMENTS OF THIS PERMIT, THERE MAY BE ADDITIONAL RESTRICTIONS APPLICABLE TO THIS PROPERTY THAT MAY BE FOUND IN THE PUBLIC RECORDS OF THIS COUNTY. AND THERE MAY BE ADDITIONAL PERMITS REQUIRED FROM OTHER GOVERNMENTAL ENTITIES SUCH AS WATER MANAGEMENT DISTRICTS, STATE AGENCIES, OR FEDERAL AGENCIES.

"WARNING TO OWNER: YOUR FAILURE TO RECORD A NOTICE OF COMMENCEMENT MAY RESULT IN YOUR PAYING TWICE FOR IMPROVEMENTS TO YOUR PROPERTY. IF YOU INTEND TO OBTAIN FINANCING, CONSULT WITH YOUR LENDER OR AN ATTORNEY BEFORE RECORDING YOUR NOTICE OF COMMENCEMENT."

This Permit Must Be Prominently Posted on Premises During Construction

PLEASE NOTIFY THE COLUMBIA COUNTY BUILDING DEPARTMENT AT LEAST 24 HOURS IN ADVANCE OF EACH INSPECTION, IN ORDER THAT IT MAY BE MADE WITHOUT DELAY OR INCONVIENCE, PHONE 758-1008. THIS PERMIT IS NOT VALID UNLESS THE WORK AUTHORIZED BY IT IS COMMENCED WITHIN 6 MONTHS AFTER ISSUANCE.

The Issuance of this Permit Does Not Waive Compliance by Permittee with Deed Restrictions.

Lot 16 Emerald Cove

Columbia County Building Permit Application

Revised 9-23-04

For Office Use Only Application # 0510-80 Date Received 10-27-05 By LH Permit # 883/23831
Application Approved by - Zoning Official BLK Date 01.11.05 Plans Examiner OK JTH Date 11-1-05
Flood Zone X Per PLAT Development Permit N/A Zoning RSF-2 Land Use Plan Map Category Res. Low Den.
Comments

Applicants Name Linda or Melanie Roder Phone 752-2281
Address 387 S.W. Kemp Ct. Lake City FL 32024
Owners Name Erkinger Home Builders Phone 754-5555
911 Address 563 SW Heathridge Dr. Lake City FL 32024
Contractors Name Matthew Erkinger Phone 754-5555
Address 248 S.E. Nassau St. Lake City FL 32025
Fee Simple Owner Name & Address NA
Bonding Co. Name & Address NA
Architect/Engineer Name & Address Matthew Erkinger / Mark Disosway
Mortgage Lenders Name & Address 1st Federal

Circle the correct power company - FL Power & Light - Clay Elec. - Suwannee Valley Elec. - Progressive Energy
Property ID Number 33-3S-16-02438-016 Estimated Cost of Construction 140,000
Subdivision Name Emerald Cove Lot 16 Block ___ Unit ___ Phase 1
Driving Directions 90 West 3/4 mi past Brown Rd go left on Emerald Cove Entrance, go ½ mile on Heatheridge Dr., go to end of road, lot is at end, in Cul de Sac

Type of Construction SFD Number of Existing Dwellings on Property 0
Total Acreage ___ Lot Size .5 Do you need a - Culvert Permit or Culvert Waiver or Have an Existing Drive
Actual Distance of Structure from Property Lines - Front 35' Side 39' Side 37' Rear 107'
Total Building Height 23' Number of Stories 1 Heated Floor Area 2093 Roof Pitch 7-12
Porches 218 GARAGE 542 TOTAL 2853

Application is hereby made to obtain a permit to do work and installations as indicated. I certify that no work or installation has commenced prior to the issuance of a permit and that all work be performed to meet the standards of all laws regulating construction in this jurisdiction.

OWNERS AFFIDAVIT: I hereby certify that all the foregoing information is accurate and all work will be done in compliance with all applicable laws and regulating construction and zoning.

WARNING TO OWNER: YOUR FAILURE TO RECORD A NOTICE OF COMMENCMENT MAY RESULT IN YOU PAYING TWICE FOR IMPROVEMENTS TO YOUR PROPERTY. IF YOU INTEND TO OBTAIN FINANCING, CONSULT WITH YOUR LENDER OR ATTORNEY BEFORE RECORDING YOUR NOTICE OF COMMENCEMENT.

Owner Builder or Agent (Including Contractor) Linda R. Roder
Commission #DD303275
Expires: Mar 24, 2008
Bonded Thru
Atlantic Bonding Co., Inc.

STATE OF FLORIDA
COUNTY OF COLUMBIA

Sworn to (or affirmed) and subscribed before me
this 1 day of September 20 05.
Personally known ___ or Produced Identification ___

X Contractor Signature
Contractors License Number RR-067135
Competency Card Number
NOTARY STAMP/SEAL

Notary Signature

BUILDING SET BACKS:

FRONT: 25 FEET
SIDE: 10 FEET

N 38°43'40"W	42.43'
S 51°16'20"W	42.43'
N 38°43'40"W	42.43'
N 06°16'20"E	21.28'
S 79°16'05"W	30.00'
N 06°16'20"E	40.51'
S 80°11'22"W	30.43'
S 80°11'22"W	30.38'
S 79°16'05"W	30.00'
N 35°12'20"E	5.02'
S 35°12'20"W	2.81

4	10°31'51"	350.00	64.33	32.26	64.24	S 78°27'45"E
5	5°11'01"	600.00	54.28	27.16	54.27	S 8°51'51"W
6	4°16'36"	600.00	44.79	22.40	44.77	S 12°52'13"E
7	16°37'03"	600.00	174.02	87.62	173.41	S 14°34'52"W
8	23°21'07"	600.00	244.54	123.99	242.85	S 11°12'50"W
10	31°48'42"	600.00	333.13	170.98	328.87	S 0°53'50"W
12	28°56'00"	420.00	212.09	108.36	209.85	S 20°44'20"W
13	90°00'00"	320.00	502.65	320.00	452.55	S 38°43'40"E
14	41°24'35"	30.00	21.68	11.34	21.21	N 75°34'03"E
15	172°49'09"	50.00	150.81	796.86	99.80	S 38°43'40"E
16	41°24'35"	30.00	21.68	11.34	21.21	S 26°58'37"W
17	5°11'01"	630.00	57.00	28.52	56.98	S 8°51'51"W
24	5°11'01"	570.00	51.57	25.80	51.55	N 8°51'51"E
25	16°37'03"	630.00	182.72	92.01	182.08	S 14°34'52"W
26	22°51'19"	570.00	227.37	115.22	225.87	S 11°27'44"W
33	23°48'03"	630.00	261.70	132.77	259.83	S 10°59'22"W
34	16°37'03"	570.00	165.32	83.24	164.74	N 14°34'52"E
35	31°48'42"	570.00	316.47	162.43	312.43	S 0°53'50"W
42	31°48'42"	630.00	349.79	179.53	345.31	N 0°53'50"E
43	70°25'00"	380.00	467.02	268.14	438.18	N 28°56'10"W
44	28°40'11"	480.00	240.18	122.66	237.68	N 20°36'25"E
45	17°55'35"	420.00	131.41	66.24	130.87	S 26°14'33"W
46	11°00'25"	420.00	80.69	40.47	80.56	S 11°46'33"W
47	16°05'49"	320.00	89.90	45.25	89.61	S 1°46'35"E
48	44°51'20"	320.00	250.52	132.08	244.17	S 32°15'09"E
49	3°40'27"	320.00	20.52	10.26	20.52	S 56°31'03"E
50	23°47'23"	320.00	132.87	67.40	131.91	S 70°14'58"E
51	1°35'01"	320.00	8.84	4.42	8.84	S 82°56'10"E
52	53°27'47"	50.00	46.66	25.18	44.98	N 81°35'39"E
53	73°44'23"	50.00	64.35	37.50	60.00	S 34°48'16"E
54	45°36'59"	50.00	39.81	21.03	38.76	S 24°52'25"W
62	11°04'28"	630.00	121.77	61.08	121.58	S 11°48'34"W
63	5°32'35"	630.00	60.95	30.50	60.93	S 20°07'06"W
64	8°45'03"	570.00	87.06	43.61	86.97	S 18°30'52"W
65	14°06'15"	570.00	140.31	70.51	139.96	S 7°05'12"W
81	9°54'02"	630.00	108.86	54.57	108.73	S 5°51'41"E
82	12°53'04"	630.00	141.67	71.14	141.37	N 5°31'52"E
83	7°16'50"	630.00	80.05	40.08	80.00	N 15°36'49"E
84	3°38'09"	630.00	39.98	20.00	39.97	N 21°04'19"E
85	4°01'28"	570.00	40.04	20.03	40.03	N 20°52'39"E
86	12°35'35"	570.00	125.28	62.89	125.03	N 12°34'07"E
87	8°53'27"	570.00	88.45	44.31	88.36	S 12°21'28"W
88	17°29'56"	570.00	174.09	87.73	173.41	S 0°50'14"E
89	5°25'20"	570.00	53.94	26.99	53.92	S 12°17'51"E
90	4°16'36"	630.00	47.02	23.52	47.01	S 12°52'13"E
100	4°16'36"	570.00	42.55	21.28	42.54	N 12°52'13"W
101	12°32'25"	630.00	137.89	69.22	137.61	N 8°44'19"W
102	11°41'56"	630.00	128.64	64.54	128.41	N 3°22'52"E
103	7°34'21"	630.00	83.26	41.69	83.20	N 13°01'00"E
104	37°46'47"	380.00	250.56	130.03	246.05	N 45°15'16"W
105	32°38'13"	380.00	216.46	111.25	213.54	N 10°02'46" W

FLOOD ZONE INFORMATION:

THE PROPERTY AS SURVEYED FALLS WITHIN ZONE "X" AS PER THE FLOOD INSURANCE RATE MAP OF THE FEDERAL EMERGENCY MANAGEMENT AGENCY PANEL NO. 120070 0175B

UTILITY EASEMENT DETAIL:

DENOTES 20' UTILITY EASEMENT ALONG ROAD RIGHTS-OF-WAY. EASEMENTS FOR UTILITIES SHALL ALSO BE EASEMENTS FOR THE CONSTRUCTION, INSTALLATION, MAINTENANCE AND OPERATION OF CABLE TELEVISION SERVICES.

CERTIFICATE OF SUBDIVIDER'S ENGINEER

THIS IS TO CERTIFY THAT ON THIS 29 OF JULY, 2005, GARY GILL, REGISTERED FLORIDA ENGINEER, AS SPECIFIED WITHIN CHAPTER 471, FLORIDA STATUTES, LICENSE NO. 51942, DOES HEREBY CERTIFY THAT ALL REQUIRED IMPROVEMENTS HAVE BEEN INSTALLED IN COMPLIANCE WITH THE APPROVED CONSTRUCTION PLANS AND IFF APPLICABLE, ANY SUBMITTED "AS-BUILT" BLUEPRINTS IN ACCORDANCE WITH THE REQUIREMENTS OF THE BOARD OF COUNTY COMMISSIONERS OF COLUMBIA COUNTY, FLORIDA.

REGISTERED FLORIDA ENGINEER

LINE OF
LAKE PHASE 3

PREPARED BY AND RETURN TO:

TERRY McDAVID
POST OFFICE BOX 1328
LAKE CITY, FL 32056-1328

Inst:2005023270 Date:09/21/2005 Time:14:55

Property Appraiser's Identification Number 02438-000 02421-000 Doc Stamp-Deed : 245.00 YMK DC,P.DeWitt Cason,Columbia County B:1059 P:344

TM File No: 05-789

WARRANTY DEED

This Warranty Deed, made this 16th day of September, 2005, BETWEEN D D P CORPORATION, a Florida corporation, whose post office address is 4158 US Highway 90 West, Lake City, Florida 32055, of the County of Columbia, State of Florida, grantor, and ERKINGER HOME BUILDERS, INC., a Florida Corporation, whose post office address is 248 SE Nassau St., Lake City, Florida 32025, grantee.

(Whenever used herein the terms "grantor" and "grantee" include all the parties to this instrument and the heirs, legal representatives and assigns of individuals, and the successors and assigns of corporations, trusts and trustees)

Witnesseth: that said grantor, for and in consideration of the sum of Ten Dollars ($10.00), and other good and valuable considerations to said grantor in hand paid by said grantee, the receipt whereof is hereby acknowledged, has granted, bargained and sold to the said grantee, and grantee's heirs and assigns forever, the following described land, situate, lying and being in Columbia County, Florida, to-wit:

Lot 16, Emerald Cove, Phase 1, a subdivision according to the plat thereof recorded in Plat Book 8, Pages 35-36, public records, Columbia County, Florida.

Together with all the tenements, hereditaments and appurtenances thereto belonging or in anywise appertaining.

To Have and to Hold, the same in fee simple forever.

And subject to taxes for the current year and later years and all valid easements and restrictions of record, if any, which are not hereby reimposed; and also subject to any claim, right, title or interest arising from any recorded instrument reserving, conveying, leasing, or otherwise alienating any interest in the oil, gas and other minerals. And grantor does warrant the title to said land and will defend the same against the lawful claims of all persons whomsoever, subject only to the exceptions set forth herein.

Application for Onsite Sewage Disposal System Construction Permit. Part II Site Plan

Permit Application Number: 05-1085N

ALL CHANGES MUST BE APPROVED BY THE COUNTY HEALTH UNIT

ERKINGER/CR 05-3148

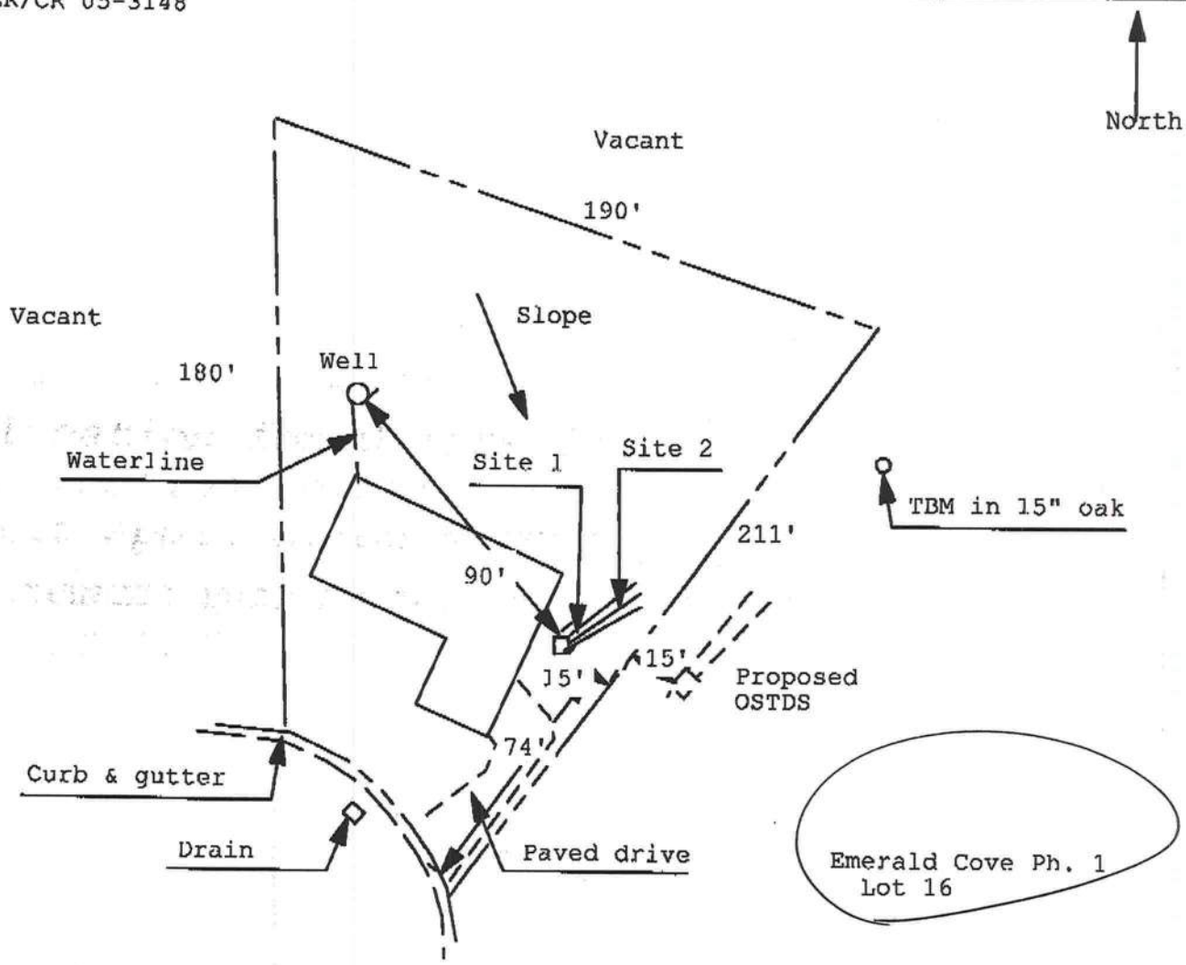

1 inch = 50 feet

Site Plan Submitted By Paul [illegible] **Date** 10/24/05

Plan Approved ✓ **Not Approved** ____ **Date** 10/25/05

By [illegible] Columbia **CPHU**

Notes:

PREPARED BY AND RETURN TO:

TERRY McDAVID
POST OFFICE BOX 1328
LAKE CITY, FL 32056-1328

File No. 05-789

Inst:2005023272 Date:09/21/2005 Time:14:57
MK DC,P.DeWitt Cason,Columbia County B:1059 P:354

PERMIT NO._____ TAX FOLIO NO.:02438-000 & 02421-000

NOTICE OF COMMENCEMENT

STATE OF FLORIDA
COUNTY OF COLUMBIA

The undersigned hereby gives notice that improvement will be made to certain real property, and in accordance with Chapter 713, Florida Statutes, the following information is provided in this Notice of Commencement.

1. Description of property:

Lot 16, Emerald Cove, Phase 1, a subdivision according to the plat thereof recorded in Plat Book 8, Pages 35-36, public records, Columbia County, Florida.

2. General description of improvement: Construction of dwelling

3. Owner information:

a. Name and address: Erkinger Home Builders, Inc., 248 SE Nassau St., Lake City, Florida 32025.

b. Interest in property: Fee Simple

c. Name and address of fee simple title holder (if other than Owner):

4. Contractor: Erkinger Home Builders, Inc., 248 SE Nassau St., Lake City, Florida 32025.

5. Surety

a. Name and address: None

b. Amount of bond:

6. Lender: FIRST FEDERAL SAVINGS BANK OF FLORIDA, 4705 West US Highway 90, Lake City, Florida 32055.

7. Persons within the State of Florida designated by Owner upon whom notices or other documents may be served as provided by Section 713.13(1)(a)7., Florida Statutes: None

8. In addition to himself, Owner designates Attn: Teresa Davis, FIRST FEDERAL SAVINGS BANK OF FLORIDA, 4705 West US Highway 90, Lake City, Florida 32055, to receive a copy of the Lienor's Notice as provided in Section 713.13(1)(b), Florida Statutes.

9. Expiration date of notice of commencement (the expiration date is 1 year from the date of recording unless a different date is specified). September 16, 2006.

STATE OF FLORIDA, COUNTY OF COLUMBIA
I HEREBY CERTIFY, that the above and foregoing is a true copy of the original filed in this office.
P. DeWITT CASON, CLERK OF COURTS
By Marcel Kun Deputy Clerk
Date Sept 21, 2005

CLERK CIRCUIT COURT COLUMBIA COUNTY, FLORIDA

ERKINGER HOME BUILDERS, INC.

By: Matthew A. Erkinger, Sr.
President

The foregoing instrument was acknowledged before me this 16th day of September, 2005, by Matthew A. Erkinger, Sr., President of Erkinger Home Builders, Inc., a Florida corporation, on behalf of the corporation. He is personally known to me and did not take an oath.

KAREN M. WRIGHT
Notary Public - State of Florida
My Commission Expires Jan 23, 2008
Commission # DD086234
Bonded By National Notary Assn.

Notary Public
My commission expires:_____

Erkinger Lot 16 Emerald Cove
Site Plan

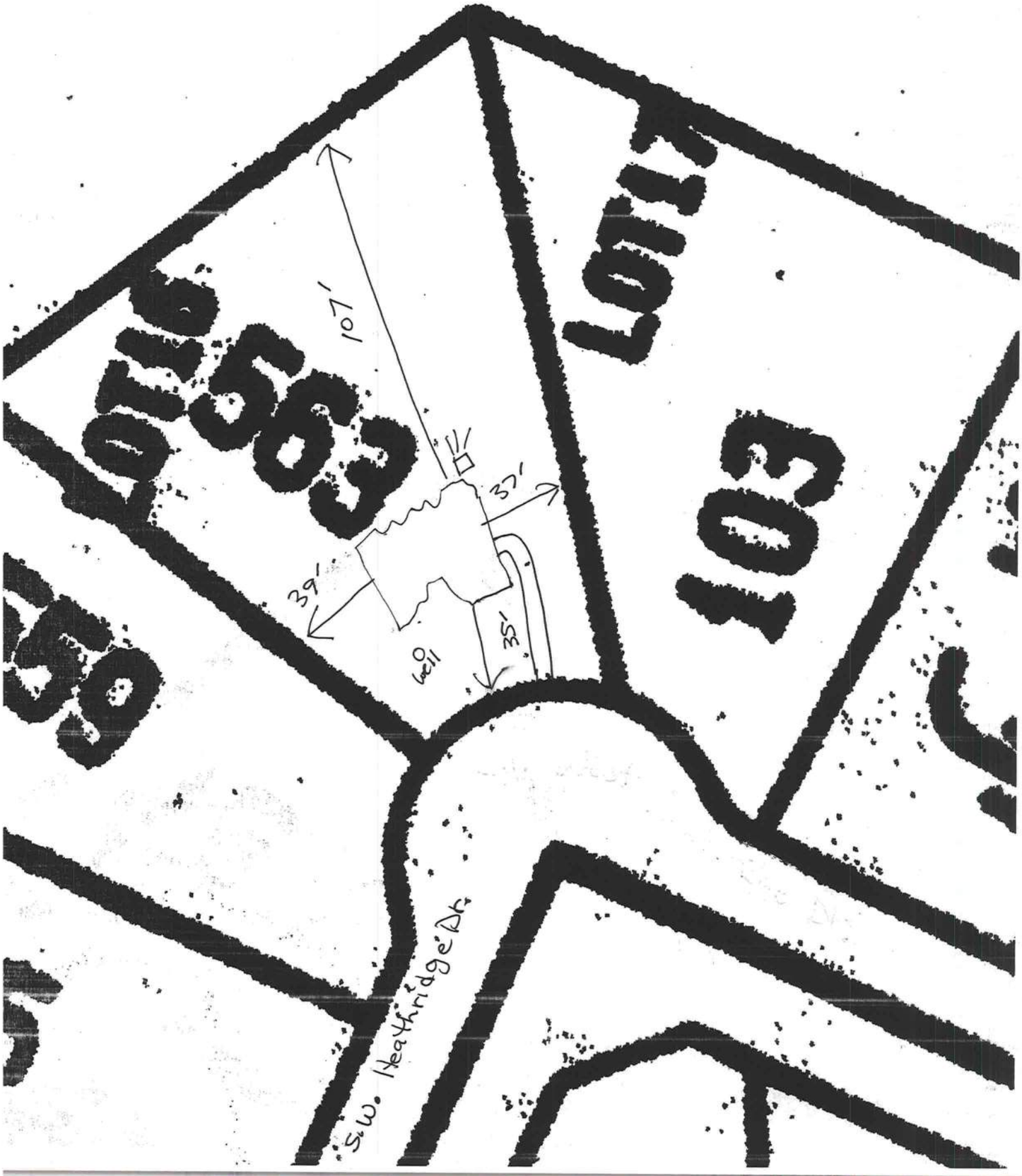

ASPEN PEST CONTROL, INC.

Phone (386) 755-3611
Fax (386) 752-5381

Notice of Intent for Preventative Treatment for Termites

(As required by Florida Building Code (FBC) 104.2.6)

Aspen Pest Control, Inc.
(386) 755-3611
State License # - JB109476
State Certification # - JF104376

Lot # 16 Emerald Cove – Lake City, Fl 32055

Address of Treatment or Lot/Block of Treatment

Bora-Care Wood Treatment – 23% Disodium Octaborate Tetrahydrate

Method of Termite Prevention Treatment – Soil Barrier, Wood Treatment, Bait System, Other

Application onto Structural Wood

Description of Treatment

The above named structure will receive a complete treatment for the prevention of subterranean termites at the dried-in stage of construction. Treatment is done in accordance with the rules and laws established by the Florida Department of Agriculture and Consumer Services and according to EPA registered label directions as stated in Florida Building Code Section 1861.1.8.

Susie Zaeny — 9-12-05

Authorized Signature — Date

752-2282

CLYATT WELL DRILLING, INC.

Established in 1977
Post Office Box 180
Worthington Springs, Florida 32697
Phone (386)496-2488 FAX (386)496-4640

INVOICE DATE	INVOICE NUMBER
3/31/2003	WELL SPECS

DUE AND PAYABLE UPON RECEIPT

CUSTOMER NAME AND ADDRESS	DESCRIPTION OF WORK
Erkinger Home Builders Attn.: Matthew A. Erkinger 248 Southeast Nassau Street Lake City, Florida 32025	4" Well and Pump

QTY	DESCRIPTION	PRICE	SUB-TOTAL
	Feet 4" Well 1 HP Submersible Pump 1-1/4" Galvanized Pipe 14/3 Submersible Pump Wire With Ground WF255 (220 Gallon Equivalent) Tank 4 X 1-1/4 Well Seal Pressure Relief Valve Controls & Fittings		

From: The Columbia County Building Department
Plans Review
135 NE Hernando Av.
P. O Box 1529
Lake City Florida, 32056-1529

Reference to: Build permit application Number: 0510-80

Erkinger Home Builders Owner Erkinger Home Builders lot 16 of Emerald Cove Subdivision

On the date of November 2, 2005 application 0510-80 and plans for construction of a single family dwelling were reviewed and the following information or alteration to the plans will be required to continue processing this application. If you should have any question please contact the above address, or contact phone number (386) 758-1163 or fax any information to (386) 754-7088.

Please include application number 0510-81 when making reference to this application.

1. Application 0510-80 which was filed with the building department on the date of October 27, 2005 will be reviewed under the Florida Building Code 2004. The Wind Load design by Mr. Mark Disosway was design under the Florida Building Code 2001. The wind Load design should reflect the code sections of the Florida Building Code 2004 that relate to wind Load design code requirements.

2. Please show compliance with sections R309 of the FRC-2004 R309.1 Opening protection. Openings from a private garage directly into a room used for sleeping purposes shall not be permitted. Other openings between the garage and residence shall be equipped with solid wood doors not less than 13/8 inches (35 mm) in thickness, solid or honeycomb core steel doors not less than 13/8 inches (35 mm) thick, or 20-minute fire-rated doors. R309.1.1 Duct penetration: Ducts in the garage and ducts penetrating the

walls or ceilings separating the dwelling from the garage shall be constructed of a minimum No. 26 gage (0.48 mm) sheet steel or other approved material and shall have no openings into the garage. R309.2 Separation required: The garage shall be separated from the residence and its attic area by not less than ½-inch (12.7 mm) gypsum board applied to the garage side. Garages beneath habitable rooms shall be separated from all habitable rooms above by not less than 5/8-inch (15.9 mm) Type X gypsum board or equivalent. Where the separation is a floor-ceiling assembly, the structure supporting the separation shall also be protected by not less than ½-inch (12.7 mm) gypsum board or equivalent.

Thank you,

Joe Haltiwanger
Plan Examiner
Columbia County Building Department

FORM 600A-2001

EnergyGauge® 3.4

FLORIDA ENERGY EFFICIENCY CODE FOR BUILDING CONSTRUCTION

Florida Department of Community Affairs

Residential Whole Building Performance Method A

Project Name:	**Lt 16 Phase 1 Emerald Cove**	Builder:	**Erkinger Homes**
Address:		Permitting Office:	Columbia County
City, State:	**Lake City, Fl**	Permit Number:	23831
Owner:	**Erkinger Homes**	Jurisdiction Number:	221000
Climate Zone:	**North**		

1. New construction or existing		New	
2. Single family or multi-family		Single family	
3. Number of units, if multi-family		1	
4. Number of Bedrooms		3	
5. Is this a worst case?		No	
6. Conditioned floor area (ft²)		2093 ft²	
7. Glass area & type	Single Pane	Double Pane	
a. Clear glass, default U-factor	0.0 ft²	307.0 ft²	
b. Default tint, default U-factor	0.0 ft²	0.0 ft²	
c. Labeled U-factor or SHGC	0.0 ft²	0.0 ft²	
8. Floor types			
a. Slab-On-Grade Edge Insulation		R=0.0, 194.0(p) ft	
b. N/A			
c. N/A			
9. Wall types			
a. Frame, Wood, Exterior		R=11.0, 1433.0 ft²	
b. Frame, Wood, Adjacent		R=11.0, 155.0 ft²	
c. N/A			
d. N/A			
e. N/A			
10. Ceiling types			
a. Under Attic		R=30.0, 2093.0 ft²	
b. N/A			
c. N/A			
11. Ducts			
a. Sup: Unc. Ret: Unc. AH: Interior		Sup. R=6.0, 190.0 ft	
b. N/A			

12. Cooling systems		
a. Central Unit	Cap: 42.0 kBtu/hr	
	SEER: 10.00	
b. N/A		
c. N/A		
13. Heating systems		
a. Electric Heat Pump	Cap: 42.0 kBtu/hr	
	HSPF: 7.00	
b. N/A		
c. N/A		
14. Hot water systems		
a. Electric Resistance	Cap: 50.0 gallons	
	EF: 0.91	
b. N/A		
c. Conservation credits (HR-Heat recovery, Solar DHP-Dedicated heat pump)		
15. HVAC credits (CF-Ceiling fan, CV-Cross ventilation, HF-Whole house fan, PT-Programmable Thermostat, MZ-C-Multizone cooling, MZ-H-Multizone heating)		

Glass/Floor Area: 0.15

Total as-built points: 29278
Total base points: 30005

PASS

I hereby certify that the plans and specifications covered by this calculation are in compliance with the Florida Energy Code.

PREPARED BY: _____

DATE: 9-26-05

I hereby certify that this building, as designed, is in compliance with the Florida Energy Code.

OWNER/AGENT: _____

DATE: 10-3-05

Review of the plans and specifications covered by this calculation indicates compliance with the Florida Energy Code. Before construction is completed this building will be inspected for compliance with Section 553.908 Florida Statutes.

GREAT SEAL OF THE STATE OF FLORIDA — IN GOD WE TRUST

BUILDING OFFICIAL: _____

DATE: _____

SUMMER CALCULATIONS

Residential Whole Building Performance Method A - Details

ADDRESS: , **Lake City, Fl,** PERMIT #:

BASE

GLASS TYPES .18 X Conditioned Floor Area	X BSPM	= Points
.18 2093.0	20.04	7549.9

WALL TYPES	Area X BSPM	= Points
Adjacent	155.0 0.70	108.5
Exterior	1433.0 1.70	2436.1
Base Total:	**1588.0**	**2544.6**

DOOR TYPES	Area X BSPM	= Points
Adjacent	21.0 2.40	50.4
Exterior	0.0 0.00	0.0
Base Total:	**21.0**	**50.4**

CEILING TYPES	Area X BSPM	= Points
Under Attic	2093.0 1.73	3620.9
Base Total:	**2093.0**	**3620.9**

FLOOR TYPES	Area X BSPM	= Points
Slab	194.0(p) -37.0	-7178.0
Raised	0.0 0.00	0.0
Base Total:		**-7178.0**

INFILTRATION	Area X BSPM	= Points
	2093.0 10.21	21369.5

AS-BUILT

Type/SC	Overhang Ornt	Len	Hgt	Area X SPM X SOF	= Points
Double, Clear	N	1.5	8.0	99.0 19.20 0.97	1838.6
Double, Clear	E	1.5	8.0	6.0 42.06 0.96	241.7
Double, Clear	S	1.5	8.0	198.0 35.87 0.92	6556.8
Double, Clear	W	1.5	8.0	4.0 38.52 0.96	147.6
As-Built Total:				**307.0**	**8784.7**

Type	R-Value	Area X SPM	= Points
Frame, Wood, Exterior	11.0	1433.0 1.70	2436.1
Frame, Wood, Adjacent	11.0	155.0 0.70	108.5
As-Built Total:		**1588.0**	**2544.6**

Type	Area X SPM	= Points
Adjacent Wood	21.0 2.40	50.4
As-Built Total:	**21.0**	**50.4**

Type	R-Value	Area X SPM X SCM	= Points
Under Attic	30.0	2093.0 1.73 X 1.00	3620.9
As-Built Total:		**2093.0**	**3620.9**

Type	R-Value	Area X SPM	= Points
Slab-On-Grade Edge Insulation	0.0	194.0(p -41.20	-7992.8
As-Built Total:		**194.0**	**-7992.8**

	Area X SPM	= Points
	2093.0 10.21	21369.5

SUMMER CALCULATIONS

Residential Whole Building Performance Method A - Details

ADDRESS: **, Lake City, Fl,** PERMIT #:

BASE				AS-BUILT							
Summer Base Points:			**27957.3**	**Summer As-Built Points:**							**28377.3**
Total Summer Points	X System Multiplier	=	Cooling Points	Total Component	X Cap Ratio	X Duct Multiplier (DM x DSM x AHU)	X System Multiplier	X Credit Multiplier	= Cooling Points		
27957.3	**0.4266**		**11926.6**	28377.3 **28377.3**	1.000 **1.00**	(1.090 x 1.147 x 0.91) **1.138**	0.341 **0.341**	1.000 **1.000**	11018.9 **11018.9**		

WINTER CALCULATIONS

Residential Whole Building Performance Method A - Details

ADDRESS: , Lake City, Fl, PERMIT #:

BASE				AS-BUILT							
GLASS TYPES .18 X Conditioned Floor Area	X BWPM	= Points		Type/SC	Overhang Ornt	Len	Hgt	Area X	WPM X	WOF	= Points
.18	2093.0	12.74	4799.7	Double, Clear	N	1.5	8.0	99.0	24.58	1.00	2435.3
				Double, Clear	E	1.5	8.0	6.0	18.79	1.02	115.0
				Double, Clear	S	1.5	8.0	198.0	13.30	1.04	2741.0
				Double, Clear	W	1.5	8.0	4.0	20.73	1.01	83.8
				As-Built Total:				**307.0**			**5375.2**
WALL TYPES	Area X	BWPM =	Points	Type		R-Value		Area X	WPM =		Points
Adjacent	155.0	3.60	558.0	Frame, Wood, Exterior		11.0		1433.0	3.70		5302.1
Exterior	1433.0	3.70	5302.1	Frame, Wood, Adjacent		11.0		155.0	3.60		558.0
Base Total:	**1588.0**		**5860.1**	**As-Built Total:**				**1588.0**			**5860.1**
DOOR TYPES	Area X	BWPM =	Points	Type				Area X	WPM =		Points
Adjacent	21.0	11.50	241.5	Adjacent Wood				21.0	11.50		241.5
Exterior	0.0	0.00	0.0								
Base Total:	**21.0**		**241.5**	**As-Built Total:**				**21.0**			**241.5**
CEILING TYPES	Area X	BWPM =	Points	Type		R-Value		Area X	WPM X	WCM =	Points
Under Attic	2093.0	2.05	4290.6	Under Attic		30.0		2093.0	2.05 X	1.00	4290.6
Base Total:	**2093.0**		**4290.6**	**As-Built Total:**				**2093.0**			**4290.6**
FLOOR TYPES	Area X	BWPM =	Points	Type		R-Value		Area X	WPM =		Points
Slab	194.0(p)	8.9	1726.6	Slab-On-Grade Edge Insulation		0.0		194.0(p	18.80		3647.2
Raised	0.0	0.00	0.0								
Base Total:			**1726.6**	**As-Built Total:**				**194.0**			**3647.2**
INFILTRATION	Area X	BWPM =	Points					Area X	WPM =		Points
	2093.0	-0.59	-1234.9					2093.0	-0.59		-1234.9

WINTER CALCULATIONS

Residential Whole Building Performance Method A - Details

ADDRESS: , **Lake City, Fl,** PERMIT #:

BASE				AS-BUILT							
Winter Base Points:			**15683.6**	**Winter As-Built Points:**							**18179.7**
Total Winter Points	X System Multiplier	=	Heating Points	Total Component	X Cap Ratio	X Duct Multiplier (DM x DSM x AHU)	X System Multiplier	X Credit Multiplier	= Heating Points		
15683.6	**0.6274**		**9839.9**	18179.7 **18179.7**	1.000 **1.00**	(1.069 x 1.169 x 0.93) **1.162**	0.487 **0.487**	1.000 **1.000**	10292.5 **10292.5**		

WATER HEATING & CODE COMPLIANCE STATUS

Residential Whole Building Performance Method A - Details

ADDRESS: , **Lake City, Fl,** PERMIT #:

BASE				AS-BUILT							
WATER HEATING											
Number of Bedrooms	X	Multiplier	= Total	Tank Volume	EF	Number of Bedrooms	X	Tank Ratio	X Multiplier	X Credit Multiplier	= Total
3		2746.00	8238.0	50.0	0.91	3		1.00	2655.47	1.00	7966.4
				As-Built Total:							**7966.4**

CODE COMPLIANCE STATUS

BASE				AS-BUILT			
Cooling Points +	Heating Points +	Hot Water Points =	Total Points	Cooling Points +	Heating Points +	Hot Water Points =	Total Points
11927	**9840**	**8238**	**30005**	**11019**	**10292**	**7966**	**29278**

PASS

FORM 600A-2001 EnergyGauge® 3.4

Code Compliance Checklist

Residential Whole Building Performance Method A - Details

ADDRESS: , Lake City, Fl,	PERMIT #:

6A-21 INFILTRATION REDUCTION COMPLIANCE CHECKLIST

COMPONENTS	SECTION	REQUIREMENTS FOR EACH PRACTICE	CHECK
Exterior Windows & Doors	606.1.ABC.1.1	Maximum:.3 cfm/sq.ft. window area; .5 cfm/sq.ft. door area.	
Exterior & Adjacent Walls	606.1.ABC.1.2.1	Caulk, gasket, weatherstrip or seal between: windows/doors & frames, surrounding wall; foundation & wall sole or sill plate; joints between exterior wall panels at corners; utility penetrations; between wall panels & top/bottom plates; between walls and floor. EXCEPTION: Frame walls where a continuous infiltration barrier is installed that extends from, and is sealed to, the foundation to the top plate.	
Floors	606.1.ABC.1.2.2	Penetrations/openings >1/8" sealed unless backed by truss or joint members. EXCEPTION: Frame floors where a continuous infiltration barrier is installed that is sealed to the perimeter, penetrations and seams.	
Ceilings	606.1.ABC.1.2.3	Between walls & ceilings; penetrations of ceiling plane of top floor; around shafts, chases, soffits, chimneys, cabinets sealed to continuous air barrier; gaps in gyp board & top plate; attic access. EXCEPTION: Frame ceilings where a continuous infiltration barrier is installed that is sealed at the perimeter, at penetrations and seams.	
Recessed Lighting Fixtures	606.1.ABC.1.2.4	Type IC rated with no penetrations, sealed; or Type IC or non-IC rated, installed inside a sealed box with 1/2" clearance & 3" from insulation; or Type IC rated with < 2.0 cfm from conditioned space, tested.	
Multi-story Houses	606.1.ABC.1.2.5	Air barrier on perimeter of floor cavity between floors.	
Additional Infiltration reqts	606.1.ABC.1.3	Exhaust fans vented to outdoors, dampers; combustion space heaters comply with NFPA, have combustion air.	

6A-22 OTHER PRESCRIPTIVE MEASURES (must be met or exceeded by all residences.)

COMPONENTS	SECTION	REQUIREMENTS	CHECK
Water Heaters	612.1	Comply with efficiency requirements in Table 6-12. Switch or clearly marked circuit breaker (electric) or cutoff (gas) must be provided. External or built-in heat trap required.	
Swimming Pools & Spas	612.1	Spas & heated pools must have covers (except solar heated). Non-commercial pools must have a pump timer. Gas spa & pool heaters must have a minimum thermal efficiency of 78%.	
Shower heads	612.1	Water flow must be restricted to no more than 2.5 gallons per minute at 80 PSIG.	
Air Distribution Systems	610.1	All ducts, fittings, mechanical equipment and plenum chambers shall be mechanically attached, sealed, insulated, and installed in accordance with the criteria of Section 610. Ducts in unconditioned attics: R-6 min. insulation.	
HVAC Controls	607.1	Separate readily accessible manual or automatic thermostat for each system.	
Insulation	604.1, 602.1	Ceilings-Min. R-19. Common walls-Frame R-11 or CBS R-3 both sides. Common ceiling & floors R-11.	

New Construction Subterranean Termite Soil Treatment Record

OMB Approval No. 2502-0525
(exp. 10/31/2005)

This form is completed by the licensed Pest Control Company.

Public reporting burden for this collection of information is estimated to average 15 minutes per response, including the time for reviewing instructions, searching existing data sources, gathering and maintaining the data needed, and completing and reviewing the collection of information. This information is mandatory and is required to obtain benefits. HUD may not collect this information, and you are not required to complete this form, unless it displays a currently valid OMB control number.
Section 24 CFR 200.926d(b)(3) requires that the sites for HUD insured structures must be free of termite hazards. This information collection requires the builder to certify that an authorized Pest Control company performed all required treatment for termites, and that the builder guarantees the treated area against infestation for one year. Builders, pest control companies, mortgage lenders, homebuyers, and HUD as a record of treatment for specific homes will use the information collected. The information is not considered confidential.

This report is submitted for informational purposes to the builder on proposed (new) construction cases when soil treatment for prevention of subterranean termite infestation is specified by the builder, architect, or required by the lender, architect, FHA, or VA.

All contracts for services are between the Pest Control Operator and builder, unless stated otherwise. # 23831

Section 1: General Information (Treating Company Information)

Company Name: Aspen Pest Control, Inc.
Company Address: 301 NW Cole Terrace City Lake City State FL Zip 32055
Company Business License No. JB109476 Company Phone No. 386-755-3611
FHA/VA Case No. (if any)

Section 2: Builder Information

Company Name: Erkinger Home Builders Company Phone No.

Section 3: Property Information

Location of Structure(s) Treated (Street Address or Legal Description, City, State and Zip) 563 Heatherside Drive Lake City FL

Type of Construction (More than one box may be checked) ☒ Slab ☐ Basement ☐ Crawl ☐ Other
Approximate Depth of Footing: Outside 0 Inside 0 Type of Fill 0

Section 4: Treatment Information

Date(s) of Treatment(s) 7-15-06
Brand Name of Product(s) Used Bora-Care
EPA Registration No. 64405-1
Approximate Final Mix Solution % .73 %
Approximate Size of Treatment Area: Sq. ft. 2463 Linear ft. 0 Linear ft. of Masonry Voids 0
Approximate Total Gallons of Solution Applied 3
Was treatment completed on exterior? ☒ Yes ☒ No
Service Agreement Available? ☒ Yes ☐ No
Note: Some state laws require service agreements to be issued. This form does not preempt state law.

Attachments (List)

Comments

Name of Applicator(s) Steve Brennan Certification No. (if required by State law) JF104376

The applicator has used a product in accordance with the product label and state requirements. All treatment materials and methods used comply with state and federal regulations.

Authorized Signature [signature] Date 7-15-06

Warning: HUD will prosecute false claims and statements. Conviction may result in criminal and/or civil penalties. (18 U.S.C. 1001, 1010. 1012; 31 U.S.C. 3729, 3802)

Form **NPCA-99-B** may still be used

form **HUD-NPCA-99-B** (04/2003)

CERTIFICATE OF

OCCUPANCY

COLUMBIA COUNTY, FLORIDA

Department of Building and Zoning Inspection

This Certificate of Occupancy is issued to the below named permit holder for the building and premises at the below named location, and certifies that the work has been completed in accordance with the Columbia County Building Code.

Parcel Number 33-3S-16-02438-116 **Building permit No.** 000023831

Use Classification SFD,UTILITY **Fire:** 17.76

Permit Holder MATTHEW ERKINGER **Waste:** 36.75

Owner of Building MATTHEW ERKINGER **Total:** 54.51

Location: 563 SW HEATHRIDGE DR(EMERALD COVE,LOT 16)

Date: 07/07/2006

Harry Dicks

Building Inspector

POST IN A CONSPICUOUS PLACE
(Business Places Only)

[redacted]

[redacted]

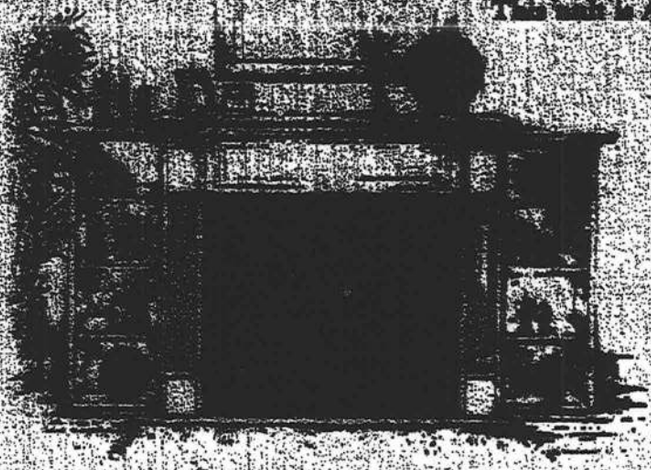

VF-4000

- [redacted] Btu/hr with manual control valve
- 19,500 – 25,000 Btu/hr with millivolt control valve
- Fully assembled and ready to install
- Attractive wood surround available
- 15" x 30" fixed or openable screen opening

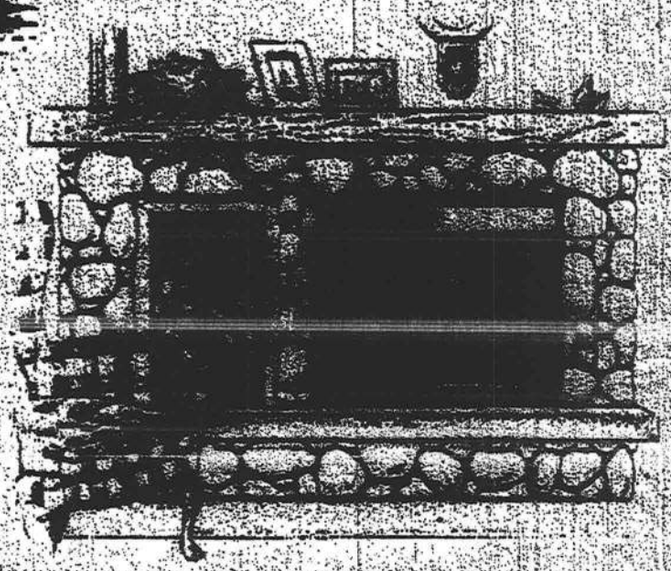

VF-5000

- 25,000 Btu/hr millivolt variable heat output
- 15" X 30" glass or screen viewing area
- Clean burning, safe and easy to install
- Realistic charred oak logs with glowing embers

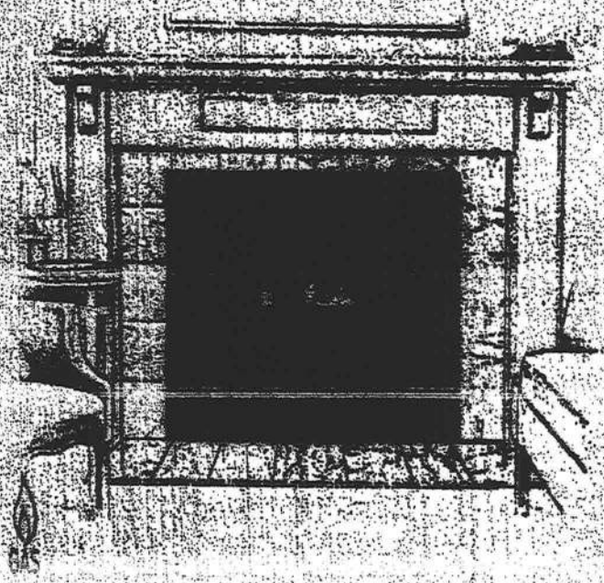

VF-6000

- 52,000 Btu/hr millivolt variable heat output
- Beautiful 20" X 34" glass or screen viewing area
- Will operate during a power failure
- Designed for large rooms

SUPERIOR

REV.	DATE	BY	DESCRIPTION
A-A	11-12-99	[illegible]	[illegible]

NOTES:

1. TESTED TO POSITIVE AND NEGATIVE 20 PSF DESIGN AND POSITIVE AND NEGATIVE 30 PSF TEST PRESSURE PER ASTM E-330.
2. MINIMUM SECTION HEIGHT 21".
3. SECTION HEIGHTS OF 24" AND 18" ARE AVAILABLE AND MAY BE USED IN ANY COMBINATION TO ACHIEVE VARIOUS DOOR HEIGHTS.
4. WINDOWS MAY BE INSTALLED IN THE TOP SECTION ONLY WITH 1/4" THICK GLASS OR COMPARABLE OR IN THE SECTION IMMEDIATELY BELOW THE TOP SECTION.
5. MINIMUM LENGTH OF ROLLER STICK IS 19" (2" AS TESTED).
6. THE STRUT PLACEMENT IN DOOR MUST BE CONSISTENT WITH THE DOOR TYPE.
7. STRUTS REQUIRED AT ALL LOCATIONS WITH TOP SCREWS.
8. QUANTITY OF SAME LOOKS ONLY IN ALL OR IN ALL BOTTOM.
9. DROP IN TYPE OF INSULATION IS OPTIONAL.

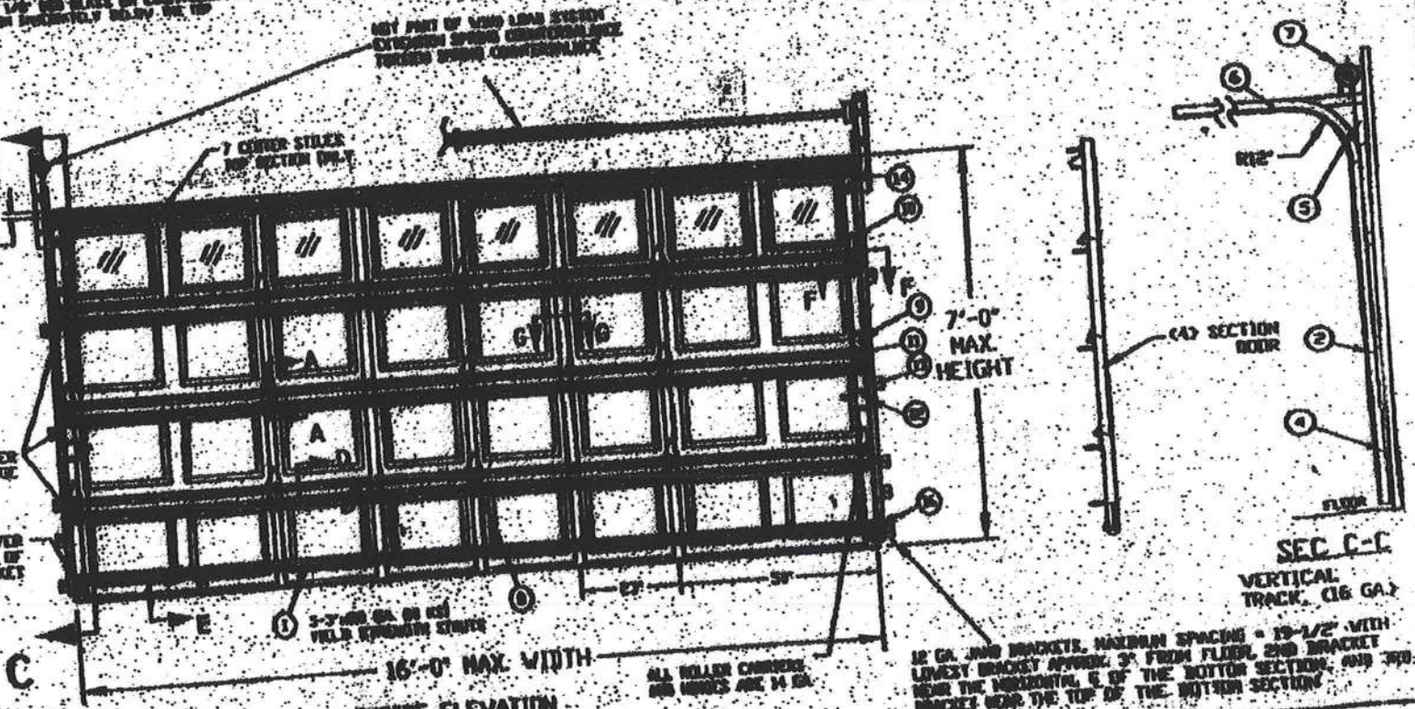

SEC C-C
VERTICAL TRACK, (16 GA.)

DESIGN LOAD +20.0 PSF & -20.0 PSF
TEST LOAD +30.0 PSF & -30.0 PSF

TEST REPORTS ON FILE VIDEO 10/10/00 [illegible]

REPORT NO. 2202

CARGO DOOR					
SERIES 2400, EXTERIOR STEEL =.042 MIN GAG. TESTED					
SERIES 2400, EXTERIOR STEEL =.049" MIN.					
SERIES 2500, EXTERIOR STEEL =.064" MIN.					
CHECKED WITH SERIES					
MAXIMUM WIDTH	MAXIMUM DOOR HEIGHT	TYPICAL STILE WIDTH	STRUT 60 KSI SIZE	STRUT 60 KSI QTY.	VERTICAL TRACK
16'	7'	23"	3"	5	2 IN.

GENERAL AMERICAN DOOR COMPANY
3000 BASELINE ROAD
MONTGOMERY, IL 60538

DATE 10-28-99	DRAWN BY	DRAWING NO. & REVISION (A) 11-12-99
16' X 7' NOM. RAISED PANEL STEEL DOOR -WINDLOAD ±20 PSF		
PAGE 1 OF 2		W13220-1

SEC A-A
SEC E-E
SEC F-F
FASTENER PROGRAM ELEMENT
SEAL
PE No. 0040010

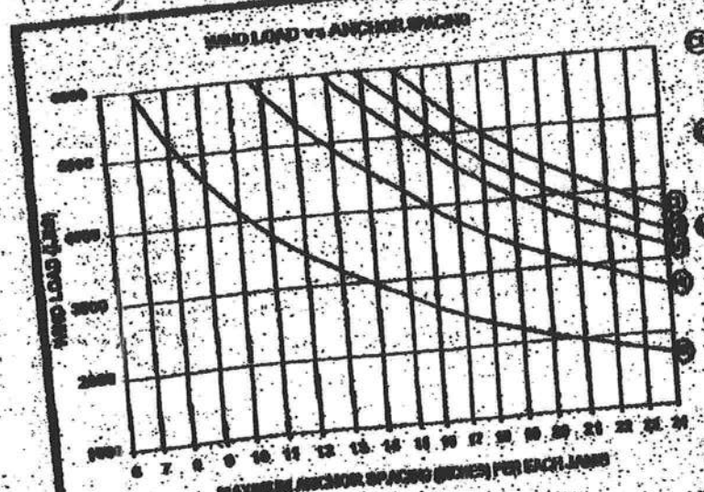

DESIGN LOAD (LBS) / FT² X GARAGE DOOR AREA(WIDTH-FT X HEIGHT-FT) = WIND LOAD(LBS)

EXAMPLE

30 LBS / FT² X 16 FT WIDE X 8 FT HIGH = 3840 LBS

- ① USE 22" SPACING
- ② USE 21" SPACING
- ③ USE 19" SPACING
- ④ USE 16" SPACING
- ⑤ USE 14" SPACING

USE RULE 11 FOR ADDITIONAL REQUIRED 2X6 VOID JAMB ANCHORS

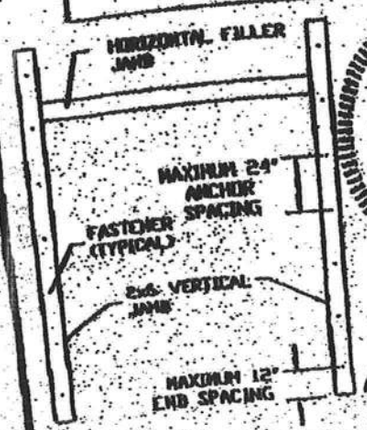

2x6 JAMB TO SUPPORTING STRUCTURE ATTACHMENT

2x6 PRESSURE TREATED (GRADE #2 OR BETTER SOUTHERN PINE) VOID JAMB SHALL BE ANCHORED TO BUILDING WOOD FRAME, GROUTED AND REINFORCED CONCRETE MASONRY UNIT (CMU) WALLS OR COLUMNS, OR REINFORCED CONCRETE COLUMNS.

NOTES:

1) ALL DOOR OPENING SURROUNDING STRUCTURE TO BE DESIGNED BY REGISTERED ENGINEER OR ARCHITECT WITH DUE CONSIDERATION GIVEN TO INSTALLATION WIND CENTER "HURRICANE" PARTS.

2) ALL DOOR OPENING STRUCTURE AND FASTENERS TO COMPLY WITH ALL APPLICABLE CODES INCLUDING SUCH "STANDARD FOR HURRICANE RESISTANT RESIDENTIAL CONSTRUCTION" ASTD 10.: CURRENT EDITION.

3) ALL FASTENERS TO BE INSTALLED IN STRICT ACCORDANCE WITH MANUFACTURER'S WORK INSTRUCTIONS, INSTRUCTIONS AND RECOMMENDATIONS.

4) WOOD FRAME BUILDING STUDS AT EACH SIDE OF DOOR OPENING SHALL BE PRIMARY STRUCTURAL CONNECTED, ANCHORED AND SHALL CONSIST OF A MINIMUM OF THREE (3) LAMINATIONS OF 2X6 PRESSURE TREATED SOUTHERN PINE (2X6 GRADE #2 OR BETTER) WALL STUDS CONTINUOUS FROM FOOTING TO DOUBLE TOP PLATE.

5) ATTACHED OPEN CONCRETE 2X6 VOID JAMB SHALL BE ANCHORED TO REINFORCED CONCRETE MASONRY UNIT (CMU) WALLS OR COLUMNS, OR REINFORCED CONCRETE COLUMNS. ANCHOR SPACING AND EMBEDMENT IS BASED ON CONCRETE MASONRY UNITS COMPLYING WITH ASTM C90 WITH A MINIMUM NET AREA COMPRESSIVE STRENGTH OF 2000 PSI, GROUT WITH A MINIMUM COMPRESSIVE STRENGTH OF 2000 PSI, REINFORCED CONCRETE COLUMNS WITH A MINIMUM COMPRESSIVE STRENGTH OF 2500 PSI.

6) EMBEDMENTS LISTED ARE THE MINIMUM ALLOWABLE EMBEDMENTS.

7) ANCHORS FOR CONCRETE AND CONCRETE MASONRY UNITS (CMU) SHALL HAVE A MINIMUM 3" EDGE DISTANCE FROM ALL EDGES OF CONCRETE OR CONCRETE MASONRY UNITS. ANCHORS FOR CONCRETE AND CMU SHALL HAVE A MINIMUM SPACING OF 3-3/4".

8) LAG SCREWS SHALL BE CENTERED IN ONE OF THE 1-1/2" DIMENSION FACES OF THE TRIPLE 2X6 WALL STUDS.

9) WASHERS ARE REQUIRED ON ALL FASTENERS.

10) THE WIND LOAD VS. ANCHOR SPACING CHART IS FOR A MAXIMUM DOOR SIZE OF 16' W X 8' H AT A MAXIMUM 40 PSF DESIGN WIND LOAD.

11) FOR THE UPPER THREE SURVIVING STEEL JAMB BRACKETS, BRACKETS SHALL BE CENTERED BETWEEN THE TWO CLOSEST 2X6 VOID JAMB ANCHORS. IF THE STEEL JAMB BRACKET IS NOT CENTERED BETWEEN THE TWO CLOSEST 2X6 VOID JAMB ANCHORS, ADD AN ADDITIONAL 2X6 VOID JAMB ANCHOR NEAR THAT STEEL BRACKET TO ENSURE THAT THE LOAD FROM THE STEEL BRACKET IS EQUALLY TRANSFERRED TO TWO VOID JAMB ANCHORS.

SEAL
PE No. 024390
STATE OF FLORIDA
PROFESSIONAL ENGINEER

JASER R KEYVAN
NO. 53774
STATE OF FLORIDA
PROFESSIONAL ENGINEER

3/8/2002

CENTRAL AMERICAN DOOR COMPANY
MONTGOMERY, IL 60538

DATE: 3-28-02 | DRAWN BY: DV

JAMB TO STRUCTURE ATTACHMENT FOR WIND LOADED GARAGE DOORS

A1.0

ELK Premium Roofing

March 6, 2002

Subject: Elk Product Approval Information

All Prestique® and Capstone® products manufactured in Tuscaloosa, AL are certified under the Miami – Dade County Building Code Office (BCCO). These products also meet the requirements for the Florida Building Code since they are MD approved. The following test protocols must be passed by each of the products in order for MD product certification:
ASTM D3462
PA 100 (110 mph uplift and wind driven rain resistance)
PA 107 (Modified ASTM D3161 - 110 mph wind uplift resistance)

The nailing patterns that were used during the PA 100 and PA 107 wind test protocols for the Prestique and Capstone products are listed below. Also listed below are the Miami – Dade Notice of Acceptance Numbers (NOA).

Raised Profile, Prestique High Definition, Prestique 25, or Prestique 30 –
PA 100 = 4 nails
PA 107 = 5 nails
MD NOA# = 01-1226.04

Prestique I 35 or Prestique I* –
PA 100 = 4 nails
PA 107 = 5 nails
MD NOA# = 01-1226.05

Prestique Plus or Prestique Gallery Collection* –
PA 100 = 4 nails
PA 107 = 4 nails
MD NOA# = 01-1226.03

Capstone*
PA 100 = 4 Nails
PA 107 = 4 Nails
MD NOA# = 01-0523.01
* As per the Elk Limited Warranty, six nails are required for the Elk high wind warranty.

If there are any questions please contact:

Mike Reed – Technical Manager (205) 342-0287 or Daniel DeJarnette – QA Engineer (205) 342-0298

PRESTIQUE®
HIGH DEFINITION®

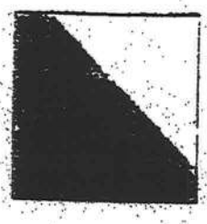

RAISED PROFILE™

High Definition

Product size	13½"x 39½"
Exposure	5½"
Pieces/Bundle	16
Bundles/Square	4/88.5 sq.ft.
Squares/Pallet	11

30-year limited warranty period; non-prorated coverage for shingles and application labor for the initial 5 years, plus an option for transferability*; prorated coverage for application labor and shingles for balance of limited warranty period; 5-year limited wind warranty*.

Product size	13½"x 39½"
Exposure	5½"
Pieces/Bundle	16
Bundles/Square	4/88.5 sq.ft.
Squares/Pallet	14

40-year limited warranty period; non-prorated coverage for shingles and application labor for the initial 5 years, plus an option for transferability*; prorated coverage for application labor and shingles for balance of limited warranty period; 5-year limited wind warranty*.

High Definition

Product size	13½"x 39½"
Exposure	5½"
Pieces/Bundle	22
Bundles/Square	3/100 sq.ft.
Squares/Pallet	16

30-year limited warranty period; non-prorated coverage for shingles and application labor for the initial 5 years, plus an option for transferability*; prorated coverage for application labor and shingles for balance of limited warranty period; 5-year limited wind warranty*.

Product size	13½"x 39½"
Exposure	5½"
Pieces/Bundle	22
Bundles/Square	3/100 sq.ft.
Squares/Pallet	16

30-year limited warranty period; non-prorated coverage for shingles and application labor for the initial 5 years, plus an option for transferability*; prorated coverage for application labor and shingles for balance of limited warranty period; 5-year limited wind warranty*.

HIP AND RIDGE SHINGLES

Size: 12"x 12"
Exposure: 5½"
Pieces/Bundle: 45
Coverage: 4 Bundles = 100 linear feet

32 Bundles/Pallet
18 Pallets/Truck
576 Bundles/Truck
10 Pieces/Bundle
1 Bundle = 120.33 linear feet

Available Colors: Antique Slate, Weathered Wood, Shakewood, Sassafras, Hickory, Barkwood™, Forest Green, Weathered™, Birchwood™, Sandalwood, Dakota Collection: Golden Forest™, Weathered Sage™, Sierra Sunset™.

All Prestique, Raised Profile and Seal-A-Ridge roofing products contain Elk WindGuard® sealers. WindGuard activates with the sun's heat, bonding shingles into a wind and weather resistant cover that reduces blow-offs and leaks.

Check for availability with Stain-In StainGuard® treatment to resist the discoloration of roofing granules caused by the growth of certain types of algae. Not available in Sassafras.

All Prestique and Raised Profile shingles meet UL® Wind Resistant (UL 997) and Class "A" Fire Ratings (UL 790); and ASTM Specifications D 3018, Type-I; D 3161, Type-I; E 108 and the requirements of ASTM D 3462.

All Prestique and Raised Profile shingles meet the latest Metro Dade building code requirements.

*See actual limited warranty for conditions and limitations.
*Check for product availability.

SPECIFICATIONS

Same Week Installed Annually all labor, materials and equipment necessary to complete installation of (name) shingles specified herein. Color shall be (name of color). Hip and ridge type to be Elk Seal-A-Ridge with formula FLX.

All exposed metal surfaces (flashing, vents, etc.) to be painted with matching Elk roof accessory paint.

Preparation of Roof Deck: Roof deck to be dry, well-seasoned 1" x 6" (25.4mm x 152.4mm) boards; solidly-sheathed exposed decking 1 ply sheathing at least 1/2" (12.5mm) thick conforming to the specifications of the American Plywood Association. 3/16" (4.8mm) sanded plywood underlayment or underpaint. Most fire retardant plywood decks are NOT approved substrates for Elk shingles. Contact Elk Field Service for application specifications over other decks and slope slopes.

Minimum Underlayment for standard roof slopes, 4" per foot, (33.5mm/mm) or greater: apply non-perforated No. 15 or 30 asphalt-saturated felt for underlayment. For low slopes 2" per foot (16.8mm/mm) to a maximum of 4" per foot, (33.5mm/mm), use two plies of underlayment overlapped a minimum of 19". Fasteners shall be of sufficient length and holding power for securing material as required by the application instructions printed on shingle wrapper.

For areas where algae is a problem, shingles shall be treated with StainGuard treatment, as manufactured by Elk at Tuscaloosa plant. Hip and ridge type to be Seal-A-Ridge with formula FLX with StainGuard treatment.

Complete application instructions are published by Elk and printed on the back of every shingle bundle. All warranties are contingent upon the correct installation as shown on the instructions. These instructions are the minimum required to meet Elk application requirements. In some areas, building codes may require additional application techniques or methods beyond our instructions. In these cases, the local code must be followed. Under no circumstances will Elk accept application requirements less than those contained in its application instructions.

For specifications in CSI format, call 800.354.SPEC (7732) or e-mail specifications@elkcorp.com.

SOUTHEAST & ATLANTIC OFFICE:
800.945.5551

CORPORATE HEADQUARTERS:
800.354.7732

PLANT LOCATION:
800.945.5545

ELK
www.elkcorp.com

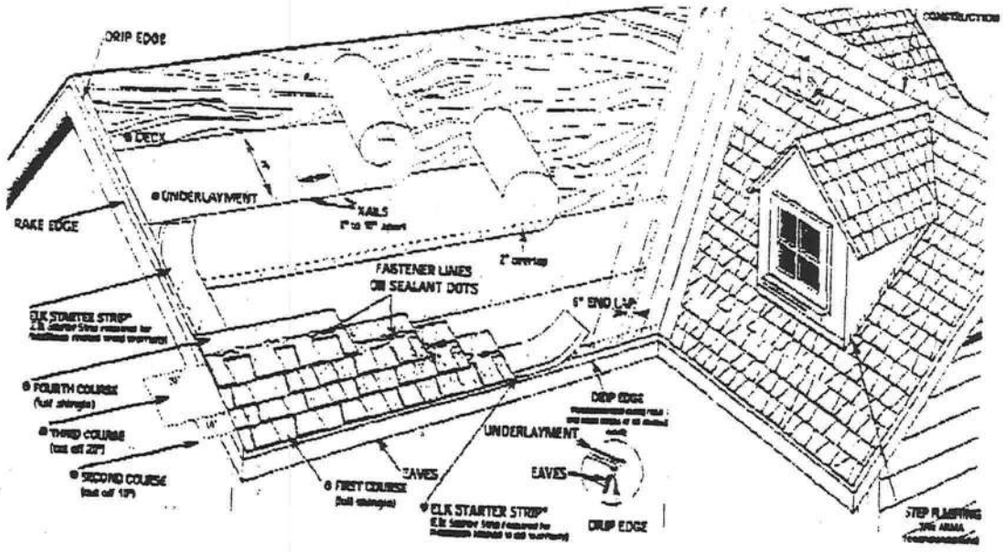

VALLEY CONSTRUCTION OPTION (Cutaway Open and Cutaway Closed are also acceptable) NOTE: For complete ARMA valley installation details, see ARMA Residential Asphalt Roofing Manual.

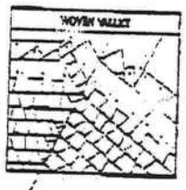

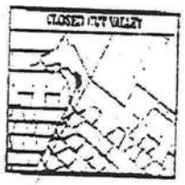

DIRECTIONS FOR APPLICATION

These application instructions are the minimum required to meet Elk's application requirements. Your failure to follow these instructions may void the product warranty in some areas. The building codes may require additional application techniques or materials beyond our instructions. In these cases, the local code must be followed. Under no circumstances will Elk accept application requirements that are less than those stated here. Shingles should not be jammed tightly together. All stacks should be properly ventilated. Note: It is not necessary to remove tabs on back of shingle.

DECK PREPARATION

Roof decks should be dry, well-seasoned 1" x 6" boards or solid or structural panels maximum 24" wide and conform to the specifications of the American Plywood Association or 1/8" chamfered sheathing, or 7/16" chipboard.

UNDERLAYMENT

Apply underlayment (Non-Perforated No. 15 or 30 asphalt saturated felt). Cover drip edge at eaves only.

For low slope 2/12 up to 4/12, completely cover the deck with two plies of underlayment overlapping a minimum of 19". Begin by fastening a 19" wide strip of underlayment parallel along the eaves. Place a full 36" wide sheet over the starter, horizontally placed along the eaves and centrally overlapping the starter strip.

EAVE FLASHING FOR ICE DAMS (ASK A ROOFING CONTRACTOR, REFER TO ARMA MANUAL OR CHECK LOCAL CODES)

For standard slope 4/12 to less than 21/12, use coated roll roofing or no less than 36 inches over the first underlayment overlaying from the eave edge to a point at least 24" beyond the inside wall of the living space below or one layer of a self-adhered eave and flashing membrane.

For low slope 2/12 up to 4/12, use a continuous layer of asphalt plastic cement between the two plies of underlayment from the eave edge up roof to a point at least 24" beyond the inside wall of the living space below or one layer of a self-adhered eave and flashing membrane.

Consult the Elk Field Service Department for application specifications over other decks and over slopes.

STARTER SHINGLE COURSE

USE AN ELK STARTER STRIP OR A STRIP SHINGLE INVERTED WITH THE HEADLAP APPLIED AT THE EAVE EDGE. With at least 4" trimmed from the end of the first shingle, start at the rake edge overhanging the eave 1/2" to 3/4". Fasten 2" from the lower outer and 1" from each side. Shingles may be applied with a course alignment of 46" on the roof.

FIRST COURSE

Start at rake and continue with full shingles and flush with the starter course.

SECOND COURSE

Start in the rake with the shingle having 10" trimmed off and continue across roof with full shingles.

THIRD COURSE

Start at the rake with the shingle having 20" trimmed off and continue across roof with full shingles.

FOURTH COURSE

Start at the rake and continue with full shingles across roof.

FIFTH AND SUCCEEDING COURSES.

Repeat application as shown for second, third, and fourth courses. Do not rack shingles straight up the roof.

VALLEY CONSTRUCTION

Open, woven and closed cut valleys are acceptable when applied by Asphalt Roofing Manufacturers Association (ARMA) recommended procedures. For metal valleys, use 18" wide vertical underlayment prior to applying 18" metal flashing beneath edge with nails. No nails are to be within 6" of valley centers.

RIDGE CONSTRUCTION

For ridge construction use Class "A" Seal-A-Ridge® with formula FLX™ (See ridge package for installation instructions.)

FASTENERS

While nailing is the preferred method for Elk shingles, Elk will accept fastening methods according to the following instructions.

Always nail or staple through the fastener line or on towards fastener lines, nail or staple between zone in Area with seamed data.

NAILS: Corrosive resistant, 3/8" head, minimum 12-gauge roofing nails. Elk recommends 1-1/4" for new roofs and 1-1/2" for roof-on-seamed overlaying, for new roofs only, 3/4" ring shank nails are required to be used from the eave edge up 6 feet up control over in case the customer has 1" ring shank nails allowed for re-roof.

STAPLES: Corrosive resistant, 16 gauge minimum, crown width minimum of 15/16". Note: An improperly adjusted stapler can cause in raised staples that can cause a non-sealed appearance and can prevent sealing.

Fasteners should be long enough to cause 3/4" deck penetration of penetration through deck, whichever is less.

MANSARD APPLICATIONS

Correct fastening is critical to the performance of the roof. For slopes exceeding 50° (or 21/12) use six fasteners per shingle. Locate fasteners in the fastener strip 1" from each side and space the remaining four fasteners evenly spaced along the length of the double fastener. Reinforced prior. Only fastening methods according to the above instructions are acceptable.

LIMITED WIND WARRANTY

- For a Limited Wind Warranty, all Prestique and Raised Profile shingles must be applied with 4 nailers placed fastener, or in the case of nailers applications, 6 nailers placed fastener per shingle.
- For a Limited Wind Warranty up to 110 MPH for Prestique Gallery Collection or Prestique Plus or 90 MPH for Prestique I, shingles must be applied with 6 nailers placed NAILS ONLY. SHINGLES APPLIED WITH STAPLES WILL NOT QUALIFY FOR THIS ENHANCED LIMITED WIND WARRANTY. Elk Starter Strip shingles must be applied at the eave and rake edges to qualify Prestique Plus, Prestique Gallery Collection and Prestique I shingles for the enhanced Limited Wind Warranty. Under no circumstances should the Elk Shingles or the Elk Starter Strip overhang the eaves or rake edge more than 3/4 of an inch.

HELP STOP BLOW-OFFS AND CALL-BACKS

A minimum of four fasteners must be driven into the DOUBLE THICKNESS (laminated area of the shingle). Nails or staples must be placed along – and through – the "fastener line" or on line with fastener lines, nail or staple between and in line with fastener lines. CAUTION: Do not use fastener line for shingle alignment.

Refer to local codes which in some areas may require specific application techniques beyond those Elk has specified.

All Prestique and Raised Profile shingles have a UL® Wind Resistance Rating when applied in accordance with these instructions using nails or staples on re-roofs as well as new construction.

CAUTION TO WHOLESALER: Coolness and humidity storage or handling can harm shingles shingles. Keep these shingles carefully covered, dry, moderately cool, and protected from the weather. Do not store near various sources of heat, do not store in direct sunlight until applied. DO NOT DOUBLE STACK. Systematically rotate all stock so that the material that has been stored the longest will be the first to be moved out.

ELK

www.elkcorp.com

Architectural Testing

AAMA/NWWDA 101/I.S.2-97 TEST REPORT

Rendered to

MI HOME PRODUCTS, INC.
650 West Market Street
P.O. Box 370
Gratz, Pennsylvania 17030-0370

Report No: 01-41134.01
Test Date: 03/07/02
Report Date: 03/26/02
Expiration Date: 03/07/06

Project Summary: Architectural Testing, Inc. (ATI) was contracted by MI Home Products, Inc. to perform tests on Series/Model 650 Fin, aluminum single hung window at their facility located in Elizabethville, Pennsylvania. The samples tested successfully met the performance requirements for a H-R40 52 x 72 rating.

Test Specification: The test specimen was evaluated in accordance with AAMA/NWWDA 101/I.S.2-97, *Voluntary Specifications for Aluminum, Vinyl (PVC) and Wood Windows and Glass Doors.*

Test Specimen Description:

Series/Model: 650 Fin

Type: Aluminum Single Hung Window

Overall Size: 4' 4-1/4" wide by 6' 0-3/8" high

Active Sash Size: 4' 1-3/4" wide by 3' 0-5/8" high

Daylight Opening Size: 3' 11-3/8" wide by 2' 9-1/2" high

Screen Size: 4' 0-1/4" wide by 2' 11-1/8" high

Finish: All aluminum was white.

Glazing Details: The active and fixed lites utilized 5/8" thick, sealed insulating glass constructed from two sheets of 1/8" thick, clear annealed glass and a metal reinforced butyl spacer system. The active sash was channel glazed utilizing a flexible vinyl wrap around gasket. The fixed lite was interior glazed against double-sided adhesive foam tape and secured with PVC snap-in glazing beads.

130 Derry Court
York, PA 17402-9405
phone: 717.764.7700
fax: 717.764.4129
www.archtest.com

Allen N. Reeves
1 APRIL 2002

REEVES
CERTIFICATE
NO. 19354
STATE OF
FLORIDA
PROFESSIONAL ENGINEER

Test Specimen Description: (Continued)

Weatherstripping:

Description	Quantity	Location
0.230" high by 0.270" backed polypile with center fin	1 Row	Fixed meeting rail
0.250" high by 0.187" backed polypile with center fin	2 Rows	Active sash stiles
1/2" x 1/2" dust plug	4 Pieces	Active sash, top and bottom of stiles
1/4" foam-filled vinyl bulb seal	1 Row	Active sash, bottom rail

Frame Construction: The frame was constructed of extruded aluminum with coped, butted, and sealed corners fastened with two #8 x 1" screws through the head and sill into each jamb screw boss. End caps were utilized on the ends of the fixed meeting rail and secured with two 1-1/4" screws per cap. Meeting rail was secured to the frame utilizing two 1-1/4" screws.

Sash Construction: The sash was constructed of extruded aluminum with coped, butted, and sealed corners fastened with two #8 x 1-1/2" screws through the rails into each jamb screw boss.

Screen Construction: The screen was constructed from roll-formed aluminum with keyed corners. The fiberglass mesh was secured with a flexible spline.

Hardware:

Description	Quantity	Location
Metal cam lock with keeper		Midspan, active meeting rail with keeper adjacent on fixed meeting rail
Plastic tilt latch	2	Active sash, meeting rail ends
Metal tilt pin	2	Active sash, bottom rail ends
Balance assembly	2	One in each jamb
Screen plunger	2	4" from rail ends on top rail

ALLEN H. REEVES
CERTIFICATE
NO. 18[illegible]
STATE OF
FLORIDA
PROFESSIONAL ENGINEER

Allen H. Reeves
1 APRIL 2002

Test Specimen Description: (Continued)

Drainage: Sloped sill

Reinforcement: No reinforcement was utilized.

Installation: The test specimen was installed into a 2 x 8 #2 Spruce-Pine-Fir wood test buck with #8 x 1-5/8" drywall screws every 8" on center around the nail fin. Polyurethane was used as a sealant under the nail fin and around the exterior perimeter.

Test Results:

The results are tabulated as follows:

Paragraph	Title of Test - Test Method	Results	Allowed
2.2.1.6.1	Operating Force	11 lbs	30 lbs max
	Air Infiltration (ASTM E 283-91) @ 1.57 psf (25 mph)	0.13 cfm/ft^2	0.3 cfm/ft^2 max

Note #1: The tested specimen meets the performance levels specified in AAMA/NWWDA 101/I.S. 2-97 for air infiltration.

	Water Resistance (ASTM E 547-00) (with and without screen) WTP = 2.86 psf	No leakage	No leakage
2.1.4.1	Uniform Load Deflection (ASTM E 330-97) (Measurements reported were taken on the meeting rail) (Loads were held for 33 seconds)		
	@ 25.9 psf (positive)	0.42"*	0.26" max.
	@ 34.7 psf (negative)	0.43"*	0.26" max.

**Exceeds L/175 for deflection, but passes all other test requirements.*

2.1.4.2	Uniform Load Structural (ASTM E 330-97) (Measurements reported were taken on the meeting rail) (Loads were held for 10 seconds)		
	@ 38.9 psf (positive)	0.02"	0.18" max.
	@ 52.1 psf (negative)	0.02"	0.18" max.

Allen N. Reeves
1 APRIL 2002

ALLEN N. REEVES
CERTIFICATE
NO. 19377
STATE OF
FLORIDA
PROFESSIONAL ENGINEER

Test Specimen Description: (Continued)

Paragraph	Title of Test - Test Method	Results	Allowed
2.2.1.6.2	Deglazing Test (ASTM E 987)		
	In operating direction at 70 lbs		
	Meeting rail	0.12"/25%	0.50"/100%
	Bottom rail	0.12"/25%	0.50"/100%
	In remaining direction at 50 lbs		
	Left stile	0.06"/12%	0.50"/100%
	Right stile	0.06"/12%	0.50"/100%
	Forced Entry Resistance (ASTM F 588-97)		
	Type: A		
	Grade: 10		
	Lock Manipulation Test	No entry	No entry
	Tests A1 through A5	No entry	No entry
	Test A7	No entry	No entry
	Lock Manipulation Test	No entry	No entry
Optional Performance			
4.3	Water Resistance (ASTM E 547-00) (with and without screen) WTP = 6.00 psf	No leakage	No leakage
	Uniform Load Deflection (ASTM E 330-97) (Measurements reported were taken on the meeting rail) (Loads were held for 33 seconds)		
	@ 45.0 psf (positive)	0.47"*	0.26" max.
	@ 47.2 psf (negative)	0.46"*	0.26" max.

**Exceeds L/175 for deflection, but passes all other test requirements.*

	Uniform Load Structural (ASTM E 330-97) (Measurements reported were taken on the meeting rail) (Loads were held for 10 seconds)		
	@ 67.5 psf (positive)	0.05"	0.18" max.
	@ 70.8 psf (negative)	0.05"	0.18" max.

Allen N. Reeves
1 APRIL 2002

ALLEN N. REEVES
CERTIFICATE NO. 18334
STATE OF FLORIDA
PROFESSIONAL ENGINEER

Detailed drawings, representative samples of the test specimen, and a copy of this report will be retained by ATI for a period of four years. The above results were secured by using the designated test methods and they indicate compliance with the performance requirements of the above referenced specification. This report does not constitute certification of this product, which may only be granted by the certification program administrator.

For ARCHITECTURAL TESTING, INC:

Mark A. Hess
Technician

Allen N. Reeves, P.E.
Director - Engineering Services
1 APRIL 2002

MAH:nlb
01-41134.01

ALLEN N. REEVES
CERTIFICATE
NO. 13754
STATE OF
FLORIDA
PROFESSIONAL ENGINEER

OXXO

Opaque Inswing Unit

COP-WL-MA0105-02

FIBERGLASS DOORS

APPROVED ARRANGEMENT:

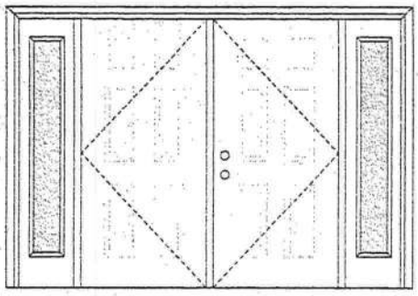

Warnock Hersey

Test Data Review Certificate #3026447A; #3026447B; #3026447C and COP/Test Report Validation Matrix #3026447A-001, 002, 003; #3026447B-001, 002, 003; #3026447C-001, 002, 003 provides additional information - available from the ITS/WH website (www.etlsemko.com), the Masonite website (www.masonite.com) or the Masonite technical center.

Note:
Units of other sizes are covered by this report as long as the panels used do not exceed 3'0" x 6'8".

Double Door with 2 Sidelites
Maximum unit size = 8'4" x 6'8"

Design Pressure

+55.0/-55.0
limited water unless special threshold design is used.

Large Missile Impact Resistance

Hurricane protective system (shutters) is REQUIRED

Actual design pressure and impact resistant requirements for a specific building design and geographic location is determined by ASCE 7-national, state or local building codes specify the edition required.

MINIMUM ASSEMBLY DETAIL:

Compliance requires that minimum assembly details have been followed – see MAD-WL-MA0005-02 or MAD-WL-MA0008-02 and MAD-WL-MA0041-02.

MINIMUM INSTALLATION DETAIL:

Compliance requires that minimum installation details have been followed – see MID-WL-MA0005-02.

APPROVED DOOR STYLES:

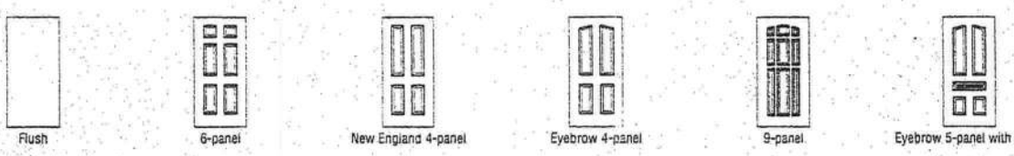

Flush | 6-panel | New England 4-panel | Eyebrow 4-panel | 9-panel | Eyebrow 5-panel with scroll

Oakcraft
Wood grain Textured
FIBERGLASS ENTRY DOORS

ARTEK™
Non-textured Fiberglass entry Doors

PREMDOR Collection
Premium Quality Doors

Exclusively from
Masonite®
Masonite International Corporation

June 17, 2002
Our continuing program of product improvement makes specifications, design and product detail subject to change without notice.

OXXO

Opaque Inswing Unit

COP-WL-MA0105-02

FIBERGLASS DOORS

APPROVED SIDELITE STYLES:

129 Series | 200 Series | 12R, 12L, 23R, 23L, 24R, 24L Series | 450 Series | 152 Series | 149 Series

CERTIFIED TEST REPORTS:

CTLA-772W-2

Certifying Engineer and License Number: Ramesh Patel, P.E./20224

Unit Tested in Accordance with Miami-Dade BCCO PA202.

Door panels constructed from 0.075" minimum thick fiberglass skins. Both stiles constructed of 1-5/8" laminated lumber. Top end rails constructed of 31/32" wood. Bottom end rails constructed of 31/32" wood composite. Interior cavity of slab filled with rigid polyurethane foam core.

Frame constructed of wood with an extruded aluminum threshold.

PRODUCT COMPLIANCE LABELING:

TESTED IN
ACCORDANCE WITH
MIAMI-DADE BCCO PA202

COMPANY NAME
CITY, STATE

To the best of my knowledge and ability the above side-hinged exterior door unit conforms to the requirements of the 2001 Florida Building Code, Chapter 17 (Structural Tests and Inspections).

Kurt L Balthazor

State of Florida, Professional Engineer
Kurt Balthazor, P.E. – License Number 56533

Warnock Hersey

Test Data Review Certificate #3026447A; #3026447B; #3026447C and COP/Test Report Validation Matrix #3026447A-001, 002, 003; #3026447B-001, 002, 003; #3026447C-001, 002, 003 provides additional information - available from the ITS/WH website (www.etlsemko.com), the Masonite website (www.masonite.com) or the Masonite technical center.

Oakcraft Wood Grain Textured FIBERGLASS ENTRY DOORS

ARTEK™ Non-Textured Fiberglass Entry Doors

PREMDOR Collection Premium Quality Doors

Exclusively from Masonite® Masonite International Corporation

June 17, 2002

X
Glazed Inswing Unit

COP-WL-JH4141-02

WOOD-EDGE STEEL DOORS

APPROVED ARRANGEMENT:

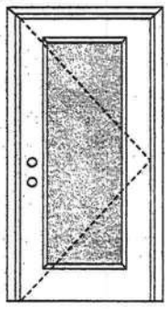

Note:
Units of other sizes are covered by this report as long as the panel used does not exceed 3'0" x 6'8".

Warnock Hersey

Test Data Review Certificate #3026447A and COP/Test Report Validation Matrix #3026447A-001 provides additional information - available from the ITS/WH website (www.etisemko.com), the Masonite website (www.masonite.com) or the Masonite technical center.

Single Door
Maximum unit size = 3'0" x 6'8"

Design Pressure
+40.5/-40.5
Limited water unless special threshold design is used.

Large Missile Impact Resistance
Hurricane protective system (shutters) is REQUIRED.

Actual design pressure and impact resistant requirements for a specific building design and geographic location is determined by ASCE 7-national, state or local building codes specify the edition required.

MINIMUM ASSEMBLY DETAIL:

Compliance requires that minimum assembly details have been followed – see MAD-WL-MA0001-02 and MAD-WL-MA0041-02.

MINIMUM INSTALLATION DETAIL:

Compliance requires that minimum installation details have been followed – see MID-WL-MA0001-02.

APPROVED DOOR STYLES:

1/4 GLASS:

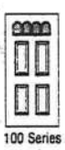
100 Series

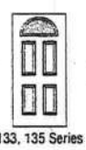
133, 135 Series


136 Series

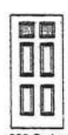
680 Series


822 Series

1/2 GLASS:

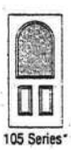
105 Series*

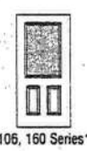
106, 160 Series*

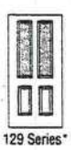
129 Series*


200 Series*

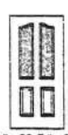
12 R/L, 23 R/L, 24 R/L Series*


107 Series*


108 Series


304 Series

*This glass kit may also be used in the following door styles: 5-panel; 5-panel with scroll; Eyebrow 5-panel; Eyebrow 5-panel with scroll.

Johnson™ EntrySystems

June 17, 2002
Our continuing program of product improvement makes specifications, design and product detail subject to change without notice.

PREMDOR Collection Premium Quality Doors

Exclusively from Masonite®
Masonite International Corporation

X
Glazed Inswing Unit

COP-WL-JH4141-02

WOOD-EDGE STEEL DOORS

APPROVED DOOR STYLES:

3/4 GLASS:

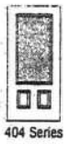
404 Series


410 Series

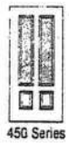
450 Series

FULL GLASS:


109 Series


114, 120, 122 Series


152 Series

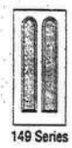
149 Series


300 Series

CERTIFIED TEST REPORTS:

NCTL 210-1897-7, 8, 9, 10, 11, 12; NCTL 210-1861-4, 5, 6, 10, 11, 12; NCTL 210-2185-1, 2, 3

Certifying Engineer and License Number: Barry D. Portney, P.E. / 16258.

Unit Tested in Accordance with Miami-Dade BCCO PA202.

Evaluation report NCTL-210-2794-1

Door panels constructed from 26-gauge 0.017" thick steel skins. Both stiles constructed from wood. Top end rails constructed of 0.041" steel. Bottom end rails constructed of 0.021" steel. Interior cavity of slab filled with rigid polyurethane foam core. Slab glazed with insulated glass mounted in a rigid plastic lip lite surround.

Frame constructed of wood with an extruded aluminum threshold.

PRODUCT COMPLIANCE LABELING:

TESTED IN
ACCORDANCE WITH
MIAMI-DADE BCCO PA202

COMPANY NAME
CITY, STATE

To the best of my knowledge and ability the above side-hinged exterior door unit conforms to the requirements of the 2001 Florida Building Code, Chapter 17 (Structural Tests and Inspections).

Kurt L Balthazor

State of Florida, Professional Engineer
Kurt Balthazor, P.E. – License Number 56533

Warnock Hersey

Test Data Review Certificate #3026447A and COP/Test Report Validation Matrix #3026447A-001 provides additional information - available from the ITS/WH website (www.etlsemko.com), the Masonite website (www.masonite.com) or the Masonite technical center.

Johnson™ EntrySystems

June 17, 2002
Our continuing program of product improvement makes specifications, design and product detail subject to change without notice.

PREMDOR Collection Premium Quality Doors

Exclusively from Masonite®
Masonite International Corporation

Residential System Sizing Calculation

Summary

Erkinger Homes

Lake City, Fl

Project Title:
Lt 16 Phase 1 Emerald Cove

Code Only
Professional Version
Climate: North

9/26/2005

Location for weather data: Jacksonville - User customized: Latitude(30) Temp Range(M)
Humidity data: Interior RH (50%) Outdoor wet bulb (78F) Humidity difference(49gr.)

Winter design temperature	32	F	Summer design temperature	99	F
Winter setpoint	70	F	Summer setpoint	75	F
Winter temperature difference	38	F	Summer temperature difference	24	F
Total heating load calculation	**34165**	**Btuh**	**Total cooling load calculation**	**32789**	**Btuh**
Submitted heating capacity	% of calc	Btuh	Submitted cooling capacity	% of calc	Btuh
Total (Electric Heat Pump)	122.9	42000	Sensible (SHR = 1)	175.0	42000
Heat Pump + Auxiliary(0.0kW)	122.9	42000	Latent	0.0	0
			Total (Electric Heat Pump)	128.1	42000

WINTER CALCULATIONS

Winter Heating Load (for 2093 sqft)

Load component			Load	
Window total	307	sqft	8473	Btuh
Wall total	1588	sqft	5151	Btuh
Door total	21	sqft	193	Btuh
Ceiling total	2093	sqft	2721	Btuh
Floor total	194	ft	5975	Btuh
Infiltration	240	cfm	10024	Btuh
Subtotal			**32538**	**Btuh**
Duct loss			1627	Btuh
TOTAL HEAT LOSS			**34165**	**Btuh**

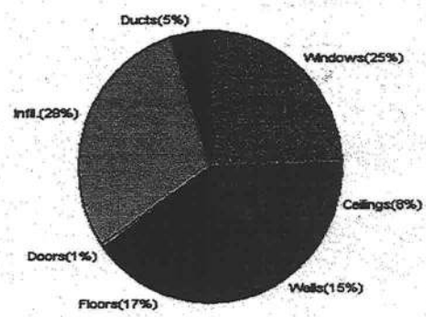

SUMMER CALCULATIONS

Summer Cooling Load (for 2093 sqft)

Load component			Load	
Window total	307	sqft	5529	Btuh
Wall total	1588	sqft	3846	Btuh
Door total	21	sqft	268	Btuh
Ceiling total	2093	sqft	3307	Btuh
Floor total			0	Btuh
Infiltration	222	cfm	5870	Btuh
Internal gain			3000	Btuh
Subtotal(sensible)			**21819**	**Btuh**
Duct gain			2182	Btuh
Total sensible gain			**24001**	**Btuh**
Latent gain(infiltration)			7408	Btuh
Latent gain(internal)			1380	Btuh
Total latent gain			**8788**	**Btuh**
TOTAL HEAT GAIN			**32789**	**Btuh**

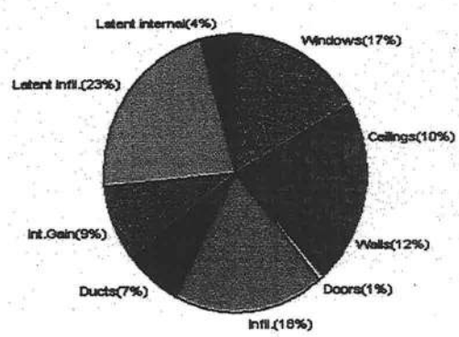

EnergyGauge® System Sizing based on ACCA Manual J.
PREPARED BY: Rick Clegget
DATE: 9-26-05

EnergyGauge® FLRCPB v3.4

System Sizing Calculations - Winter

Residential Load - Component Details

Erkinger Homes
Lake City, Fl

Project Title:
Lt 16 Phase 1 Emerald Cove

Code Only
Professional Version
Climate: North

Reference City: Jacksonville (User customized) Winter Temperature Difference: 38.0 F 9/26/2005

Window	Panes/SHGC/Frame/U	Orientation	Area X	HTM=	Load
1	2, Clear, Metal, DEF	N	99.0	27.6	2732 Btuh
2	2, Clear, Metal, DEF	E	6.0	27.6	166 Btuh
3	2, Clear, Metal, DEF	S	198.0	27.6	5465 Btuh
4	2, Clear, Metal, DEF	W	4.0	27.6	110 Btuh
	Window Total		307		8473 Btuh
Walls	Type	R-Value	Area X	HTM=	Load
1	Frame - Exterior	11.0	1433	3.4	4872 Btuh
2	Frame - Adjacent	11.0	155	1.8	279 Btuh
	Wall Total		1588		5151 Btuh
Doors	Type		Area X	HTM=	Load
1	Wood - Adjac		21	9.2	193 Btuh
	Door Total		21		193Btuh
Ceilings	Type	R-Value	Area X	HTM=	Load
1	Under Attic	30.0	2093	1.3	2721 Btuh
	Ceiling Total		2093		2721Btuh
Floors	Type	R-Value	Size X	HTM=	Load
1	Slab-On-Grade Edge Insul	0	194.0 ft(p)	30.8	5975 Btuh
	Floor Total		194		5975 Btuh
Infiltration	Type	ACH X	Building Volume	CFM=	Load
	Natural	0.40	20930(sqft)	140	5844 Btuh
	Mechanical			100	4180 Btuh
	Infiltration Total			240	10024 Btuh

Totals for Heating	**Subtotal**	**32538 Btuh**
	Duct Loss(using duct multiplier of 0.05)	**1627 Btuh**
	Total Btuh Loss	**34165 Btuh**

Key: Window types (SHGC - Shading coefficient of glass as SHGC numerical value or as clear or tint)
(Frame types - metal, wood or insulated metal)
(U - Window U-Factor or 'DEF' for default)
(HTM - ManualJ Heat Transfer Multiplier)
Key: Floor size (perimeter(p) for slab-on-grade or area for all other floor types)

System Sizing Calculations - Summer

Residential Load - Component Details

Erkinger Homes
Lake City, Fl

Project Title:
Lt 16 Phase 1 Emerald Cove

Code Only
Professional Version
Climate: North

Reference City: Jacksonville (User customized) Summer Temperature Difference: 24.0 F 9/26/2005

Window	Type Panes/SHGC/U/InSh/ExSh	Ornt	Overhang Len	Hgt	Window Area(sqft) Gross	Shaded	Unshaded	HTM Shaded	Unshaded	Load
1	2, Clear, DEF, B, N	N	1.5	8	99.0	0.0	99.0	17	17	1683 Btuh
2	2, Clear, DEF, B, N	E	1.5	8	6.0	0.0	6.0	17	48	288 Btuh
3	2, Clear, DEF, B, N	S	1.5	8	198.0	198.0	0.0	17	26	3366 Btuh
4	2, Clear, DEF, B, N	W	1.5	8	4.0	0.0	4.0	17	48	192 Btuh
	Window Total				307					5529 Btuh

Walls	Type	R-Value	Area	HTM	Load
1	Frame - Exterior	11.0	1433.0	2.5	3582 Btuh
2	Frame - Adjacent	11.0	155.0	1.7	264 Btuh
	Wall Total		1588.0		3846 Btuh

Doors	Type	Area	HTM	Load
1	Wood - Adjac	21.0	12.7	268 Btuh
	Door Total	21.0		268 Btuh

Ceilings	Type/Color	R-Value	Area	HTM	Load
1	Under Attic/Dark	30.0	2093.0	1.6	3307 Btuh
	Ceiling Total		2093.0		3307 Btuh

Floors	Type	R-Value	Size	HTM	Load
1	Slab-On-Grade Edge Insulation	0.0	194.0 ft(p)	0.0	0 Btuh
	Floor Total		194.0		0 Btuh

Infiltration	Type	ACH	Volume	CFM=	Load
	Natural	0.35	20930	122.3	3230 Btuh
	Mechanical			100	2640 Btuh
	Infiltration Total			222	5870 Btuh

Internal gain	Occupants		Btuh/occupant		Appliance	Load
	6	X	300	+	1200	3000 Btuh

Totals for Cooling	**Subtotal**	**21819 Btuh**
	Duct gain(using duct multiplier of 0.10)	**2182 Btuh**
	Total sensible gain	**24001 Btuh**
	Latent infiltration gain (for 49 gr. humidity difference)	**7408 Btuh**
	Latent occupant gain (6 people @ 230 Btuh per person)	**1380 Btuh**
	Latent other gain	**0 Btuh**
	TOTAL GAIN	**32789 Btuh**

Key: Window types (SHGC - Shading coefficient of glass as SHGC numerical value or as clear or tint)
(U - Window U-Factor or 'DEF' for default)
(InSh - Interior shading device: none(N), Blinds/Daperies(B) or Roller Shades(R))
(ExSh - Exterior shading device: none(N) or numerical value)
(Ornt - compass orientation)

Emerald Cove Lot 16

COLUMBIA COUNTY BUILDING DEPARTMENT

RESIDENTIAL MINIMUM PLAN REQUIREMENTS AND CHECKLIST FOR FLORIDA BUILDING CODE 2001
ONE (1) AND TWO (2) FAMILY DWELLINGS

ALL REQUIREMENTS ARE SUBJECT TO CHANGE

EFFECTIVE MARCH 1, 2002

ALL BUILDING PLANS MUST INDICATE THE FOLLOWING ITEMS AND INDICATE COMPLIANCE WITH CHAPTER 1606 OF THE FLORIDA BUILDING CODE 2001 BY PROVIDING CALCULATIONS AND DETAILS THAT HAVE THE SEAL AND SIGNATURE OF A CERTIFIED ARCHITECT OR ENGINEER REGISTERED IN THE STATE OF FLORIDA, OR ALTERNATE METHODOLOGIES, APPROVED BY THE STATE OF FLORIDA BUILDING COMMISSION FOR ONE-AND-TWO FAMILY DWELLINGS. FOR DESIGN PURPOSES THE FOLLOWING BASIC WIND SPEED AS PER FIGURE 1606 SHALL BE USED.

WIND SPEED LINE SHALL BE DEFINED AS FOLLOWS: THE CENTERLINE OF INTERSTATE 75.

1. ALL BUILDINGS CONSTRUCTED EAST OF SAID LINE SHALL BE ------- 100 MPH
2. ALL BUILDINGS CONSTRUCTED WEST OF SAID LINE SHALL BE --------110 MPH
3. NO AREA IN COLUMBIA COUNTY IS IN A WIND BORNE DEBRIS REGION

APPLICANT – PLEASE CHECK ALL APPLICABLE BOXES BEFORE SUBMITTAL

GENERAL REQUIREMENTS: Two (2) complete sets of plans containing the following:

Applicant	Plans Examiner	
☐	☐	All drawings must be clear, concise and drawn to scale ("Optional " details that are not used shall be marked void or crossed off). Square footage of different areas shall be shown on plans.
☐	☐	Designers name and signature on document (FBC 104.2.1). If licensed architect or engineer, official seal shall be affixed.
☐	☐	**Site Plan including:** a) Dimensions of lot b) Dimensions of building set backs c) Location of all other buildings on lot, well and septic tank if applicable, and all utility easements. d) Provide a full legal description of property.
☐	☐	**Wind-load Engineering Summary, calculations and any details required** a) Plans or specifications must state compliance with FBC Section 1606 b) The following information must be shown as per section 1606.1.7 FBC a. Basic wind speed (MPH) b. Wind importance factor (I) and building category c. Wind exposure – if more than one wind exposure is used, the wind exposure and applicable wind direction shall be indicated d. The applicable internal pressure coefficient e. Components and Cladding. The design wind pressure in terms of psf (kN/m²), to be used for the design of exterior component and cladding materials not specifally designed by the registered design professional
☐	☐	**Elevations including:**
☐	☐	a) All sides
☐	☐	b) Roof pitch
☐	☐	c) Overhang dimensions and detail with attic ventilation
☐	☐	d) Location, size and height above roof of chimneys
☐	☐	e) Location and size of skylights
☐	☐	f) Building height
☐	☐	e) Number of stories

Floor Plan including:

a) Rooms labeled and dimensioned

b) Shear walls

c) Windows and doors (including garage doors) showing size, mfg., approval listing and attachment specs. (FBC 1707) and safety glazing where needed (egress windows in bedrooms to be shown)

d) Fireplaces (gas appliance) (vented or non-vented) or wood burning with hearth

e) Stairs with dimensions (width, tread and riser) and details of guardrails and handrails

f) Must show and identify accessibility requirements (accesssable bathroom)

Foundation Plan including:

a) Location of all load-bearing wall with required footings indicated as standard Or monolithic and dimensions and reinforcing

b) All posts and/or column footing including size and reinforcing

c) Any special support required by soil analysis such as piling

d) Location of any vertical steel

Roof System:

a) Truss package including:

1. Truss layout and truss details signed and sealed by Fl. Pro. Eng.
2. Roof assembly (FBC 104.2.1 Roofing system, materials, manufacturer, fastening requirements and product evaluation with wind resistance rating)

b) Conventional Framing Layout including:

1. Rafter size, species and spacing
2. Attachment to wall and uplift
3. Ridge beam sized and valley framing and support details
4. Roof assembly (FBC 104.2.1 Roofing systems, materials, manufacturer, fastening requirements and product evaluation with wind resistance rating)

Wall Sections including:

a) Masonry wall

1. All materials making up wall
2. Block size and mortar type with size and spacing of reinforcement
3. Lintel, tie-beam sizes and reinforcement
4. Gable ends with rake beams showing reinforcement or gable truss and wall bracing details
5. All required connectors with uplift rating and required number and size of fasteners for continuous tie from roof to foundation
6. Roof assembly shown here or on roof system detail (FBC 104.2.1 Roofing system, materials, manufacturer, fastening requirements and product evaluation with resistance rating)
7. Fire resistant construction (if required)
8. Fireproofing requirements
9. Shoe type of termite treatment (termiticide or alternative method)
10. Slab on grade
    a. Vapor retarder (6mil. Polyethylene with joints lapped 6 inches and sealed)
    b. Must show control joints, synthetic fiber reinforcement or Welded fire fabric reinforcement and supports
11. Indicate where pressure treated wood will be placed
12. Provide insulation R value for the following:
    a. Attic space
    b. Exterior wall cavity
    c. Crawl space (if applicable)

☐ ☑ b) Wood frame wall

1. All materials making up wall
2. Size and species of studs
3. Sheathing size, type and nailing schedule
4. Headers sized
5. Gable end showing balloon framing detail or gable truss and wall hinge bracing detail
6. All required fasteners for continuous tie from roof to foundation (truss anchors, straps, anchor bolts and washers)
7. Roof assembly shown here or on roof system detail (FBC104.2.1 Roofing system, materials, manufacturer, fastening requirements and product evaluation with wind resistance rating)
8. Fire resistant construction (if applicable)
9. Fireproofing requirements
10. Show type of termite treatment (termiticide or alternative method)
11. Slab on grade
    a. Vapor retarder (6Mil. Polyethylene with joints lapped 6 inches and sealed
    b. Must show control joints, synthetic fiber reinforcement or welded wire fabric reinforcement and supports
12. Indicate where pressure treated wood will be placed
13. Provide insulation R value for the following:
    a. Attic space
    b. Exterior wall cavity
    c. Crawl space (if applicable)

☐ ☐ c) Metal frame wall and roof (designed, signed and sealed by Florida Prof. Engineer or Architect)

Floor Framing System:

☑ ☐ a) Floor truss package including layout and details, signed and sealed by Florida Registered Professional Engineer

☑ ☐ b) Floor joist size and spacing

☑ ☐ c) Girder size and spacing

☑ ☐ d) Attachment of joist to girder

☑ ☐ e) Wind load requirements where applicable

Plumbing Fixture layout

Electrical layout including:

☑ ☐ a) Switches, outlets/receptacles, lighting and all required GFCI outlets identified

☑ ☐ b) Ceiling fans

☑ ☐ c) Smoke detectors

☑ ☐ d) Service panel and sub-panel size and location(s)

☑ ☐ e) Meter location with type of service entrance (overhead or underground)

☑ ☐ f) Appliances and HVAC equipment

HVAC information

☑ ☐ a) Manual J sizing equipment or equivalent computation

☑ ☐ b) Exhaust fans in bathroom

☑ ☐ **Energy Calculations** (dimensions shall match plans)

☐ ☐ **Gas System** Type (LP or Natural) Location and BTU demand of equipment

Disclosure Statement for Owner Builders

Notice Of Commencement

Private Potable Water

a) Size of pump motor

b) Size of pressure tank

c) Cycle stop valve if used

Mark Disosway, P.E.
POB 868, Lake City, FL 32056, Ph (386) 754-5419, Fax (386) 269-4871

November 3, 2005

Building Department

Re: Permit 0510-80, Erkinger Builders, Spec House, Lot #16, Phase I, Emerald Cove S/D, Columbia County, Florida

Dear Building Official:

Please accept this letter as addendum to the plans for the above referenced house to change all references to FBC 2001 to FBC 2004.

- The plan was drawn prior to the effective date for FBC 2004, 01 October 2005.
- Since the wind load requirements of FBC 2004 remain basically unchanged from FBC 2001 there are no structural changes required to this plan.

Mark Disosway
03NOV05

Mark Disosway, PE
Florida Registered Professional Engineer

Cc Erkinger Builders

Project Information for:	L130833		
Builder:	ERKINGER HOMES	Date:	9/21/2005
Lot:	LOT 16 EMERALD COVE	Start Number:	546
Subdivision:	N/A		
County or City:	COLUMBIA COUNTY		
Truss Page Count:	107		

Truss Design Load Information (UNO) Design Program: MiTek 5.2 / 6.2

Gravity		**Wind**		**Building Code:**	FBC2001
Roof (psf):	42	Wind Standard:	ASCE 7-98		
Floor (psf):	55	Wind Speed (mph):	110		

Note: See individual truss drawings for special loading conditions

Building Designer, responsible for Structural Engineering: (See attached)

ERKINGER,MATTHEW ANTHONY RR0067135

Address: 248 SE NASSAU STREET

LAKE CITY, FL 32025 Designer: 24

Truss Design Engineer: Thomas, E. Miller, P.E., 56877 - Byron K. Anderson, PE FL 60987

Company: Structural Engineering and Inspections, Inc. EB 9196

Address 16105 N. Florida Ave, Ste B, Lutz, FL 33549

Notes:

1. Truss Design Engineer is responsible for the individual trusses as components only.
2. Determination as to the suitability and use of these truss components for the structure is the responsibility of the Building Designer of Record, as defined in ANSI/TPI 1-1995 Section 2.2
3. The seal date shown on the individual truss component drawings must match the seal date on this index sheet.

#	Truss ID	Dwg. #	Seal Date	#	Truss ID	Dwg. #	Seal Date
1	CJ1	092105546	9/21/2005	41	T22	092105586	9/21/2005
2	CJ1V	092105547	9/21/2005	42	T23	092105587	9/21/2005
3	CJ3	092105548	9/21/2005	43	T24	092105588	9/21/2005
4	CJ3V	092105549	9/21/2005	44	T25	092105589	9/21/2005
5	CJ5	092105550	9/21/2005	45	T26	092105590	9/21/2005
6	EJ5	092105551	9/21/2005	46	T27	092105591	9/21/2005
7	EJ5V	092105552	9/21/2005	47	T28	092105592	9/21/2005
8	EJ5X	092105553	9/21/2005	48	T29	092105593	9/21/2005
9	EJ5Z	092105554	9/21/2005	49	T30	092105594	9/21/2005
10	EJ7	092105555	9/21/2005	50	T31	092105595	9/21/2005
11	EJ7A	092105556	9/21/2005	51	T32	092105596	9/21/2005
12	EJ7B	092105557	9/21/2005	52	T33	092105597	9/21/2005
13	EJ7C	092105558	9/21/2005	53	T33G	092105598	9/21/2005
14	HJ5	092105559	9/21/2005	54	T34	092105599	9/21/2005
15	HJ5V	092105560	9/21/2005	55	CJ1V	092105600	9/21/2005
16	HJ7	092105561	9/21/2005	56	CJ3	092105601	9/21/2005
17	T01	092105562	9/21/2005	57	CJ3V	092105602	9/21/2005
18	T01G	092105563	9/21/2005	58	CJ5	092105603	9/21/2005
19	T02	092105564	9/21/2005	59	EJ5	092105604	9/21/2005
20	T02G	092105565	9/21/2005	60	EJ5V	092105605	9/21/2005
21	T03	092105566	9/21/2005	61	EJ5X	092105606	9/21/2005
22	T04	092105567	9/21/2005	62	EJ5Z	092105607	9/21/2005
23	T04G	092105568	9/21/2005	63	EJ7	092105608	9/21/2005
24	T05	092105569	9/21/2005	64	EJ7A	092105609	9/21/2005
25	T06	092105570	9/21/2005	65	EJ7B	092105610	9/21/2005
26	T07	092105571	9/21/2005	66	EJ7C	092105611	9/21/2005
27	T08	092105572	9/21/2005	67	HJ5	092105612	9/21/2005
28	T09	092105573	9/21/2005	68	HJ5V	092105613	9/21/2005
29	T10	092105574	9/21/2005	69	HJ7	092105614	9/21/2005
30	T11	092105575	9/21/2005	70	T01	092105615	9/21/2005
31	T12	092105576	9/21/2005	71	T01G	092105616	9/21/2005
32	T13	092105577	9/21/2005	72	T02	092105617	9/21/2005
33	T14	092105578	9/21/2005	73	T02G	092105618	9/21/2005
34	T15	092105579	9/21/2005	74	T03	092105619	9/21/2005
35	T16	092105580	9/21/2005	75	T04	092105620	9/21/2005
36	T17	092105581	9/21/2005	76	T04G	092105621	9/21/2005
37	T18	092105582	9/21/2005	77	T05	092105622	9/21/2005
38	T19	092105583	9/21/2005	78	T06	092105623	9/21/2005
39	T20	092105584	9/21/2005	79	T07	092105624	9/21/2005
40	T21	092105585	9/21/2005	80	T08	092105625	9/21/2005

SEP 2 1 2005

Project Information for:	L130833		
Builder:	ERKINGER HOMES	Date:	9/21/2005
Lot:	LOT 16 EMERALD COVE	Start Number:	546
Subdivision:	N/A		
County or City:	COLUMBIA COUNTY		
Truss Page Count:	107		

Truss Design Load Information (UNO) Design Program: MiTek 5.2 / 6

Gravity		**Wind**		**Building Code:**	FBC2001
Roof (psf):	42	Wind Standard:	ASCE 7-98		
Floor (psf):	55	Wind Speed (mph):	110		

Note: See individual truss drawings for special loading conditions

Building Designer, responsible for Structural Engineering: (See attached)
ERKINGER,MATTHEW ANTHONY RR0067135
Address: 248 SE NASSAU STREET
LAKE CITY, FL 32025

Truss Design Engineer: Thomas, E. Miller, P.E., 56877 - Byron K. Anderson, PE FL 60987
Company: Structural Engineering and Inspections, Inc. EB 9196
Address 16105 N. Florida Ave, Ste B, Lutz, FL 33549

Notes:
1. Truss Design Engineer is responsible for the individual trusses as components only.
2. Determination as to the suitability and use of these truss components for the structure is the responsibility of the Building Designer of Record, as defined in ANSI/TPI 1-1995 Section 2.2
3. The seal date shown on the individual truss component drawings must match the seal date on this index sheet.

#	Truss ID	Dwg. #	Seal Date	#	Truss ID	Dwg. #	Seal Date
81	T09	92105626	9/21/2005				
82	T10	92105627	9/21/2005				
83	T11	92105628	9/21/2005				
84	T12	92105629	9/21/2005				
85	T13	92105630	9/21/2005				
86	T14	92105631	9/21/2005				
87	T15	92105632	9/21/2005				
88	T16	92105633	9/21/2005				
89	T17	92105634	9/21/2005				
90	T18	92105635	9/21/2005				
91	T19	92105636	9/21/2005				
92	T20	92105637	9/21/2005				
93	T21	92105638	9/21/2005				
94	T22	92105639	9/21/2005				
95	T23	92105640	9/21/2005				
96	T24	92105641	9/21/2005				
97	T25	92105642	9/21/2005				
98	T26	92105643	9/21/2005				
99	T27	92105644	9/21/2005				
100	T28	92105645	9/21/2005				
101	T29	92105646	9/21/2005				
102	T30	92105647	9/21/2005				
103	T31	92105648	9/21/2005				
104	T32	92105649	9/21/2005				
105	T33	92105650	9/21/2005				
106	T33G	92105651	9/21/2005				
107	T34	92105652	9/21/2005				

SEP 2 1 2005

Licensee Details

Licensee Information

Name:	**ERKINGER, MATTHEW ANTHONY** (Primary N **INDIVIDUAL** (DBA Name)
Main Address:	**248 SE NASSAU ST** **LAKE CITY Florida 32025**
County:	**COLUMBIA**
License Mailing:	
LicenseLocation:	

License Information

License Type:	**Registered Residential Contractor**
Rank:	**Reg Residential**
License Number:	**RR0067135**
Status:	**Current,Active**
Licensure Date:	**12/02/1997**
Expires:	**08/31/2007**
Special Qualifications	**Qualification Effective**
Bldg Code Core Course Credit	
No Qualified Business License Required	**02/20/2004**

View Related License Information

View License Complaint

Job	Truss	Truss Type	Qty	Ply	Dwg.#092105546
L130833	CJ1	MONO TRUSS	8	1	Job Reference (optional)

Builders FirstSource, Lake City, Fl 32055 — 6.200 s Jul 13 2005 MiTek Industries, Inc. Tue Sep 20 17:50:36 2005 Page 1

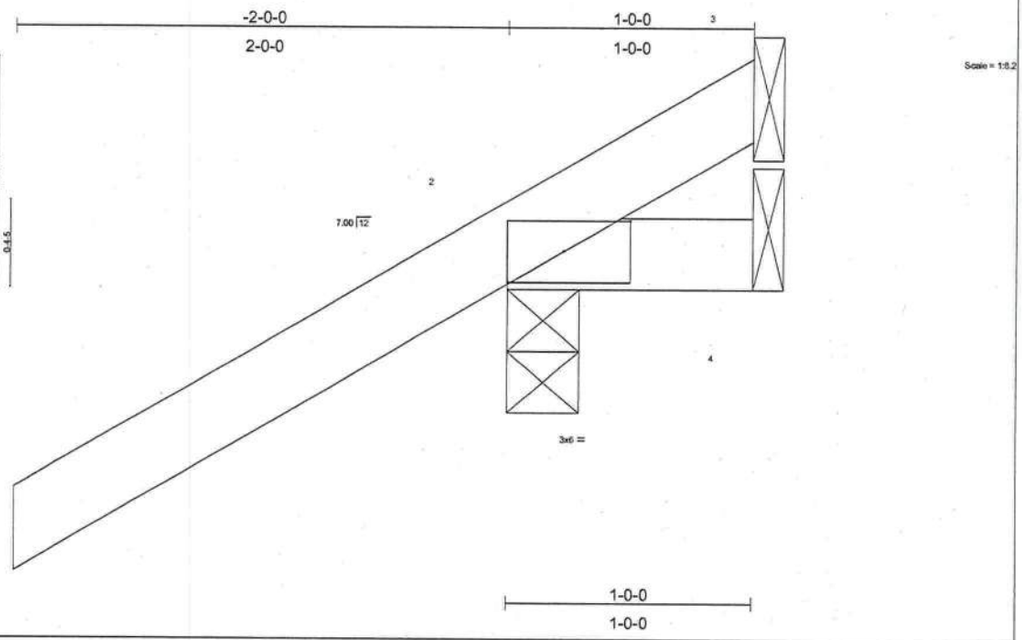

Plate Offsets (X,Y): [2:0-3-4,0-1-8]

LOADING (psf)		SPACING	2-0-0	CSI		DEFL	in	(loc)	l/defl	L/d	PLATES	GRIP
TCLL	20.0	Plates Increase	1.25	TC	0.24	Vert(LL)	-0.00	2	>999	240	MT20	244/190
TCDL	7.0	Lumber Increase	1.25	BC	0.01	Vert(TL)	-0.00	2	>999	180		
BCLL	10.0	Rep Stress Incr	YES	WB	0.00	Horz(TL)	0.00	3	n/a	n/a		
BCDL	5.0	Code FBC2001/TPI2002		(Matrix)							Weight: 7 lb	

LUMBER
TOP CHORD 2 X 4 SYP No.2D
BOT CHORD 2 X 4 SYP No.2D

BRACING
TOP CHORD Structural wood sheathing directly applied or 1-0-0 oc purlins.
BOT CHORD Rigid ceiling directly applied or 10-0-0 oc bracing.

REACTIONS (lb/size) 2=266/0-3-8, 4=14/Mechanical, 3=-90/Mechanical
Max Horz 2=101(load case 5)
Max Uplift2=-283(load case 5), 3=-90(load case 1)
Max Grav 2=266(load case 1), 4=14(load case 1), 3=136(load case 5)

FORCES (lb) - Maximum Compression/Maximum Tension
TOP CHORD 1-2=0/53, 2-3=-77/86
BOT CHORD 2-4=0/0

NOTES
1) Wind: ASCE 7-98; 110mph (3-second gust); h=20ft; TCDL=4.2psf; BCDL=3.0psf; Category II; Exp B; enclosed; MWFRS gable end zone and C-C Exterior(2) zone; Lumber DOL=1.60 plate grip DOL=1.60. This truss is designed for C-C for members and forces, and for MWFRS for reactions specified.
2) Refer to girder(s) for truss to truss connections.
3) Provide mechanical connection (by others) of truss to bearing plate capable of withstanding 283 lb uplift at joint 2 and 90 lb uplift at joint 3.

LOAD CASE(S) Standard

SEPTEMBER 21, 2005 TRUSS DESIGN ENGINEER:
THOMAS E. MILLER PE 56877, BYRON K. ANDERSON PE 60987
STRUCTURAL ENGINEERING AND INSPECTIONS, INC. EB 9196
16105 N. FLORIDA AVE. STE B, LUTZ, FL 33549

Job	Truss	Truss Type	Qty	Ply	Dwg.#092105547
L130833	CJ1V	MONO SCISSOR	2	1	Job Reference (optional)

Builders FirstSource, Lake City, Fl 32055

6.200 s Jul 13 2005 MiTek Industries, Inc. Tue Sep 20 17:50:39 2005 Page 1

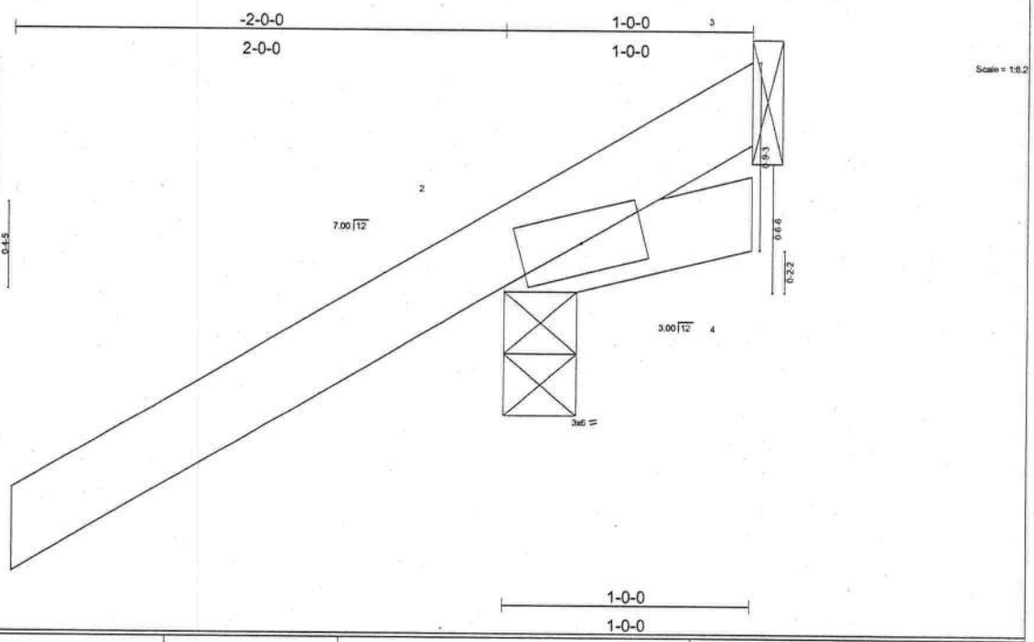

LOADING (psf)		SPACING 2-0-0		CSI		DEFL in (loc) l/defl L/d		PLATES GRIP
TCLL	20.0	Plates Increase	1.25	TC	0.23	Vert(LL) -0.01 4 >857 240		MT20 244/190
TCDL	7.0	Lumber Increase	1.25	BC	0.02	Vert(TL) -0.01 4 >947 180		
BCLL	10.0	Rep Stress Incr	YES	WB	0.00	Horz(TL) 0.00 3 n/a n/a		
BCDL	5.0	Code FBC2001/TPI2002		(Matrix)				Weight: 7 lb

LUMBER
TOP CHORD 2 X 4 SYP No.2D
BOT CHORD 2 X 4 SYP No.2D

BRACING
TOP CHORD Structural wood sheathing directly applied or 1-0-0 oc purlins.
BOT CHORD Rigid ceiling directly applied or 6-0-0 oc bracing.

REACTIONS (lb/size) 2=266/0-3-8, 3=-75/Mechanical
Max Horz 2=100(load case 5)
Max Uplift2=-277(load case 5), 3=-75(load case 1)
Max Grav 2=266(load case 1), 3=132(load case 5)

FORCES (lb) - Maximum Compression/Maximum Tension
TOP CHORD 1-2=0/51, 2-3=-74/89
BOT CHORD 2-4=-7/0

NOTES
1) Wind: ASCE 7-98; 110mph (3-second gust); h=20ft; TCDL=4.2psf; BCDL=3.0psf; Category II; Exp B; enclosed; MWFRS gable end zone and C-C Exterior(2) zone; Lumber DOL=1.60 plate grip DOL=1.60. This truss is designed for C-C for members and forces, and for MWFRS for reactions specified.
2) Refer to girder(s) for truss to truss connections.
3) Bearing at joint(s) 2 considers parallel to grain value using ANSI/TPI 1 angle to grain formula. Building designer should verify capacity of bearing surface.
4) Provide mechanical connection (by others) of truss to bearing plate capable of withstanding 277 lb uplift at joint 2 and 75 lb uplift at joint 3.

LOAD CASE(S) Standard

SEPTEMBER 21, 2005 TRUSS DESIGN ENGINEER:
THOMAS E. MILLER PE 56877, BYRON K. ANDERSON PE 60987
STRUCTURAL ENGINEERING AND INSPECTIONS, INC. EB 9196
16105 N. FLORIDA AVE. STE B, LUTZ, FL 33549

Job	Truss	Truss Type	Qty	Ply	Dwg.#092105548
L130833	CJ3	MONO TRUSS	8	1	Job Reference (optional)

Builders FirstSource, Lake City, Fl 32055 — 6.200 s Jul 13 2005 MiTek Industries, Inc. Tue Sep 20 17:50:40 2005 Page 1

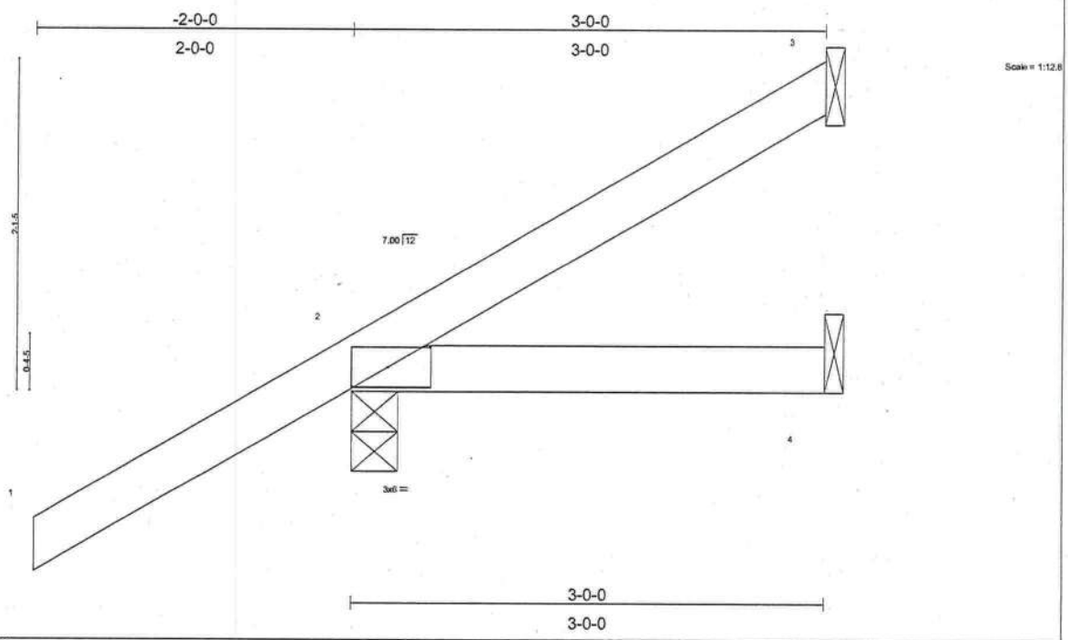

Plate Offsets (X,Y): [2:0-3-4,0-1-8]

LOADING (psf)		SPACING	2-0-0	CSI		DEFL	in	(loc)	l/defl	L/d	PLATES	GRIP
TCLL	20.0	Plates Increase	1.25	TC	0.25	Vert(LL)	-0.00	2-4	>999	240	MT20	244/190
TCDL	7.0	Lumber Increase	1.25	BC	0.05	Vert(TL)	-0.01	2-4	>999	180		
BCLL	10.0	Rep Stress Incr	YES	WB	0.00	Horz(TL)	-0.00	3	n/a	n/a		
BCDL	5.0	Code FBC2001/TPI2002		(Matrix)							Weight: 13 lb	

LUMBER
TOP CHORD 2 X 4 SYP No.2D
BOT CHORD 2 X 4 SYP No.2D

BRACING
TOP CHORD Structural wood sheathing directly applied or 3-0-0 oc purlins.
BOT CHORD Rigid ceiling directly applied or 10-0-0 oc bracing.

REACTIONS (lb/size) 3=31/Mechanical, 2=278/0-3-8, 4=42/Mechanical
Max Horz 2=154(load case 5)
Max Uplift3=-26(load case 4), 2=-200(load case 5)
Max Grav 3=31(load case 3), 2=278(load case 1), 4=42(load case 1)

FORCES (lb) - Maximum Compression/Maximum Tension
TOP CHORD 1-2=0/54, 2-3=-64/15
BOT CHORD 2-4=0/0

NOTES
1) Wind: ASCE 7-98; 110mph (3-second gust); h=20ft; TCDL=4.2psf; BCDL=3.0psf; Category II; Exp B; enclosed; MWFRS gable end zone and C-C Exterior(2) zone; Lumber DOL=1.60 plate grip DOL=1.60. This truss is designed for C-C for members and forces, and for MWFRS for reactions specified.
2) Refer to girder(s) for truss to truss connections.
3) Provide mechanical connection (by others) of truss to bearing plate capable of withstanding 26 lb uplift at joint 3 and 200 lb uplift at joint 2.

LOAD CASE(S) Standard

SEPTEMBER 21, 2005 TRUSS DESIGN ENGINEER:
THOMAS E. MILLER PE 56877, BYRON K. ANDERSON PE 60987
STRUCTURAL ENGINEERING AND INSPECTIONS, INC. EB 9196
16105 N. FLORIDA AVE. STE B, LUTZ, FL 33549

Job	Truss	Truss Type	Qty	Ply	Dwg.#092105549
L130833	CJ3V	MONO SCISSOR	2	1	Job Reference (optional)

Builders FirstSource, Lake City, Fl 32055

6.200 s Jul 13 2005 MiTek Industries, Inc. Tue Sep 20 17:50:40 2005 Page 1

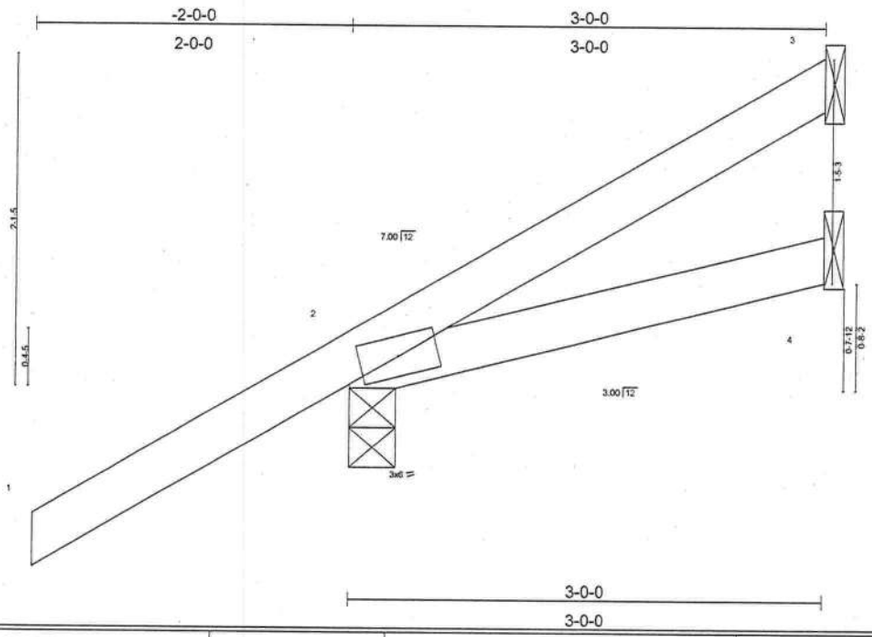

LOADING (psf)		SPACING	2-0-0	CSI		DEFL	in	(loc)	l/defl	L/d	PLATES	GRIP
TCLL	20.0	Plates Increase	1.25	TC	0.24	Vert(LL)	-0.00	2-4	>999	240	MT20	244/190
TCDL	7.0	Lumber Increase	1.25	BC	0.05	Vert(TL)	-0.01	2-4	>999	180		
BCLL	10.0	Rep Stress Incr	YES	WB	0.00	Horz(TL)	-0.00	3	n/a	n/a		
BCDL	5.0	Code FBC2001/TPI2002		(Matrix)							Weight: 14 lb	

LUMBER
TOP CHORD 2 X 4 SYP No.2D
BOT CHORD 2 X 4 SYP No.2D

BRACING
TOP CHORD Structural wood sheathing directly applied or 3-0-0 oc purlins.
BOT CHORD Rigid ceiling directly applied or 10-0-0 oc bracing.

REACTIONS (lb/size) 3=31/Mechanical, 2=278/0-3-8, 4=42/Mechanical
Max Horz 2=153(load case 5)
Max Uplift3=-27(load case 4), 2=-198(load case 5)
Max Grav 3=31(load case 3), 2=278(load case 1), 4=42(load case 1)

FORCES (lb) - Maximum Compression/Maximum Tension
TOP CHORD 1-2=0/52, 2-3=-65/15
BOT CHORD 2-4=-8/8

NOTES
1) Wind: ASCE 7-98; 110mph (3-second gust); h=20ft; TCDL=4.2psf; BCDL=3.0psf; Category II; Exp B; enclosed; MWFRS gable end zone and C-C Exterior(2) zone; Lumber DOL=1.60 plate grip DOL=1.60. This truss is designed for C-C for members and forces, and for MWFRS for reactions specified.
2) Refer to girder(s) for truss to truss connections.
3) Bearing at joint(s) 2 considers parallel to grain value using ANSI/TPI 1 angle to grain formula. Building designer should verify capacity of bearing surface.
4) Provide mechanical connection (by others) of truss to bearing plate capable of withstanding 27 lb uplift at joint 3 and 198 lb uplift at joint 2.

LOAD CASE(S) Standard

SEPTEMBER 21, 2005 TRUSS DESIGN ENGINEER:
THOMAS E. MILLER PE 56877, BYRON K. ANDERSON PE 60987
STRUCTURAL ENGINEERING AND INSPECTIONS, INC. EB 9196
16105 N. FLORIDA AVE. STE B, LUTZ, FL 33549

Job	Truss	Truss Type	Qty	Ply	Dwg.#092105550
L130833	CJ5	MONO TRUSS	4	1	Job Reference (optional)

Builders FirstSource, Lake City, Fl 32055

6.200 s Jul 13 2005 MiTek Industries, Inc. Tue Sep 20 17:50:41 2005 Page 1

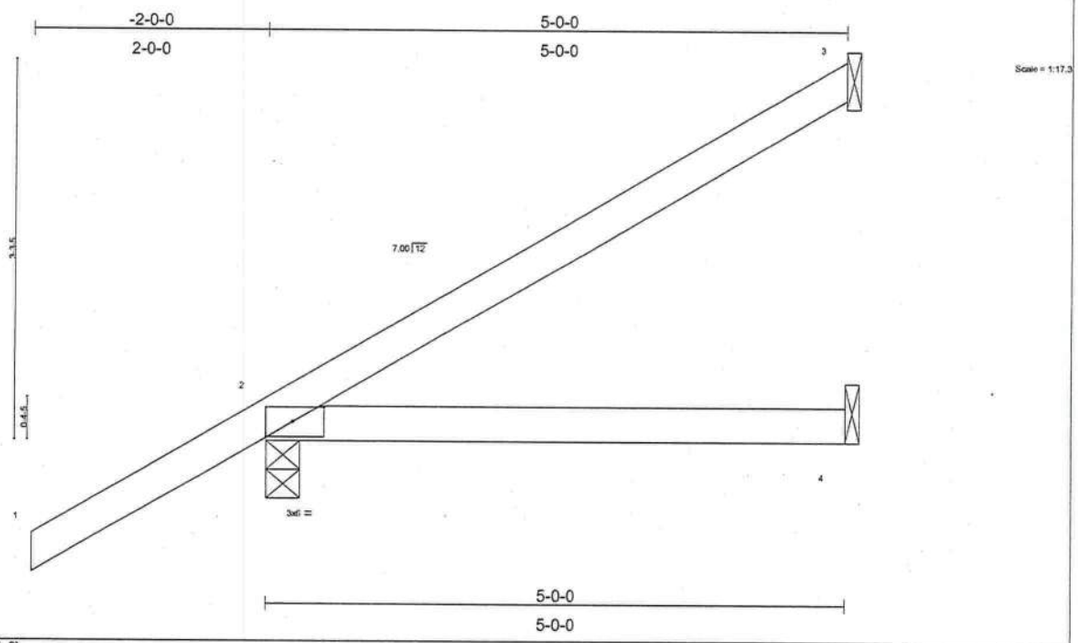

Plate Offsets (X,Y): [2:0-3-4,0-1-8]

LOADING (psf)		SPACING	2-0-0	CSI		DEFL	in	(loc)	l/defl	L/d	PLATES	GRIP
TCLL	20.0	Plates Increase	1.25	TC	0.25	Vert(LL)	-0.03	2-4	>999	240	MT20	244/190
TCDL	7.0	Lumber Increase	1.25	BC	0.14	Vert(TL)	-0.05	2-4	>999	180		
BCLL	10.0	Rep Stress Incr	YES	WB	0.00	Horz(TL)	-0.00	3	n/a	n/a		
BCDL	5.0	Code FBC2001/TPI2002		(Matrix)							Weight: 20 lb	

LUMBER
TOP CHORD 2 X 4 SYP No.2D
BOT CHORD 2 X 4 SYP No.2D

BRACING
TOP CHORD Structural wood sheathing directly applied or 5-0-0 oc purlins.
BOT CHORD Rigid ceiling directly applied or 10-0-0 oc bracing.

REACTIONS (lb/size) 3=103/Mechanical, 2=343/0-3-8, 4=72/Mechanical
Max Horz 2=207(load case 5)
Max Uplift3=-96(load case 5), 2=-191(load case 5)

FORCES (lb) - Maximum Compression/Maximum Tension
TOP CHORD 1-2=0/54, 2-3=-81/40
BOT CHORD 2-4=0/0

NOTES
1) Wind: ASCE 7-98; 110mph (3-second gust); h=20ft; TCDL=4.2psf; BCDL=3.0psf; Category II; Exp B; enclosed; MWFRS gable end zone and C-C Exterior(2) zone; Lumber DOL=1.60 plate grip DOL=1.60. This truss is designed for C-C for members and forces, and for MWFRS for reactions specified.
2) Refer to girder(s) for truss to truss connections.
3) Provide mechanical connection (by others) of truss to bearing plate capable of withstanding 96 lb uplift at joint 3 and 191 lb uplift at joint 2.

LOAD CASE(S) Standard

SEPTEMBER 21, 2005 TRUSS DESIGN ENGINEER:
THOMAS E. MILLER PE 56877, BYRON K. ANDERSON PE 60987
STRUCTURAL ENGINEERING AND INSPECTIONS, INC. EB 9196
16105 N. FLORIDA AVE. STE B, LUTZ, FL 33549

Job	Truss	Truss Type	Qty	Ply	Dwg.#092105551
L130833	EJ5	MONO TRUSS	6	1	Job Reference (optional)

Builders FirstSource, Lake City, Fl 32055

6.200 s Jul 13 2005 MiTek Industries, Inc. Tue Sep 20 17:50:41 2005 Page 1

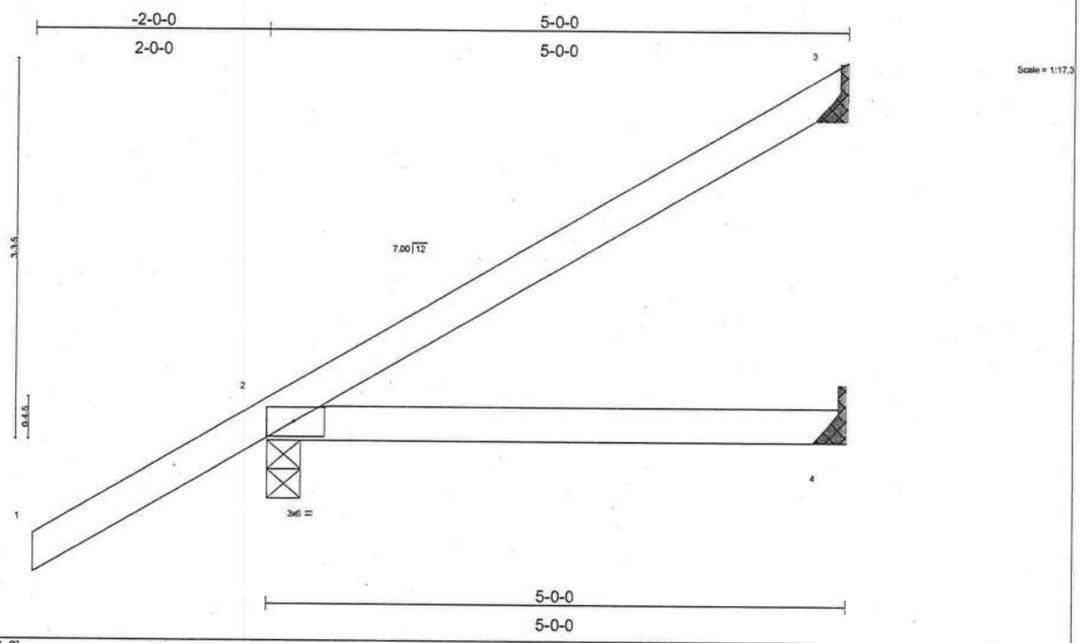

Plate Offsets (X,Y): [2:0-3-3,0-1-8]

LOADING (psf)		SPACING	2-0-0	CSI		DEFL	in	(loc)	l/defl	L/d	PLATES	GRIP
TCLL	20.0	Plates Increase	1.25	TC	0.25	Vert(LL)	-0.02	2-4	>999	240	MT20	244/190
TCDL	7.0	Lumber Increase	1.25	BC	0.14	Vert(TL)	-0.04	2-4	>999	180		
BCLL	10.0	Rep Stress Incr	YES	WB	0.00	Horz(TL)	-0.00	3	n/a	n/a		
BCDL	5.0	Code FBC2001/TPI2002		(Matrix)							Weight: 20 lb	

LUMBER
TOP CHORD 2 X 4 SYP No.2D
BOT CHORD 2 X 4 SYP No.2D

BRACING
TOP CHORD Structural wood sheathing directly applied or 5-0-0 oc purlins.
BOT CHORD Rigid ceiling directly applied or 10-0-0 oc bracing.

REACTIONS (lb/size) 3=101/Mechanical, 2=340/0-3-8, 4=71/Mechanical
Max Horz 2=205(load case 5)
Max Uplift3=-93(load case 5), 2=-191(load case 5)

FORCES (lb) - Maximum Compression/Maximum Tension
TOP CHORD 1-2=0/54, 2-3=-80/39
BOT CHORD 2-4=0/0

NOTES
1) Wind: ASCE 7-98; 110mph (3-second gust); h=20ft; TCDL=4.2psf; BCDL=3.0psf; Category II; Exp B; enclosed; MWFRS gable end zone and C-C Exterior(2) zone; Lumber DOL=1.60 plate grip DOL=1.60. This truss is designed for C-C for members and forces, and for MWFRS for reactions specified.
2) Refer to girder(s) for truss to truss connections.
3) Provide mechanical connection (by others) of truss to bearing plate capable of withstanding 93 lb uplift at joint 3 and 191 lb uplift at joint 2.

LOAD CASE(S) Standard

SEPTEMBER 21, 2005 TRUSS DESIGN ENGINEER:
THOMAS E. MILLER PE 56877, BYRON K. ANDERSON PE 60987
STRUCTURAL ENGINEERING AND INSPECTIONS, INC. EB 9196
16105 N. FLORIDA AVE. STE B, LUTZ, FL 33549

Job	Truss	Truss Type	Qty	Ply	Dwg.#092105552
L130833	EJ5V	SPECIAL	2	1	Job Reference (optional)

Builders FirstSource, Lake City, Fl 32055

6.200 s Jul 13 2005 MiTek Industries, Inc. Tue Sep 20 17:50:42 2005 Page 1

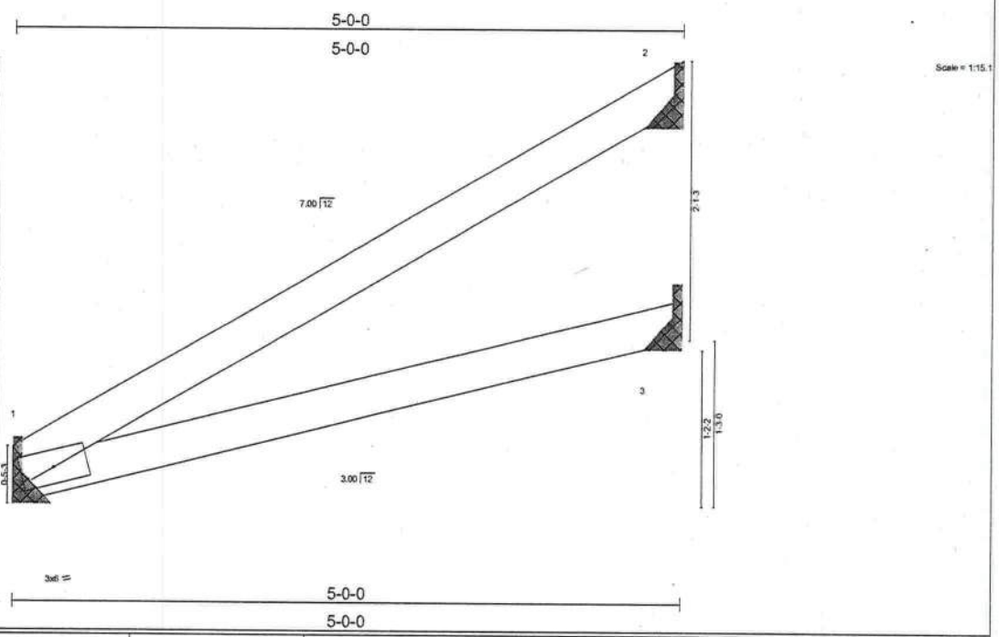

LOADING (psf)		SPACING	2-0-0	CSI		DEFL	in	(loc)	l/defl	L/d	PLATES	GRIP
TCLL	20.0	Plates Increase	1.25	TC	0.24	Vert(LL)	-0.03	1-3	>999	240	MT20	244/190
TCDL	7.0	Lumber Increase	1.25	BC	0.14	Vert(TL)	-0.04	1-3	>999	180		
BCLL	10.0	Rep Stress Incr	YES	WB	0.00	Horz(TL)	-0.00	2	n/a	n/a		
BCDL	5.0	Code FBC2001/TPI2002		(Matrix)							Weight: 17 lb	

LUMBER
TOP CHORD 2 X 4 SYP No.2D
BOT CHORD 2 X 4 SYP No.2D

BRACING
TOP CHORD Structural wood sheathing directly applied or 5-0-0 oc purlins.
BOT CHORD Rigid ceiling directly applied or 10-0-0 oc bracing.

REACTIONS (lb/size) 1=198/Mechanical, 2=127/Mechanical, 3=71/Mechanical
Max Horz 1=134(load case 5)
Max Uplift1=-33(load case 5), 2=-130(load case 5)

FORCES (lb) - Maximum Compression/Maximum Tension
TOP CHORD 1-2=-95/53
BOT CHORD 1-3=-14/14

NOTES
1) Wind: ASCE 7-98; 110mph (3-second gust); h=20ft; TCDL=4.2psf; BCDL=3.0psf; Category II; Exp B; enclosed: MWFRS gable end zone and C-C Exterior(2) zone; Lumber DOL=1.60 plate grip DOL=1.60. This truss is designed for C-C for members and forces, and for MWFRS for reactions specified.
2) Refer to girder(s) for truss to truss connections.
3) Provide mechanical connection (by others) of truss to bearing plate capable of withstanding 33 lb uplift at joint 1 and 130 lb uplift at joint 2.

LOAD CASE(S) Standard

SEPTEMBER 21, 2005 TRUSS DESIGN ENGINEER:
THOMAS E. MILLER PE 56877, BYRON K. ANDERSON PE 60987
STRUCTURAL ENGINEERING AND INSPECTIONS, INC. EB 9196
16105 N. FLORIDA AVE. STE B, LUTZ, FL 33549

Job	Truss	Truss Type	Qty	Ply	
L130833	EJ5X	SPECIAL	1	1	Job Reference (optional)

Dwg.#092105553

Builders FirstSource, Lake City, Fl 32055

6.200 s Jul 13 2005 MiTek Industries, Inc. Tue Sep 20 17:50:42 2005 Page 1

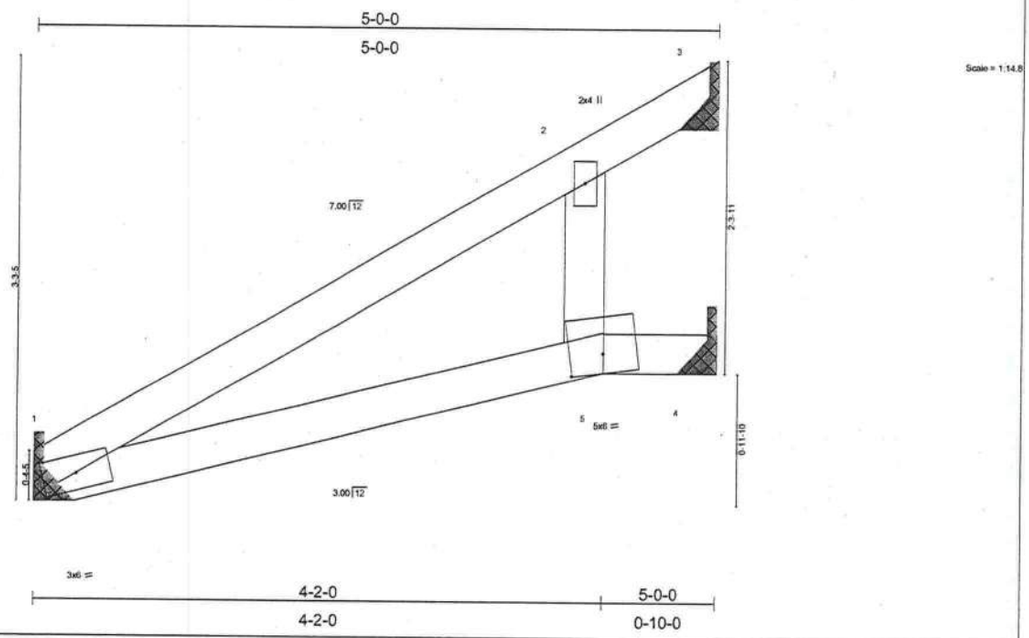

Plate Offsets (X,Y): [5:0-3-0,0-1-12]

LOADING (psf)		SPACING	2-0-0	CSI		DEFL	in	(loc)	l/defl	L/d	PLATES	GRIP
TCLL	20.0	Plates Increase	1.25	TC	0.29	Vert(LL)	0.06	5	>999	240	MT20	244/190
TCDL	7.0	Lumber Increase	1.25	BC	0.10	Vert(TL)	-0.06	1-5	>877	180		
BCLL	10.0	Rep Stress Incr	YES	WB	0.02	Horz(TL)	0.02	4	n/a	n/a		
BCDL	5.0	Code FBC2001/TPI2002		(Matrix)							Weight: 18 lb	

LUMBER
TOP CHORD 2 X 4 SYP No.2D
BOT CHORD 2 X 4 SYP No.2D
WEBS 2 X 4 SYP No.3

BRACING
TOP CHORD Structural wood sheathing directly applied or 5-0-0 oc purlins.
BOT CHORD Rigid ceiling directly applied or 6-0-0 oc bracing.

REACTIONS (lb/size) 1=198/Mechanical, 3=187/Mechanical, 4=10/Mechanical
Max Horz 1=134(load case 5)
Max Uplift1=-33(load case 5), 3=-118(load case 5)

FORCES (lb) - Maximum Compression/Maximum Tension
TOP CHORD 1-2=-95/34, 2-3=-71/92
BOT CHORD 1-5=-19/4, 4-5=-0/0
WEBS 2-5=0/69

NOTES
1) Wind: ASCE 7-98; 110mph (3-second gust); h=20ft; TCDL=4.2psf; BCDL=3.0psf; Category II; Exp B; enclosed; MWFRS gable end zone and C-C Exterior(2) zone; Lumber DOL=1.60 plate grip DOL=1.60. This truss is designed for C-C for members and forces, and for MWFRS for reactions specified.
2) Refer to girder(s) for truss to truss connections.
3) Provide mechanical connection (by others) of truss to bearing plate capable of withstanding 33 lb uplift at joint 1 and 118 lb uplift at joint 3.

LOAD CASE(S) Standard

SEPTEMBER 21, 2005 TRUSS DESIGN ENGINEER:
THOMAS E. MILLER PE 56877, BYRON K. ANDERSON PE 60987
STRUCTURAL ENGINEERING AND INSPECTIONS, INC. EB 9196
16105 N. FLORIDA AVE. STE B, LUTZ, FL 33549

Job	Truss	Truss Type	Qty	Ply	
L130833	EJ5Z	SPECIAL	1	1	Dwg.#092105554

Job Reference (optional)

Builders FirstSource, Lake City, Fl 32055

6.200 s Jul 13 2005 MiTek Industries, Inc. Tue Sep 20 17:50:43 2005 Page 1

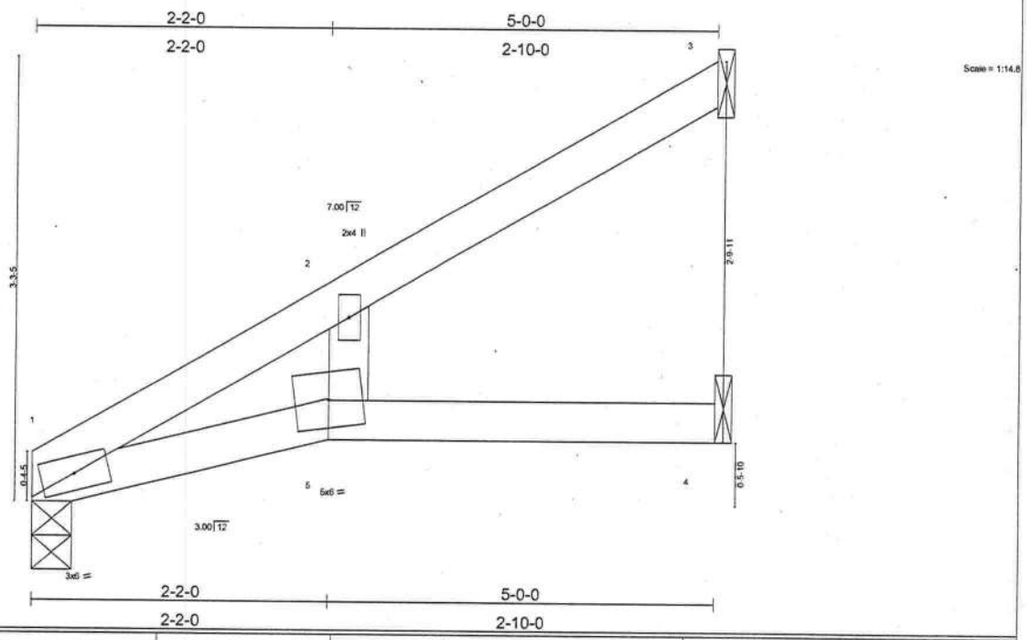

LOADING (psf)		SPACING	2-0-0	CSI		DEFL	in	(loc)	l/defl	L/d	PLATES	GRIP
TCLL	20.0	Plates Increase	1.25	TC	0.38	Vert(LL)	0.10	5	>565	240	MT20	244/190
TCDL	7.0	Lumber Increase	1.25	BC	0.05	Vert(TL)	-0.12	5	>468	180		
BCLL	10.0	Rep Stress Incr	YES	WB	0.02	Horz(TL)	0.03	4	n/a	n/a		
BCDL	5.0	Code FBC2001/TPI2002		(Matrix)							Weight: 18 lb	

LUMBER
TOP CHORD 2 X 4 SYP No.2D
BOT CHORD 2 X 4 SYP No.2D
WEBS 2 X 4 SYP No.3

BRACING
TOP CHORD Structural wood sheathing directly applied or 5-0-0 oc purlins.
BOT CHORD Rigid ceiling directly applied or 10-0-0 oc bracing.

REACTIONS (lb/size) 1=201/0-3-8, 3=160/Mechanical, 4=42/Mechanical
Max Horz 1=136(load case 5)
Max Uplift1=-34(load case 5), 3=-126(load case 5)

FORCES (lb) - Maximum Compression/Maximum Tension
TOP CHORD 1-2=-101/0, 2-3=-82/73
BOT CHORD 1-5=0/18, 4-5=-0/0
WEBS 2-5=0/76

NOTES
1) Wind: ASCE 7-98; 110mph (3-second gust); h=20ft; TCDL=4.2psf; BCDL=3.0psf; Category II; Exp B; enclosed; MWFRS gable end zone and C-C Exterior(2) zone; Lumber DOL=1.60 plate grip DOL=1.60. This truss is designed for C-C for members and forces, and for MWFRS for reactions specified.
2) Refer to girder(s) for truss to truss connections.
3) Bearing at joint(s) 1 considers parallel to grain value using ANSI/TPI 1 angle to grain formula. Building designer should verify capacity of bearing surface.
4) Provide mechanical connection (by others) of truss to bearing plate capable of withstanding 34 lb uplift at joint 1 and 126 lb uplift at joint 3.

LOAD CASE(S) Standard

SEPTEMBER 21, 2005 TRUSS DESIGN ENGINEER:
THOMAS E. MILLER PE 56877, BYRON K. ANDERSON PE 60987
STRUCTURAL ENGINEERING AND INSPECTIONS, INC. EB 9196
16105 N. FLORIDA AVE. STE B, LUTZ, FL 33549

Job	Truss	Truss Type	Qty	Ply	
L130833	EJ7	MONO TRUSS	19	1	Job Reference (optional)

Dwg.#092105555

Builders FirstSource, Lake City, Fl 32055

6.200 s Jul 13 2005 MiTek Industries, Inc. Tue Sep 20 17:50:43 2005 Page 1

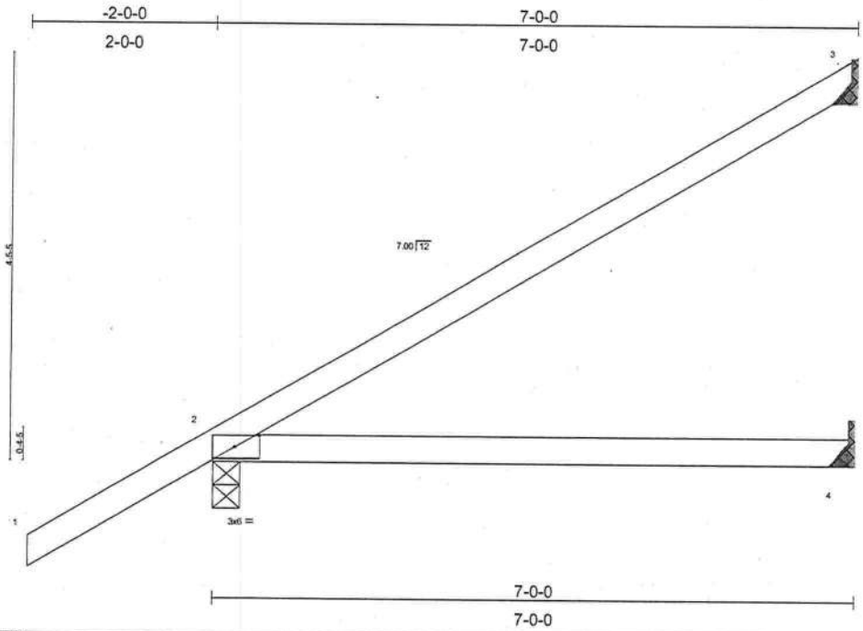

Plate Offsets (X,Y): [2:0-3-3,0-1-8]

LOADING (psf)		SPACING	2-0-0	CSI		DEFL	in	(loc)	l/defl	L/d	PLATES	GRIP
TCLL	20.0	Plates Increase	1.25	TC	0.38	Vert(LL)	-0.11	2-4	>728	240	MT20	244/190
TCDL	7.0	Lumber Increase	1.25	BC	0.30	Vert(TL)	-0.18	2-4	>436	180		
BCLL	10.0	Rep Stress Incr	YES	WB	0.00	Horz(TL)	-0.00	3	n/a	n/a		
BCDL	5.0	Code FBC2001/TPI2002		(Matrix)							Weight: 26 lb	

LUMBER
TOP CHORD 2 X 4 SYP No.2D
BOT CHORD 2 X 4 SYP No.2D

BRACING
TOP CHORD Structural wood sheathing directly applied or 6-0-0 oc purlins.
BOT CHORD Rigid ceiling directly applied or 10-0-0 oc bracing.

REACTIONS (lb/size) 3=160/Mechanical, 2=416/0-3-8, 4=103/Mechanical
Max Horz 2=259(load case 5)
Max Uplift3=-144(load case 5), 2=-196(load case 5)

FORCES (lb) - Maximum Compression/Maximum Tension
TOP CHORD 1-2=0/54, 2-3=-109/64
BOT CHORD 2-4=0/0

NOTES
1) Wind: ASCE 7-98; 110mph (3-second gust); h=20ft; TCDL=4.2psf; BCDL=3.0psf; Category II; Exp B; enclosed; MWFRS gable end zone and C-C Exterior(2) zone; Lumber DOL=1.60 plate grip DOL=1.60. This truss is designed for C-C for members and forces, and for MWFRS for reactions specified.
2) Refer to girder(s) for truss to truss connections.
3) Provide mechanical connection (by others) of truss to bearing plate capable of withstanding 144 lb uplift at joint 3 and 196 lb uplift at joint 2.

LOAD CASE(S) Standard

SEPTEMBER 21, 2005 TRUSS DESIGN ENGINEER:
THOMAS E. MILLER PE 56877, BYRON K. ANDERSON PE 60987
STRUCTURAL ENGINEERING AND INSPECTIONS, INC. EB 9196
16105 N. FLORIDA AVE. STE B, LUTZ, FL 33549

Job	Truss	Truss Type	Qty	Ply	
L130833	EJ7A	SPECIAL	6	1	Job Reference (optional)

Dwg.#092105556

Builders FirstSource, Lake City, Fl 32055

6.200 s Jul 13 2005 MiTek Industries, Inc. Tue Sep 20 17:50:44 2005 Page 1

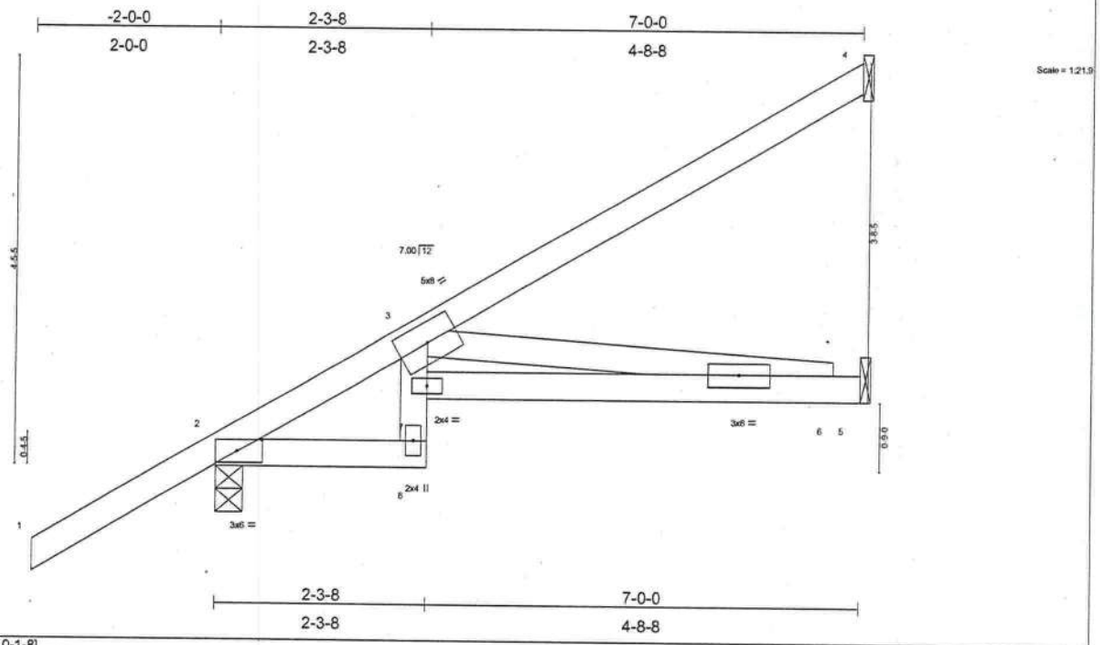

Plate Offsets (X,Y): [2:0-3-3,0-1-8]

LOADING (psf)		SPACING	2-0-0	CSI		DEFL	in	(loc)	l/defl	L/d	PLATES	GRIP
TCLL	20.0	Plates Increase	1.25	TC	0.24	Vert(LL)	-0.04	6-7	>999	240	MT20	244/190
TCDL	7.0	Lumber Increase	1.25	BC	0.61	Vert(TL)	-0.07	6-7	>999	180		
BCLL	10.0	Rep Stress Incr	YES	WB	0.32	Horz(TL)	0.03	5	n/a	n/a		
BCDL	5.0	Code FBC2001/TPI2002		(Matrix)							Weight: 34 lb	

LUMBER
TOP CHORD 2 X 4 SYP No.2D
BOT CHORD 2 X 4 SYP No.2D *Except*
B2 2 X 4 SYP No.3
WEBS 2 X 4 SYP No.3

BRACING
TOP CHORD Structural wood sheathing directly applied or 6-0-0 oc purlins.
BOT CHORD Rigid ceiling directly applied or 10-0-0 oc bracing.

REACTIONS (lb/size) 4=111/Mechanical, 2=419/0-3-8, 5=156/Mechanical
Max Horz 2=261(load case 5)
Max Uplift4=-104(load case 5), 2=-196(load case 5), 5=-35(load case 5)

FORCES (lb) - Maximum Compression/Maximum Tension
TOP CHORD 1-2=0/54, 2-3=-343/0, 3-4=-77/43
BOT CHORD 2-8=-88/233, 7-8=0/55, 3-7=0/107, 6-7=-391/768, 5-6=0/0
WEBS 3-6=-774/393

NOTES
1) Wind: ASCE 7-98; 110mph (3-second gust); h=20ft; TCDL=4.2psf; BCDL=3.0psf; Category II; Exp B; enclosed; MWFRS gable end zone and C-C Exterior(2) zone; Lumber DOL=1.60 plate grip DOL=1.60. This truss is designed for C-C for members and forces, and for MWFRS for reactions specified.
2) Refer to girder(s) for truss to truss connections.
3) Provide mechanical connection (by others) of truss to bearing plate capable of withstanding 104 lb uplift at joint 4, 196 lb uplift at joint 2 and 35 lb uplift at joint 5.

LOAD CASE(S) Standard

SEPTEMBER 21, 2005 TRUSS DESIGN ENGINEER:
THOMAS E. MILLER PE 56877, BYRON K. ANDERSON PE 60987
STRUCTURAL ENGINEERING AND INSPECTIONS, INC. EB 9196
16105 N. FLORIDA AVE. STE B, LUTZ, FL 33549

Job	Truss	Truss Type	Qty	Ply	
L130833	EJ7B	MONO HIP	1	1	Job Reference (optional)

Dwg.#092105557

Builders FirstSource, Lake City, Fl 32055

6.200 s Jul 13 2005 MiTek Industries, Inc. Tue Sep 20 17:50:45 2005 Page 1

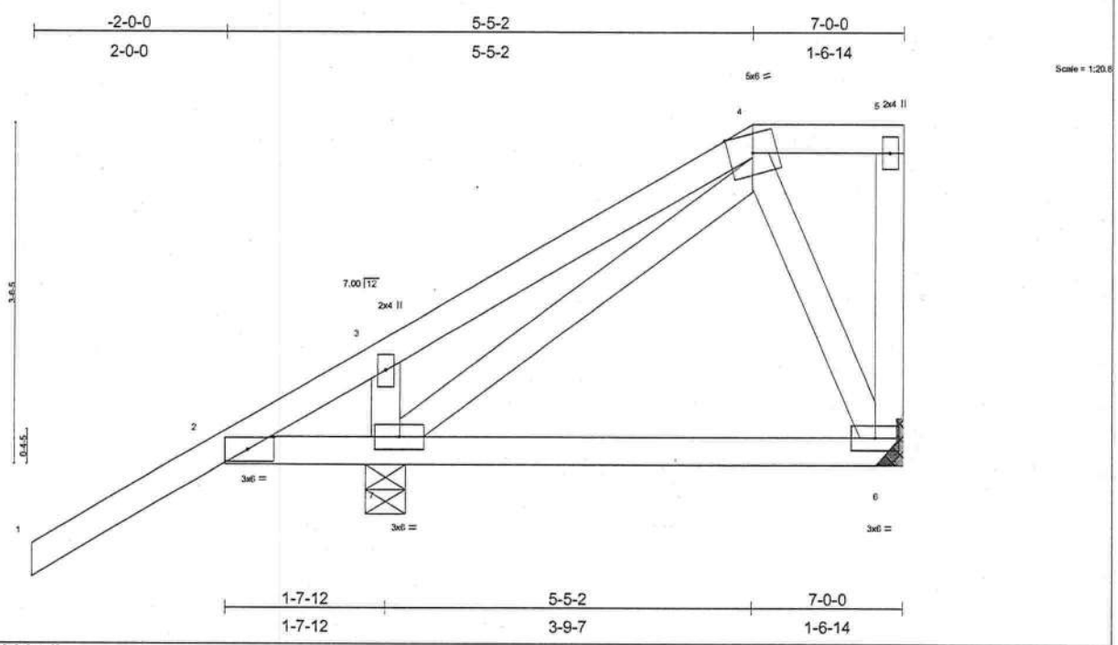

Plate Offsets (X,Y): [2:0-3-3,0-1-8]

LOADING (psf)		SPACING	2-0-0	CSI		DEFL	in	(loc)	l/defl	L/d	PLATES	GRIP
TCLL	20.0	Plates Increase	1.25	TC	0.22	Vert(LL)	-0.01	6-7	>999	240	MT20	244/190
TCDL	7.0	Lumber Increase	1.25	BC	0.21	Vert(TL)	-0.02	6-7	>999	180		
BCLL	10.0	Rep Stress Incr	YES	WB	0.17	Horz(TL)	0.00	6	n/a	n/a		
BCDL	5.0	Code FBC2001/TPI2002		(Matrix)							Weight: 43 lb	

LUMBER
TOP CHORD 2 X 4 SYP No.2D
BOT CHORD 2 X 4 SYP No.2D
WEBS 2 X 4 SYP No.3

BRACING
TOP CHORD Structural wood sheathing directly applied or 6-0-0 oc purlins, except end verticals.
BOT CHORD Rigid ceiling directly applied or 6-0-0 oc bracing.

REACTIONS (lb/size) 6=142/Mechanical, 7=541/0-4-15
Max Horz 7=222(load case 5)
Max Uplift6=-65(load case 4), 7=-318(load case 5)

FORCES (lb) - Maximum Compression/Maximum Tension
TOP CHORD 1-2=0/53, 2-3=-514/326, 3-4=-414/345, 4-5=-18/0, 5-6=-41/42
BOT CHORD 2-7=-255/538, 6-7=-29/40
WEBS 3-7=-164/181, 4-6=-61/88, 4-7=-388/429

NOTES
1) Unbalanced roof live loads have been considered for this design.
2) Wind: ASCE 7-98; 110mph (3-second gust); h=20ft; TCDL=4.2psf; BCDL=3.0psf; Category II; Exp B; enclosed; MWFRS gable end zone and C-C Exterior(2) zone; cantilever left exposed ; Lumber DOL=1.60 plate grip DOL=1.60. This truss is designed for C-C for members and forces, and for MWFRS for reactions specified.
3) This truss is not designed to support a ceiling and is not intended for use where aesthetics are a consideration.
4) Provide adequate drainage to prevent water ponding.
5) Refer to girder(s) for truss to truss connections.
6) Provide mechanical connection (by others) of truss to bearing plate capable of withstanding 65 lb uplift at joint 6 and 318 lb uplift at joint 7.

LOAD CASE(S) Standard

SEPTEMBER 21, 2005 TRUSS DESIGN ENGINEER:
THOMAS E. MILLER PE 56877, BYRON K. ANDERSON PE 60987
STRUCTURAL ENGINEERING AND INSPECTIONS, INC. EB 9196
16105 N. FLORIDA AVE. STE B, LUTZ, FL 33549

Job	Truss	Truss Type	Qty	Ply	Dwg.#092105558
L130833	EJ7C	MONO HIP	1	1	Job Reference (optional)

Builders FirstSource, Lake City, Fl 32055

6.200 s Jul 13 2005 MiTek Industries, Inc. Tue Sep 20 17:50:45 2005 Page 1

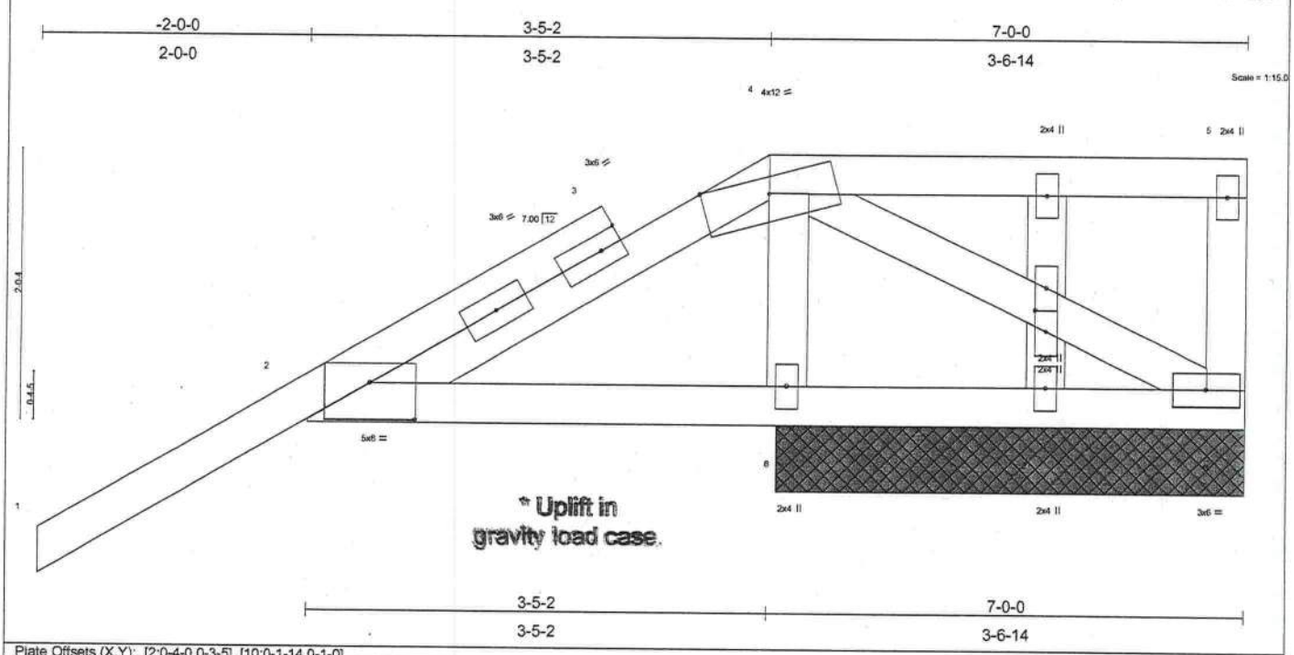

Plate Offsets (X,Y): [2:0-4-0,0-3-5], [10:0-1-14,0-1-0]

LOADING (psf)		SPACING	2-0-0	CSI		DEFL	in	(loc)	l/defl	L/d	PLATES	GRIP
TCLL	20.0	Plates Increase	1.25	TC	0.22	Vert(LL)	-0.03	1-2	n/r	90	MT20	244/190
TCDL	7.0	Lumber Increase	1.25	BC	0.17	Vert(TL)	-0.05	1-2	n/r	80		
BCLL	10.0	Rep Stress Incr	YES	WB	0.21	Horz(TL)	0.00	6	n/a	n/a		
BCDL	5.0	Code FBC2001/TPI2002		(Matrix)							Weight: 39 lb	

LUMBER
TOP CHORD 2 X 4 SYP No.2D
BOT CHORD 2 X 4 SYP No.2D
WEBS 2 X 4 SYP No.3
OTHERS 2 X 4 SYP No.3

BRACING
TOP CHORD Structural wood sheathing directly applied or 6-0-0 oc purlins, except end verticals.
BOT CHORD Rigid ceiling directly applied or 6-0-0 oc bracing.

* Uplift in gravity load case.

REACTIONS (lb/size) 6=-192/3-6-0, 8=850/3-6-0, 7=26/3-6-0
Max Horz 8=152(load case 5)
Max Uplift6=-192(load case 1), 8=-602(load case 5)
Max Grav 6=223(load case 5), 8=850(load case 1), 7=36(load case 3)

FORCES (lb) - Maximum Compression/Maximum Tension
TOP CHORD 1-2=0/53, 2-3=-702/537, 3-4=-695/614, 4-5=-10/24, 5-6=-83/92
BOT CHORD 2-8=-510/748, 7-8=-572/650, 6-7=-572/650
WEBS 4-8=-740/817, 4-6=-740/651

NOTES
1) Wind: ASCE 7-98; 110mph (3-second gust); h=20ft; TCDL=4.2psf; BCDL=3.0psf; Category II; Exp B; enclosed; MWFRS gable end zone and C-C Exterior(2) zone; cantilever left exposed ; Lumber DOL=1.60 plate grip DOL=1.60. This truss is designed for C-C for members and forces, and for MWFRS for reactions specified.
2) Truss designed for wind loads in the plane of the truss only. For studs exposed to wind (normal to the face), see MiTek "Standard Gable End Detail"
3) Provide adequate drainage to prevent water ponding.
4) Gable studs spaced at 2-0-0 oc.
5) Provide mechanical connection (by others) of truss to bearing plate capable of withstanding 192 lb uplift at joint 6 and 602 lb uplift at joint 8.
6) Non Standard bearing condition. Review required.

LOAD CASE(S) Standard

SEPTEMBER 21, 2005 TRUSS DESIGN ENGINEER:
THOMAS E. MILLER PE 56877, BYRON K. ANDERSON PE 60987
STRUCTURAL ENGINEERING AND INSPECTIONS, INC. EB 9196
16105 N. FLORIDA AVE. STE B, LUTZ, FL 33549

Job	Truss	Truss Type	Qty	Ply	
L130833	HJ5	MONO TRUSS	2	1	Job Reference (optional)

Dwg.#092105559

Builders FirstSource, Lake City, Fl 32055 — 6.200 s Jul 13 2005 MiTek Industries, Inc. Tue Sep 20 17:50:46 2005 Page 1

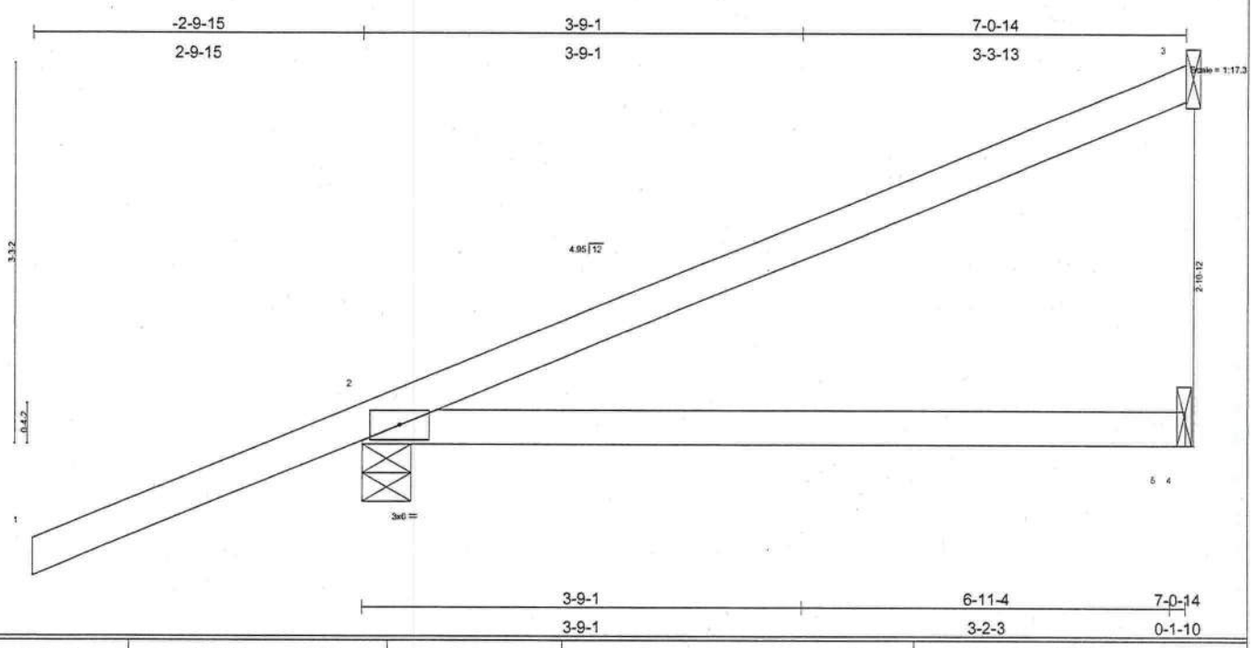

LOADING (psf)		SPACING	2-0-0	CSI		DEFL	in	(loc)	l/defl	L/d	PLATES	GRIP
TCLL	20.0	Plates Increase	1.25	TC	0.47	Vert(LL)	-0.07	2-5	>999	240	MT20	244/190
TCDL	7.0	Lumber Increase	1.25	BC	0.24	Vert(TL)	-0.12	2-5	>678	180		
BCLL	10.0	Rep Stress Incr	NO	WB	0.00	Horz(TL)	-0.00	3	n/a	n/a		
BCDL	5.0	Code FBC2001/TPI2002		(Matrix)							Weight: 27 lb	

LUMBER
TOP CHORD 2 X 4 SYP No.2D
BOT CHORD 2 X 4 SYP No.2D

BRACING
TOP CHORD Structural wood sheathing directly applied or 7-0-14 oc purlins.
BOT CHORD Rigid ceiling directly applied or 10-0-0 oc bracing.

REACTIONS (lb/size) 3=191/Mechanical, 2=373/0-4-15, 5=117/Mechanical
Max Horz 2=194(load case 4)
Max Uplift3=-155(load case 4), 2=-237(load case 4)

FORCES (lb) - Maximum Compression/Maximum Tension
TOP CHORD 1-2=0/57, 2-3=-82/51
BOT CHORD 2-5=-0/0, 4-5=-0/0

NOTES
1) Wind: ASCE 7-98; 110mph (3-second gust); h=20ft; TCDL=4.2psf; BCDL=3.0psf; Category II; Exp B; enclosed; MWFRS gable end zone; Lumber DOL=1.60 plate grip DOL=1.60.
2) This truss is not designed to support a ceiling and is not intended for use where aesthetics are a consideration.
3) Refer to girder(s) for truss to truss connections.
4) Provide mechanical connection (by others) of truss to bearing plate capable of withstanding 155 lb uplift at joint 3 and 237 lb uplift at joint 2.
5) In the LOAD CASE(S) section, loads applied to the face of the truss are noted as front (F) or back (B).

LOAD CASE(S) Standard
1) Regular: Lumber Increase=1.25, Plate Increase=1.25
Uniform Loads (plf)
Vert: 1-2=-54
Trapezoidal Loads (plf)
Vert: 2=-3(F=26, B=26)-to-3=-95(F=-21, B=-21), 2=-0(F=15, B=15)-to-4=-53(F=-12, B=-12)

SEPTEMBER 21, 2005 TRUSS DESIGN ENGINEER:
THOMAS E. MILLER PE 56877, BYRON K. ANDERSON PE 60987
STRUCTURAL ENGINEERING AND INSPECTIONS, INC. EB 9196
16105 N. FLORIDA AVE. STE B, LUTZ, FL 33549

Job	Truss	Truss Type	Qty	Ply	Dwg.#092105560
L130833	HJ5V	MONO SCISSOR	1	1	Job Reference (optional)

Builders FirstSource, Lake City, Fl 32055 — 6.200 s Jul 13 2005 MiTek Industries, Inc. Tue Sep 20 17:50:46 2005 Page 1

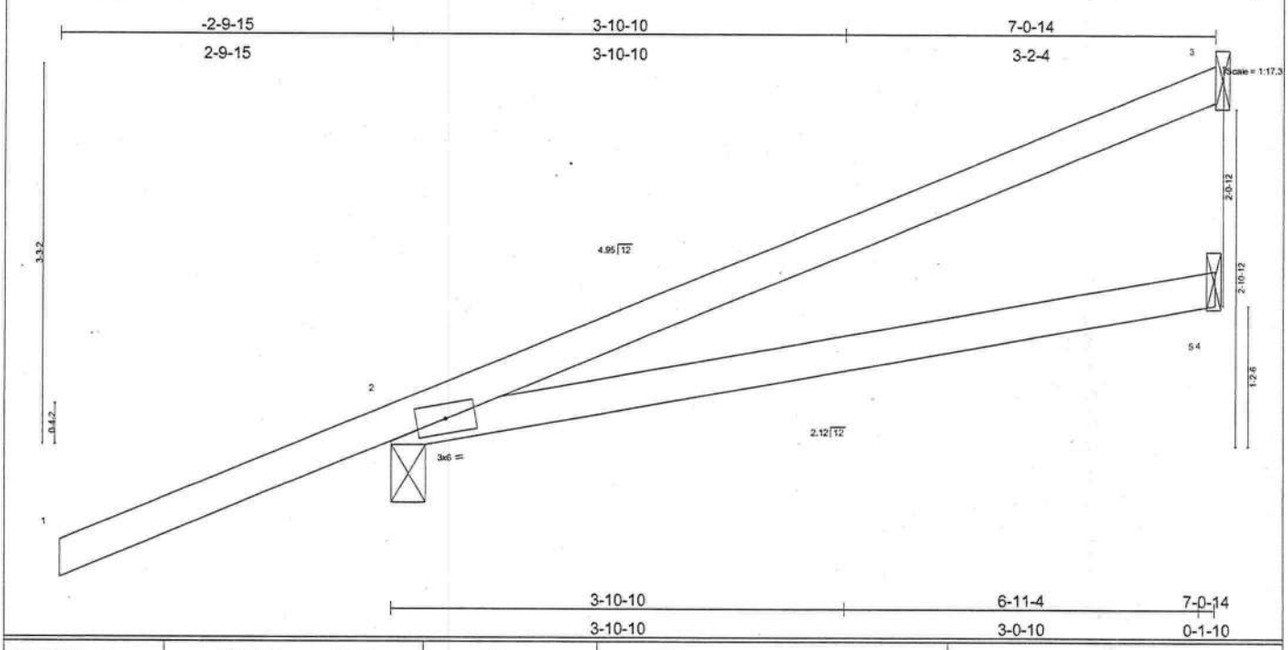

LOADING (psf)		SPACING	2-0-0	CSI		DEFL	in	(loc)	l/defl	L/d	PLATES	GRIP
TCLL	20.0	Plates Increase	1.25	TC	0.45	Vert(LL)	-0.07	2-5	>999	240	MT20	244/190
TCDL	7.0	Lumber Increase	1.25	BC	0.24	Vert(TL)	-0.13	2-5	>633	180		
BCLL	10.0	Rep Stress Incr	NO	WB	0.00	Horz(TL)	-0.00	3	n/a	n/a		
BCDL	5.0	Code FBC2001/TPI2002		(Matrix)							Weight: 27 lb	

LUMBER
TOP CHORD 2 X 4 SYP No.2D
BOT CHORD 2 X 4 SYP No.2D

BRACING
TOP CHORD Structural wood sheathing directly applied or 7-0-14 oc purlins.
BOT CHORD Rigid ceiling directly applied or 6-0-0 oc bracing.

REACTIONS (lb/size) 3=193/Mechanical, 2=368/0-3-8, 5=119/Mechanical
Max Horz 2=192(load case 4)
Max Uplift3=-156(load case 4), 2=-230(load case 4)

FORCES (lb) - Maximum Compression/Maximum Tension
TOP CHORD 1-2=0/56, 2-3=-82/52
BOT CHORD 2-5=-12/13, 4-5=-2/0

NOTES
1) Wind: ASCE 7-98; 110mph (3-second gust); h=20ft; TCDL=4.2psf; BCDL=3.0psf; Category II; Exp B; enclosed; MWFRS gable end zone; Lumber DOL=1.60 plate grip DOL=1.60.
2) This truss is not designed to support a ceiling and is not intended for use where aesthetics are a consideration.
3) Refer to girder(s) for truss to truss connections.
4) Bearing at joint(s) 2 considers parallel to grain value using ANSI/TPI 1 angle to grain formula. Building designer should verify capacity of bearing surface.
5) Provide mechanical connection (by others) of truss to bearing plate capable of withstanding 156 lb uplift at joint 3 and 230 lb uplift at joint 2.
6) In the LOAD CASE(S) section, loads applied to the face of the truss are noted as front (F) or back (B).

LOAD CASE(S) Standard
1) Regular: Lumber Increase=1.25, Plate Increase=1.25
Uniform Loads (plf)
Vert: 1-2=-54
Trapezoidal Loads (plf)
Vert: 2=-2(F=26, B=26)-to-3=-95(F=-21, B=-21), 2=0(F=15, B=15)-to-4=-53(F=-12, B=-12)

SEPTEMBER 21, 2005 TRUSS DESIGN ENGINEER:
THOMAS E. MILLER PE 56877, BYRON K. ANDERSON PE 60987
STRUCTURAL ENGINEERING AND INSPECTIONS, INC. EB 9196
16105 N. FLORIDA AVE. STE B, LUTZ, FL 33549

Job	Truss	Truss Type	Qty	Ply	Dwg.#092105561
L130833	HJ7	MONO TRUSS	2	1	Job Reference (optional)

Builders FirstSource, Lake City, Fl 32055 — 6.200 s Jul 13 2005 MiTek Industries, Inc. Tue Sep 20 17:50:47 2005 Page 1

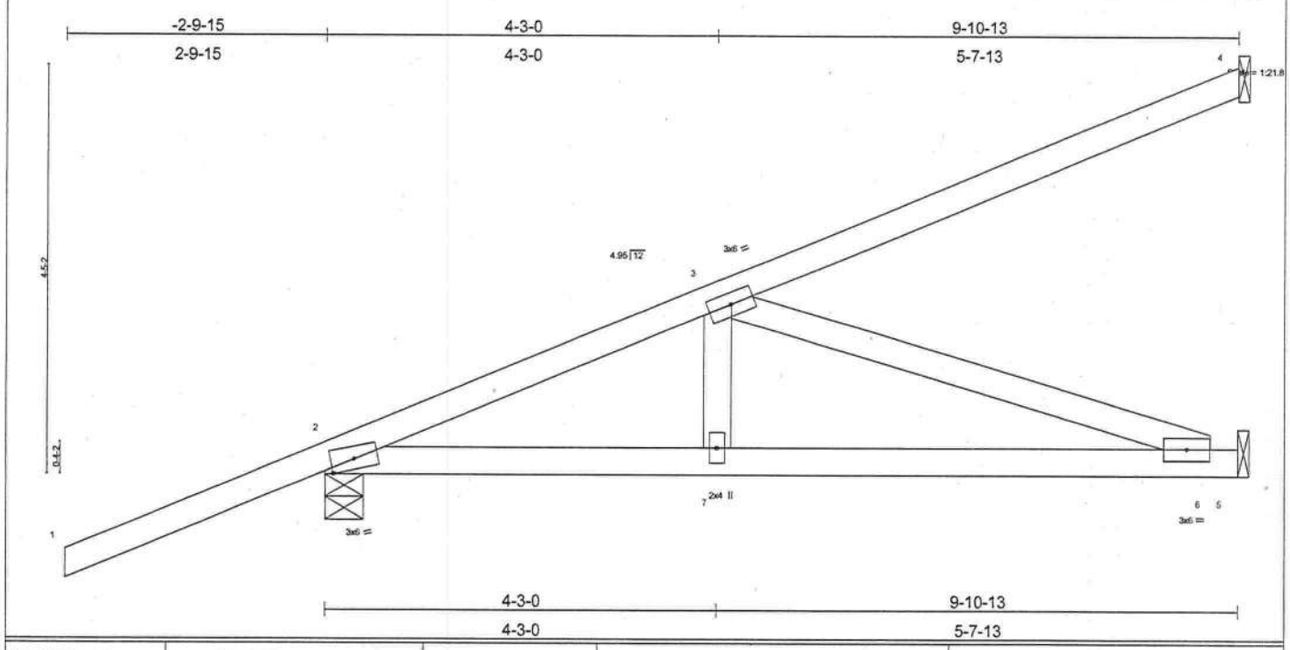

LOADING (psf)		SPACING	2-0-0	CSI		DEFL	in	(loc)	l/defl	L/d	PLATES	GRIP
TCLL	20.0	Plates Increase	1.25	TC	0.54	Vert(LL)	-0.09	6-7	>999	240	MT20	244/190
TCDL	7.0	Lumber Increase	1.25	BC	0.49	Vert(TL)	-0.15	6-7	>761	180		
BCLL	10.0	Rep Stress Incr	NO	WB	0.44	Horz(TL)	0.01	5	n/a	n/a		
BCDL	5.0	Code FBC2001/TPI2002		(Matrix)							Weight: 46 lb	

LUMBER
TOP CHORD 2 X 4 SYP No.2D
BOT CHORD 2 X 4 SYP No.2D
WEBS 2 X 4 SYP No.3

BRACING
TOP CHORD Structural wood sheathing directly applied or 6-0-0 oc purlins.
BOT CHORD Rigid ceiling directly applied or 10-0-0 oc bracing.

REACTIONS (lb/size) 4=268/Mechanical, 2=532/0-4-15, 5=378/Mechanical
Max Horz 2=315(load case 4)
Max Uplift4=-248(load case 4), 2=-258(load case 4), 5=-72(load case 4)

FORCES (lb) - Maximum Compression/Maximum Tension
TOP CHORD 1-2=0/57, 2-3=-782/62, 3-4=-126/75
BOT CHORD 2-7=-290/707, 6-7=-290/707, 5-6=0/0
WEBS 3-7=0/182, 3-6=-746/306

NOTES
1) Wind: ASCE 7-98; 110mph (3-second gust); h=20ft; TCDL=4.2psf; BCDL=3.0psf; Category II; Exp B; enclosed; MWFRS gable end zone; Lumber DOL=1.60 plate grip DOL=1.60.
2) Refer to girder(s) for truss to truss connections.
3) Provide mechanical connection (by others) of truss to bearing plate capable of withstanding 248 lb uplift at joint 4, 258 lb uplift at joint 2 and 72 lb uplift at joint 5.
4) In the LOAD CASE(S) section, loads applied to the face of the truss are noted as front (F) or back (B).

LOAD CASE(S) Standard
1) Regular: Lumber Increase=1.25, Plate Increase=1.25
Uniform Loads (plf)
Vert: 1-2=-54
Trapezoidal Loads (plf)
Vert: 2=-3(F=26, B=26)-to-4=-134(F=-40, B=-40), 2=-0(F=15, B=15)-to-5=-74(F=-22, B=-22)

SEPTEMBER 21, 2005 TRUSS DESIGN ENGINEER:
THOMAS E. MILLER PE 56877, BYRON K. ANDERSON PE 60987
STRUCTURAL ENGINEERING AND INSPECTIONS, INC. EB 9196
16105 N. FLORIDA AVE. STE B, LUTZ, FL 33549

Job	Truss	Truss Type	Qty	Ply	
L130833	T01	COMMON	11	1	Job Reference (optional)

Dwg.#092105562

Builders FirstSource, Lake City, Fl 32055 — 6.200 s Jul 13 2005 MiTek Industries, Inc. Tue Sep 20 17:50:48 2005 Page 1

-2-0-0	5-7-13	10-10-0	16-0-3	21-8-0	23-8-0
2-0-0	5-7-13	5-2-3	5-2-3	5-7-13	2-0-0

Scale = 1:42.1

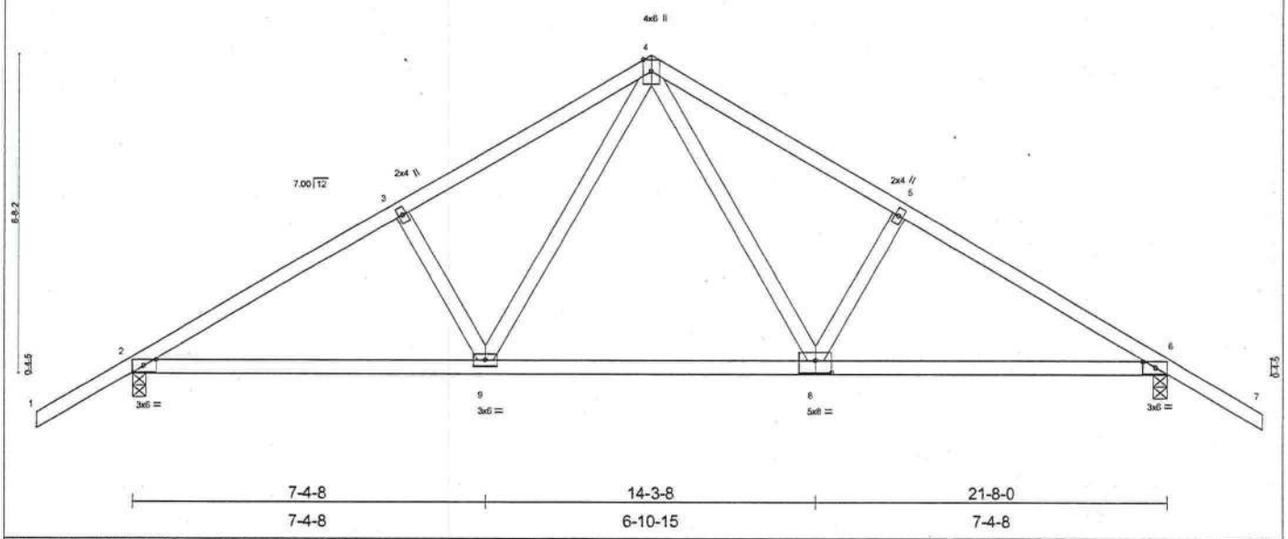

Plate Offsets (X,Y): [2:0-3-3,0-1-8], [6:0-3-3,0-1-8], [8:0-4-0,0-3-0]

LOADING (psf)		SPACING	2-0-0	CSI		DEFL	in	(loc)	l/defl	L/d	PLATES	GRIP
TCLL	20.0	Plates Increase	1.25	TC	0.26	Vert(LL)	-0.18	8-9	>999	240	MT20	244/190
TCDL	7.0	Lumber Increase	1.25	BC	0.71	Vert(TL)	-0.29	8-9	>885	180		
BCLL	10.0	Rep Stress Incr	NO	WB	0.24	Horz(TL)	0.04	6	n/a	n/a		
BCDL	5.0	Code FBC2001/TPI2002		(Matrix)							Weight: 108 lb	

LUMBER
TOP CHORD 2 X 4 SYP No.2D
BOT CHORD 2 X 4 SYP No.2D
WEBS 2 X 4 SYP No.3

BRACING
TOP CHORD Structural wood sheathing directly applied or 4-10-2 oc purlins.
BOT CHORD Rigid ceiling directly applied or 9-8-9 oc bracing.

REACTIONS (lb/size) 2=1186/0-3-8, 6=1186/0-3-8
Max Horz 2=227(load case 4)
Max Uplift2=-459(load case 5), 6=-459(load case 6)

FORCES (lb) - Maximum Compression/Maximum Tension
TOP CHORD 1-2=0/54, 2-3=-1713/567, 3-4=-1569/597, 4-5=-1569/597, 5-6=-1713/567, 6-7=0/54
BOT CHORD 2-9=-438/1401, 8-9=-203/962, 6-8=-322/1401
WEBS 3-9=-239/232, 4-9=-259/710, 4-8=-259/710, 5-8=-239/232

NOTES
1) Unbalanced roof live loads have been considered for this design.
2) Wind: ASCE 7-98; 110mph (3-second gust); h=20ft; TCDL=4.2psf; BCDL=3.0psf; Category II; Exp B; enclosed; MWFRS gable end zone and C-C Exterior(2) zone; Lumber DOL=1.60 plate grip DOL=1.60. This truss is designed for C-C for members and forces, and for MWFRS for reactions specified.
3) Provide mechanical connection (by others) of truss to bearing plate capable of withstanding 459 lb uplift at joint 2 and 459 lb uplift at joint 6.
4) In the LOAD CASE(S) section, loads applied to the face of the truss are noted as front (F) or back (B).

LOAD CASE(S) Standard
1) Regular: Lumber Increase=1.25, Plate Increase=1.25
Uniform Loads (plf)
Vert: 1-4=-54, 4-7=-54, 2-9=-30, 8-9=-80(F=-50), 6-8=-30

SEPTEMBER 21, 2005 TRUSS DESIGN ENGINEER:
THOMAS E. MILLER PE 56877, BYRON K. ANDERSON PE 60987
STRUCTURAL ENGINEERING AND INSPECTIONS, INC. EB 9196
16105 N. FLORIDA AVE. STE B, LUTZ, FL 33549

Job	Truss	Truss Type	Qty	Ply	
L130833	T01G	COMMON	1	1	Job Reference (optional)

Dwg.#092105563

Builders FirstSource, Lake City, Fl 32055 — 6.200 s Jul 13 2005 MiTek Industries, Inc. Tue Sep 20 17:50:49 2005 Page 1

-2-0-0	5-7-13	10-10-0	16-0-3	21-8-0	23-8-0
2-0-0	5-7-13	5-2-3	5-2-3	5-7-13	2-0-0

Scale = 1:42.1

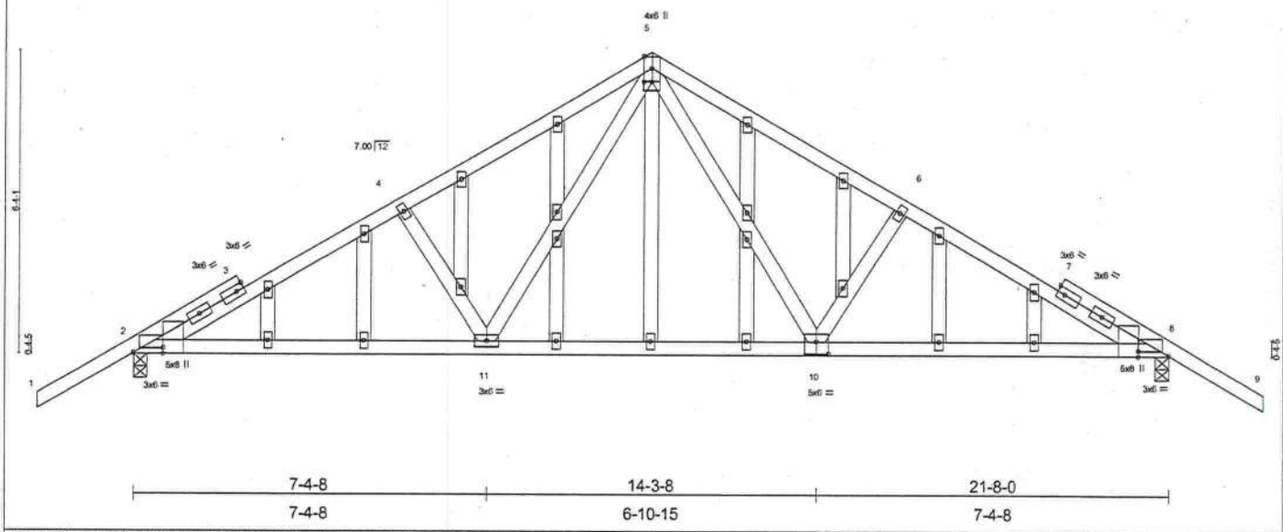

Plate Offsets (X,Y): [2:0-7-9,0-1-4], [2:0-0-4,Edge], [5:0-2-0,0-0-0], [8:0-7-9,0-1-4], [8:0-0-4,Edge], [10:0-3-0,0-3-0]

LOADING (psf)		SPACING	2-0-0	CSI		DEFL	in	(loc)	l/defl	L/d	PLATES	GRIP
TCLL	20.0	Plates Increase	1.25	TC	0.64	Vert(LL)	-0.14	8-10	>999	240	MT20	244/190
TCDL	7.0	Lumber Increase	1.25	BC	0.55	Vert(TL)	-0.23	8-10	>999	180		
BCLL	10.0	Rep Stress Incr	NO	WB	0.28	Horz(TL)	0.06	8	n/a	n/a		
BCDL	5.0	Code FBC2001/TPI2002		(Matrix)							Weight: 152 lb	

LUMBER
TOP CHORD 2 X 4 SYP No.2D
BOT CHORD 2 X 4 SYP No.2D
WEBS 2 X 4 SYP No.3
OTHERS 2 X 4 SYP No.3

BRACING
TOP CHORD Structural wood sheathing directly applied or 3-3-15 oc purlins.
BOT CHORD Rigid ceiling directly applied or 7-9-6 oc bracing.

REACTIONS (lb/size) 2=1784/0-3-8, 8=1784/0-3-8
Max Horz 2=215(load case 4)
Max Uplift2=-686(load case 5), 8=-686(load case 6)

FORCES (lb) - Maximum Compression/Maximum Tension
TOP CHORD 1-2=-14/113, 2-3=-2534/824, 3-4=-2425/814, 4-5=-2230/789, 5-6=-2230/789, 6-7=-2425/814, 7-8=-2534/824, 8-9=-14/113
BOT CHORD 2-11=-693/2112, 10-11=-350/1353, 8-10=-570/2112
WEBS 4-11=-625/362, 5-11=-310/879, 5-10=-310/879, 6-10=-625/362

NOTES
1) Unbalanced roof live loads have been considered for this design.
2) Wind: ASCE 7-98; 110mph (3-second gust); h=20ft; TCDL=4.2psf; BCDL=3.0psf; Category II; Exp B; enclosed; MWFRS gable end zone and C-C Exterior(2) zone; Lumber DOL=1.60 plate grip DOL=1.60. This truss is designed for C-C for members and forces, and for MWFRS for reactions specified.
3) Truss designed for wind loads in the plane of the truss only. For studs exposed to wind (normal to the face), see MiTek "Standard Gable End Detail"
4) All plates are 2x4 MT20 unless otherwise indicated.
5) Gable studs spaced at 2-0-0 oc.
6) Provide mechanical connection (by others) of truss to bearing plate capable of withstanding 686 lb uplift at joint 2 and 686 lb uplift at joint 8.
7) In the LOAD CASE(S) section, loads applied to the face of the truss are noted as front (F) or back (B).

LOAD CASE(S) Standard
1) Regular: Lumber Increase=1.25, Plate Increase=1.25
Uniform Loads (plf)
Vert: 1-5=-114(F=-60), 5-9=-114(F=-60), 2-8=-30

SEPTEMBER 21, 2005 TRUSS DESIGN ENGINEER:
THOMAS E. MILLER PE 56877, BYRON K. ANDERSON PE 60987
STRUCTURAL ENGINEERING AND INSPECTIONS, INC. EB 9196
16105 N. FLORIDA AVE. STE B, LUTZ, FL 33549

Job	Truss	Truss Type	Qty	Ply	Dwg.#092105564
L130833	T02	COMMON	2	1	Job Reference (optional)

Builders FirstSource, Lake City, Fl 32055

6.200 s Jul 13 2005 MiTek Industries, Inc. Tue Sep 20 17:50:50 2005 Page 1

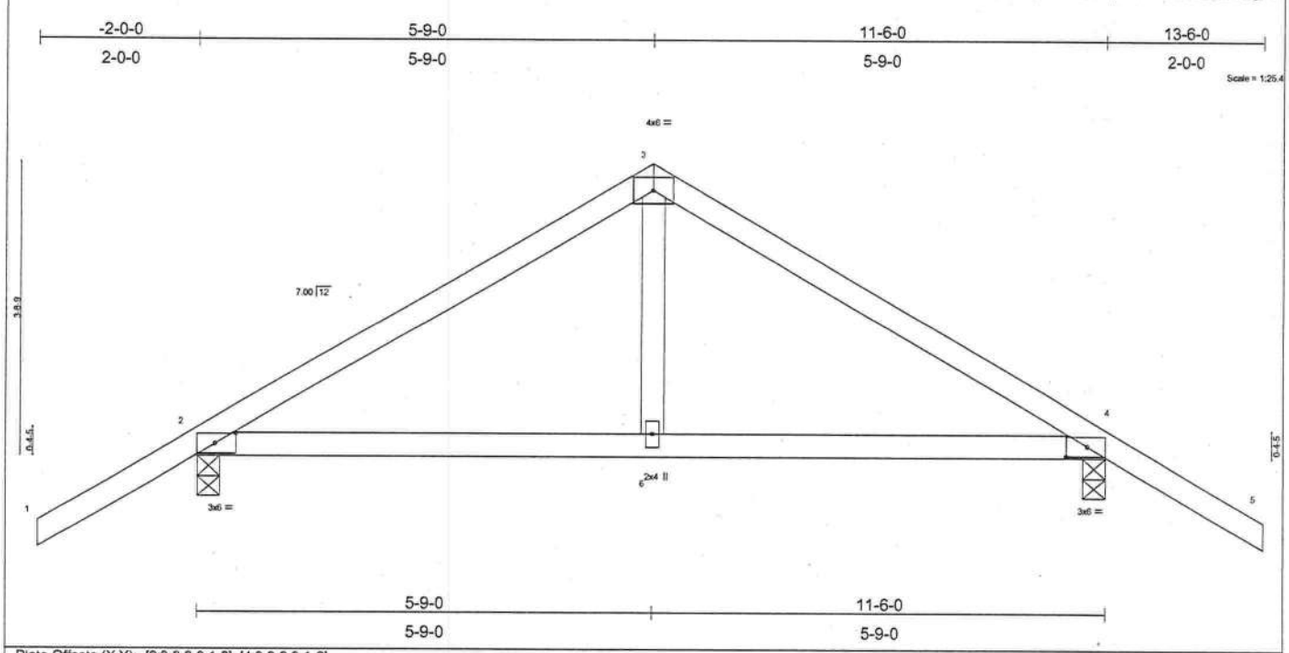

Plate Offsets (X,Y): [2:0-3-3,0-1-8], [4:0-3-3,0-1-8]

LOADING (psf)		SPACING	2-0-0	CSI		DEFL	in	(loc)	l/defl	L/d	PLATES	GRIP
TCLL	20.0	Plates Increase	1.25	TC	0.23	Vert(LL)	-0.03	4-6	>999	240	MT20	244/190
TCDL	7.0	Lumber Increase	1.25	BC	0.18	Vert(TL)	-0.04	4-6	>999	180		
BCLL	10.0	Rep Stress Incr	YES	WB	0.06	Horz(TL)	0.01	4	n/a	n/a		
BCDL	5.0	Code FBC2001/TPI2002		(Matrix)							Weight: 49 lb	

LUMBER
TOP CHORD 2 X 4 SYP No.2D
BOT CHORD 2 X 4 SYP No.2D
WEBS 2 X 4 SYP No.3

BRACING
TOP CHORD Structural wood sheathing directly applied or 6-0-0 oc purlins.
BOT CHORD Rigid ceiling directly applied or 10-0-0 oc bracing.

REACTIONS (lb/size) 2=587/0-3-8, 4=587/0-3-8
Max Horz 2=-124(load case 3)
Max Uplift2=-272(load case 5), 4=-272(load case 6)

FORCES (lb) - Maximum Compression/Maximum Tension
TOP CHORD 1-2=0/54, 2-3=-572/158, 3-4=-572/158, 4-5=0/54
BOT CHORD 2-6=-45/427, 4-6=-45/427
WEBS 3-6=0/192

NOTES
1) Unbalanced roof live loads have been considered for this design.
2) Wind: ASCE 7-98; 110mph (3-second gust); h=20ft; TCDL=4.2psf; BCDL=3.0psf; Category II; Exp B; enclosed; MWFRS gable end zone and C-C Exterior(2) zone; Lumber DOL=1.60 plate grip DOL=1.60. This truss is designed for C-C for members and forces, and for MWFRS for reactions specified.
3) Provide mechanical connection (by others) of truss to bearing plate capable of withstanding 272 lb uplift at joint 2 and 272 lb uplift at joint 4.

LOAD CASE(S) Standard

SEPTEMBER 21, 2005 TRUSS DESIGN ENGINEER:
THOMAS E. MILLER PE 56877, BYRON K. ANDERSON PE 60987
STRUCTURAL ENGINEERING AND INSPECTIONS, INC. EB 9196
16105 N. FLORIDA AVE. STE B, LUTZ, FL 33549

Job	Truss	Truss Type	Qty	Ply	Dwg.#092105565
L130833	T02G	COMMON	1	1	Job Reference (optional)

Builders FirstSource, Lake City, Fl 32055

6.200 s Jul 13 2005 MiTek Industries, Inc. Tue Sep 20 17:50:51 2005 Page 1

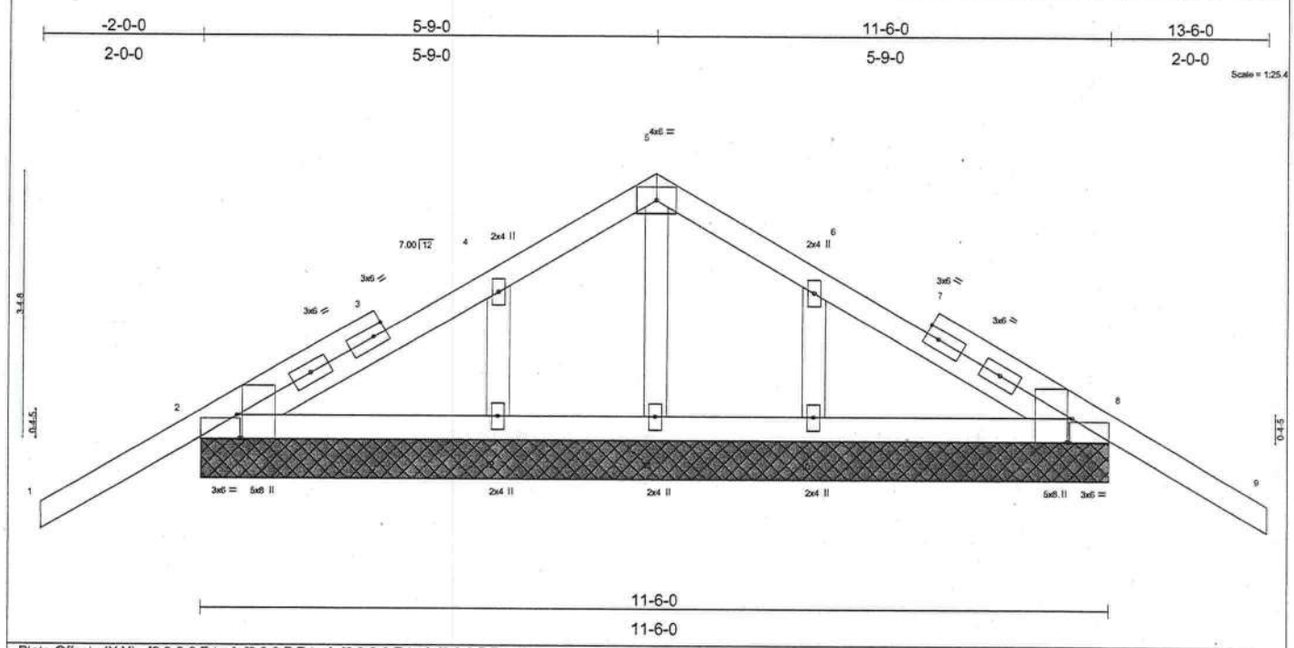

Plate Offsets (X,Y): [2:0-3-8,Edge], [2:0-0-7,Edge], [8:0-3-8,Edge], [8:0-0-7,Edge]

LOADING (psf)		SPACING	2-0-0	CSI		DEFL	in	(loc)	l/defl	L/d	PLATES	GRIP
TCLL	20.0	Plates Increase	1.25	TC	0.44	Vert(LL)	-0.04	9	n/r	90	MT20	244/190
TCDL	7.0	Lumber Increase	1.25	BC	0.05	Vert(TL)	-0.06	9	n/r	80		
BCLL	10.0	Rep Stress Incr	NO	WB	0.05	Horz(TL)	0.00	8	n/a	n/a		
BCDL	5.0	Code FBC2001/TPI2002		(Matrix)							Weight: 59 lb	

LUMBER
TOP CHORD 2 X 4 SYP No.2D
BOT CHORD 2 X 4 SYP No.2D
OTHERS 2 X 4 SYP No.3

BRACING
TOP CHORD Structural wood sheathing directly applied or 6-0-0 oc purlins.
BOT CHORD Rigid ceiling directly applied or 6-0-0 oc bracing.

REACTIONS (lb/size) 2=523/11-6-0, 8=523/11-6-0, 11=235/11-6-0, 12=416/11-6-0, 10=416/11-6-0
Max Horz 2=112(load case 4)
Max Uplift2=-288(load case 5), 8=-308(load case 6), 11=-40(load case 5), 12=-149(load case 5), 10=-153(load case 6)
Max Grav 2=524(load case 7), 8=524(load case 8), 11=235(load case 1), 12=419(load case 7), 10=419(load case 8)

FORCES (lb) - Maximum Compression/Maximum Tension
TOP CHORD 1-2=-14/112, 2-3=-83/81, 3-4=-56/114, 4-5=-51/113, 5-6=-51/113, 6-7=-11/114, 7-8=-83/48, 8-9=-14/112
BOT CHORD 2-12=-20/112, 11-12=-20/112, 10-11=-20/112, 8-10=-20/112
WEBS 5-11=-201/42, 4-12=-322/178, 6-10=-322/182

NOTES
1) Unbalanced roof live loads have been considered for this design.
2) Wind: ASCE 7-98; 110mph (3-second gust); h=20ft; TCDL=4.2psf; BCDL=3.0psf; Category II; Exp B; enclosed; MWFRS gable end zone and C-C Exterior(2) zone; Lumber DOL=1.60 plate grip DOL=1.60. This truss is designed for C-C for members and forces, and for MWFRS for reactions specified.
3) Truss designed for wind loads in the plane of the truss only. For studs exposed to wind (normal to the face), see MiTek "Standard Gable End Detail"
4) Gable requires continuous bottom chord bearing.
5) Gable studs spaced at 2-0-0 oc.
6) Provide mechanical connection (by others) of truss to bearing plate capable of withstanding 288 lb uplift at joint 2, 308 lb uplift at joint 8, 40 lb uplift at joint 11, 149 lb uplift at joint 12 and 153 lb uplift at joint 10.
7) In the LOAD CASE(S) section, loads applied to the face of the truss are noted as front (F) or back (B).

LOAD CASE(S) Standard
1) Regular: Lumber Increase=1.25, Plate Increase=1.25
Uniform Loads (plf)
Vert: 1-5=-114(F=-60), 5-9=-114(F=-60), 2-8=-30

SEPTEMBER 21, 2005 TRUSS DESIGN ENGINEER:
THOMAS E. MILLER PE 56877, BYRON K. ANDERSON PE 60987
STRUCTURAL ENGINEERING AND INSPECTIONS, INC. EB 9196
16105 N. FLORIDA AVE. STE B, LUTZ, FL 33549

Job	Truss	Truss Type	Qty	Ply	Dwg.#092105566
L130833	T03	COMMON	1	1	Job Reference (optional)

Builders FirstSource, Lake City, Fl 32055

6.200 s Jul 13 2005 MiTek Industries, Inc. Tue Sep 20 17:50:51 2005 Page 1

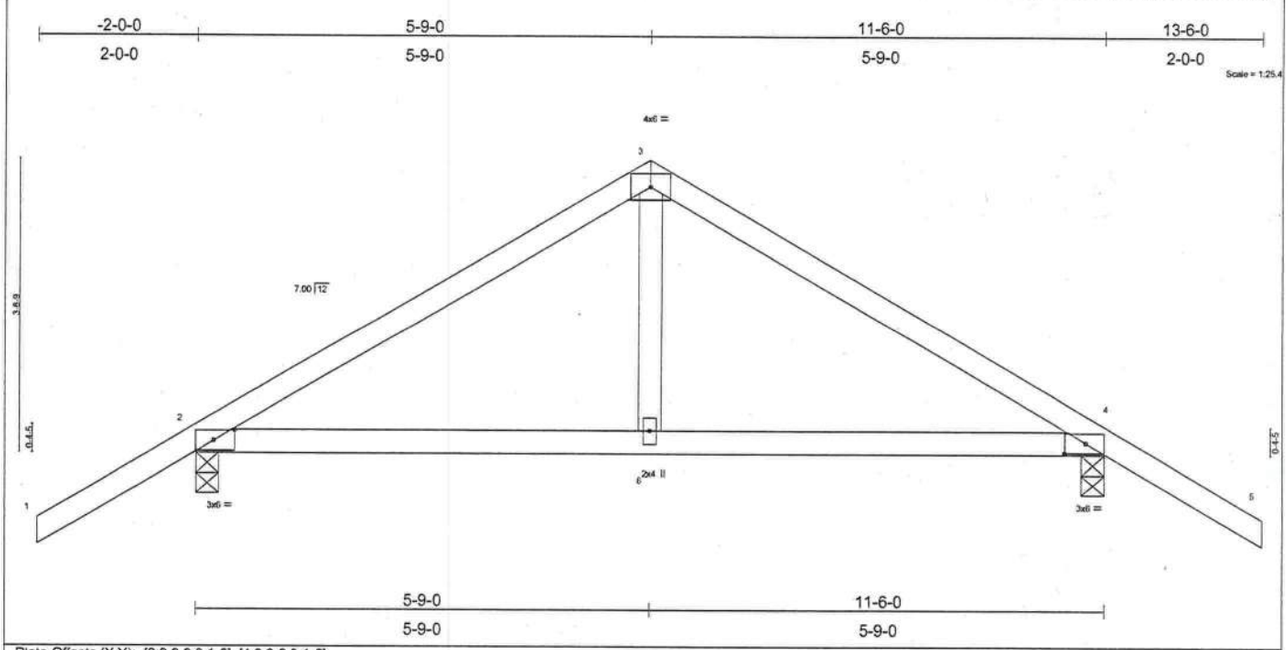

Plate Offsets (X,Y): [2:0-3-3,0-1-8], [4:0-3-3,0-1-8]

LOADING (psf)		SPACING	2-0-0	CSI		DEFL	in	(loc)	l/defl	L/d	PLATES	GRIP
TCLL	20.0	Plates Increase	1.25	TC	0.23	Vert(LL)	-0.03	4-6	>999	240	MT20	244/190
TCDL	7.0	Lumber Increase	1.25	BC	0.18	Vert(TL)	-0.04	4-6	>999	180		
BCLL	10.0	Rep Stress Incr	YES	WB	0.06	Horz(TL)	0.01	4	n/a	n/a		
BCDL	5.0	Code FBC2001/TPI2002		(Matrix)							Weight: 49 lb	

LUMBER
TOP CHORD 2 X 4 SYP No.2D
BOT CHORD 2 X 4 SYP No.2D
WEBS 2 X 4 SYP No.3

BRACING
TOP CHORD Structural wood sheathing directly applied or 6-0-0 oc purlins.
BOT CHORD Rigid ceiling directly applied or 10-0-0 oc bracing.

REACTIONS (lb/size) 2=587/0-3-8, 4=587/0-3-8
Max Horz 2=-124(load case 3)
Max Uplift2=-272(load case 5), 4=-272(load case 6)

FORCES (lb) - Maximum Compression/Maximum Tension
TOP CHORD 1-2=0/54, 2-3=-572/158, 3-4=-572/158, 4-5=0/54
BOT CHORD 2-6=-45/427, 4-6=-45/427
WEBS 3-6=0/192

NOTES
1) Unbalanced roof live loads have been considered for this design.
2) Wind: ASCE 7-98; 110mph (3-second gust); h=20ft; TCDL=4.2psf; BCDL=3.0psf; Category II; Exp B; enclosed; MWFRS gable end zone and C-C Exterior(2) zone; Lumber DOL=1.60 plate grip DOL=1.60. This truss is designed for C-C for members and forces, and for MWFRS for reactions specified.
3) Provide mechanical connection (by others) of truss to bearing plate capable of withstanding 272 lb uplift at joint 2 and 272 lb uplift at joint 4.

LOAD CASE(S) Standard

SEPTEMBER 21, 2005 TRUSS DESIGN ENGINEER:
THOMAS E. MILLER PE 56877, BYRON K. ANDERSON PE 60987
STRUCTURAL ENGINEERING AND INSPECTIONS, INC. EB 9196
16105 N. FLORIDA AVE. STE B, LUTZ, FL 33549

Job	Truss	Truss Type	Qty	Ply	Dwg.#092105567
L130833	T04	SPECIAL	1	1	Job Reference (optional)

Builders FirstSource, Lake City, Fl 32055 — 6.200 s Jul 13 2005 MiTek Industries, Inc. Tue Sep 20 17:50:52 2005 Page 1

-2-0-0	5-3-1	10-0-8	11-3-12	16-9-14	22-7-8	24-7-8
2-0-0	5-3-1	4-9-7	1-3-4	5-6-2	5-9-10	2-0-0

Scale = 1:44.2

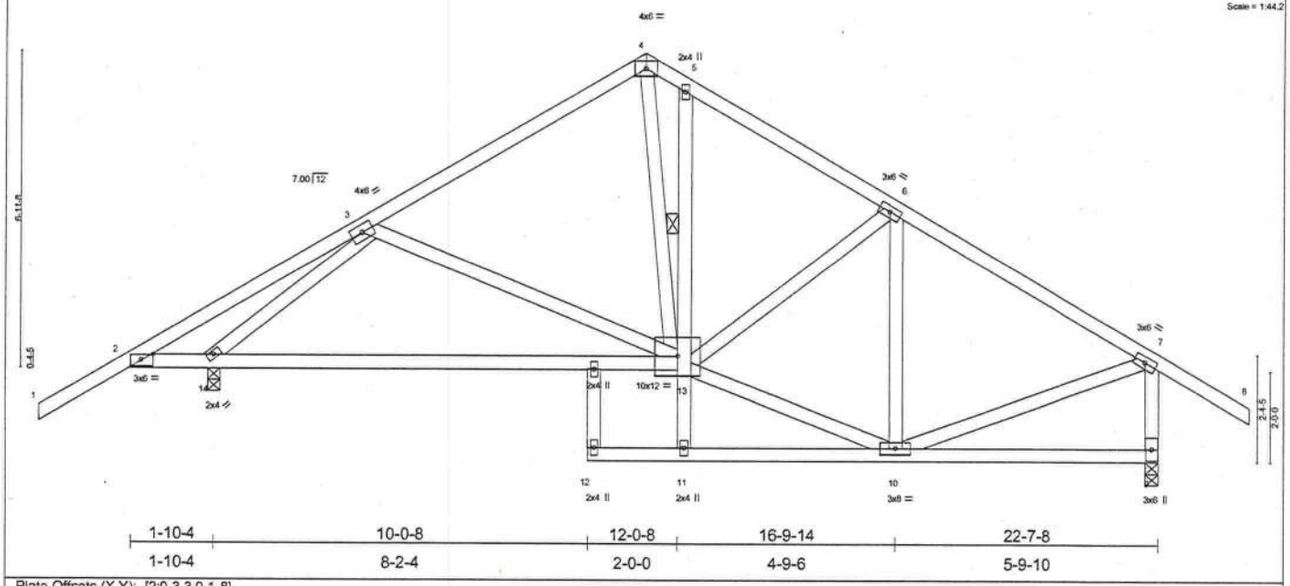

1-10-4	10-0-8	12-0-8	16-9-14	22-7-8
1-10-4	8-2-4	2-0-0	4-9-6	5-9-10

Plate Offsets (X,Y): [2:0-3-3,0-1-8]

LOADING (psf)		SPACING	2-0-0	CSI		DEFL	in	(loc)	l/defl	L/d	PLATES	GRIP
TCLL	20.0	Plates Increase	1.25	TC	0.34	Vert(LL)	0.48	13-14	>522	240	MT20	244/190
TCDL	7.0	Lumber Increase	1.25	BC	0.66	Vert(TL)	0.40	13-14	>630	180		
BCLL	10.0	Rep Stress Incr	YES	WB	0.47	Horz(TL)	0.03	9	n/a	n/a		
BCDL	5.0	Code FBC2001/TPI2002		(Matrix)							Weight: 159 lb	

LUMBER
TOP CHORD 2 X 4 SYP No.2D
BOT CHORD 2 X 4 SYP No.2D *Except*
B3 2 X 4 SYP No.3
WEBS 2 X 4 SYP No.3 *Except*
W9 2 X 4 SYP No.2D

BRACING
TOP CHORD Structural wood sheathing directly applied or 6-0-0 oc purlins, except end verticals.
BOT CHORD Rigid ceiling directly applied or 6-0-0 oc bracing. Except:
1 Row at midpt 5-13

REACTIONS (lb/size) 9=1006/0-3-8, 14=1171/0-3-8
Max Horz 14=281(load case 4)
Max Uplift9=-449(load case 5), 14=-729(load case 5)

FORCES (lb) - Maximum Compression/Maximum Tension
TOP CHORD 1-2=0/53, 2-3=-250/232, 3-4=-928/845, 4-5=-850/939, 5-6=-989/927, 6-7=-882/843, 7-8=0/58, 7-9=-920/832
BOT CHORD 2-14=-141/349, 13-14=-554/760, 11-13=-65/127, 5-13=-148/152, 11-12=0/0, 10-11=-104/190, 9-10=-11/52
WEBS 3-13=-117/161, 6-10=-422/186, 3-14=-1192/861, 7-10=-513/684, 4-13=-651/633, 10-13=-723/862, 6-13=-79/203

NOTES
1) Unbalanced roof live loads have been considered for this design.
2) Wind: ASCE 7-98; 110mph (3-second gust); h=20ft; TCDL=4.2psf; BCDL=3.0psf; Category II; Exp B; enclosed; MWFRS gable end zone and C-C Exterior(2) zone; cantilever left exposed ; end vertical right exposed; porch left exposed; Lumber DOL=1.60 plate grip DOL=1.60. This truss is designed for C-C for members and forces, and for MWFRS for reactions specified.
3) This truss is not designed to support a ceiling and is not intended for use where aesthetics are a consideration.
4) Provide mechanical connection (by others) of truss to bearing plate capable of withstanding 449 lb uplift at joint 9 and 729 lb uplift at joint 14.

LOAD CASE(S) Standard

SEPTEMBER 21, 2005 TRUSS DESIGN ENGINEER:
THOMAS E. MILLER PE 56877, BYRON K. ANDERSON PE 60987
STRUCTURAL ENGINEERING AND INSPECTIONS, INC. EB 9196
16105 N. FLORIDA AVE. STE B, LUTZ, FL 33549

Job	Truss	Truss Type	Qty	Ply	Dwg.#092105568
L130833	T04G	SPECIAL	1	1	Job Reference (optional)

Builders FirstSource, Lake City, Fl 32055

6.200 s Jul 13 2005 MiTek Industries, Inc. Tue Sep 20 17:50:54 2005 Page 1

-2-0-0	5-3-1	10-0-8	11-3-12	16-9-14	22-7-8	24-7-8
2-0-0	5-3-1	4-9-7	1-3-4	5-6-2	5-9-10	2-0-0

Scale = 1:45.0

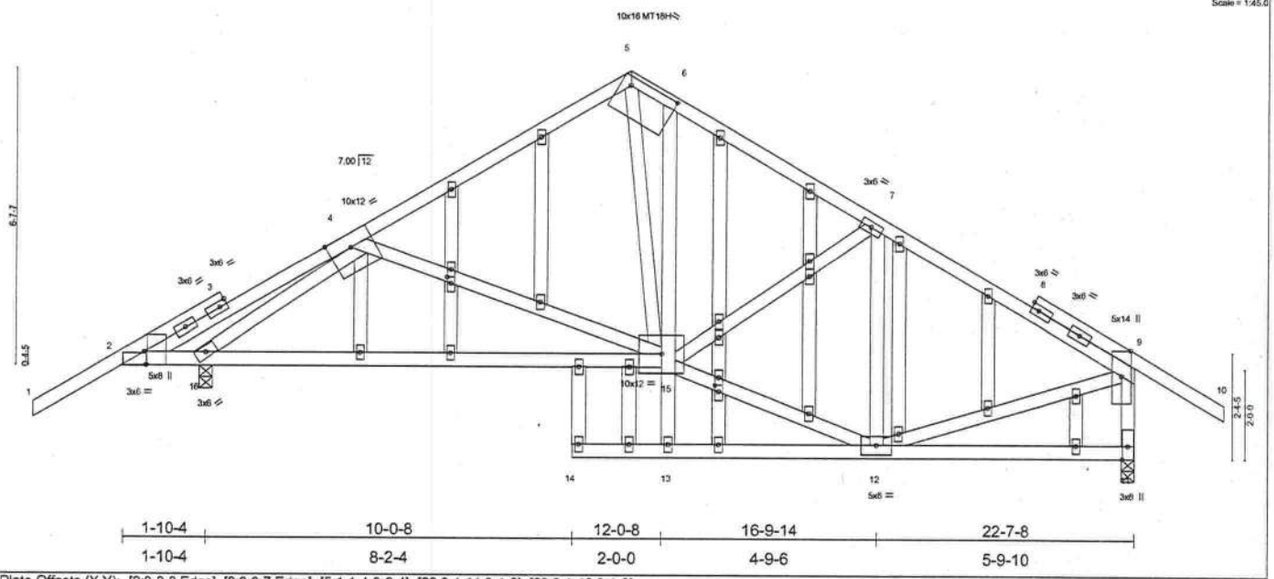

1-10-4	10-0-8	12-0-8	16-9-14	22-7-8
1-10-4	8-2-4	2-0-0	4-9-6	5-9-10

Plate Offsets (X,Y): [2:0-3-8,Edge], [2:0-0-7,Edge], [5:1-1-4,0-2-4], [22:0-1-11,0-1-0], [29:0-1-12,0-1-0]

LOADING (psf)		SPACING	2-0-0	CSI		DEFL	in	(loc)	l/defl	L/d	PLATES	GRIP
TCLL	20.0	Plates Increase	1.25	TC	0.74	Vert(LL)	0.49	15-16	>506	240	MT20	244/190
TCDL	7.0	Lumber Increase	1.25	BC	0.73	Vert(TL)	0.41	15-16	>610	180	MT18H	244/190
BCLL	10.0	Rep Stress Incr	NO	WB	0.90	Horz(TL)	0.05	11	n/a	n/a		
BCDL	5.0	Code FBC2001/TPI2002		(Matrix)							Weight: 209 lb	

LUMBER
TOP CHORD 2 X 4 SYP No.2D
BOT CHORD 2 X 4 SYP No.2D *Except* B3 2 X 4 SYP No.3
WEBS 2 X 4 SYP No.3 *Except* W9 2 X 4 SYP No.2D
OTHERS 2 X 4 SYP No.3

BRACING
TOP CHORD Structural wood sheathing directly applied or 4-2-4 oc purlins, except end verticals.
BOT CHORD Rigid ceiling directly applied or 5-0-3 oc bracing.

REACTIONS (lb/size) 11=1749/0-3-8, 16=2025/0-3-8
Max Horz 16=269(load case 4)
Max Uplift11=-947(load case 5), 16=-1311(load case 5)

FORCES (lb) - Maximum Compression/Maximum Tension
TOP CHORD 1-2=-49/112, 2-3=-509/486, 3-4=-574/725, 4-5=-1633/1504, 5-6=-1413/1486, 6-7=-1730/1626, 7-8=-1424/1415, 8-9=-1569/1477, 9-10=-49/110, 9-11=-1653/1542
BOT CHORD 2-16=-526/611, 15-16=-1353/1456, 13-15=-71/134, 6-15=-164/214, 13-14=0/0, 12-13=-86/220, 11-12=-130/176
WEBS 4-15=-238/235, 7-12=-787/569, 4-16=-2494/2078, 9-12=-928/1115, 5-15=-861/850, 12-15=-1336/1426, 7-15=-86/192

NOTES
1) Unbalanced roof live loads have been considered for this design.
2) Wind: ASCE 7-98; 110mph (3-second gust); h=20ft; TCDL=4.2psf; BCDL=3.0psf; Category II; Exp B; enclosed; MWFRS gable end zone and C-C Exterior(2) zone; cantilever left exposed ; end vertical right exposed; porch left exposed; Lumber DOL=1.60 plate grip DOL=1.60. This truss is designed for C-C for members and forces, and for MWFRS for reactions specified.
3) Truss designed for wind loads in the plane of the truss only. For studs exposed to wind (normal to the face), see MiTek "Standard Gable End Detail"
4) This truss is not designed to support a ceiling and is not intended for use where aesthetics are a consideration.
5) All plates are MT20 plates unless otherwise indicated.
6) All plates are 2x4 MT20 unless otherwise indicated.
7) The following joint(s) require plate inspection per the Tooth Count Method when this truss is chosen for quality assurance inspection: 5.
8) Gable studs spaced at 2-0-0 oc.
9) Provide mechanical connection (by others) of truss to bearing plate capable of withstanding 947 lb uplift at joint 11 and 1311 lb uplift at joint 16.
10) In the LOAD CASE(S) section, loads applied to the face of the truss are noted as front (F) or back (B).

LOAD CASE(S) Standard
1) Regular: Lumber Increase=1.25, Plate Increase=1.25
Uniform Loads (plf)
Vert: 1-5=-114(F=-60), 5-9=-114(F=-60), 9-10=-114(F=-60), 2-15=-30, 13-14=-30, 11-13=-30

SEPTEMBER 21, 2005 TRUSS DESIGN ENGINEER:
THOMAS E. MILLER PE 56877, BYRON K. ANDERSON PE 60987
STRUCTURAL ENGINEERING AND INSPECTIONS, INC. EB 9196
16105 N. FLORIDA AVE. STE B, LUTZ, FL 33549

Job	Truss	Truss Type	Qty	Ply	Dwg.#092105569
L130833	T05	SPECIAL	2	1	Job Reference (optional)

Builders FirstSource, Lake City, Fl 32055

6.200 s Jul 13 2005 MiTek Industries, Inc. Tue Sep 20 17:50:55 2005 Page 1

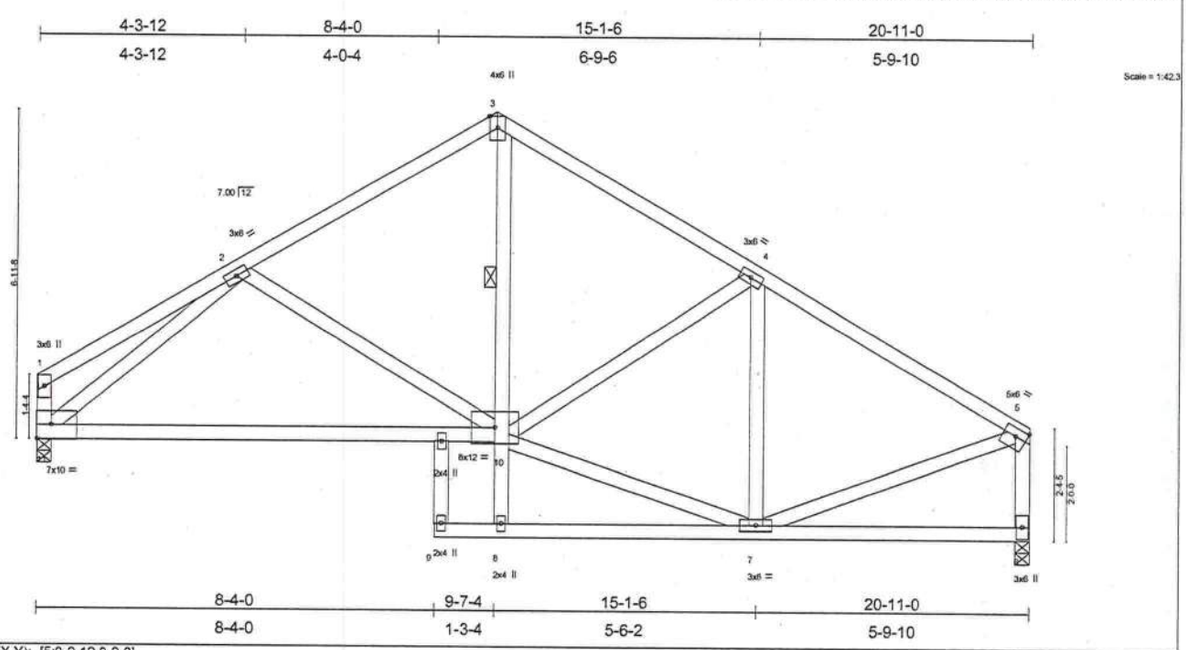

Plate Offsets (X,Y): [5:0-2-12,0-2-0]

LOADING (psf)		SPACING	2-0-0	CSI		DEFL	in	(loc)	l/defl	L/d	PLATES	GRIP
TCLL	20.0	Plates Increase	1.25	TC	0.53	Vert(LL)	0.35	10-11	>710	240	MT20	244/190
TCDL	7.0	Lumber Increase	1.25	BC	0.54	Vert(TL)	0.29	10-11	>855	180		
BCLL	10.0	Rep Stress Incr	YES	WB	0.40	Horz(TL)	0.03	6	n/a	n/a		
BCDL	5.0	Code FBC2001/TPI2002		(Matrix)							Weight: 139 lb	

LUMBER
TOP CHORD 2 X 4 SYP No.2D
BOT CHORD 2 X 4 SYP No.2D *Except*
B3 2 X 4 SYP No.3
WEBS 2 X 4 SYP No.3 *Except*
W1 2 X 4 SYP No.2D, W9 2 X 4 SYP No.2D

BRACING
TOP CHORD Structural wood sheathing directly applied or 6-0-0 oc purlins, except end verticals.
BOT CHORD Rigid ceiling directly applied or 6-0-0 oc bracing. Except:
1 Row at midpt 3-10

REACTIONS (lb/size) 6=885/0-3-8, 11=890/0-3-8
Max Horz 11=243(load case 4)
Max Uplift6=-440(load case 5), 11=-501(load case 5)

FORCES (lb) - Maximum Compression/Maximum Tension
TOP CHORD 1-2=-390/538, 2-3=-934/920, 3-4=-941/920, 4-5=-902/876, 1-11=-278/339, 5-6=-798/732
BOT CHORD 10-11=-599/825, 8-10=-105/118, 3-10=-713/565, 8-9=0/0, 7-8=-58/75, 6-7=-67/98
WEBS 2-10=-137/189, 4-7=-347/153, 2-11=-708/425, 5-7=-559/657, 7-10=-710/813, 4-10=-112/196

NOTES
1) Unbalanced roof live loads have been considered for this design.
2) Wind: ASCE 7-98; 110mph (3-second gust); h=20ft; TCDL=4.2psf; BCDL=3.0psf; Category II; Exp B; enclosed; MWFRS gable end zone and C-C Exterior(2) zone; end vertical right exposed; porch left exposed; Lumber DOL=1.60 plate grip DOL=1.60. This truss is designed for C-C for members and forces, and for MWFRS for reactions specified.
3) Provide mechanical connection (by others) of truss to bearing plate capable of withstanding 440 lb uplift at joint 6 and 501 lb uplift at joint 11.

LOAD CASE(S) Standard

SEPTEMBER 21, 2005 TRUSS DESIGN ENGINEER:
THOMAS E. MILLER PE 56877, BYRON K. ANDERSON PE 60987
STRUCTURAL ENGINEERING AND INSPECTIONS, INC. EB 9196
16105 N. FLORIDA AVE. STE B, LUTZ, FL 33549

Job	Truss	Truss Type	Qty	Ply	Dwg.#092105570
L130833	T06	COMMON	1	2	Job Reference (optional)

Builders FirstSource, Lake City, Fl 32055

6.200 s Jul 13 2005 MiTek Industries, Inc. Tue Sep 20 17:50:56 2005 Page 1

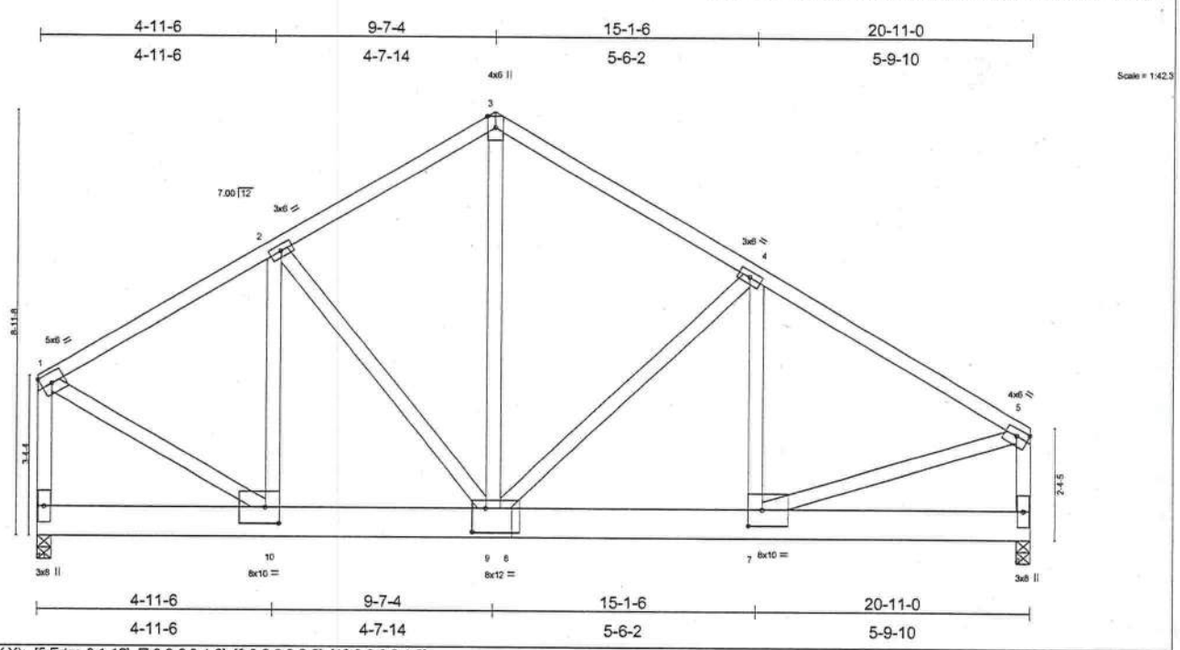

Plate Offsets (X,Y): [5:Edge,0-1-12], [7:0-3-8,0-4-0], [8:0-3-8,0-6-0], [10:0-3-8,0-4-0]

LOADING (psf)		SPACING	2-0-0	CSI		DEFL	in	(loc)	l/defl	L/d	PLATES	GRIP
TCLL	20.0	Plates Increase	1.25	TC	0.63	Vert(LL)	-0.09	7-9	>999	240	MT20	244/190
TCDL	7.0	Lumber Increase	1.25	BC	0.26	Vert(TL)	-0.15	7-9	>999	180		
BCLL	10.0	Rep Stress Incr	NO	WB	0.82	Horz(TL)	0.02	6	n/a	n/a		
BCDL	5.0	Code FBC2001/TPI2002		(Matrix)							Weight: 343 lb	

LUMBER
TOP CHORD 2 X 4 SYP No.2D
BOT CHORD 2 X 8 SYP 2400F 2.0E
WEBS 2 X 4 SYP No.3 *Except*
W1 2 X 4 SYP No.2D, W9 2 X 4 SYP No.2D

BRACING
TOP CHORD Structural wood sheathing directly applied or 5-4-9 oc purlins, except end verticals.
BOT CHORD Rigid ceiling directly applied or 10-0-0 oc bracing.

REACTIONS (lb/size) 11=6434/0-3-8, 6=6434/0-3-8
Max Horz 11=-222(load case 2)
Max Uplift11=-2419(load case 4), 6=-2428(load case 5)

FORCES (lb) - Maximum Compression/Maximum Tension
TOP CHORD 1-2=-5000/1890, 2-3=-4713/1876, 3-4=-4743/1866, 4-5=-6174/2328, 1-11=-5159/1952, 5-6=-4927/1876
BOT CHORD 10-11=-263/178, 9-10=-1640/4247, 8-9=-1929/5251, 7-8=-1929/5251, 6-7=-211/451
WEBS 2-10=-146/295, 2-9=-395/262, 3-9=-1708/4382, 4-9=-1711/781, 4-7=-636/1702, 1-10=-1775/4785, 5-7=-1857/5084

NOTES
1) 2-ply truss to be connected together with 0.131"x3" Nails as follows:
Top chords connected as follows: 2 X 4 - 1 row at 0-9-0 oc.
Bottom chords connected as follows: 2 X 8 - 2 rows at 0-7-0 oc.
Webs connected as follows: 2 X 4 - 1 row at 0-9-0 oc.
2) All loads are considered equally applied to all plies, except if noted as front (F) or back (B) face in the LOAD CASE(S) section. Ply to ply connections have been provided to distribute only loads noted as (F) or (B), unless otherwise indicated.
3) Unbalanced roof live loads have been considered for this design.
4) Wind: ASCE 7-98; 110mph (3-second gust); h=20ft; TCDL=4.2psf; BCDL=3.0psf; Category II; Exp B; enclosed; MWFRS gable end zone; Lumber DOL=1.60 plate grip DOL=1.60.
5) Provide mechanical connection (by others) of truss to bearing plate capable of withstanding 2419 lb uplift at joint 11 and 2428 lb uplift at joint 6.
6) Girder carries tie-in span(s): 28-0-0 from 0-0-0 to 20-11-0

LOAD CASE(S) Standard
1) Regular: Lumber Increase=1.25, Plate Increase=1.25
Uniform Loads (plf)
Vert: 1-3=-54, 3-5=-54, 6-11=-570(F=-540)

SEPTEMBER 21, 2005 TRUSS DESIGN ENGINEER:
THOMAS E. MILLER PE 56877, BYRON K. ANDERSON PE 60987
STRUCTURAL ENGINEERING AND INSPECTIONS, INC. EB 9196
16105 N. FLORIDA AVE. STE B, LUTZ, FL 33549

Job	Truss	Truss Type	Qty	Ply	Dwg.#09210557 1
L130833	T07	MONO HIP	1	1	Job Reference (optional)

Builders FirstSource, Lake City, Fl 32055

6.200 s Jul 13 2005 MiTek Industries, Inc. Tue Sep 20 17:50:57 2005 Page 1

-2-0-0	7-0-0	11-11-8	16-9-4	21-7-0	26-6-8
2-0-0	7-0-0	4-11-8	4-9-12	4-9-12	4-11-8

Scale: 1/4"=1'

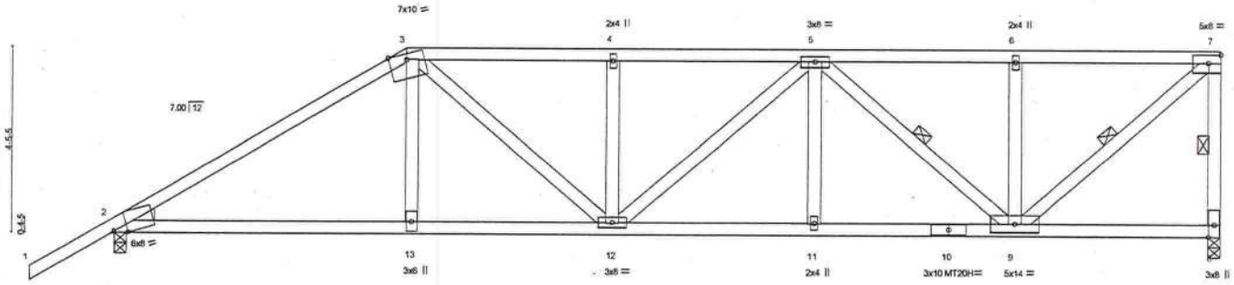

7-0-0	11-11-8	16-9-4	21-7-0	26-6-8
7-0-0	4-11-8	4-9-12	4-9-12	4-11-8

Plate Offsets (X,Y): [2:0-3-15,Edge]

LOADING (psf)		SPACING	2-0-0	CSI		DEFL	in	(loc)	l/defl	L/d	PLATES	GRIP
TCLL	20.0	Plates Increase	1.25	TC	0.73	Vert(LL)	-0.22	11-12	>999	240	MT20	244/190
TCDL	7.0	Lumber Increase	1.25	BC	0.79	Vert(TL)	-0.36	11-12	>886	180	MT20H	187/143
BCLL	10.0	Rep Stress Incr	NO	WB	0.99	Horz(TL)	0.11	8	n/a	n/a		
BCDL	5.0	Code FBC2001/TPI2002		(Matrix)							Weight: 149 lb	

LUMBER
TOP CHORD 2 X 4 SYP No.2D
BOT CHORD 2 X 4 SYP No.2D
WEBS 2 X 4 SYP No.3
WEDGE
Left: 2 X 4 SYP No.3

BRACING
TOP CHORD Structural wood sheathing directly applied or 2-11-8 oc purlins, except end verticals.
BOT CHORD Rigid ceiling directly applied or 4-5-15 oc bracing.
WEBS 1 Row at midpt 7-8, 5-9, 7-9

REACTIONS (lb/size) 8=2449/0-3-8, 2=2323/0-3-8
Max Horz 2=265(load case 4)
Max Uplift8=-1408(load case 2), 2=-1152(load case 4)

FORCES (lb) - Maximum Compression/Maximum Tension
TOP CHORD 1-2=0/54, 2-3=-3863/2000, 3-4=-4004/2235, 4-5=-4004/2236, 5-6=-2410/1378, 6-7=-2410/1378, 7-8=-2287/1420
BOT CHORD 2-13=-1760/3234, 12-13=-1772/3263, 11-12=-2097/3716, 10-11=-2097/3716, 9-10=-2097/3716, 8-9=-41/70
WEBS 3-13=-323/822, 3-12=-747/965, 4-12=-558/653, 5-12=-233/380, 5-11=0/316, 5-9=-1725/950, 6-9=-583/620, 7-9=-1765/3089

NOTES
1) Wind: ASCE 7-98; 110mph (3-second gust); h=20ft; TCDL=4.2psf; BCDL=3.0psf; Category II; Exp B; enclosed; MWFRS gable end zone; Lumber DOL=1.60 plate grip DOL=1.60.
2) Provide adequate drainage to prevent water ponding.
3) All plates are MT20 plates unless otherwise indicated.
4) Provide mechanical connection (by others) of truss to bearing plate capable of withstanding 1408 lb uplift at joint 8 and 1152 lb uplift at joint 2.
5) Girder carries hip end with 0-0-0 right side setback, 7-0-0 left side setback, and 7-0-0 end setback.
6) Hanger(s) or other connection device(s) shall be provided sufficient to support concentrated load(s) 539 lb down and 374 lb up at 7-0-0 on bottom chord. The design/selection of such connection device(s) is the responsibility of others.
7) In the LOAD CASE(S) section, loads applied to the face of the truss are noted as front (F) or back (B).

LOAD CASE(S) Standard
1) Regular: Lumber Increase=1.25, Plate Increase=1.25
Uniform Loads (plf)
Vert: 1-3=-54, 3-7=-118(F=-64), 2-13=-30, 8-13=-65(F=-35)
Concentrated Loads (lb)
Vert: 13=-539(F)

SEPTEMBER 21, 2005 TRUSS DESIGN ENGINEER:
THOMAS E. MILLER PE 56877, BYRON K. ANDERSON PE 60987
STRUCTURAL ENGINEERING AND INSPECTIONS, INC. EB 9196
16105 N. FLORIDA AVE. STE B, LUTZ, FL 33549

Job	Truss	Truss Type	Qty	Ply	Dwg.#092105572
L130833	T08	MONO HIP	1	1	Job Reference (optional)

Builders FirstSource, Lake City, Fl 32055

6.200 s Jul 13 2005 MiTek Industries, Inc. Tue Sep 20 17:50:57 2005 Page 1

-2-0-0	4-8-13	9-0-0	14-9-0	20-6-0	26-6-8
2-0-0	4-8-13	4-3-3	5-9-0	5-9-0	6-0-8

Scale: 1/4"=1'

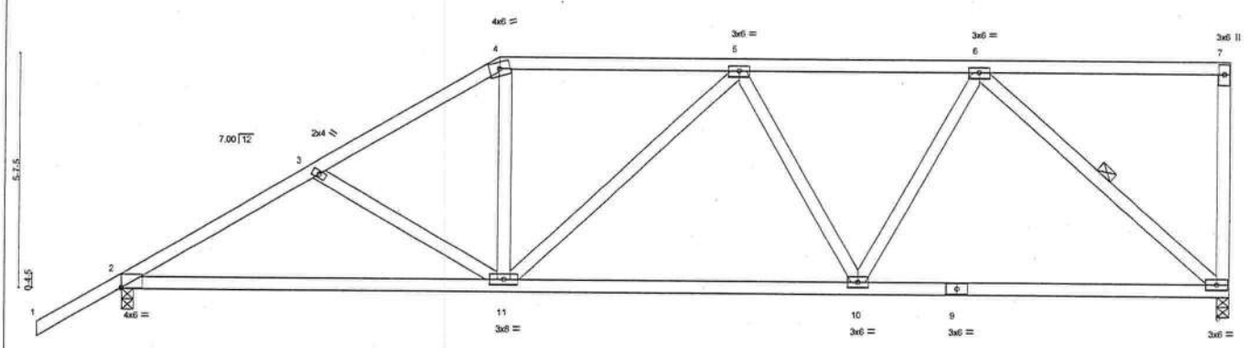

9-0-0	17-7-8	26-6-8
9-0-0	8-7-8	8-11-0

Plate Offsets (X,Y): [2:Edge,0-0-2]

LOADING (psf)		SPACING	2-0-0	CSI		DEFL	in	(loc)	l/defl	L/d	PLATES	GRIP
TCLL	20.0	Plates Increase	1.25	TC	0.53	Vert(LL)	-0.14	2-11	>999	240	MT20	244/190
TCDL	7.0	Lumber Increase	1.25	BC	0.46	Vert(TL)	-0.25	2-11	>999	180		
BCLL	10.0	Rep Stress Incr	YES	WB	0.39	Horz(TL)	0.05	8	n/a	n/a		
BCDL	5.0	Code FBC2001/TPI2002		(Matrix)							Weight: 147 lb	

LUMBER
TOP CHORD 2 X 4 SYP No.2D
BOT CHORD 2 X 4 SYP No.2D
WEBS 2 X 4 SYP No.3

BRACING
TOP CHORD Structural wood sheathing directly applied or 4-8-12 oc purlins, except end verticals.
BOT CHORD Rigid ceiling directly applied or 7-11-1 oc bracing.
WEBS 1 Row at midpt 6-8

REACTIONS (lb/size) 8=1098/0-3-8, 2=1223/0-3-8
Max Horz 2=317(load case 5)
Max Uplift8=-433(load case 3), 2=-404(load case 5)

FORCES (lb) - Maximum Compression/Maximum Tension
TOP CHORD 1-2=0/54, 2-3=-1726/602, 3-4=-1513/542, 4-5=-1269/524, 5-6=-1225/474, 6-7=-48/10, 7-8=-152/121
BOT CHORD 2-11=-664/1439, 10-11=-569/1351, 9-10=-410/957, 8-9=-410/957
WEBS 3-11=-212/202, 4-11=-68/456, 5-11=-113/242, 5-10=-265/198, 6-10=-136/564, 6-8=-1224/541

NOTES
1) Wind: ASCE 7-98; 110mph (3-second gust); h=20ft; TCDL=4.2psf; BCDL=3.0psf; Category II; Exp B; enclosed; MWFRS gable end zone and C-C Exterior(2) zone; Lumber DOL=1.60 plate grip DOL=1.60. This truss is designed for C-C for members and forces, and for MWFRS for reactions specified.
2) Provide adequate drainage to prevent water ponding.
3) Provide mechanical connection (by others) of truss to bearing plate capable of withstanding 433 lb uplift at joint 8 and 404 lb uplift at joint 2.

LOAD CASE(S) Standard

SEPTEMBER 21, 2005 TRUSS DESIGN ENGINEER:
THOMAS E. MILLER PE 56877, BYRON K. ANDERSON PE 60987
STRUCTURAL ENGINEERING AND INSPECTIONS, INC. EB 9196
16105 N. FLORIDA AVE. STE B, LUTZ, FL 33549

Job	Truss	Truss Type	Qty	Ply	Dwg.#092105573
L130833	T09	MONO HIP	1	1	Job Reference (optional)

Builders FirstSource, Lake City, Fl 32055

6.200 s Jul 13 2005 MiTek Industries, Inc. Tue Sep 20 17:50:58 2005 Page 1

-2-0-0	5-8-13	11-0-0	18-9-4	26-6-8
2-0-0	5-8-13	5-3-3	7-9-4	7-9-4

Scale: 1/4"=1'

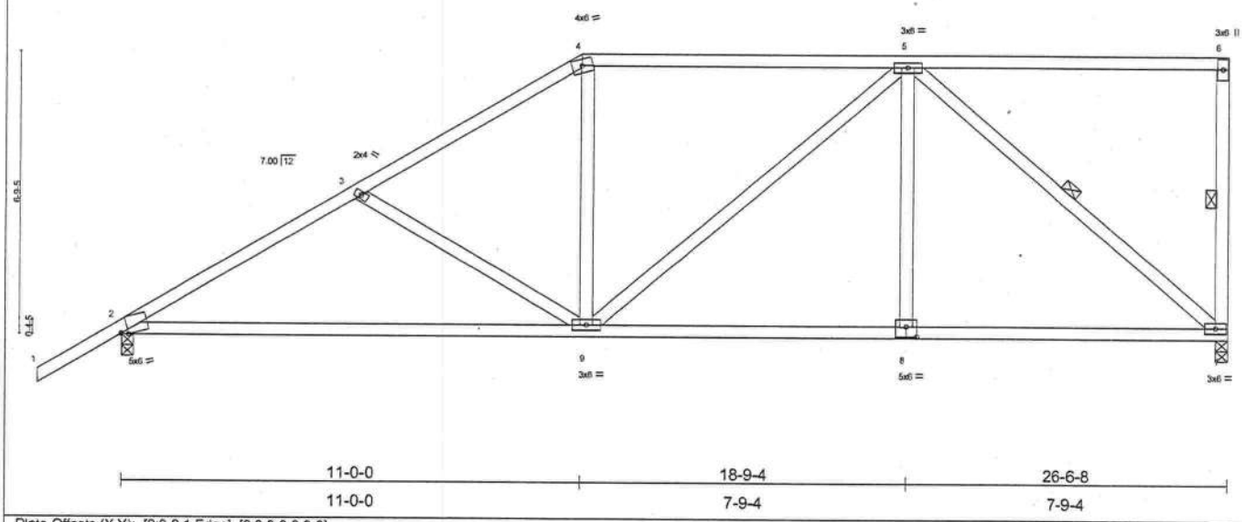

11-0-0	18-9-4	26-6-8
11-0-0	7-9-4	7-9-4

Plate Offsets (X,Y): [2:0-2-1,Edge], [8:0-3-0,0-3-0]

LOADING (psf)		SPACING	2-0-0	CSI		DEFL	in	(loc)	l/defl	L/d	PLATES	GRIP
TCLL	20.0	Plates Increase	1.25	TC	0.57	Vert(LL)	-0.31	2-9	>999	240	MT20	244/190
TCDL	7.0	Lumber Increase	1.25	BC	0.60	Vert(TL)	-0.53	2-9	>589	180		
BCLL	10.0	Rep Stress Incr	YES	WB	0.58	Horz(TL)	0.05	7	n/a	n/a		
BCDL	5.0	Code FBC2001/TPI2002		(Matrix)							Weight: 151 lb	

LUMBER
TOP CHORD 2 X 4 SYP No.2D
BOT CHORD 2 X 4 SYP No.2D
WEBS 2 X 4 SYP No.3

BRACING
TOP CHORD Structural wood sheathing directly applied or 4-6-6 oc purlins, except end verticals.
BOT CHORD Rigid ceiling directly applied or 7-10-4 oc bracing.
WEBS 1 Row at midpt 6-7, 5-7

REACTIONS (lb/size) 7=1098/0-3-8, 2=1223/0-3-8
Max Horz 2=371(load case 5)
Max Uplift7=-391(load case 4), 2=-416(load case 5)

FORCES (lb) - Maximum Compression/Maximum Tension
TOP CHORD 1-2=0/54, 2-3=-1665/570, 3-4=-1388/486, 4-5=-1144/485, 5-6=-42/17, 6-7=-186/150
BOT CHORD 2-9=-678/1390, 8-9=-412/979, 7-8=-412/979
WEBS 3-9=-294/266, 4-9=0/316, 5-9=-143/216, 5-8=0/207, 5-7=-1230/520

NOTES
1) Wind: ASCE 7-98; 110mph (3-second gust); h=20ft; TCDL=4.2psf; BCDL=3.0psf; Category II; Exp B; enclosed; MWFRS gable end zone and C-C Exterior(2) zone; Lumber DOL=1.60 plate grip DOL=1.60. This truss is designed for C-C for members and forces, and for MWFRS for reactions specified.
2) Provide adequate drainage to prevent water ponding.
3) Provide mechanical connection (by others) of truss to bearing plate capable of withstanding 391 lb uplift at joint 7 and 416 lb uplift at joint 2.

LOAD CASE(S) Standard

SEPTEMBER 21, 2005 TRUSS DESIGN ENGINEER:
THOMAS E. MILLER PE 56877, BYRON K. ANDERSON PE 60987
STRUCTURAL ENGINEERING AND INSPECTIONS, INC. EB 9196
16105 N. FLORIDA AVE. STE B, LUTZ, FL 33549

Job	Truss	Truss Type	Qty	Ply	Dwg.#092105574
L130833	T10	HIP	1	1	Job Reference (optional)

Builders FirstSource, Lake City, Fl 32055

6.200 s Jul 13 2005 MiTek Industries, Inc. Tue Sep 20 17:50:59 2005 Page 1

8-0-0	14-4-8	20-9-0	22-6-0
8-0-0	6-4-8	6-4-8	1-9-0

Scale = 1:38.1

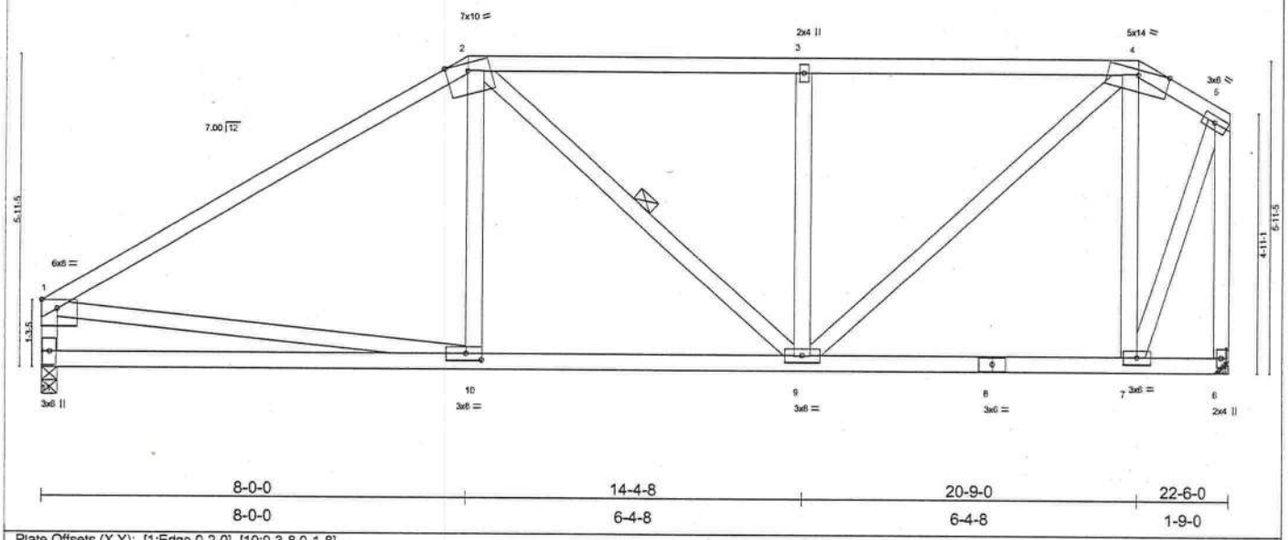

8-0-0	14-4-8	20-9-0	22-6-0
8-0-0	6-4-8	6-4-8	1-9-0

Plate Offsets (X,Y): [1:Edge,0-2-0], [10:0-3-8,0-1-8]

LOADING (psf)		SPACING	2-0-0	CSI		DEFL	in	(loc)	l/defl	L/d	PLATES	GRIP
TCLL	20.0	Plates Increase	1.25	TC	0.47	Vert(LL)	-0.07	10-11	>999	240	MT20	244/190
TCDL	7.0	Lumber Increase	1.25	BC	0.29	Vert(TL)	-0.12	10-11	>999	180		
BCLL	10.0	Rep Stress Incr	YES	WB	0.46	Horz(TL)	0.02	6	n/a	n/a		
BCDL	5.0	Code FBC2001/TPI2002		(Matrix)							Weight: 144 lb	

LUMBER
TOP CHORD 2 X 4 SYP No.2D
BOT CHORD 2 X 4 SYP No.2D
WEBS 2 X 4 SYP No.3 *Except*
W1 2 X 4 SYP No.2D, W6 2 X 4 SYP No.2D

BRACING
TOP CHORD Structural wood sheathing directly applied or 5-8-1 oc purlins, except end verticals.
BOT CHORD Rigid ceiling directly applied or 10-0-0 oc bracing.
WEBS 1 Row at midpt 2-9

REACTIONS (lb/size) 11=933/0-3-8, 6=933/Mechanical
Max Horz 11=187(load case 5)
Max Uplift11=-265(load case 4), 6=-342(load case 4)

FORCES (lb) - Maximum Compression/Maximum Tension
TOP CHORD 1-2=-1155/410, 2-3=-890/406, 3-4=-890/405, 4-5=-328/134, 1-11=-806/343, 5-6=-940/363
BOT CHORD 10-11=-424/434, 9-10=-395/906, 8-9=-119/287, 7-8=-119/287, 6-7=-2/5
WEBS 2-10=0/152, 2-9=-181/117, 3-9=-368/334, 4-9=-378/810, 4-7=-649/381, 1-10=-330/526, 5-7=-367/853

NOTES
1) Unbalanced roof live loads have been considered for this design.
2) Wind: ASCE 7-98; 110mph (3-second gust); h=20ft; TCDL=4.2psf; BCDL=3.0psf; Category II; Exp B; enclosed; MWFRS gable end zone and C-C Exterior(2) zone; Lumber DOL=1.60 plate grip DOL=1.60. This truss is designed for C-C for members and forces, and for MWFRS for reactions specified.
3) Provide adequate drainage to prevent water ponding.
4) Refer to girder(s) for truss to truss connections.
5) Provide mechanical connection (by others) of truss to bearing plate capable of withstanding 265 lb uplift at joint 11 and 342 lb uplift at joint 6.

LOAD CASE(S) Standard

SEPTEMBER 21, 2005 TRUSS DESIGN ENGINEER:
THOMAS E. MILLER PE 56877, BYRON K. ANDERSON PE 60987
STRUCTURAL ENGINEERING AND INSPECTIONS, INC. EB 9196
16105 N. FLORIDA AVE. STE B, LUTZ, FL 33549

Job	Truss	Truss Type	Qty	Ply	Dwg.#092105575
L130833	T11	HIP	1	1	Job Reference (optional)

Builders FirstSource, Lake City, Fl 32055 — 6.200 s Jul 13 2005 MiTek Industries, Inc. Tue Sep 20 17:51:00 2005 Page 1

5-1-12	10-0-0	14-4-8	18-9-0	22-6-0
5-1-12	4-10-4	4-4-8	4-4-8	3-9-0

Scale = 1:38.1

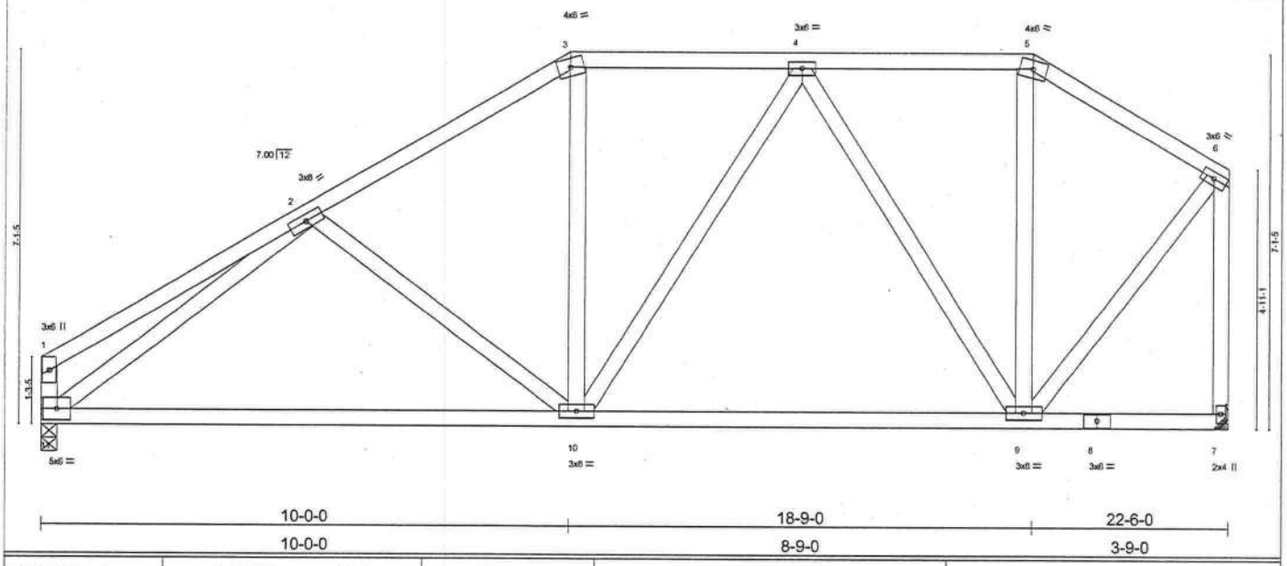

10-0-0	18-9-0	22-6-0
10-0-0	8-9-0	3-9-0

LOADING (psf)		SPACING	2-0-0	CSI		DEFL	in	(loc)	l/defl	L/d	PLATES	GRIP
TCLL	20.0	Plates Increase	1.25	TC	0.41	Vert(LL)	-0.14	10-11	>999	240	MT20	244/190
TCDL	7.0	Lumber Increase	1.25	BC	0.44	Vert(TL)	-0.24	10-11	>999	180		
BCLL	10.0	Rep Stress Incr	YES	WB	0.55	Horz(TL)	0.02	7	n/a	n/a		
BCDL	5.0	Code FBC2001/TPI2002		(Matrix)							Weight: 147 lb	

LUMBER
TOP CHORD 2 X 4 SYP No.2D
BOT CHORD 2 X 4 SYP No.2D
WEBS 2 X 4 SYP No.3 *Except*
W1 2 X 4 SYP No.2D, W7 2 X 4 SYP No.2D

BRACING
TOP CHORD Structural wood sheathing directly applied or 6-0-0 oc purlins, except end verticals.
BOT CHORD Rigid ceiling directly applied or 9-7-12 oc bracing.

REACTIONS (lb/size) 11=933/0-3-8, 7=933/Mechanical
Max Horz 11=210(load case 5)
Max Uplift11=-251(load case 5), 7=-232(load case 4)

FORCES (lb) - Maximum Compression/Maximum Tension
TOP CHORD 1-2=-478/130, 2-3=-989/397, 3-4=-800/397, 4-5=-454/253, 5-6=-567/243, 1-11=-343/147, 6-7=-904/366
BOT CHORD 10-11=-453/902, 9-10=-291/697, 8-9=-9/9, 7-8=-9/9
WEBS 2-10=-137/228, 3-10=-17/213, 4-10=-101/206, 4-9=-483/274, 5-9=-5/92, 2-11=-702/321, 6-9=-246/711

NOTES
1) Unbalanced roof live loads have been considered for this design.
2) Wind: ASCE 7-98; 110mph (3-second gust); h=20ft; TCDL=4.2psf; BCDL=3.0psf; Category II; Exp B; enclosed; MWFRS gable end zone and C-C Exterior(2) zone; Lumber DOL=1.60 plate grip DOL=1.60. This truss is designed for C-C for members and forces, and for MWFRS for reactions specified.
3) Provide adequate drainage to prevent water ponding.
4) Refer to girder(s) for truss to truss connections.
5) Provide mechanical connection (by others) of truss to bearing plate capable of withstanding 251 lb uplift at joint 11 and 232 lb uplift at joint 7.

LOAD CASE(S) Standard

SEPTEMBER 21, 2005 TRUSS DESIGN ENGINEER:
THOMAS E. MILLER PE 56877, BYRON K. ANDERSON PE 60987
STRUCTURAL ENGINEERING AND INSPECTIONS, INC. EB 9196
16105 N. FLORIDA AVE. STE B, LUTZ, FL 33549

Job	Truss	Truss Type	Qty	Ply	Dwg.#092105576
L130833	T12	SPECIAL	1	1	Job Reference (optional)

Builders FirstSource, Lake City, Fl 32055

6.200 s Jul 13 2005 MiTek Industries, Inc. Tue Sep 20 17:51:00 2005 Page 1

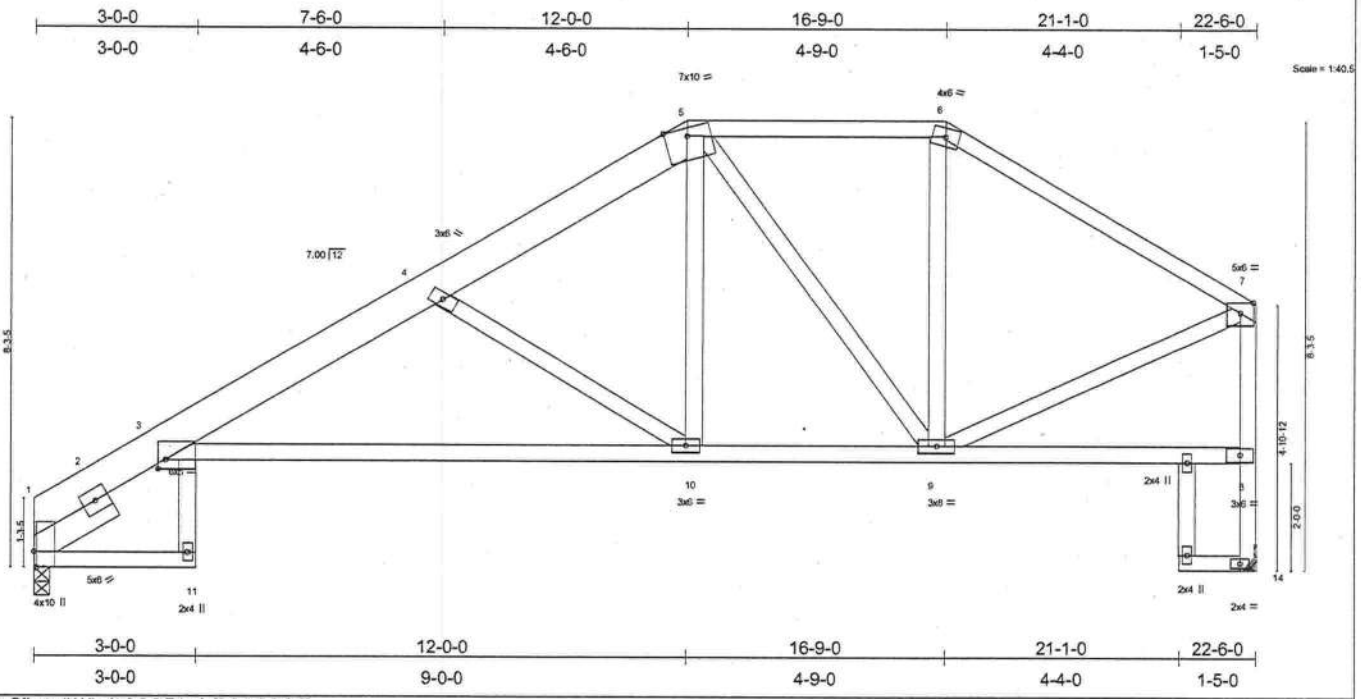

Plate Offsets (X,Y): [1:0-3-8,Edge], [3:0-1-8,0-2-0]

LOADING (psf)		SPACING	2-0-0	CSI		DEFL	in	(loc)	l/defl	L/d	PLATES	GRIP
TCLL	20.0	Plates Increase	1.25	TC	0.59	Vert(LL)	-0.35	3-10	>760	240	MT20	244/190
TCDL	7.0	Lumber Increase	1.25	BC	0.51	Vert(TL)	-0.58	3-10	>459	180		
BCLL	10.0	Rep Stress Incr	YES	WB	0.46	Horz(TL)	0.33	14	n/a	n/a		
BCDL	5.0	Code FBC2001/TPI2002		(Matrix)							Weight: 157 lb	

LUMBER

TOP CHORD 2 X 4 SYP No.2D *Except*
T1 2 X 8 SYP 2400F 2.0E
BOT CHORD 2 X 4 SYP No.2D *Except*
B3 2 X 4 SYP No.3, B3 2 X 4 SYP No.3
WEBS 2 X 4 SYP No.3 *Except*
W5 2 X 4 SYP No.2D
SLIDER Left 2 X 6 SYP No.1D 1-8-10

BRACING

TOP CHORD Structural wood sheathing directly applied or 6-0-0 oc purlins, except end verticals.
BOT CHORD Rigid ceiling directly applied or 10-0-0 oc bracing, Except:
6-11-8 oc bracing: 3-10.

REACTIONS (lb/size) 1=954/0-3-8, 14=941/Mechanical
Max Horz 1=282(load case 5)
Max Uplift1=-296(load case 5), 14=-298(load case 5)

FORCES (lb) - Maximum Compression/Maximum Tension
TOP CHORD 1-2=-662/131, 2-3=-290/108, 3-4=-1713/700, 4-5=-1191/495, 5-6=-700/380, 6-7=-880/370, 8-14=-941/358, 7-8=-842/370
BOT CHORD 1-11=0/0, 3-10=-820/1649, 9-10=-364/940, 8-9=-44/84
WEBS 4-10=-848/540, 5-10=-249/700, 5-9=-451/203, 6-9=-50/198, 7-9=-243/677

NOTES

1) Unbalanced roof live loads have been considered for this design.
2) Wind: ASCE 7-98; 110mph (3-second gust); h=20ft; TCDL=4.2psf; BCDL=3.0psf; Category II; Exp B; enclosed; MWFRS gable end zone and C-C Exterior(2) zone; Lumber DOL=1.60 plate grip DOL=1.60. This truss is designed for C-C for members and forces, and for MWFRS for reactions specified.
3) Provide adequate drainage to prevent water ponding.
4) Refer to girder(s) for truss to truss connections.
5) Provide mechanical connection (by others) of truss to bearing plate capable of withstanding 296 lb uplift at joint 1 and 298 lb uplift at joint 14.

LOAD CASE(S) Standard

SEPTEMBER 21, 2005 TRUSS DESIGN ENGINEER:
THOMAS E. MILLER PE 56877, BYRON K. ANDERSON PE 60987
STRUCTURAL ENGINEERING AND INSPECTIONS, INC. EB 9196
16105 N. FLORIDA AVE. STE B, LUTZ, FL 33549

Job	Truss	Truss Type	Qty	Ply	
L130833	T13	SPECIAL	1	1	Job Reference (optional)

Dwg.#092105577

Builders FirstSource, Lake City, Fl 32055

6.200 s Jul 13 2005 MiTek Industries, Inc. Tue Sep 20 17:51:03 2005 Page 1

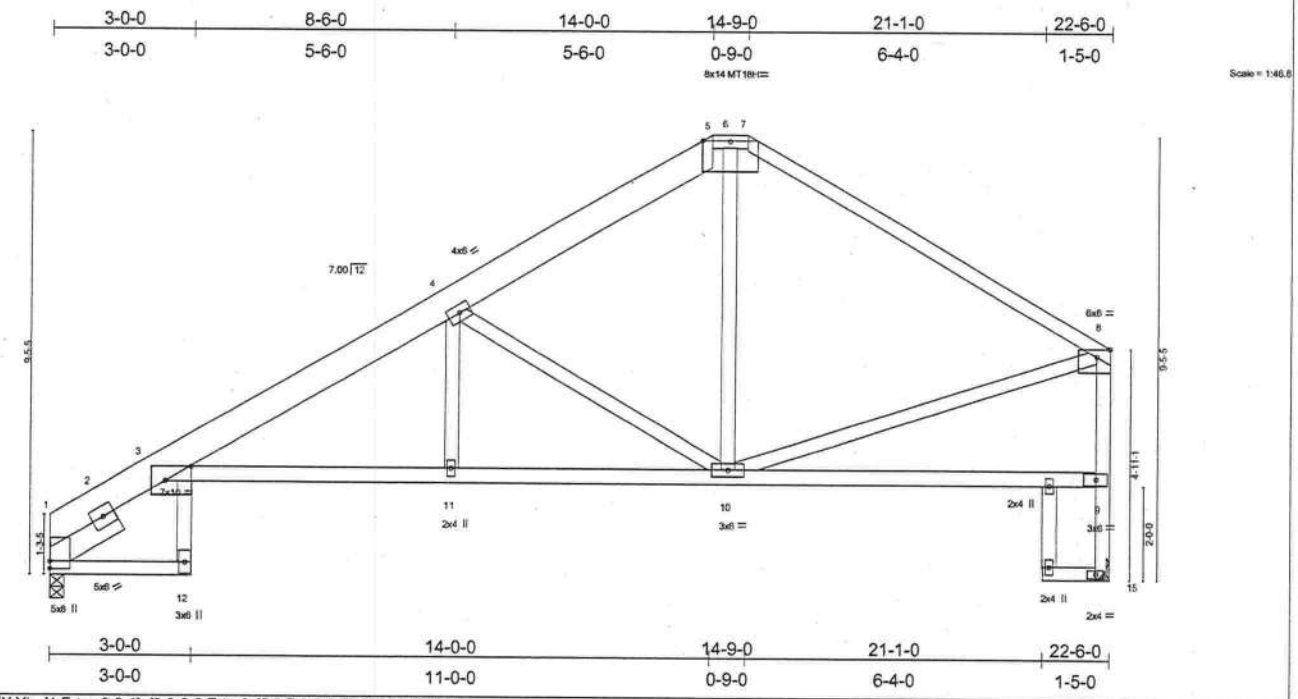

Plate Offsets (X,Y): [1:Edge,0-0-1], [3:0-6-8,Edge], [5:0-7-0,0-0-5], [8:0-3-8,Edge]

LOADING (psf)		SPACING	2-0-0	CSI		DEFL	in	(loc)	l/defl	L/d	PLATES	GRIP
TCLL	20.0	Plates Increase	1.25	TC	0.49	Vert(LL)	-0.24	3-11	>999	240	MT20	244/190
TCDL	7.0	Lumber Increase	1.25	BC	0.72	Vert(TL)	-0.39	3-11	>684	180	MT18H	244/190
BCLL	10.0	Rep Stress Incr	YES	WB	0.78	Horz(TL)	0.35	15	n/a	n/a		
BCDL	5.0	Code FBC2001/TPI2002		(Matrix)							Weight: 154 lb	

LUMBER

TOP CHORD 2 X 4 SYP No.2D *Except*
T1 2 X 8 SYP 2400F 2.0E
BOT CHORD 2 X 4 SYP No.2D *Except*
B3 2 X 4 SYP No.3, B3 2 X 4 SYP No.3
WEBS 2 X 4 SYP No.3 *Except*
W5 2 X 4 SYP No.2D
SLIDER Left 2 X 6 SYP No.1D 1-8-10

BRACING

TOP CHORD Structural wood sheathing directly applied or 6-0-0 oc purlins, except end verticals.
BOT CHORD Rigid ceiling directly applied or 7-6-2 oc bracing.

REACTIONS (lb/size) 1=954/0-3-8, 15=941/Mechanical
Max Horz 1=305(load case 5)
Max Uplift1=-270(load case 5), 15=-269(load case 5)

FORCES (lb) - Maximum Compression/Maximum Tension
TOP CHORD 1-2=-811/183, 2-3=-531/114, 3-4=-1627/599, 4-5=-937/417, 5-6=-709/412, 6-7=-709/412, 7-8=-929/382, 9-15=-941/348, 8-9=-814/366
BOT CHORD 1-12=-71/115, 3-12=-9/62, 3-11=-683/1498, 10-11=-683/1497, 9-10=-84/155
WEBS 8-10=-189/586, 6-10=-181/548, 4-11=0/195, 4-10=-954/553

NOTES

1) Unbalanced roof live loads have been considered for this design.
2) Wind: ASCE 7-98; 110mph (3-second gust); h=20ft; TCDL=4.2psf; BCDL=3.0psf; Category II; Exp B; enclosed; MWFRS gable end zone and C-C Exterior(2) zone; Lumber DOL=1.60 plate grip DOL=1.60. This truss is designed for C-C for members and forces, and for MWFRS for reactions specified.
3) Provide adequate drainage to prevent water ponding.
4) All plates are MT20 plates unless otherwise indicated.
5) The following joint(s) require plate inspection per the Tooth Count Method when this truss is chosen for quality assurance inspection: 5.
6) Refer to girder(s) for truss to truss connections.
7) Provide mechanical connection (by others) of truss to bearing plate capable of withstanding 270 lb uplift at joint 1 and 269 lb uplift at joint 15.

LOAD CASE(S) Standard

SEPTEMBER 21, 2005 TRUSS DESIGN ENGINEER:
THOMAS E. MILLER PE 56877, BYRON K. ANDERSON PE 60987
STRUCTURAL ENGINEERING AND INSPECTIONS, INC. EB 9196
16105 N. FLORIDA AVE. STE B, LUTZ, FL 33549

Job	Truss	Truss Type	Qty	Ply	Dwg.#092105578
L130833	T14	SPECIAL	4	1	Job Reference (optional)

Builders FirstSource, Lake City, Fl 32055

6.200 s Jul 13 2005 MiTek Industries, Inc. Tue Sep 20 17:51:04 2005 Page 1

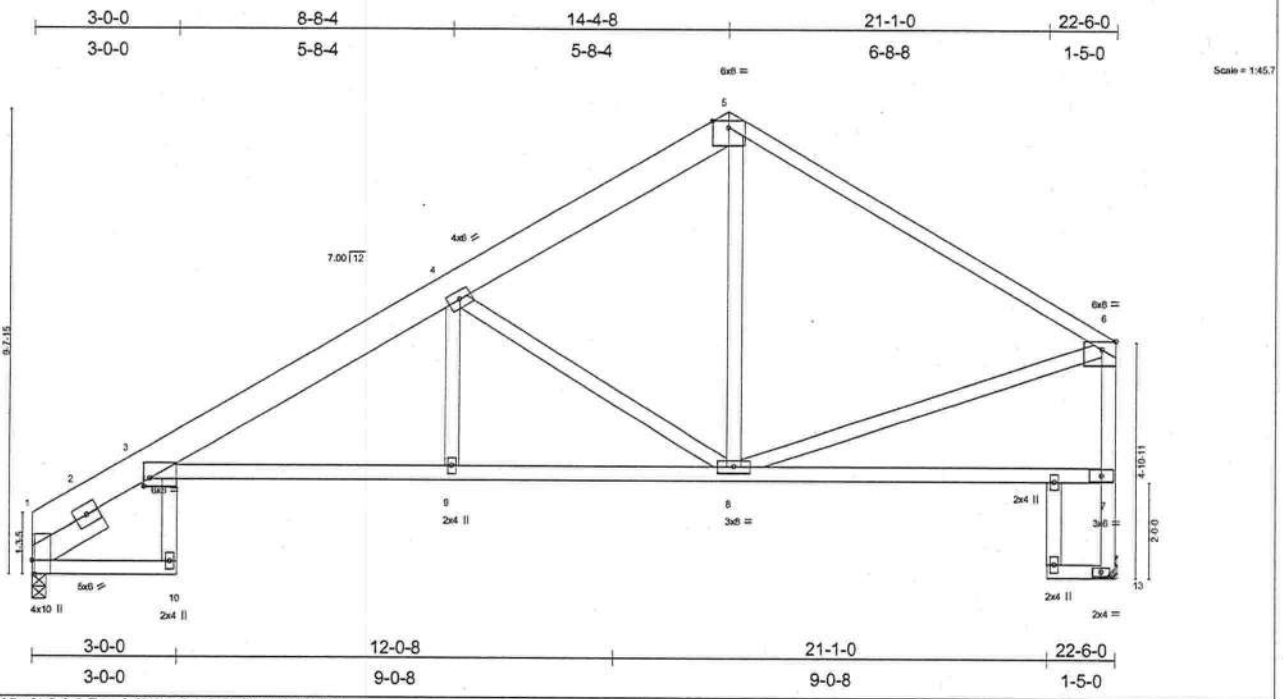

Plate Offsets (X,Y): [1:0-3-8,Edge], [3:0-1-8,0-2-0], [6:0-3-8,Edge]

LOADING (psf)		SPACING	2-0-0	CSI		DEFL	in	(loc)	l/defl	L/d	PLATES	GRIP
TCLL	20.0	Plates Increase	1.25	TC	0.55	Vert(LL)	-0.31	10	>864	240	MT20	244/190
TCDL	7.0	Lumber Increase	1.25	BC	0.53	Vert(TL)	-0.50	10	>533	180		
BCLL	10.0	Rep Stress Incr	YES	WB	0.78	Horz(TL)	0.36	13	n/a	n/a		
BCDL	5.0	Code FBC2001/TPI2002		(Matrix)							Weight: 155 lb	

LUMBER

TOP CHORD 2 X 8 SYP 2400F 2.0E *Except*
T2 2 X 4 SYP No.2D
BOT CHORD 2 X 4 SYP No.2D *Except*
B3 2 X 4 SYP No.3, B3 2 X 4 SYP No.3
WEBS 2 X 4 SYP No.3 *Except*
W5 2 X 4 SYP No.2D
SLIDER Left 2 X 6 SYP No.1D 1-8-10

BRACING

TOP CHORD Structural wood sheathing directly applied or 6-0-0 oc purlins, except end verticals.
BOT CHORD Rigid ceiling directly applied or 7-6-6 oc bracing.

REACTIONS (lb/size) 1=954/0-3-8, 13=941/Mechanical
Max Horz 1=307(load case 5)
Max Uplift1=-272(load case 5), 13=-275(load case 5)

FORCES (lb) - Maximum Compression/Maximum Tension
TOP CHORD 1-2=-662/136, 2-3=-290/133, 3-4=-1616/587, 4-5=-928/416, 5-6=-932/381, 7-13=-941/347, 6-7=-816/364
BOT CHORD 1-10=0/0, 3-9=-676/1479, 8-9=-676/1479, 7-8=-81/152
WEBS 5-8=-179/550, 6-8=-200/599, 4-9=0/228, 4-8=-945/543

NOTES

1) Unbalanced roof live loads have been considered for this design.
2) Wind: ASCE 7-98; 110mph (3-second gust); h=20ft; TCDL=4.2psf; BCDL=3.0psf; Category II; Exp B; enclosed: MWFRS gable end zone and C-C Exterior(2) zone; Lumber DOL=1.60 plate grip DOL=1.60. This truss is designed for C-C for members and forces, and for MWFRS for reactions specified.
3) Refer to girder(s) for truss to truss connections.
4) Provide mechanical connection (by others) of truss to bearing plate capable of withstanding 272 lb uplift at joint 1 and 275 lb uplift at joint 13.

LOAD CASE(S) Standard

SEPTEMBER 21, 2005 TRUSS DESIGN ENGINEER:
THOMAS E. MILLER PE 56877, BYRON K. ANDERSON PE 60987
STRUCTURAL ENGINEERING AND INSPECTIONS, INC. EB 9196
16105 N. FLORIDA AVE. STE B, LUTZ, FL 33549

Job	Truss	Truss Type	Qty	Ply	Dwg.#092105579
L130833	T15	SPECIAL	1	3	Job Reference (optional)

Builders FirstSource, Lake City, Fl 32055 — 6.200 s Jul 13 2005 MiTek Industries, Inc. Tue Sep 20 17:51:05 2005 Page 1

-2-0-0	3-6-14	6-0-15	11-1-8	16-2-0	20-8-4	25-0-12	29-7-0	32-10-3	36-7-0
2-0-0	3-6-14	2-6-1	5-0-8	5-0-8	4-6-4	4-4-8	4-6-4	3-3-3	3-8-13

Scale = 1:55.7

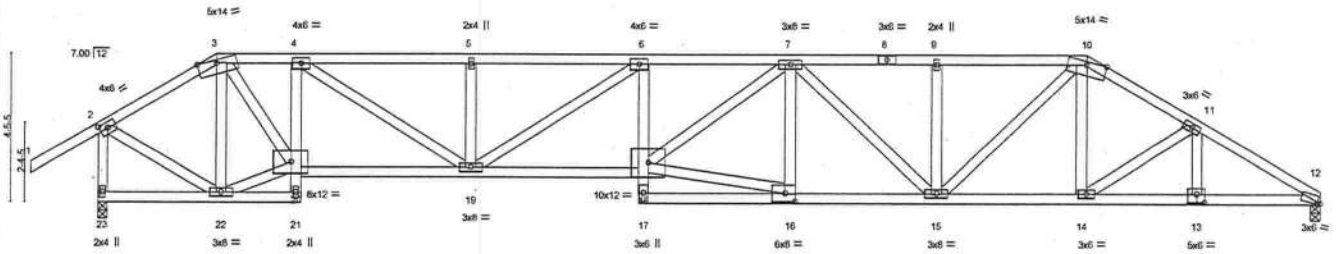

3-6-14	6-0-15	11-1-8	16-2-0	20-8-4	25-0-12	29-7-0	32-10-3	36-7-0
3-6-14	2-6-1	5-0-8	5-0-8	4-6-4	4-4-8	4-6-4	3-3-3	3-8-13

Plate Offsets (X,Y): [2:0-2-14,0-2-0], [12:0-1-2,0-0-7], [13:0-3-0,0-3-0], [16:0-3-8,0-3-0]

LOADING (psf)		SPACING	2-0-0	CSI		DEFL	in	(loc)	l/defl	L/d	PLATES	GRIP
TCLL	20.0	Plates Increase	1.25	TC	0.31	Vert(LL)	0.28	18-19	>999	240	MT20	244/190
TCDL	7.0	Lumber Increase	1.25	BC	0.56	Vert(TL)	-0.44	18-19	>998	180		
BCLL	10.0	Rep Stress Incr	NO	WB	0.72	Horz(TL)	0.14	12	n/a	n/a		
BCDL	5.0	Code FBC2001/TPI2002		(Matrix)							Weight: 682 lb	

LUMBER
TOP CHORD 2 X 4 SYP No.2D
BOT CHORD 2 X 4 SYP No.1D
WEBS 2 X 4 SYP No.3 *Except*
W1 2 X 4 SYP No.2D

BRACING
TOP CHORD Structural wood sheathing directly applied or 6-0-0 oc purlins, except end verticals.
BOT CHORD Rigid ceiling directly applied or 10-0-0 oc bracing.

REACTIONS (lb/size) 12=3160/0-3-8, 23=3733/0-3-8
Max Horz 23=168(load case 3)
Max Uplift12=-1698(load case 2), 23=-2014(load case 3)

FORCES (lb) - Maximum Compression/Maximum Tension
TOP CHORD 1-2=0/58, 2-3=-3290/1898, 3-4=-5292/3130, 4-5=-7901/4620, 5-6=-7901/4620, 6-7=-9411/5487, 7-8=-6604/3876, 8-9=-6604/3876, 9-10=-6605/3875, 10-11=-5582/3210, 11-12=-5714/3142, 2-23=-3487/1930
BOT CHORD 22-23=-175/110, 21-22=-269/314, 20-21=-1/71, 4-20=-2045/1454, 19-20=-3238/5447, 18-19=-5570/9579, 17-18=-15/210, 6-18=-86/562, 16-17=-533/909, 15-16=-4295/7464, 14-15=-2699/4837, 13-14=-2624/4817, 12-13=-2624/4817
WEBS 3-22=-2081/1254, 20-22=-1478/2607, 3-20=-2551/4337, 4-19=-1771/2954, 5-19=-608/640, 6-19=-2003/1192, 16-18=-3844/6698, 7-18=-1473/2424, 7-16=-1170/897, 7-15=-1221/753, 9-15=-507/549, 10-15=-1495/2441, 10-14=-369/776, 11-14=-252/135, 11-13=0/54, 2-22=-1793/3150

NOTES
1) 3-ply truss to be connected together with 0.131"x3" Nails as follows:
Top chords connected as follows: 2 X 4 - 1 row at 0-9-0 oc.
Bottom chords connected as follows: 2 X 4 - 1 row at 0-9-0 oc.
Webs connected as follows: 2 X 4 - 1 row at 0-9-0 oc.
2) All loads are considered equally applied to all plies, except if noted as front (F) or back (B) face in the LOAD CASE(S) section. Ply to ply connections have been provided to distribute only loads noted as (F) or (B), unless otherwise indicated.
3) Unbalanced roof live loads have been considered for this design.
4) Wind: ASCE 7-98; 110mph (3-second gust); h=20ft; TCDL=4.2psf; BCDL=3.0psf; Category II; Exp B; enclosed; MWFRS gable end zone; end vertical left exposed; Lumber DOL=1.60 plate grip DOL=1.60.
5) Provide adequate drainage to prevent water ponding.
6) Provide mechanical connection (by others) of truss to bearing plate capable of withstanding 1698 lb uplift at joint 12 and 2014 lb uplift at joint 23.
7) Girder carries tie-in span(s): 7-0-0 from 0-0-0 to 3-6-14
8) Girder carries hip end with 7-0-0 right side setback, 3-6-14 left side setback, and 7-0-0 end setback.
9) Hanger(s) or other connection device(s) shall be provided sufficient to support concentrated load(s) 539 lb down and 374 lb up at 29-7-0, and 275 lb down and 191 lb up at 3-6-14 on bottom chord. The design/selection of such connection device(s) is the responsibility of others.

LOAD CASE(S) Standard
1) Regular: Lumber Increase=1.25, Plate Increase=1.25
Uniform Loads (plf)
Vert: 1-2=-54, 2-3=-54, 3-10=-118(F=-64), 10-12=-54, 22-23=-129(F=-99), 21-22=-65(F=-35), 18-20=-65(F=-35), 14-17=-65(F=-35), 12-14=-30
Concentrated Loads (lb)
Vert: 22=-275(F) 14=-539(F)

SEPTEMBER 21, 2005 TRUSS DESIGN ENGINEER:
THOMAS E. MILLER PE 56877, BYRON K. ANDERSON PE 60987
STRUCTURAL ENGINEERING AND INSPECTIONS, INC. EB 9196
16105 N. FLORIDA AVE. STE B, LUTZ, FL 33549

Job	Truss	Truss Type	Qty	Ply	Dwg.#092105580
L130833	T16	SPECIAL	1	1	Job Reference (optional)

Builders FirstSource, Lake City, Fl 32055

6.200 s Jul 13 2005 MiTek Industries, Inc. Tue Sep 20 17:51:06 2005 Page 1

-2-0-0	5-6-14	6-0-15	11-0-3	16-2-0	21-10-8	27-7-0	31-10-3	36-7-0
2-0-0	5-6-14	0-6-1	4-11-4	5-1-13	5-8-8	5-8-8	4-3-3	4-8-13

Scale = 1:65.8

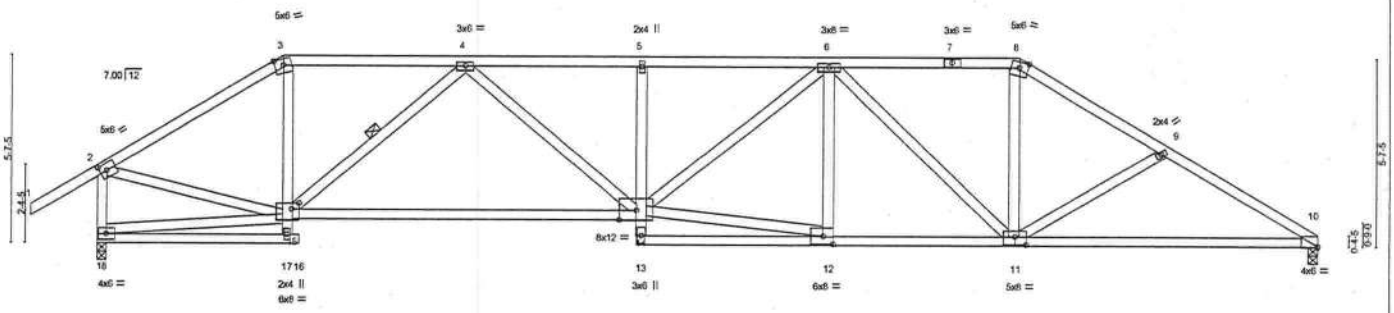

6-0-15	16-2-0	21-10-8	27-7-0	36-7-0
6-0-15	10-1-1	5-8-8	5-8-8	9-0-0

Plate Offsets (X,Y): [2:0-2-9,0-2-8], [10:0-0-0,0-0-4], [11:0-4-0,0-3-0], [12:0-3-8,0-3-0], [15:0-2-8,0-2-4]

LOADING (psf)		SPACING	2-0-0	CSI		DEFL	in	(loc)	l/defl	L/d	PLATES	GRIP
TCLL	20.0	Plates Increase	1.25	TC	0.31	Vert(LL)	-0.49	14-15	>891	240	MT20	244/190
TCDL	7.0	Lumber Increase	1.25	BC	0.92	Vert(TL)	-0.82	14-15	>529	180		
BCLL	10.0	Rep Stress Incr	YES	WB	0.83	Horz(TL)	0.14	10	n/a	n/a		
BCDL	5.0	Code FBC2001/TPI2002		(Matrix)							Weight: 221 lb	

LUMBER
TOP CHORD 2 X 4 SYP No.2D
BOT CHORD 2 X 4 SYP No.2D *Except*
B3 2 X 4 SYP No.3
WEBS 2 X 4 SYP No.3 *Except*
W1 2 X 4 SYP No.2D, W4 2 X 4 SYP No.1D

BRACING
TOP CHORD Structural wood sheathing directly applied or 3-7-5 oc purlins, except end verticals.
BOT CHORD Rigid ceiling directly applied or 2-2-0 oc bracing.
WEBS 1 Row at midpt 4-15

REACTIONS (lb/size) 10=1522/0-3-8, 18=1649/0-3-8
Max Horz 18=208(load case 4)
Max Uplift10=-503(load case 3), 18=-559(load case 4)

FORCES (lb) - Maximum Compression/Maximum Tension
TOP CHORD 1-2=0/58, 2-3=-1894/765, 3-4=-1614/721, 4-5=-3081/1240, 5-6=-3031/1237, 6-7=-1987/860, 7-8=-1988/860, 8-9=-2341/931, 9-10=-2557/1003, 2-18=-1549/717
BOT CHORD 17-18=-18/48, 16-17=0/0, 14-15=-1121/2497, 13-14=0/108, 5-14=-287/240, 12-13=-177/21, 11-12=-972/2525, 10-11=-789/2157
WEBS 4-15=-1219/656, 4-14=-255/786, 12-14=-802/2526, 6-14=-324/684, 6-12=-223/146, 6-11=-817/491, 8-11=-274/881, 9-11=-220/234, 15-17=0/84, 3-15=-227/674, 15-18=-164/219, 2-15=-605/1548

NOTES
1) Unbalanced roof live loads have been considered for this design.
2) Wind: ASCE 7-98; 110mph (3-second gust); h=20ft; TCDL=4.2psf; BCDL=3.0psf; Category II; Exp B; enclosed; MWFRS gable end zone and C-C Exterior(2) zone; end vertical left exposed; Lumber DOL=1.60 plate grip DOL=1.60. This truss is designed for C-C for members and forces, and for MWFRS for reactions specified.
3) Provide adequate drainage to prevent water ponding.
4) Provide mechanical connection (by others) of truss to bearing plate capable of withstanding 503 lb uplift at joint 10 and 559 lb uplift at joint 18.

LOAD CASE(S) Standard

SEPTEMBER 21, 2005 TRUSS DESIGN ENGINEER:
THOMAS E. MILLER PE 56877, BYRON K. ANDERSON PE 60987
STRUCTURAL ENGINEERING AND INSPECTIONS, INC. EB 9196
16105 N. FLORIDA AVE. STE B, LUTZ, FL 33549

Job	Truss	Truss Type	Qty	Ply	Dwg.#092105581
L130833	T17	SPECIAL	1	1	Job Reference (optional)

Builders FirstSource, Lake City, Fl 32055

6.200 s Jul 13 2005 MiTek Industries, Inc. Tue Sep 20 17:51:07 2005 Page 1

-2-0-0	6-0-15	7-6-14	11-10-7	16-2-0	20-10-8	25-7-0	30-10-3	36-7-0
2-0-0	6-0-15	1-5-15	4-3-9	4-3-9	4-8-8	4-8-8	5-3-3	5-8-13

Scale = 1:65.6

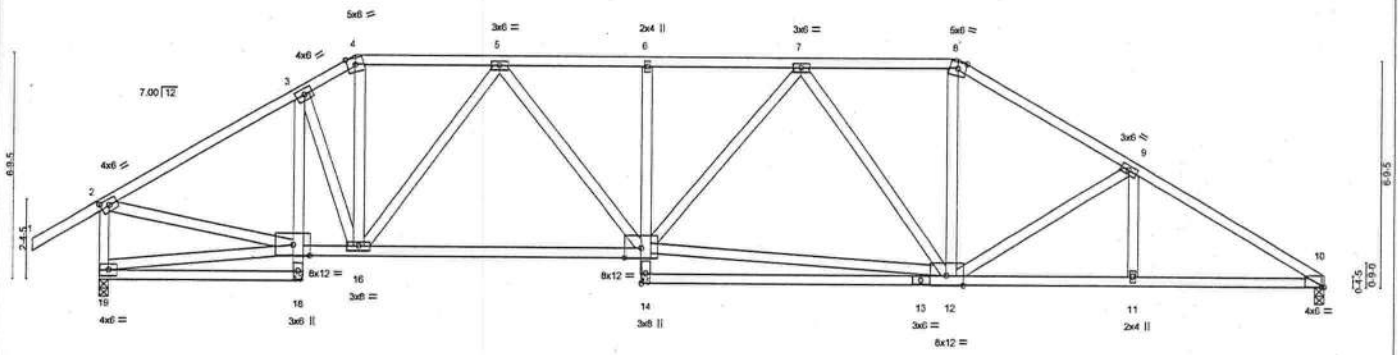

Plate Offsets (X,Y): [2:0-2-14,0-2-0], [10:0-0-13,0-0-2]

LOADING (psf)		SPACING	2-0-0	CSI		DEFL	in	(loc)	l/defl	L/d	PLATES	GRIP
TCLL	20.0	Plates Increase	1.25	TC	0.25	Vert(LL)	-0.25	15-16	>999	240	MT20	244/190
TCDL	7.0	Lumber Increase	1.25	BC	0.94	Vert(TL)	-0.41	15-16	>999	180		
BCLL	10.0	Rep Stress Incr	YES	WB	0.93	Horz(TL)	0.12	10	n/a	n/a		
BCDL	5.0	Code FBC2001/TPI2002		(Matrix)							Weight: 246 lb	

LUMBER

TOP CHORD 2 X 4 SYP No.2D
BOT CHORD 2 X 4 SYP No.2D *Except*
B2 2 X 4 SYP No.3, B4 2 X 4 SYP No.3
WEBS 2 X 4 SYP No.3 *Except*
W1 2 X 4 SYP No.2D

BRACING

TOP CHORD Structural wood sheathing directly applied or 3-9-14 oc purlins, except end verticals.
BOT CHORD Rigid ceiling directly applied or 2-2-0 oc bracing.

REACTIONS (lb/size) 10=1521/0-3-8, 19=1644/0-3-8
Max Horz 19=249(load case 4)
Max Uplift10=-442(load case 3), 19=-484(load case 4)

FORCES (lb) - Maximum Compression/Maximum Tension

TOP CHORD 1-2=0/58, 2-3=-1884/748, 3-4=-1874/814, 4-5=-1623/723, 5-6=-2405/1025, 6-7=-2377/1020, 7-8=-1840/824, 8-9=-2177/883, 9-10=-2618/972, 2-19=-1538/712
BOT CHORD 18-19=-16/177, 17-18=0/84, 3-17=-377/124, 16-17=-664/1536, 15-16=-848/2085, 14-15=0/151, 6-15=-243/204, 13-14=-102/391, 12-13=-102/391, 11-12=-751/2180, 10-11=-751/2180
WEBS 3-16=-209/304, 4-16=-308/762, 5-16=-822/470, 5-15=-225/559, 12-15=-666/1797, 7-15=-186/371, 7-12=-675/462, 8-12=-253/788, 17-19=-221/195, 2-17=-459/1515, 9-11=0/170, 9-12=-431/289

NOTES

1) Unbalanced roof live loads have been considered for this design.
2) Wind: ASCE 7-98; 110mph (3-second gust); h=20ft; TCDL=4.2psf; BCDL=3.0psf; Category II; Exp B; enclosed; MWFRS gable end zone and C-C Exterior(2) zone; end vertical left exposed; Lumber DOL=1.60 plate grip DOL=1.60. This truss is designed for C-C for members and forces, and for MWFRS for reactions specified.
3) Provide adequate drainage to prevent water ponding.
4) Provide mechanical connection (by others) of truss to bearing plate capable of withstanding 442 lb uplift at joint 10 and 484 lb uplift at joint 19.

LOAD CASE(S) Standard

SEPTEMBER 21, 2005 TRUSS DESIGN ENGINEER:
THOMAS E. MILLER PE 56877, BYRON K. ANDERSON PE 60987
STRUCTURAL ENGINEERING AND INSPECTIONS, INC. EB 9196
16105 N. FLORIDA AVE. STE B, LUTZ, FL 33549

Job	Truss	Truss Type	Qty	Ply	
L130833	T18	SPECIAL	1	1	Job Reference (optional)

Dwg.#092105582

Builders FirstSource, Lake City, Fl 32055

6.200 s Jul 13 2005 MiTek Industries, Inc. Tue Sep 20 17:51:07 2005 Page 1

-2-0-0	6-0-15	9-6-14	16-2-0	21-9-8	23-7-0	26-1-8	31-1-7	36-7-0
2-0-0	6-0-15	3-5-15	6-7-2	5-7-8	1-9-8	2-6-8	4-11-15	5-5-9

Scale = 1:65.6

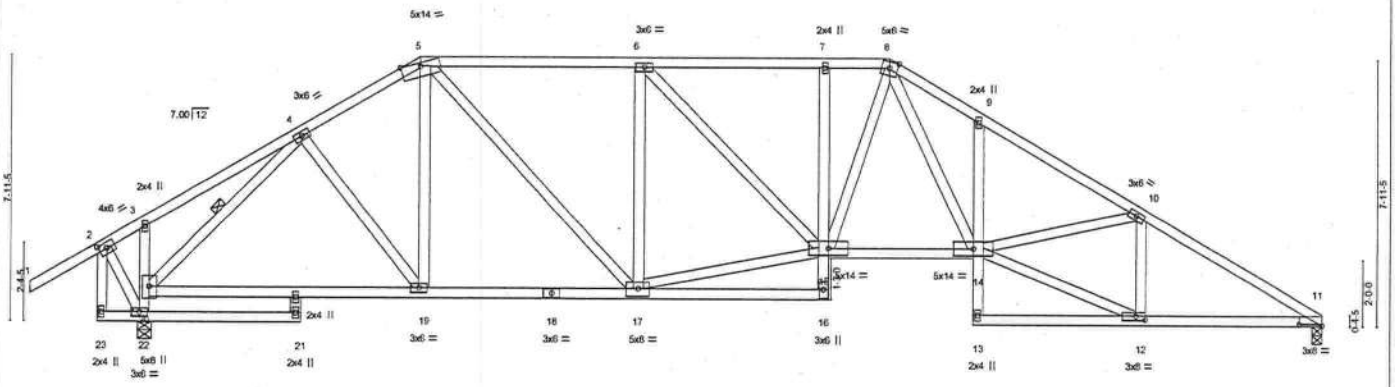

1-5-4	6-0-15	9-6-14	16-2-0	21-9-8	23-7-0	26-1-8	36-7-0
1-5-4	4-7-12	3-5-15	6-7-2	5-7-8	1-9-8	2-6-8	10-5-8

Plate Offsets (X,Y): [2:0-2-14,0-2-0], [11:0-8-1,0-0-10], [12:0-3-8,0-1-8]

LOADING (psf)		SPACING	2-0-0	CSI		DEFL	in	(loc)	l/defl	L/d	PLATES	GRIP
TCLL	20.0	Plates Increase	1.25	TC	0.25	Vert(LL)	-0.34	21	>999	240	MT20	244/190
TCDL	7.0	Lumber Increase	1.25	BC	0.74	Vert(TL)	-0.58	21	>719	180		
BCLL	10.0	Rep Stress Incr	YES	WB	0.71	Horz(TL)	0.17	11	n/a	n/a		
BCDL	5.0	Code FBC2001/TPI2002		(Matrix)							Weight: 260 lb	

LUMBER
TOP CHORD 2 X 4 SYP No.2D
BOT CHORD 2 X 4 SYP No.2D *Except*
B3 2 X 4 SYP No.3, B5 2 X 4 SYP No.3, B7 2 X 4 SYP No.3
WEBS 2 X 4 SYP No.3 *Except*
W1 2 X 4 SYP No.2D

BRACING
TOP CHORD Structural wood sheathing directly applied or 3-7-4 oc purlins, except end verticals.
BOT CHORD Rigid ceiling directly applied or 6-0-0 oc bracing.
WEBS 1 Row at midpt 4-20

REACTIONS (lb/size) 11=1470/0-3-8, 22=1834/0-4-15
Max Horz 22=-235(load case 3)
Max Uplift11=-394(load case 6), 22=-477(load case 5)

FORCES (lb) - Maximum Compression/Maximum Tension
TOP CHORD 1-2=0/58, 2-3=-92/7, 3-4=-166/127, 4-5=-1635/662, 5-6=-1852/817, 6-7=-2226/915, 7-8=-2234/913, 8-9=-3063/1214, 9-10=-3096/1117, 10-11=-2536/903, 2-23=-291/0
BOT CHORD 22-23=-74/56, 21-22=0/0, 19-20=-498/1198, 18-19=-504/1383, 17-18=-504/1383, 16-17=-25/106, 15-16=0/90, 7-15=-183/175, 14-15=-542/2114, 13-14=0/73, 9-14=-189/194, 12-13=-14/59, 11-12=-696/2113
WEBS 4-19=-241/365, 5-19=-26/244, 2-22=0/257, 20-22=-1541/609, 3-20=-238/151, 4-20=-1667/676, 10-12=-677/303, 12-14=-738/2221, 10-14=-259/512, 8-15=-312/474, 8-14=-464/1160, 6-17=-752/404, 5-17=-392/724, 15-17=-602/1790, 6-15=-141/552

NOTES
1) Unbalanced roof live loads have been considered for this design.
2) Wind: ASCE 7-98; 110mph (3-second gust); h=20ft; TCDL=4.2psf; BCDL=3.0psf; Category II; Exp B; enclosed; MWFRS gable end zone and C-C Exterior(2) zone; Lumber DOL=1.60 plate grip DOL=1.60. This truss is designed for C-C for members and forces, and for MWFRS for reactions specified.
3) This truss is not designed to support a ceiling and is not intended for use where aesthetics are a consideration.
4) Provide adequate drainage to prevent water ponding.
5) Provide mechanical connection (by others) of truss to bearing plate capable of withstanding 394 lb uplift at joint 11 and 477 lb uplift at joint 22.

LOAD CASE(S) Standard

SEPTEMBER 21, 2005 TRUSS DESIGN ENGINEER:
THOMAS E. MILLER PE 56877, BYRON K. ANDERSON PE 60987
STRUCTURAL ENGINEERING AND INSPECTIONS, INC: EB 9196
16105 N. FLORIDA AVE. STE B, LUTZ, FL 33549

Job	Truss	Truss Type	Qty	Ply	Dwg.#092105583
L130833	T19	SPECIAL	1	1	Job Reference (optional)

Builders FirstSource, Lake City, Fl 32055 — 6.200 s Jul 13 2005 MiTek Industries, Inc. Tue Sep 20 17:51:08 2005 Page 1

-2-0-0	5-11-3	11-6-14	16-6-15	21-7-0	26-1-8	31-1-7	36-7-0
2-0-0	5-11-3	5-7-11	5-0-1	5-0-1	4-6-8	4-11-15	5-5-9

Scale = 1:65.6

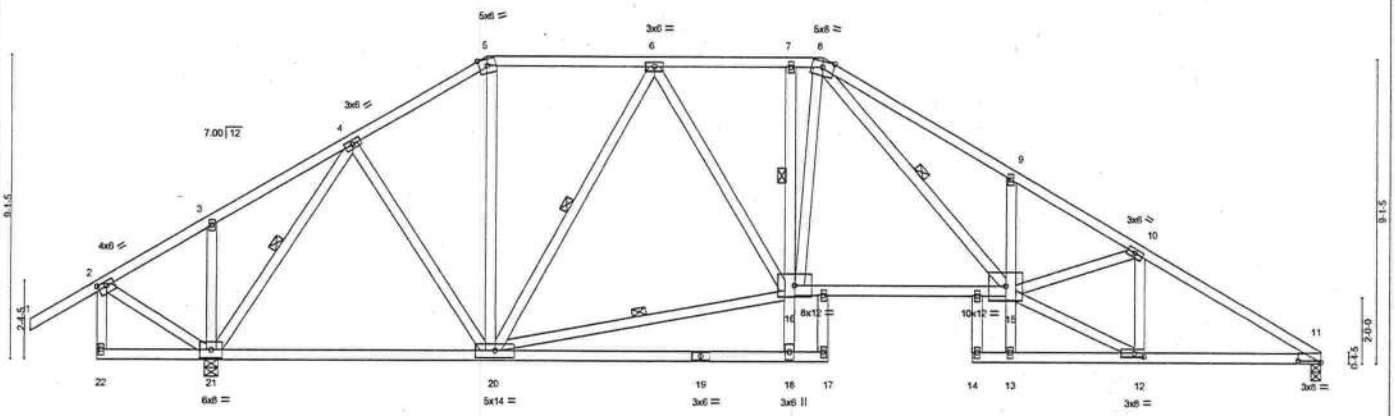

3-5-4	11-6-14	20-9-8	21-9-8	26-1-8	27-1-8	36-7-0
3-5-4	8-1-10	9-2-10	1-0-0	4-4-0	1-0-0	9-5-8

Plate Offsets (X,Y): [2:0-3-0,0-1-8], [11:0-8-1,0-0-10], [12:0-3-8,0-1-8]

LOADING (psf)		SPACING	2-0-0	CSI		DEFL	in	(loc)	l/defl	L/d	PLATES	GRIP
TCLL	20.0	Plates Increase	1.25	TC	0.48	Vert(LL)	0.35	15-16	>999	240	MT20	244/190
TCDL	7.0	Lumber Increase	1.25	BC	0.55	Vert(TL)	-0.37	15-16	>999	180		
BCLL	10.0	Rep Stress Incr	YES	WB	0.71	Horz(TL)	0.16	11	n/a	n/a		
BCDL	5.0	Code FBC2001/TPI2002		(Matrix)							Weight: 273 lb	

LUMBER
TOP CHORD 2 X 4 SYP No.2D
BOT CHORD 2 X 4 SYP No.2D *Except*
B3 2 X 4 SYP No.3, B6 2 X 4 SYP No.3
WEBS 2 X 4 SYP No.3 *Except*
W1 2 X 4 SYP No.2D

BRACING
TOP CHORD Structural wood sheathing directly applied or 3-5-9 oc purlins, except end verticals.
BOT CHORD Rigid ceiling directly applied or 4-11-15 oc bracing. Except:
1 Row at midpt 7-16
WEBS 1 Row at midpt 6-20, 16-20, 4-21, 8-15

REACTIONS (lb/size) 11=1400/0-3-8, 21=1833/0-4-15
Max Horz 21=309(load case 5)
Max Uplift11=-769(load case 3), 21=-1050(load case 5)

FORCES (lb) - Maximum Compression/Maximum Tension
TOP CHORD 1-2=0/58, 2-3=-142/258, 3-4=-34/263, 4-5=-1149/1079, 5-6=-958/988, 6-7=-1680/1562, 7-8=-1693/1573, 8-9=-3219/2794, 9-10=-3167/2617, 10-11=-2395/1948, 2-22=-5/6
BOT CHORD 21-22=-47/70, 20-21=-739/657, 19-20=-186/69, 18-19=-186/69, 17-18=0/0, 16-18=-147/164, 7-16=-95/141, 15-16=-1315/1689, 13-15=-47/90, 9-15=-252/251, 13-14=0/0, 12-13=-28/38, 11-12=-1592/1990
WEBS 5-20=-363/336, 6-20=-897/684, 6-16=-484/603, 16-20=-1121/1340, 10-12=-858/645, 12-15=-1836/2205, 10-15=-486/726, 3-21=-217/190, 2-21=-161/213, 4-20=-409/534, 4-21=-1552/1190, 8-15=-1423/1604, 8-16=-276/265

NOTES
1) Unbalanced roof live loads have been considered for this design.
2) Wind: ASCE 7-98; 110mph (3-second gust); h=20ft; TCDL=4.2psf; BCDL=3.0psf; Category II; Exp B; enclosed; MWFRS gable end zone and C-C Exterior(2) zone; cantilever left exposed ; porch left exposed; Lumber DOL=1.60 plate grip DOL=1.60. This truss is designed for C-C for members and forces, and for MWFRS for reactions specified.
3) This truss is not designed to support a ceiling and is not intended for use where aesthetics are a consideration.
4) Provide adequate drainage to prevent water ponding.
5) All plates are 2x4 MT20 unless otherwise indicated.
6) Provide mechanical connection (by others) of truss to bearing plate capable of withstanding 769 lb uplift at joint 11 and 1050 lb uplift at joint 21.

LOAD CASE(S) Standard

SEPTEMBER 21, 2005 TRUSS DESIGN ENGINEER:
THOMAS E. MILLER PE 56877, BYRON K. ANDERSON PE 60987
STRUCTURAL ENGINEERING AND INSPECTIONS, INC. EB 9196
16105 N. FLORIDA AVE. STE B, LUTZ, FL 33549

Job	Truss	Truss Type	Qty	Ply	Dwg.#092105584
L130833	T20	SPECIAL	1	1	Job Reference (optional)

Builders FirstSource, Lake City, Fl 32055

6.200 s Jul 13 2005 MiTek Industries, Inc. Tue Sep 20 17:51:09 2005 Page 1

-2-0-0	2-3-12	7-11-5	13-6-14	19-7-0	23-10-4	26-1-8	31-1-7	36-7-0
2-0-0	2-3-12	5-7-9	5-7-9	6-0-2	4-3-4	2-3-4	4-11-15	5-5-9

Scale = 1:65.6

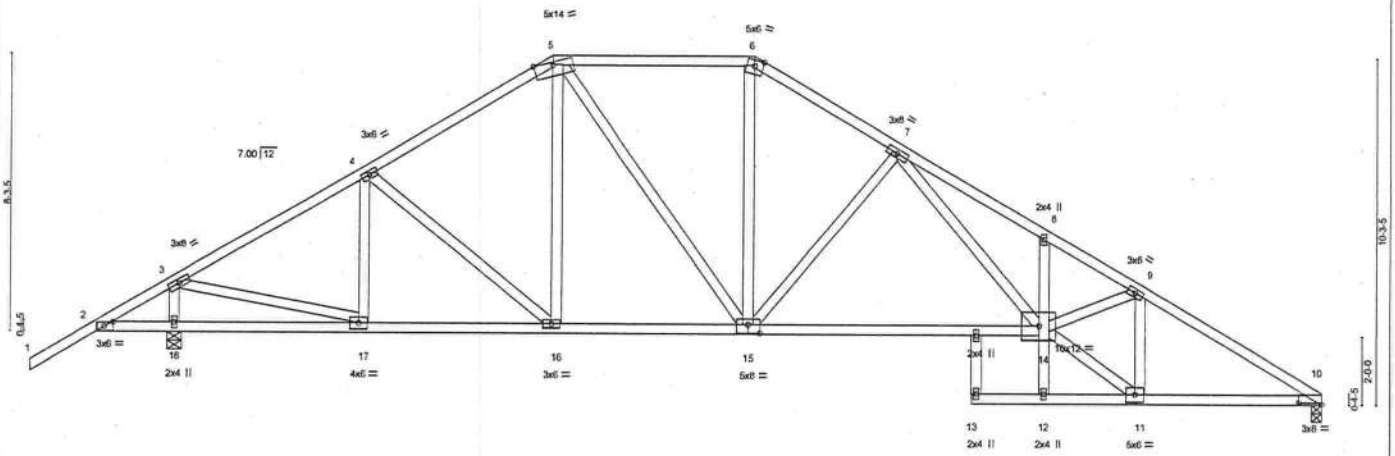

2-3-12	7-11-5	13-6-14	19-7-0	23-10-4	26-1-8	28-1-8	31-1-7	36-7-0
2-3-12	5-7-9	5-7-9	6-0-2	4-3-4	2-3-4	2-0-0	2-11-15	5-5-9

Plate Offsets (X,Y): [2:0-3-3,0-1-8], [10:0-8-1,0-0-10], [15:0-4-0,0-3-0]

LOADING (psf)		SPACING	2-0-0	CSI		DEFL	in	(loc)	l/defl	L/d	PLATES	GRIP
TCLL	20.0	Plates Increase	1.25	TC	0.27	Vert(LL)	-0.31	14-15	>999	240	MT20	244/190
TCDL	7.0	Lumber Increase	1.25	BC	0.54	Vert(TL)	-0.51	14-15	>797	180		
BCLL	10.0	Rep Stress Incr	YES	WB	0.82	Horz(TL)	0.15	10	n/a	n/a		
BCDL	5.0	Code FBC2001/TPI2002		(Matrix)							Weight: 229 lb	

LUMBER
TOP CHORD 2 X 4 SYP No.2D
BOT CHORD 2 X 4 SYP No.2D *Except*
B4 2 X 4 SYP No.3
WEBS 2 X 4 SYP No.3

BRACING
TOP CHORD Structural wood sheathing directly applied or 3-2-0 oc purlins.
BOT CHORD Rigid ceiling directly applied or 6-0-0 oc bracing.

REACTIONS (lb/size) 10=1463/0-3-8, 18=1770/0-4-15
Max Horz 18=-318(load case 3)
Max Uplift10=-425(load case 6), 18=-625(load case 5)

FORCES (lb) - Maximum Compression/Maximum Tension
TOP CHORD 1-2=0/53, 2-3=-435/356, 3-4=-1699/532, 4-5=-1647/643, 5-6=-1570/680, 6-7=-1860/730, 7-8=-3786/1281, 8-9=-3743/1179, 9-10=-2515/823
BOT CHORD 2-18=-262/462, 17-18=-262/475, 16-17=-361/1401, 15-16=-289/1361, 14-15=-490/2102, 12-14=0/108, 8-14=-165/155, 12-13=0/0, 11-12=-42/0, 10-11=-625/2092
WEBS 3-18=-1633/813, 3-17=-728/1708, 4-17=-240/218, 4-16=-180/142, 5-16=-59/215, 5-15=-197/444, 6-15=-177/633, 7-15=-865/408, 11-14=-712/2569, 9-14=-217/1182, 9-11=-1335/422, 7-14=-546/1806

NOTES
1) Unbalanced roof live loads have been considered for this design.
2) Wind: ASCE 7-98; 110mph (3-second gust); h=20ft; TCDL=4.2psf; BCDL=3.0psf; Category II; Exp B; enclosed; MWFRS gable end zone and C-C Exterior(2) zone; cantilever left exposed ; Lumber DOL=1.60 plate grip DOL=1.60. This truss is designed for C-C for members and forces, and for MWFRS for reactions specified.
3) This truss is not designed to support a ceiling and is not intended for use where aesthetics are a consideration.
4) Provide adequate drainage to prevent water ponding.
5) Provide mechanical connection (by others) of truss to bearing plate capable of withstanding 425 lb uplift at joint 10 and 625 lb uplift at joint 18.

LOAD CASE(S) Standard

SEPTEMBER 21, 2005 TRUSS DESIGN ENGINEER:
THOMAS E. MILLER PE 56877, BYRON K. ANDERSON PE 60987
STRUCTURAL ENGINEERING AND INSPECTIONS, INC. EB 9196
16105 N. FLORIDA AVE. STE B, LUTZ, FL 33549

Job	Truss	Truss Type	Qty	Ply	Dwg.#092105585
L130833	T21	SPECIAL	1	1	Job Reference (optional)

Builders FirstSource, Lake City, Fl 32055

6.200 s Jul 13 2005 MiTek Industries, Inc. Tue Sep 20 17:51:10 2005 Page 1

-2-0-0	8-0-3	15-6-14	17-7-0	22-10-4	26-1-8	31-1-7	36-7-0
2-0-0	8-0-3	7-6-10	2-0-2	5-3-4	3-3-4	4-11-15	5-5-9

Scale = 1:65.6

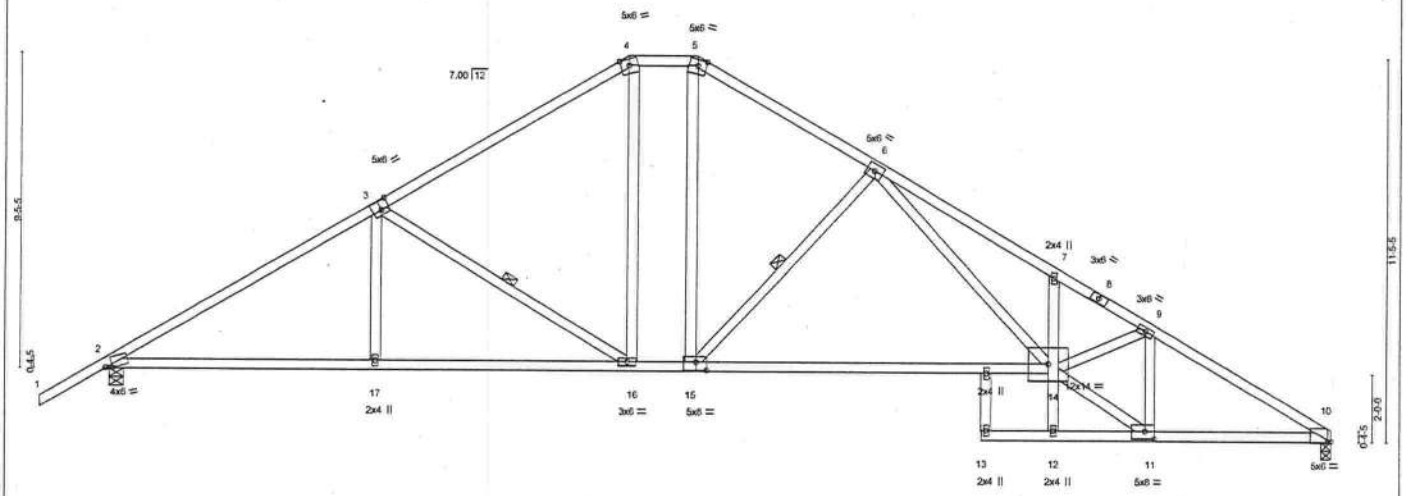

0-3-12	8-0-3	15-6-14	17-7-0	26-1-8	28-1-8	36-7-0
0-3-12	7-8-8	7-6-10	2-0-2	8-6-8	2-0-0	8-5-8

Plate Offsets (X,Y): [2:0-2-6,0-0-11], [3:0-3-0,0-3-4], [10:0-1-3,Edge], [11:0-3-8,0-2-8], [15:0-4-0,0-3-0]

LOADING (psf)		SPACING	2-0-0	CSI		DEFL	in	(loc)	l/defl	L/d	PLATES	GRIP
TCLL	20.0	Plates Increase	1.25	TC	0.64	Vert(LL)	-0.60	14-15	>726	240	MT20	244/190
TCDL	7.0	Lumber Increase	1.25	BC	0.74	Vert(TL)	-0.96	14-15	>452	180		
BCLL	10.0	Rep Stress Incr	YES	WB	0.91	Horz(TL)	0.22	10	n/a	n/a		
BCDL	5.0	Code FBC2001/TPI2002		(Matrix)							Weight: 216 lb	

LUMBER
TOP CHORD 2 X 4 SYP No.2D
BOT CHORD 2 X 4 SYP No.2D *Except*
B4 2 X 4 SYP No.3
WEBS 2 X 4 SYP No.3

BRACING
TOP CHORD Structural wood sheathing directly applied or 2-10-11 oc purlins.
BOT CHORD Rigid ceiling directly applied or 6-0-0 oc bracing.
WEBS 1 Row at midpt 3-16, 6-15

REACTIONS (lb/size) 2=1661/0-4-15, 10=1566/0-3-8
Max Horz 2=-359(load case 3)
Max Uplift2=-556(load case 5), 10=-460(load case 6)

FORCES (lb) - Maximum Compression/Maximum Tension
TOP CHORD 1-2=0/54, 2-3=-2520/833, 3-4=-1883/733, 4-5=-1545/711, 5-6=-1868/758, 6-7=-4199/1419, 7-8=-4037/1296, 8-9=-4103/1285, 9-10=-2713/894
BOT CHORD 2-17=-552/2071, 16-17=-553/2067, 15-16=-226/1545, 14-15=-525/2184, 12-14=0/103, 7-14=-191/186, 12-13=0/0, 11-12=-73/0, 10-11=-685/2261
WEBS 3-17=0/274, 3-16=-671/398, 4-16=-155/487, 5-15=-302/901, 6-15=-980/484, 6-14=-622/2089, 9-11=-1477/458, 11-14=-770/2824, 9-14=-264/1335

NOTES
1) Unbalanced roof live loads have been considered for this design.
2) Wind: ASCE 7-98; 110mph (3-second gust); h=20ft; TCDL=4.2psf; BCDL=3.0psf; Category II; Exp B; enclosed; MWFRS gable end zone and C-C Exterior(2) zone; Lumber DOL=1.60 plate grip DOL=1.60. This truss is designed for C-C for members and forces, and for MWFRS for reactions specified.
3) Provide adequate drainage to prevent water ponding.
4) Provide mechanical connection (by others) of truss to bearing plate capable of withstanding 556 lb uplift at joint 2 and 460 lb uplift at joint 10.

LOAD CASE(S) Standard

SEPTEMBER 21, 2005 TRUSS DESIGN ENGINEER:
THOMAS E. MILLER PE 56877, BYRON K. ANDERSON PE 60987
STRUCTURAL ENGINEERING AND INSPECTIONS, INC. EB 9196
16105 N. FLORIDA AVE. STE B, LUTZ, FL 33549

Job	Truss	Truss Type	Qty	Ply	Dwg.#092105586
L130833	T22	SPECIAL	1	1	Job Reference (optional)

Builders FirstSource, Lake City, Fl 32055 — 6.200 s Jul 13 2005 MiTek Industries, Inc. Tue Sep 20 17:51:11 2005 Page 1

-1-10-0	5-10-0	11-2-8	16-6-15	22-5-1	26-1-8	31-1-7	36-7-0
1-10-0	5-10-0	5-4-7	5-4-7	5-10-3	3-8-7	4-11-15	5-5-9

Scale: 3/16"=1'

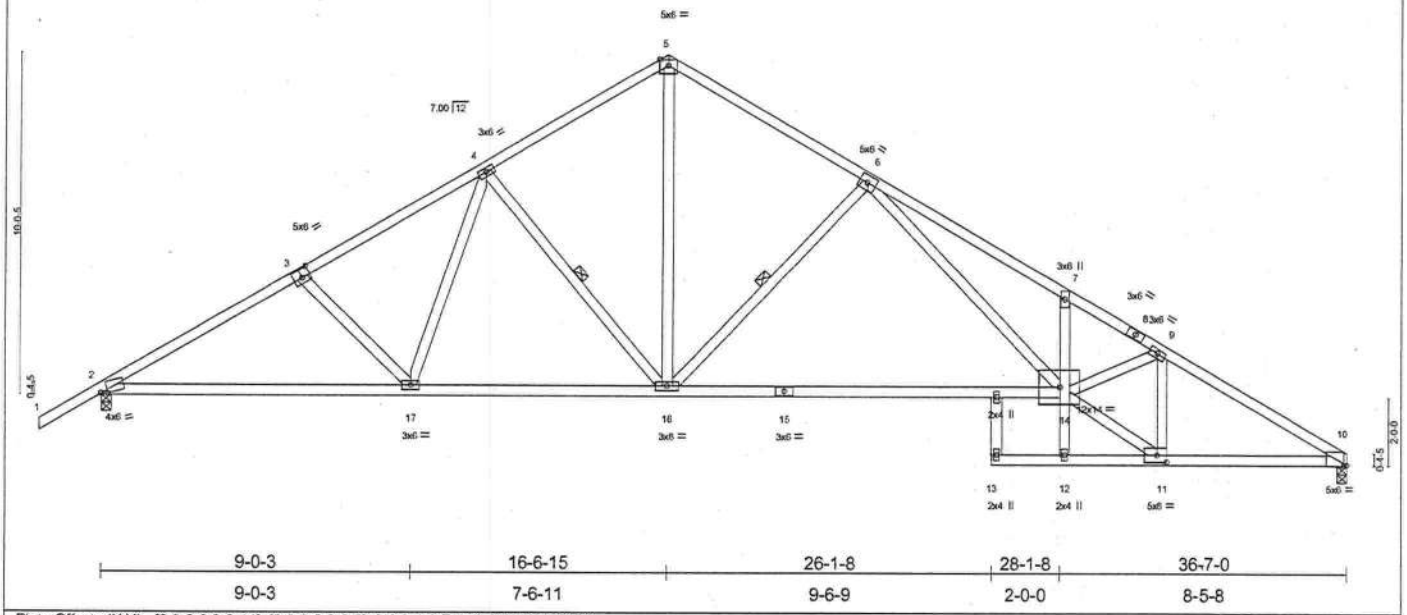

9-0-3	16-6-15	26-1-8	28-1-8	36-7-0
9-0-3	7-6-11	9-6-9	2-0-0	8-5-8

Plate Offsets (X,Y): [2:0-2-6,0-0-11], [3:0-3-0,0-3-0], [10:0-1-3,Edge], [11:0-3-8,0-2-8]

LOADING (psf)		SPACING	2-0-0	CSI		DEFL	in	(loc)	l/defl	L/d	PLATES	GRIP
TCLL	20.0	Plates Increase	1.25	TC	0.40	Vert(LL)	-0.57	14-16	>761	240	MT20	244/190
TCDL	7.0	Lumber Increase	1.25	BC	0.75	Vert(TL)	-0.96	14-16	>454	180		
BCLL	10.0	Rep Stress Incr	YES	WB	0.91	Horz(TL)	0.22	10	n/a	n/a		
BCDL	5.0	Code FBC2001/TPI2002		(Matrix)							Weight: 214 lb	

LUMBER
TOP CHORD 2 X 4 SYP No.2D
BOT CHORD 2 X 4 SYP No.2D *Except*
B4 2 X 4 SYP No.3
WEBS 2 X 4 SYP No.3

BRACING
TOP CHORD Structural wood sheathing directly applied or 2-11-0 oc purlins.
BOT CHORD Rigid ceiling directly applied or 6-0-0 oc bracing.
WEBS 1 Row at midpt 4-16, 6-16

REACTIONS (lb/size) 2=1650/0-3-8, 10=1569/0-3-8
Max Horz 2=-381(load case 3)
Max Uplift2=-552(load case 5), 10=-468(load case 6)

FORCES (lb) - Maximum Compression/Maximum Tension
TOP CHORD 1-2=0/49, 2-3=-2540/872, 3-4=-2341/845, 4-5=-1779/732, 5-6=-1791/729, 6-7=-4247/1426, 7-8=-4057/1290, 8-9=-4120/1279, 9-10=-2719/891
BOT CHORD 2-17=-642/2131, 16-17=-433/1815, 15-16=-499/2122, 14-15=-499/2122, 12-14=0/102, 7-14=-228/208, 12-13=0/0, 11-12=-89/0, 10-11=-682/2266
WEBS 3-17=-261/242, 4-17=-133/446, 4-16=-553/349, 5-16=-528/1415, 6-16=-949/485, 6-14=-648/2184, 9-11=-1483/453, 11-14=-760/2837, 9-14=-264/1349

NOTES
1) Unbalanced roof live loads have been considered for this design.
2) Wind: ASCE 7-98; 110mph (3-second gust); h=20ft; TCDL=4.2psf; BCDL=3.0psf; Category II; Exp B; enclosed; MWFRS gable end zone and C-C Exterior(2) zone; Lumber DOL=1.60 plate grip DOL=1.60. This truss is designed for C-C for members and forces, and for MWFRS for reactions specified.
3) Provide mechanical connection (by others) of truss to bearing plate capable of withstanding 552 lb uplift at joint 2 and 468 lb uplift at joint 10.

LOAD CASE(S) Standard

SEPTEMBER 21, 2005 TRUSS DESIGN ENGINEER:
THOMAS E. MILLER PE 56877, BYRON K. ANDERSON PE 60987
STRUCTURAL ENGINEERING AND INSPECTIONS, INC. EB 9196
16105 N. FLORIDA AVE. STE B, LUTZ, FL 33549

Job	Truss	Truss Type	Qty	Ply	Dwg.#092105587
L130833	T23	SPECIAL	1	1	Job Reference (optional)

Builders FirstSource, Lake City, Fl 32055

6.200 s Jul 13 2005 MiTek Industries, Inc. Tue Sep 20 17:51:12 2005 Page 1

6-2-0	11-10-7	17-6-14	18-7-0	26-1-8	31-2-8	36-7-0
6-2-0	5-8-7	5-8-7	1-0-2	7-6-8	5-1-0	5-4-8

Scale: 3/16"=1'

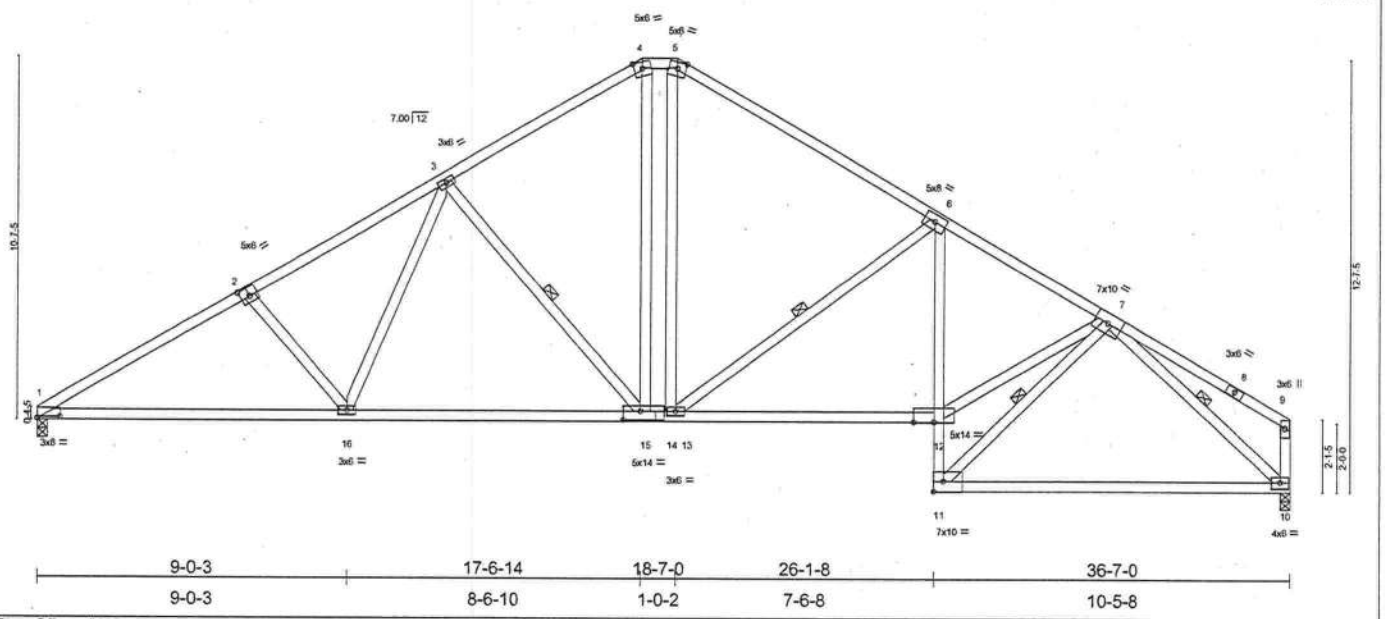

9-0-3	17-6-14	18-7-0	26-1-8	36-7-0
9-0-3	8-6-10	1-0-2	7-6-8	10-5-8

Plate Offsets (X,Y): [1:0-8-1,0-0-10], [2:0-3-0,0-3-0], [14:0-6-0,0-3-0]

LOADING (psf)		SPACING	2-0-0	CSI		DEFL	in	(loc)	l/defl	L/d	PLATES	GRIP
TCLL	20.0	Plates Increase	1.25	TC	0.42	Vert(LL)	-0.25	12-13	>999	240	MT20	244/190
TCDL	7.0	Lumber Increase	1.25	BC	0.63	Vert(TL)	-0.41	12-13	>999	180		
BCLL	10.0	Rep Stress Incr	YES	WB	0.65	Horz(TL)	0.19	10	n/a	n/a		
BCDL	5.0	Code FBC2001/TPI2002		(Matrix)							Weight: 234 lb	

LUMBER
TOP CHORD 2 X 4 SYP No.2D
BOT CHORD 2 X 4 SYP No.2D
WEBS 2 X 4 SYP No.3 *Except*
W9 2 X 4 SYP No.2D

BRACING
TOP CHORD Structural wood sheathing directly applied or 3-7-1 oc purlins, except end verticals.
BOT CHORD Rigid ceiling directly applied or 7-4-1 oc bracing.
WEBS 1 Row at midpt 3-15, 6-13, 7-11, 7-10

REACTIONS (lb/size) 1=1524/0-3-8, 10=1524/0-3-8
Max Horz 1=-362(load case 3)
Max Uplift1=-449(load case 5), 10=-453(load case 6)

FORCES (lb) - Maximum Compression/Maximum Tension
TOP CHORD 1-2=-2537/914, 2-3=-2347/901, 3-4=-1657/740, 4-5=-1374/706, 5-6=-1692/720, 6-7=-2297/870, 7-8=-245/126, 8-9=-322/111, 9-10=-278/155
BOT CHORD 1-16=-751/2130, 15-16=-507/1748, 14-15=-259/1374, 13-14=-259/1374, 12-13=-573/1977, 11-12=-406/1304, 6-12=-98/427, 10-11=-466/1364
WEBS 2-16=-280/275, 3-16=-186/561, 3-15=-622/390, 4-15=-310/664, 5-13=-165/531, 6-13=-780/447, 7-12=-621/2024, 7-11=-1657/628, 7-10=-1590/605

NOTES
1) Unbalanced roof live loads have been considered for this design.
2) Wind: ASCE 7-98; 110mph (3-second gust); h=20ft; TCDL=4.2psf; BCDL=3.0psf; Category II; Exp B; enclosed; MWFRS gable end zone and C-C Exterior(2) zone; Lumber DOL=1.60 plate grip DOL=1.60. This truss is designed for C-C for members and forces, and for MWFRS for reactions specified.
3) Provide adequate drainage to prevent water ponding.
4) Provide mechanical connection (by others) of truss to bearing plate capable of withstanding 449 lb uplift at joint 1 and 453 lb uplift at joint 10.

LOAD CASE(S) Standard

SEPTEMBER 21, 2005 TRUSS DESIGN ENGINEER:
THOMAS E. MILLER PE 56877, BYRON K. ANDERSON PE 60987
STRUCTURAL ENGINEERING AND INSPECTIONS, INC. EB 9196
16105 N. FLORIDA AVE. STE B, LUTZ, FL 33549

Job	Truss	Truss Type	Qty	Ply	
L130833	T24	COMMON	1	1	Job Reference (optional)

Dwg.#092105588

Builders FirstSource, Lake City, Fl 32055

6.200 s Jul 13 2005 MiTek Industries, Inc. Tue Sep 20 17:51:12 2005 Page 1

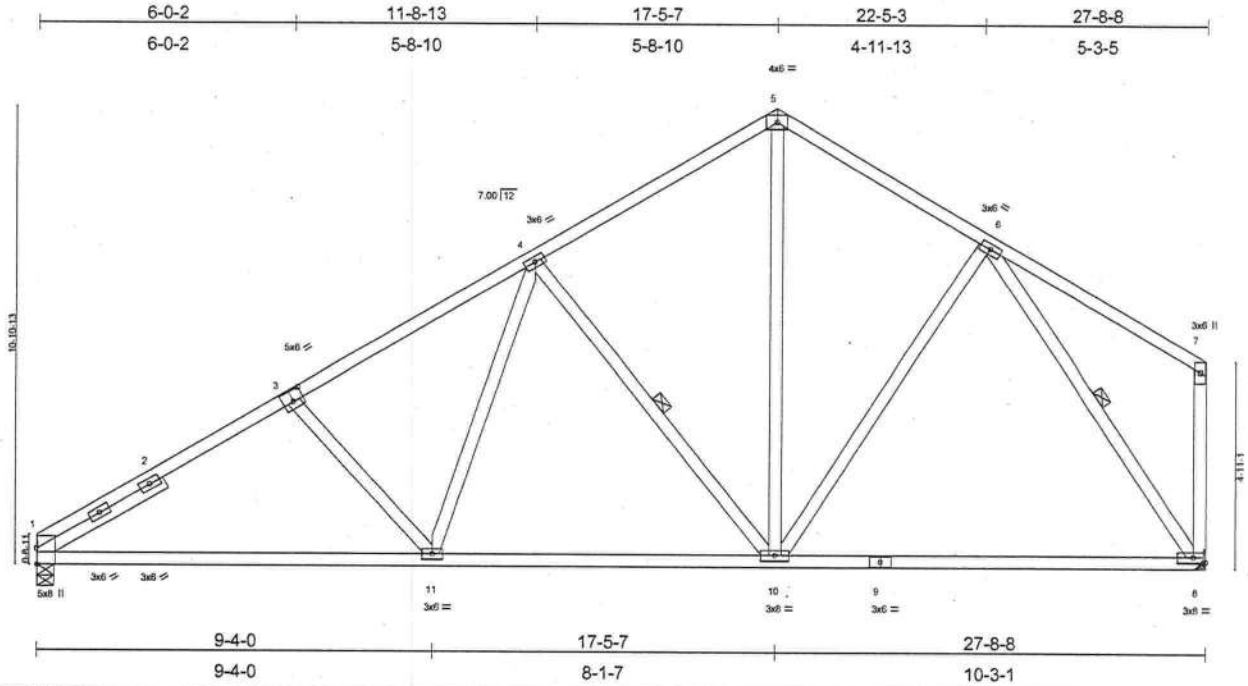

Plate Offsets (X,Y): [1:0-4-10,Edge], [3:0-3-0,0-3-0]

LOADING (psf)		SPACING	2-0-0	CSI		DEFL	in	(loc)	l/defl	L/d	PLATES	GRIP
TCLL	20.0	Plates Increase	1.25	TC	0.40	Vert(LL)	-0.19	8-10	>999	240	MT20	244/190
TCDL	7.0	Lumber Increase	1.25	BC	0.55	Vert(TL)	-0.33	8-10	>994	180		
BCLL	10.0	Rep Stress Incr	YES	WB	0.51	Horz(TL)	0.04	8	n/a	n/a		
BCDL	5.0	Code FBC2001/TPI2002		(Matrix)							Weight: 174 lb	

LUMBER
TOP CHORD 2 X 4 SYP No.2D
BOT CHORD 2 X 4 SYP No.2D
WEBS 2 X 4 SYP No.3 *Except*
W7 2 X 4 SYP No.2D
SLIDER Left 2 X 4 SYP No.2D 3-5-7

BRACING
TOP CHORD Structural wood sheathing directly applied or 5-1-8 oc purlins, except end verticals.
BOT CHORD Rigid ceiling directly applied or 7-10-5 oc bracing.
WEBS 1 Row at midpt 4-10, 6-8

REACTIONS (lb/size) 1=1158/0-4-15, 8=1158/Mechanical
Max Horz 1=349(load case 4)
Max Uplift1=-349(load case 5), 8=-324(load case 5)

FORCES (lb) - Maximum Compression/Maximum Tension
TOP CHORD 1-2=-1718/584, 2-3=-1567/602, 3-4=-1506/581, 4-5=-929/452, 5-6=-915/458, 6-7=-153/88, 7-8=-182/123
BOT CHORD 1-11=-674/1391, 10-11=-453/1094, 9-10=-223/616, 8-9=-223/616
WEBS 3-11=-241/260, 4-11=-158/456, 4-10=-594/386, 5-10=-259/561, 6-10=-118/286, 6-8=-990/393

NOTES
1) Unbalanced roof live loads have been considered for this design.
2) Wind: ASCE 7-98; 110mph (3-second gust); h=20ft; TCDL=4.2psf; BCDL=3.0psf; Category II; Exp B; enclosed; MWFRS gable end zone and C-C Exterior(2) zone; Lumber DOL=1.60 plate grip DOL=1.60. This truss is designed for C-C for members and forces, and for MWFRS for reactions specified.
3) Refer to girder(s) for truss to truss connections.
4) Provide mechanical connection (by others) of truss to bearing plate capable of withstanding 349 lb uplift at joint 1 and 324 lb uplift at joint 8.

LOAD CASE(S) Standard

SEPTEMBER 21, 2005 TRUSS DESIGN ENGINEER:
THOMAS E. MILLER PE 56877, BYRON K. ANDERSON PE 60987
STRUCTURAL ENGINEERING AND INSPECTIONS, INC. EB 9196
16105 N. FLORIDA AVE. STE B, LUTZ, FL 33549

Job	Truss	Truss Type	Qty	Ply	
L130833	T25	HIP	1	1	Job Reference (optional)

Dwg.#092105589

Builders FirstSource, Lake City, Fl 32055

6.200 s Jul 13 2005 MiTek Industries, Inc. Tue Sep 20 17:51:13 2005 Page 1

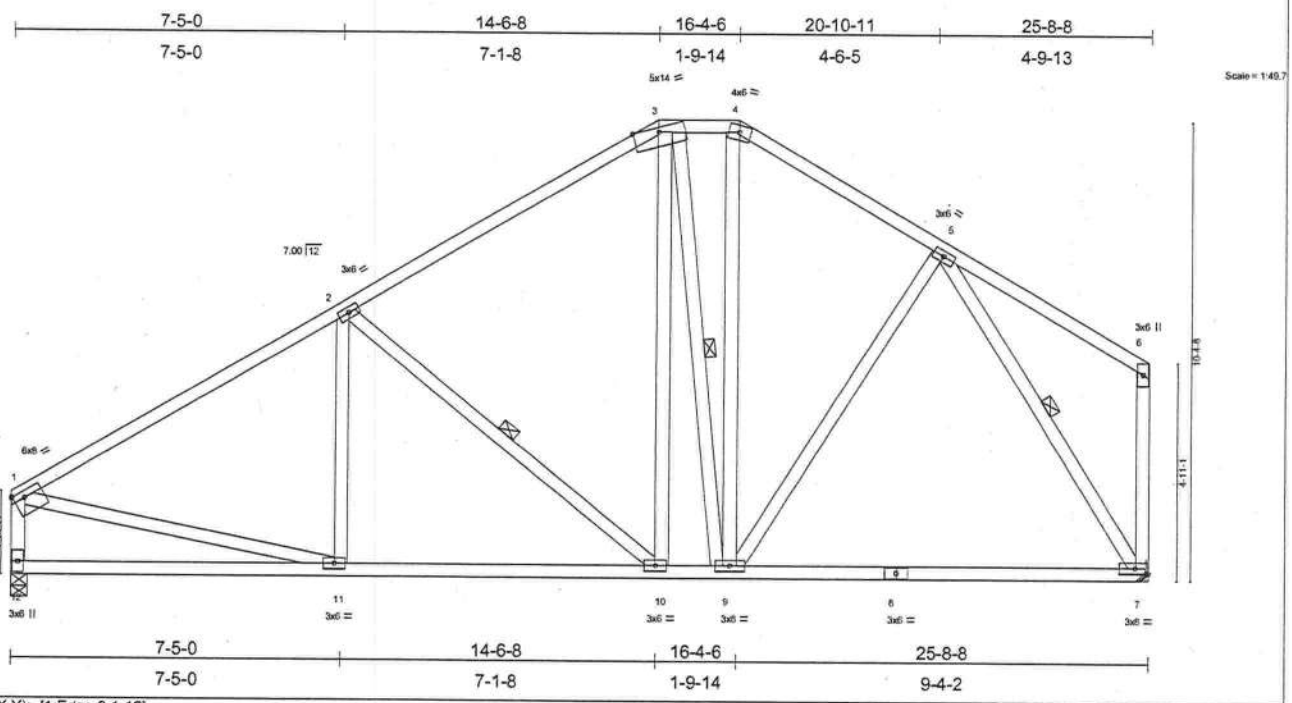

Plate Offsets (X,Y): [1:Edge,0-1-12]

LOADING (psf)		SPACING	2-0-0	CSI		DEFL	in	(loc)	l/defl	L/d	PLATES	GRIP
TCLL	20.0	Plates Increase	1.25	TC	0.37	Vert(LL)	-0.13	7-9	>999	240	MT20	244/190
TCDL	7.0	Lumber Increase	1.25	BC	0.46	Vert(TL)	-0.23	7-9	>999	180		
BCLL	10.0	Rep Stress Incr	YES	WB	0.34	Horz(TL)	0.02	7	n/a	n/a		
BCDL	5.0	Code FBC2001/TPI2002		(Matrix)							Weight: 192 lb	

LUMBER
TOP CHORD 2 X 4 SYP No.2D
BOT CHORD 2 X 4 SYP No.2D
WEBS 2 X 4 SYP No.3 *Except*
W1 2 X 4 SYP No.2D, W9 2 X 4 SYP No.2D

BRACING
TOP CHORD Structural wood sheathing directly applied or 5-6-6 oc purlins, except end verticals.
BOT CHORD Rigid ceiling directly applied or 9-8-9 oc bracing.
WEBS 1 Row at midpt 2-10, 3-9, 5-7

REACTIONS (lb/size) 12=1067/0-4-3, 7=1067/Mechanical
Max Horz 12=280(load case 4)
Max Uplift12=-307(load case 5), 7=-301(load case 6)

FORCES (lb) - Maximum Compression/Maximum Tension
TOP CHORD 1-2=-1259/438, 2-3=-892/419, 3-4=-653/409, 4-5=-819/419, 5-6=-128/78, 1-12=-959/373, 6-7=-158/110
BOT CHORD 11-12=-357/241, 10-11=-450/1004, 9-10=-211/685, 8-9=-200/539, 7-8=-200/539
WEBS 2-11=0/108, 2-10=-441/310, 3-10=-181/312, 3-9=-275/252, 4-9=-189/330, 5-9=-114/237, 1-11=-175/815, 5-7=-912/370

NOTES
1) Unbalanced roof live loads have been considered for this design.
2) Wind: ASCE 7-98; 110mph (3-second gust); h=20ft; TCDL=4.2psf; BCDL=3.0psf; Category II; Exp B; enclosed; MWFRS gable end zone and C-C Exterior(2) zone; Lumber DOL=1.60 plate grip DOL=1.60. This truss is designed for C-C for members and forces, and for MWFRS for reactions specified.
3) Provide adequate drainage to prevent water ponding.
4) Refer to girder(s) for truss to truss connections.
5) Provide mechanical connection (by others) of truss to bearing plate capable of withstanding 307 lb uplift at joint 12 and 301 lb uplift at joint 7.

LOAD CASE(S) Standard

SEPTEMBER 21, 2005 TRUSS DESIGN ENGINEER:
THOMAS E. MILLER PE 56877, BYRON K. ANDERSON PE 60987
STRUCTURAL ENGINEERING AND INSPECTIONS, INC. EB 9196
16105 N. FLORIDA AVE. STE B, LUTZ, FL 33549

Job	Truss	Truss Type	Qty	Ply	Dwg.#092105590
L130833	T26	SPECIAL	1	1	Job Reference (optional)

Builders FirstSource, Lake City, Fl 32055

6.200 s Jul 13 2005 MiTek Industries, Inc. Tue Sep 20 17:51:14 2005 Page 1

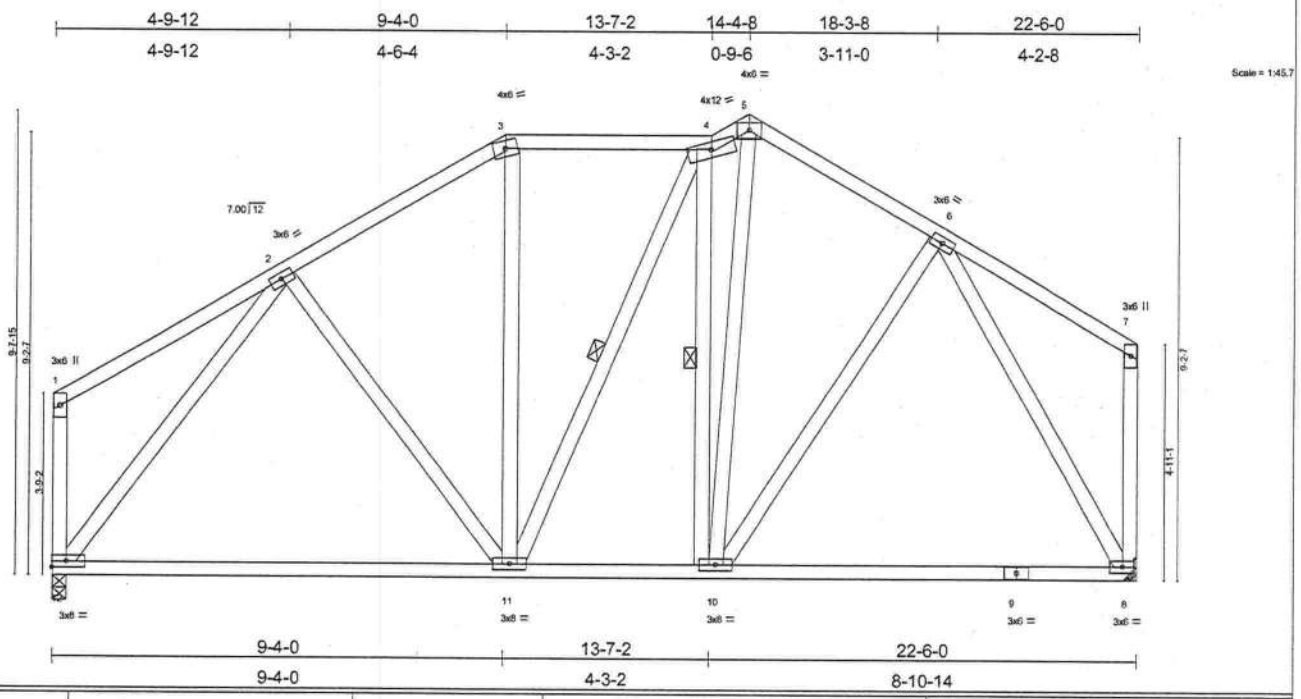

LOADING (psf)		SPACING	2-0-0	CSI		DEFL	in	(loc)	l/defl	L/d	PLATES	GRIP
TCLL	20.0	Plates Increase	1.25	TC	0.38	Vert(LL)	-0.14	11-12	>999	240	MT20	244/190
TCDL	7.0	Lumber Increase	1.25	BC	0.34	Vert(TL)	-0.25	11-12	>999	180		
BCLL	10.0	Rep Stress Incr	YES	WB	0.85	Horz(TL)	0.02	8	n/a	n/a		
BCDL	5.0	Code FBC2001/TPI2002		(Matrix)							Weight: 182 lb	

LUMBER
TOP CHORD 2 X 4 SYP No.2D
BOT CHORD 2 X 4 SYP No.2D
WEBS 2 X 4 SYP No.3 *Except*
W1 2 X 4 SYP No.2D, W9 2 X 4 SYP No.2D

BRACING
TOP CHORD Structural wood sheathing directly applied or 6-0-0 oc purlins, except end verticals.
BOT CHORD Rigid ceiling directly applied or 10-0-0 oc bracing.
WEBS 1 Row at midpt 4-11, 4-10

REACTIONS (lb/size) 12=933/0-3-8, 8=933/Mechanical
Max Horz 12=197(load case 4)
Max Uplift12=-284(load case 5), 8=-261(load case 5)

FORCES (lb) - Maximum Compression/Maximum Tension
TOP CHORD 1-2=-165/82, 2-3=-747/362, 3-4=-594/362, 4-5=-589/361, 5-6=-672/353, 6-7=-119/66, 1-12=-180/114, 7-8=-147/95
BOT CHORD 11-12=-298/536, 10-11=-176/570, 9-10=-158/423, 8-9=-158/423
WEBS 2-11=-112/130, 3-11=-28/140, 4-11=-130/124, 4-10=-401/260, 5-10=-194/376, 6-10=-96/255, 2-12=-756/300, 6-8=-751/316

NOTES
1) Unbalanced roof live loads have been considered for this design.
2) Wind: ASCE 7-98; 110mph (3-second gust); h=20ft; TCDL=4.2psf; BCDL=3.0psf; Category II; Exp B; enclosed; MWFRS gable end zone and C-C Exterior(2) zone; Lumber DOL=1.60 plate grip DOL=1.60. This truss is designed for C-C for members and forces, and for MWFRS for reactions specified.
3) Provide adequate drainage to prevent water ponding.
4) Refer to girder(s) for truss to truss connections.
5) Provide mechanical connection (by others) of truss to bearing plate capable of withstanding 284 lb uplift at joint 12 and 261 lb uplift at joint 8.

LOAD CASE(S) Standard

SEPTEMBER 21, 2005 TRUSS DESIGN ENGINEER:
THOMAS E. MILLER PE 56877, BYRON K. ANDERSON PE 60987
STRUCTURAL ENGINEERING AND INSPECTIONS, INC. EB 9196
16105 N. FLORIDA AVE. STE B, LUTZ, FL 33549

Job	Truss	Truss Type	Qty	Ply	Dwg.#09210559 1
L130833	T27	HIP	1	1	Job Reference (optional)

Builders FirstSource, Lake City, Fl 32055 — 6.200 s Jul 13 2005 MiTek Industries, Inc. Tue Sep 20 17:51:15 2005 Page 1

5-0-0	10-1-0	15-2-0	17-6-15
5-0-0	5-1-0	5-1-0	2-4-15

Scale = 1:29.6

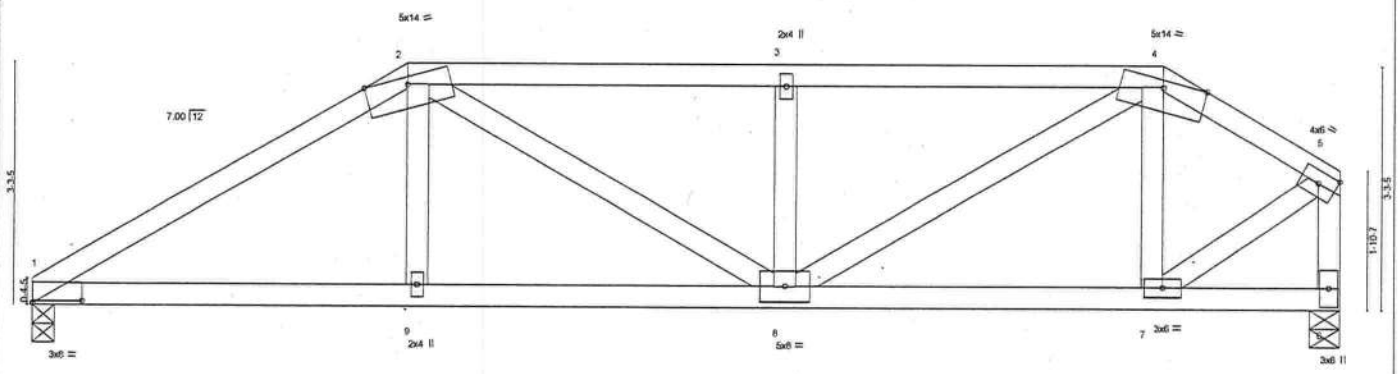

5-0-0	10-1-0	15-2-0	17-6-15
5-0-0	5-1-0	5-1-0	2-4-15

Plate Offsets (X,Y): [1:0-8-1,0-0-6]

LOADING (psf)		SPACING	2-0-0	CSI		DEFL	in	(loc)	l/defl	L/d	PLATES	GRIP
TCLL	20.0	Plates Increase	1.25	TC	0.42	Vert(LL)	0.09	8-9	>999	240	MT20	244/190
TCDL	7.0	Lumber Increase	1.25	BC	0.45	Vert(TL)	-0.13	8-9	>999	180		
BCLL	10.0	Rep Stress Incr	NO	WB	0.48	Horz(TL)	0.03	6	n/a	n/a		
BCDL	5.0	Code FBC2001/TPI2002		(Matrix)							Weight: 88 lb	

LUMBER
TOP CHORD 2 X 4 SYP No.2D
BOT CHORD 2 X 4 SYP No.2D
WEBS 2 X 4 SYP No.3 *Except*
W4 2 X 4 SYP No.2D

BRACING
TOP CHORD Structural wood sheathing directly applied or 4-4-7 oc purlins, except end verticals.
BOT CHORD Rigid ceiling directly applied or 5-10-3 oc bracing.

REACTIONS (lb/size) 1=1194/0-3-8, 6=1438/0-4-15
Max Horz 1=102(load case 4)
Max Uplift1=-804(load case 3), 6=-955(load case 2)

FORCES (lb) - Maximum Compression/Maximum Tension
TOP CHORD 1-2=-2026/1388, 2-3=-2037/1487, 3-4=-2037/1487, 4-5=-1309/874, 5-6=-1424/933
BOT CHORD 1-9=-1239/1694, 8-9=-1253/1717, 7-8=-758/1117, 6-7=-11/11
WEBS 2-9=-289/463, 2-8=-399/456, 3-8=-486/496, 4-8=-850/1079, 4-7=-219/245, 5-7=-943/1353

NOTES
1) Unbalanced roof live loads have been considered for this design.
2) Wind: ASCE 7-98; 110mph (3-second gust); h=20ft; TCDL=4.2psf; BCDL=3.0psf; Category II; Exp B; enclosed; MWFRS gable end zone; porch left and right exposed; Lumber DOL=1.60 plate grip DOL=1.60.
3) Provide adequate drainage to prevent water ponding.
4) Provide mechanical connection (by others) of truss to bearing plate capable of withstanding 804 lb uplift at joint 1 and 955 lb uplift at joint 6.
5) Girder carries hip end with 2-4-15 right side setback, 5-0-0 left side setback, and 5-0-0 end setback.
6) Hanger(s) or other connection device(s) shall be provided sufficient to support concentrated load(s) 363 lb down and 198 lb up at 15-2-0, and 245 lb down and 170 lb up at 5-0-0 on bottom chord. The design/selection of such connection device(s) is the responsibility of others.
7) In the LOAD CASE(S) section, loads applied to the face of the truss are noted as front (F) or back (B).

LOAD CASE(S) Standard
1) Regular: Lumber Increase=1.25, Plate Increase=1.25
Uniform Loads (plf)
Vert: 1-2=-54, 2-4=-91(F=-37), 4-5=-54, 1-9=-30, 7-9=-50(F=-20), 6-7=-30
Concentrated Loads (lb)
Vert: 9=-245(F) 7=-363(F)

SEPTEMBER 21, 2005 TRUSS DESIGN ENGINEER:
THOMAS E. MILLER PE 56877, BYRON K. ANDERSON PE 60987
STRUCTURAL ENGINEERING AND INSPECTIONS, INC. EB 9196
16105 N. FLORIDA AVE. STE B, LUTZ, FL 33549

Job	Truss	Truss Type	Qty	Ply	Dwg.#092105592
L130833	T28	HIP	1	1	Job Reference (optional)

Builders FirstSource, Lake City, Fl 32055 — 6.200 s Jul 13 2005 MiTek Industries, Inc. Tue Sep 20 17:51:15 2005 Page 1

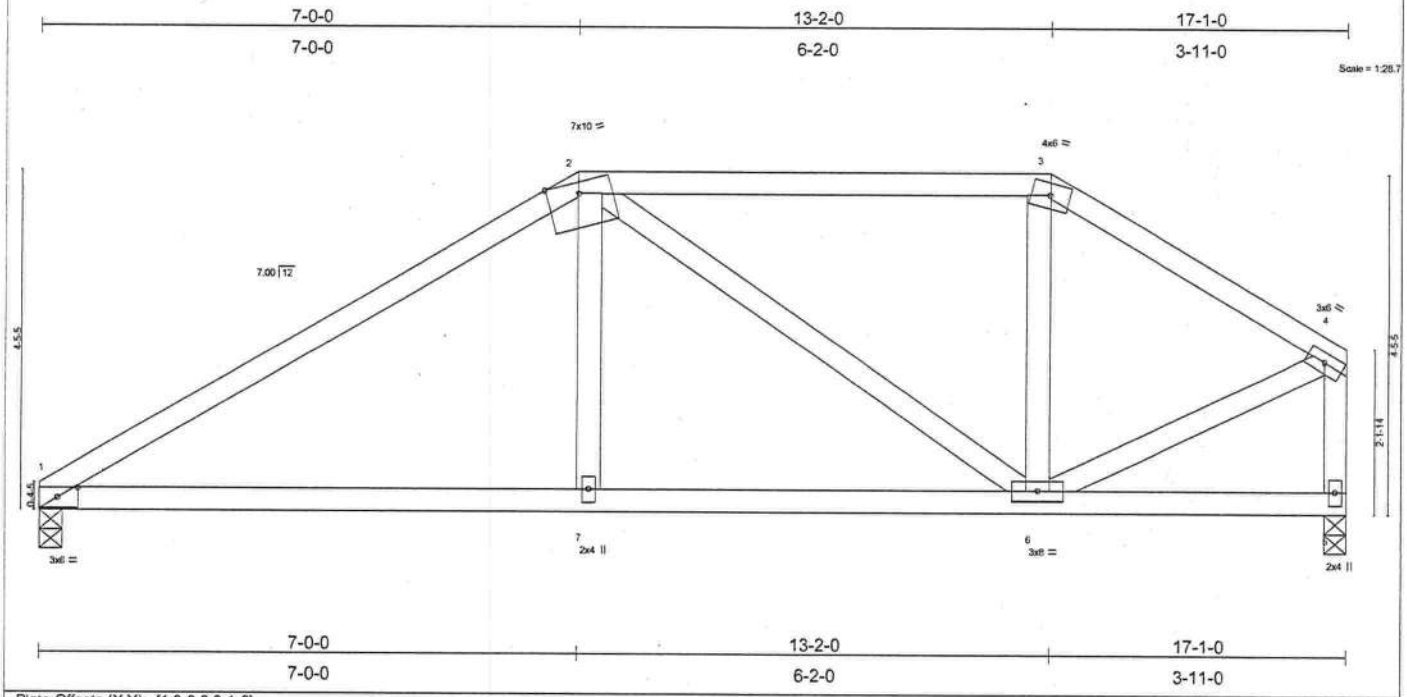

Plate Offsets (X,Y): [1:0-3-3,0-1-8]

LOADING (psf)		SPACING	2-0-0	CSI		DEFL	in	(loc)	l/defl	L/d	PLATES	GRIP
TCLL	20.0	Plates Increase	1.25	TC	0.37	Vert(LL)	0.22	1-7	>930	240	MT20	244/190
TCDL	7.0	Lumber Increase	1.25	BC	0.38	Vert(TL)	0.18	1-7	>999	180		
BCLL	10.0	Rep Stress Incr	YES	WB	0.30	Horz(TL)	-0.02	5	n/a	n/a		
BCDL	5.0	Code FBC2001/TPI2002		(Matrix)							Weight: 84 lb	

LUMBER
TOP CHORD 2 X 4 SYP No.2D
BOT CHORD 2 X 4 SYP No.2D
WEBS 2 X 4 SYP No.3 *Except*
W4 2 X 4 SYP No.2D

BRACING
TOP CHORD Structural wood sheathing directly applied or 6-0-0 oc purlins, except end verticals.
BOT CHORD Rigid ceiling directly applied or 6-5-2 oc bracing.

REACTIONS (lb/size) 1=705/0-3-8, 5=705/0-3-8
Max Horz 1=136(load case 4)
Max Uplift1=-413(load case 4), 5=-408(load case 3)

FORCES (lb) - Maximum Compression/Maximum Tension
TOP CHORD 1-2=-996/983, 2-3=-543/661, 3-4=-670/708, 4-5=-648/665
BOT CHORD 1-7=-837/783, 6-7=-851/792, 5-6=-54/40
WEBS 2-7=-407/242, 2-6=-338/348, 3-6=-190/93, 4-6=-561/559

NOTES
1) Unbalanced roof live loads have been considered for this design.
2) Wind: ASCE 7-98; 110mph (3-second gust); h=20ft; TCDL=4.2psf; BCDL=3.0psf; Category II; Exp B; enclosed; MWFRS gable end zone and C-C Exterior(2) zone; porch left and right exposed; Lumber DOL=1.60 plate grip DOL=1.60. This truss is designed for C-C for members and forces, and for MWFRS for reactions specified.
3) Provide adequate drainage to prevent water ponding.
4) Provide mechanical connection (by others) of truss to bearing plate capable of withstanding 413 lb uplift at joint 1 and 408 lb uplift at joint 5.

LOAD CASE(S) Standard

SEPTEMBER 21, 2005 TRUSS DESIGN ENGINEER:
THOMAS E. MILLER PE 56877, BYRON K. ANDERSON PE 60987
STRUCTURAL ENGINEERING AND INSPECTIONS, INC. EB 9196
16105 N. FLORIDA AVE. STE B, LUTZ, FL 33549

Job	Truss	Truss Type	Qty	Ply	Dwg.#092105593
L130833	T29	SPECIAL	1	1	Job Reference (optional)

Builders FirstSource, Lake City, Fl 32055

6.200 s Jul 13 2005 MiTek Industries, Inc. Tue Sep 20 17:51:16 2005 Page 1

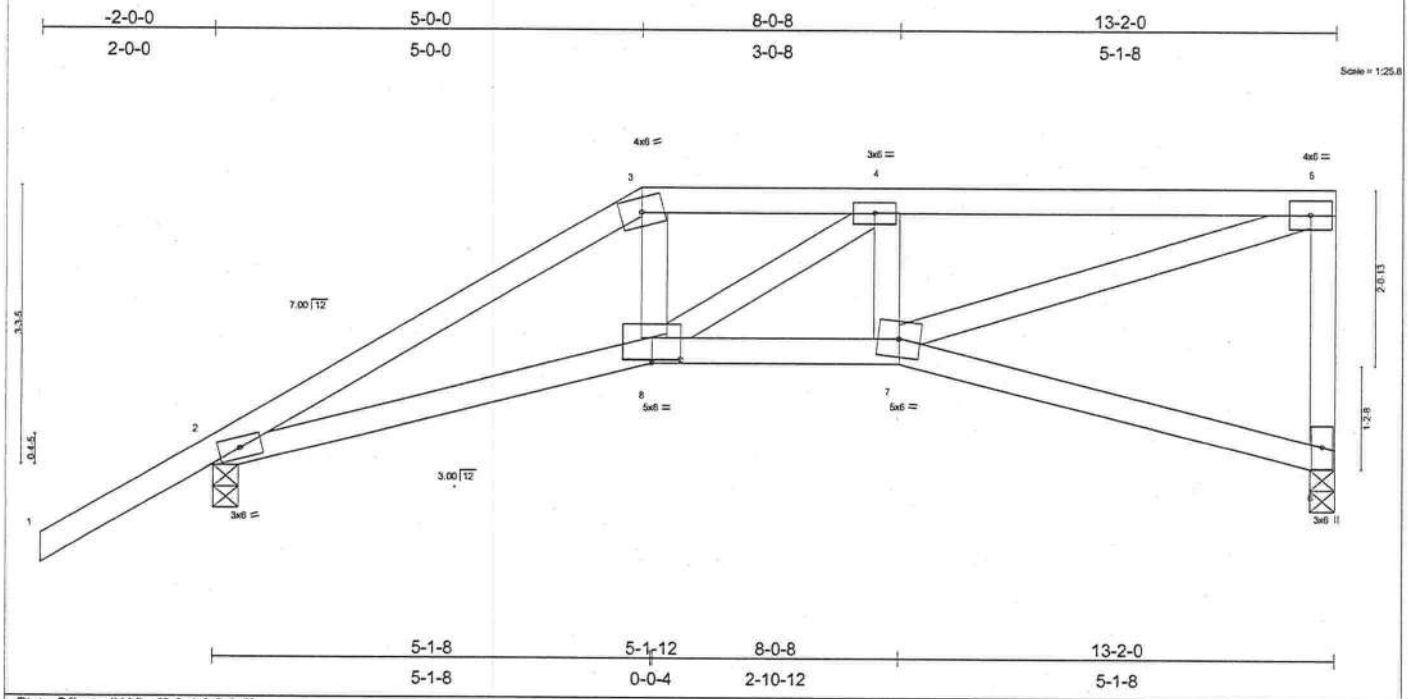

Plate Offsets (X,Y): [8:0-4-0,0-0-8]

LOADING (psf)		SPACING	2-0-0	CSI		DEFL	in	(loc)	l/defl	L/d	PLATES	GRIP
TCLL	20.0	Plates Increase	1.25	TC	0.66	Vert(LL)	0.08	7-8	>999	240	MT20	244/190
TCDL	7.0	Lumber Increase	1.25	BC	0.43	Vert(TL)	-0.12	7-8	>999	180		
BCLL	10.0	Rep Stress Incr	NO	WB	0.55	Horz(TL)	0.08	6	n/a	n/a		
BCDL	5.0	Code FBC2001/TPI2002		(Matrix)							Weight: 65 lb	

LUMBER
TOP CHORD 2 X 4 SYP No.2D
BOT CHORD 2 X 4 SYP No.2D
WEBS 2 X 4 SYP No.3

BRACING
TOP CHORD Structural wood sheathing directly applied or 4-5-1 oc purlins, except end verticals.
BOT CHORD Rigid ceiling directly applied or 6-9-13 oc bracing.

REACTIONS (lb/size) 6=939/0-3-8, 2=956/0-3-8
Max Horz 2=210(load case 4)
Max Uplift6=-484(load case 2), 2=-475(load case 4)

FORCES (lb) - Maximum Compression/Maximum Tension
TOP CHORD 1-2=0/53, 2-3=-2060/961, 3-4=-1758/876, 4-5=-1723/874, 5-6=-821/507
BOT CHORD 2-8=-875/1756, 7-8=-903/1754, 6-7=-56/128
WEBS 3-8=-408/808, 4-8=-62/183, 4-7=-372/348, 5-7=-874/1724

NOTES
1) Wind: ASCE 7-98; 110mph (3-second gust); h=20ft; TCDL=4.2psf; BCDL=3.0psf; Category II; Exp B; enclosed; MWFRS gable end zone; Lumber DOL=1.60 plate grip DOL=1.60.
2) Provide adequate drainage to prevent water ponding.
3) Bearing at joint(s) 6, 2 considers parallel to grain value using ANSI/TPI 1 angle to grain formula. Building designer should verify capacity of bearing surface.
4) Provide mechanical connection (by others) of truss to bearing plate capable of withstanding 484 lb uplift at joint 6 and 475 lb uplift at joint 2.
5) Girder carries hip end with 0-0-0 right side setback, 5-0-0 left side setback, and 5-0-0 end setback.
6) Hanger(s) or other connection device(s) shall be provided sufficient to support concentrated load(s) 245 lb down and 170 lb up at 5-1-12 on bottom chord. The design/selection of such connection device(s) is the responsibility of others.
7) In the LOAD CASE(S) section, loads applied to the face of the truss are noted as front (F) or back (B).

LOAD CASE(S) Standard
1) Regular: Lumber Increase=1.25, Plate Increase=1.25
Uniform Loads (plf)
Vert: 1-3=-54, 3-5=-91(F=-37), 2-8=-30, 7-8=-50(F=-20), 6-7=-50(F=-20)
Concentrated Loads (lb)
Vert: 8=-245(F)

SEPTEMBER 21, 2005 TRUSS DESIGN ENGINEER:
THOMAS E. MILLER PE 56877, BYRON K. ANDERSON PE 60987
STRUCTURAL ENGINEERING AND INSPECTIONS, INC. EB 9196
16105 N. FLORIDA AVE. STE B, LUTZ, FL 33549

Job	Truss	Truss Type	Qty	Ply	Dwg.#092105594
L130833	T30	SPECIAL	1	1	Job Reference (optional)

Builders FirstSource, Lake City, Fl 32055

6.200 s Jul 13 2005 MiTek Industries, Inc. Tue Sep 20 17:51:16 2005 Page 1

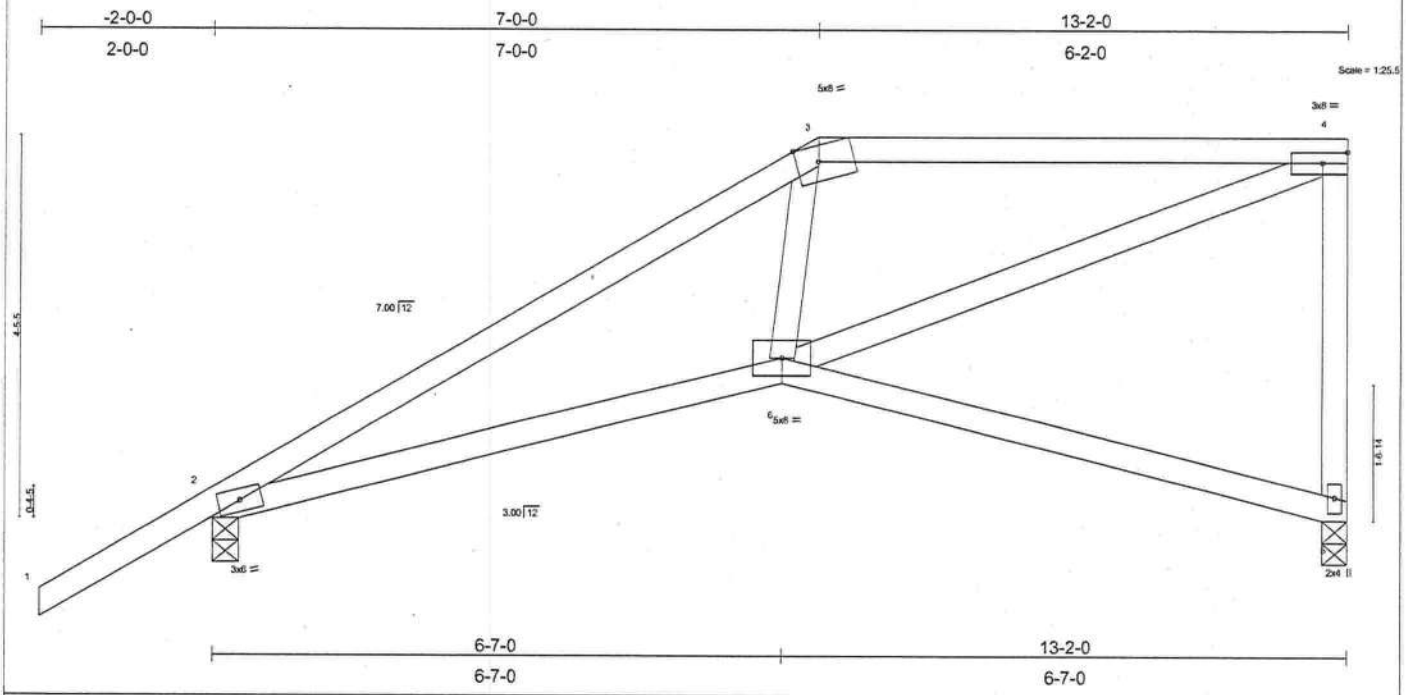

Plate Offsets (X,Y): [3:0-3-1,Edge]

LOADING (psf)		SPACING	2-0-0	CSI		DEFL	in	(loc)	l/defl	L/d	PLATES	GRIP
TCLL	20.0	Plates Increase	1.25	TC	0.37	Vert(LL)	-0.07	2-6	>999	240	MT20	244/190
TCDL	7.0	Lumber Increase	1.25	BC	0.34	Vert(TL)	-0.11	2-6	>999	180		
BCLL	10.0	Rep Stress Incr	YES	WB	0.35	Horz(TL)	0.04	5	n/a	n/a		
BCDL	5.0	Code FBC2001/TPI2002		(Matrix)							Weight: 64 lb	

LUMBER
TOP CHORD 2 X 4 SYP No.2D
BOT CHORD 2 X 4 SYP No.2D
WEBS 2 X 4 SYP No.3

BRACING
TOP CHORD Structural wood sheathing directly applied or 5-11-8 oc purlins, except end verticals.
BOT CHORD Rigid ceiling directly applied or 10-0-0 oc bracing.

REACTIONS (lb/size) 5=531/0-3-8, 2=666/0-3-8
Max Horz 2=263(load case 5)
Max Uplift5=-183(load case 4), 2=-278(load case 5)

FORCES (lb) - Maximum Compression/Maximum Tension
TOP CHORD 1-2=0/53, 2-3=-1069/363, 3-4=-816/407, 4-5=-451/270
BOT CHORD 2-6=-408/890, 5-6=-33/68
WEBS 3-6=0/129, 4-6=-421/833

NOTES
1) Wind: ASCE 7-98; 110mph (3-second gust); h=20ft; TCDL=4.2psf; BCDL=3.0psf; Category II; Exp B; enclosed; MWFRS gable end zone and C-C Exterior(2) zone; Lumber DOL=1.60 plate grip DOL=1.60. This truss is designed for C-C for members and forces, and for MWFRS for reactions specified.
2) Provide adequate drainage to prevent water ponding.
3) Bearing at joint(s) 5, 2 considers parallel to grain value using ANSI/TPI 1 angle to grain formula. Building designer should verify capacity of bearing surface.
4) Provide mechanical connection (by others) of truss to bearing plate capable of withstanding 183 lb uplift at joint 5 and 278 lb uplift at joint 2.

LOAD CASE(S) Standard

SEPTEMBER 21, 2005 TRUSS DESIGN ENGINEER:
THOMAS E. MILLER PE 56877, BYRON K. ANDERSON PE 60987
STRUCTURAL ENGINEERING AND INSPECTIONS, INC. EB 9196
16105 N. FLORIDA AVE. STE B, LUTZ, FL 33549

Job	Truss	Truss Type	Qty	Ply	Dwg.#092105595
L130833	T31	SPECIAL	1	1	Job Reference (optional)

Builders FirstSource, Lake City, Fl 32055

6.200 s Jul 13 2005 MiTek Industries, Inc. Tue Sep 20 17:51:17 2005 Page 1

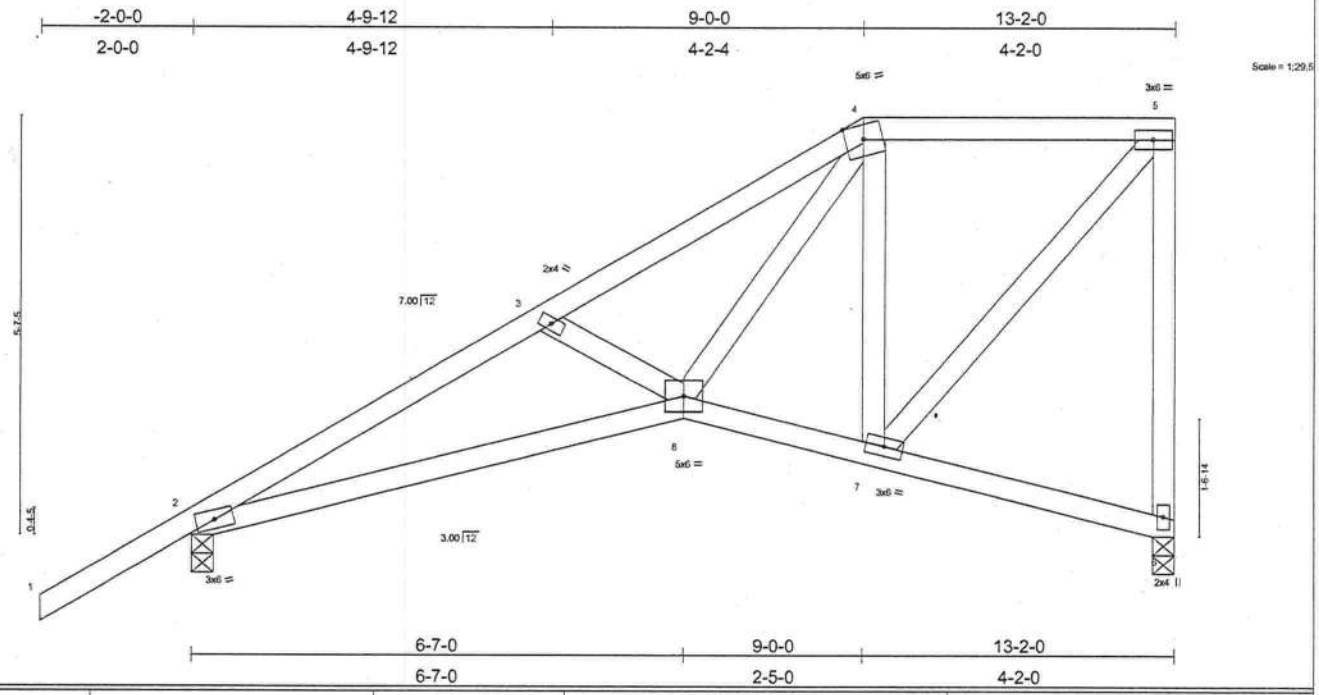

LOADING (psf)		SPACING	2-0-0	CSI		DEFL	in	(loc)	l/defl	L/d	PLATES	GRIP
TCLL	20.0	Plates Increase	1.25	TC	0.29	Vert(LL)	-0.06	2-8	>999	240	MT20	244/190
TCDL	7.0	Lumber Increase	1.25	BC	0.25	Vert(TL)	-0.10	2-8	>999	180		
BCLL	10.0	Rep Stress Incr	YES	WB	0.22	Horz(TL)	0.04	6	n/a	n/a		
BCDL	5.0	Code FBC2001/TPI2002		(Matrix)							Weight: 77 lb	

LUMBER
TOP CHORD 2 X 4 SYP No.2D
BOT CHORD 2 X 4 SYP No.2D
WEBS 2 X 4 SYP No.3

BRACING
TOP CHORD Structural wood sheathing directly applied or 6-0-0 oc purlins, except end verticals.
BOT CHORD Rigid ceiling directly applied or 9-0-6 oc bracing.

REACTIONS (lb/size) 6=531/0-3-8, 2=666/0-3-8
Max Horz 2=317(load case 5)
Max Uplift6=-175(load case 5), 2=-274(load case 5)

FORCES (lb) - Maximum Compression/Maximum Tension
TOP CHORD 1-2=0/53, 2-3=-1132/394, 3-4=-908/324, 4-5=-347/181, 5-6=-473/274
BOT CHORD 2-8=-513/962, 7-8=-193/384, 6-7=-9/27
WEBS 3-8=-210/210, 4-8=-261/686, 4-7=-386/251, 5-7=-266/503

NOTES
1) Wind: ASCE 7-98; 110mph (3-second gust); h=20ft; TCDL=4.2psf; BCDL=3.0psf; Category II; Exp B; enclosed; MWFRS gable end zone and C-C Exterior(2) zone; Lumber DOL=1.60 plate grip DOL=1.60. This truss is designed for C-C for members and forces, and for MWFRS for reactions specified.
2) Provide adequate drainage to prevent water ponding.
3) Bearing at joint(s) 6, 2 considers parallel to grain value using ANSI/TPI 1 angle to grain formula. Building designer should verify capacity of bearing surface.
4) Provide mechanical connection (by others) of truss to bearing plate capable of withstanding 175 lb uplift at joint 6 and 274 lb uplift at joint 2.

LOAD CASE(S) Standard

SEPTEMBER 21, 2005 TRUSS DESIGN ENGINEER:
THOMAS E. MILLER PE 56877, BYRON K. ANDERSON PE 60987
STRUCTURAL ENGINEERING AND INSPECTIONS, INC. EB 9196
16105 N. FLORIDA AVE. STE B, LUTZ, FL 33549

Job	Truss	Truss Type	Qty	Ply	
L130833	T32	SPECIAL	1	1	Job Reference (optional)

Dwg.#092105596

Builders FirstSource, Lake City, Fl 32055

6.200 s Jul 13 2005 MiTek Industries, Inc. Tue Sep 20 17:51:18 2005 Page 1

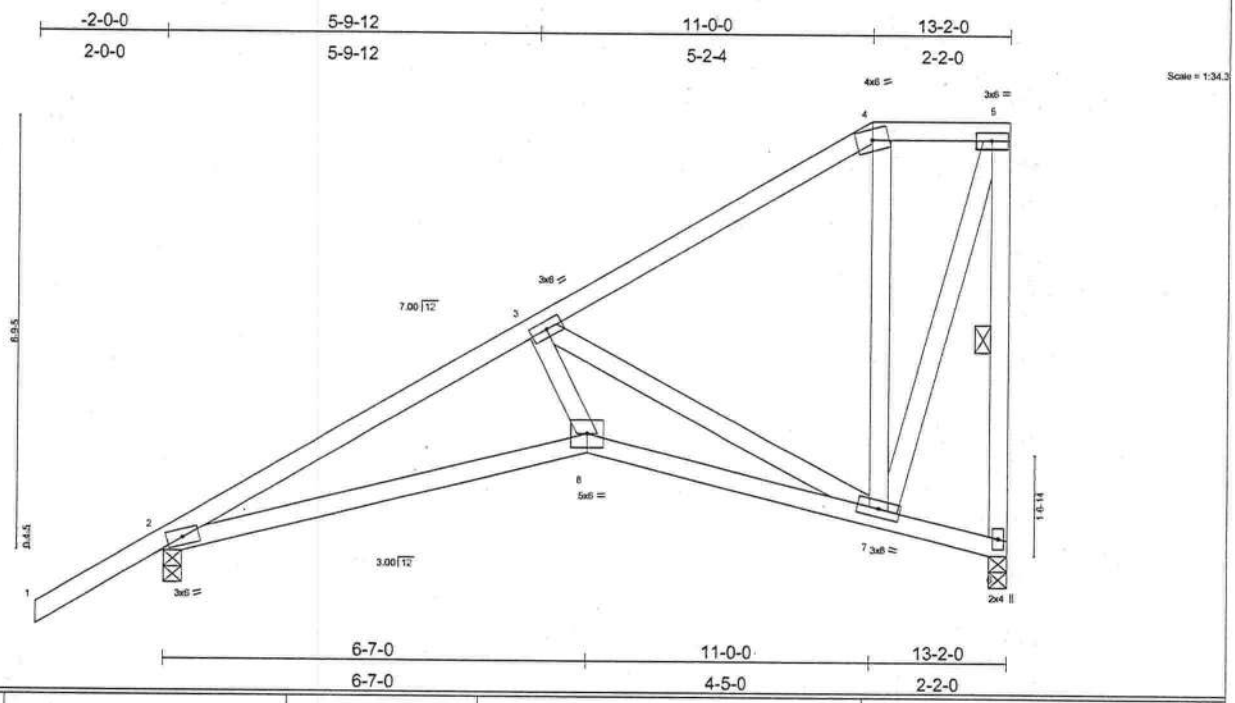

LOADING (psf)		SPACING	2-0-0	CSI		DEFL	in	(loc)	l/defl	L/d	PLATES	GRIP
TCLL	20.0	Plates Increase	1.25	TC	0.22	Vert(LL)	-0.08	2-8	>999	240	MT20	244/190
TCDL	7.0	Lumber Increase	1.25	BC	0.27	Vert(TL)	-0.14	2-8	>999	180		
BCLL	10.0	Rep Stress Incr	YES	WB	0.76	Horz(TL)	0.07	6	n/a	n/a		
BCDL	5.0	Code FBC2001/TPI2002		(Matrix)							Weight: 84 lb	

LUMBER
TOP CHORD 2 X 4 SYP No.2D
BOT CHORD 2 X 4 SYP No.2D
WEBS 2 X 4 SYP No.3

BRACING
TOP CHORD Structural wood sheathing directly applied or 6-0-0 oc purlins, except end verticals.
BOT CHORD Rigid ceiling directly applied or 8-4-14 oc bracing.
WEBS 1 Row at midpt 5-6

REACTIONS (lb/size) 6=531/0-3-8, 2=666/0-3-8
Max Horz 2=371(load case 5)
Max Uplift6=-230(load case 5), 2=-259(load case 5)

FORCES (lb) - Maximum Compression/Maximum Tension
TOP CHORD 1-2=0/53, 2-3=-1093/316, 3-4=-264/38, 4-5=-160/88, 5-6=-516/279
BOT CHORD 2-8=-494/920, 7-8=-594/1242, 6-7=-1/12
WEBS 3-8=-235/758, 3-7=-1168/559, 4-7=-140/172, 5-7=-294/530

NOTES
1) Wind: ASCE 7-98; 110mph (3-second gust); h=20ft; TCDL=4.2psf; BCDL=3.0psf; Category II; Exp B; enclosed; MWFRS gable end zone and C-C Exterior(2) zone; Lumber DOL=1.60 plate grip DOL=1.60. This truss is designed for C-C for members and forces, and for MWFRS for reactions specified.
2) Provide adequate drainage to prevent water ponding.
3) Bearing at joint(s) 6, 2 considers parallel to grain value using ANSI/TPI 1 angle to grain formula. Building designer should verify capacity of bearing surface.
4) Provide mechanical connection (by others) of truss to bearing plate capable of withstanding 230 lb uplift at joint 6 and 259 lb uplift at joint 2.

LOAD CASE(S) Standard

SEPTEMBER 21, 2005 TRUSS DESIGN ENGINEER:
THOMAS E. MILLER PE 56877, BYRON K. ANDERSON PE 60987
STRUCTURAL ENGINEERING AND INSPECTIONS, INC. EB 9196
16105 N. FLORIDA AVE. STE B, LUTZ, FL 33549

Job	Truss	Truss Type	Qty	Ply	Dwg.#092105597
L130833	T33	COMMON	1	1	Job Reference (optional)

Builders FirstSource, Lake City, Fl 32055

6.200 s Jul 13 2005 MiTek Industries, Inc. Tue Sep 20 17:51:18 2005 Page 1

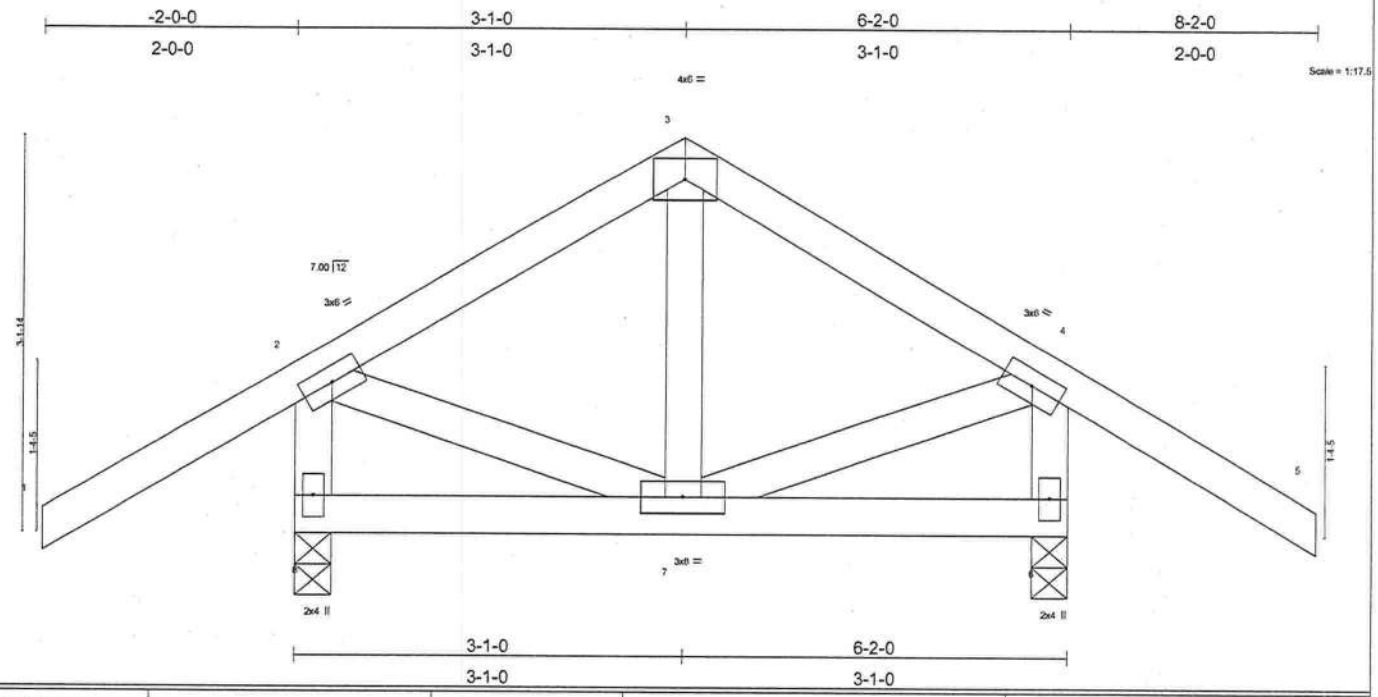

LOADING (psf)		SPACING	2-0-0	CSI		DEFL	in	(loc)	l/defl	L/d	PLATES	GRIP
TCLL	20.0	Plates Increase	1.25	TC	0.27	Vert(LL)	-0.00	6-7	>999	240	MT20	244/190
TCDL	7.0	Lumber Increase	1.25	BC	0.05	Vert(TL)	-0.00	6-7	>999	180		
BCLL	10.0	Rep Stress Incr	YES	WB	0.03	Horz(TL)	0.00	6	n/a	n/a		
BCDL	5.0	Code FBC2001/TPI2002		(Matrix)							Weight: 42 lb	

LUMBER
TOP CHORD 2 X 4 SYP No.2D
BOT CHORD 2 X 4 SYP No.2D
WEBS 2 X 4 SYP No.3 *Except*
W1 2 X 4 SYP No.2D, W1 2 X 4 SYP No.2D

BRACING
TOP CHORD Structural wood sheathing directly applied or 6-0-0 oc purlins, except end verticals.
BOT CHORD Rigid ceiling directly applied or 10-0-0 oc bracing.

REACTIONS (lb/size) 8=363/0-3-8, 6=363/0-3-8
Max Horz 8=123(load case 4)
Max Uplift8=-200(load case 5), 6=-200(load case 6)

FORCES (lb) - Maximum Compression/Maximum Tension
TOP CHORD 1-2=0/58, 2-3=-170/90, 3-4=-170/90, 4-5=0/58, 2-8=-328/250, 4-6=-328/250
BOT CHORD 7-8=-107/111, 6-7=-13/26
WEBS 3-7=-68/47, 2-7=-5/126, 4-7=-5/126

NOTES
1) Unbalanced roof live loads have been considered for this design.
2) Wind: ASCE 7-98; 110mph (3-second gust); h=20ft; TCDL=4.2psf; BCDL=3.0psf; Category II; Exp B; enclosed; MWFRS gable end zone and C-C Exterior(2) zone; end vertical left and right exposed; Lumber DOL=1.60 plate grip DOL=1.60. This truss is designed for C-C for members and forces, and for MWFRS for reactions specified.
3) Provide mechanical connection (by others) of truss to bearing plate capable of withstanding 200 lb uplift at joint 8 and 200 lb uplift at joint 6.

LOAD CASE(S) Standard

SEPTEMBER 21, 2005 TRUSS DESIGN ENGINEER:
THOMAS E. MILLER PE 56877, BYRON K. ANDERSON PE 60987
STRUCTURAL ENGINEERING AND INSPECTIONS, INC. EB 9196
16105 N. FLORIDA AVE. STE B, LUTZ, FL 33549

Job	Truss	Truss Type	Qty	Ply	
L130833	T33G	COMMON	1	1	Dwg.#092105598

Job Reference (optional)

Builders FirstSource, Lake City, Fl 32055

6.200 s Jul 13 2005 MiTek Industries, Inc. Tue Sep 20 17:51:19 2005 Page 1

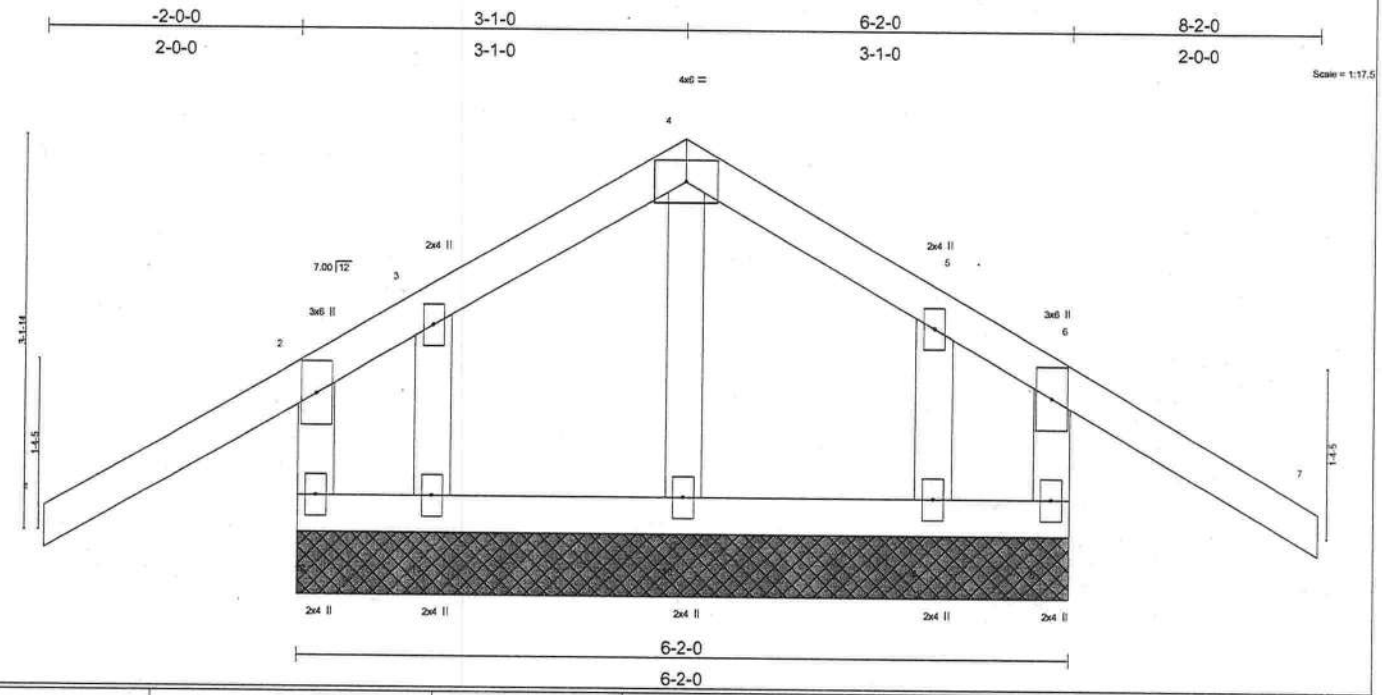

LOADING (psf)		SPACING	2-0-0	CSI		DEFL	in	(loc)	l/defl	L/d	PLATES	GRIP
TCLL	20.0	Plates Increase	1.25	TC	0.26	Vert(LL)	-0.03	7	n/r	90	MT20	244/190
TCDL	7.0	Lumber Increase	1.25	BC	0.05	Vert(TL)	-0.05	7	n/r	80		
BCLL	10.0	Rep Stress Incr	YES	WB	0.04	Horz(TL)	0.00	6	n/a	n/a		
BCDL	5.0	Code FBC2001/TPI2002		(Matrix)							Weight: 38 lb	

LUMBER
TOP CHORD 2 X 4 SYP No.2D
BOT CHORD 2 X 4 SYP No.2D
WEBS 2 X 4 SYP No.2D
OTHERS 2 X 4 SYP No.3

BRACING
TOP CHORD Structural wood sheathing directly applied or 6-2-0 oc purlins, except end verticals.
BOT CHORD Rigid ceiling directly applied or 6-0-0 oc bracing.

REACTIONS (lb/size) 12=164/6-2-0, 8=164/6-2-0, 10=254/6-2-0, 11=72/6-2-0, 9=72/6-2-0
Max Horz 12=90(load case 5)
Max Uplift12=-173(load case 5), 8=-183(load case 6), 10=-24(load case 5), 11=-75(load case 4), 9=-70(load case 3)
Max Grav 12=206(load case 7), 8=206(load case 8), 10=254(load case 1), 11=98(load case 3), 9=93(load case 4)

FORCES (lb) - Maximum Compression/Maximum Tension
TOP CHORD 1-2=0/58, 2-3=-30/58, 3-4=-1/100, 4-5=0/100, 5-6=-25/53, 6-7=0/58, 2-12=-196/255, 6-8=-196/255
BOT CHORD 11-12=-60/120, 10-11=-60/120, 9-10=-60/120, 8-9=-60/120
WEBS 4-10=-193/78, 3-11=-73/50, 5-9=-70/48

NOTES
1) Unbalanced roof live loads have been considered for this design.
2) Wind: ASCE 7-98; 110mph (3-second gust); h=20ft; TCDL=4.2psf; BCDL=3.0psf; Category II; Exp B; enclosed; MWFRS gable end zone and C-C Exterior(2) zone; Lumber DOL=1.60 plate grip DOL=1.60. This truss is designed for C-C for members and forces, and for MWFRS for reactions specified.
3) Truss designed for wind loads in the plane of the truss only. For studs exposed to wind (normal to the face), see MiTek "Standard Gable End Detail"
4) Gable requires continuous bottom chord bearing.
5) Truss to be fully sheathed from one face or securely braced against lateral movement (i.e. diagonal web).
6) Gable studs spaced at 2-0-0 oc.
7) Provide mechanical connection (by others) of truss to bearing plate capable of withstanding 173 lb uplift at joint 12, 183 lb uplift at joint 8, 24 lb uplift at joint 10, 75 lb uplift at joint 11 and 70 lb uplift at joint 9.

LOAD CASE(S) Standard

SEPTEMBER 21, 2005 TRUSS DESIGN ENGINEER:
THOMAS E. MILLER PE 56877, BYRON K. ANDERSON PE 60987
STRUCTURAL ENGINEERING AND INSPECTIONS, INC. EB 9196
16105 N. FLORIDA AVE. STE B, LUTZ, FL 33549

Job	Truss	Truss Type	Qty	Ply	Dwg.#092105599
L130833	T34	COMMON	1	1	Job Reference (optional)

Builders FirstSource, Lake City, Fl 32055

6.200 s Jul 13 2005 MiTek Industries, Inc. Tue Sep 20 17:51:20 2005 Page 1

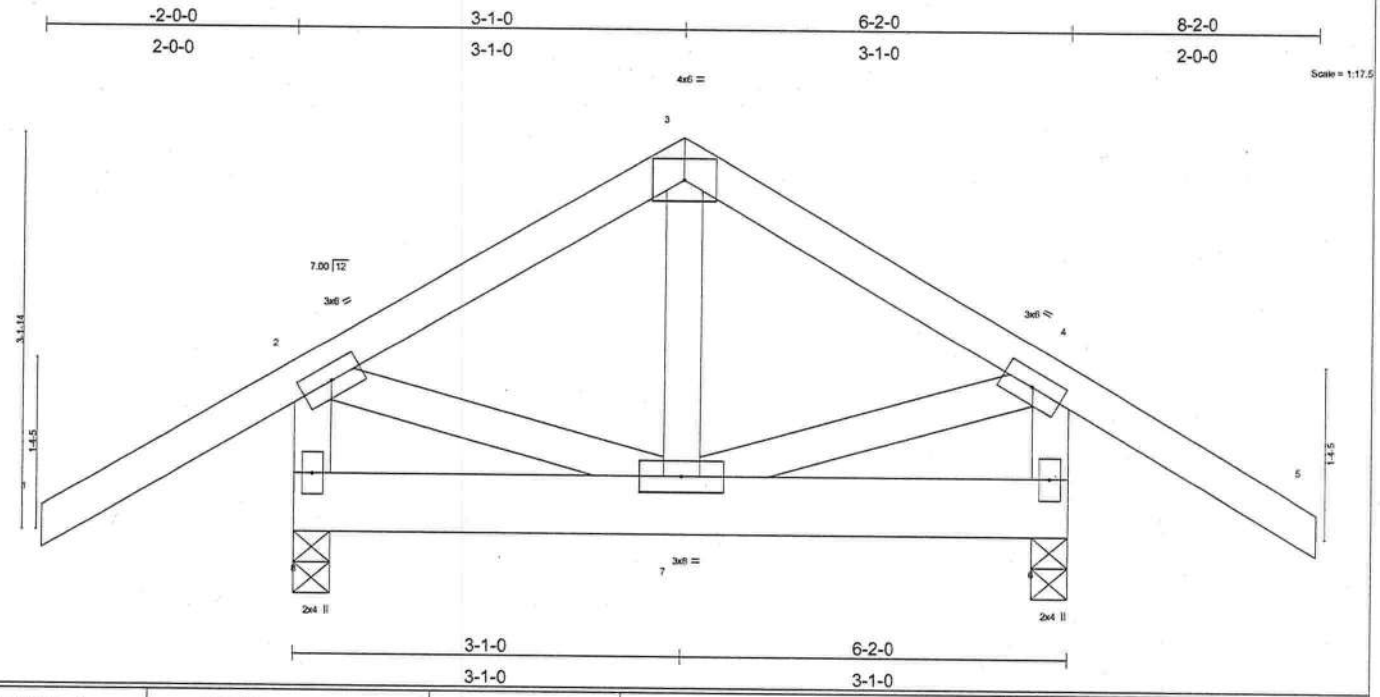

LOADING (psf)		SPACING	2-0-0	CSI		DEFL	in	(loc)	l/defl	L/d	PLATES	GRIP
TCLL	20.0	Plates Increase	1.25	TC	0.28	Vert(LL)	-0.00	7	>999	240	MT20	244/190
TCDL	7.0	Lumber Increase	1.25	BC	0.08	Vert(TL)	-0.01	6-7	>999	180		
BCLL	10.0	Rep Stress Incr	NO	WB	0.09	Horz(TL)	-0.00	6	n/a	n/a		
BCDL	5.0	Code FBC2001/TPI2002		(Matrix)							Weight: 46 lb	

LUMBER
TOP CHORD 2 X 4 SYP No.2D
BOT CHORD 2 X 6 SYP No.1D
WEBS 2 X 4 SYP No.3 *Except*
W1 2 X 4 SYP No.2D, W1 2 X 4 SYP No.2D

BRACING
TOP CHORD Structural wood sheathing directly applied or 6-0-0 oc purlins, except end verticals.
BOT CHORD Rigid ceiling directly applied or 10-0-0 oc bracing.

REACTIONS (lb/size) 8=653/0-3-8, 6=653/0-3-8
Max Horz 8=90(load case 4)
Max Uplift8=-315(load case 4), 6=-315(load case 5)

FORCES (lb) - Maximum Compression/Maximum Tension
TOP CHORD 1-2=0/58, 2-3=-383/136, 3-4=-383/136, 4-5=0/58, 2-8=-498/276, 4-6=-498/276
BOT CHORD 7-8=-90/90, 6-7=0/0
WEBS 3-7=-105/261, 2-7=-67/295, 4-7=-67/295

NOTES
1) Unbalanced roof live loads have been considered for this design.
2) Wind: ASCE 7-98; 110mph (3-second gust); h=20ft; TCDL=4.2psf; BCDL=3.0psf; Category II; Exp B; enclosed; MWFRS gable end zone; Lumber DOL=1.60 plate grip DOL=1.60.
3) Provide mechanical connection (by others) of truss to bearing plate capable of withstanding 315 lb uplift at joint 8 and 315 lb uplift at joint 6.
4) Girder carries tie-in span(s): 7-0-0 from 0-0-0 to 6-2-0
5) In the LOAD CASE(S) section, loads applied to the face of the truss are noted as front (F) or back (B).

LOAD CASE(S) Standard
1) Regular: Lumber Increase=1.25, Plate Increase=1.25
Uniform Loads (plf)
Vert: 1-2=-54, 2-3=-54, 3-4=-54, 4-5=-54, 6-8=-129(F=-99)

SEPTEMBER 21, 2005 TRUSS DESIGN ENGINEER:
THOMAS E. MILLER PE 56877, BYRON K. ANDERSON PE 60987
STRUCTURAL ENGINEERING AND INSPECTIONS, INC. EB 9196
16105 N. FLORIDA AVE. STE B, LUTZ, FL 33549

Job	Truss	Truss Type	Qty	Ply	
L130833	CJ1V	MONO SCISSOR	2	1	Dwg.#092105600

Job Reference (optional)

Builders FirstSource, Lake City, Fl 32055

6.200 s Jul 13 2005 MiTek Industries, Inc. Tue Sep 20 17:50:39 2005 Page 1

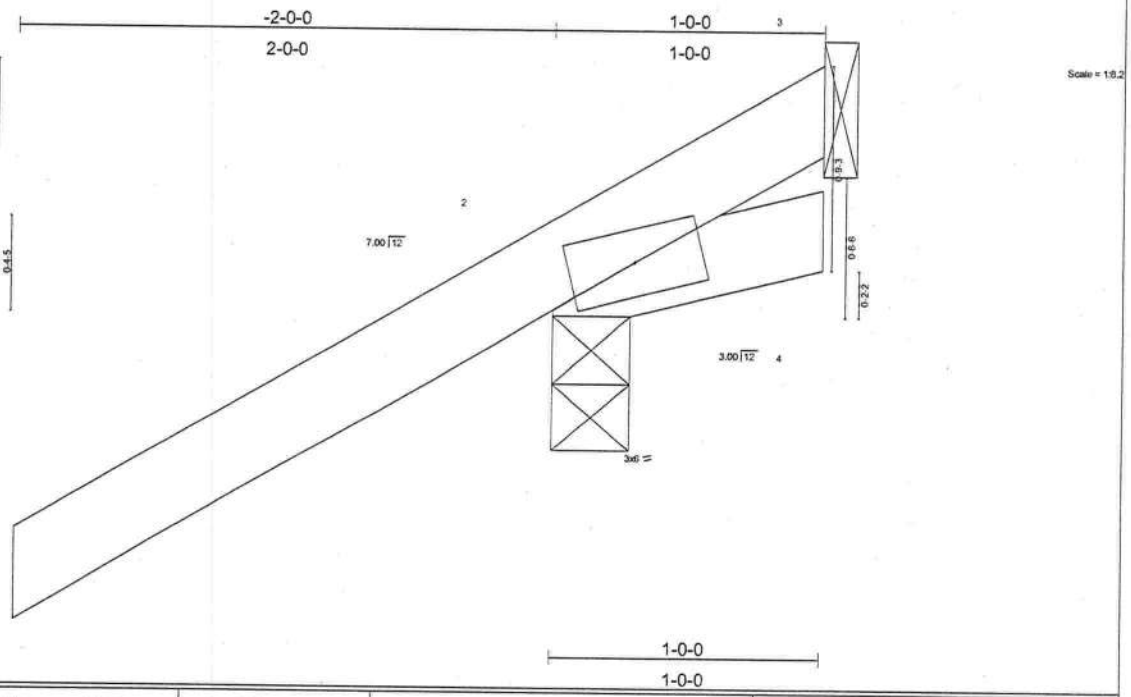

LOADING (psf)		SPACING	2-0-0	CSI		DEFL	in	(loc)	l/defl	L/d	PLATES	GRIP
TCLL	20.0	Plates Increase	1.25	TC	0.23	Vert(LL)	-0.01	4	>857	240	MT20	244/190
TCDL	7.0	Lumber Increase	1.25	BC	0.02	Vert(TL)	-0.01	4	>947	180		
BCLL	10.0	Rep Stress Incr	YES	WB	0.00	Horz(TL)	0.00	3	n/a	n/a		
BCDL	5.0	Code FBC2001/TPI2002		(Matrix)							Weight: 7 lb	

LUMBER
TOP CHORD 2 X 4 SYP No.2D
BOT CHORD 2 X 4 SYP No.2D

BRACING
TOP CHORD Structural wood sheathing directly applied or 1-0-0 oc purlins.
BOT CHORD Rigid ceiling directly applied or 6-0-0 oc bracing.

REACTIONS (lb/size) 2=266/0-3-8, 3=-75/Mechanical
Max Horz 2=100(load case 5)
Max Uplift2=-277(load case 5), 3=-75(load case 1)
Max Grav 2=266(load case 1), 3=132(load case 5)

FORCES (lb) - Maximum Compression/Maximum Tension
TOP CHORD 1-2=0/51, 2-3=-74/89
BOT CHORD 2-4=-7/0

NOTES
1) Wind: ASCE 7-98; 110mph (3-second gust); h=20ft; TCDL=4.2psf; BCDL=3.0psf; Category II; Exp B; enclosed; MWFRS gable end zone and C-C Exterior(2) zone; Lumber DOL=1.60 plate grip DOL=1.60. This truss is designed for C-C for members and forces, and for MWFRS for reactions specified.
2) Refer to girder(s) for truss to truss connections.
3) Bearing at joint(s) 2 considers parallel to grain value using ANSI/TPI 1 angle to grain formula. Building designer should verify capacity of bearing surface.
4) Provide mechanical connection (by others) of truss to bearing plate capable of withstanding 277 lb uplift at joint 2 and 75 lb uplift at joint 3.

LOAD CASE(S) Standard

SEPTEMBER 21, 2005 TRUSS DESIGN ENGINEER:
THOMAS E. MILLER PE 56877, BYRON K. ANDERSON PE 60987
STRUCTURAL ENGINEERING AND INSPECTIONS, INC. EB 9196
16105 N. FLORIDA AVE. STE B, LUTZ, FL 33549

Job	Truss	Truss Type	Qty	Ply	
L130833	CJ3	MONO TRUSS	8	1	Job Reference (optional)

Dwg.#092105601

Builders FirstSource, Lake City, Fl 32055

6.200 s Jul 13 2005 MiTek Industries, Inc. Tue Sep 20 17:50:40 2005 Page 1

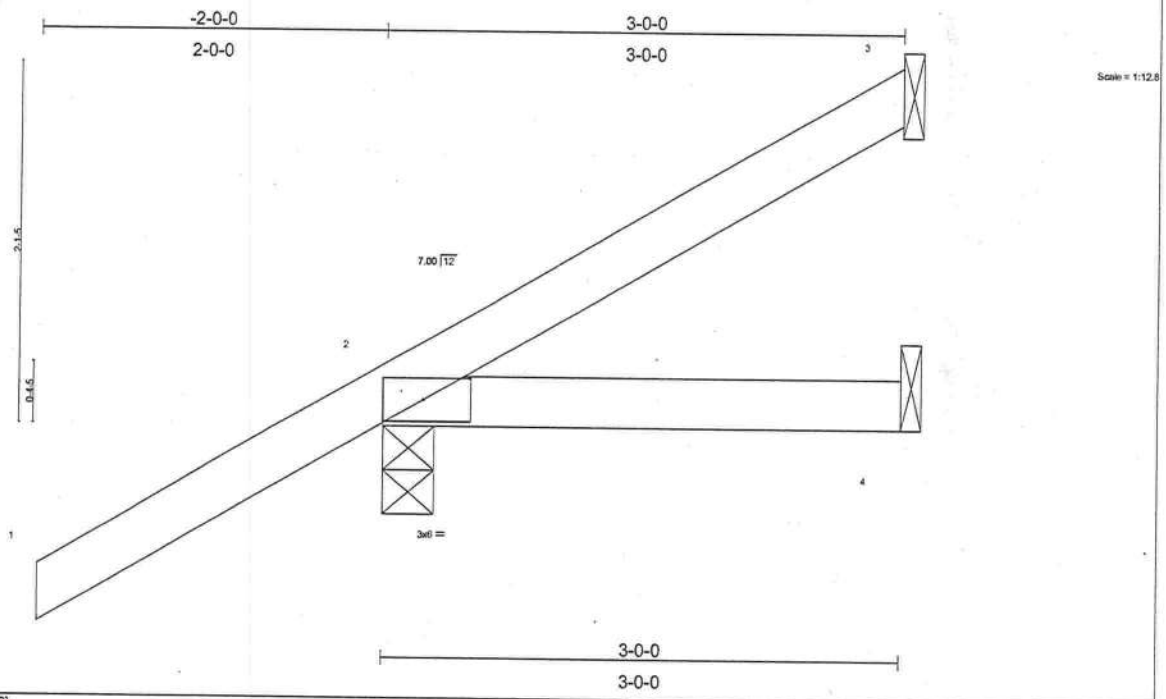

Plate Offsets (X,Y): [2:0-3-4,0-1-8]

LOADING (psf)		SPACING	2-0-0	CSI		DEFL	in	(loc)	l/defl	L/d	PLATES	GRIP
TCLL	20.0	Plates Increase	1.25	TC	0.25	Vert(LL)	-0.00	2-4	>999	240	MT20	244/190
TCDL	7.0	Lumber Increase	1.25	BC	0.05	Vert(TL)	-0.01	2-4	>999	180		
BCLL	10.0	Rep Stress Incr	YES	WB	0.00	Horz(TL)	-0.00	3	n/a	n/a		
BCDL	5.0	Code FBC2001/TPI2002		(Matrix)							Weight: 13 lb	

LUMBER
TOP CHORD 2 X 4 SYP No.2D
BOT CHORD 2 X 4 SYP No.2D

BRACING
TOP CHORD Structural wood sheathing directly applied or 3-0-0 oc purlins.
BOT CHORD Rigid ceiling directly applied or 10-0-0 oc bracing.

REACTIONS (lb/size) 3=31/Mechanical, 2=278/0-3-8, 4=42/Mechanical
Max Horz 2=154(load case 5)
Max Uplift3=-26(load case 4), 2=-200(load case 5)
Max Grav 3=31(load case 3), 2=278(load case 1), 4=42(load case 1)

FORCES (lb) - Maximum Compression/Maximum Tension
TOP CHORD 1-2=0/54, 2-3=-64/15
BOT CHORD 2-4=0/0

NOTES
1) Wind: ASCE 7-98; 110mph (3-second gust); h=20ft; TCDL=4.2psf; BCDL=3.0psf; Category II; Exp B; enclosed; MWFRS gable end zone and C-C Exterior(2) zone; Lumber DOL=1.60 plate grip DOL=1.60. This truss is designed for C-C for members and forces, and for MWFRS for reactions specified.
2) Refer to girder(s) for truss to truss connections.
3) Provide mechanical connection (by others) of truss to bearing plate capable of withstanding 26 lb uplift at joint 3 and 200 lb uplift at joint 2.

LOAD CASE(S) Standard

SEPTEMBER 21, 2005 TRUSS DESIGN ENGINEER:
THOMAS E. MILLER PE 56877, BYRON K. ANDERSON PE 60987
STRUCTURAL ENGINEERING AND INSPECTIONS, INC. EB 9196
16105 N. FLORIDA AVE. STE B, LUTZ, FL 33549

Job	Truss	Truss Type	Qty	Ply	
L130833	CJ3V	MONO SCISSOR	2	1	Dwg.#092105602

Builders FirstSource, Lake City, Fl 32055

Job Reference (optional)

6.200 s Jul 13 2005 MiTek Industries, Inc. Tue Sep 20 17:50:40 2005 Page 1

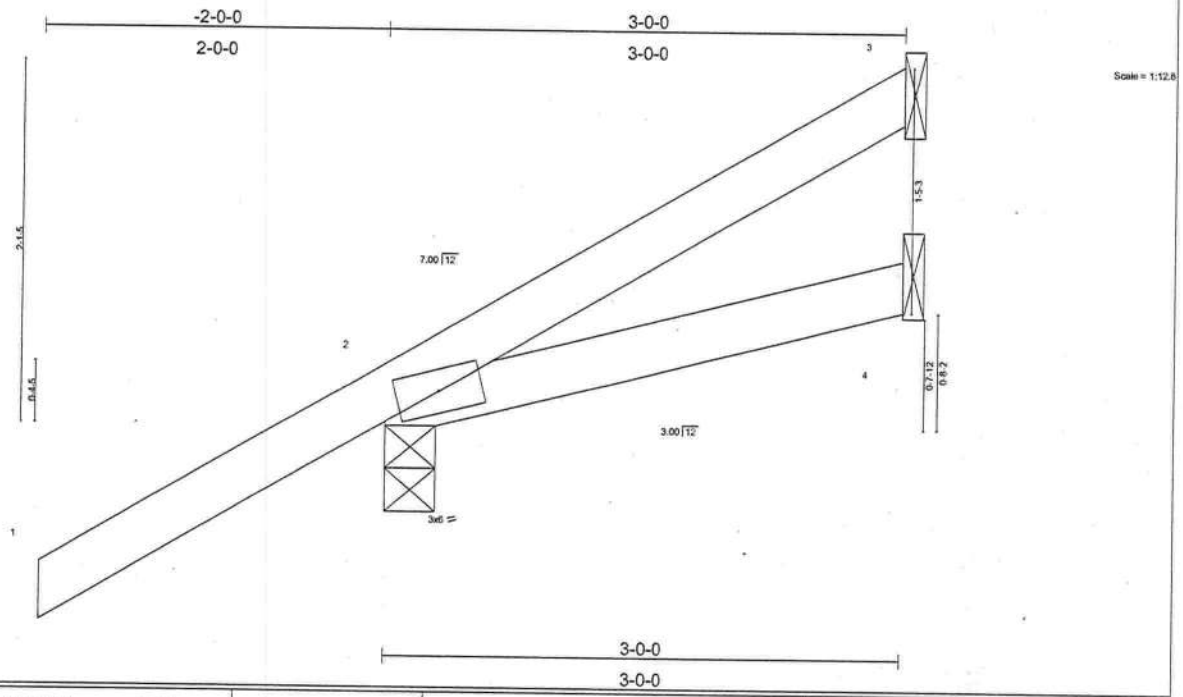

LOADING (psf)		SPACING	2-0-0	CSI		DEFL	in	(loc)	l/defl	L/d	PLATES	GRIP
TCLL	20.0	Plates Increase	1.25	TC	0.24	Vert(LL)	-0.00	2-4	>999	240	MT20	244/190
TCDL	7.0	Lumber Increase	1.25	BC	0.05	Vert(TL)	-0.01	2-4	>999	180		
BCLL	10.0	Rep Stress Incr	YES	WB	0.00	Horz(TL)	-0.00	3	n/a	n/a		
BCDL	5.0	Code FBC2001/TPI2002		(Matrix)							Weight: 14 lb	

LUMBER
TOP CHORD 2 X 4 SYP No.2D
BOT CHORD 2 X 4 SYP No.2D

BRACING
TOP CHORD Structural wood sheathing directly applied or 3-0-0 oc purlins.
BOT CHORD Rigid ceiling directly applied or 10-0-0 oc bracing.

REACTIONS (lb/size) 3=31/Mechanical, 2=278/0-3-8, 4=42/Mechanical
Max Horz 2=153(load case 5)
Max Uplift3=-27(load case 4), 2=-198(load case 5)
Max Grav 3=31(load case 3), 2=278(load case 1), 4=42(load case 1)

FORCES (lb) - Maximum Compression/Maximum Tension
TOP CHORD 1-2=0/52, 2-3=-65/15
BOT CHORD 2-4=-8/8

NOTES
1) Wind: ASCE 7-98; 110mph (3-second gust); h=20ft; TCDL=4.2psf; BCDL=3.0psf; Category II; Exp B; enclosed; MWFRS gable end zone and C-C Exterior(2) zone; Lumber DOL=1.60 plate grip DOL=1.60. This truss is designed for C-C for members and forces, and for MWFRS for reactions specified.
2) Refer to girder(s) for truss to truss connections.
3) Bearing at joint(s) 2 considers parallel to grain value using ANSI/TPI 1 angle to grain formula. Building designer should verify capacity of bearing surface.
4) Provide mechanical connection (by others) of truss to bearing plate capable of withstanding 27 lb uplift at joint 3 and 198 lb uplift at joint 2.

LOAD CASE(S) Standard

SEPTEMBER 21, 2005 TRUSS DESIGN ENGINEER:
THOMAS E. MILLER PE 56877, BYRON K. ANDERSON PE 60987
STRUCTURAL ENGINEERING AND INSPECTIONS, INC. EB 9196
16105 N. FLORIDA AVE. STE B, LUTZ, FL 33549

Job	Truss	Truss Type	Qty	Ply	
L130833	CJ5	MONO TRUSS	4	1	Job Reference (optional)

Dwg.#092105603

Builders FirstSource, Lake City, Fl 32055

6.200 s Jul 13 2005 MiTek Industries, Inc. Tue Sep 20 17:50:41 2005 Page 1

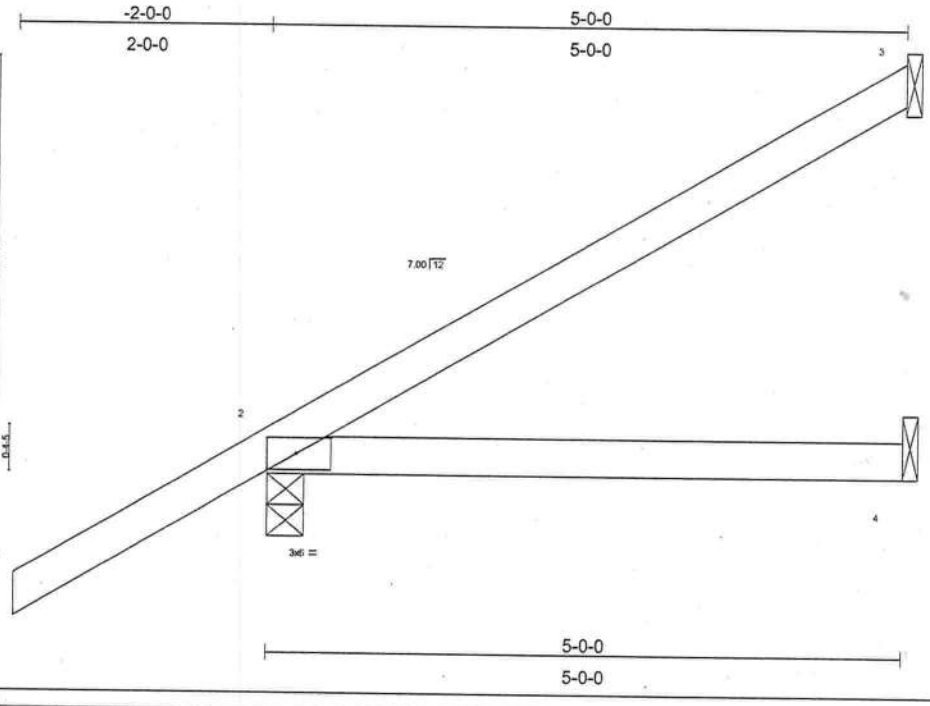

Plate Offsets (X,Y): [2:0-3-4,0-1-8]

LOADING (psf)		SPACING	2-0-0	CSI		DEFL	in	(loc)	l/defl	L/d	PLATES	GRIP
TCLL	20.0	Plates Increase	1.25	TC	0.25	Vert(LL)	-0.03	2-4	>999	240	MT20	244/190
TCDL	7.0	Lumber Increase	1.25	BC	0.14	Vert(TL)	-0.05	2-4	>999	180		
BCLL	10.0	Rep Stress Incr	YES	WB	0.00	Horz(TL)	-0.00	3	n/a	n/a		
BCDL	5.0	Code FBC2001/TPI2002		(Matrix)							Weight: 20 lb	

LUMBER
TOP CHORD 2 X 4 SYP No.2D
BOT CHORD 2 X 4 SYP No.2D

BRACING
TOP CHORD Structural wood sheathing directly applied or 5-0-0 oc purlins.
BOT CHORD Rigid ceiling directly applied or 10-0-0 oc bracing.

REACTIONS (lb/size) 3=103/Mechanical, 2=343/0-3-8, 4=72/Mechanical
Max Horz 2=207(load case 5)
Max Uplift3=-96(load case 5), 2=-191(load case 5)

FORCES (lb) - Maximum Compression/Maximum Tension
TOP CHORD 1-2=0/54, 2-3=-81/40
BOT CHORD 2-4=0/0

NOTES
1) Wind: ASCE 7-98; 110mph (3-second gust); h=20ft; TCDL=4.2psf; BCDL=3.0psf; Category II; Exp B; enclosed; MWFRS gable end zone and C-C Exterior(2) zone; Lumber DOL=1.60 plate grip DOL=1.60. This truss is designed for C-C for members and forces, and for MWFRS for reactions specified.
2) Refer to girder(s) for truss to truss connections.
3) Provide mechanical connection (by others) of truss to bearing plate capable of withstanding 96 lb uplift at joint 3 and 191 lb uplift at joint 2.

LOAD CASE(S) Standard

SEPTEMBER 21, 2005 TRUSS DESIGN ENGINEER:
THOMAS E. MILLER PE 56877, BYRON K. ANDERSON PE 60987
STRUCTURAL ENGINEERING AND INSPECTIONS, INC. EB 9196
16105 N. FLORIDA AVE. STE B, LUTZ, FL 33549

Job	Truss	Truss Type	Qty	Ply	
L130833	EJ5	MONO TRUSS	6	1	Job Reference (optional)

Dwg.#092105604

Builders FirstSource, Lake City, Fl 32055

6.200 s Jul 13 2005 MiTek Industries, Inc. Tue Sep 20 17:50:41 2005 Page 1

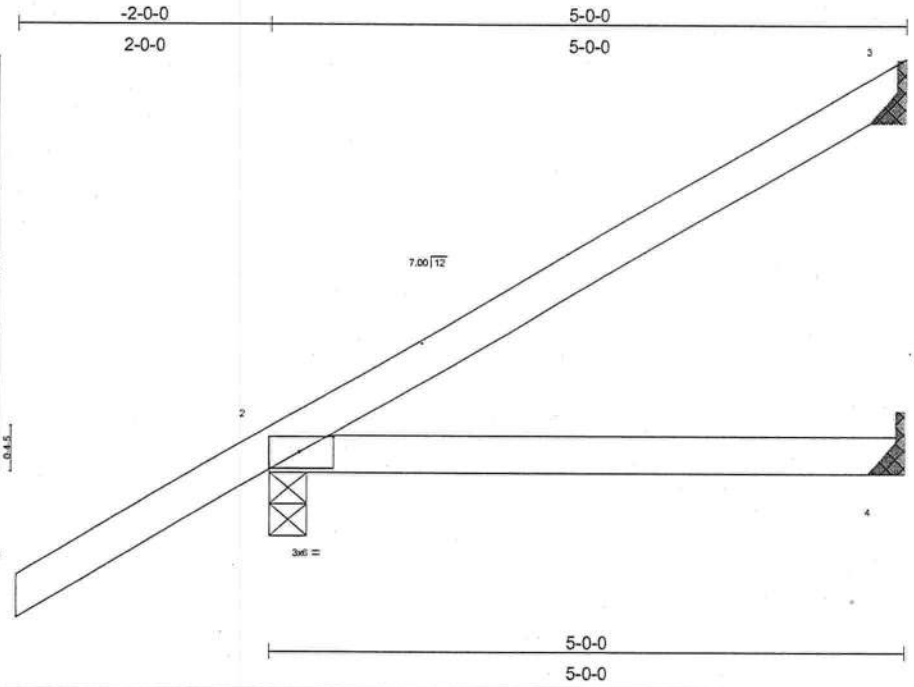

Plate Offsets (X,Y): [2:0-3-3,0-1-8]

LOADING (psf)		SPACING	2-0-0	CSI		DEFL	in	(loc)	l/defl	L/d	PLATES	GRIP
TCLL	20.0	Plates Increase	1.25	TC	0.25	Vert(LL)	-0.02	2-4	>999	240	MT20	244/190
TCDL	7.0	Lumber Increase	1.25	BC	0.14	Vert(TL)	-0.04	2-4	>999	180		
BCLL	10.0	Rep Stress Incr	YES	WB	0.00	Horz(TL)	-0.00	3	n/a	n/a		
BCDL	5.0	Code FBC2001/TPI2002		(Matrix)							Weight: 20 lb	

LUMBER
TOP CHORD 2 X 4 SYP No.2D
BOT CHORD 2 X 4 SYP No.2D

BRACING
TOP CHORD Structural wood sheathing directly applied or 5-0-0 oc purlins.
BOT CHORD Rigid ceiling directly applied or 10-0-0 oc bracing.

REACTIONS (lb/size) 3=101/Mechanical, 2=340/0-3-8, 4=71/Mechanical
Max Horz 2=205(load case 5)
Max Uplift3=-93(load case 5), 2=-191(load case 5)

FORCES (lb) - Maximum Compression/Maximum Tension
TOP CHORD 1-2=0/54, 2-3=-80/39
BOT CHORD 2-4=0/0

NOTES
1) Wind: ASCE 7-98; 110mph (3-second gust); h=20ft; TCDL=4.2psf; BCDL=3.0psf; Category II; Exp B; enclosed; MWFRS gable end zone and C-C Exterior(2) zone; Lumber DOL=1.60 plate grip DOL=1.60. This truss is designed for C-C for members and forces, and for MWFRS for reactions specified.
2) Refer to girder(s) for truss to truss connections.
3) Provide mechanical connection (by others) of truss to bearing plate capable of withstanding 93 lb uplift at joint 3 and 191 lb uplift at joint 2.

LOAD CASE(S) Standard

SEPTEMBER 21, 2005 TRUSS DESIGN ENGINEER:
THOMAS E. MILLER PE 56877, BYRON K. ANDERSON PE 60987
STRUCTURAL ENGINEERING AND INSPECTIONS, INC. EB 9196
16105 N. FLORIDA AVE. STE B, LUTZ, FL 33549

Job	Truss	Truss Type	Qty	Ply	Dwg.#092105605
L130833	EJ5V	SPECIAL	2	1	Job Reference (optional)

Builders FirstSource, Lake City, Fl 32055

6.200 s Jul 13 2005 MiTek Industries, Inc. Tue Sep 20 17:50:42 2005 Page 1

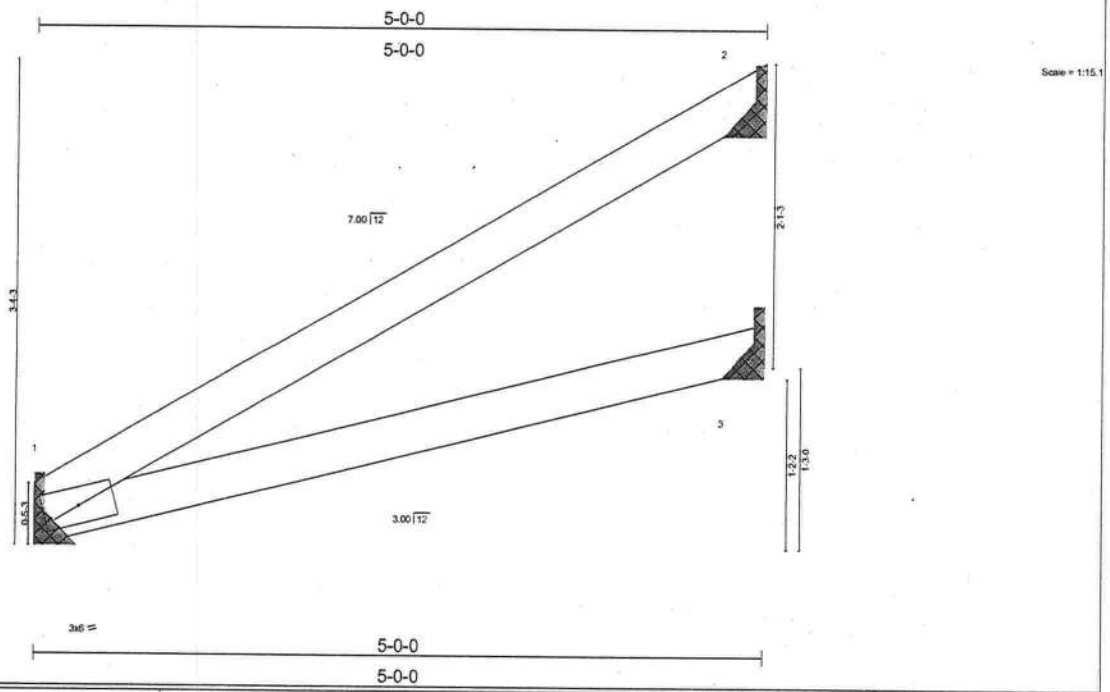

LOADING (psf)		SPACING	2-0-0	CSI		DEFL	in	(loc)	l/defl	L/d	PLATES	GRIP
TCLL	20.0	Plates Increase	1.25	TC	0.24	Vert(LL)	-0.03	1-3	>999	240	MT20	244/190
TCDL	7.0	Lumber Increase	1.25	BC	0.14	Vert(TL)	-0.04	1-3	>999	180		
BCLL	10.0	Rep Stress Incr	YES	WB	0.00	Horz(TL)	-0.00	2	n/a	n/a		
BCDL	5.0	Code FBC2001/TPI2002		(Matrix)							Weight: 17 lb	

LUMBER
TOP CHORD 2 X 4 SYP No.2D
BOT CHORD 2 X 4 SYP No.2D

BRACING
TOP CHORD Structural wood sheathing directly applied or 5-0-0 oc purlins.
BOT CHORD Rigid ceiling directly applied or 10-0-0 oc bracing.

REACTIONS (lb/size) 1=198/Mechanical, 2=127/Mechanical, 3=71/Mechanical
Max Horz 1=134(load case 5)
Max Uplift1=-33(load case 5), 2=-130(load case 5)

FORCES (lb) - Maximum Compression/Maximum Tension
TOP CHORD 1-2=-95/53
BOT CHORD 1-3=-14/14

NOTES
1) Wind: ASCE 7-98; 110mph (3-second gust); h=20ft; TCDL=4.2psf; BCDL=3.0psf; Category II; Exp B; enclosed; MWFRS gable end zone and C-C Exterior(2) zone; Lumber DOL=1.60 plate grip DOL=1.60. This truss is designed for C-C for members and forces, and for MWFRS for reactions specified.
2) Refer to girder(s) for truss to truss connections.
3) Provide mechanical connection (by others) of truss to bearing plate capable of withstanding 33 lb uplift at joint 1 and 130 lb uplift at joint 2.

LOAD CASE(S) Standard

SEPTEMBER 21, 2005 TRUSS DESIGN ENGINEER:
THOMAS E. MILLER PE 56877, BYRON K. ANDERSON PE 60987
STRUCTURAL ENGINEERING AND INSPECTIONS, INC. EB 9196
16105 N. FLORIDA AVE. STE B, LUTZ, FL 33549

Job	Truss	Truss Type	Qty	Ply	
L130833	EJ5X	SPECIAL	1	1	Job Reference (optional)

Dwg.#092105606

Builders FirstSource, Lake City, Fl 32055

6.200 s Jul 13 2005 MiTek Industries, Inc. Tue Sep 20 17:50:42 2005 Page 1

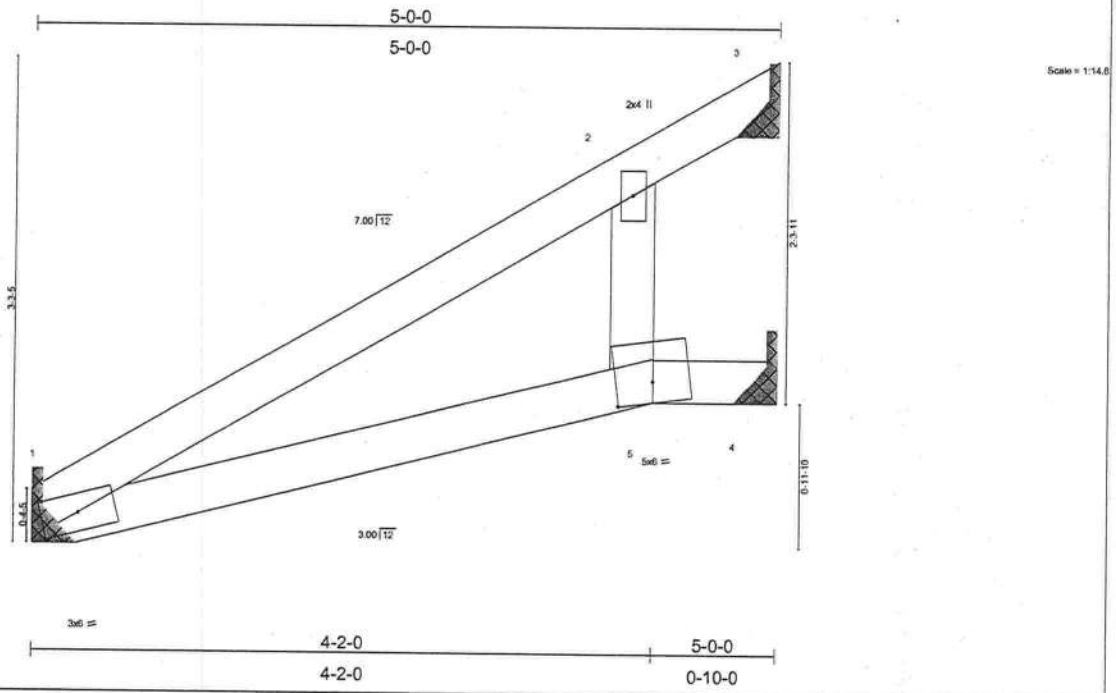

Plate Offsets (X,Y): [5:0-3-0,0-1-12]

LOADING (psf)		SPACING	2-0-0	CSI		DEFL	in	(loc)	l/defl	L/d	PLATES	GRIP
TCLL	20.0	Plates Increase	1.25	TC	0.29	Vert(LL)	0.06	5	>999	240	MT20	244/190
TCDL	7.0	Lumber Increase	1.25	BC	0.10	Vert(TL)	-0.06	1-5	>877	180		
BCLL	10.0	Rep Stress Incr	YES	WB	0.02	Horz(TL)	0.02	4	n/a	n/a		
BCDL	5.0	Code FBC2001/TPI2002		(Matrix)							Weight: 18 lb	

LUMBER
TOP CHORD 2 X 4 SYP No.2D
BOT CHORD 2 X 4 SYP No.2D
WEBS 2 X 4 SYP No.3

BRACING
TOP CHORD Structural wood sheathing directly applied or 5-0-0 oc purlins.
BOT CHORD Rigid ceiling directly applied or 6-0-0 oc bracing.

REACTIONS (lb/size) 1=198/Mechanical, 3=187/Mechanical, 4=10/Mechanical
Max Horz 1=134(load case 5)
Max Uplift1=-33(load case 5), 3=-118(load case 5)

FORCES (lb) - Maximum Compression/Maximum Tension
TOP CHORD 1-2=-95/34, 2-3=-71/92
BOT CHORD 1-5=-19/4, 4-5=-0/0
WEBS 2-5=0/69

NOTES
1) Wind: ASCE 7-98; 110mph (3-second gust); h=20ft; TCDL=4.2psf; BCDL=3.0psf; Category II; Exp B; enclosed; MWFRS gable end zone and C-C Exterior(2) zone; Lumber DOL=1.60 plate grip DOL=1.60. This truss is designed for C-C for members and forces, and for MWFRS for reactions specified.
2) Refer to girder(s) for truss to truss connections.
3) Provide mechanical connection (by others) of truss to bearing plate capable of withstanding 33 lb uplift at joint 1 and 118 lb uplift at joint 3.

LOAD CASE(S) Standard

SEPTEMBER 21, 2005 TRUSS DESIGN ENGINEER:
THOMAS E. MILLER PE 56877, BYRON K. ANDERSON PE 60987
STRUCTURAL ENGINEERING AND INSPECTIONS, INC. EB 9196
16105 N. FLORIDA AVE. STE B, LUTZ, FL 33549

Job	Truss	Truss Type	Qty	Ply	Dwg.#092105607
L130833	EJ5Z	SPECIAL	1	1	Job Reference (optional)

Builders FirstSource, Lake City, Fl 32055

6.200 s Jul 13 2005 MiTek Industries, Inc. Tue Sep 20 17:50:43 2005 Page 1

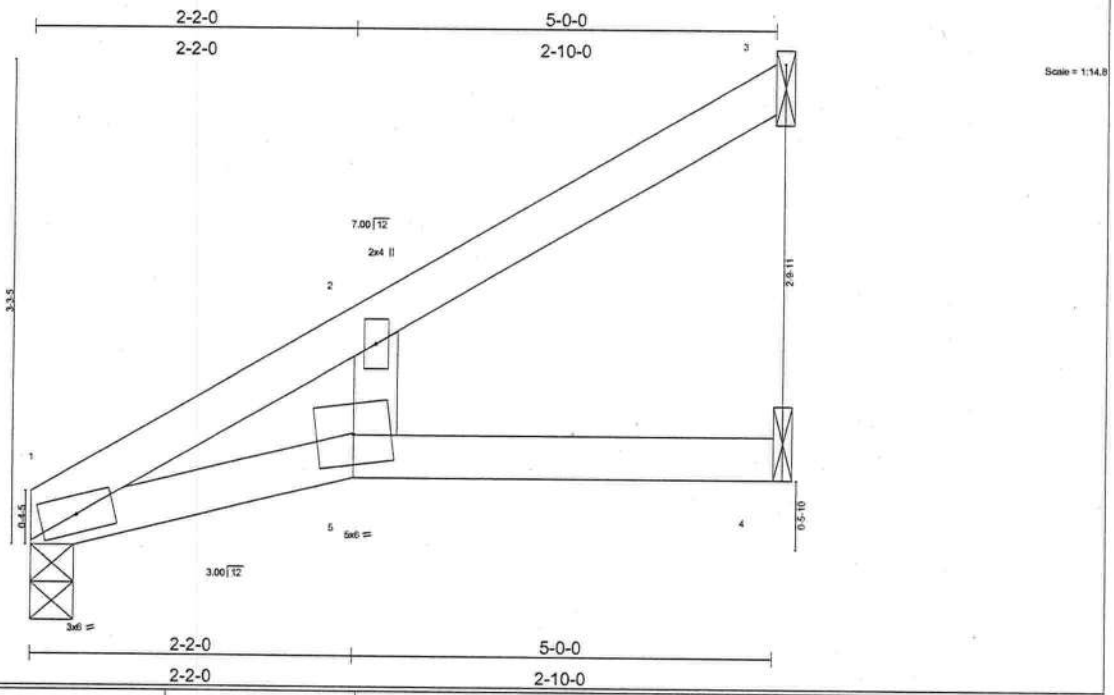

LOADING (psf)		SPACING	2-0-0	CSI		DEFL	in	(loc)	l/defl	L/d	PLATES	GRIP
TCLL	20.0	Plates Increase	1.25	TC	0.38	Vert(LL)	0.10	5	>565	240	MT20	244/190
TCDL	7.0	Lumber Increase	1.25	BC	0.05	Vert(TL)	-0.12	5	>468	180		
BCLL	10.0	Rep Stress Incr	YES	WB	0.02	Horz(TL)	0.03	4	n/a	n/a		
BCDL	5.0	Code FBC2001/TPI2002		(Matrix)							Weight: 18 lb	

LUMBER
TOP CHORD 2 X 4 SYP No.2D
BOT CHORD 2 X 4 SYP No.2D
WEBS 2 X 4 SYP No.3

BRACING
TOP CHORD Structural wood sheathing directly applied or 5-0-0 oc purlins.
BOT CHORD Rigid ceiling directly applied or 10-0-0 oc bracing.

REACTIONS (lb/size) 1=201/0-3-8, 3=160/Mechanical, 4=42/Mechanical
Max Horz 1=136(load case 5)
Max Uplift1=-34(load case 5), 3=-126(load case 5)

FORCES (lb) - Maximum Compression/Maximum Tension
TOP CHORD 1-2=-101/0, 2-3=-82/73
BOT CHORD 1-5=0/18, 4-5=-0/0
WEBS 2-5=0/76

NOTES
1) Wind: ASCE 7-98; 110mph (3-second gust); h=20ft; TCDL=4.2psf; BCDL=3.0psf; Category II; Exp B; enclosed; MWFRS gable end zone and C-C Exterior(2) zone; Lumber DOL=1.60 plate grip DOL=1.60. This truss is designed for C-C for members and forces, and for MWFRS for reactions specified.
2) Refer to girder(s) for truss to truss connections.
3) Bearing at joint(s) 1 considers parallel to grain value using ANSI/TPI 1 angle to grain formula. Building designer should verify capacity of bearing surface.
4) Provide mechanical connection (by others) of truss to bearing plate capable of withstanding 34 lb uplift at joint 1 and 126 lb uplift at joint 3.

LOAD CASE(S) Standard

SEPTEMBER 21, 2005 TRUSS DESIGN ENGINEER:
THOMAS E. MILLER PE 56877, BYRON K. ANDERSON PE 60987
STRUCTURAL ENGINEERING AND INSPECTIONS, INC. EB 9196
16105 N. FLORIDA AVE. STE B, LUTZ, FL 33549

Job	Truss	Truss Type	Qty	Ply	Dwg.#092105608
L130833	EJ7	MONO TRUSS	19	1	Job Reference (optional)

Builders FirstSource, Lake City, Fl 32055

6.200 s Jul 13 2005 MiTek Industries, Inc. Tue Sep 20 17:50:43 2005 Page 1

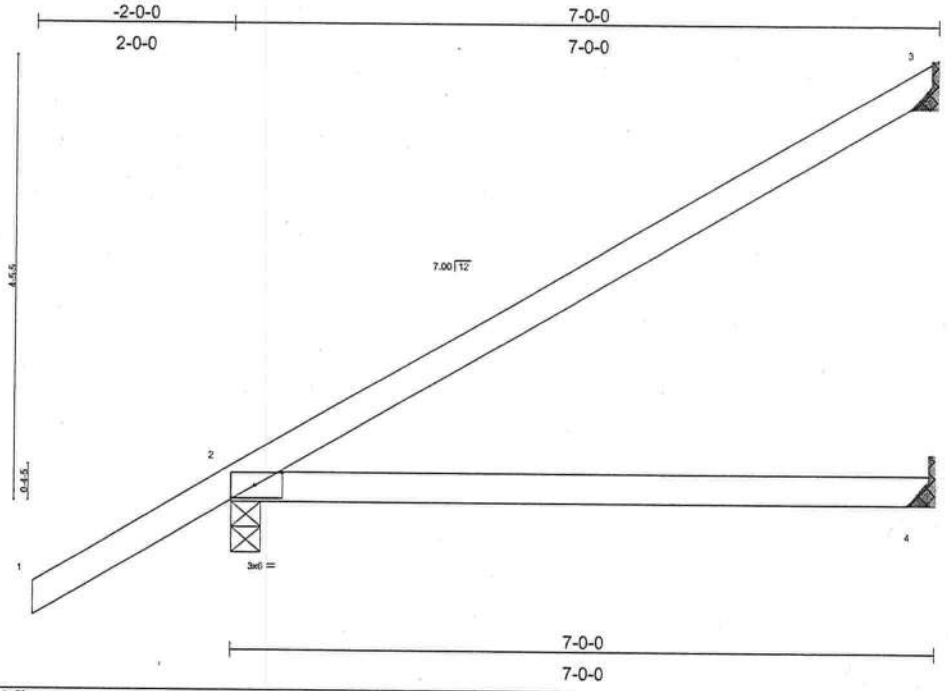

Plate Offsets (X,Y): [2:0-3-3,0-1-8]

LOADING (psf)		SPACING	2-0-0	CSI		DEFL	in	(loc)	l/defl	L/d	PLATES	GRIP
TCLL	20.0	Plates Increase	1.25	TC	0.38	Vert(LL)	-0.11	2-4	>728	240	MT20	244/190
TCDL	7.0	Lumber Increase	1.25	BC	0.30	Vert(TL)	-0.18	2-4	>436	180		
BCLL	10.0	Rep Stress Incr	YES	WB	0.00	Horz(TL)	-0.00	3	n/a	n/a		
BCDL	5.0	Code FBC2001/TPI2002		(Matrix)							Weight: 26 lb	

LUMBER
TOP CHORD 2 X 4 SYP No.2D
BOT CHORD 2 X 4 SYP No.2D

BRACING
TOP CHORD Structural wood sheathing directly applied or 6-0-0 oc purlins.
BOT CHORD Rigid ceiling directly applied or 10-0-0 oc bracing. .

REACTIONS (lb/size) 3=160/Mechanical, 2=416/0-3-8, 4=103/Mechanical
Max Horz 2=259(load case 5)
Max Uplift3=-144(load case 5), 2=-196(load case 5)

FORCES (lb) - Maximum Compression/Maximum Tension
TOP CHORD 1-2=0/54, 2-3=-109/64
BOT CHORD 2-4=0/0

NOTES
1) Wind: ASCE 7-98; 110mph (3-second gust); h=20ft; TCDL=4.2psf; BCDL=3.0psf; Category II; Exp B; enclosed; MWFRS gable end zone and C-C Exterior(2) zone; Lumber DOL=1.60 plate grip DOL=1.60. This truss is designed for C-C for members and forces, and for MWFRS for reactions specified.
2) Refer to girder(s) for truss to truss connections.
3) Provide mechanical connection (by others) of truss to bearing plate capable of withstanding 144 lb uplift at joint 3 and 196 lb uplift at joint 2.

LOAD CASE(S) Standard

SEPTEMBER 21, 2005 TRUSS DESIGN ENGINEER:
THOMAS E. MILLER PE 56877, BYRON K. ANDERSON PE 60987
STRUCTURAL ENGINEERING AND INSPECTIONS, INC. EB 9196
16105 N. FLORIDA AVE. STE B, LUTZ, FL 33549

Job	Truss	Truss Type	Qty	Ply	
L130833	EJ7A	SPECIAL	6	1	Dwg.#092105609

Job Reference (optional)

Builders FirstSource, Lake City, Fl 32055

6.200 s Jul 13 2005 MiTek Industries, Inc. Tue Sep 20 17:50:44 2005 Page 1

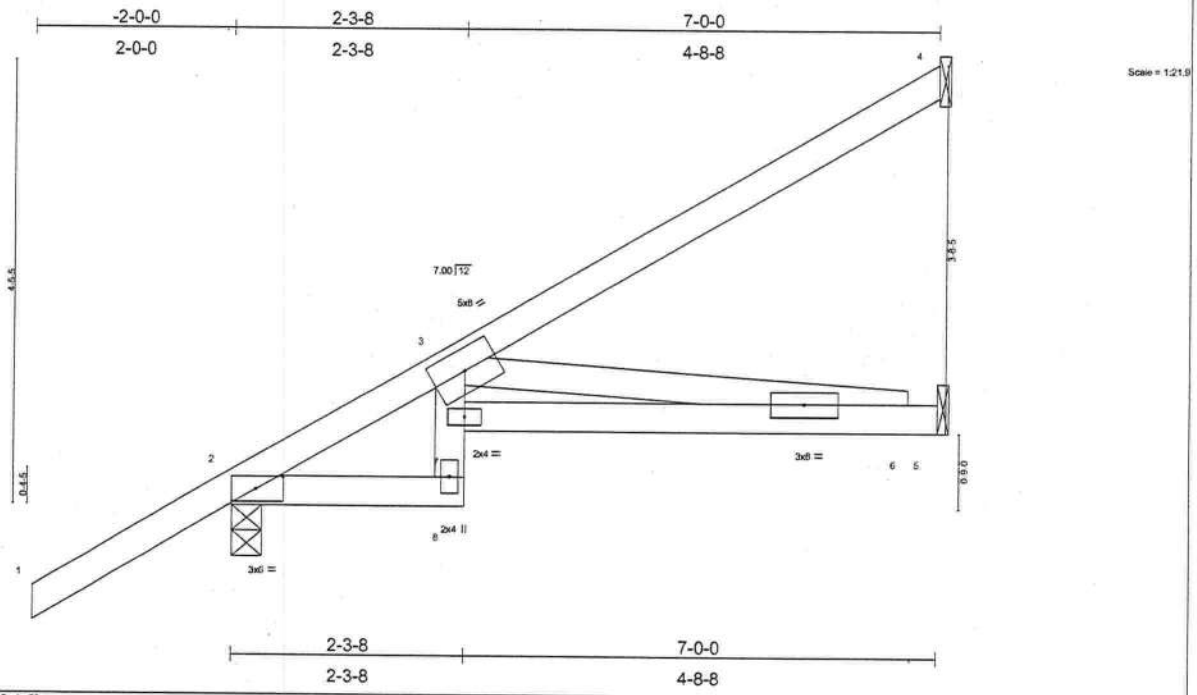

Plate Offsets (X,Y): [2:0-3-3,0-1-8]

LOADING (psf)		SPACING	2-0-0	CSI		DEFL	in	(loc)	l/defl	L/d	PLATES	GRIP
TCLL	20.0	Plates Increase	1.25	TC	0.24	Vert(LL)	-0.04	6-7	>999	240	MT20	244/190
TCDL	7.0	Lumber Increase	1.25	BC	0.61	Vert(TL)	-0.07	6-7	>999	180		
BCLL	10.0	Rep Stress Incr	YES	WB	0.32	Horz(TL)	0.03	5	n/a	n/a		
BCDL	5.0	Code FBC2001/TPI2002		(Matrix)							Weight: 34 lb	

LUMBER
TOP CHORD 2 X 4 SYP No.2D
BOT CHORD 2 X 4 SYP No.2D *Except*
B2 2 X 4 SYP No.3
WEBS 2 X 4 SYP No.3

BRACING
TOP CHORD Structural wood sheathing directly applied or 6-0-0 oc purlins.
BOT CHORD Rigid ceiling directly applied or 10-0-0 oc bracing.

REACTIONS (lb/size) 4=111/Mechanical, 2=419/0-3-8, 5=156/Mechanical
Max Horz 2=261(load case 5)
Max Uplift4=-104(load case 5), 2=-196(load case 5), 5=-35(load case 5)

FORCES (lb) - Maximum Compression/Maximum Tension
TOP CHORD 1-2=0/54, 2-3=-343/0, 3-4=-77/43
BOT CHORD 2-8=-88/233, 7-8=0/55, 3-7=0/107, 6-7=-391/768, 5-6=0/0
WEBS 3-6=-774/393

NOTES
1) Wind: ASCE 7-98; 110mph (3-second gust); h=20ft; TCDL=4.2psf; BCDL=3.0psf; Category II; Exp B; enclosed; MWFRS gable end zone and C-C Exterior(2) zone; Lumber DOL=1.60 plate grip DOL=1.60. This truss is designed for C-C for members and forces, and for MWFRS for reactions specified.
2) Refer to girder(s) for truss to truss connections.
3) Provide mechanical connection (by others) of truss to bearing plate capable of withstanding 104 lb uplift at joint 4, 196 lb uplift at joint 2 and 35 lb uplift at joint 5.

LOAD CASE(S) Standard

SEPTEMBER 21, 2005 TRUSS DESIGN ENGINEER:
THOMAS E. MILLER PE 56877, BYRON K. ANDERSON PE 60987
STRUCTURAL ENGINEERING AND INSPECTIONS, INC. EB 9196
16105 N. FLORIDA AVE. STE B, LUTZ, FL 33549

Job	Truss	Truss Type	Qty	Ply	
L130833	EJ7B	MONO HIP	1	1	Job Reference (optional)

Dwg.#092105610

Builders FirstSource, Lake City, Fl 32055

6.200 s Jul 13 2005 MiTek Industries, Inc. Tue Sep 20 17:50:45 2005 Page 1

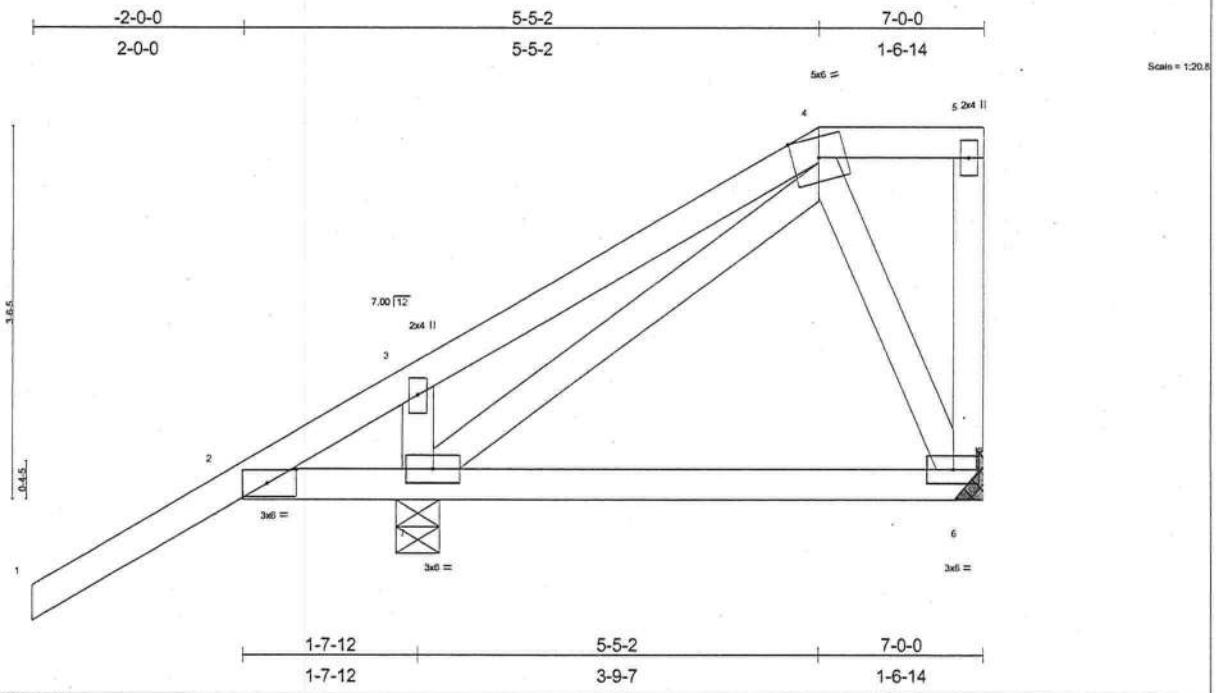

Plate Offsets (X,Y): [2:0-3-3,0-1-8]

LOADING (psf)		SPACING	2-0-0	CSI		DEFL	in	(loc)	l/defl	L/d	PLATES	GRIP
TCLL	20.0	Plates Increase	1.25	TC	0.22	Vert(LL)	-0.01	6-7	>999	240	MT20	244/190
TCDL	7.0	Lumber Increase	1.25	BC	0.21	Vert(TL)	-0.02	6-7	>999	180		
BCLL	10.0	Rep Stress Incr	YES	WB	0.17	Horz(TL)	0.00	6	n/a	n/a		
BCDL	5.0	Code FBC2001/TPI2002		(Matrix)							Weight: 43 lb	

LUMBER
TOP CHORD 2 X 4 SYP No.2D
BOT CHORD 2 X 4 SYP No.2D
WEBS 2 X 4 SYP No.3

BRACING
TOP CHORD Structural wood sheathing directly applied or 6-0-0 oc purlins, except end verticals.
BOT CHORD Rigid ceiling directly applied or 6-0-0 oc bracing.

REACTIONS (lb/size) 6=142/Mechanical, 7=541/0-4-15
Max Horz 7=222(load case 5)
Max Uplift6=-65(load case 4), 7=-318(load case 5)

FORCES (lb) - Maximum Compression/Maximum Tension
TOP CHORD 1-2=0/53, 2-3=-514/326, 3-4=-414/345, 4-5=-18/0, 5-6=-41/42
BOT CHORD 2-7=-255/538, 6-7=-29/40
WEBS 3-7=-164/181, 4-6=-61/88, 4-7=-388/429

NOTES
1) Unbalanced roof live loads have been considered for this design.
2) Wind: ASCE 7-98; 110mph (3-second gust); h=20ft; TCDL=4.2psf; BCDL=3.0psf; Category II; Exp B; enclosed; MWFRS gable end zone and C-C Exterior(2) zone; cantilever left exposed ; Lumber DOL=1.60 plate grip DOL=1.60. This truss is designed for C-C for members and forces, and for MWFRS for reactions specified.
3) This truss is not designed to support a ceiling and is not intended for use where aesthetics are a consideration.
4) Provide adequate drainage to prevent water ponding.
5) Refer to girder(s) for truss to truss connections.
6) Provide mechanical connection (by others) of truss to bearing plate capable of withstanding 65 lb uplift at joint 6 and 318 lb uplift at joint 7.

LOAD CASE(S) Standard

SEPTEMBER 21, 2005 TRUSS DESIGN ENGINEER:
THOMAS E. MILLER PE 56877, BYRON K. ANDERSON PE 60987
STRUCTURAL ENGINEERING AND INSPECTIONS, INC. EB 9196
16105 N. FLORIDA AVE. STE B, LUTZ, FL 33549

Job	Truss	Truss Type	Qty	Ply	Dwg.#092105611
L130833	EJ7C	MONO HIP	1	1	Job Reference (optional)

Builders FirstSource, Lake City, Fl 32055

6.200 s Jul 13 2005 MiTek Industries, Inc. Tue Sep 20 17:50:45 2005 Page 1

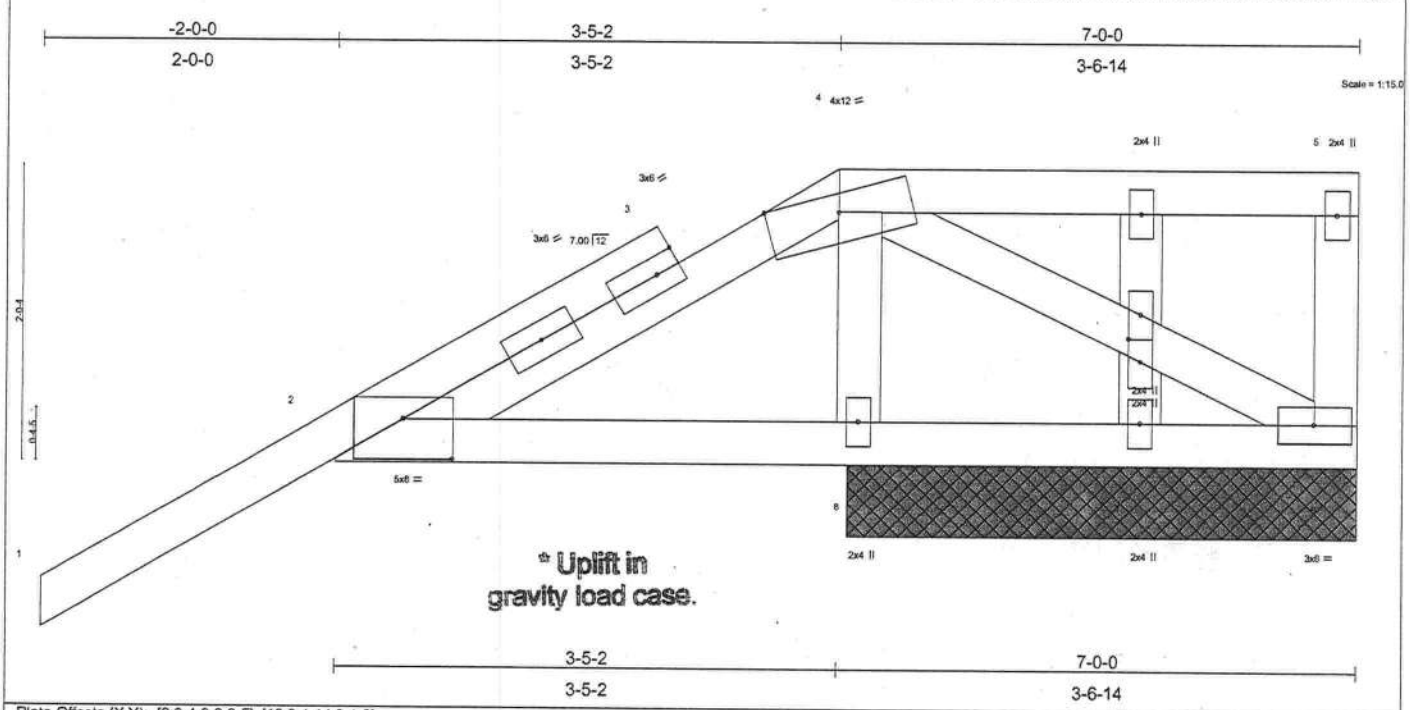

Plate Offsets (X,Y): [2:0-4-0,0-3-5], [10:0-1-14,0-1-0]

LOADING (psf)		SPACING	2-0-0	CSI		DEFL	in	(loc)	l/defl	L/d	PLATES	GRIP
TCLL	20.0	Plates Increase	1.25	TC	0.22	Vert(LL)	-0.03	1-2	n/r	90	MT20	244/190
TCDL	7.0	Lumber Increase	1.25	BC	0.17	Vert(TL)	-0.05	1-2	n/r	80		
BCLL	10.0	Rep Stress Incr	YES	WB	0.21	Horz(TL)	0.00	6	n/a	n/a		
BCDL	5.0	Code FBC2001/TPI2002		(Matrix)							Weight: 39 lb	

LUMBER
TOP CHORD 2 X 4 SYP No.2D
BOT CHORD 2 X 4 SYP No.2D
WEBS 2 X 4 SYP No.3
OTHERS 2 X 4 SYP No.3

BRACING
TOP CHORD Structural wood sheathing directly applied or 6-0-0 oc purlins, except end verticals.
BOT CHORD Rigid ceiling directly applied or 6-0-0 oc bracing.

REACTIONS (lb/size) 6=-192/3-6-0, 8=850/3-6-0, 7=26/3-6-0
Max Horz 8=152(load case 5)
Max Uplift6=-192(load case 1), 8=-602(load case 5)
Max Grav 6=223(load case 5), 8=850(load case 1), 7=36(load case 3)

FORCES (lb) - Maximum Compression/Maximum Tension
TOP CHORD 1-2=0/53, 2-3=-702/537, 3-4=-695/614, 4-5=-10/24, 5-6=-83/92
BOT CHORD 2-8=-510/748, 7-8=-572/650, 6-7=-572/650
WEBS 4-8=-740/817, 4-6=-740/651

NOTES
1) Wind: ASCE 7-98; 110mph (3-second gust); h=20ft; TCDL=4.2psf; BCDL=3.0psf; Category II; Exp B; enclosed; MWFRS gable end zone and C-C Exterior(2) zone; cantilever left exposed ; Lumber DOL=1.60 plate grip DOL=1.60. This truss is designed for C-C for members and forces, and for MWFRS for reactions specified.
2) Truss designed for wind loads in the plane of the truss only. For studs exposed to wind (normal to the face), see MiTek "Standard Gable End Detail"
3) Provide adequate drainage to prevent water ponding.
4) Gable studs spaced at 2-0-0 oc.
5) Provide mechanical connection (by others) of truss to bearing plate capable of withstanding 192 lb uplift at joint 6 and 602 lb uplift at joint 8.
6) Non Standard bearing condition. Review required.

LOAD CASE(S) Standard

SEPTEMBER 21, 2005 TRUSS DESIGN ENGINEER:
THOMAS E. MILLER PE 56877, BYRON K. ANDERSON PE 60987
STRUCTURAL ENGINEERING AND INSPECTIONS, INC. EB 9196
16105 N. FLORIDA AVE. STE B, LUTZ, FL 33549

Job	Truss	Truss Type	Qty	Ply	
L130833	HJ5	MONO TRUSS	2	1	Job Reference (optional)

Dwg.#092105612

Builders FirstSource, Lake City, Fl 32055

6.200 s Jul 13 2005 MiTek Industries, Inc. Tue Sep 20 17:50:46 2005 Page 1

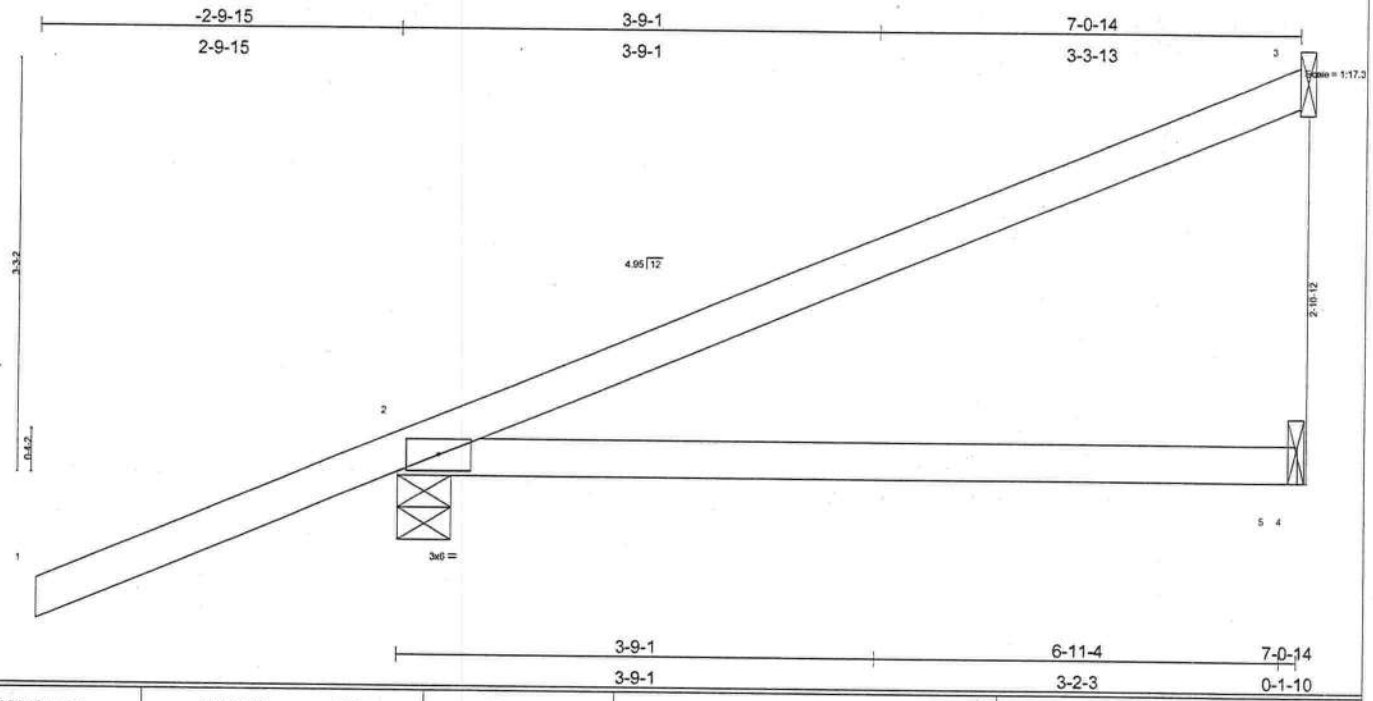

LOADING (psf)		SPACING	2-0-0	CSI		DEFL	in	(loc)	l/defl	L/d	PLATES	GRIP
TCLL	20.0	Plates Increase	1.25	TC	0.47	Vert(LL)	-0.07	2-5	>999	240	MT20	244/190
TCDL	7.0	Lumber Increase	1.25	BC	0.24	Vert(TL)	-0.12	2-5	>678	180		
BCLL	10.0	Rep Stress Incr	NO	WB	0.00	Horz(TL)	-0.00	3	n/a	n/a		
BCDL	5.0	Code FBC2001/TPI2002		(Matrix)							Weight: 27 lb	

LUMBER
TOP CHORD 2 X 4 SYP No.2D
BOT CHORD 2 X 4 SYP No.2D

BRACING
TOP CHORD Structural wood sheathing directly applied or 7-0-14 oc purlins.
BOT CHORD Rigid ceiling directly applied or 10-0-0 oc bracing.

REACTIONS (lb/size) 3=191/Mechanical, 2=373/0-4-15, 5=117/Mechanical
Max Horz 2=194(load case 4)
Max Uplift3=-155(load case 4), 2=-237(load case 4)

FORCES (lb) - Maximum Compression/Maximum Tension
TOP CHORD 1-2=0/57, 2-3=-82/51
BOT CHORD 2-5=-0/0, 4-5=-0/0

NOTES
1) Wind: ASCE 7-98; 110mph (3-second gust); h=20ft; TCDL=4.2psf; BCDL=3.0psf; Category II; Exp B; enclosed; MWFRS gable end zone; Lumber DOL=1.60 plate grip DOL=1.60.
2) This truss is not designed to support a ceiling and is not intended for use where aesthetics are a consideration.
3) Refer to girder(s) for truss to truss connections.
4) Provide mechanical connection (by others) of truss to bearing plate capable of withstanding 155 lb uplift at joint 3 and 237 lb uplift at joint 2.
5) In the LOAD CASE(S) section, loads applied to the face of the truss are noted as front (F) or back (B).

LOAD CASE(S) Standard
1) Regular: Lumber Increase=1.25, Plate Increase=1.25
Uniform Loads (plf)
Vert: 1-2=-54
Trapezoidal Loads (plf)
Vert: 2=-3(F=26, B=26)-to-3=-95(F=-21, B=-21), 2=-0(F=15, B=15)-to-4=-53(F=-12, B=-12)

SEPTEMBER 21, 2005 TRUSS DESIGN ENGINEER:
THOMAS E. MILLER PE 56877, BYRON K. ANDERSON PE 60987
STRUCTURAL ENGINEERING AND INSPECTIONS, INC. EB 9196
16105 N. FLORIDA AVE. STE B, LUTZ, FL 33549

Job	Truss	Truss Type	Qty	Ply	Dwg.#092105613
L130833	HJ5V	MONO SCISSOR	1	1	Job Reference (optional)

Builders FirstSource, Lake City, Fl 32055

6.200 s Jul 13 2005 MiTek Industries, Inc. Tue Sep 20 17:50:46 2005 Page 1

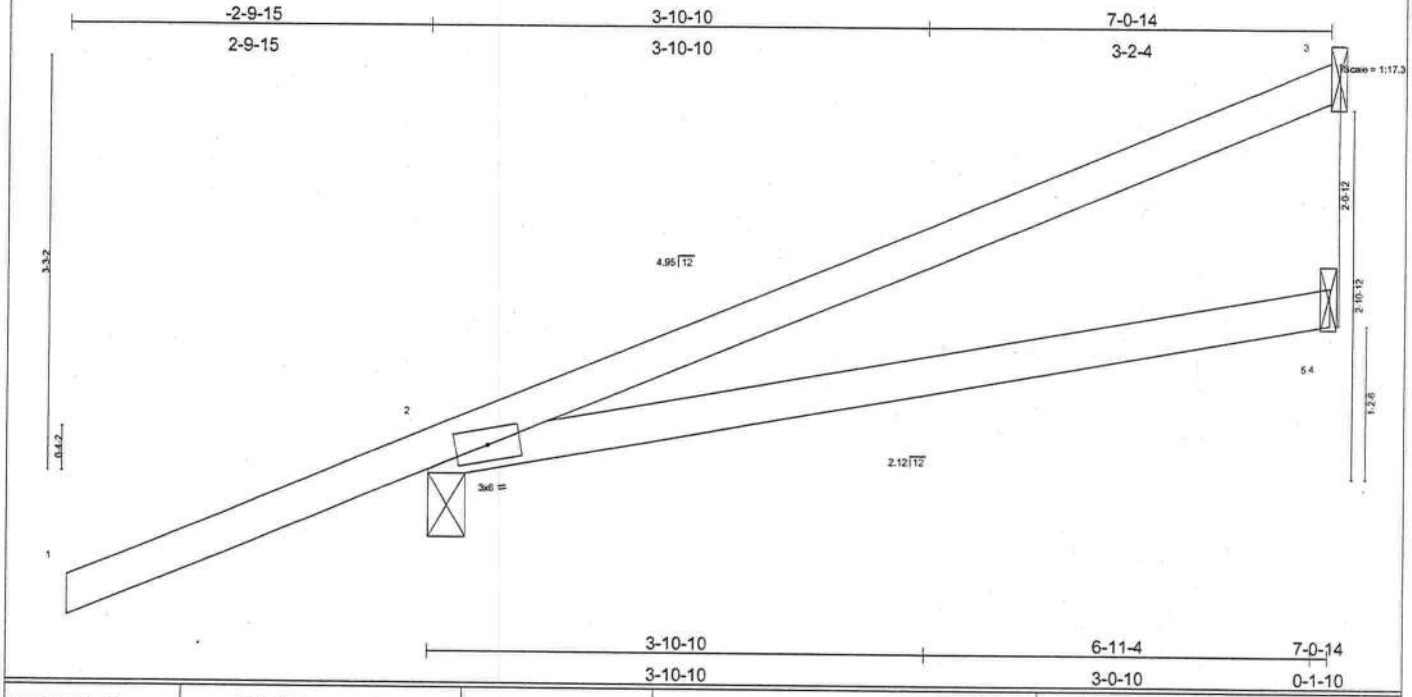

LOADING (psf)		SPACING	2-0-0	CSI		DEFL	in	(loc)	l/defl	L/d	PLATES	GRIP
TCLL	20.0	Plates Increase	1.25	TC	0.45	Vert(LL)	-0.07	2-5	>999	240	MT20	244/190
TCDL	7.0	Lumber Increase	1.25	BC	0.24	Vert(TL)	-0.13	2-5	>633	180		
BCLL	10.0	Rep Stress Incr	NO	WB	0.00	Horz(TL)	-0.00	3	n/a	n/a		
BCDL	5.0	Code FBC2001/TPI2002		(Matrix)							Weight: 27 lb	

LUMBER
TOP CHORD 2 X 4 SYP No.2D
BOT CHORD 2 X 4 SYP No.2D

BRACING
TOP CHORD Structural wood sheathing directly applied or 7-0-14 oc purlins.
BOT CHORD Rigid ceiling directly applied or 6-0-0 oc bracing.

REACTIONS (lb/size) 3=193/Mechanical, 2=368/0-3-8, 5=119/Mechanical
Max Horz 2=192(load case 4)
Max Uplift3=-156(load case 4), 2=-230(load case 4)

FORCES (lb) - Maximum Compression/Maximum Tension
TOP CHORD 1-2=0/56, 2-3=-82/52
BOT CHORD 2-5=-12/13, 4-5=-2/0

NOTES
1) Wind: ASCE 7-98; 110mph (3-second gust); h=20ft; TCDL=4.2psf; BCDL=3.0psf; Category II; Exp B; enclosed; MWFRS gable end zone; Lumber DOL=1.60 plate grip DOL=1.60.
2) This truss is not designed to support a ceiling and is not intended for use where aesthetics are a consideration.
3) Refer to girder(s) for truss to truss connections.
4) Bearing at joint(s) 2 considers parallel to grain value using ANSI/TPI 1 angle to grain formula. Building designer should verify capacity of bearing surface.
5) Provide mechanical connection (by others) of truss to bearing plate capable of withstanding 156 lb uplift at joint 3 and 230 lb uplift at joint 2.
6) In the LOAD CASE(S) section, loads applied to the face of the truss are noted as front (F) or back (B).

LOAD CASE(S) Standard
1) Regular: Lumber Increase=1.25, Plate Increase=1.25
Uniform Loads (plf)
Vert: 1-2=-54
Trapezoidal Loads (plf)
Vert: 2=-2(F=26, B=26)-to-3=-95(F=-21, B=-21), 2=0(F=15, B=15)-to-4=-53(F=-12, B=-12)

SEPTEMBER 21, 2005 TRUSS DESIGN ENGINEER:
THOMAS E. MILLER PE 56877, BYRON K. ANDERSON PE 60987
STRUCTURAL ENGINEERING AND INSPECTIONS, INC. EB 9196
16105 N. FLORIDA AVE. STE B, LUTZ, FL 33549

Job	Truss	Truss Type	Qty	Ply	Dwg.#092105614
L130833	HJ7	MONO TRUSS	2	1	Job Reference (optional)

Builders FirstSource, Lake City, Fl 32055

6.200 s Jul 13 2005 MiTek Industries, Inc. Tue Sep 20 17:50:47 2005 Page 1

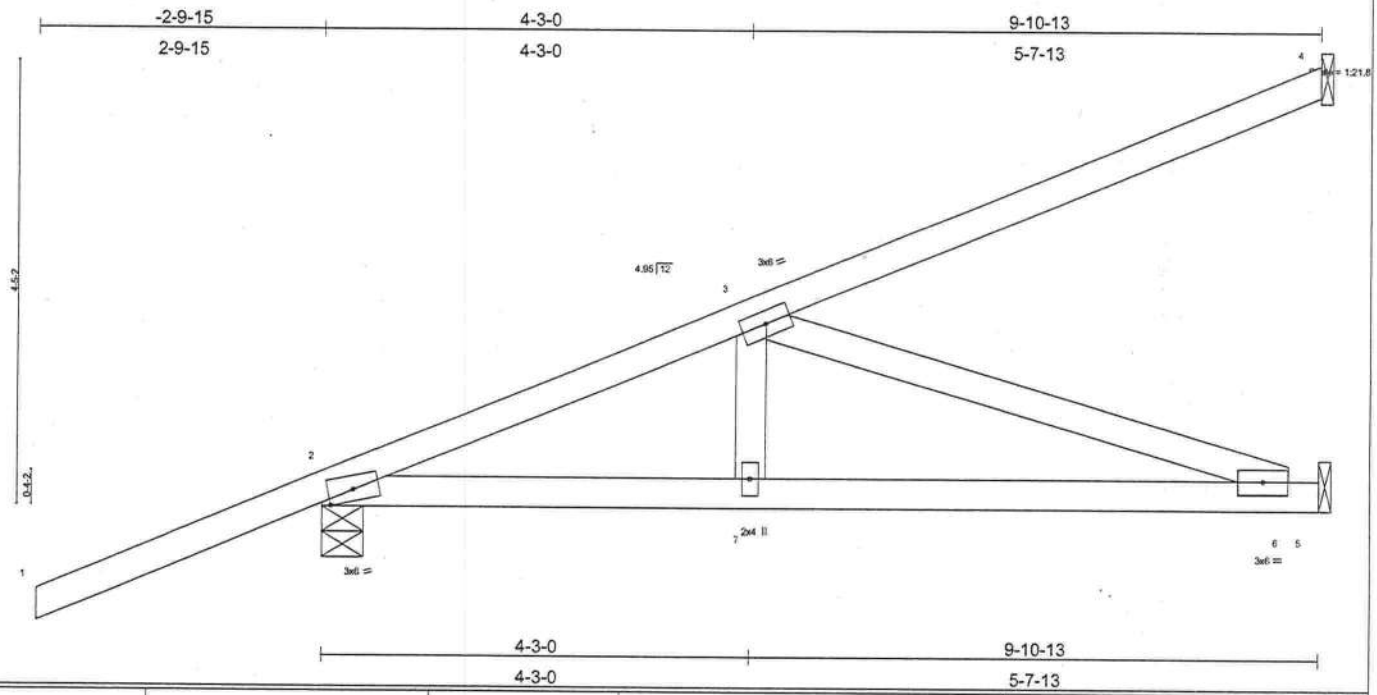

LOADING (psf)		SPACING 2-0-0		CSI		DEFL	in	(loc)	l/defl	L/d	PLATES	GRIP
TCLL	20.0	Plates Increase	1.25	TC	0.54	Vert(LL)	-0.09	6-7	>999	240	MT20	244/190
TCDL	7.0	Lumber Increase	1.25	BC	0.49	Vert(TL)	-0.15	6-7	>761	180		
BCLL	10.0	Rep Stress Incr	NO	WB	0.44	Horz(TL)	0.01	5	n/a	n/a		
BCDL	5.0	Code FBC2001/TPI2002		(Matrix)							Weight: 46 lb	

LUMBER
TOP CHORD 2 X 4 SYP No.2D
BOT CHORD 2 X 4 SYP No.2D
WEBS 2 X 4 SYP No.3

BRACING
TOP CHORD Structural wood sheathing directly applied or 6-0-0 oc purlins.
BOT CHORD Rigid ceiling directly applied or 10-0-0 oc bracing.

REACTIONS (lb/size) 4=268/Mechanical, 2=532/0-4-15, 5=378/Mechanical
Max Horz 2=315(load case 4)
Max Uplift4=-248(load case 4), 2=-258(load case 4), 5=-72(load case 4)

FORCES (lb) - Maximum Compression/Maximum Tension
TOP CHORD 1-2=0/57, 2-3=-782/62, 3-4=-126/75
BOT CHORD 2-7=-290/707, 6-7=-290/707, 5-6=0/0
WEBS 3-7=0/182, 3-6=-746/306

NOTES
1) Wind: ASCE 7-98; 110mph (3-second gust); h=20ft; TCDL=4.2psf; BCDL=3.0psf; Category II; Exp B; enclosed; MWFRS gable end zone; Lumber DOL=1.60 plate grip DOL=1.60.
2) Refer to girder(s) for truss to truss connections.
3) Provide mechanical connection (by others) of truss to bearing plate capable of withstanding 248 lb uplift at joint 4, 258 lb uplift at joint 2 and 72 lb uplift at joint 5.
4) In the LOAD CASE(S) section, loads applied to the face of the truss are noted as front (F) or back (B).

LOAD CASE(S) Standard
1) Regular: Lumber Increase=1.25, Plate Increase=1.25
Uniform Loads (plf)
Vert: 1-2=-54
Trapezoidal Loads (plf)
Vert: 2=-3(F=26, B=26)-to-4=-134(F=-40, B=-40), 2=-0(F=15, B=15)-to-5=-74(F=-22, B=-22)

SEPTEMBER 21, 2005 TRUSS DESIGN ENGINEER:
THOMAS E. MILLER PE 56877, BYRON K. ANDERSON PE 60987
STRUCTURAL ENGINEERING AND INSPECTIONS, INC. EB 9196
16105 N. FLORIDA AVE. STE B, LUTZ, FL 33549

Job	Truss	Truss Type	Qty	Ply	
L130833	T01	COMMON	11	1	Job Reference (optional)

Dwg.#092105615

Builders FirstSource, Lake City, Fl 32055

6.200 s Jul 13 2005 MiTek Industries, Inc. Tue Sep 20 17:50:48 2005 Page 1

-2-0-0	5-7-13	10-10-0	16-0-3	21-8-0	23-8-0
2-0-0	5-7-13	5-2-3	5-2-3	5-7-13	2-0-0

Scale = 1:42.1

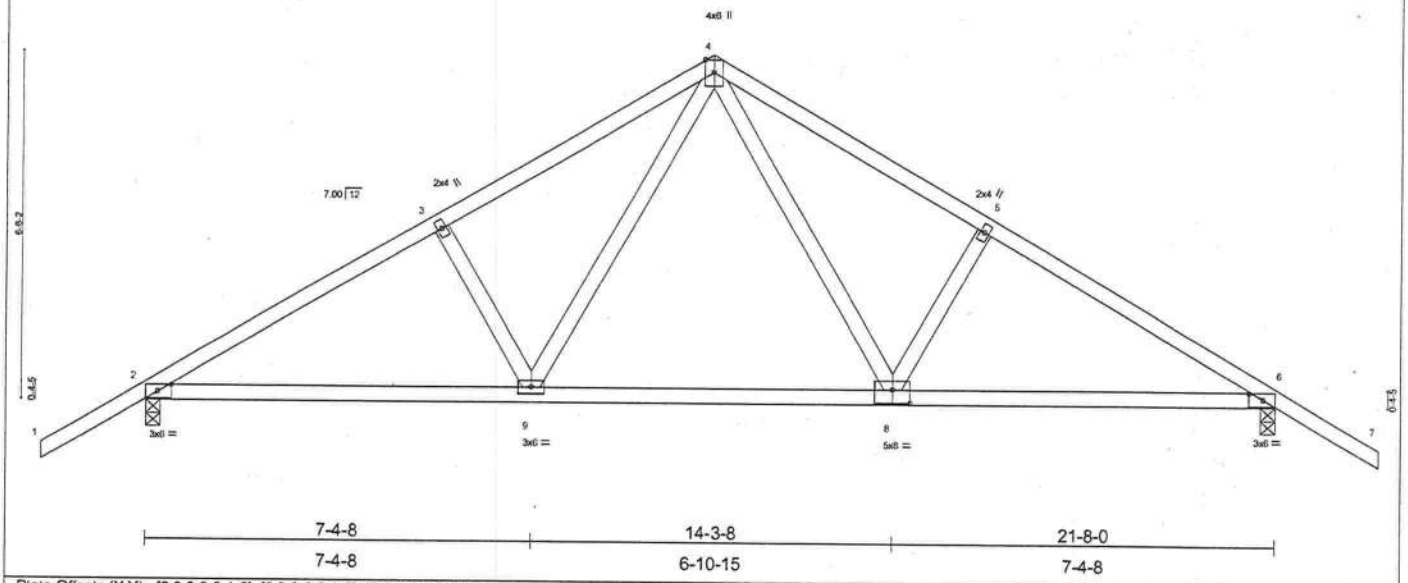

7-4-8	14-3-8	21-8-0
7-4-8	6-10-15	7-4-8

Plate Offsets (X,Y): [2:0-3-3,0-1-8], [6:0-3-3,0-1-8], [8:0-4-0,0-3-0]

LOADING (psf)		SPACING	2-0-0	CSI		DEFL	in	(loc)	l/defl	L/d	PLATES	GRIP
TCLL	20.0	Plates Increase	1.25	TC	0.26	Vert(LL)	-0.18	8-9	>999	240	MT20	244/190
TCDL	7.0	Lumber Increase	1.25	BC	0.71	Vert(TL)	-0.29	8-9	>885	180		
BCLL	10.0	Rep Stress Incr	NO	WB	0.24	Horz(TL)	0.04	6	n/a	n/a		
BCDL	5.0	Code FBC2001/TPI2002		(Matrix)							Weight: 108 lb	

LUMBER
TOP CHORD 2 X 4 SYP No.2D
BOT CHORD 2 X 4 SYP No.2D
WEBS 2 X 4 SYP No.3

BRACING
TOP CHORD Structural wood sheathing directly applied or 4-10-2 oc purlins.
BOT CHORD Rigid ceiling directly applied or 9-8-9 oc bracing.

REACTIONS (lb/size) 2=1186/0-3-8, 6=1186/0-3-8
Max Horz 2=227(load case 4)
Max Uplift2=-459(load case 5), 6=-459(load case 6)

FORCES (lb) - Maximum Compression/Maximum Tension
TOP CHORD 1-2=0/54, 2-3=-1713/567, 3-4=-1569/597, 4-5=-1569/597, 5-6=-1713/567, 6-7=0/54
BOT CHORD 2-9=-438/1401, 8-9=-203/962, 6-8=-322/1401
WEBS 3-9=-239/232, 4-9=-259/710, 4-8=-259/710, 5-8=-239/232

NOTES
1) Unbalanced roof live loads have been considered for this design.
2) Wind: ASCE 7-98; 110mph (3-second gust); h=20ft; TCDL=4.2psf; BCDL=3.0psf; Category II; Exp B; enclosed; MWFRS gable end zone and C-C Exterior(2) zone; Lumber DOL=1.60 plate grip DOL=1.60. This truss is designed for C-C for members and forces, and for MWFRS for reactions specified.
3) Provide mechanical connection (by others) of truss to bearing plate capable of withstanding 459 lb uplift at joint 2 and 459 lb uplift at joint 6.
4) In the LOAD CASE(S) section, loads applied to the face of the truss are noted as front (F) or back (B).

LOAD CASE(S) Standard
1) Regular: Lumber Increase=1.25, Plate Increase=1.25
Uniform Loads (plf)
Vert: 1-4=-54, 4-7=-54, 2-9=-30, 8-9=-80(F=-50), 6-8=-30

SEPTEMBER 21, 2005 TRUSS DESIGN ENGINEER:
THOMAS E. MILLER PE 56877, BYRON K. ANDERSON PE 60987
STRUCTURAL ENGINEERING AND INSPECTIONS, INC. EB 9196
16105 N. FLORIDA AVE. STE B, LUTZ, FL 33549

Job	Truss	Truss Type	Qty	Ply	
L130833	T01G	COMMON	1	1	Job Reference (optional)

Dwg.#092105616

Builders FirstSource, Lake City, Fl 32055

6.200 s Jul 13 2005 MiTek Industries, Inc. Tue Sep 20 17:50:49 2005 Page 1

-2-0-0	5-7-13	10-10-0	16-0-3	21-8-0	23-8-0
2-0-0	5-7-13	5-2-3	5-2-3	5-7-13	2-0-0

Scale = 1:42.1

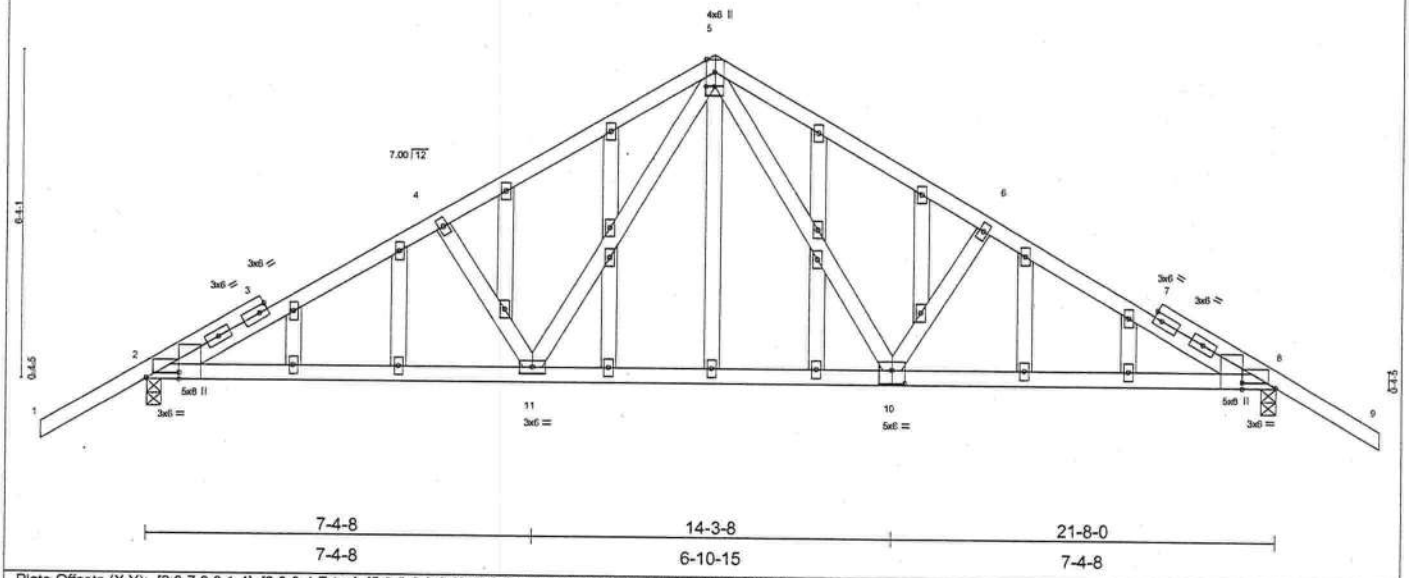

7-4-8	14-3-8	21-8-0
7-4-8	6-10-15	7-4-8

Plate Offsets (X,Y): [2:0-7-9,0-1-4], [2:0-0-4,Edge], [5:0-2-0,0-0-0], [8:0-7-9,0-1-4], [8:0-0-4,Edge], [10:0-3-0,0-3-0]

LOADING (psf)		SPACING	2-0-0	CSI		DEFL	in	(loc)	l/defl	L/d	PLATES	GRIP
TCLL	20.0	Plates Increase	1.25	TC	0.64	Vert(LL)	-0.14	8-10	>999	240	MT20	244/190
TCDL	7.0	Lumber Increase	1.25	BC	0.55	Vert(TL)	-0.23	8-10	>999	180		
BCLL	10.0	Rep Stress Incr	NO	WB	0.28	Horz(TL)	0.06	8	n/a	n/a		
BCDL	5.0	Code FBC2001/TPI2002		(Matrix)							Weight: 152 lb	

LUMBER
TOP CHORD 2 X 4 SYP No.2D
BOT CHORD 2 X 4 SYP No.2D
WEBS 2 X 4 SYP No.3
OTHERS 2 X 4 SYP No.3

BRACING
TOP CHORD Structural wood sheathing directly applied or 3-3-15 oc purlins.
BOT CHORD Rigid ceiling directly applied or 7-9-6 oc bracing.

REACTIONS (lb/size) 2=1784/0-3-8, 8=1784/0-3-8
Max Horz 2=215(load case 4)
Max Uplift2=-686(load case 5), 8=-686(load case 6)

FORCES (lb) - Maximum Compression/Maximum Tension
TOP CHORD 1-2=-14/113, 2-3=-2534/824, 3-4=-2425/814, 4-5=-2230/789, 5-6=-2230/789, 6-7=-2425/814, 7-8=-2534/824, 8-9=-14/113
BOT CHORD 2-11=-693/2112, 10-11=-350/1353, 8-10=-570/2112
WEBS 4-11=-625/362, 5-11=-310/879, 5-10=-310/879, 6-10=-625/362

NOTES
1) Unbalanced roof live loads have been considered for this design.
2) Wind: ASCE 7-98; 110mph (3-second gust); h=20ft; TCDL=4.2psf; BCDL=3.0psf; Category II; Exp B; enclosed; MWFRS gable end zone and C-C Exterior(2) zone; Lumber DOL=1.60 plate grip DOL=1.60. This truss is designed for C-C for members and forces, and for MWFRS for reactions specified.
3) Truss designed for wind loads in the plane of the truss only. For studs exposed to wind (normal to the face), see MiTek "Standard Gable End Detail"
4) All plates are 2x4 MT20 unless otherwise indicated.
5) Gable studs spaced at 2-0-0 oc.
6) Provide mechanical connection (by others) of truss to bearing plate capable of withstanding 686 lb uplift at joint 2 and 686 lb uplift at joint 8.
7) In the LOAD CASE(S) section, loads applied to the face of the truss are noted as front (F) or back (B).

LOAD CASE(S) Standard
1) Regular: Lumber Increase=1.25, Plate Increase=1.25
Uniform Loads (plf)
Vert: 1-5=-114(F=-60), 5-9=-114(F=-60), 2-8=-30

SEPTEMBER 21, 2005 TRUSS DESIGN ENGINEER:
THOMAS E. MILLER PE 56877, BYRON K. ANDERSON PE 60987
STRUCTURAL ENGINEERING AND INSPECTIONS, INC. EB 9196
16105 N. FLORIDA AVE. STE B, LUTZ, FL 33549

Job	Truss	Truss Type	Qty	Ply	
L130833	T02	COMMON	2	1	Job Reference (optional)

Dwg.#092105617

Builders FirstSource, Lake City, Fl 32055

6.200 s Jul 13 2005 MiTek Industries, Inc. Tue Sep 20 17:50:50 2005 Page 1

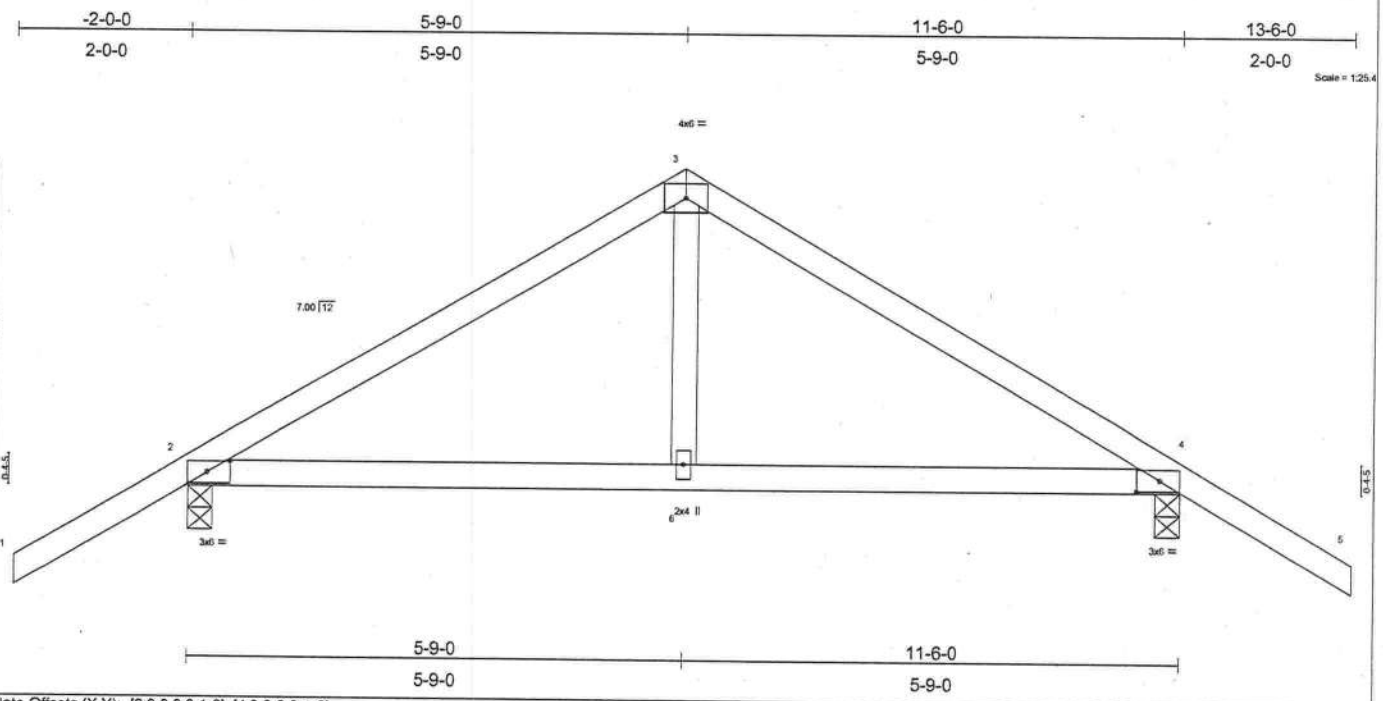

Plate Offsets (X,Y): [2:0-3-3,0-1-8], [4:0-3-3,0-1-8]

LOADING (psf)		SPACING	2-0-0	CSI		DEFL	in	(loc)	l/defl	L/d	PLATES	GRIP
TCLL	20.0	Plates Increase	1.25	TC	0.23	Vert(LL)	-0.03	4-6	>999	240	MT20	244/190
TCDL	7.0	Lumber Increase	1.25	BC	0.18	Vert(TL)	-0.04	4-6	>999	180		
BCLL	10.0	Rep Stress Incr	YES	WB	0.06	Horz(TL)	0.01	4	n/a	n/a		
BCDL	5.0	Code FBC2001/TPI2002		(Matrix)							Weight: 49 lb	

LUMBER
TOP CHORD 2 X 4 SYP No.2D
BOT CHORD 2 X 4 SYP No.2D
WEBS 2 X 4 SYP No.3

BRACING
TOP CHORD Structural wood sheathing directly applied or 6-0-0 oc purlins.
BOT CHORD Rigid ceiling directly applied or 10-0-0 oc bracing.

REACTIONS (lb/size) 2=587/0-3-8, 4=587/0-3-8
Max Horz 2=-124(load case 3)
Max Uplift2=-272(load case 5), 4=-272(load case 6)

FORCES (lb) - Maximum Compression/Maximum Tension
TOP CHORD 1-2=0/54, 2-3=-572/158, 3-4=-572/158, 4-5=0/54
BOT CHORD 2-6=-45/427, 4-6=-45/427
WEBS 3-6=0/192

NOTES
1) Unbalanced roof live loads have been considered for this design.
2) Wind: ASCE 7-98; 110mph (3-second gust); h=20ft; TCDL=4.2psf; BCDL=3.0psf; Category II; Exp B; enclosed; MWFRS gable end zone and C-C Exterior(2) zone; Lumber DOL=1.60 plate grip DOL=1.60. This truss is designed for C-C for members and forces, and for MWFRS for reactions specified.
3) Provide mechanical connection (by others) of truss to bearing plate capable of withstanding 272 lb uplift at joint 2 and 272 lb uplift at joint 4.

LOAD CASE(S) Standard

SEPTEMBER 21, 2005 TRUSS DESIGN ENGINEER:
THOMAS E. MILLER PE 56877, BYRON K. ANDERSON PE 60987
STRUCTURAL ENGINEERING AND INSPECTIONS, INC. EB 9196
16105 N. FLORIDA AVE. STE B, LUTZ, FL 33549

Job	Truss	Truss Type	Qty	Ply	Dwg.#092105618
L130833	T02G	COMMON	1	1	Job Reference (optional)

Builders FirstSource, Lake City, Fl 32055

6.200 s Jul 13 2005 MiTek Industries, Inc. Tue Sep 20 17:50:51 2005 Page 1

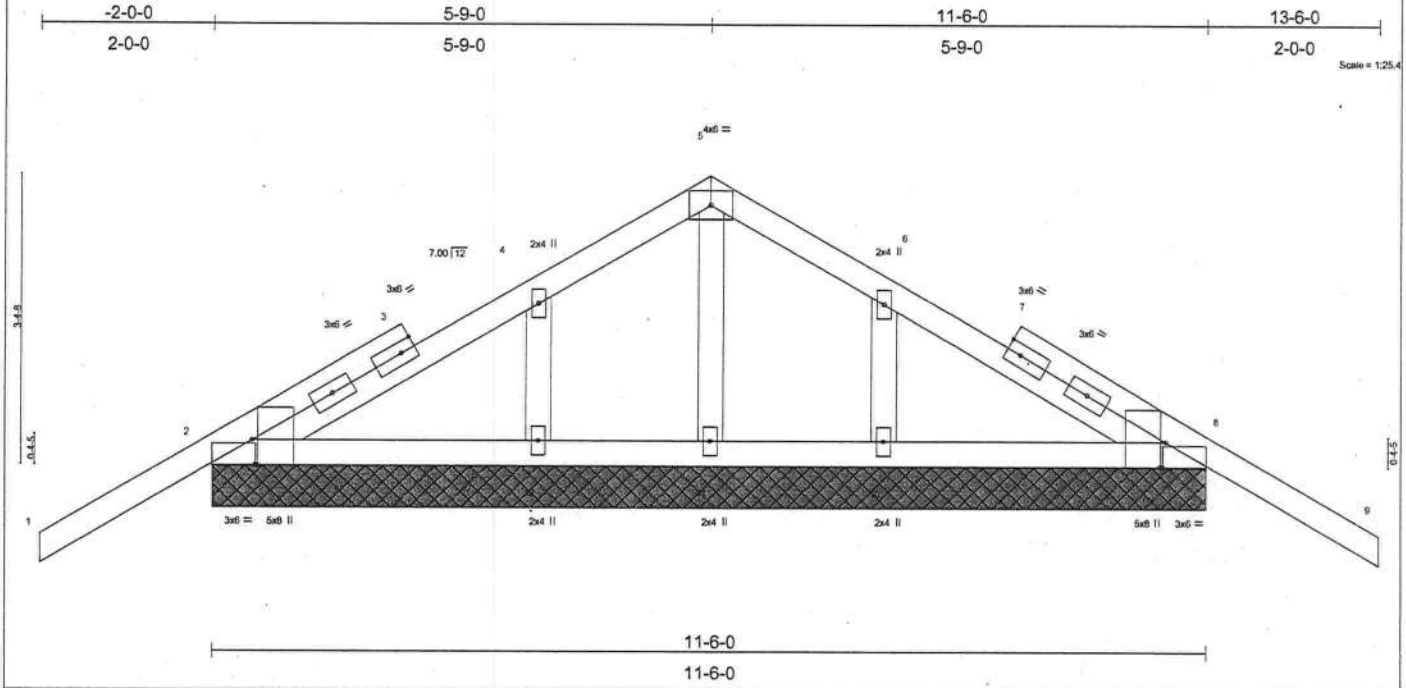

Plate Offsets (X,Y): [2:0-3-8,Edge], [2:0-0-7,Edge], [8:0-3-8,Edge], [8:0-0-7,Edge]

LOADING (psf)		SPACING	2-0-0	CSI		DEFL	in	(loc)	l/defl	L/d	PLATES	GRIP
TCLL	20.0	Plates Increase	1.25	TC	0.44	Vert(LL)	-0.04	9	n/r	90	MT20	244/190
TCDL	7.0	Lumber Increase	1.25	BC	0.05	Vert(TL)	-0.06	9	n/r	80		
BCLL	10.0	Rep Stress Incr	NO	WB	0.05	Horz(TL)	0.00	8	n/a	n/a		
BCDL	5.0	Code FBC2001/TPI2002		(Matrix)							Weight: 59 lb	

LUMBER
TOP CHORD 2 X 4 SYP No.2D
BOT CHORD 2 X 4 SYP No.2D
OTHERS 2 X 4 SYP No.3

BRACING
TOP CHORD Structural wood sheathing directly applied or 6-0-0 oc purlins.
BOT CHORD Rigid ceiling directly applied or 6-0-0 oc bracing.

REACTIONS (lb/size) 2=523/11-6-0, 8=523/11-6-0, 11=235/11-6-0, 12=416/11-6-0, 10=416/11-6-0
Max Horz 2=112(load case 4)
Max Uplift2=-288(load case 5), 8=-308(load case 6), 11=-40(load case 5), 12=-149(load case 5), 10=-153(load case 6)
Max Grav 2=524(load case 7), 8=524(load case 8), 11=235(load case 1), 12=419(load case 7), 10=419(load case 8)

FORCES (lb) - Maximum Compression/Maximum Tension
TOP CHORD 1-2=-14/112, 2-3=-83/81, 3-4=-56/114, 4-5=-51/113, 5-6=-51/113, 6-7=-11/114, 7-8=-83/48, 8-9=-14/112
BOT CHORD 2-12=-20/112, 11-12=-20/112, 10-11=-20/112, 8-10=-20/112
WEBS 5-11=-201/42, 4-12=-322/178, 6-10=-322/182

NOTES
1) Unbalanced roof live loads have been considered for this design.
2) Wind: ASCE 7-98; 110mph (3-second gust); h=20ft; TCDL=4.2psf; BCDL=3.0psf; Category II; Exp B; enclosed; MWFRS gable end zone and C-C Exterior(2) zone; Lumber DOL=1.60 plate grip DOL=1.60. This truss is designed for C-C for members and forces, and for MWFRS for reactions specified.
3) Truss designed for wind loads in the plane of the truss only. For studs exposed to wind (normal to the face), see MiTek "Standard Gable End Detail"
4) Gable requires continuous bottom chord bearing.
5) Gable studs spaced at 2-0-0 oc.
6) Provide mechanical connection (by others) of truss to bearing plate capable of withstanding 288 lb uplift at joint 2, 308 lb uplift at joint 8, 40 lb uplift at joint 11, 149 lb uplift at joint 12 and 153 lb uplift at joint 10.
7) In the LOAD CASE(S) section, loads applied to the face of the truss are noted as front (F) or back (B).

LOAD CASE(S) Standard
1) Regular: Lumber Increase=1.25, Plate Increase=1.25
Uniform Loads (plf)
Vert: 1-5=-114(F=-60), 5-9=-114(F=-60), 2-8=-30

SEPTEMBER 21, 2005 TRUSS DESIGN ENGINEER:
THOMAS E. MILLER PE 56877, BYRON K. ANDERSON PE 60987
STRUCTURAL ENGINEERING AND INSPECTIONS, INC. EB 9196
16105 N. FLORIDA AVE. STE B, LUTZ, FL 33549

Job	Truss	Truss Type	Qty	Ply	
L130833	T03	COMMON	1	1	Job Reference (optional)

Dwg.#092105619

Builders FirstSource, Lake City, Fl 32055

6.200 s Jul 13 2005 MiTek Industries, Inc. Tue Sep 20 17:50:51 2005 Page 1

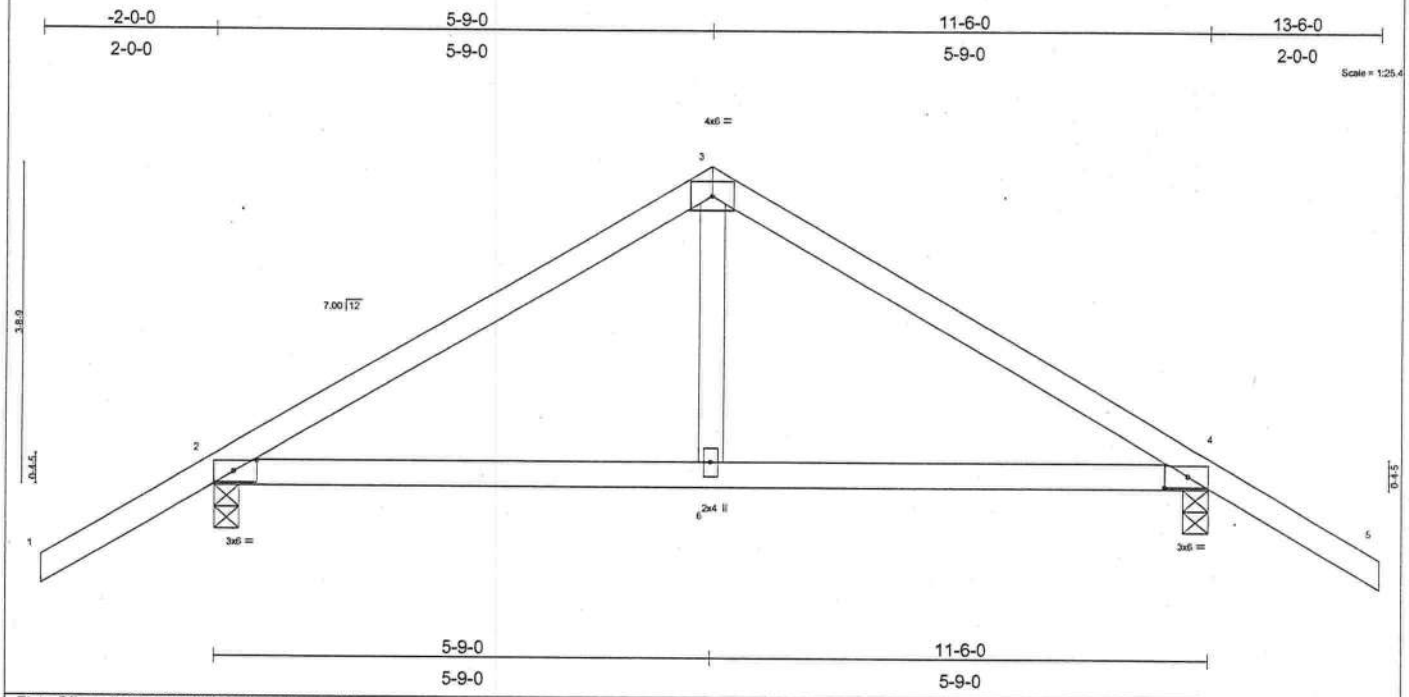

Plate Offsets (X,Y): [2:0-3-3,0-1-8], [4:0-3-3,0-1-8]

LOADING (psf)		SPACING	2-0-0	CSI		DEFL	in	(loc)	l/defl	L/d	PLATES	GRIP
TCLL	20.0	Plates Increase	1.25	TC	0.23	Vert(LL)	-0.03	4-6	>999	240	MT20	244/190
TCDL	7.0	Lumber Increase	1.25	BC	0.18	Vert(TL)	-0.04	4-6	>999	180		
BCLL	10.0	Rep Stress Incr	YES	WB	0.06	Horz(TL)	0.01	4	n/a	n/a		
BCDL	5.0	Code FBC2001/TPI2002		(Matrix)							Weight: 49 lb	

LUMBER
TOP CHORD 2 X 4 SYP No.2D
BOT CHORD 2 X 4 SYP No.2D
WEBS 2 X 4 SYP No.3

BRACING
TOP CHORD Structural wood sheathing directly applied or 6-0-0 oc purlins.
BOT CHORD Rigid ceiling directly applied or 10-0-0 oc bracing.

REACTIONS (lb/size) 2=587/0-3-8, 4=587/0-3-8
Max Horz 2=-124(load case 3)
Max Uplift2=-272(load case 5), 4=-272(load case 6)

FORCES (lb) - Maximum Compression/Maximum Tension
TOP CHORD 1-2=0/54, 2-3=-572/158, 3-4=-572/158, 4-5=0/54
BOT CHORD 2-6=-45/427, 4-6=-45/427
WEBS 3-6=0/192

NOTES
1) Unbalanced roof live loads have been considered for this design.
2) Wind: ASCE 7-98; 110mph (3-second gust); h=20ft; TCDL=4.2psf; BCDL=3.0psf; Category II; Exp B; enclosed; MWFRS gable end zone and C-C Exterior(2) zone; Lumber DOL=1.60 plate grip DOL=1.60. This truss is designed for C-C for members and forces, and for MWFRS for reactions specified.
3) Provide mechanical connection (by others) of truss to bearing plate capable of withstanding 272 lb uplift at joint 2 and 272 lb uplift at joint 4.

LOAD CASE(S) Standard

SEPTEMBER 21, 2005 TRUSS DESIGN ENGINEER:
THOMAS E. MILLER PE 56877, BYRON K. ANDERSON PE 60987
STRUCTURAL ENGINEERING AND INSPECTIONS, INC. EB 9196
16105 N. FLORIDA AVE. STE B, LUTZ, FL 33549

Job	Truss	Truss Type	Qty	Ply	Dwg.#092105620
L130833	T04	SPECIAL	1	1	Job Reference (optional)

Builders FirstSource, Lake City, Fl 32055

6.200 s Jul 13 2005 MiTek Industries, Inc. Tue Sep 20 17:50:52 2005 Page 1

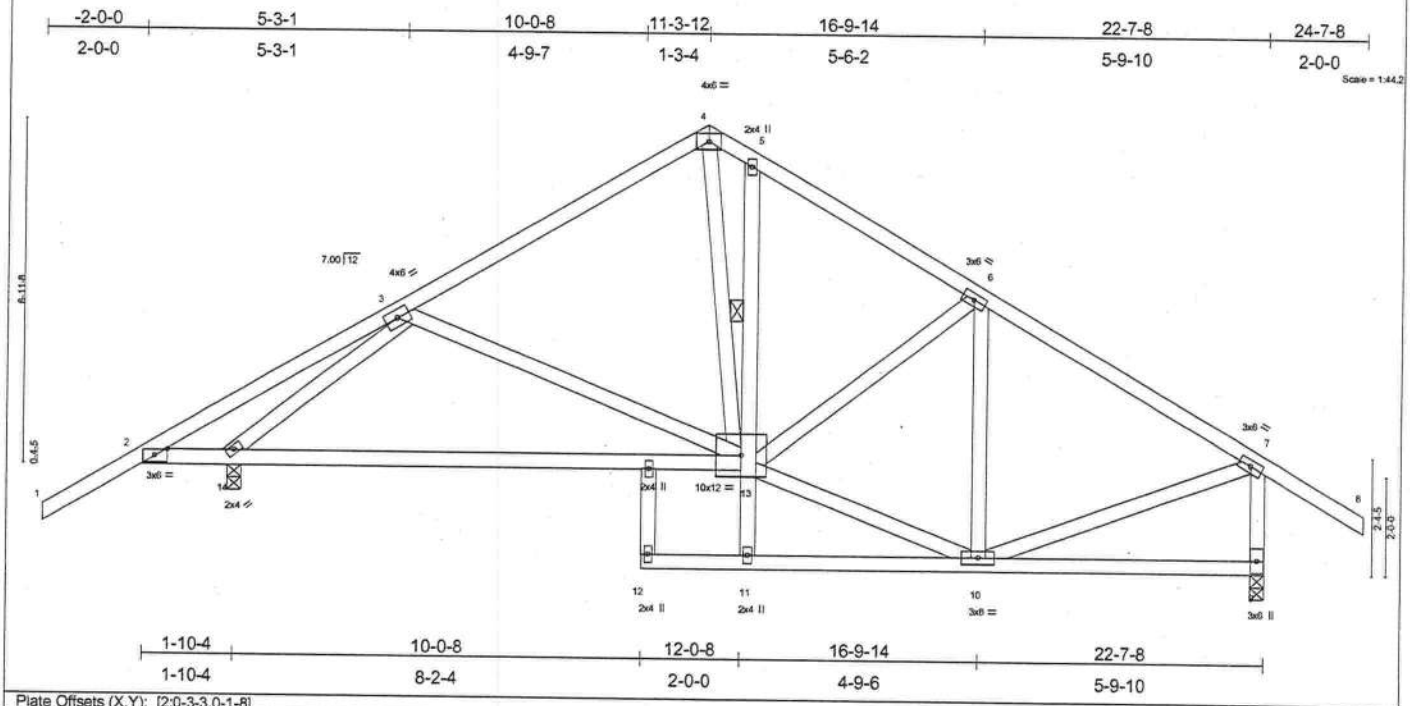

Plate Offsets (X,Y): [2:0-3-3,0-1-8]

LOADING (psf)		SPACING	2-0-0	CSI		DEFL	in	(loc)	l/defl	L/d	PLATES	GRIP
TCLL	20.0	Plates Increase	1.25	TC	0.34	Vert(LL)	0.48	13-14	>522	240	MT20	244/190
TCDL	7.0	Lumber Increase	1.25	BC	0.66	Vert(TL)	0.40	13-14	>630	180		
BCLL	10.0	Rep Stress Incr	YES	WB	0.47	Horz(TL)	0.03	9	n/a	n/a		
BCDL	5.0	Code FBC2001/TPI2002		(Matrix)							Weight: 159 lb	

LUMBER
TOP CHORD 2 X 4 SYP No.2D
BOT CHORD 2 X 4 SYP No.2D *Except*
B3 2 X 4 SYP No.3
WEBS 2 X 4 SYP No.3 *Except*
W9 2 X 4 SYP No.2D

BRACING
TOP CHORD Structural wood sheathing directly applied or 6-0-0 oc purlins, except end verticals.
BOT CHORD Rigid ceiling directly applied or 6-0-0 oc bracing. Except:
1 Row at midpt 5-13

REACTIONS (lb/size) 9=1006/0-3-8, 14=1171/0-3-8
Max Horz 14=281(load case 4)
Max Uplift9=-449(load case 5), 14=-729(load case 5)

FORCES (lb) - Maximum Compression/Maximum Tension
TOP CHORD 1-2=0/53, 2-3=-250/232, 3-4=-928/845, 4-5=-850/939, 5-6=-989/927, 6-7=-882/843, 7-8=0/58, 7-9=-920/832
BOT CHORD 2-14=-141/349, 13-14=-554/760, 11-13=-65/127, 5-13=-148/152, 11-12=0/0, 10-11=-104/190, 9-10=-11/52
WEBS 3-13=-117/161, 6-10=-422/186, 3-14=-1192/861, 7-10=-513/684, 4-13=-651/633, 10-13=-723/862, 6-13=-79/203

NOTES
1) Unbalanced roof live loads have been considered for this design.
2) Wind: ASCE 7-98; 110mph (3-second gust); h=20ft; TCDL=4.2psf; BCDL=3.0psf; Category II; Exp B; enclosed; MWFRS gable end zone and C-C Exterior(2) zone; cantilever left exposed ; end vertical right exposed; porch left exposed; Lumber DOL=1.60 plate grip DOL=1.60. This truss is designed for C-C for members and forces, and for MWFRS for reactions specified.
3) This truss is not designed to support a ceiling and is not intended for use where aesthetics are a consideration.
4) Provide mechanical connection (by others) of truss to bearing plate capable of withstanding 449 lb uplift at joint 9 and 729 lb uplift at joint 14.

LOAD CASE(S) Standard

SEPTEMBER 21, 2005 TRUSS DESIGN ENGINEER:
THOMAS E. MILLER PE 56877, BYRON K. ANDERSON PE 60987
STRUCTURAL ENGINEERING AND INSPECTIONS, INC. EB 9196
16105 N. FLORIDA AVE. STE B, LUTZ, FL 33549

Job	Truss	Truss Type	Qty	Ply	Dwg.#092105621
L130833	T04G	SPECIAL	1	1	Job Reference (optional)

Builders FirstSource, Lake City, Fl 32055

6.200 s Jul 13 2005 MiTek Industries, Inc. Tue Sep 20 17:50:54 2005 Page 1

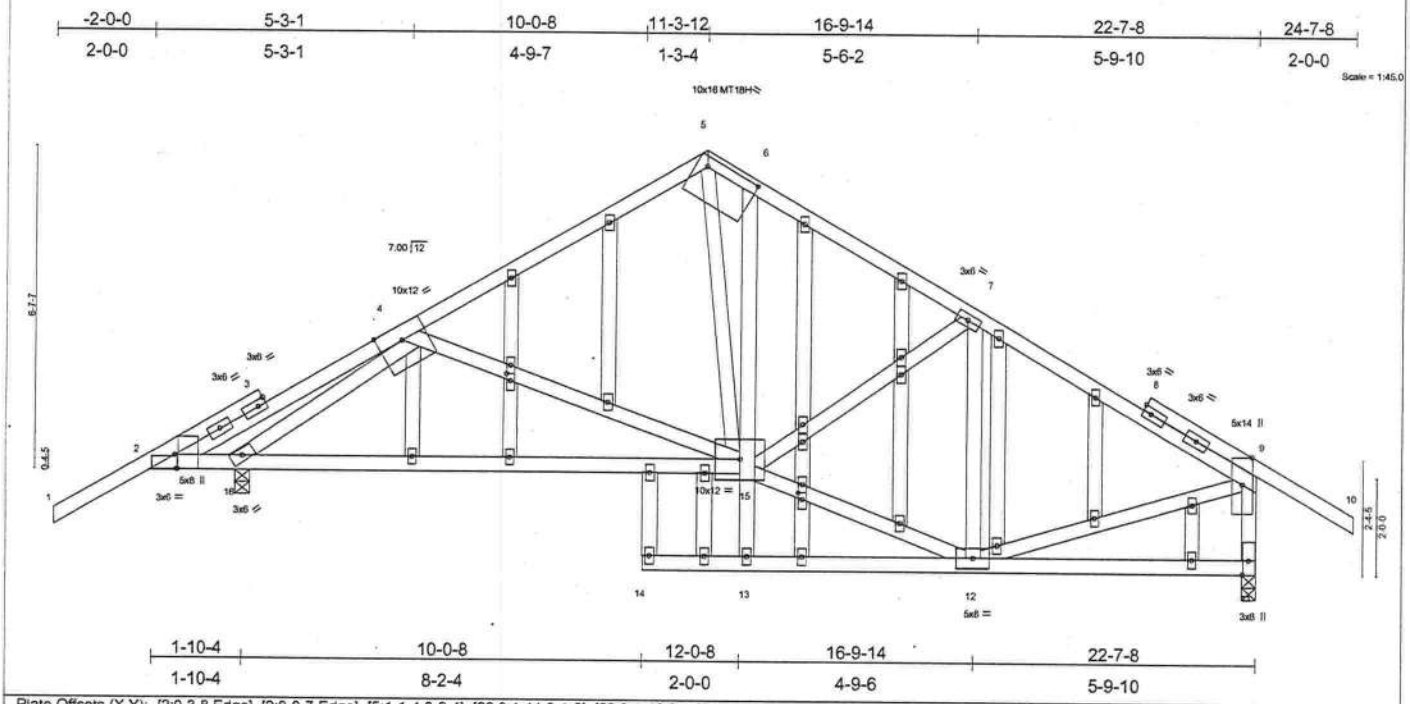

Plate Offsets (X,Y): [2:0-3-8,Edge], [2:0-0-7,Edge], [5:1-1-4,0-2-4], [22:0-1-11,0-1-0], [29:0-1-12,0-1-0]

LOADING (psf)		SPACING	2-0-0	CSI		DEFL	in	(loc)	l/defl	L/d	PLATES	GRIP
TCLL	20.0	Plates Increase	1.25	TC	0.74	Vert(LL)	0.49	15-16	>506	240	MT20	244/190
TCDL	7.0	Lumber Increase	1.25	BC	0.73	Vert(TL)	0.41	15-16	>610	180	MT18H	244/190
BCLL	10.0	Rep Stress Incr	NO	WB	0.90	Horz(TL)	0.05	11	n/a	n/a		
BCDL	5.0	Code FBC2001/TPI2002		(Matrix)							Weight: 209 lb	

LUMBER

TOP CHORD 2 X 4 SYP No.2D
BOT CHORD 2 X 4 SYP No.2D *Except*
B3 2 X 4 SYP No.3
WEBS 2 X 4 SYP No.3 *Except*
W9 2 X 4 SYP No.2D
OTHERS 2 X 4 SYP No.3

BRACING

TOP CHORD Structural wood sheathing directly applied or 4-2-4 oc purlins, except end verticals.
BOT CHORD Rigid ceiling directly applied or 5-0-3 oc bracing.

REACTIONS (lb/size) 11=1749/0-3-8, 16=2025/0-3-8
Max Horz 16=269(load case 4)
Max Uplift11=-947(load case 5), 16=-1311(load case 5)

FORCES (lb) - Maximum Compression/Maximum Tension
TOP CHORD 1-2=-49/112, 2-3=-509/486, 3-4=-574/725, 4-5=-1633/1504, 5-6=-1413/1486, 6-7=-1730/1626, 7-8=-1424/1415, 8-9=-1569/1477, 9-10=-49/110, 9-11=-1653/1542
BOT CHORD 2-16=-526/611, 15-16=-1353/1456, 13-15=-71/134, 6-15=-164/214, 13-14=0/0, 12-13=-86/220, 11-12=-130/176
WEBS 4-15=-238/235, 7-12=-787/569, 4-16=-2494/2078, 9-12=-928/1115, 5-15=-861/850, 12-15=-1336/1426, 7-15=-86/192

NOTES

1) Unbalanced roof live loads have been considered for this design.
2) Wind: ASCE 7-98; 110mph (3-second gust); h=20ft; TCDL=4.2psf; BCDL=3.0psf; Category II; Exp B; enclosed; MWFRS gable end zone and C-C Exterior(2) zone; cantilever left exposed ; end vertical right exposed; porch left exposed; Lumber DOL=1.60 plate grip DOL=1.60. This truss is designed for C-C for members and forces, and for MWFRS for reactions specified.
3) Truss designed for wind loads in the plane of the truss only. For studs exposed to wind (normal to the face), see MiTek "Standard Gable End Detail"
4) This truss is not designed to support a ceiling and is not intended for use where aesthetics are a consideration.
5) All plates are MT20 plates unless otherwise indicated.
6) All plates are 2x4 MT20 unless otherwise indicated.
7) The following joint(s) require plate inspection per the Tooth Count Method when this truss is chosen for quality assurance inspection: 5.
8) Gable studs spaced at 2-0-0 oc.
9) Provide mechanical connection (by others) of truss to bearing plate capable of withstanding 947 lb uplift at joint 11 and 1311 lb uplift at joint 16.
10) In the LOAD CASE(S) section, loads applied to the face of the truss are noted as front (F) or back (B).

LOAD CASE(S) Standard
1) Regular: Lumber Increase=1.25, Plate Increase=1.25
Uniform Loads (plf)
Vert: 1-5=-114(F=-60), 5-9=-114(F=-60), 9-10=-114(F=-60), 2-15=-30, 13-14=-30, 11-13=-30

SEPTEMBER 21, 2005 TRUSS DESIGN ENGINEER:
THOMAS E. MILLER PE 56877, BYRON K. ANDERSON PE 60987
STRUCTURAL ENGINEERING AND INSPECTIONS, INC. EB 9196
16105 N. FLORIDA AVE. STE B, LUTZ, FL 33549

Job	Truss	Truss Type	Qty	Ply	
L130833	T05	SPECIAL	2	1	Job Reference (optional)

Dwg.#092105622

Builders FirstSource, Lake City, Fl 32055

6.200 s Jul 13 2005 MiTek Industries, Inc. Tue Sep 20 17:50:55 2005 Page 1

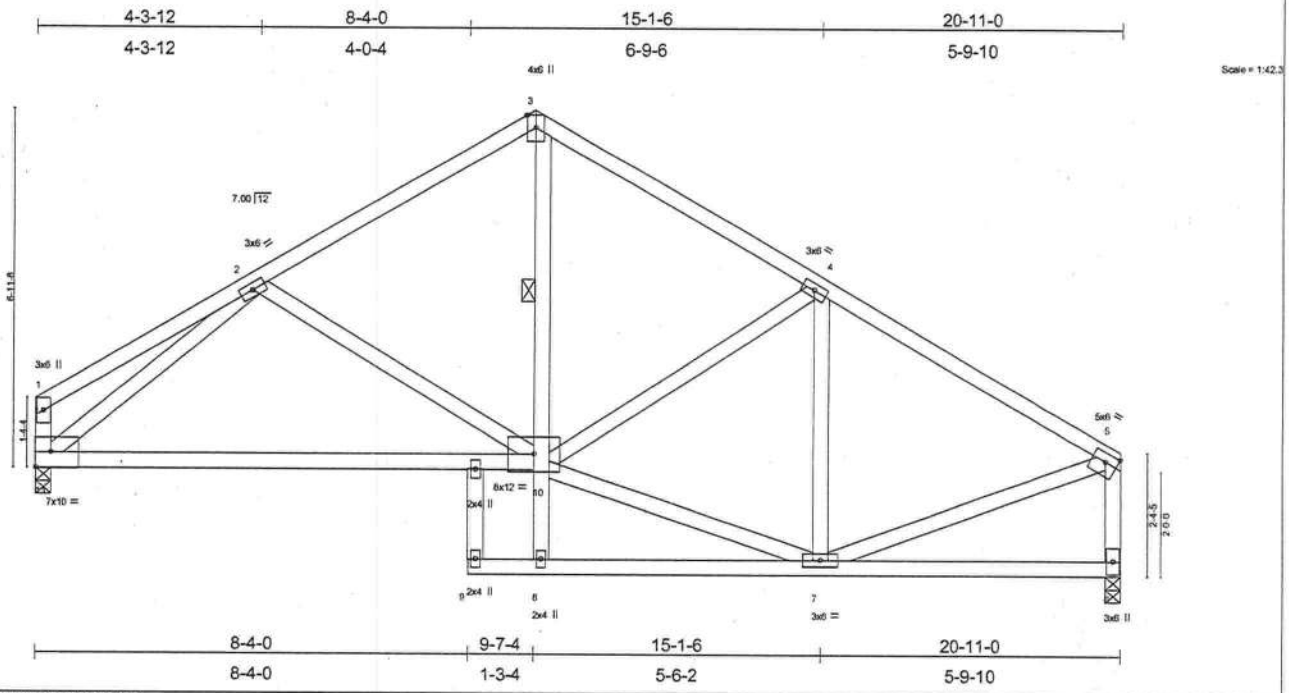

Plate Offsets (X,Y): [5:0-2-12,0-2-0]

LOADING (psf)		SPACING	2-0-0	CSI		DEFL	in	(loc)	l/defl	L/d	PLATES	GRIP
TCLL	20.0	Plates Increase	1.25	TC	0.53	Vert(LL)	0.35	10-11	>710	240	MT20	244/190
TCDL	7.0	Lumber Increase	1.25	BC	0.54	Vert(TL)	0.29	10-11	>855	180		
BCLL	10.0	Rep Stress Incr	YES	WB	0.40	Horz(TL)	0.03	6	n/a	n/a		
BCDL	5.0	Code FBC2001/TPI2002		(Matrix)							Weight: 139 lb	

LUMBER
TOP CHORD 2 X 4 SYP No.2D
BOT CHORD 2 X 4 SYP No.2D *Except*
B3 2 X 4 SYP No.3
WEBS 2 X 4 SYP No.3 *Except*
W1 2 X 4 SYP No.2D, W9 2 X 4 SYP No.2D

BRACING
TOP CHORD Structural wood sheathing directly applied or 6-0-0 oc purlins, except end verticals.
BOT CHORD Rigid ceiling directly applied or 6-0-0 oc bracing. Except:
1 Row at midpt 3-10

REACTIONS (lb/size) 6=885/0-3-8, 11=890/0-3-8
Max Horz 11=243(load case 4)
Max Uplift6=-440(load case 5), 11=-501(load case 5)

FORCES (lb) - Maximum Compression/Maximum Tension
TOP CHORD 1-2=-390/538, 2-3=-934/920, 3-4=-941/920, 4-5=-902/876, 1-11=-278/339, 5-6=-798/732
BOT CHORD 10-11=-599/825, 8-10=-105/118, 3-10=-713/565, 8-9=0/0, 7-8=-58/75, 6-7=-67/98
WEBS 2-10=-137/189, 4-7=-347/153, 2-11=-708/425, 5-7=-559/657, 7-10=-710/813, 4-10=-112/196

NOTES
1) Unbalanced roof live loads have been considered for this design.
2) Wind: ASCE 7-98; 110mph (3-second gust); h=20ft; TCDL=4.2psf; BCDL=3.0psf; Category II; Exp B; enclosed; MWFRS gable end zone and C-C Exterior(2) zone; end vertical right exposed; porch left exposed; Lumber DOL=1.60 plate grip DOL=1.60. This truss is designed for C-C for members and forces, and for MWFRS for reactions specified.
3) Provide mechanical connection (by others) of truss to bearing plate capable of withstanding 440 lb uplift at joint 6 and 501 lb uplift at joint 11.

LOAD CASE(S) Standard

SEPTEMBER 21, 2005 TRUSS DESIGN ENGINEER:
THOMAS E. MILLER PE 56877, BYRON K. ANDERSON PE 60987
STRUCTURAL ENGINEERING AND INSPECTIONS, INC. EB 9196
16105 N. FLORIDA AVE. STE B, LUTZ, FL 33549

Job	Truss	Truss Type	Qty	Ply	
L130833	T06	COMMON	1	2	Job Reference (optional)

Dwg.#092105623

Builders FirstSource, Lake City, Fl 32055

6.200 s Jul 13 2005 MiTek Industries, Inc. Tue Sep 20 17:50:56 2005 Page 1

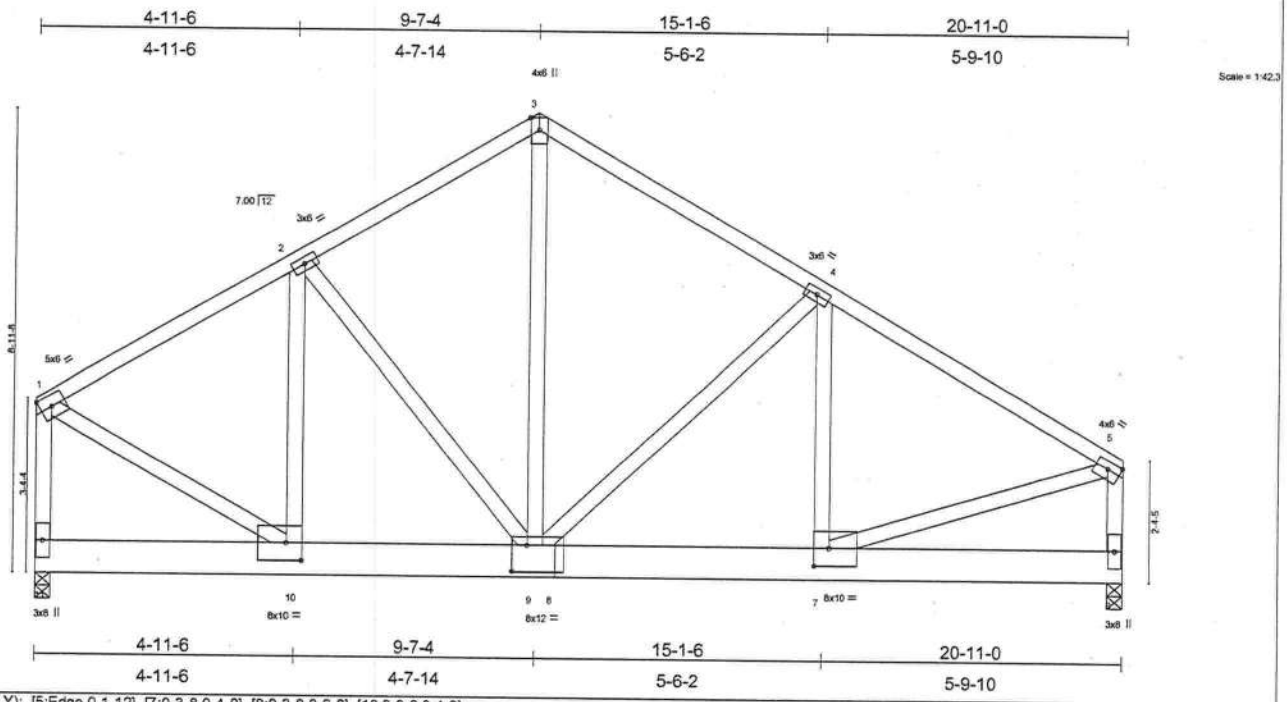

Plate Offsets (X,Y): [5:Edge,0-1-12], [7:0-3-8,0-4-0], [8:0-3-8,0-6-0], [10:0-3-8,0-4-0]

LOADING (psf)		SPACING	2-0-0	CSI		DEFL	in	(loc)	l/defl	L/d	PLATES	GRIP
TCLL	20.0	Plates Increase	1.25	TC	0.63	Vert(LL)	-0.09	7-9	>999	240	MT20	244/190
TCDL	7.0	Lumber Increase	1.25	BC	0.26	Vert(TL)	-0.15	7-9	>999	180		
BCLL	10.0	Rep Stress Incr	NO	WB	0.82	Horz(TL)	0.02	6	n/a	n/a		
BCDL	5.0	Code FBC2001/TPI2002		(Matrix)							Weight: 343 lb	

LUMBER
TOP CHORD 2 X 4 SYP No.2D
BOT CHORD 2 X 8 SYP 2400F 2.0E
WEBS 2 X 4 SYP No.3 *Except*
W1 2 X 4 SYP No.2D, W9 2 X 4 SYP No.2D

BRACING
TOP CHORD Structural wood sheathing directly applied or 5-4-9 oc purlins, except end verticals.
BOT CHORD Rigid ceiling directly applied or 10-0-0 oc bracing.

REACTIONS (lb/size) 11=6434/0-3-8, 6=6434/0-3-8
Max Horz 11=-222(load case 2)
Max Uplift11=-2419(load case 4), 6=-2428(load case 5)

FORCES (lb) - Maximum Compression/Maximum Tension
TOP CHORD 1-2=-5000/1890, 2-3=-4713/1876, 3-4=-4743/1866, 4-5=-6174/2328, 1-11=-5159/1952, 5-6=-4927/1876
BOT CHORD 10-11=-263/178, 9-10=-1640/4247, 8-9=-1929/5251, 7-8=-1929/5251, 6-7=-211/451
WEBS 2-10=-146/295, 2-9=-395/262, 3-9=-1708/4382, 4-9=-1711/781, 4-7=-636/1702, 1-10=-1775/4785, 5-7=-1857/5084

NOTES
1) 2-ply truss to be connected together with 0.131"x3" Nails as follows:
Top chords connected as follows: 2 X 4 - 1 row at 0-9-0 oc.
Bottom chords connected as follows: 2 X 8 - 2 rows at 0-7-0 oc.
Webs connected as follows: 2 X 4 - 1 row at 0-9-0 oc.
2) All loads are considered equally applied to all plies, except if noted as front (F) or back (B) face in the LOAD CASE(S) section. Ply to ply connections have been provided to distribute only loads noted as (F) or (B), unless otherwise indicated.
3) Unbalanced roof live loads have been considered for this design.
4) Wind: ASCE 7-98; 110mph (3-second gust); h=20ft; TCDL=4.2psf; BCDL=3.0psf; Category II; Exp B; enclosed; MWFRS gable end zone; Lumber DOL=1.60 plate grip DOL=1.60.
5) Provide mechanical connection (by others) of truss to bearing plate capable of withstanding 2419 lb uplift at joint 11 and 2428 lb uplift at joint 6.
6) Girder carries tie-in span(s): 28-0-0 from 0-0-0 to 20-11-0

LOAD CASE(S) Standard
1) Regular: Lumber Increase=1.25, Plate Increase=1.25
Uniform Loads (plf)
Vert: 1-3=-54, 3-5=-54, 6-11=-570(F=-540)

SEPTEMBER 21, 2005 TRUSS DESIGN ENGINEER:
THOMAS E. MILLER PE 56877, BYRON K. ANDERSON PE 60987
STRUCTURAL ENGINEERING AND INSPECTIONS, INC. EB 9196
16105 N. FLORIDA AVE. STE B, LUTZ, FL 33549

Job	Truss	Truss Type	Qty	Ply	
L130833	T07	MONO HIP	1	1	Job Reference (optional)

Dwg.#092105624

Builders FirstSource, Lake City, Fl 32055

6.200 s Jul 13 2005 MiTek Industries, Inc. Tue Sep 20 17:50:57 2005 Page 1

-2-0-0	7-0-0	11-11-8	16-9-4	21-7-0	26-6-8
2-0-0	7-0-0	4-11-8	4-9-12	4-9-12	4-11-8

Scale: 1/4"=1'

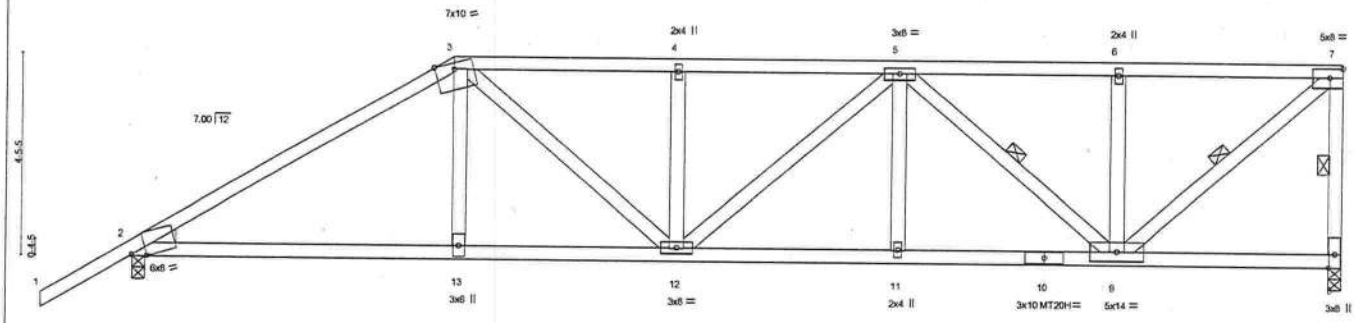

7-0-0	11-11-8	16-9-4	21-7-0	26-6-8
7-0-0	4-11-8	4-9-12	4-9-12	4-11-8

Plate Offsets (X,Y): [2:0-3-15,Edge]

LOADING (psf)		SPACING	2-0-0	CSI		DEFL	in	(loc)	l/defl	L/d	PLATES	GRIP
TCLL	20.0	Plates Increase	1.25	TC	0.73	Vert(LL)	-0.22	11-12	>999	240	MT20	244/190
TCDL	7.0	Lumber Increase	1.25	BC	0.79	Vert(TL)	-0.36	11-12	>886	180	MT20H	187/143
BCLL	10.0	Rep Stress Incr	NO	WB	0.99	Horz(TL)	0.11	8	n/a	n/a		
BCDL	5.0	Code FBC2001/TPI2002		(Matrix)							Weight: 149 lb	

LUMBER
TOP CHORD 2 X 4 SYP No.2D
BOT CHORD 2 X 4 SYP No.2D
WEBS 2 X 4 SYP No.3
WEDGE
Left: 2 X 4 SYP No.3

BRACING
TOP CHORD Structural wood sheathing directly applied or 2-11-8 oc purlins, except end verticals.
BOT CHORD Rigid ceiling directly applied or 4-5-15 oc bracing.
WEBS 1 Row at midpt 7-8, 5-9, 7-9

REACTIONS (lb/size) 8=2449/0-3-8, 2=2323/0-3-8
Max Horz 2=265(load case 4)
Max Uplift8=-1408(load case 2), 2=-1152(load case 4)

FORCES (lb) - Maximum Compression/Maximum Tension
TOP CHORD 1-2=0/54, 2-3=-3863/2000, 3-4=-4004/2235, 4-5=-4004/2236, 5-6=-2410/1378, 6-7=-2410/1378, 7-8=-2287/1420
BOT CHORD 2-13=-1760/3234, 12-13=-1772/3263, 11-12=-2097/3716, 10-11=-2097/3716, 9-10=-2097/3716, 8-9=-41/70
WEBS 3-13=-323/822, 3-12=-747/965, 4-12=-558/653, 5-12=-233/380, 5-11=0/316, 5-9=-1725/950, 6-9=-583/620, 7-9=-1765/3089

NOTES
1) Wind: ASCE 7-98; 110mph (3-second gust); h=20ft; TCDL=4.2psf; BCDL=3.0psf; Category II; Exp B; enclosed; MWFRS gable end zone; Lumber DOL=1.60 plate grip DOL=1.60.
2) Provide adequate drainage to prevent water ponding.
3) All plates are MT20 plates unless otherwise indicated.
4) Provide mechanical connection (by others) of truss to bearing plate capable of withstanding 1408 lb uplift at joint 8 and 1152 lb uplift at joint 2.
5) Girder carries hip end with 0-0-0 right side setback, 7-0-0 left side setback, and 7-0-0 end setback.
6) Hanger(s) or other connection device(s) shall be provided sufficient to support concentrated load(s) 539 lb down and 374 lb up at 7-0-0 on bottom chord. The design/selection of such connection device(s) is the responsibility of others.
7) In the LOAD CASE(S) section, loads applied to the face of the truss are noted as front (F) or back (B).

LOAD CASE(S) Standard
1) Regular: Lumber Increase=1.25, Plate Increase=1.25
Uniform Loads (plf)
Vert: 1-3=-54, 3-7=-118(F=-64), 2-13=-30, 8-13=-65(F=-35)
Concentrated Loads (lb)
Vert: 13=-539(F)

SEPTEMBER 21, 2005 TRUSS DESIGN ENGINEER:
THOMAS E. MILLER PE 56877, BYRON K. ANDERSON PE 60987
STRUCTURAL ENGINEERING AND INSPECTIONS, INC. EB 9196
16105 N. FLORIDA AVE. STE B, LUTZ, FL 33549

Job	Truss	Truss Type	Qty	Ply	
L130833	T08	MONO HIP	1	1	Job Reference (optional)

Dwg.#092105625

Builders FirstSource, Lake City, Fl 32055

6.200 s Jul 13 2005 MiTek Industries, Inc. Tue Sep 20 17:50:57 2005 Page 1

-2-0-0	4-8-13	9-0-0	14-9-0	20-6-0	26-6-8
2-0-0	4-8-13	4-3-3	5-9-0	5-9-0	6-0-8

Scale: 1/4"=1'

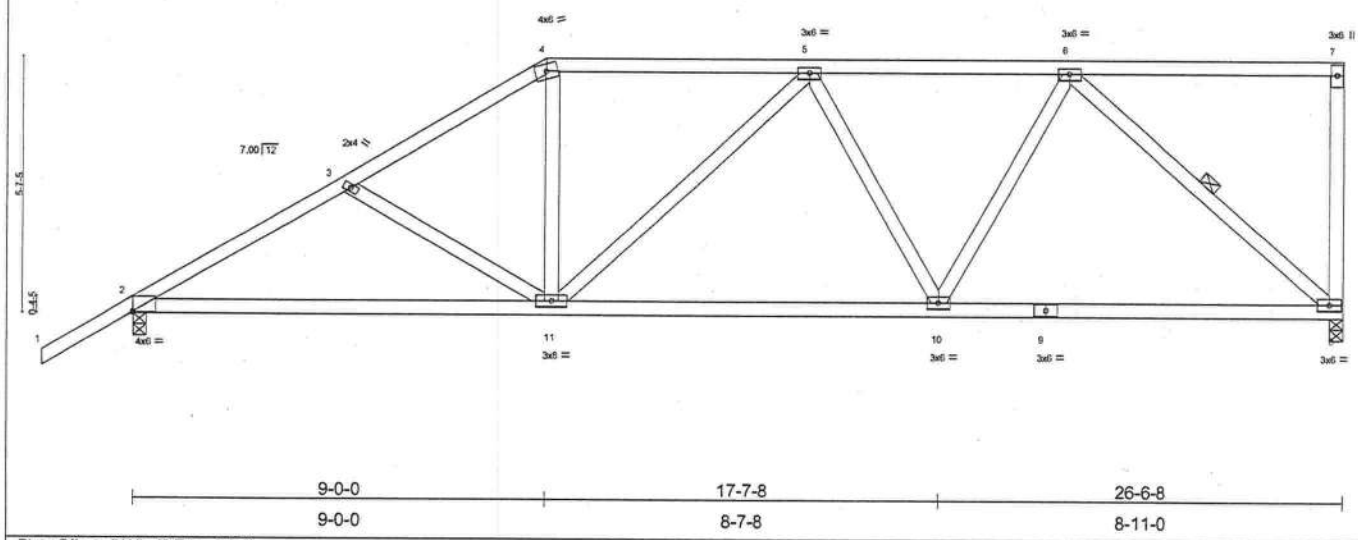

9-0-0	17-7-8	26-6-8
9-0-0	8-7-8	8-11-0

Plate Offsets (X,Y): [2:Edge,0-0-2]

LOADING (psf)		SPACING	2-0-0	CSI		DEFL	in	(loc)	l/defl	L/d	PLATES	GRIP
TCLL	20.0	Plates Increase	1.25	TC	0.53	Vert(LL)	-0.14	2-11	>999	240	MT20	244/190
TCDL	7.0	Lumber Increase	1.25	BC	0.46	Vert(TL)	-0.25	2-11	>999	180		
BCLL	10.0	Rep Stress Incr	YES	WB	0.39	Horz(TL)	0.05	8	n/a	n/a		
BCDL	5.0	Code FBC2001/TPI2002		(Matrix)							Weight: 147 lb	

LUMBER
TOP CHORD 2 X 4 SYP No.2D
BOT CHORD 2 X 4 SYP No.2D
WEBS 2 X 4 SYP No.3

BRACING
TOP CHORD Structural wood sheathing directly applied or 4-8-12 oc purlins, except end verticals.
BOT CHORD Rigid ceiling directly applied or 7-11-1 oc bracing.
WEBS 1 Row at midpt 6-8

REACTIONS (lb/size) 8=1098/0-3-8, 2=1223/0-3-8
Max Horz 2=317(load case 5)
Max Uplift8=-433(load case 3), 2=-404(load case 5)

FORCES (lb) - Maximum Compression/Maximum Tension
TOP CHORD 1-2=0/54, 2-3=-1726/602, 3-4=-1513/542, 4-5=-1269/524, 5-6=-1225/474, 6-7=-48/10, 7-8=-152/121
BOT CHORD 2-11=-664/1439, 10-11=-569/1351, 9-10=-410/957, 8-9=-410/957
WEBS 3-11=-212/202, 4-11=-68/456, 5-11=-113/242, 5-10=-265/198, 6-10=-136/564, 6-8=-1224/541

NOTES
1) Wind: ASCE 7-98; 110mph (3-second gust); h=20ft; TCDL=4.2psf; BCDL=3.0psf; Category II; Exp B; enclosed; MWFRS gable end zone and C-C Exterior(2) zone; Lumber DOL=1.60 plate grip DOL=1.60. This truss is designed for C-C for members and forces, and for MWFRS for reactions specified.
2) Provide adequate drainage to prevent water ponding.
3) Provide mechanical connection (by others) of truss to bearing plate capable of withstanding 433 lb uplift at joint 8 and 404 lb uplift at joint 2.

LOAD CASE(S) Standard

SEPTEMBER 21, 2005 TRUSS DESIGN ENGINEER:
THOMAS E. MILLER PE 56877, BYRON K. ANDERSON PE 60987
STRUCTURAL ENGINEERING AND INSPECTIONS, INC. EB 9196
16105 N. FLORIDA AVE. STE B, LUTZ, FL 33549

Job	Truss	Truss Type	Qty	Ply	
L130833	T09	MONO HIP	1	1	Job Reference (optional)

Dwg.#092105626

Builders FirstSource, Lake City, Fl 32055

6.200 s Jul 13 2005 MiTek Industries, Inc. Tue Sep 20 17:50:58 2005 Page 1

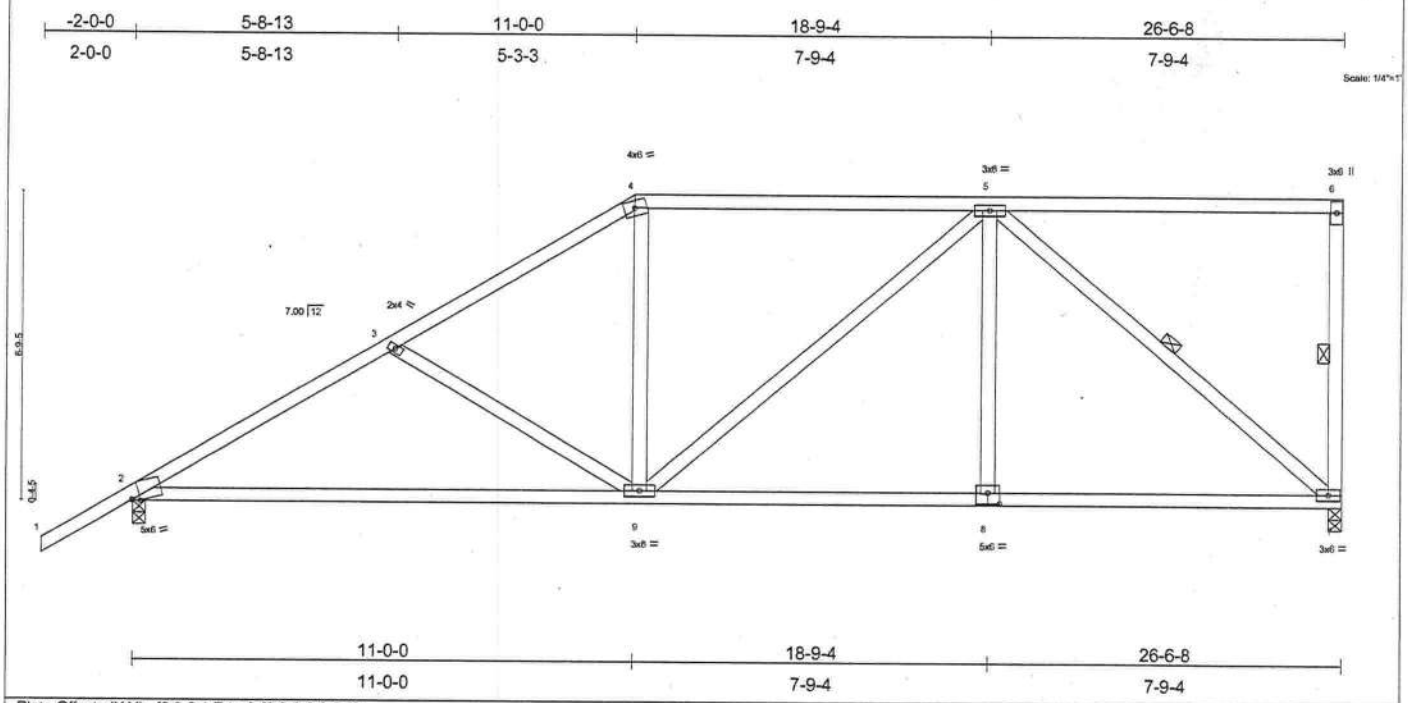

Plate Offsets (X,Y): [2:0-2-1,Edge], [8:0-3-0,0-3-0]

LOADING (psf)		SPACING	2-0-0	CSI		DEFL	in	(loc)	l/defl	L/d	PLATES	GRIP
TCLL	20.0	Plates Increase	1.25	TC	0.57	Vert(LL)	-0.31	2-9	>999	240	MT20	244/190
TCDL	7.0	Lumber Increase	1.25	BC	0.60	Vert(TL)	-0.53	2-9	>589	180		
BCLL	10.0	Rep Stress Incr	YES	WB	0.58	Horz(TL)	0.05	7	n/a	n/a		
BCDL	5.0	Code FBC2001/TPI2002		(Matrix)							Weight: 151 lb	

LUMBER
TOP CHORD 2 X 4 SYP No.2D
BOT CHORD 2 X 4 SYP No.2D
WEBS 2 X 4 SYP No.3

BRACING
TOP CHORD Structural wood sheathing directly applied or 4-6-6 oc purlins, except end verticals.
BOT CHORD Rigid ceiling directly applied or 7-10-4 oc bracing.
WEBS 1 Row at midpt 6-7, 5-7

REACTIONS (lb/size) 7=1098/0-3-8, 2=1223/0-3-8
Max Horz 2=371(load case 5)
Max Uplift7=-391(load case 4), 2=-416(load case 5)

FORCES (lb) - Maximum Compression/Maximum Tension
TOP CHORD 1-2=0/54, 2-3=-1665/570, 3-4=-1388/486, 4-5=-1144/485, 5-6=-42/17, 6-7=-186/150
BOT CHORD 2-9=-678/1390, 8-9=-412/979, 7-8=-412/979
WEBS 3-9=-294/266, 4-9=0/316, 5-9=-143/216, 5-8=0/207, 5-7=-1230/520

NOTES
1) Wind: ASCE 7-98; 110mph (3-second gust); h=20ft; TCDL=4.2psf; BCDL=3.0psf; Category II; Exp B; enclosed; MWFRS gable end zone and C-C Exterior(2) zone; Lumber DOL=1.60 plate grip DOL=1.60. This truss is designed for C-C for members and forces, and for MWFRS for reactions specified.
2) Provide adequate drainage to prevent water ponding.
3) Provide mechanical connection (by others) of truss to bearing plate capable of withstanding 391 lb uplift at joint 7 and 416 lb uplift at joint 2.

LOAD CASE(S) Standard

SEPTEMBER 21, 2005 TRUSS DESIGN ENGINEER:
THOMAS E. MILLER PE 56877, BYRON K. ANDERSON PE 60987
STRUCTURAL ENGINEERING AND INSPECTIONS, INC. EB 9196
16105 N. FLORIDA AVE. STE B, LUTZ, FL 33549

Job	Truss	Truss Type	Qty	Ply	
L130833	T10	HIP	1	1	Job Reference (optional)

Dwg.#092105627

Builders FirstSource, Lake City, Fl 32055

6.200 s Jul 13 2005 MiTek Industries, Inc. Tue Sep 20 17:50:59 2005 Page 1

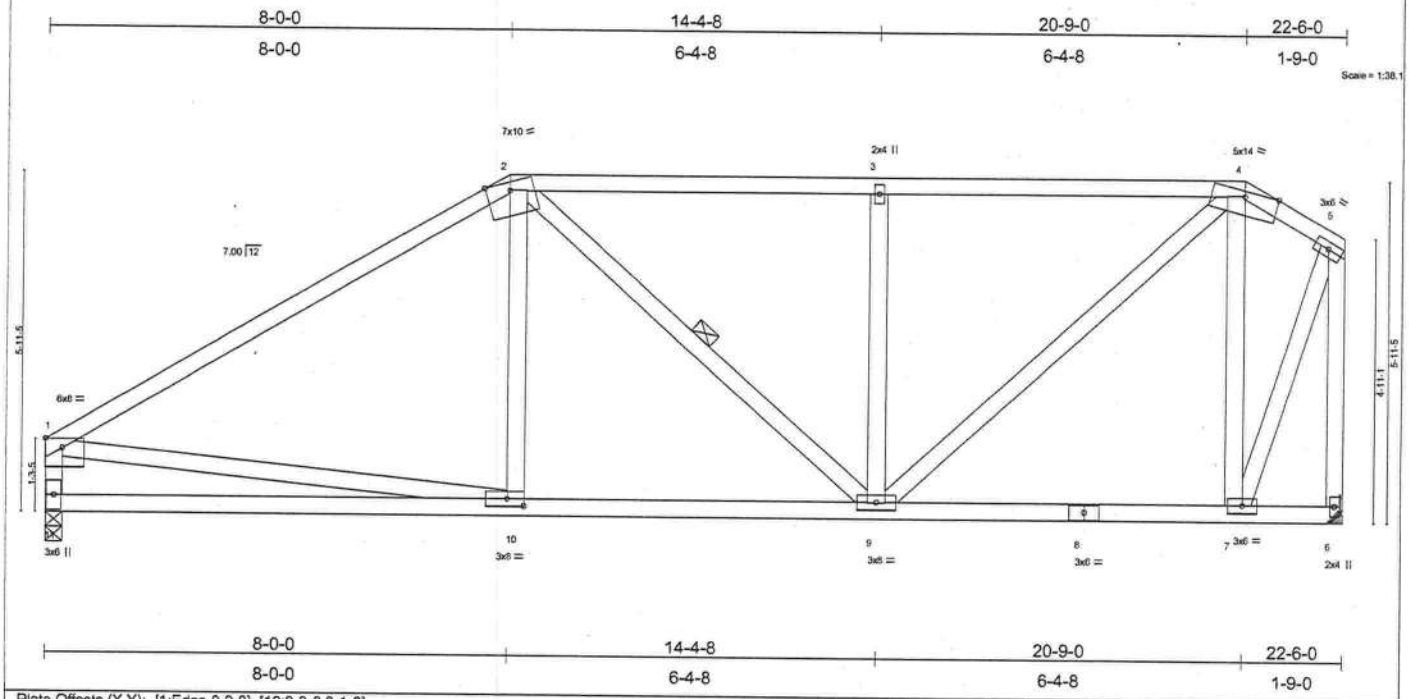

Plate Offsets (X,Y): [1:Edge,0-2-0], [10:0-3-8,0-1-8]

LOADING (psf)		SPACING 2-0-0		CSI		DEFL	in	(loc)	l/defl	L/d	PLATES	GRIP
TCLL	20.0	Plates Increase	1.25	TC	0.47	Vert(LL)	-0.07	10-11	>999	240	MT20	244/190
TCDL	7.0	Lumber Increase	1.25	BC	0.29	Vert(TL)	-0.12	10-11	>999	180		
BCLL	10.0	Rep Stress Incr	YES	WB	0.46	Horz(TL)	0.02	6	n/a	n/a		
BCDL	5.0	Code FBC2001/TPI2002		(Matrix)							Weight: 144 lb	

LUMBER
TOP CHORD 2 X 4 SYP No.2D
BOT CHORD 2 X 4 SYP No.2D
WEBS 2 X 4 SYP No.3 *Except*
W1 2 X 4 SYP No.2D, W6 2 X 4 SYP No.2D

BRACING
TOP CHORD Structural wood sheathing directly applied or 5-8-1 oc purlins, except end verticals.
BOT CHORD Rigid ceiling directly applied or 10-0-0 oc bracing.
WEBS 1 Row at midpt 2-9

REACTIONS (lb/size) 11=933/0-3-8, 6=933/Mechanical
Max Horz 11=187(load case 5)
Max Uplift11=-265(load case 4), 6=-342(load case 4)

FORCES (lb) - Maximum Compression/Maximum Tension
TOP CHORD 1-2=-1155/410, 2-3=-890/406, 3-4=-890/405, 4-5=-328/134, 1-11=-806/343, 5-6=-940/363
BOT CHORD 10-11=-424/434, 9-10=-395/906, 8-9=-119/287, 7-8=-119/287, 6-7=-2/5
WEBS 2-10=0/152, 2-9=-181/117, 3-9=-368/334, 4-9=-378/810, 4-7=-649/381, 1-10=-330/526, 5-7=-367/853

NOTES
1) Unbalanced roof live loads have been considered for this design.
2) Wind: ASCE 7-98; 110mph (3-second gust); h=20ft; TCDL=4.2psf; BCDL=3.0psf; Category II; Exp B; enclosed; MWFRS gable end zone and C-C Exterior(2) zone; Lumber DOL=1.60 plate grip DOL=1.60. This truss is designed for C-C for members and forces, and for MWFRS for reactions specified.
3) Provide adequate drainage to prevent water ponding.
4) Refer to girder(s) for truss to truss connections.
5) Provide mechanical connection (by others) of truss to bearing plate capable of withstanding 265 lb uplift at joint 11 and 342 lb uplift at joint 6.

LOAD CASE(S) Standard

SEPTEMBER 21, 2005 TRUSS DESIGN ENGINEER:
THOMAS E. MILLER PE 56877, BYRON K. ANDERSON PE 60987
STRUCTURAL ENGINEERING AND INSPECTIONS, INC. EB 9196
16105 N. FLORIDA AVE. STE B, LUTZ, FL 33549

Job	Truss	Truss Type	Qty	Ply	
L130833	T11	HIP	1	1	Job Reference (optional)

Dwg.#092105628

Builders FirstSource, Lake City, Fl 32055

6.200 s Jul 13 2005 MiTek Industries, Inc. Tue Sep 20 17:51:00 2005 Page 1

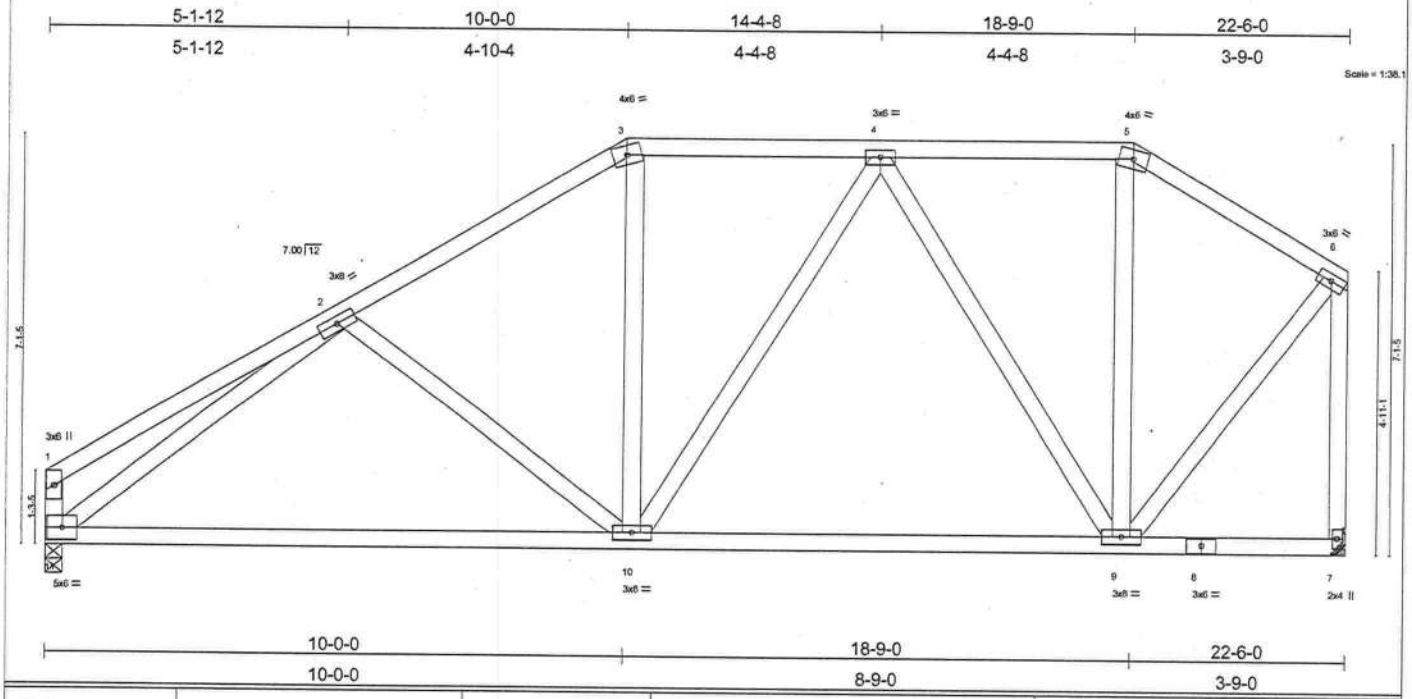

LOADING (psf)		SPACING	2-0-0	CSI		DEFL	in	(loc)	l/defl	L/d	PLATES	GRIP
TCLL	20.0	Plates Increase	1.25	TC	0.41	Vert(LL)	-0.14	10-11	>999	240	MT20	244/190
TCDL	7.0	Lumber Increase	1.25	BC	0.44	Vert(TL)	-0.24	10-11	>999	180		
BCLL	10.0	Rep Stress Incr	YES	WB	0.55	Horz(TL)	0.02	7	n/a	n/a		
BCDL	5.0	Code FBC2001/TPI2002		(Matrix)							Weight: 147 lb	

LUMBER
TOP CHORD 2 X 4 SYP No.2D
BOT CHORD 2 X 4 SYP No.2D
WEBS 2 X 4 SYP No.3 *Except*
W1 2 X 4 SYP No.2D, W7 2 X 4 SYP No.2D

BRACING
TOP CHORD Structural wood sheathing directly applied or 6-0-0 oc purlins, except end verticals.
BOT CHORD Rigid ceiling directly applied or 9-7-12 oc bracing.

REACTIONS (lb/size) 11=933/0-3-8, 7=933/Mechanical
Max Horz 11=210(load case 5)
Max Uplift11=-251(load case 5), 7=-232(load case 4)

FORCES (lb) - Maximum Compression/Maximum Tension
TOP CHORD 1-2=-478/130, 2-3=-989/397, 3-4=-800/397, 4-5=-454/253, 5-6=-567/243, 1-11=-343/147, 6-7=-904/366
BOT CHORD 10-11=-453/902, 9-10=-291/697, 8-9=-9/9, 7-8=-9/9
WEBS 2-10=-137/228, 3-10=-17/213, 4-10=-101/206, 4-9=-483/274, 5-9=-5/92, 2-11=-702/321, 6-9=-246/711

NOTES
1) Unbalanced roof live loads have been considered for this design.
2) Wind: ASCE 7-98; 110mph (3-second gust); h=20ft; TCDL=4.2psf; BCDL=3.0psf; Category II; Exp B; enclosed; MWFRS gable end zone and C-C Exterior(2) zone; Lumber DOL=1.60 plate grip DOL=1.60. This truss is designed for C-C for members and forces, and for MWFRS for reactions specified.
3) Provide adequate drainage to prevent water ponding.
4) Refer to girder(s) for truss to truss connections.
5) Provide mechanical connection (by others) of truss to bearing plate capable of withstanding 251 lb uplift at joint 11 and 232 lb uplift at joint 7.

LOAD CASE(S) Standard

SEPTEMBER 21, 2005 TRUSS DESIGN ENGINEER:
THOMAS E. MILLER PE 56877, BYRON K. ANDERSON PE 60987
STRUCTURAL ENGINEERING AND INSPECTIONS, INC. EB 9196
16105 N. FLORIDA AVE. STE B, LUTZ, FL 33549

Job	Truss	Truss Type	Qty	Ply	
L130833	T12	SPECIAL	1	1	Job Reference (optional)

Dwg.#092105629

Builders FirstSource, Lake City, Fl 32055

6.200 s Jul 13 2005 MiTek Industries, Inc. Tue Sep 20 17:51:00 2005 Page 1

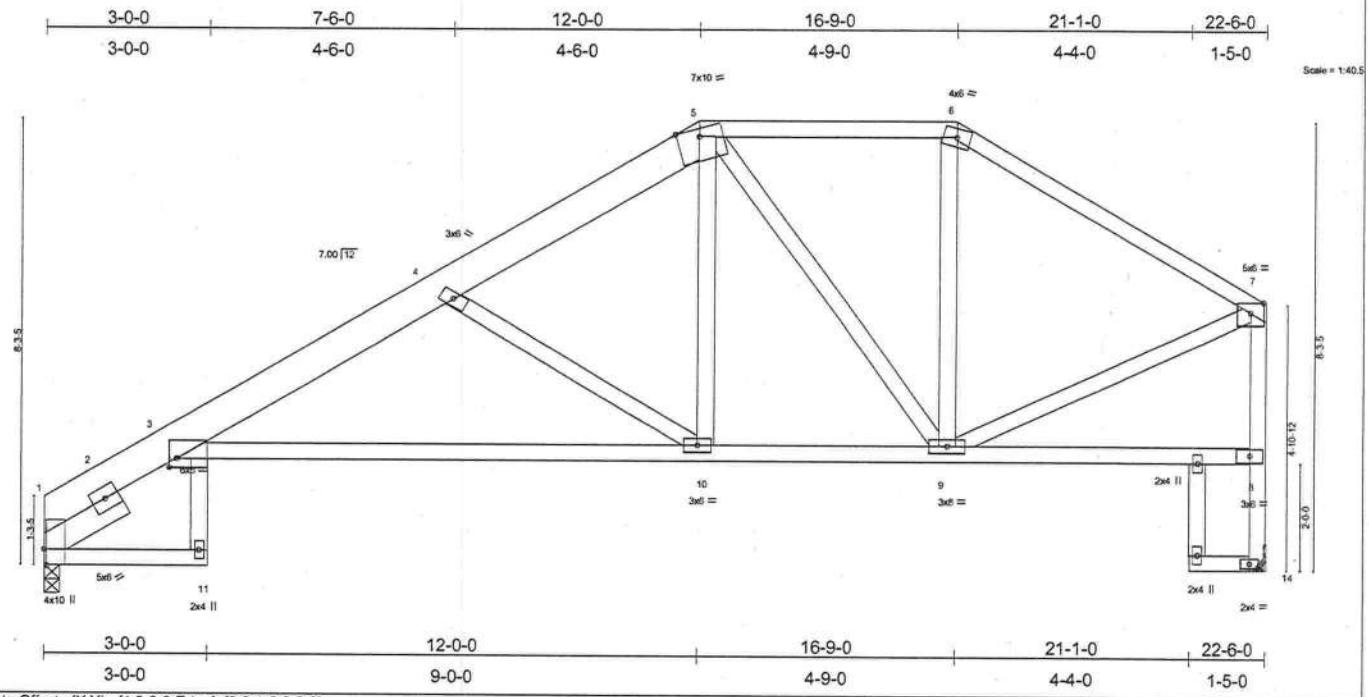

Plate Offsets (X,Y): [1:0-3-8,Edge], [3:0-1-8,0-2-0]

LOADING (psf)		SPACING	2-0-0	CSI		DEFL	in	(loc)	l/defl	L/d	PLATES	GRIP
TCLL	20.0	Plates Increase	1.25	TC	0.59	Vert(LL)	-0.35	3-10	>760	240	MT20	244/190
TCDL	7.0	Lumber Increase	1.25	BC	0.51	Vert(TL)	-0.58	3-10	>459	180		
BCLL	10.0	Rep Stress Incr	YES	WB	0.46	Horz(TL)	0.33	14	n/a	n/a		
BCDL	5.0	Code FBC2001/TPI2002		(Matrix)							Weight: 157 lb	

LUMBER

TOP CHORD 2 X 4 SYP No.2D *Except*
T1 2 X 8 SYP 2400F 2.0E
BOT CHORD 2 X 4 SYP No.2D *Except*
B3 2 X 4 SYP No.3, B3 2 X 4 SYP No.3
WEBS 2 X 4 SYP No.3 *Except*
W5 2 X 4 SYP No.2D
SLIDER Left 2 X 6 SYP No.1D 1-8-10

BRACING

TOP CHORD Structural wood sheathing directly applied or 6-0-0 oc purlins, except end verticals.
BOT CHORD Rigid ceiling directly applied or 10-0-0 oc bracing, Except:
6-11-8 oc bracing: 3-10.

REACTIONS (lb/size) 1=954/0-3-8, 14=941/Mechanical
Max Horz 1=282(load case 5)
Max Uplift1=-296(load case 5), 14=-298(load case 5)

FORCES (lb) - Maximum Compression/Maximum Tension
TOP CHORD 1-2=-662/131, 2-3=-290/108, 3-4=-1713/700, 4-5=-1191/495, 5-6=-700/380, 6-7=-880/370, 8-14=-941/358, 7-8=-842/370
BOT CHORD 1-11=0/0, 3-10=-820/1649, 9-10=-364/940, 8-9=-44/84
WEBS 4-10=-848/540, 5-10=-249/700, 5-9=-451/203, 6-9=-50/198, 7-9=-243/677

NOTES

1) Unbalanced roof live loads have been considered for this design.
2) Wind: ASCE 7-98; 110mph (3-second gust); h=20ft; TCDL=4.2psf; BCDL=3.0psf; Category II; Exp B; enclosed; MWFRS gable end zone and C-C Exterior(2) zone; Lumber DOL=1.60 plate grip DOL=1.60. This truss is designed for C-C for members and forces, and for MWFRS for reactions specified.
3) Provide adequate drainage to prevent water ponding.
4) Refer to girder(s) for truss to truss connections.
5) Provide mechanical connection (by others) of truss to bearing plate capable of withstanding 296 lb uplift at joint 1 and 298 lb uplift at joint 14.

LOAD CASE(S) Standard

SEPTEMBER 21, 2005 TRUSS DESIGN ENGINEER:
THOMAS E. MILLER PE 56877, BYRON K. ANDERSON PE 60987
STRUCTURAL ENGINEERING AND INSPECTIONS, INC. EB 9196
16105 N. FLORIDA AVE. STE B, LUTZ, FL 33549

Job	Truss	Truss Type	Qty	Ply	
L130833	T13	SPECIAL	1	1	Job Reference (optional)

Dwg.#092105630

Builders FirstSource, Lake City, Fl 32055

6.200 s Jul 13 2005 MiTek Industries, Inc. Tue Sep 20 17:51:03 2005 Page 1

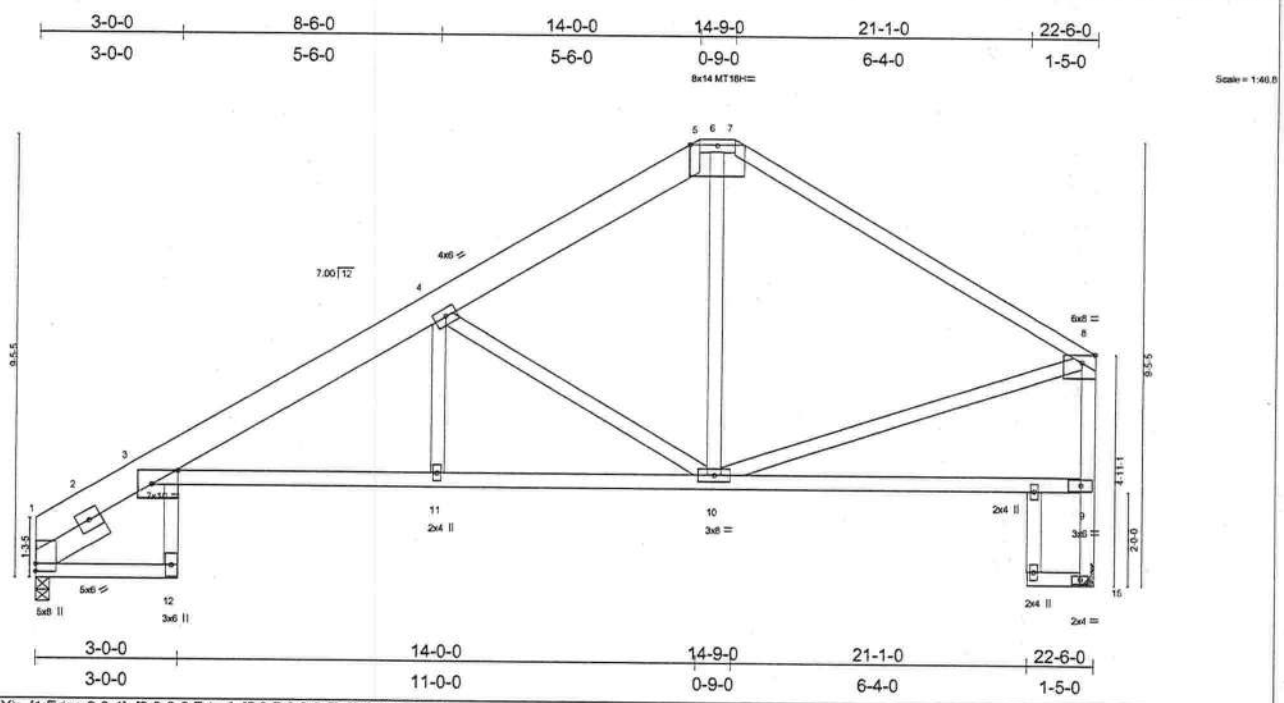

Plate Offsets (X,Y): [1:Edge,0-0-1], [3:0-6-8,Edge], [5:0-7-0,0-0-5], [8:0-3-8,Edge]

LOADING (psf)		SPACING	2-0-0	CSI		DEFL	in	(loc)	l/defl	L/d	PLATES	GRIP
TCLL	20.0	Plates Increase	1.25	TC	0.49	Vert(LL)	-0.24	3-11	>999	240	MT20	244/190
TCDL	7.0	Lumber Increase	1.25	BC	0.72	Vert(TL)	-0.39	3-11	>684	180	MT18H	244/190
BCLL	10.0	Rep Stress Incr	YES	WB	0.78	Horz(TL)	0.35	15	n/a	n/a		
BCDL	5.0	Code FBC2001/TPI2002		(Matrix)							Weight: 154 lb	

LUMBER

TOP CHORD 2 X 4 SYP No.2D *Except*
T1 2 X 8 SYP 2400F 2.0E
BOT CHORD 2 X 4 SYP No.2D *Except*
B3 2 X 4 SYP No.3, B3 2 X 4 SYP No.3
WEBS 2 X 4 SYP No.3 *Except*
W5 2 X 4 SYP No.2D
SLIDER Left 2 X 6 SYP No.1D 1-8-10

BRACING

TOP CHORD Structural wood sheathing directly applied or 6-0-0 oc purlins, except end verticals.
BOT CHORD Rigid ceiling directly applied or 7-6-2 oc bracing.

REACTIONS (lb/size) 1=954/0-3-8, 15=941/Mechanical
Max Horz 1=305(load case 5)
Max Uplift1=-270(load case 5), 15=-269(load case 5)

FORCES (lb) - Maximum Compression/Maximum Tension
TOP CHORD 1-2=-811/183, 2-3=-531/114, 3-4=-1627/599, 4-5=-937/417, 5-6=-709/412, 6-7=-709/412, 7-8=-929/382, 9-15=-941/348, 8-9=-814/366
BOT CHORD 1-12=-71/115, 3-12=-9/62, 3-11=-683/1498, 10-11=-683/1497, 9-10=-84/155
WEBS 8-10=-189/586, 6-10=-181/548, 4-11=0/195, 4-10=-954/553

NOTES

1) Unbalanced roof live loads have been considered for this design.
2) Wind: ASCE 7-98; 110mph (3-second gust); h=20ft; TCDL=4.2psf; BCDL=3.0psf; Category II; Exp B; enclosed; MWFRS gable end zone and C-C Exterior(2) zone; Lumber DOL=1.60 plate grip DOL=1.60. This truss is designed for C-C for members and forces, and for MWFRS for reactions specified.
3) Provide adequate drainage to prevent water ponding.
4) All plates are MT20 plates unless otherwise indicated.
5) The following joint(s) require plate inspection per the Tooth Count Method when this truss is chosen for quality assurance inspection: 5.
6) Refer to girder(s) for truss to truss connections.
7) Provide mechanical connection (by others) of truss to bearing plate capable of withstanding 270 lb uplift at joint 1 and 269 lb uplift at joint 15.

LOAD CASE(S) Standard

SEPTEMBER 21, 2005 TRUSS DESIGN ENGINEER:
THOMAS E. MILLER PE 56877, BYRON K. ANDERSON PE 60987
STRUCTURAL ENGINEERING AND INSPECTIONS, INC. EB 9196
16105 N. FLORIDA AVE. STE B, LUTZ, FL 33549

Job	Truss	Truss Type	Qty	Ply	Dwg.#092105631
L130833	T14	SPECIAL	4	1	Job Reference (optional)

Builders FirstSource, Lake City, Fl 32055

6.200 s Jul 13 2005 MiTek Industries, Inc. Tue Sep 20 17:51:04 2005 Page 1

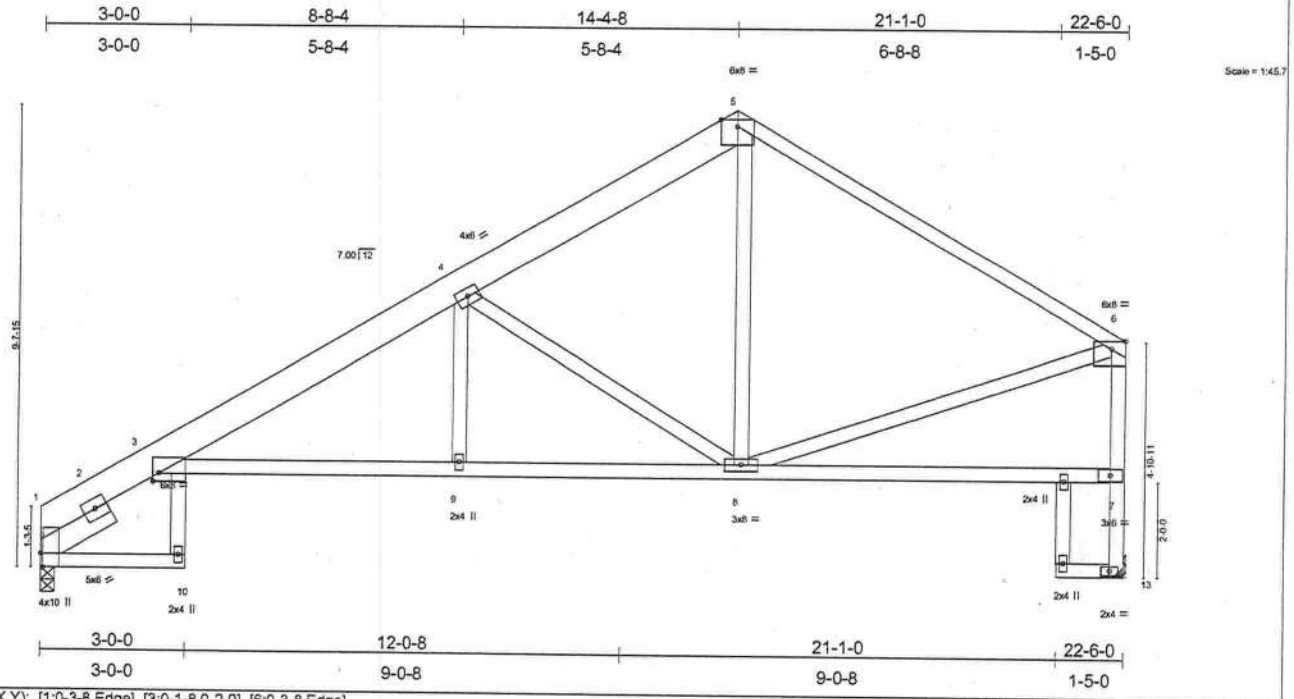

Plate Offsets (X,Y): [1:0-3-8,Edge], [3:0-1-8,0-2-0], [6:0-3-8,Edge]

LOADING (psf)		SPACING	2-0-0	CSI		DEFL	in	(loc)	l/defl	L/d	PLATES	GRIP
TCLL	20.0	Plates Increase	1.25	TC	0.55	Vert(LL)	-0.31	10	>864	240	MT20	244/190
TCDL	7.0	Lumber Increase	1.25	BC	0.53	Vert(TL)	-0.50	10	>533	180		
BCLL	10.0	Rep Stress Incr	YES	WB	0.78	Horz(TL)	0.36	13	n/a	n/a		
BCDL	5.0	Code FBC2001/TPI2002		(Matrix)							Weight: 155 lb	

LUMBER

TOP CHORD 2 X 8 SYP 2400F 2.0E *Except*
T2 2 X 4 SYP No.2D
BOT CHORD 2 X 4 SYP No.2D *Except*
B3 2 X 4 SYP No.3, B3 2 X 4 SYP No.3
WEBS 2 X 4 SYP No.3 *Except*
W5 2 X 4 SYP No.2D
SLIDER Left 2 X 6 SYP No.1D 1-8-10

BRACING

TOP CHORD Structural wood sheathing directly applied or 6-0-0 oc purlins, except end verticals.
BOT CHORD Rigid ceiling directly applied or 7-6-6 oc bracing.

REACTIONS (lb/size) 1=954/0-3-8, 13=941/Mechanical
Max Horz 1=307(load case 5)
Max Uplift1=-272(load case 5), 13=-275(load case 5)

FORCES (lb) - Maximum Compression/Maximum Tension
TOP CHORD 1-2=-662/136, 2-3=-290/133, 3-4=-1616/587, 4-5=-928/416, 5-6=-932/381, 7-13=-941/347, 6-7=-816/364
BOT CHORD 1-10=0/0, 3-9=-676/1479, 8-9=-676/1479, 7-8=-81/152
WEBS 5-8=-179/550, 6-8=-200/599, 4-9=0/228, 4-8=-945/543

NOTES

1) Unbalanced roof live loads have been considered for this design.
2) Wind: ASCE 7-98; 110mph (3-second gust); h=20ft; TCDL=4.2psf; BCDL=3.0psf; Category II; Exp B; enclosed; MWFRS gable end zone and C-C Exterior(2) zone; Lumber DOL=1.60 plate grip DOL=1.60. This truss is designed for C-C for members and forces, and for MWFRS for reactions specified.
3) Refer to girder(s) for truss to truss connections.
4) Provide mechanical connection (by others) of truss to bearing plate capable of withstanding 272 lb uplift at joint 1 and 275 lb uplift at joint 13.

LOAD CASE(S) Standard

SEPTEMBER 21, 2005 TRUSS DESIGN ENGINEER:
THOMAS E. MILLER PE 56877, BYRON K. ANDERSON PE 60987
STRUCTURAL ENGINEERING AND INSPECTIONS, INC. EB 9196
16105 N. FLORIDA AVE. STE B, LUTZ, FL 33549

Job	Truss	Truss Type	Qty	Ply	Dwg.#092105632
L130833	T15	SPECIAL	1	3	Job Reference (optional)

Builders FirstSource, Lake City, Fl 32055

6.200 s Jul 13 2005 MiTek Industries, Inc. Tue Sep 20 17:51:05 2005 Page 1

-2-0-0	3-6-14	6-0-15	11-1-8	16-2-0	20-8-4	25-0-12	29-7-0	32-10-3	36-7-0
2-0-0	3-6-14	2-6-1	5-0-8	5-0-8	4-6-4	4-4-8	4-6-4	3-3-3	3-8-13

Scale = 1:65.7

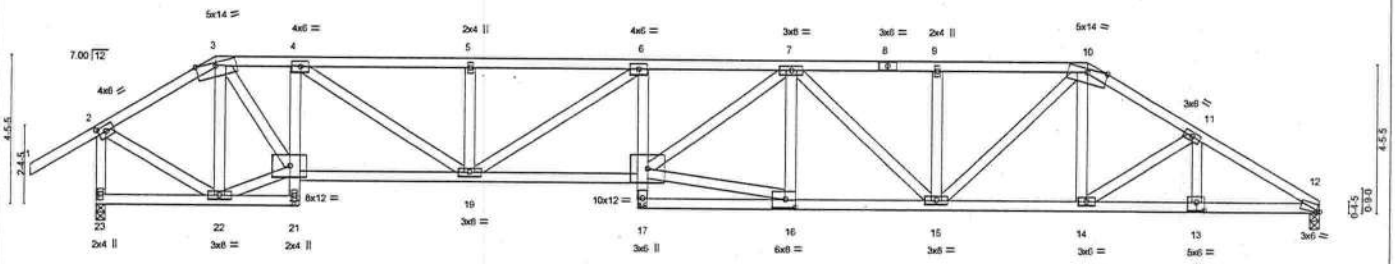

3-6-14	6-0-15	11-1-8	16-2-0	20-8-4	25-0-12	29-7-0	32-10-3	36-7-0
3-6-14	2-6-1	5-0-8	5-0-8	4-6-4	4-4-8	4-6-4	3-3-3	3-8-13

Plate Offsets (X,Y): [2:0-2-14,0-2-0], [12:0-1-2,0-0-7], [13:0-3-0,0-3-0], [16:0-3-8,0-3-0]

LOADING (psf)		SPACING	2-0-0	CSI		DEFL	in	(loc)	l/defl	L/d	PLATES	GRIP
TCLL	20.0	Plates Increase	1.25	TC	0.31	Vert(LL)	0.28	18-19	>999	240	MT20	244/190
TCDL	7.0	Lumber Increase	1.25	BC	0.56	Vert(TL)	-0.44	18-19	>998	180		
BCLL	10.0	Rep Stress Incr	NO	WB	0.72	Horz(TL)	0.14	12	n/a	n/a		
BCDL	5.0	Code FBC2001/TPI2002		(Matrix)							Weight: 682 lb	

LUMBER
TOP CHORD 2 X 4 SYP No.2D
BOT CHORD 2 X 4 SYP No.1D
WEBS 2 X 4 SYP No.3 *Except*
W1 2 X 4 SYP No.2D

BRACING
TOP CHORD Structural wood sheathing directly applied or 6-0-0 oc purlins, except end verticals.
BOT CHORD Rigid ceiling directly applied or 10-0-0 oc bracing.

REACTIONS (lb/size) 12=3160/0-3-8, 23=3733/0-3-8
Max Horz 23=168(load case 3)
Max Uplift12=-1698(load case 2), 23=-2014(load case 3)

FORCES (lb) - Maximum Compression/Maximum Tension
TOP CHORD 1-2=0/58, 2-3=-3290/1898, 3-4=-5292/3130, 4-5=-7901/4620, 5-6=-7901/4620, 6-7=-9411/5487, 7-8=-6604/3876, 8-9=-6604/3876, 9-10=-6605/3875, 10-11=-5582/3210, 11-12=-5714/3142, 2-23=-3487/1930
BOT CHORD 22-23=-175/110, 21-22=-269/314, 20-21=-1/71, 4-20=-2045/1454, 19-20=-3238/5447, 18-19=-5570/9579, 17-18=-15/210, 6-18=-86/562, 16-17=-533/909, 15-16=-4295/7464, 14-15=-2699/4837, 13-14=-2624/4817, 12-13=-2624/4817
WEBS 3-22=-2081/1254, 20-22=-1478/2607, 3-20=-2551/4337, 4-19=-1771/2954, 5-19=-608/640, 6-19=-2003/1192, 16-18=-3844/6698, 7-18=-1473/2424, 7-16=-1170/897, 7-15=-1221/753, 9-15=-507/549, 10-15=-1495/2441, 10-14=-369/776, 11-14=-252/135, 11-13=0/54, 2-22=-1793/3150

NOTES
1) 3-ply truss to be connected together with 0.131"x3" Nails as follows:
Top chords connected as follows: 2 X 4 - 1 row at 0-9-0 oc.
Bottom chords connected as follows: 2 X 4 - 1 row at 0-9-0 oc.
Webs connected as follows: 2 X 4 - 1 row at 0-9-0 oc.
2) All loads are considered equally applied to all plies, except if noted as front (F) or back (B) face in the LOAD CASE(S) section. Ply to ply connections have been provided to distribute only loads noted as (F) or (B), unless otherwise indicated.
3) Unbalanced roof live loads have been considered for this design.
4) Wind: ASCE 7-98; 110mph (3-second gust); h=20ft; TCDL=4.2psf; BCDL=3.0psf; Category II; Exp B; enclosed; MWFRS gable end zone; end vertical left exposed; Lumber DOL=1.60 plate grip DOL=1.60.
5) Provide adequate drainage to prevent water ponding.
6) Provide mechanical connection (by others) of truss to bearing plate capable of withstanding 1698 lb uplift at joint 12 and 2014 lb uplift at joint 23.
7) Girder carries tie-in span(s): 7-0-0 from 0-0-0 to 3-6-14
8) Girder carries hip end with 7-0-0 right side setback, 3-6-14 left side setback, and 7-0-0 end setback.
9) Hanger(s) or other connection device(s) shall be provided sufficient to support concentrated load(s) 539 lb down and 374 lb up at 29-7-0, and 275 lb down and 191 lb up at 3-6-14 on bottom chord. The design/selection of such connection device(s) is the responsibility of others.

LOAD CASE(S) Standard
1) Regular: Lumber Increase=1.25, Plate Increase=1.25
Uniform Loads (plf)
Vert: 1-2=-54, 2-3=-54, 3-10=-118(F=-64), 10-12=-54, 22-23=-129(F=-99), 21-22=-65(F=-35), 18-20=-65(F=-35), 14-17=-65(F=-35), 12-14=-30
Concentrated Loads (lb)
Vert: 22=-275(F) 14=-539(F)

SEPTEMBER 21, 2005 TRUSS DESIGN ENGINEER:
THOMAS E. MILLER PE 56877, BYRON K. ANDERSON PE 60987
STRUCTURAL ENGINEERING AND INSPECTIONS, INC. EB 9196
16105 N. FLORIDA AVE. STE B, LUTZ, FL 33549

Job	Truss	Truss Type	Qty	Ply	Dwg.#092105633
L130833	T16	SPECIAL	1	1	Job Reference (optional)

Builders FirstSource, Lake City, Fl 32055

6.200 s Jul 13 2005 MiTek Industries, Inc. Tue Sep 20 17:51:06 2005 Page 1

-2-0-0	5-6-14	6-0-15	11-0-3	16-2-0	21-10-8	27-7-0	31-10-3	36-7-0
2-0-0	5-6-14	0-6-1	4-11-4	5-1-13	5-8-8	5-8-8	4-3-3	4-8-13

Scale = 1:65.8

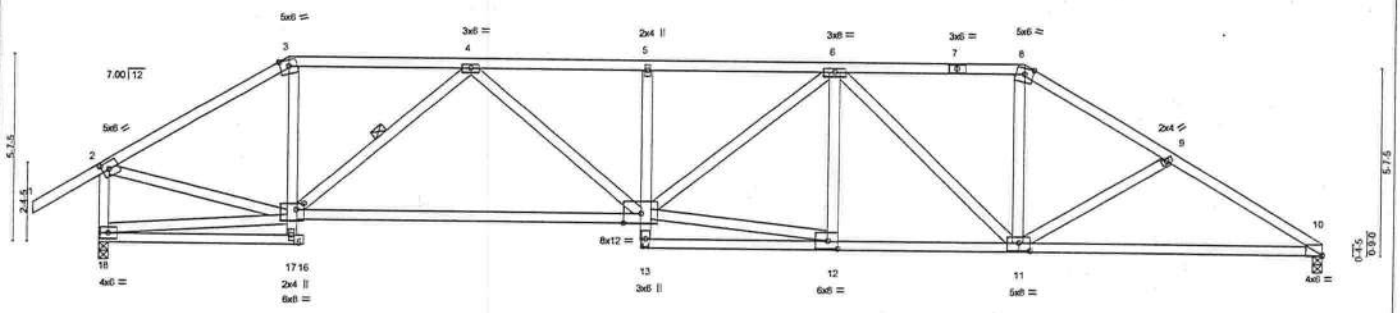

6-0-15	16-2-0	21-10-8	27-7-0	36-7-0
6-0-15	10-1-1	5-8-8	5-8-8	9-0-0

Plate Offsets (X,Y): [2:0-2-9,0-2-8], [10:0-0-0,0-0-4], [11:0-4-0,0-3-0], [12:0-3-8,0-3-0], [15:0-2-8,0-2-4]

LOADING (psf)		SPACING	2-0-0	CSI		DEFL	in	(loc)	l/defl	L/d	PLATES	GRIP
TCLL	20.0	Plates Increase	1.25	TC	0.31	Vert(LL)	-0.49	14-15	>891	240	MT20	244/190
TCDL	7.0	Lumber Increase	1.25	BC	0.92	Vert(TL)	-0.82	14-15	>529	180		
BCLL	10.0	Rep Stress Incr	YES	WB	0.83	Horz(TL)	0.14	10	n/a	n/a		
BCDL	5.0	Code FBC2001/TPI2002		(Matrix)							Weight: 221 lb	

LUMBER
TOP CHORD 2 X 4 SYP No.2D
BOT CHORD 2 X 4 SYP No.2D *Except*
B3 2 X 4 SYP No.3
WEBS 2 X 4 SYP No.3 *Except*
W1 2 X 4 SYP No.2D, W4 2 X 4 SYP No.1D

BRACING
TOP CHORD Structural wood sheathing directly applied or 3-7-5 oc purlins, except end verticals.
BOT CHORD Rigid ceiling directly applied or 2-2-0 oc bracing.
WEBS 1 Row at midpt 4-15

REACTIONS (lb/size) 10=1522/0-3-8, 18=1649/0-3-8
Max Horz 18=208(load case 4)
Max Uplift10=-503(load case 3), 18=-559(load case 4)

FORCES (lb) - Maximum Compression/Maximum Tension
TOP CHORD 1-2=0/58, 2-3=-1894/765, 3-4=-1614/721, 4-5=-3081/1240, 5-6=-3031/1237, 6-7=-1987/860, 7-8=-1988/860, 8-9=-2341/931, 9-10=-2557/1003, 2-18=-1549/717
BOT CHORD 17-18=-18/48, 16-17=0/0, 14-15=-1121/2497, 13-14=0/108, 5-14=-287/240, 12-13=-177/21, 11-12=-972/2525, 10-11=-789/2157
WEBS 4-15=-1219/656, 4-14=-255/786, 12-14=-802/2526, 6-14=-324/684, 6-12=-223/146, 6-11=-817/491, 8-11=-274/881, 9-11=-220/234, 15-17=0/84, 3-15=-227/674, 15-18=-164/219, 2-15=-605/1548

NOTES
1) Unbalanced roof live loads have been considered for this design.
2) Wind: ASCE 7-98; 110mph (3-second gust); h=20ft; TCDL=4.2psf; BCDL=3.0psf; Category II; Exp B; enclosed; MWFRS gable end zone and C-C Exterior(2) zone; end vertical left exposed; Lumber DOL=1.60 plate grip DOL=1.60. This truss is designed for C-C for members and forces, and for MWFRS for reactions specified.
3) Provide adequate drainage to prevent water ponding.
4) Provide mechanical connection (by others) of truss to bearing plate capable of withstanding 503 lb uplift at joint 10 and 559 lb uplift at joint 18.

LOAD CASE(S) Standard

SEPTEMBER 21, 2005 TRUSS DESIGN ENGINEER:
THOMAS E. MILLER PE 56877, BYRON K. ANDERSON PE 60987
STRUCTURAL ENGINEERING AND INSPECTIONS, INC. EB 9196
16105 N. FLORIDA AVE. STE B, LUTZ, FL 33549

Job	Truss	Truss Type	Qty	Ply	Dwg.#092105634
L130833	T17	SPECIAL	1	1	Job Reference (optional)

Builders FirstSource, Lake City, Fl 32055 — 6.200 s Jul 13 2005 MiTek Industries, Inc. Tue Sep 20 17:51:07 2005 Page 1

-2-0-0	6-0-15	7-6-14	11-10-7	16-2-0	20-10-8	25-7-0	30-10-3	36-7-0
2-0-0	6-0-15	1-5-15	4-3-9	4-3-9	4-8-8	4-8-8	5-3-3	5-8-13

Scale = 1:65.6

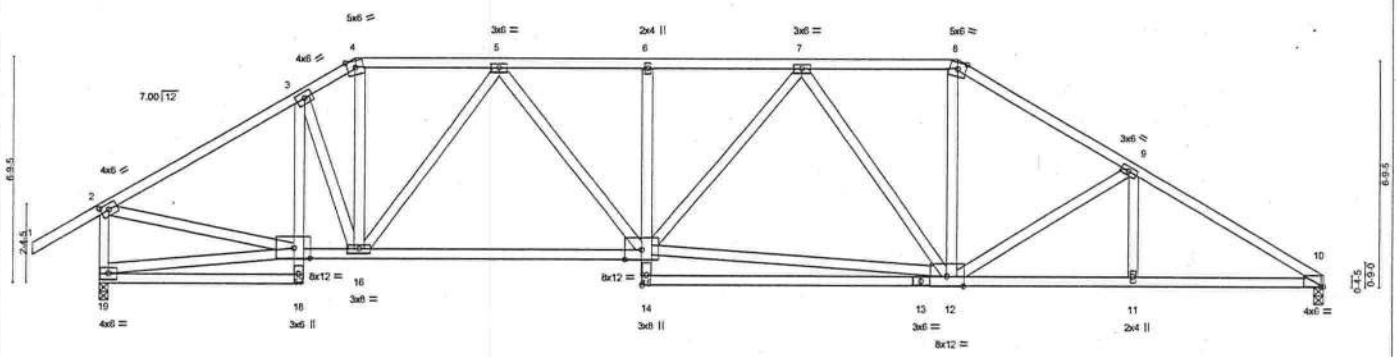

6-0-15	7-6-14	16-2-0	25-7-0	36-7-0
6-0-15	1-5-15	8-7-2	9-5-0	11-0-0

Plate Offsets (X,Y): [2:0-2-14,0-2-0], [10:0-0-13,0-0-2]

LOADING (psf)		SPACING	2-0-0	CSI		DEFL	in	(loc)	l/defl	L/d	PLATES	GRIP
TCLL	20.0	Plates Increase	1.25	TC	0.25	Vert(LL)	-0.25	15-16	>999	240	MT20	244/190
TCDL	7.0	Lumber Increase	1.25	BC	0.94	Vert(TL)	-0.41	15-16	>999	180		
BCLL	10.0	Rep Stress Incr	YES	WB	0.93	Horz(TL)	0.12	10	n/a	n/a		
BCDL	5.0	Code FBC2001/TPI2002		(Matrix)							Weight: 246 lb	

LUMBER
TOP CHORD 2 X 4 SYP No.2D
BOT CHORD 2 X 4 SYP No.2D *Except*
B2 2 X 4 SYP No.3, B4 2 X 4 SYP No.3
WEBS 2 X 4 SYP No.3 *Except*
W1 2 X 4 SYP No.2D

BRACING
TOP CHORD Structural wood sheathing directly applied or 3-9-14 oc purlins, except end verticals.
BOT CHORD Rigid ceiling directly applied or 2-2-0 oc bracing.

REACTIONS (lb/size) 10=1521/0-3-8, 19=1644/0-3-8
Max Horz 19=249(load case 4)
Max Uplift10=-442(load case 3), 19=-484(load case 4)

FORCES (lb) - Maximum Compression/Maximum Tension
TOP CHORD 1-2=0/58, 2-3=-1884/748, 3-4=-1874/814, 4-5=-1623/723, 5-6=-2405/1025, 6-7=-2377/1020, 7-8=-1840/824, 8-9=-2177/883, 9-10=-2618/972, 2-19=-1538/712
BOT CHORD 18-19=-16/177, 17-18=0/84, 3-17=-377/124, 16-17=-664/1536, 15-16=-848/2085, 14-15=0/151, 6-15=-243/204, 13-14=-102/391, 12-13=-102/391, 11-12=-751/2180, 10-11=-751/2180
WEBS 3-16=-209/304, 4-16=-308/762, 5-16=-822/470, 5-15=-225/559, 12-15=-666/1797, 7-15=-186/371, 7-12=-675/462, 8-12=-253/788, 17-19=-221/195, 2-17=-459/1515, 9-11=0/170, 9-12=-431/289

NOTES
1) Unbalanced roof live loads have been considered for this design.
2) Wind: ASCE 7-98; 110mph (3-second gust); h=20ft; TCDL=4.2psf; BCDL=3.0psf; Category II; Exp B; enclosed; MWFRS gable end zone and C-C Exterior(2) zone; end vertical left exposed; Lumber DOL=1.60 plate grip DOL=1.60. This truss is designed for C-C for members and forces, and for MWFRS for reactions specified.
3) Provide adequate drainage to prevent water ponding.
4) Provide mechanical connection (by others) of truss to bearing plate capable of withstanding 442 lb uplift at joint 10 and 484 lb uplift at joint 19.

LOAD CASE(S) Standard

SEPTEMBER 21, 2005 TRUSS DESIGN ENGINEER:
THOMAS E. MILLER PE 56877, BYRON K. ANDERSON PE 60987
STRUCTURAL ENGINEERING AND INSPECTIONS, INC. EB 9196
16105 N. FLORIDA AVE. STE B, LUTZ, FL 33549

Job	Truss	Truss Type	Qty	Ply	
L130833	T18	SPECIAL	1	1	Job Reference (optional)

Dwg.#092105635

Builders FirstSource, Lake City, Fl 32055

6.200 s Jul 13 2005 MiTek Industries, Inc. Tue Sep 20 17:51:07 2005 Page 1

-2-0-0	6-0-15	9-6-14	16-2-0	21-9-8	23-7-0	26-1-8	31-1-7	36-7-0
2-0-0	6-0-15	3-5-15	6-7-2	5-7-8	1-9-8	2-6-8	4-11-15	5-5-9

Scale = 1:65.6

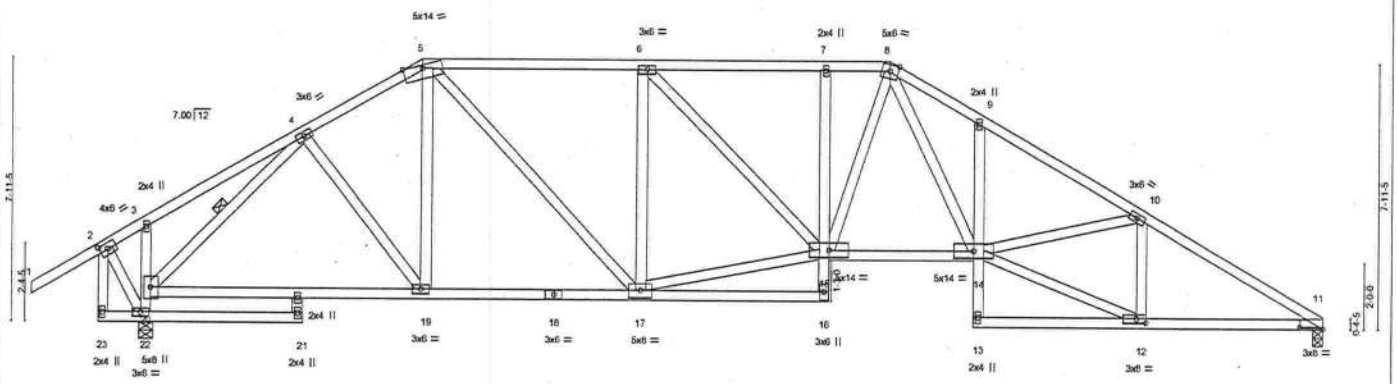

1-5-4	6-0-15	9-6-14	16-2-0	21-9-8	23-7-0	26-1-8	36-7-0
1-5-4	4-7-12	3-5-15	6-7-2	5-7-8	1-9-8	2-6-8	10-5-8

Plate Offsets (X,Y): [2:0-2-14,0-2-0], [11:0-8-1,0-0-10], [12:0-3-8,0-1-8]

LOADING (psf)		SPACING	2-0-0	CSI		DEFL	in	(loc)	l/defl	L/d	PLATES	GRIP
TCLL	20.0	Plates Increase	1.25	TC	0.25	Vert(LL)	-0.34	21	>999	240	MT20	244/190
TCDL	7.0	Lumber Increase	1.25	BC	0.74	Vert(TL)	-0.58	21	>719	180		
BCLL	10.0	Rep Stress Incr	YES	WB	0.71	Horz(TL)	0.17	11	n/a	n/a		
BCDL	5.0	Code FBC2001/TPI2002		(Matrix)							Weight: 260 lb	

LUMBER
TOP CHORD 2 X 4 SYP No.2D
BOT CHORD 2 X 4 SYP No.2D *Except*
B3 2 X 4 SYP No.3, B5 2 X 4 SYP No.3, B7 2 X 4 SYP No.3
WEBS 2 X 4 SYP No.3 *Except*
W1 2 X 4 SYP No.2D

BRACING
TOP CHORD Structural wood sheathing directly applied or 3-7-4 oc purlins, except end verticals.
BOT CHORD Rigid ceiling directly applied or 6-0-0 oc bracing.
WEBS 1 Row at midpt 4-20

REACTIONS (lb/size) 11=1470/0-3-8, 22=1834/0-4-15
Max Horz 22=-235(load case 3)
Max Uplift11=-394(load case 6), 22=-477(load case 5)

FORCES (lb) - Maximum Compression/Maximum Tension
TOP CHORD 1-2=0/58, 2-3=-92/7, 3-4=-166/127, 4-5=-1635/662, 5-6=-1852/817, 6-7=-2226/915, 7-8=-2234/913, 8-9=-3063/1214, 9-10=-3096/1117, 10-11=-2536/903, 2-23=-291/0
BOT CHORD 22-23=-74/56, 21-22=0/0, 19-20=-498/1198, 18-19=-504/1383, 17-18=-504/1383, 16-17=-25/106, 15-16=0/90, 7-15=-183/175, 14-15=-542/2114, 13-14=0/73, 9-14=-189/194, 12-13=-14/59, 11-12=-696/2113
WEBS 4-19=-241/365, 5-19=-26/244, 2-22=0/257, 20-22=-1541/609, 3-20=-238/151, 4-20=-1667/676, 10-12=-677/303, 12-14=-738/2221, 10-14=-259/512, 8-15=-312/474, 8-14=-464/1160, 6-17=-752/404, 5-17=-392/724, 15-17=-602/1790, 6-15=-141/552

NOTES
1) Unbalanced roof live loads have been considered for this design.
2) Wind: ASCE 7-98; 110mph (3-second gust); h=20ft; TCDL=4.2psf; BCDL=3.0psf; Category II; Exp B; enclosed; MWFRS gable end zone and C-C Exterior(2) zone; Lumber DOL=1.60 plate grip DOL=1.60. This truss is designed for C-C for members and forces, and for MWFRS for reactions specified.
3) This truss is not designed to support a ceiling and is not intended for use where aesthetics are a consideration.
4) Provide adequate drainage to prevent water ponding.
5) Provide mechanical connection (by others) of truss to bearing plate capable of withstanding 394 lb uplift at joint 11 and 477 lb uplift at joint 22.

LOAD CASE(S) Standard

SEPTEMBER 21, 2005 TRUSS DESIGN ENGINEER:
THOMAS E. MILLER PE 56877, BYRON K. ANDERSON PE 60987
STRUCTURAL ENGINEERING AND INSPECTIONS, INC. EB 9196
16105 N. FLORIDA AVE. STE B, LUTZ, FL 33549

Job	Truss	Truss Type	Qty	Ply	
L130833	T19	SPECIAL	1	1	Job Reference (optional)

Dwg.#092105636

Builders FirstSource, Lake City, Fl 32055

6.200 s Jul 13 2005 MiTek Industries, Inc. Tue Sep 20 17:51:08 2005 Page 1

-2-0-0	5-11-3	11-6-14	16-6-15	21-7-0	26-1-8	31-1-7	36-7-0
2-0-0	5-11-3	5-7-11	5-0-1	5-0-1	4-6-8	4-11-15	5-5-9

Scale = 1:65.6

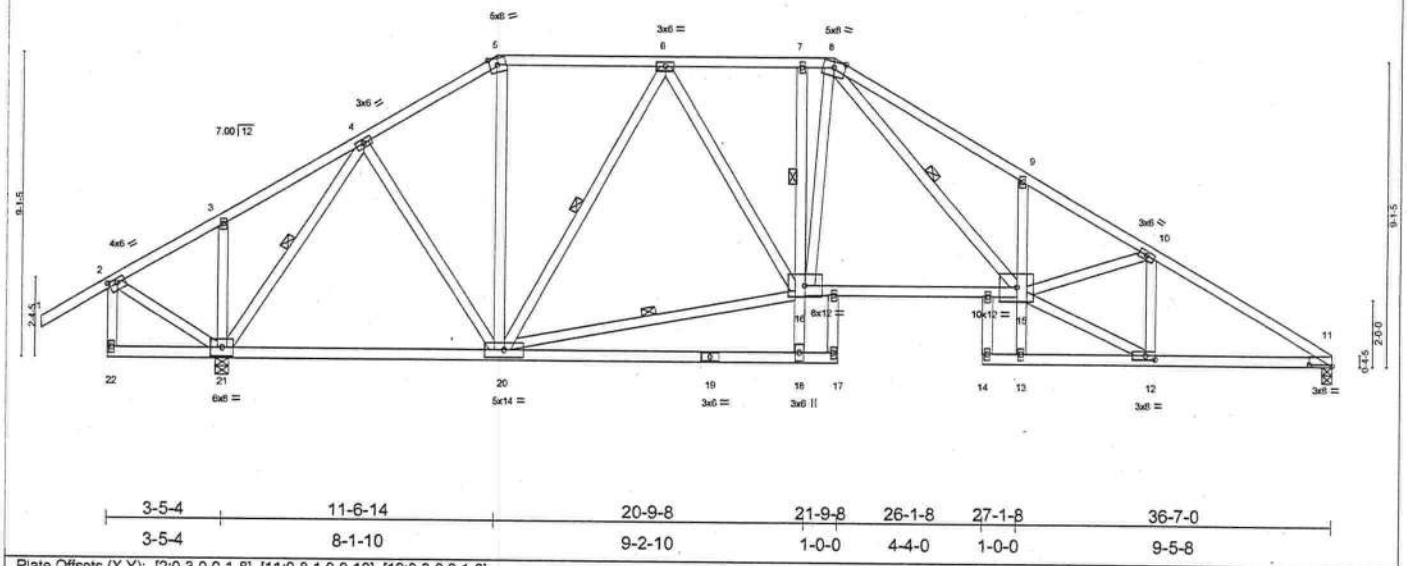

3-5-4	11-6-14	20-9-8	21-9-8	26-1-8	27-1-8	36-7-0
3-5-4	8-1-10	9-2-10	1-0-0	4-4-0	1-0-0	9-5-8

Plate Offsets (X,Y): [2:0-3-0,0-1-8], [11:0-8-1,0-0-10], [12:0-3-8,0-1-8]

LOADING (psf)		SPACING 2-0-0		CSI		DEFL	in	(loc)	l/defl	L/d	PLATES	GRIP
TCLL	20.0	Plates Increase	1.25	TC	0.48	Vert(LL)	0.35	15-16	>999	240	MT20	244/190
TCDL	7.0	Lumber Increase	1.25	BC	0.55	Vert(TL)	-0.37	15-16	>999	180		
BCLL	10.0	Rep Stress Incr	YES	WB	0.71	Horz(TL)	0.16	11	n/a	n/a		
BCDL	5.0	Code FBC2001/TPI2002		(Matrix)							Weight: 273 lb	

LUMBER
TOP CHORD 2 X 4 SYP No.2D
BOT CHORD 2 X 4 SYP No.2D *Except*
B3 2 X 4 SYP No.3, B6 2 X 4 SYP No.3
WEBS 2 X 4 SYP No.3 *Except*
W1 2 X 4 SYP No.2D

BRACING
TOP CHORD Structural wood sheathing directly applied or 3-5-9 oc purlins, except end verticals.
BOT CHORD Rigid ceiling directly applied or 4-11-15 oc bracing. Except:
1 Row at midpt 7-16
WEBS 1 Row at midpt 6-20, 16-20, 4-21, 8-15

REACTIONS (lb/size) 11=1400/0-3-8, 21=1833/0-4-15
Max Horz 21=309(load case 5)
Max Uplift11=-769(load case 3), 21=-1050(load case 5)

FORCES (lb) - Maximum Compression/Maximum Tension
TOP CHORD 1-2=0/58, 2-3=-142/258, 3-4=-34/263, 4-5=-1149/1079, 5-6=-958/988, 6-7=-1680/1562, 7-8=-1693/1573, 8-9=-3219/2794, 9-10=-3167/2617, 10-11=-2395/1948, 2-22=-5/6
BOT CHORD 21-22=-47/70, 20-21=-739/657, 19-20=-186/69, 18-19=-186/69, 17-18=0/0, 16-18=-147/164, 7-16=-95/141, 15-16=-1315/1689, 13-15=-47/90, 9-15=-252/251, 13-14=0/0, 12-13=-28/38, 11-12=-1592/1990
WEBS 5-20=-363/336, 6-20=-897/684, 6-16=-484/603, 16-20=-1121/1340, 10-12=-858/645, 12-15=-1836/2205, 10-15=-486/726, 3-21=-217/190, 2-21=-161/213, 4-20=-409/534, 4-21=-1552/1190, 8-15=-1423/1604, 8-16=-276/265

NOTES
1) Unbalanced roof live loads have been considered for this design.
2) Wind: ASCE 7-98; 110mph (3-second gust); h=20ft; TCDL=4.2psf; BCDL=3.0psf; Category II; Exp B; enclosed; MWFRS gable end zone and C-C Exterior(2) zone; cantilever left exposed ; porch left exposed; Lumber DOL=1.60 plate grip DOL=1.60. This truss is designed for C-C for members and forces, and for MWFRS for reactions specified.
3) This truss is not designed to support a ceiling and is not intended for use where aesthetics are a consideration.
4) Provide adequate drainage to prevent water ponding.
5) All plates are 2x4 MT20 unless otherwise indicated.
6) Provide mechanical connection (by others) of truss to bearing plate capable of withstanding 769 lb uplift at joint 11 and 1050 lb uplift at joint 21.

LOAD CASE(S) Standard

SEPTEMBER 21, 2005 TRUSS DESIGN ENGINEER:
THOMAS E. MILLER PE 56877, BYRON K. ANDERSON PE 60987
STRUCTURAL ENGINEERING AND INSPECTIONS, INC. EB 9196
16105 N. FLORIDA AVE. STE B, LUTZ, FL 33549

Job	Truss	Truss Type	Qty	Ply	Dwg.#092105637
L130833	T20	SPECIAL	1	1	Job Reference (optional)

Builders FirstSource, Lake City, Fl 32055

6.200 s Jul 13 2005 MiTek Industries, Inc. Tue Sep 20 17:51:09 2005 Page 1

-2-0-0	2-3-12	7-11-5	13-6-14	19-7-0	23-10-4	26-1-8	31-1-7	36-7-0
2-0-0	2-3-12	5-7-9	5-7-9	6-0-2	4-3-4	2-3-4	4-11-15	5-5-9

Scale = 1:65.6

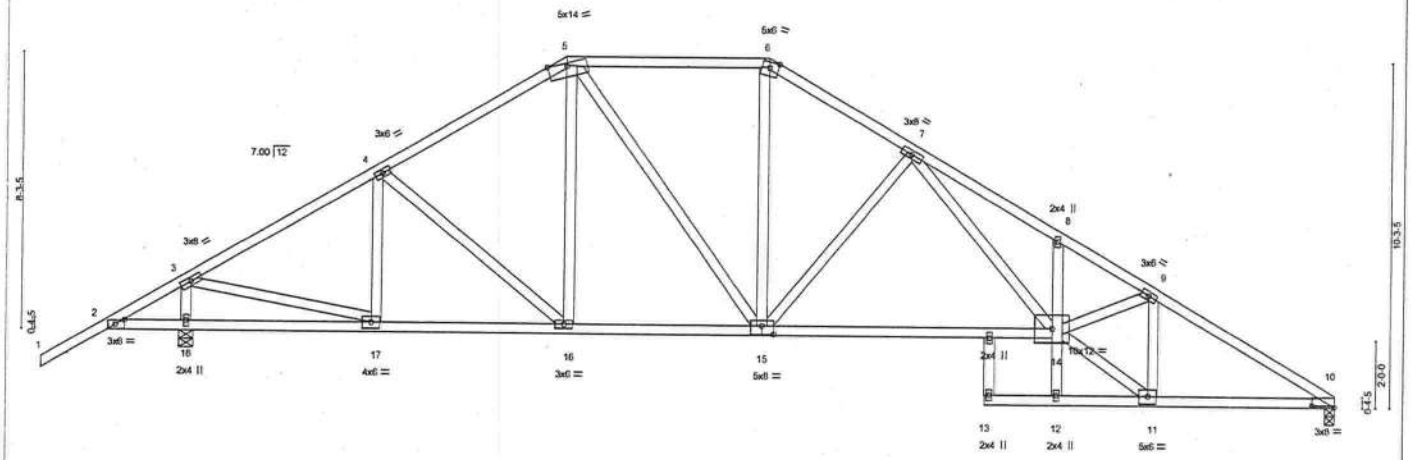

2-3-12	7-11-5	13-6-14	19-7-0	23-10-4	26-1-8	28-1-8	31-1-7	36-7-0
2-3-12	5-7-9	5-7-9	6-0-2	4-3-4	2-3-4	2-0-0	2-11-15	5-5-9

Plate Offsets (X,Y): [2:0-3-3,0-1-8], [10:0-8-1,0-0-10], [15:0-4-0,0-3-0]

LOADING (psf)		SPACING	2-0-0	CSI		DEFL	in	(loc)	l/defl	L/d	PLATES	GRIP
TCLL	20.0	Plates Increase	1.25	TC	0.27	Vert(LL)	-0.31	14-15	>999	240	MT20	244/190
TCDL	7.0	Lumber Increase	1.25	BC	0.54	Vert(TL)	-0.51	14-15	>797	180		
BCLL	10.0	Rep Stress Incr	YES	WB	0.82	Horz(TL)	0.15	10	n/a	n/a		
BCDL	5.0	Code FBC2001/TPI2002		(Matrix)							Weight: 229 lb	

LUMBER
TOP CHORD 2 X 4 SYP No.2D
BOT CHORD 2 X 4 SYP No.2D *Except*
B4 2 X 4 SYP No.3
WEBS 2 X 4 SYP No.3

BRACING
TOP CHORD Structural wood sheathing directly applied or 3-2-0 oc purlins.
BOT CHORD Rigid ceiling directly applied or 6-0-0 oc bracing.

REACTIONS (lb/size) 10=1463/0-3-8, 18=1770/0-4-15
Max Horz 18=-318(load case 3)
Max Uplift10=-425(load case 6), 18=-625(load case 5)

FORCES (lb) - Maximum Compression/Maximum Tension
TOP CHORD 1-2=0/53, 2-3=-435/356, 3-4=-1699/532, 4-5=-1647/643, 5-6=-1570/680, 6-7=-1860/730, 7-8=-3786/1281, 8-9=-3743/1179, 9-10=-2515/823
BOT CHORD 2-18=-262/462, 17-18=-262/475, 16-17=-361/1401, 15-16=-289/1361, 14-15=-490/2102, 12-14=0/108, 8-14=-165/155, 12-13=0/0, 11-12=-42/0, 10-11=-625/2092
WEBS 3-18=-1633/813, 3-17=-728/1708, 4-17=-240/218, 4-16=-180/142, 5-16=-59/215, 5-15=-197/444, 6-15=-177/633, 7-15=-865/408, 11-14=-712/2569, 9-14=-217/1182, 9-11=-1335/422, 7-14=-546/1806

NOTES
1) Unbalanced roof live loads have been considered for this design.
2) Wind: ASCE 7-98; 110mph (3-second gust); h=20ft; TCDL=4.2psf; BCDL=3.0psf; Category II; Exp B; enclosed; MWFRS gable end zone and C-C Exterior(2) zone; cantilever left exposed ; Lumber DOL=1.60 plate grip DOL=1.60. This truss is designed for C-C for members and forces, and for MWFRS for reactions specified.
3) This truss is not designed to support a ceiling and is not intended for use where aesthetics are a consideration.
4) Provide adequate drainage to prevent water ponding.
5) Provide mechanical connection (by others) of truss to bearing plate capable of withstanding 425 lb uplift at joint 10 and 625 lb uplift at joint 18.

LOAD CASE(S) Standard

SEPTEMBER 21, 2005 TRUSS DESIGN ENGINEER:
THOMAS E. MILLER PE 56877, BYRON K. ANDERSON PE 60987
STRUCTURAL ENGINEERING AND INSPECTIONS, INC. EB 9196
16105 N. FLORIDA AVE. STE B, LUTZ, FL 33549

Job	Truss	Truss Type	Qty	Ply	
L130833	T21	SPECIAL	1	1	Job Reference (optional)

Dwg.#092105638

Builders FirstSource, Lake City, Fl 32055

6.200 s Jul 13 2005 MiTek Industries, Inc. Tue Sep 20 17:51:10 2005 Page 1

-2-0-0	8-0-3	15-6-14	17-7-0	22-10-4	26-1-8	31-1-7	36-7-0
2-0-0	8-0-3	7-6-10	2-0-2	5-3-4	3-3-4	4-11-15	5-5-9

Scale = 1:65.6

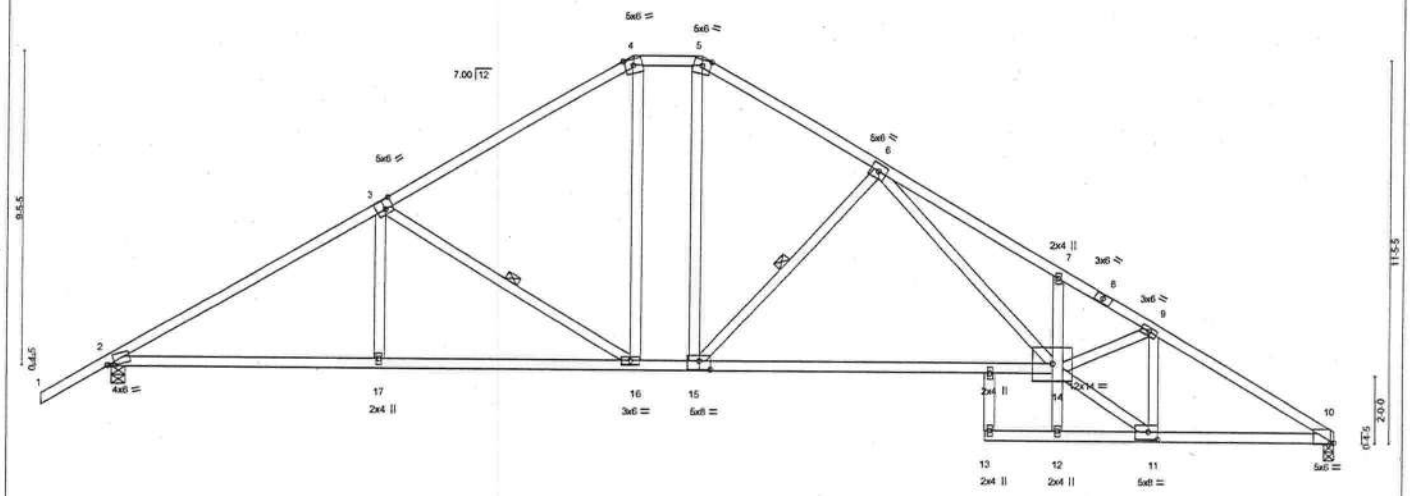

0-3-12	8-0-3	15-6-14	17-7-0	26-1-8	28-1-8	36-7-0
0-3-12	7-8-8	7-6-10	2-0-2	8-6-8	2-0-0	8-5-8

Plate Offsets (X,Y): [2:0-2-6,0-0-11], [3:0-3-0,0-3-4], [10:0-1-3,Edge], [11:0-3-8,0-2-8], [15:0-4-0,0-3-0]

LOADING (psf)		SPACING	2-0-0	CSI		DEFL	in	(loc)	l/defl	L/d	PLATES	GRIP
TCLL	20.0	Plates Increase	1.25	TC	0.64	Vert(LL)	-0.60	14-15	>726	240	MT20	244/190
TCDL	7.0	Lumber Increase	1.25	BC	0.74	Vert(TL)	-0.96	14-15	>452	180		
BCLL	10.0	Rep Stress Incr	YES	WB	0.91	Horz(TL)	0.22	10	n/a	n/a		
BCDL	5.0	Code FBC2001/TPI2002		(Matrix)							Weight: 216 lb	

LUMBER
TOP CHORD 2 X 4 SYP No.2D
BOT CHORD 2 X 4 SYP No.2D *Except*
B4 2 X 4 SYP No.3
WEBS 2 X 4 SYP No.3

BRACING
TOP CHORD Structural wood sheathing directly applied or 2-10-11 oc purlins.
BOT CHORD Rigid ceiling directly applied or 6-0-0 oc bracing.
WEBS 1 Row at midpt 3-16, 6-15

REACTIONS (lb/size) 2=1661/0-4-15, 10=1566/0-3-8
Max Horz 2=-359(load case 3)
Max Uplift2=-556(load case 5), 10=-460(load case 6)

FORCES (lb) - Maximum Compression/Maximum Tension
TOP CHORD 1-2=0/54, 2-3=-2520/833, 3-4=-1883/733, 4-5=-1545/711, 5-6=-1868/758, 6-7=-4199/1419, 7-8=-4037/1296, 8-9=-4103/1285, 9-10=-2713/894
BOT CHORD 2-17=-552/2071, 16-17=-553/2067, 15-16=-226/1545, 14-15=-525/2184, 12-14=0/103, 7-14=-191/186, 12-13=0/0, 11-12=-73/0, 10-11=-685/2261
WEBS 3-17=0/274, 3-16=-671/398, 4-16=-155/487, 5-15=-302/901, 6-15=-980/484, 6-14=-622/2089, 9-11=-1477/458, 11-14=-770/2824, 9-14=-264/1335

NOTES
1) Unbalanced roof live loads have been considered for this design.
2) Wind: ASCE 7-98; 110mph (3-second gust); h=20ft; TCDL=4.2psf; BCDL=3.0psf; Category II; Exp B; enclosed; MWFRS gable end zone and C-C Exterior(2) zone; Lumber DOL=1.60 plate grip DOL=1.60. This truss is designed for C-C for members and forces, and for MWFRS for reactions specified.
3) Provide adequate drainage to prevent water ponding.
4) Provide mechanical connection (by others) of truss to bearing plate capable of withstanding 556 lb uplift at joint 2 and 460 lb uplift at joint 10.

LOAD CASE(S) Standard

SEPTEMBER 21, 2005 TRUSS DESIGN ENGINEER:
THOMAS E. MILLER PE 56877, BYRON K. ANDERSON PE 60987
STRUCTURAL ENGINEERING AND INSPECTIONS, INC. EB 9196
16105 N. FLORIDA AVE. STE B, LUTZ, FL 33549

Job	Truss	Truss Type	Qty	Ply	
L130833	T22	SPECIAL	1	1	Job Reference (optional)

Dwg.#092105639

Builders FirstSource, Lake City, Fl 32055

6.200 s Jul 13 2005 MiTek Industries, Inc. Tue Sep 20 17:51:11 2005 Page 1

-1-10-0	5-10-0	11-2-8	16-6-15	22-5-1	26-1-8	31-1-7	36-7-0
1-10-0	5-10-0	5-4-7	5-4-7	5-10-3	3-8-7	4-11-15	5-5-9

Scale: 3/16"=1'

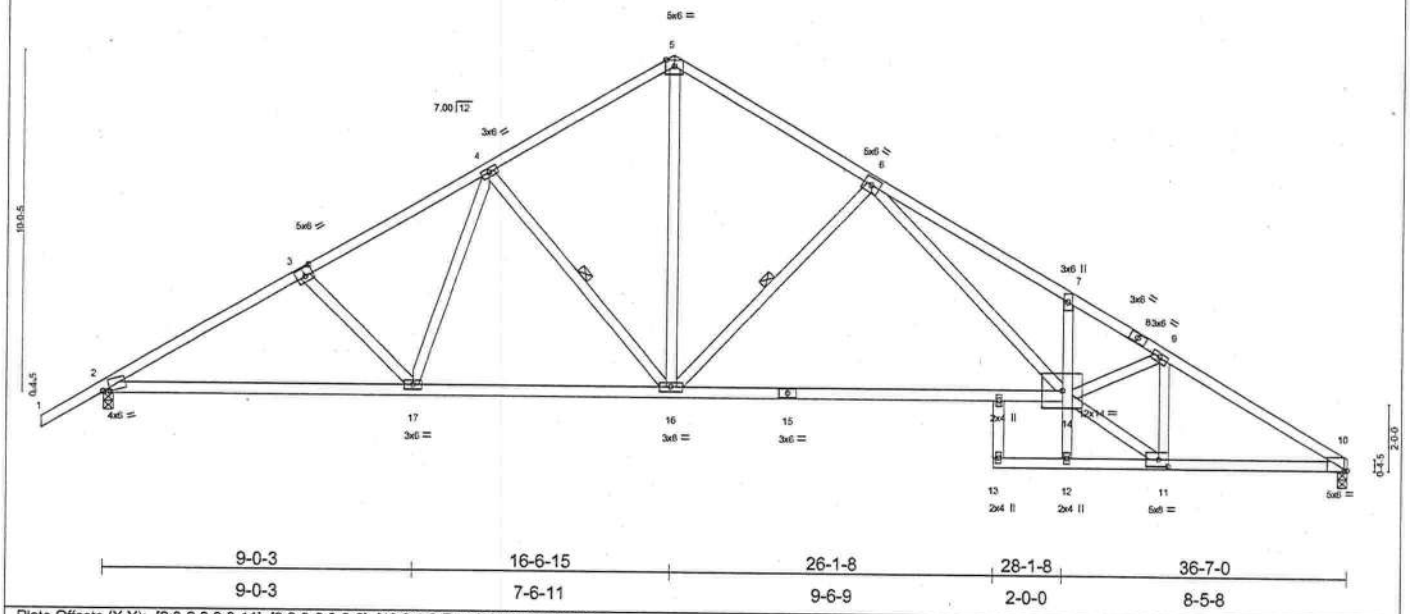

9-0-3	16-6-15	26-1-8	28-1-8	36-7-0
9-0-3	7-6-11	9-6-9	2-0-0	8-5-8

Plate Offsets (X,Y): [2:0-2-6,0-0-11], [3:0-3-0,0-3-0], [10:0-1-3,Edge], [11:0-3-8,0-2-8]

LOADING (psf)		SPACING	2-0-0	CSI		DEFL	in	(loc)	l/defl	L/d	PLATES	GRIP
TCLL	20.0	Plates Increase	1.25	TC	0.40	Vert(LL)	-0.57	14-16	>761	240	MT20	244/190
TCDL	7.0	Lumber Increase	1.25	BC	0.75	Vert(TL)	-0.96	14-16	>454	180		
BCLL	10.0	Rep Stress Incr	YES	WB	0.91	Horz(TL)	0.22	10	n/a	n/a		
BCDL	5.0	Code FBC2001/TPI2002		(Matrix)							Weight: 214 lb	

LUMBER
TOP CHORD 2 X 4 SYP No.2D
BOT CHORD 2 X 4 SYP No.2D *Except*
B4 2 X 4 SYP No.3
WEBS 2 X 4 SYP No.3

BRACING
TOP CHORD Structural wood sheathing directly applied or 2-11-0 oc purlins.
BOT CHORD Rigid ceiling directly applied or 6-0-0 oc bracing.
WEBS 1 Row at midpt 4-16, 6-16

REACTIONS (lb/size) 2=1650/0-3-8, 10=1569/0-3-8
Max Horz 2=-381(load case 3)
Max Uplift2=-552(load case 5), 10=-468(load case 6)

FORCES (lb) - Maximum Compression/Maximum Tension
TOP CHORD 1-2=0/49, 2-3=-2540/872, 3-4=-2341/845, 4-5=-1779/732, 5-6=-1791/729, 6-7=-4247/1426, 7-8=-4057/1290, 8-9=-4120/1279, 9-10=-2719/891
BOT CHORD 2-17=-642/2131, 16-17=-433/1815, 15-16=-499/2122, 14-15=-499/2122, 12-14=0/102, 7-14=-228/208, 12-13=0/0, 11-12=-89/0, 10-11=-682/2266
WEBS 3-17=-261/242, 4-17=-133/446, 4-16=-553/349, 5-16=-528/1415, 6-16=-949/485, 6-14=-648/2184, 9-11=-1483/453, 11-14=-760/2837, 9-14=-264/1349

NOTES
1) Unbalanced roof live loads have been considered for this design.
2) Wind: ASCE 7-98; 110mph (3-second gust); h=20ft; TCDL=4.2psf; BCDL=3.0psf; Category II; Exp B; enclosed; MWFRS gable end zone and C-C Exterior(2) zone; Lumber DOL=1.60 plate grip DOL=1.60. This truss is designed for C-C for members and forces, and for MWFRS for reactions specified.
3) Provide mechanical connection (by others) of truss to bearing plate capable of withstanding 552 lb uplift at joint 2 and 468 lb uplift at joint 10.

LOAD CASE(S) Standard

SEPTEMBER 21, 2005 TRUSS DESIGN ENGINEER:
THOMAS E. MILLER PE 56877, BYRON K. ANDERSON PE 60987
STRUCTURAL ENGINEERING AND INSPECTIONS, INC. EB 9196
16105 N. FLORIDA AVE. STE B, LUTZ, FL 33549

Job	Truss	Truss Type	Qty	Ply	
L130833	T23	SPECIAL	1	1	Job Reference (optional)

Dwg.#092105640

Builders FirstSource, Lake City, Fl 32055

6.200 s Jul 13 2005 MiTek Industries, Inc. Tue Sep 20 17:51:12 2005 Page 1

6-2-0	11-10-7	17-6-14	18-7-0	26-1-8	31-2-8	36-7-0
6-2-0	5-8-7	5-8-7	1-0-2	7-6-8	5-1-0	5-4-8

Scale: 3/16"=1'

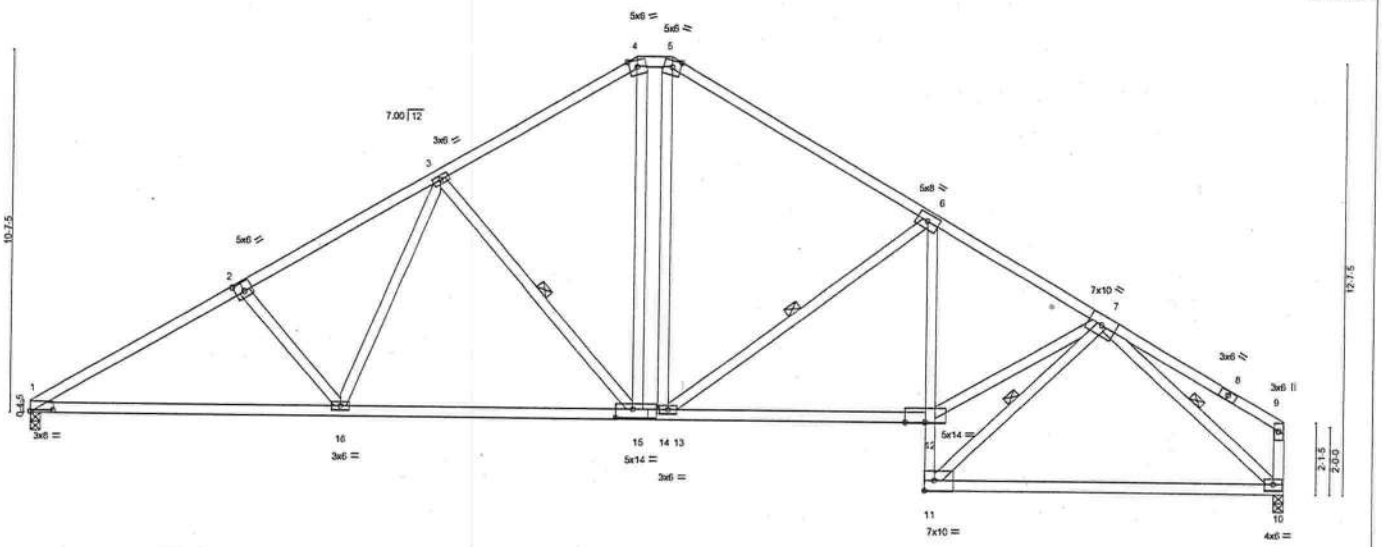

9-0-3	17-6-14	18-7-0	26-1-8	36-7-0
9-0-3	8-6-10	1-0-2	7-6-8	10-5-8

Plate Offsets (X,Y): [1:0-8-1,0-0-10], [2:0-3-0,0-3-0], [14:0-6-0,0-3-0]

LOADING (psf)		SPACING	2-0-0	CSI		DEFL	in	(loc)	l/defl	L/d	PLATES	GRIP
TCLL	20.0	Plates Increase	1.25	TC	0.42	Vert(LL)	-0.25	12-13	>999	240	MT20	244/190
TCDL	7.0	Lumber Increase	1.25	BC	0.63	Vert(TL)	-0.41	12-13	>999	180		
BCLL	10.0	Rep Stress Incr	YES	WB	0.65	Horz(TL)	0.19	10	n/a	n/a		
BCDL	5.0	Code FBC2001/TPI2002		(Matrix)							Weight: 234 lb	

LUMBER
TOP CHORD 2 X 4 SYP No.2D
BOT CHORD 2 X 4 SYP No.2D
WEBS 2 X 4 SYP No.3 *Except*
W9 2 X 4 SYP No.2D

BRACING
TOP CHORD Structural wood sheathing directly applied or 3-7-1 oc purlins, except end verticals.
BOT CHORD Rigid ceiling directly applied or 7-4-1 oc bracing.
WEBS 1 Row at midpt 3-15, 6-13, 7-11, 7-10

REACTIONS (lb/size) 1=1524/0-3-8, 10=1524/0-3-8
Max Horz 1=-362(load case 3)
Max Uplift1=-449(load case 5), 10=-453(load case 6)

FORCES (lb) - Maximum Compression/Maximum Tension
TOP CHORD 1-2=-2537/914, 2-3=-2347/901, 3-4=-1657/740, 4-5=-1374/706, 5-6=-1692/720, 6-7=-2297/870, 7-8=-245/126, 8-9=-322/111, 9-10=-278/155
BOT CHORD 1-16=-751/2130, 15-16=-507/1748, 14-15=-259/1374, 13-14=-259/1374, 12-13=-573/1977, 11-12=-406/1304, 6-12=-98/427, 10-11=-466/1364
WEBS 2-16=-280/275, 3-16=-186/561, 3-15=-622/390, 4-15=-310/664, 5-13=-165/531, 6-13=-780/447, 7-12=-621/2024, 7-11=-1657/628, 7-10=-1590/605

NOTES
1) Unbalanced roof live loads have been considered for this design.
2) Wind: ASCE 7-98; 110mph (3-second gust); h=20ft; TCDL=4.2psf; BCDL=3.0psf; Category II; Exp B; enclosed; MWFRS gable end zone and C-C Exterior(2) zone; Lumber DOL=1.60 plate grip DOL=1.60. This truss is designed for C-C for members and forces, and for MWFRS for reactions specified.
3) Provide adequate drainage to prevent water ponding.
4) Provide mechanical connection (by others) of truss to bearing plate capable of withstanding 449 lb uplift at joint 1 and 453 lb uplift at joint 10.

LOAD CASE(S) Standard

SEPTEMBER 21, 2005 TRUSS DESIGN ENGINEER:
THOMAS E. MILLER PE 56877, BYRON K. ANDERSON PE 60987
STRUCTURAL ENGINEERING AND INSPECTIONS, INC. EB 9196
16105 N. FLORIDA AVE. STE B, LUTZ, FL 33549

Job	Truss	Truss Type	Qty	Ply	Dwg.#092105641
L130833	T24	COMMON	1	1	Job Reference (optional)

Builders FirstSource, Lake City, Fl 32055 — 6.200 s Jul 13 2005 MiTek Industries, Inc. Tue Sep 20 17:51:12 2005 Page 1

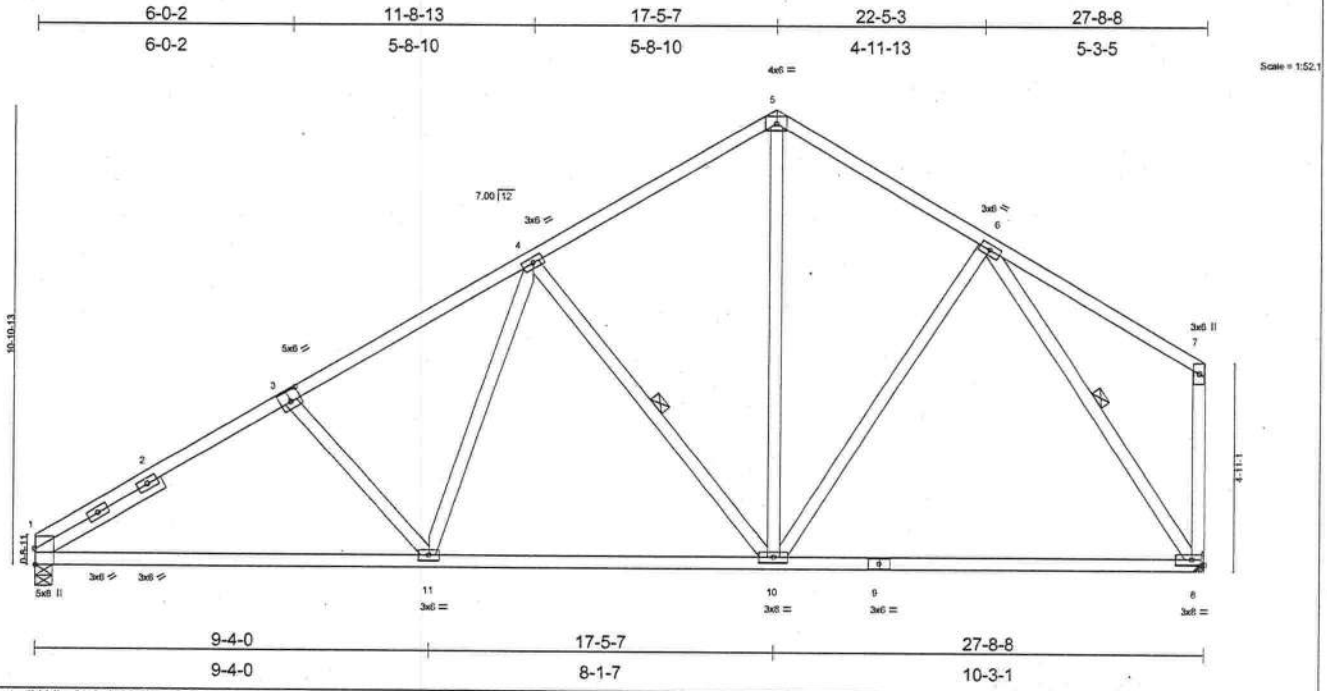

Plate Offsets (X,Y): [1:0-4-10,Edge], [3:0-3-0,0-3-0]

LOADING (psf)		SPACING 2-0-0		CSI		DEFL	in	(loc)	l/defl	L/d	PLATES	GRIP
TCLL	20.0	Plates Increase	1.25	TC	0.40	Vert(LL)	-0.19	8-10	>999	240	MT20	244/190
TCDL	7.0	Lumber Increase	1.25	BC	0.55	Vert(TL)	-0.33	8-10	>994	180		
BCLL	10.0	Rep Stress Incr	YES	WB	0.51	Horz(TL)	0.04	8	n/a	n/a		
BCDL	5.0	Code FBC2001/TPI2002		(Matrix)							Weight: 174 lb	

LUMBER
TOP CHORD 2 X 4 SYP No.2D
BOT CHORD 2 X 4 SYP No.2D
WEBS 2 X 4 SYP No.3 *Except*
W7 2 X 4 SYP No.2D
SLIDER Left 2 X 4 SYP No.2D 3-5-7

BRACING
TOP CHORD Structural wood sheathing directly applied or 5-1-8 oc purlins, except end verticals.
BOT CHORD Rigid ceiling directly applied or 7-10-5 oc bracing.
WEBS 1 Row at midpt 4-10, 6-8

REACTIONS (lb/size) 1=1158/0-4-15, 8=1158/Mechanical
Max Horz 1=349(load case 4)
Max Uplift1=-349(load case 5), 8=-324(load case 5)

FORCES (lb) - Maximum Compression/Maximum Tension
TOP CHORD 1-2=-1718/584, 2-3=-1567/602, 3-4=-1506/581, 4-5=-929/452, 5-6=-915/458, 6-7=-153/88, 7-8=-182/123
BOT CHORD 1-11=-674/1391, 10-11=-453/1094, 9-10=-223/616, 8-9=-223/616
WEBS 3-11=-241/260, 4-11=-158/456, 4-10=-594/386, 5-10=-259/561, 6-10=-118/286, 6-8=-990/393

NOTES
1) Unbalanced roof live loads have been considered for this design.
2) Wind: ASCE 7-98; 110mph (3-second gust); h=20ft; TCDL=4.2psf; BCDL=3.0psf; Category II; Exp B; enclosed; MWFRS gable end zone and C-C Exterior(2) zone; Lumber DOL=1.60 plate grip DOL=1.60. This truss is designed for C-C for members and forces, and for MWFRS for reactions specified.
3) Refer to girder(s) for truss to truss connections.
4) Provide mechanical connection (by others) of truss to bearing plate capable of withstanding 349 lb uplift at joint 1 and 324 lb uplift at joint 8.

LOAD CASE(S) Standard

SEPTEMBER 21, 2005 TRUSS DESIGN ENGINEER:
THOMAS E. MILLER PE 56877, BYRON K. ANDERSON PE 60987
STRUCTURAL ENGINEERING AND INSPECTIONS, INC. EB 9196
16105 N. FLORIDA AVE. STE B, LUTZ, FL 33549

Job	Truss	Truss Type	Qty	Ply	Dwg.#092105642
L130833	T25	HIP	1	1	Job Reference (optional)

Builders FirstSource, Lake City, Fl 32055

6.200 s Jul 13 2005 MiTek Industries, Inc. Tue Sep 20 17:51:13 2005 Page 1

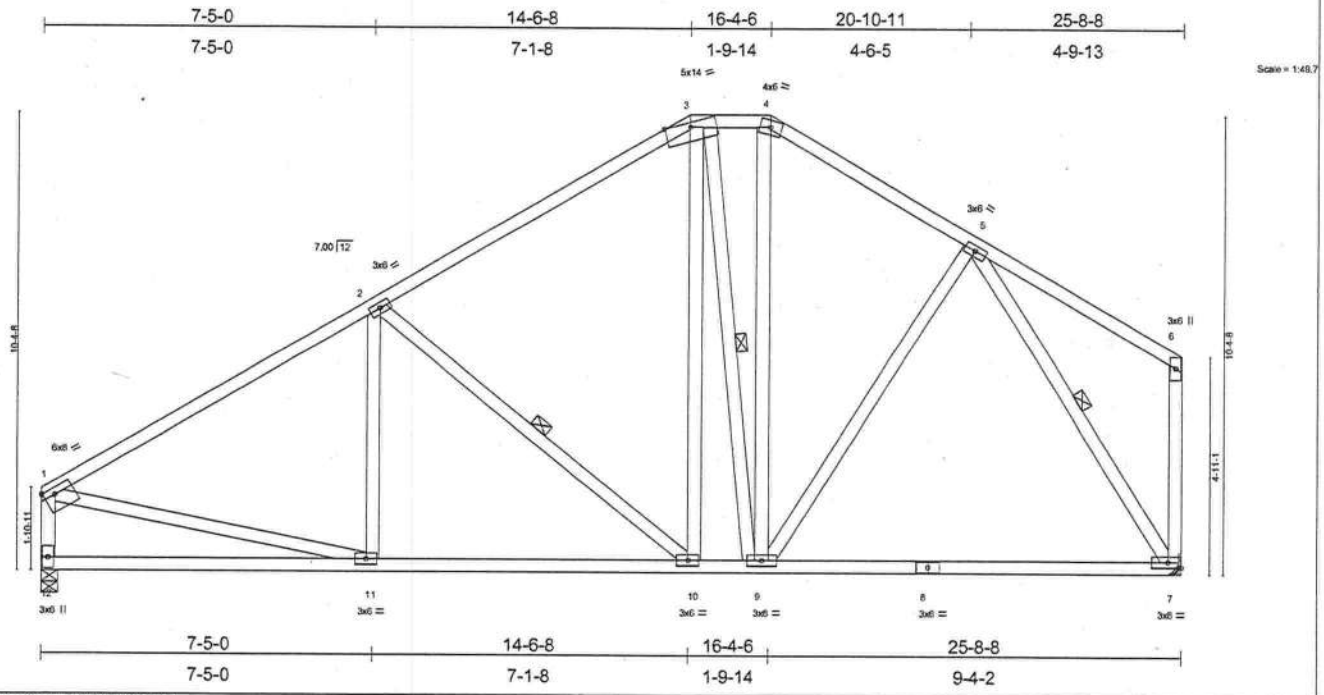

Plate Offsets (X,Y): [1:Edge,0-1-12]

LOADING (psf)		SPACING	2-0-0	CSI		DEFL	in	(loc)	l/defl	L/d	PLATES	GRIP
TCLL	20.0	Plates Increase	1.25	TC	0.37	Vert(LL)	-0.13	7-9	>999	240	MT20	244/190
TCDL	7.0	Lumber Increase	1.25	BC	0.46	Vert(TL)	-0.23	7-9	>999	180		
BCLL	10.0	Rep Stress Incr	YES	WB	0.34	Horz(TL)	0.02	7	n/a	n/a		
BCDL	5.0	Code FBC2001/TPI2002		(Matrix)							Weight: 192 lb	

LUMBER
TOP CHORD 2 X 4 SYP No.2D
BOT CHORD 2 X 4 SYP No.2D
WEBS 2 X 4 SYP No.3 *Except*
W1 2 X 4 SYP No.2D, W9 2 X 4 SYP No.2D

BRACING
TOP CHORD Structural wood sheathing directly applied or 5-6-6 oc purlins, except end verticals.
BOT CHORD Rigid ceiling directly applied or 9-8-9 oc bracing.
WEBS 1 Row at midpt 2-10, 3-9, 5-7

REACTIONS (lb/size) 12=1067/0-4-3, 7=1067/Mechanical
Max Horz 12=280(load case 4)
Max Uplift12=-307(load case 5), 7=-301(load case 6)

FORCES (lb) - Maximum Compression/Maximum Tension
TOP CHORD 1-2=-1259/438, 2-3=-892/419, 3-4=-653/409, 4-5=-819/419, 5-6=-128/78, 1-12=-959/373, 6-7=-158/110
BOT CHORD 11-12=-357/241, 10-11=-450/1004, 9-10=-211/685, 8-9=-200/539, 7-8=-200/539
WEBS 2-11=0/108, 2-10=-441/310, 3-10=-181/312, 3-9=-275/252, 4-9=-189/330, 5-9=-114/237, 1-11=-175/815, 5-7=-912/370

NOTES
1) Unbalanced roof live loads have been considered for this design.
2) Wind: ASCE 7-98; 110mph (3-second gust); h=20ft; TCDL=4.2psf; BCDL=3.0psf; Category II; Exp B; enclosed; MWFRS gable end zone and C-C Exterior(2) zone; Lumber DOL=1.60 plate grip DOL=1.60. This truss is designed for C-C for members and forces, and for MWFRS for reactions specified.
3) Provide adequate drainage to prevent water ponding.
4) Refer to girder(s) for truss to truss connections.
5) Provide mechanical connection (by others) of truss to bearing plate capable of withstanding 307 lb uplift at joint 12 and 301 lb uplift at joint 7.

LOAD CASE(S) Standard

SEPTEMBER 21, 2005 TRUSS DESIGN ENGINEER:
THOMAS E. MILLER PE 56877, BYRON K. ANDERSON PE 60987
STRUCTURAL ENGINEERING AND INSPECTIONS, INC. EB 9196
16105 N. FLORIDA AVE. STE B, LUTZ, FL 33549

Job	Truss	Truss Type	Qty	Ply	
L130833	T26	SPECIAL	1	1	Job Reference (optional)

Dwg.#092105643

Builders FirstSource, Lake City, Fl 32055

6.200 s Jul 13 2005 MiTek Industries, Inc. Tue Sep 20 17:51:14 2005 Page 1

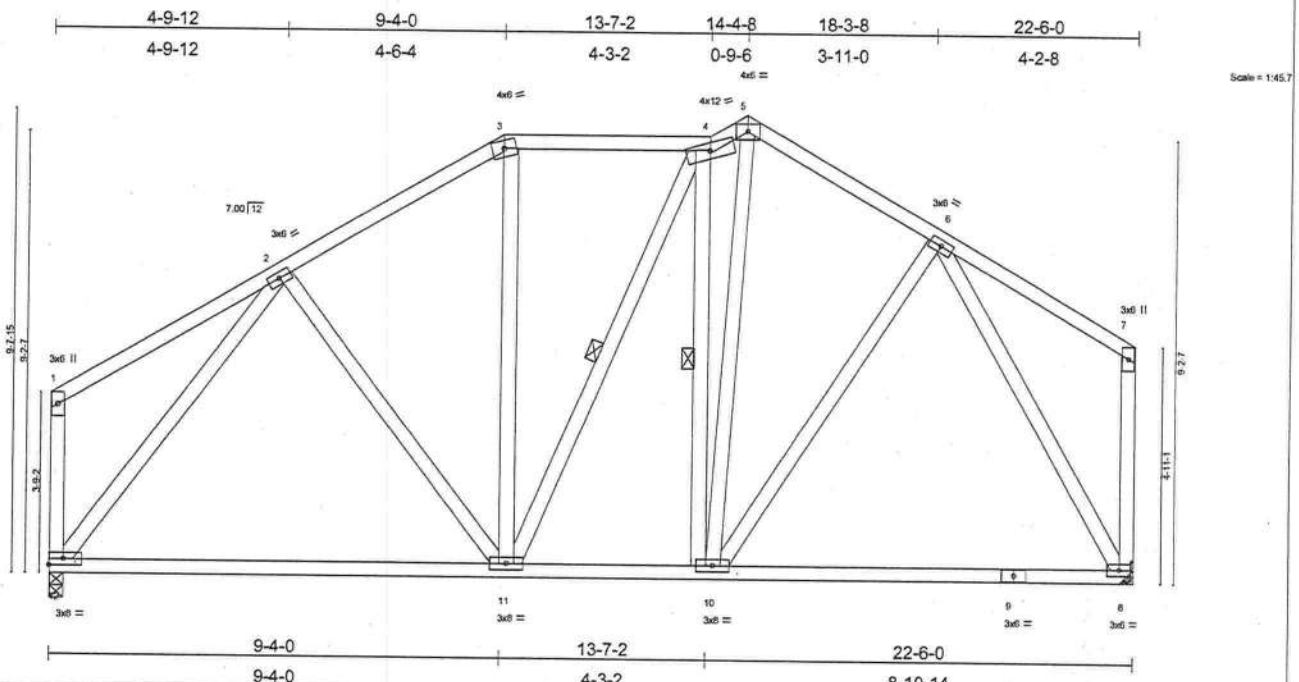

LOADING (psf)		SPACING	2-0-0	CSI		DEFL	in	(loc)	l/defl	L/d	PLATES	GRIP
TCLL	20.0	Plates Increase	1.25	TC	0.38	Vert(LL)	-0.14	11-12	>999	240	MT20	244/190
TCDL	7.0	Lumber Increase	1.25	BC	0.34	Vert(TL)	-0.25	11-12	>999	180		
BCLL	10.0	Rep Stress Incr	YES	WB	0.85	Horz(TL)	0.02	8	n/a	n/a		
BCDL	5.0	Code FBC2001/TPI2002		(Matrix)							Weight: 182 lb	

LUMBER
TOP CHORD 2 X 4 SYP No.2D
BOT CHORD 2 X 4 SYP No.2D
WEBS 2 X 4 SYP No.3 *Except*
W1 2 X 4 SYP No.2D, W9 2 X 4 SYP No.2D

BRACING
TOP CHORD Structural wood sheathing directly applied or 6-0-0 oc purlins, except end verticals.
BOT CHORD Rigid ceiling directly applied or 10-0-0 oc bracing.
WEBS 1 Row at midpt 4-11, 4-10

REACTIONS (lb/size) 12=933/0-3-8, 8=933/Mechanical
Max Horz 12=197(load case 4)
Max Uplift12=-284(load case 5), 8=-261(load case 5)

FORCES (lb) - Maximum Compression/Maximum Tension
TOP CHORD 1-2=-165/82, 2-3=-747/362, 3-4=-594/362, 4-5=-589/361, 5-6=-672/353, 6-7=-119/66, 1-12=-180/114, 7-8=-147/95
BOT CHORD 11-12=-298/536, 10-11=-176/570, 9-10=-158/423, 8-9=-158/423
WEBS 2-11=-112/130, 3-11=-28/140, 4-11=-130/124, 4-10=-401/260, 5-10=-194/376, 6-10=-96/255, 2-12=-756/300, 6-8=-751/316

NOTES
1) Unbalanced roof live loads have been considered for this design.
2) Wind: ASCE 7-98; 110mph (3-second gust); h=20ft; TCDL=4.2psf; BCDL=3.0psf; Category II; Exp B; enclosed; MWFRS gable end zone and C-C Exterior(2) zone; Lumber DOL=1.60 plate grip DOL=1.60. This truss is designed for C-C for members and forces, and for MWFRS for reactions specified.
3) Provide adequate drainage to prevent water ponding.
4) Refer to girder(s) for truss to truss connections.
5) Provide mechanical connection (by others) of truss to bearing plate capable of withstanding 284 lb uplift at joint 12 and 261 lb uplift at joint 8.

LOAD CASE(S) Standard

SEPTEMBER 21, 2005 TRUSS DESIGN ENGINEER:
THOMAS E. MILLER PE 56877, BYRON K. ANDERSON PE 60987
STRUCTURAL ENGINEERING AND INSPECTIONS, INC. EB 9196
16105 N. FLORIDA AVE. STE B, LUTZ, FL 33549

Job	Truss	Truss Type	Qty	Ply	
L130833	T27	HIP	1	1	Job Reference (optional)

Dwg.#092105644

Builders FirstSource, Lake City, Fl 32055

6.200 s Jul 13 2005 MiTek Industries, Inc. Tue Sep 20 17:51:15 2005 Page 1

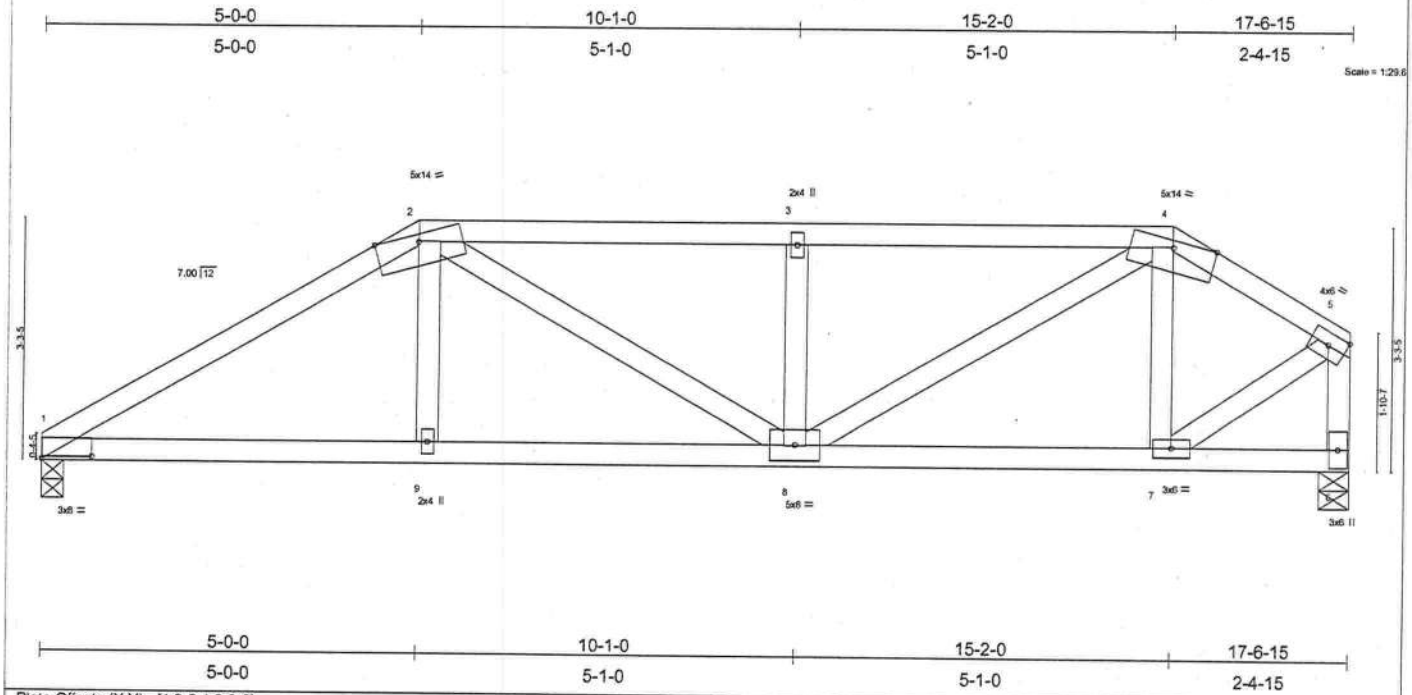

Plate Offsets (X,Y): [1:0-8-1,0-0-6]

LOADING (psf)		SPACING 2-0-0		CSI		DEFL	in	(loc)	l/defl	L/d	PLATES	GRIP
TCLL	20.0	Plates Increase	1.25	TC	0.42	Vert(LL)	0.09	8-9	>999	240	MT20	244/190
TCDL	7.0	Lumber Increase	1.25	BC	0.45	Vert(TL)	-0.13	8-9	>999	180		
BCLL	10.0	Rep Stress Incr	NO	WB	0.48	Horz(TL)	0.03	6	n/a	n/a		
BCDL	5.0	Code FBC2001/TPI2002		(Matrix)							Weight: 88 lb	

LUMBER
TOP CHORD 2 X 4 SYP No.2D
BOT CHORD 2 X 4 SYP No.2D
WEBS 2 X 4 SYP No.3 *Except*
W4 2 X 4 SYP No.2D

BRACING
TOP CHORD Structural wood sheathing directly applied or 4-4-7 oc purlins, except end verticals.
BOT CHORD Rigid ceiling directly applied or 5-10-3 oc bracing.

REACTIONS (lb/size) 1=1194/0-3-8, 6=1438/0-4-15
Max Horz 1=102(load case 4)
Max Uplift1=-804(load case 3), 6=-955(load case 2)

FORCES (lb) - Maximum Compression/Maximum Tension
TOP CHORD 1-2=-2026/1388, 2-3=-2037/1487, 3-4=-2037/1487, 4-5=-1309/874, 5-6=-1424/933
BOT CHORD 1-9=-1239/1694, 8-9=-1253/1717, 7-8=-758/1117, 6-7=-11/11
WEBS 2-9=-289/463, 2-8=-399/456, 3-8=-486/496, 4-8=-850/1079, 4-7=-219/245, 5-7=-943/1353

NOTES
1) Unbalanced roof live loads have been considered for this design.
2) Wind: ASCE 7-98; 110mph (3-second gust); h=20ft; TCDL=4.2psf; BCDL=3.0psf; Category II; Exp B; enclosed; MWFRS gable end zone; porch left and right exposed; Lumber DOL=1.60 plate grip DOL=1.60.
3) Provide adequate drainage to prevent water ponding.
4) Provide mechanical connection (by others) of truss to bearing plate capable of withstanding 804 lb uplift at joint 1 and 955 lb uplift at joint 6.
5) Girder carries hip end with 2-4-15 right side setback, 5-0-0 left side setback, and 5-0-0 end setback.
6) Hanger(s) or other connection device(s) shall be provided sufficient to support concentrated load(s) 363 lb down and 198 lb up at 15-2-0, and 245 lb down and 170 lb up at 5-0-0 on bottom chord. The design/selection of such connection device(s) is the responsibility of others.
7) In the LOAD CASE(S) section, loads applied to the face of the truss are noted as front (F) or back (B).

LOAD CASE(S) Standard
1) Regular: Lumber Increase=1.25, Plate Increase=1.25
Uniform Loads (plf)
Vert: 1-2=-54, 2-4=-91(F=-37), 4-5=-54, 1-9=-30, 7-9=-50(F=-20), 6-7=-30
Concentrated Loads (lb)
Vert: 9=-245(F) 7=-363(F)

SEPTEMBER 21, 2005 TRUSS DESIGN ENGINEER:
THOMAS E. MILLER PE 56877, BYRON K. ANDERSON PE 60987
STRUCTURAL ENGINEERING AND INSPECTIONS, INC. EB 9196
16105 N. FLORIDA AVE. STE B, LUTZ, FL 33549

Job	Truss	Truss Type	Qty	Ply	
L130833	T28	HIP	1	1	Job Reference (optional)

Dwg.#092105645

Builders FirstSource, Lake City, Fl 32055

6.200 s Jul 13 2005 MiTek Industries, Inc. Tue Sep 20 17:51:15 2005 Page 1

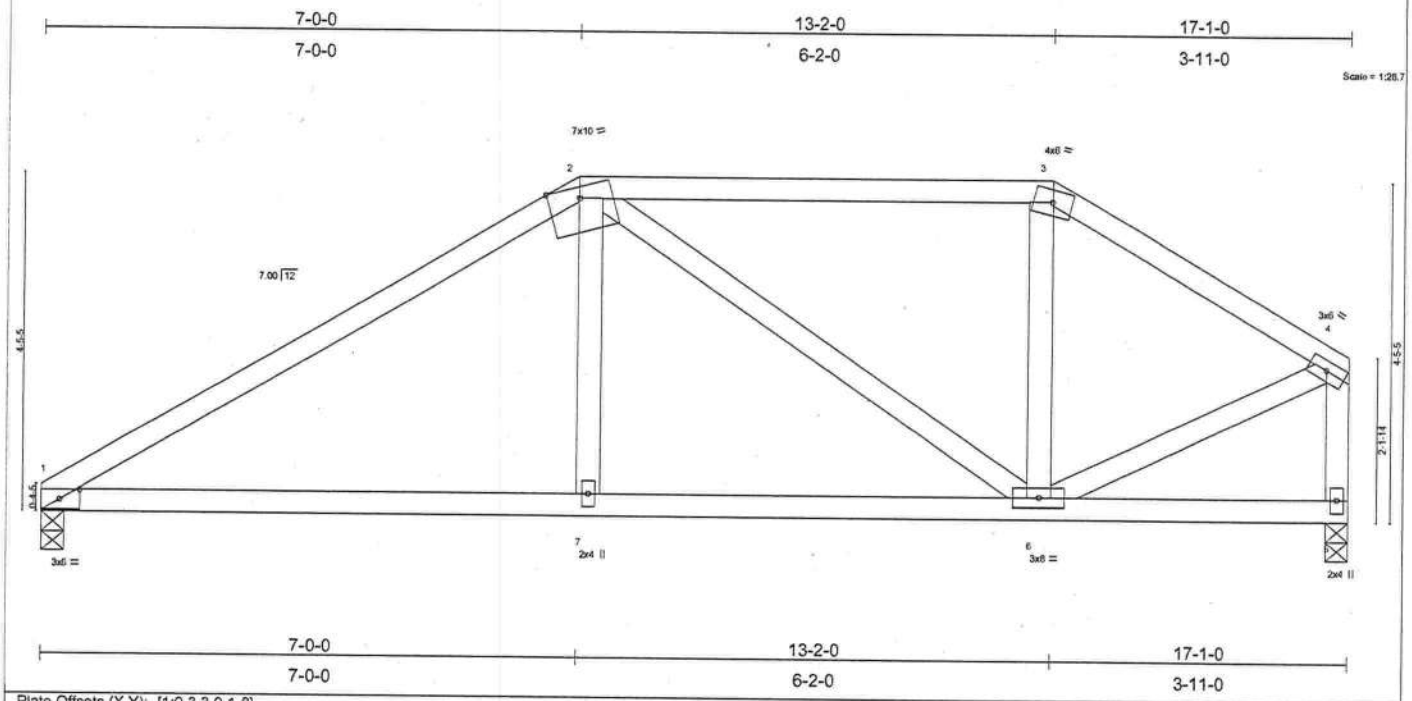

Plate Offsets (X,Y): [1:0-3-3,0-1-8]

LOADING (psf)		SPACING	2-0-0	CSI		DEFL	in	(loc)	l/defl	L/d	PLATES	GRIP
TCLL	20.0	Plates Increase	1.25	TC	0.37	Vert(LL)	0.22	1-7	>930	240	MT20	244/190
TCDL	7.0	Lumber Increase	1.25	BC	0.38	Vert(TL)	0.18	1-7	>999	180		
BCLL	10.0	Rep Stress Incr	YES	WB	0.30	Horz(TL)	-0.02	5	n/a	n/a		
BCDL	5.0	Code FBC2001/TPI2002		(Matrix)							Weight: 84 lb	

LUMBER
TOP CHORD 2 X 4 SYP No.2D
BOT CHORD 2 X 4 SYP No.2D
WEBS 2 X 4 SYP No.3 *Except*
W4 2 X 4 SYP No.2D

BRACING
TOP CHORD Structural wood sheathing directly applied or 6-0-0 oc purlins, except end verticals.
BOT CHORD Rigid ceiling directly applied or 6-5-2 oc bracing.

REACTIONS (lb/size) 1=705/0-3-8, 5=705/0-3-8
Max Horz 1=136(load case 4)
Max Uplift1=-413(load case 4), 5=-408(load case 3)

FORCES (lb) - Maximum Compression/Maximum Tension
TOP CHORD 1-2=-996/983, 2-3=-543/661, 3-4=-670/708, 4-5=-648/665
BOT CHORD 1-7=-837/783, 6-7=-851/792, 5-6=-54/40
WEBS 2-7=-407/242, 2-6=-338/348, 3-6=-190/93, 4-6=-561/559

NOTES
1) Unbalanced roof live loads have been considered for this design.
2) Wind: ASCE 7-98; 110mph (3-second gust); h=20ft; TCDL=4.2psf; BCDL=3.0psf; Category II; Exp B; enclosed; MWFRS gable end zone and C-C Exterior(2) zone; porch left and right exposed; Lumber DOL=1.60 plate grip DOL=1.60. This truss is designed for C-C for members and forces, and for MWFRS for reactions specified.
3) Provide adequate drainage to prevent water ponding.
4) Provide mechanical connection (by others) of truss to bearing plate capable of withstanding 413 lb uplift at joint 1 and 408 lb uplift at joint 5.

LOAD CASE(S) Standard

SEPTEMBER 21, 2005 TRUSS DESIGN ENGINEER:
THOMAS E. MILLER PE 56877, BYRON K. ANDERSON PE 60987
STRUCTURAL ENGINEERING AND INSPECTIONS, INC. EB 9196
16105 N. FLORIDA AVE. STE B, LUTZ, FL 33549

Job	Truss	Truss Type	Qty	Ply	Dwg.#092105646
L130833	T29	SPECIAL	1	1	Job Reference (optional)

Builders FirstSource, Lake City, Fl 32055

6.200 s Jul 13 2005 MiTek Industries, Inc. Tue Sep 20 17:51:16 2005 Page 1

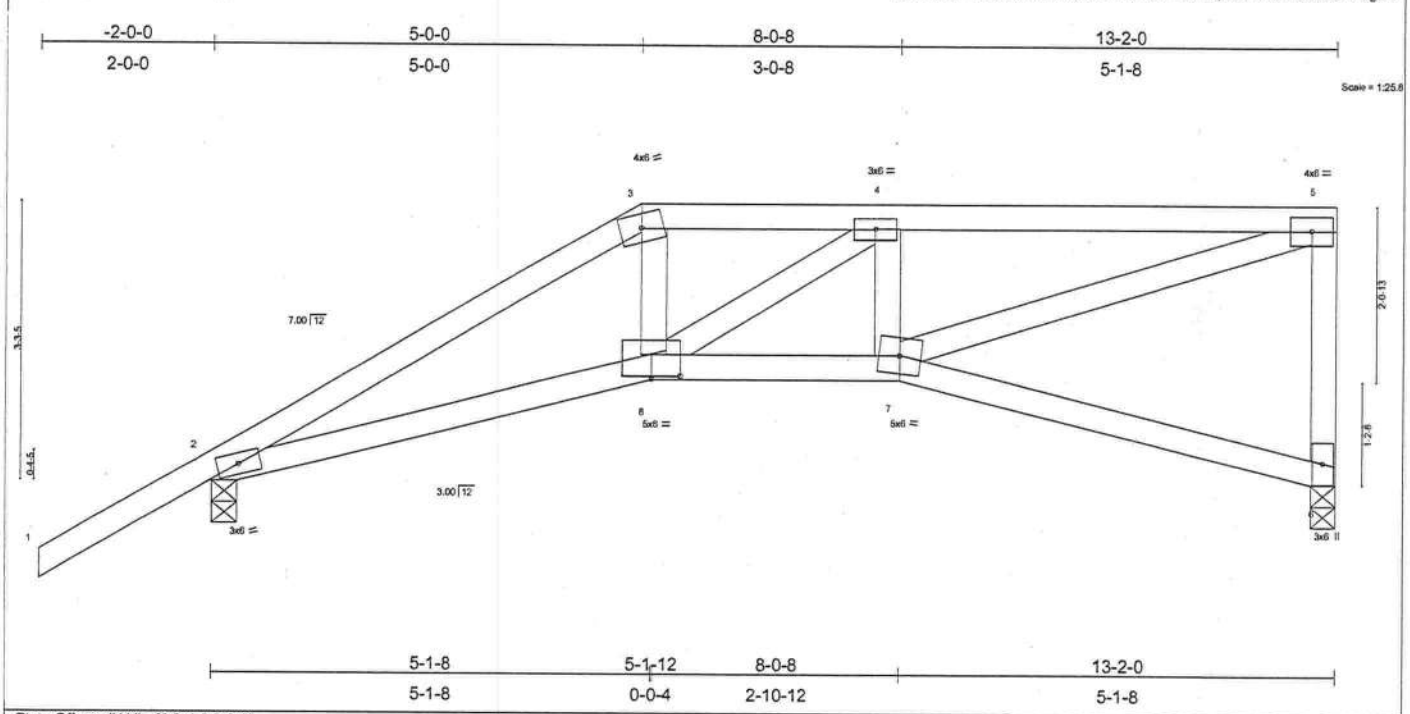

Plate Offsets (X,Y): [8:0-4-0,0-0-8]

LOADING (psf)		SPACING	2-0-0	CSI		DEFL	in	(loc)	l/defl	L/d	PLATES	GRIP
TCLL	20.0	Plates Increase	1.25	TC	0.66	Vert(LL)	0.08	7-8	>999	240	MT20	244/190
TCDL	7.0	Lumber Increase	1.25	BC	0.43	Vert(TL)	-0.12	7-8	>999	180		
BCLL	10.0	Rep Stress Incr	NO	WB	0.55	Horz(TL)	0.08	6	n/a	n/a		
BCDL	5.0	Code FBC2001/TPI2002		(Matrix)							Weight: 65 lb	

LUMBER
TOP CHORD 2 X 4 SYP No.2D
BOT CHORD 2 X 4 SYP No.2D
WEBS 2 X 4 SYP No.3

BRACING
TOP CHORD Structural wood sheathing directly applied or 4-5-1 oc purlins, except end verticals.
BOT CHORD Rigid ceiling directly applied or 6-9-13 oc bracing.

REACTIONS (lb/size) 6=939/0-3-8, 2=956/0-3-8
Max Horz 2=210(load case 4)
Max Uplift6=-484(load case 2), 2=-475(load case 4)

FORCES (lb) - Maximum Compression/Maximum Tension
TOP CHORD 1-2=0/53, 2-3=-2060/961, 3-4=-1758/876, 4-5=-1723/874, 5-6=-821/507
BOT CHORD 2-8=-875/1756, 7-8=-903/1754, 6-7=-56/128
WEBS 3-8=-408/808, 4-8=-62/183, 4-7=-372/348, 5-7=-874/1724

NOTES
1) Wind: ASCE 7-98; 110mph (3-second gust); h=20ft; TCDL=4.2psf; BCDL=3.0psf; Category II; Exp B; enclosed; MWFRS gable end zone; Lumber DOL=1.60 plate grip DOL=1.60.
2) Provide adequate drainage to prevent water ponding.
3) Bearing at joint(s) 6, 2 considers parallel to grain value using ANSI/TPI 1 angle to grain formula. Building designer should verify capacity of bearing surface.
4) Provide mechanical connection (by others) of truss to bearing plate capable of withstanding 484 lb uplift at joint 6 and 475 lb uplift at joint 2.
5) Girder carries hip end with 0-0-0 right side setback, 5-0-0 left side setback, and 5-0-0 end setback.
6) Hanger(s) or other connection device(s) shall be provided sufficient to support concentrated load(s) 245 lb down and 170 lb up at 5-1-12 on bottom chord. The design/selection of such connection device(s) is the responsibility of others.
7) In the LOAD CASE(S) section, loads applied to the face of the truss are noted as front (F) or back (B).

LOAD CASE(S) Standard
1) Regular: Lumber Increase=1.25, Plate Increase=1.25
Uniform Loads (plf)
Vert: 1-3=-54, 3-5=-91(F=-37), 2-8=-30, 7-8=-50(F=-20), 6-7=-50(F=-20)
Concentrated Loads (lb)
Vert: 8=-245(F)

SEPTEMBER 21, 2005 TRUSS DESIGN ENGINEER:
THOMAS E. MILLER PE 56877, BYRON K. ANDERSON PE 60987
STRUCTURAL ENGINEERING AND INSPECTIONS, INC. EB 9196
16105 N. FLORIDA AVE. STE B, LUTZ, FL 33549

Job	Truss	Truss Type	Qty	Ply	
L130833	T30	SPECIAL	1	1	Job Reference (optional)

Dwg.#092105647

Builders FirstSource, Lake City, Fl 32055

6.200 s Jul 13 2005 MiTek Industries, Inc. Tue Sep 20 17:51:16 2005 Page 1

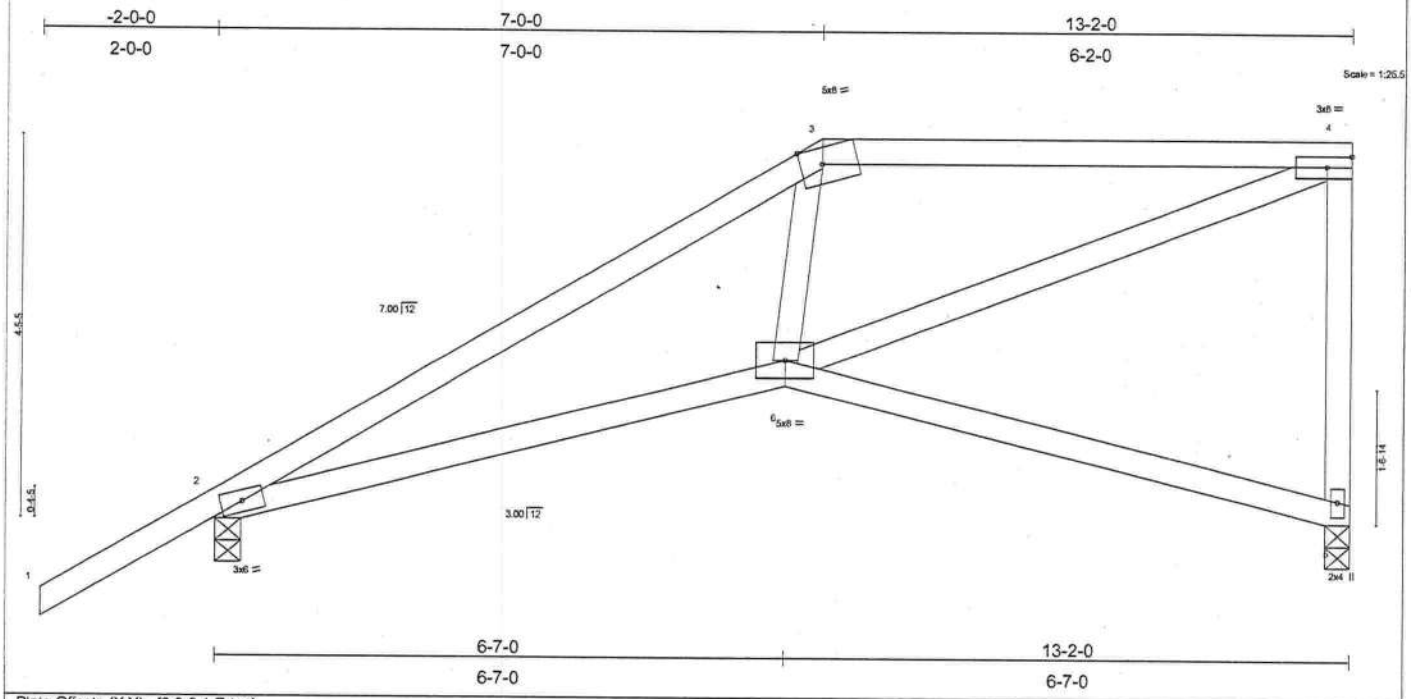

Plate Offsets (X,Y): [3:0-3-1,Edge]

LOADING (psf)		SPACING	2-0-0	CSI		DEFL	in	(loc)	l/defl	L/d	PLATES	GRIP
TCLL	20.0	Plates Increase	1.25	TC	0.37	Vert(LL)	-0.07	2-6	>999	240	MT20	244/190
TCDL	7.0	Lumber Increase	1.25	BC	0.34	Vert(TL)	-0.11	2-6	>999	180		
BCLL	10.0	Rep Stress Incr	YES	WB	0.35	Horz(TL)	0.04	5	n/a	n/a		
BCDL	5.0	Code FBC2001/TPI2002		(Matrix)							Weight: 64 lb	

LUMBER
TOP CHORD 2 X 4 SYP No.2D
BOT CHORD 2 X 4 SYP No.2D
WEBS 2 X 4 SYP No.3

BRACING
TOP CHORD Structural wood sheathing directly applied or 5-11-8 oc purlins, except end verticals.
BOT CHORD Rigid ceiling directly applied or 10-0-0 oc bracing.

REACTIONS (lb/size) 5=531/0-3-8, 2=666/0-3-8
Max Horz 2=263(load case 5)
Max Uplift5=-183(load case 4), 2=-278(load case 5)

FORCES (lb) - Maximum Compression/Maximum Tension
TOP CHORD 1-2=0/53, 2-3=-1069/363, 3-4=-816/407, 4-5=-451/270
BOT CHORD 2-6=-408/890, 5-6=-33/68
WEBS 3-6=0/129, 4-6=-421/833

NOTES
1) Wind: ASCE 7-98; 110mph (3-second gust); h=20ft; TCDL=4.2psf; BCDL=3.0psf; Category II; Exp B; enclosed; MWFRS gable end zone and C-C Exterior(2) zone; Lumber DOL=1.60 plate grip DOL=1.60. This truss is designed for C-C for members and forces, and for MWFRS for reactions specified.
2) Provide adequate drainage to prevent water ponding.
3) Bearing at joint(s) 5, 2 considers parallel to grain value using ANSI/TPI 1 angle to grain formula. Building designer should verify capacity of bearing surface.
4) Provide mechanical connection (by others) of truss to bearing plate capable of withstanding 183 lb uplift at joint 5 and 278 lb uplift at joint 2.

LOAD CASE(S) Standard

SEPTEMBER 21, 2005 TRUSS DESIGN ENGINEER:
THOMAS E. MILLER PE 56877, BYRON K. ANDERSON PE 60987
STRUCTURAL ENGINEERING AND INSPECTIONS, INC. EB 9196
16105 N. FLORIDA AVE. STE B, LUTZ, FL 33549

Job	Truss	Truss Type	Qty	Ply	
L130833	T31	SPECIAL	1	1	Job Reference (optional)

Dwg.#092105648

Builders FirstSource, Lake City, Fl 32055

6.200 s Jul 13 2005 MiTek Industries, Inc. Tue Sep 20 17:51:17 2005 Page 1

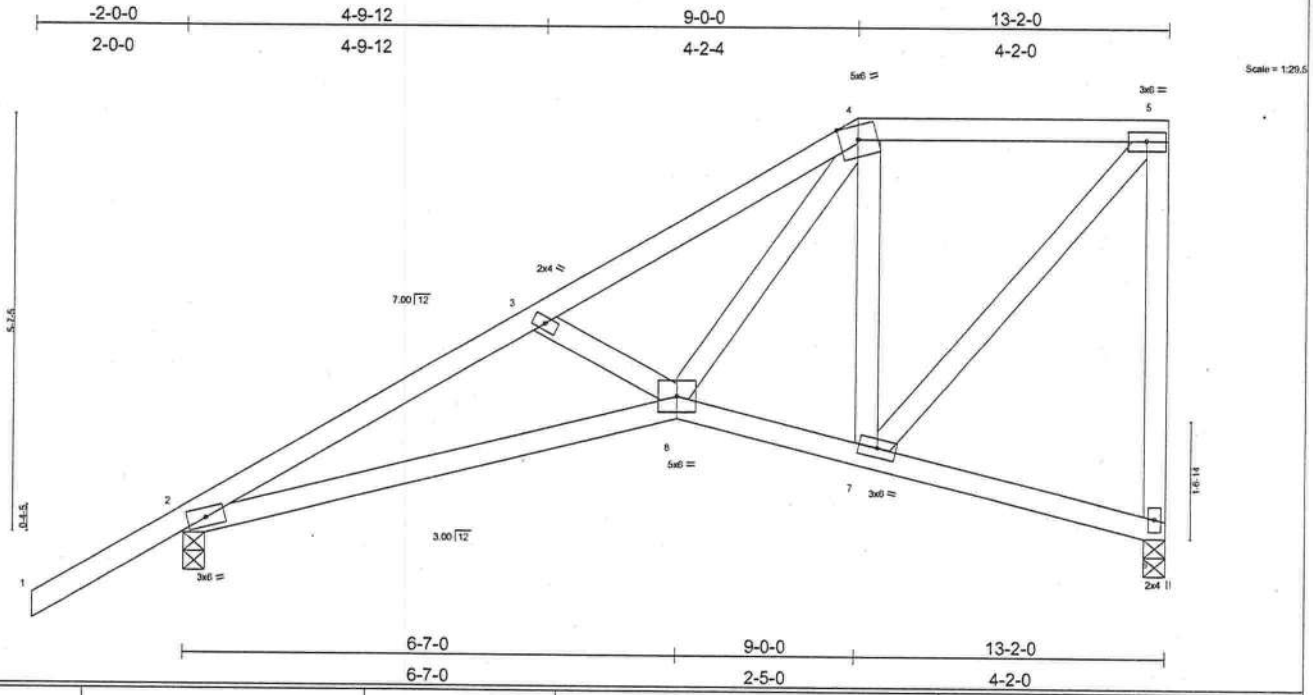

LOADING (psf)		SPACING 2-0-0		CSI		DEFL	in	(loc)	l/defl	L/d	PLATES	GRIP
TCLL	20.0	Plates Increase	1.25	TC	0.29	Vert(LL)	-0.06	2-8	>999	240	MT20	244/190
TCDL	7.0	Lumber Increase	1.25	BC	0.25	Vert(TL)	-0.10	2-8	>999	180		
BCLL	10.0	Rep Stress Incr	YES	WB	0.22	Horz(TL)	0.04	6	n/a	n/a		
BCDL	5.0	Code FBC2001/TPI2002		(Matrix)							Weight: 77 lb	

LUMBER
TOP CHORD 2 X 4 SYP No.2D
BOT CHORD 2 X 4 SYP No.2D
WEBS 2 X 4 SYP No.3

BRACING
TOP CHORD Structural wood sheathing directly applied or 6-0-0 oc purlins, except end verticals.
BOT CHORD Rigid ceiling directly applied or 9-0-6 oc bracing.

REACTIONS (lb/size) 6=531/0-3-8, 2=666/0-3-8
Max Horz 2=317(load case 5)
Max Uplift6=-175(load case 5), 2=-274(load case 5)

FORCES (lb) - Maximum Compression/Maximum Tension
TOP CHORD 1-2=0/53, 2-3=-1132/394, 3-4=-908/324, 4-5=-347/181, 5-6=-473/274
BOT CHORD 2-8=-513/962, 7-8=-193/384, 6-7=-9/27
WEBS 3-8=-210/210, 4-8=-261/686, 4-7=-386/251, 5-7=-266/503

NOTES
1) Wind: ASCE 7-98; 110mph (3-second gust); h=20ft; TCDL=4.2psf; BCDL=3.0psf; Category II; Exp B; enclosed; MWFRS gable end zone and C-C Exterior(2) zone; Lumber DOL=1.60 plate grip DOL=1.60. This truss is designed for C-C for members and forces, and for MWFRS for reactions specified.
2) Provide adequate drainage to prevent water ponding.
3) Bearing at joint(s) 6, 2 considers parallel to grain value using ANSI/TPI 1 angle to grain formula. Building designer should verify capacity of bearing surface.
4) Provide mechanical connection (by others) of truss to bearing plate capable of withstanding 175 lb uplift at joint 6 and 274 lb uplift at joint 2.

LOAD CASE(S) Standard

SEPTEMBER 21, 2005 TRUSS DESIGN ENGINEER:
THOMAS E. MILLER PE 56877, BYRON K. ANDERSON PE 60987
STRUCTURAL ENGINEERING AND INSPECTIONS, INC. EB 9196
16105 N. FLORIDA AVE. STE B, LUTZ, FL 33549

Job	Truss	Truss Type	Qty	Ply	
L130833	T32	SPECIAL	1	1	Job Reference (optional)

Dwg.#092105649

Builders FirstSource, Lake City, Fl 32055

6.200 s Jul 13 2005 MiTek Industries, Inc. Tue Sep 20 17:51:18 2005 Page 1

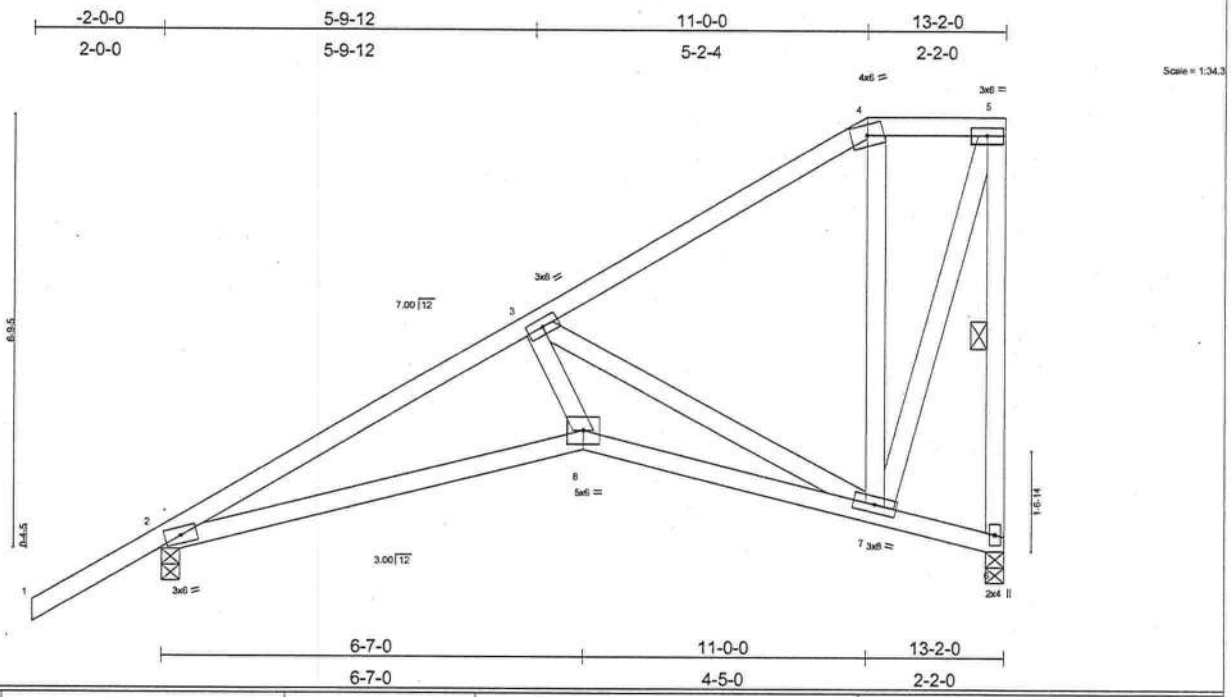

LOADING (psf)		SPACING	2-0-0	CSI		DEFL	in	(loc)	l/defl	L/d	PLATES	GRIP
TCLL	20.0	Plates Increase	1.25	TC	0.22	Vert(LL)	-0.08	2-8	>999	240	MT20	244/190
TCDL	7.0	Lumber Increase	1.25	BC	0.27	Vert(TL)	-0.14	2-8	>999	180		
BCLL	10.0	Rep Stress Incr	YES	WB	0.76	Horz(TL)	0.07	6	n/a	n/a		
BCDL	5.0	Code FBC2001/TPI2002		(Matrix)							Weight: 84 lb	

LUMBER
TOP CHORD 2 X 4 SYP No.2D
BOT CHORD 2 X 4 SYP No.2D
WEBS 2 X 4 SYP No.3

BRACING
TOP CHORD Structural wood sheathing directly applied or 6-0-0 oc purlins, except end verticals.
BOT CHORD Rigid ceiling directly applied or 8-4-14 oc bracing.
WEBS 1 Row at midpt 5-6

REACTIONS (lb/size) 6=531/0-3-8, 2=666/0-3-8
Max Horz 2=371(load case 5)
Max Uplift6=-230(load case 5), 2=-259(load case 5)

FORCES (lb) - Maximum Compression/Maximum Tension
TOP CHORD 1-2=0/53, 2-3=-1093/316, 3-4=-264/38, 4-5=-160/88, 5-6=-516/279
BOT CHORD 2-8=-494/920, 7-8=-594/1242, 6-7=-1/12
WEBS 3-8=-235/758, 3-7=-1168/559, 4-7=-140/172, 5-7=-294/530

NOTES
1) Wind: ASCE 7-98; 110mph (3-second gust); h=20ft; TCDL=4.2psf; BCDL=3.0psf; Category II; Exp B; enclosed; MWFRS gable end zone and C-C Exterior(2) zone; Lumber DOL=1.60 plate grip DOL=1.60. This truss is designed for C-C for members and forces, and for MWFRS for reactions specified.
2) Provide adequate drainage to prevent water ponding.
3) Bearing at joint(s) 6, 2 considers parallel to grain value using ANSI/TPI 1 angle to grain formula. Building designer should verify capacity of bearing surface.
4) Provide mechanical connection (by others) of truss to bearing plate capable of withstanding 230 lb uplift at joint 6 and 259 lb uplift at joint 2.

LOAD CASE(S) Standard

SEPTEMBER 21, 2005 TRUSS DESIGN ENGINEER:
THOMAS E. MILLER PE 56877, BYRON K. ANDERSON PE 60987
STRUCTURAL ENGINEERING AND INSPECTIONS, INC. EB 9196
16105 N. FLORIDA AVE. STE B, LUTZ, FL 33549

Job	Truss	Truss Type	Qty	Ply	Dwg.#092105650
L130833	T33	COMMON	1	1	Job Reference (optional)

Builders FirstSource, Lake City, Fl 32055

6.200 s Jul 13 2005 MiTek Industries, Inc. Tue Sep 20 17:51:18 2005 Page 1

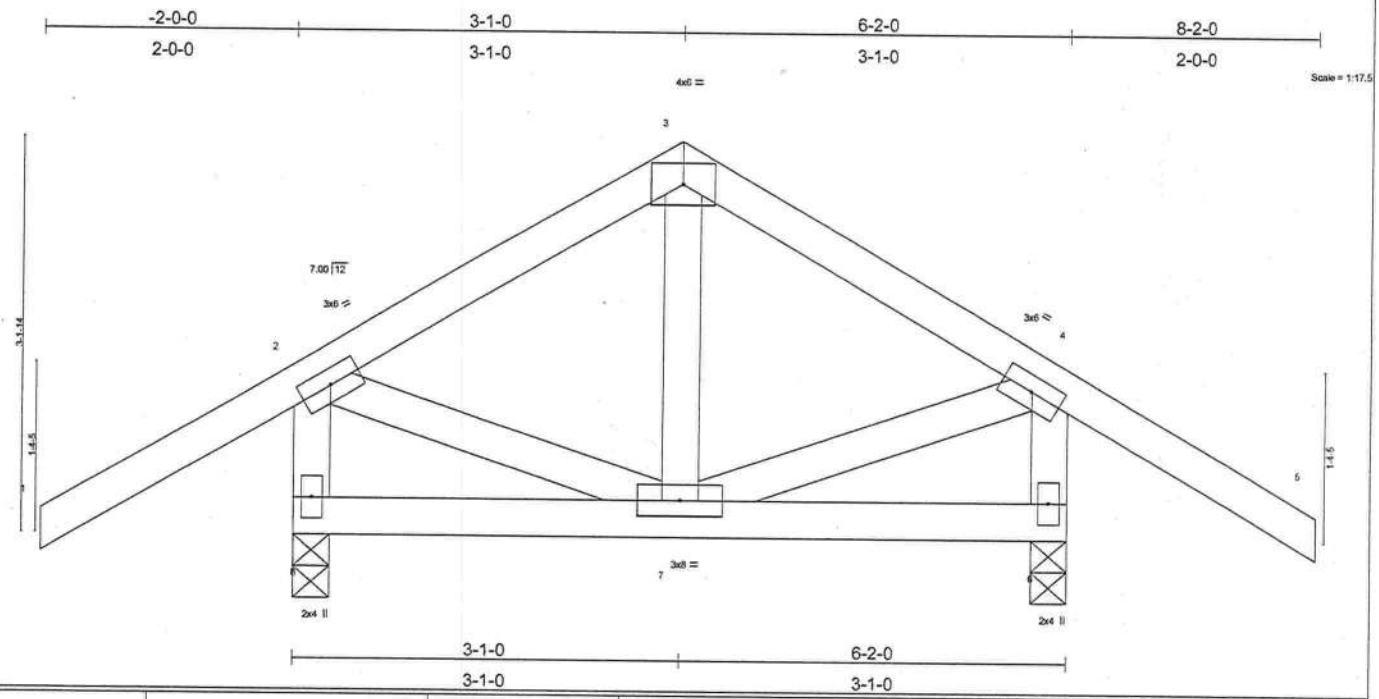

LOADING (psf)		SPACING	2-0-0	CSI		DEFL	in	(loc)	l/defl	L/d	PLATES	GRIP
TCLL	20.0	Plates Increase	1.25	TC	0.27	Vert(LL)	-0.00	6-7	>999	240	MT20	244/190
TCDL	7.0	Lumber Increase	1.25	BC	0.05	Vert(TL)	-0.00	6-7	>999	180		
BCLL	10.0	Rep Stress Incr	YES	WB	0.03	Horz(TL)	0.00	6	n/a	n/a		
BCDL	5.0	Code FBC2001/TPI2002		(Matrix)							Weight: 42 lb	

LUMBER
TOP CHORD 2 X 4 SYP No.2D
BOT CHORD 2 X 4 SYP No.2D
WEBS 2 X 4 SYP No.3 *Except*
W1 2 X 4 SYP No.2D, W1 2 X 4 SYP No.2D

BRACING
TOP CHORD Structural wood sheathing directly applied or 6-0-0 oc purlins, except end verticals.
BOT CHORD Rigid ceiling directly applied or 10-0-0 oc bracing.

REACTIONS (lb/size) 8=363/0-3-8, 6=363/0-3-8
Max Horz 8=123(load case 4)
Max Uplift8=-200(load case 5), 6=-200(load case 6)

FORCES (lb) - Maximum Compression/Maximum Tension
TOP CHORD 1-2=0/58, 2-3=-170/90, 3-4=-170/90, 4-5=0/58, 2-8=-328/250, 4-6=-328/250
BOT CHORD 7-8=-107/111, 6-7=-13/26
WEBS 3-7=-68/47, 2-7=-5/126, 4-7=-5/126

NOTES
1) Unbalanced roof live loads have been considered for this design.
2) Wind: ASCE 7-98; 110mph (3-second gust); h=20ft; TCDL=4.2psf; BCDL=3.0psf; Category II; Exp B; enclosed; MWFRS gable end zone and C-C Exterior(2) zone; end vertical left and right exposed; Lumber DOL=1.60 plate grip DOL=1.60. This truss is designed for C-C for members and forces, and for MWFRS for reactions specified.
3) Provide mechanical connection (by others) of truss to bearing plate capable of withstanding 200 lb uplift at joint 8 and 200 lb uplift at joint 6.

LOAD CASE(S) Standard

SEPTEMBER 21, 2005 TRUSS DESIGN ENGINEER:
THOMAS E. MILLER PE 56877, BYRON K. ANDERSON PE 60987
STRUCTURAL ENGINEERING AND INSPECTIONS, INC. EB 9196
16105 N. FLORIDA AVE. STE B, LUTZ, FL 33549

Job	Truss	Truss Type	Qty	Ply	Dwg.#092105651
L130833	T33G	COMMON	1	1	Job Reference (optional)

Builders FirstSource, Lake City, Fl 32055

6.200 s Jul 13 2005 MiTek Industries, Inc. Tue Sep 20 17:51:19 2005 Page 1

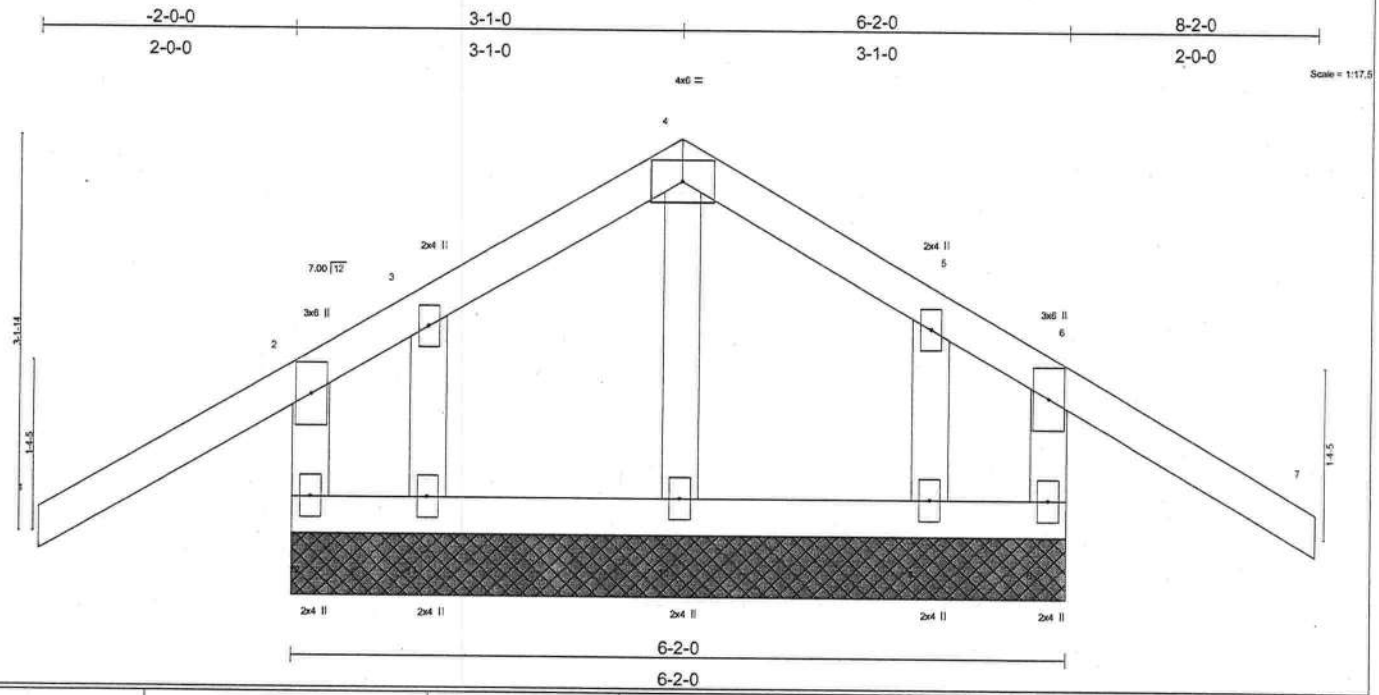

LOADING (psf)		SPACING	2-0-0	CSI		DEFL	in	(loc)	l/defl	L/d	PLATES	GRIP
TCLL	20.0	Plates Increase	1.25	TC	0.26	Vert(LL)	-0.03	7	n/r	90	MT20	244/190
TCDL	7.0	Lumber Increase	1.25	BC	0.05	Vert(TL)	-0.05	7	n/r	80		
BCLL	10.0	Rep Stress Incr	YES	WB	0.04	Horz(TL)	0.00	8	n/a	n/a		
BCDL	5.0	Code FBC2001/TPI2002		(Matrix)							Weight: 38 lb	

LUMBER
TOP CHORD 2 X 4 SYP No.2D
BOT CHORD 2 X 4 SYP No.2D
WEBS 2 X 4 SYP No.2D
OTHERS 2 X 4 SYP No.3

BRACING
TOP CHORD Structural wood sheathing directly applied or 6-2-0 oc purlins, except end verticals.
BOT CHORD Rigid ceiling directly applied or 6-0-0 oc bracing.

REACTIONS (lb/size) 12=164/6-2-0, 8=164/6-2-0, 10=254/6-2-0, 11=72/6-2-0, 9=72/6-2-0
Max Horz 12=90(load case 5)
Max Uplift12=-173(load case 5), 8=-183(load case 6), 10=-24(load case 5), 11=-75(load case 4), 9=-70(load case 3)
Max Grav 12=206(load case 7), 8=206(load case 8), 10=254(load case 1), 11=98(load case 3), 9=93(load case 4)

FORCES (lb) - Maximum Compression/Maximum Tension
TOP CHORD 1-2=0/58, 2-3=-30/58, 3-4=-1/100, 4-5=0/100, 5-6=-25/53, 6-7=0/58, 2-12=-196/255, 6-8=-196/255
BOT CHORD 11-12=-60/120, 10-11=-60/120, 9-10=-60/120, 8-9=-60/120
WEBS 4-10=-193/78, 3-11=-73/50, 5-9=-70/48

NOTES
1) Unbalanced roof live loads have been considered for this design.
2) Wind: ASCE 7-98; 110mph (3-second gust); h=20ft; TCDL=4.2psf; BCDL=3.0psf; Category II; Exp B; enclosed; MWFRS gable end zone and C-C Exterior(2) zone; Lumber DOL=1.60 plate grip DOL=1.60. This truss is designed for C-C for members and forces, and for MWFRS for reactions specified.
3) Truss designed for wind loads in the plane of the truss only. For studs exposed to wind (normal to the face), see MiTek "Standard Gable End Detail"
4) Gable requires continuous bottom chord bearing.
5) Truss to be fully sheathed from one face or securely braced against lateral movement (i.e. diagonal web).
6) Gable studs spaced at 2-0-0 oc.
7) Provide mechanical connection (by others) of truss to bearing plate capable of withstanding 173 lb uplift at joint 12, 183 lb uplift at joint 8, 24 lb uplift at joint 10, 75 lb uplift at joint 11 and 70 lb uplift at joint 9.

LOAD CASE(S) Standard

SEPTEMBER 21, 2005 TRUSS DESIGN ENGINEER:
THOMAS E. MILLER PE 56877, BYRON K. ANDERSON PE 60987
STRUCTURAL ENGINEERING AND INSPECTIONS, INC. EB 9196
16105 N. FLORIDA AVE. STE B, LUTZ, FL 33549

Job	Truss	Truss Type	Qty	Ply	
L130833	T34	COMMON	1	1	Job Reference (optional)

Dwg.#092105652

Builders FirstSource, Lake City, Fl 32055

6.200 s Jul 13 2005 MiTek Industries, Inc. Tue Sep 20 17:51:20 2005 Page 1

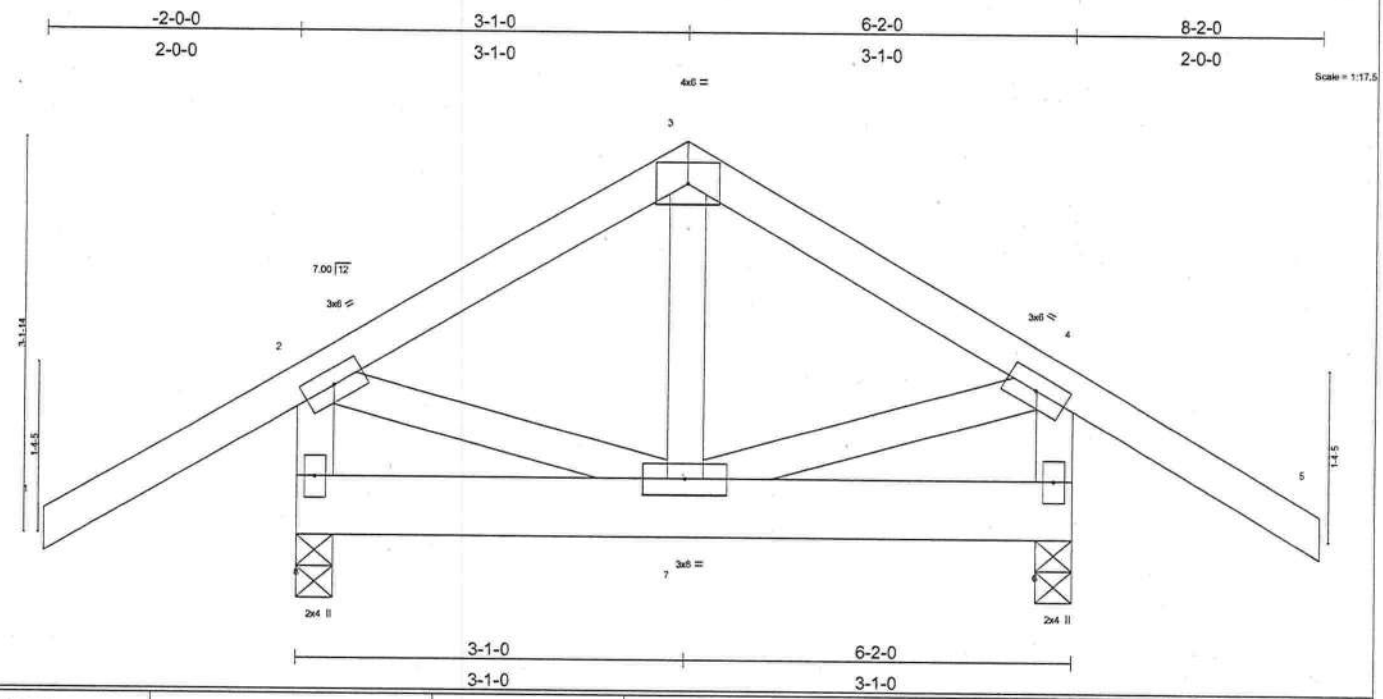

LOADING (psf)		SPACING	2-0-0	CSI		DEFL	in	(loc)	l/defl	L/d	PLATES	GRIP
TCLL	20.0	Plates Increase	1.25	TC	0.28	Vert(LL)	-0.00	7	>999	240	MT20	244/190
TCDL	7.0	Lumber Increase	1.25	BC	0.08	Vert(TL)	-0.01	6-7	>999	180		
BCLL	10.0	Rep Stress Incr	NO	WB	0.09	Horz(TL)	-0.00	6	n/a	n/a		
BCDL	5.0	Code FBC2001/TPI2002		(Matrix)							Weight: 46 lb	

LUMBER
TOP CHORD 2 X 4 SYP No.2D
BOT CHORD 2 X 6 SYP No.1D
WEBS 2 X 4 SYP No.3 *Except*
W1 2 X 4 SYP No.2D, W1 2 X 4 SYP No.2D

BRACING
TOP CHORD Structural wood sheathing directly applied or 6-0-0 oc purlins, except end verticals.
BOT CHORD Rigid ceiling directly applied or 10-0-0 oc bracing.

REACTIONS (lb/size) 8=653/0-3-8, 6=653/0-3-8
Max Horz 8=90(load case 4)
Max Uplift8=-315(load case 4), 6=-315(load case 5)

FORCES (lb) - Maximum Compression/Maximum Tension
TOP CHORD 1-2=0/58, 2-3=-383/136, 3-4=-383/136, 4-5=0/58, 2-8=-498/276, 4-6=-498/276
BOT CHORD 7-8=-90/90, 6-7=0/0
WEBS 3-7=-105/261, 2-7=-67/295, 4-7=-67/295

NOTES
1) Unbalanced roof live loads have been considered for this design.
2) Wind: ASCE 7-98; 110mph (3-second gust); h=20ft; TCDL=4.2psf; BCDL=3.0psf; Category II; Exp B; enclosed; MWFRS gable end zone; Lumber DOL=1.60 plate grip DOL=1.60.
3) Provide mechanical connection (by others) of truss to bearing plate capable of withstanding 315 lb uplift at joint 8 and 315 lb uplift at joint 6.
4) Girder carries tie-in span(s): 7-0-0 from 0-0-0 to 6-2-0
5) In the LOAD CASE(S) section, loads applied to the face of the truss are noted as front (F) or back (B).

LOAD CASE(S) Standard
1) Regular: Lumber Increase=1.25, Plate Increase=1.25
Uniform Loads (plf)
Vert: 1-2=-54, 2-3=-54, 3-4=-54, 4-5=-54, 6-8=-129(F=-99)

SEPTEMBER 21, 2005 TRUSS DESIGN ENGINEER:
THOMAS E. MILLER PE 56877, BYRON K. ANDERSON PE 60987
STRUCTURAL ENGINEERING AND INSPECTIONS, INC. EB 9196
16105 N. FLORIDA AVE. STE B, LUTZ, FL 33549

Symbols

PLATE LOCATION AND ORIENTATION

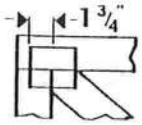

* Center plate on joint unless dimensions indicate otherwise. Dimensions are in inches. Apply plates to both sides of truss and securely seat.

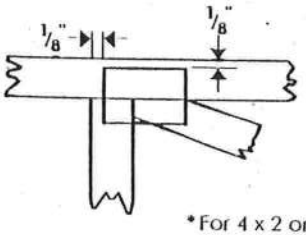

* For 4 x 2 orientation, locate plates 1/8" from outside edge of truss and vertical web.

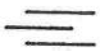

* This symbol indicates the required direction of slots in connector plates.

PLATE SIZE

4 x 4

The first dimension is the width perpendicular to slots. Second dimension is the length parallel to slots.

LATERAL BRACING

Indicates location of required continuous lateral bracing.

BEARING

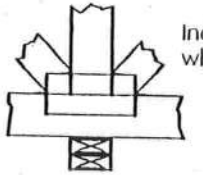

Indicates location of joints at which bearings (supports) occur.

Numbering System

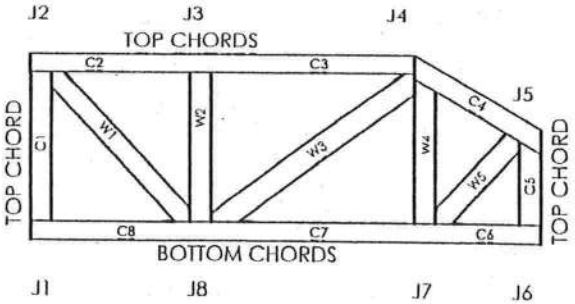

JOINTS AND CHORDS ARE NUMBERED CLOCKWISE AROUND THE TRUSS STARTING AT THE LOWEST JOINT FARTHEST TO THE LEFT.

WEBS ARE NUMBERED FROM LEFT TO RIGHT

CONNECTOR PLATE CODE APPROVALS

BOCA	96-31, 96-67
ICBO	3907, 4922
SBCCI	9667, 9432A
WISC/DILHR	960022-W, 970036-N
NER	561

MiTek Engineering Reference Sheet: MII-7473

General Safety Notes

Failure to Follow Could Cause Property Damage or Personal Injury

1. Provide copies of this truss design to the building designer, erection supervisor, property owner and all other interested parties.
2. Cut members to bear tightly against each other.
3. Place plates on each face of truss at each joint and embed fully. Avoid knots and wane at joint locations.
4. Unless otherwise noted, locate chord splices at ¼ panel length (± 6" from adjacent joint.)
5. Unless otherwise noted, moisture content of lumber shall not exceed 19% at time of fabrication.
6. Unless expressly noted, this design is not applicable for use with fire retardant or preservative treated lumber.
7. Camber is a non-structural consideration and is the responsibility of truss fabricator. General practice is to camber for dead load deflection.
8. Plate type, size and location dimensions shown indicate minimum plating requirements.
9. Lumber shall be of the species and size, and in all respects, equal to or better than the grade specified.
10. Top chords must be sheathed or purlins provided at spacing shown on design.
11. Bottom chords require lateral bracing at 10 ft. spacing, or less, if no ceiling is installed, unless otherwise noted.
12. Anchorage and / or load transferring connections to trusses are the responsibility of others unless shown.
13. Do not overload roof or floor trusses with stacks of construction materials.
14. Do not cut or alter truss member or plate without prior approval of a professional engineer.
15. Care should be exercised in handling, erection and installation of trusses.

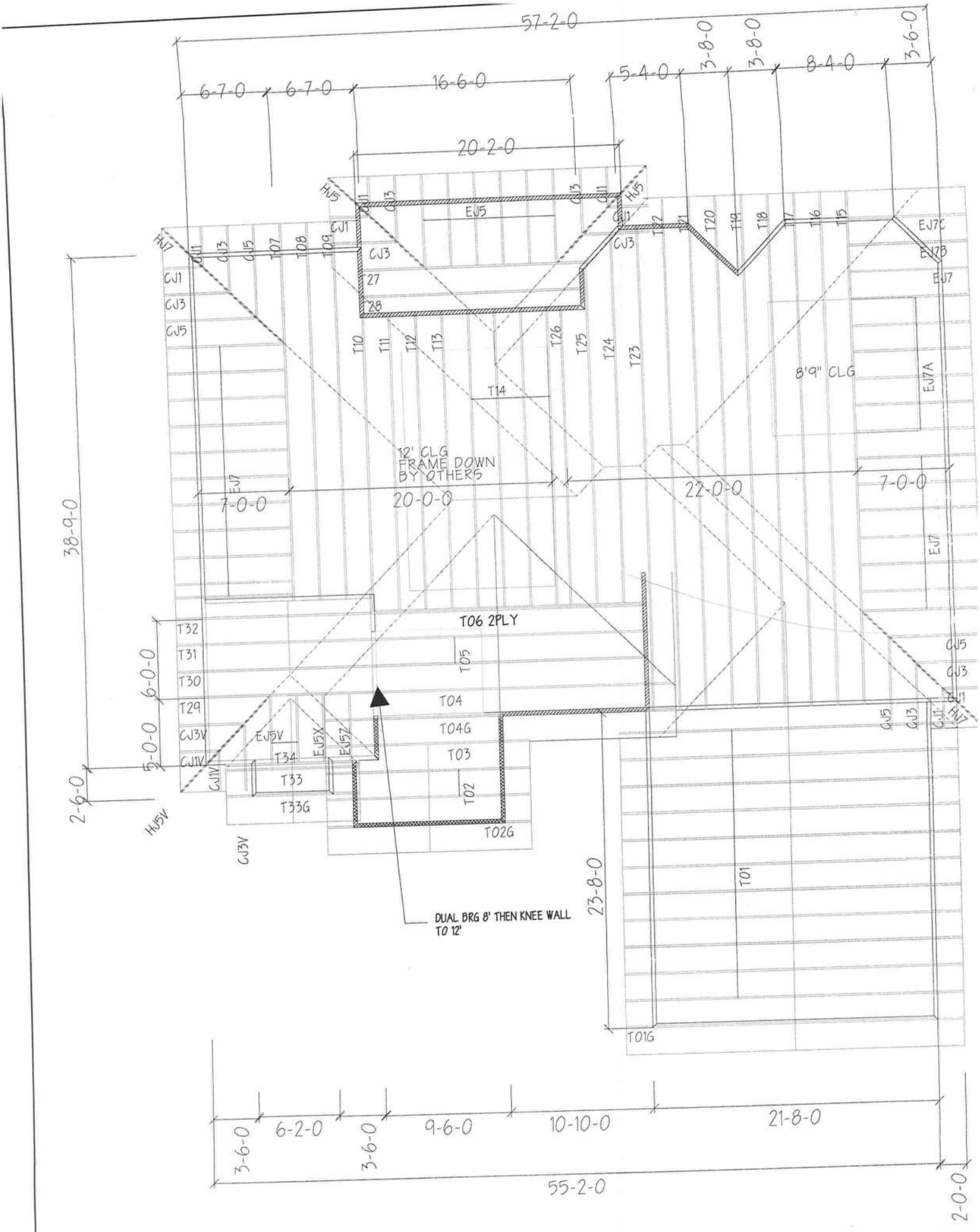
57-2-0
6-7-0
6-7-0
16-6-0
5-4-0
3-8-0
3-8-0
8-4-0
3-6-0
20-2-0
EJ5
EJ7C
EJ7B
EJ7
EJ7A
8'9" CLG
12' CLG
FRAME DOWN
BY OTHERS
7-0-0
20-0-0
22-0-0
7-0-0
38-9-0
T06 2PLY
T05
T04
T04G
T03
T02
T02G
T01
T01G
T33
T33G
T34
EJ5V
EJ5X
EJ5Z
6-0-0
5-0-0
2-6-0
23-8-0
DUAL BRG 8' THEN KNEE WALL
TO 12'
3-6-0
6-2-0
3-6-0
9-6-0
10-10-0
21-8-0
55-2-0
2-0-0