SPA DATA	
LENGTH	6' - 0"
WIDTH	20' - 0"
AREA	120 SF
PERIMETER	52 lin. ft
MIN. DEPTH	3'
MAX. DEPTH	3'
VOLUME	1,900
RECIRC. RATE	.375 GPM/SF
TURN OVER RATE	19 min.
BATHER LOAD	12

PIPING AND HYDRAULICS			
LINE TYPE	SIZE	FLOW (GPM)	VEL (FPS)
RETURN	2-1/2"	100	6.54
MAIN DRAIN (GRAVITY, TWO - 6" LINES)	*6"*	*196 EA*	*2.22*
SKIMMER	2-1/2"	60.0 GPM @ 60%	3.92
PUMP SUCTION FR. TANK RECIRC	3"	100	4.54
PUMP SUCTION FR. TANK (THERAPY)	4"	146	3.73
THERAPY RETURN	3"	146	6.63

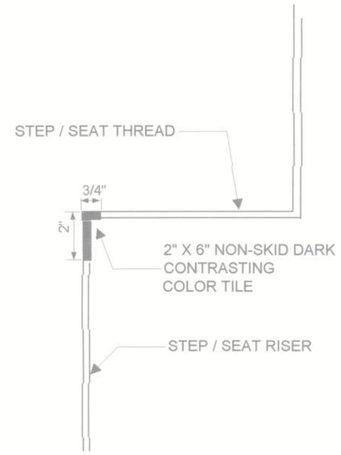

STEP/BENCH RISER DETAIL
NTS

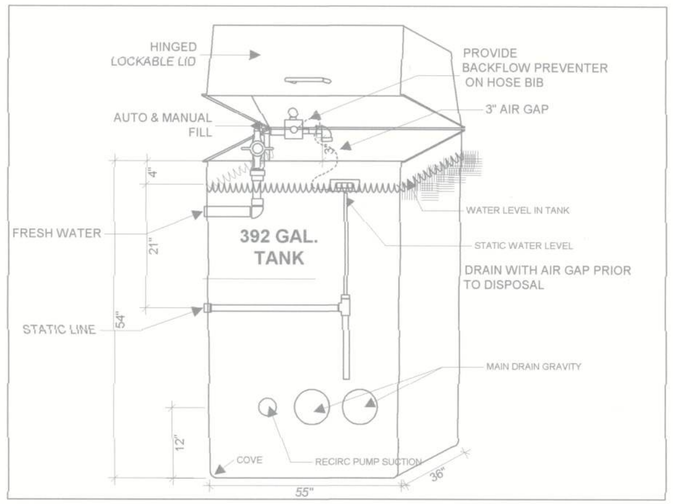

POOLDESIGN.NET
1000 EAST ATLANTIC BLVD.
SUITE 100
POMPANO BEACH FLA 33060
(954) 941-1124
info@swimmingpoolplan.com
CERTIFICATE OF AUTHORIZATION N. 9871

REVISIONS

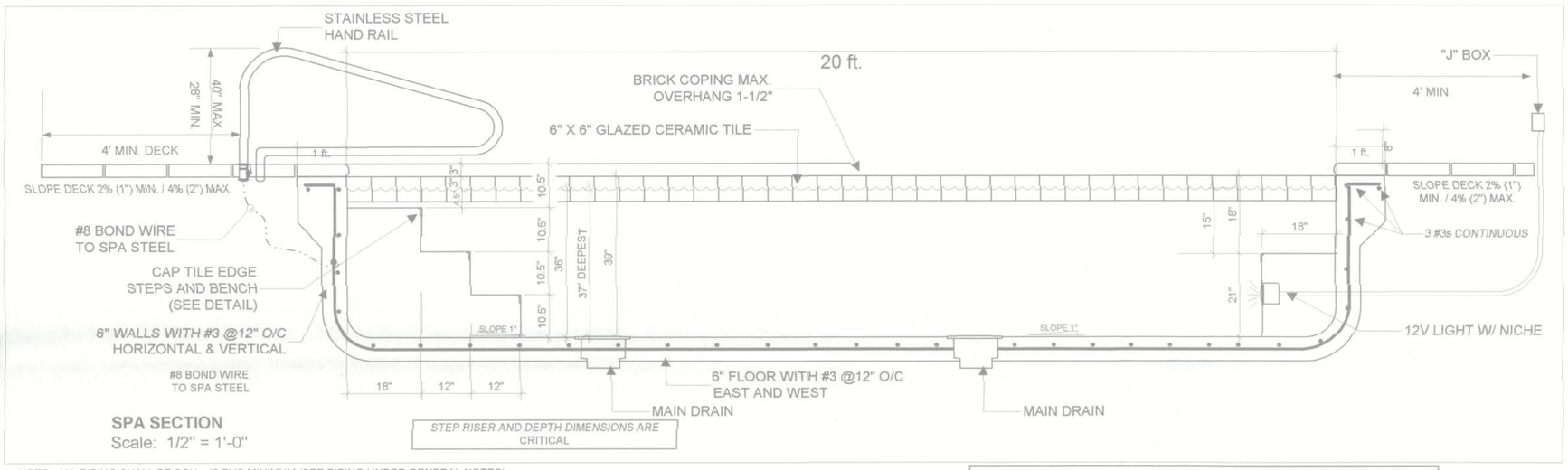

SPA SECTION
Scale: 1/2" = 1'-0"

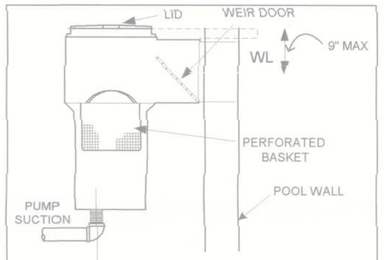

SPA SKIMMER DETAIL
NTS

NOTE : ALL PIPING SHALL BE SCH - 40 PVC MINIMUM (SEE PIPING UNDER GENERAL NOTES).

FILTRATION				
Q	ITEM	MFGR	PART #	DESCRIPTION
1	MAIN PUMP (SELF PRIMING)	JANDY	SHPM2.0	2 HP @ 3450 RPM100 GPM @ 60 TDH, 1PH 230V
3	HAIR AND LINT STRAINER	JANDY		5" W/ BASKET ON PUMP
2	THERAPY PUMP	JANDY	SHPF3.0	3 HP @ 3450 RPM 230 V
1	FILTER	JANDY	SV580	580 SQ. FT. CARTRIDGE W/AIR BLEED & BOTTOM DRAIN
2	GAUGE(s) -PRESSURE		MARSHALL	2" DIAMETER MIN. 0-60 PSI
1	FLOWMETER	BLUE WHITE	F300	1.5" 20-100 GPM RANGE
1	COLLECTOR TANK		FIBERGLASS	392 GAL. FIBERGLASS TANK WITH AUTO-FILL & LID

DISINFECTION				
1	*CHLORINE FEEDER*	*ROLA-CHEM*	*RC-103 SC*	*32 GAL. PER DAY*
1	PH FEEDER	ROLA-CHEM	RC-103 SC	32 GAL. PER DAY
2	CHEMICAL CONTAINERS			SHARED WITH POOL
1	CHEMICAL CONTROL	ROLA-CHEM	554000	AUTOMATED ORP/PH CONTROLLER 120V

SPA FITTINGS AND DRAINS				
Q	ITEM	MFGR	PART #	DESCRIPTION
2	SKIMMER	HAYWARD	SP1071	N.S.F. APPROVED
4	INLET FITTINGS	PENTAIR	SP-1419D	1-1/2" ADJUSTABLE (DIRECTIONAL) PLASTIC WALL INLETS
16	THERAPY JETS	WATERWAY		PLASTIC JET W/ AIR VENTURY LINE
2	MAIN DRAIN (s)	LAWSON AQUATICS	MLD-SG1212WT	1.5 FPS VEL. MAX.COVER OPEN AREA 81.3
1	LIGHT	JANDY	WSLV100WS100	12V.100W, WITH LOW WATER CUT-OFF & TRANSFORMER
1	LIGHT NICHE	JANDY		UNDERWATER LIGHT NICHE

DECK AND OTHER EQUIPMENT				
Q	ITEM	MFGR	PART #	DESCRIPTION
1	HAND RAIL (S)	S.R. SMITH		STAINLESS STEEL - FIGURE "4"
*1	HEATER	JANDY	EE3000T-R	ELECTRIC HEAT PUMP
*1	HEATER	JANDY		400,000 BTU LP GAS HEATER

**MATERIALS IN HEATER ARE NON-TOXIC AND ACCEPTRABLE FOR POTABLE USE*

CARTRIDGE FILTERS HAVE MET THE REQUIREMENTS OF NSF STD-50 - 1993. CARTRIDGES ARE PERMANENTLY MARKED W/ MFGRS. NAME, PORE SIZE AND FILTER AREA ON END CAP.
SURFACE SKIMMER HAS MET THE REQUIREMENTS FOR NSF STD-50 - 1992

NOTES:
1. ALL STEPS, SEAT, FLOOR, COPING AND DECKS SHALLE BE IMPERVIOUS AND SLIP RESISTANT AND ALL HORIZONTAL *SURFACES SHALL BE UNGLAZED.*

2. MAXIMUM VELOCITY THROUGH THE MAIN DRAIN GRATE(s) SHALL BE 1.5FPS AND GRATES SHALL BE SECURED SO THAT THE USE OF A TOOL IS REQUIRED TO REMOVE IT.

3. POST A SIGN AT POOLSIDE "MAXIMUM TEMPERATURE 104 F.

4. HANDRAILS MUST BE ANCHORED INTO OR EXTEND OVER THE BOTTOM STEP, BUT NOT EXTEND PAST THE BOTTOM STEP.

5. MAIN DRAIN PIPE IS DESIGNED TO CARRY SPA RECIRCULATION FLOW AND ANTICIPATED FLOW THROUGH THE THERAPY JETS.

6. SPA INTERIOR SHALL BE WHITE OF LIGHT IN COLOR DIAMOND BRITE

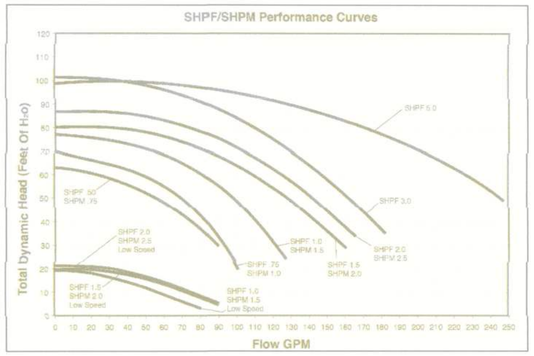

LAWSON AQUATICS
MAIN DRAIN
MLD - SG1212 WT
340 GPM FLOOR

6" SIDE PORT

SUMP DETAIL
1.5 FPS VEL. MAX
DRAIN COVER OPEN AREA 81.3

VGB APPROVED COVER SECURED SO THAT TOOLS ARE REQUIRED FOR REMOVAL

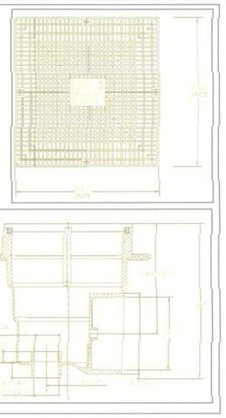

MAIN DRAIN DETAIL
NTS

SUWANNEE VALLEY RESORT

B. M. AKERS
LICENSE
No. 68449
2/4/12
B. M. AKERS
Florida P.E. License No. 68449
STATE OF FLORIDA
PROFESSIONAL ENGINEER
POMPANO BEACH, FL
(954) 941-1124
info@swimmingpoolplan.com

AQUATAN POOLS
OF
FLORIDA INC.

CRAIG PERKINS
561 248 0299

TITLE
SUWANNEE VALLEY RESORT

DESCRIPTION
786 NW STEVEN FOSTER DRIVE
WHITE SPRINGS, FL. 32096

Scale: 1/2" = 1'-0"

PAGE 5 OF 6
DATE 2/4/2012

POOLDESIGN.NET