DATE 10/13/2010

Columbia County Building Permit

This Permit Must Be Prominently Posted on Premises During Construction

PERMIT
000028937

APPLICANT ROBERT MAY PHONE 752-0347

ADDRESS 174 SW DALMATION LANE LAKE CITY FL 32024

OWNER ROBERT MAY PHONE 752-0347

ADDRESS 174 SW DALMATION LANE LAKE CITY FL 32024

CONTRACTOR OWNER BUILDER PHONE

LOCATION OF PROPERTY 90W, L PINEMOUNT, TL ON RAY DRIVE, TO THE END
RAY DR AND DALMATION

TYPE DEVELOPMENT CAR PORT ESTIMATED COST OF CONSTRUCTION 5000.00

HEATED FLOOR AREA TOTAL AREA HEIGHT 16.00 STORIES

FOUNDATION WALLS ROOF PITCH FLOOR

LAND USE & ZONING RSF-2 MAX. HEIGHT 35

Minimum Set Back Requirments: STREET-FRONT 25.00 REAR 15.00 SIDE 10.00

NO. EX.D.U. 1 FLOOD ZONE NA DEVELOPMENT PERMIT NO.

PARCEL ID 04-4S-16-02764-000 SUBDIVISION WESTWOOD ACRES

LOT 2 BLOCK PHASE UNIT 0 TOTAL ACRES

Culvert Permit No.	Culvert Waiver	Contractor's License Number	Applicant/Owner/Contractor	
EXISTING	X10-378	BK	TC	N
Driveway Connection	Septic Tank Number	LU & Zoning checked by	Approved for Issuance	New Resident

COMMENTS: NOC ON FILE

Check # or Cash 2609

FOR BUILDING & ZONING DEPARTMENT ONLY

(footer/Slab)

Temporary Power _____ date/app. by Foundation _____ date/app. by Monolithic _____ date/app. by

Under slab rough-in plumbing _____ date/app. by Slab _____ date/app. by Sheathing/Nailing _____ date/app. by

Framing _____ date/app. by Insulation _____ date/app. by

Rough-in plumbing above slab and below wood floor _____ date/app. by Electrical rough-in _____ date/app. by

Heat & Air Duct _____ date/app. by Peri. beam (Lintel) _____ date/app. by Pool _____ date/app. by

Permanent power _____ date/app. by C.O. Final _____ date/app. by Culvert _____ date/app. by

Pump pole _____ date/app. by Utility Pole _____ date/app. by M/H tie downs, blocking, electricity and plumbing _____ date/app. by

Reconnection _____ date/app. by RV _____ date/app. by Re-roof _____ date/app. by

BUILDING PERMIT FEE $ 25.00 CERTIFICATION FEE $ 0.00 SURCHARGE FEE $ 0.00

MISC. FEES $ 0.00 ZONING CERT. FEE $ FIRE FEE $ 0.00 WASTE FEE $

FLOOD DEVELOPMENT FEE $ FLOOD ZONE FEE $ CULVERT FEE $ **TOTAL FEE** 25.00

INSPECTORS OFFICE L. Hodges CLERKS OFFICE CH

NOTICE: IN ADDITION TO THE REQUIREMENTS OF THIS PERMIT, THERE MAY BE ADDITIONAL RESTRICTIONS APPLICABLE TO THIS PROPERTY THAT MAY BE FOUND IN THE PUBLIC RECORDS OF THIS COUNTY. AND THERE MAY BE ADDITIONAL PERMITS REQUIRED FROM OTHER GOVERNMENTAL ENTITIES SUCH AS WATER MANAGEMENT DISTRICTS, STATE AGENCIES, OR FEDERAL AGENCIES.

"WARNING TO OWNER: YOUR FAILURE TO RECORD A NOTICE OF COMMENCEMENT MAY RESULT IN YOUR PAYING TWICE FOR IMPROVEMENTS TO YOUR PROPERTY. IF YOU INTEND TO OBTAIN FINANCING, CONSULT WITH YOUR LENDER OR AN ATTORNEY BEFORE RECORDING YOUR NOTICE OF COMMENCEMENT."

EVERY PERMIT ISSUED SHALL BECOME INVALID UNLESS THE WORK AUTHORIZED BY SUCH PERMIT IS COMMENCED WITHIN 180 DAYS AFTER ITS ISSUANCE, OR IF THE WORK AUTHORIZED BY SUCH PERMIT IS SUSPENDED OR ABANDONED FOR A PERIOD OF 180 DAYS AFTER THE TIME THE WORK IS COMMENCED. A VALID PERMIT RECIEVES AN APPROVED INSPECTION EVERY 180 DAYS. WORK SHALL BE CONSIDERED NOT SUSPENDED, ABANDONED OR INVALID WHEN THE PERMIT HAS RECIEVED AN APPROVED INSPECTION WITHIN 180 DAYS OT THE PREVIOUS INSPECTION.

The Issuance of this Permit Does Not Waive Compliance by Permittee with Deed Restrictions.

Columbia County Building Permit Application #25-00

For Office Use Only Application # 1010-07 Date Received 10/11/10 By LH Permit # 28937

Zoning Official BLK Date 13.10.10 Flood Zone X Land Use Res Low Den Zoning RSF-2

FEMA Map # N/A Elevation N/A MFE N/A River N/A Plans Examiner T.C. Date 10-13-10

Comments

☐ NOC ☐ EH ☑ Deed or PA ☑ Site Plan ☑ State Road Info ☐ Parent Parcel #

☐ Dev Permit # ☐ In Floodway ☐ Letter of Auth. from Contractor ☐ F W Comp. letter

IMPACT FEES: EMS Fire Corr Road/Code

School = TOTAL N/A Accessory Use ☑ VF form ☑ APP fee Pa

Septic Permit No. X10-378 in box Fax

Name Authorized Person Signing Permit Robert W. May Phone 386 752-0347

Address 174 SW Dalmatian Ln. Lake City FL 32024

Owners Name Same Phone

911 Address 174 SW Dalmatian LN, Lake City, FL 32024

Contractors Name Owner-Builder Phone

Address 0

Fee Simple Owner Name & Address N/A

Bonding Co. Name & Address N/A

Architect/Engineer Name & Address

Mortgage Lenders Name & Address N/A

Circle the correct power company - FL Power & Light - Clay Elec. - Suwannee Valley Elec. - Progress Energy

Property ID Number 04-4S-16-02764-000 Estimated Cost of Construction $5,000

Subdivision Name Westwood Acres Lot 2 Block D Unit Phase

Driving Directions 90W, TL Pinemount, TL Ray Dr, to the end - house across the street

Number of Existing Dwellings on Property 1

Construction of Car Port Total Acreage Lot Size

Do you need a - Culvert Permit or Culvert Waiver or Have an Existing Drive Total Building Height 16'

Actual Distance of Structure from Property Lines - Front N. ~~109'~~ Side E. 165' Side W. ~~53'~~ Rear S. ~~198'~~

Number of Stories Heated Floor Area N/A Total Floor Area N/A Roof Pitch

Application is hereby made to obtain a permit to do work and installations as indicated. I certify that no work or installation has commenced prior to the issuance of a permit and that all work be performed to meet the standards of all laws regulating construction in this jurisdiction.

Columbia County Building Permit Application

TIME LIMITATIONS OF APPLICATION : An application for a permit for any proposed work shall be deemed to have been abandoned 180 days after the date of filing, unless such application has been pursued in good faith or a permit has been issued; except that the building official is authorized to grant one or more extensions of time for additional periods not exceeding 90 days each. The extension shall be requested in writing and justifiable cause demonstrated.

TIME LIMITATIONS OF PERMITS: Every permit issued shall become invalid unless the work authorized by such permit is commenced within 180 days after its issuance, or if the work authorized by such permit is suspended or abandoned for a period of 180 days after the time work is commenced. A valid permit receives an approved inspection every 180 days. Work shall be considered not suspended, abandoned or invalid when the permit has received an approved inspection within 180 days of the previous approved inspection.

FLORIDA'S CONSTRUCTION LIEN LAW: Protect Yourself and Your Investment: According to Florida Law, those who work on your property or provide materials, and are not paid-in-full, have a right to enforce their claim for payment against your property. This claim is known as a construction lien. If your contractor fails to pay subcontractors or material suppliers or neglects to make other legally required payments, the people who are owed money may look to your property for payment, even if you have paid your contractor in full.
This means if a lien is filed against your property, it could be sold against your will to pay for labor, materials or other services which your contractor may have failed to pay.

NOTICE OF RESPONSIBILITY TO BUILDING PERMITEE: ***YOU ARE HEREBY NOTIFIED*** as the recipient of a building permit from Columbia County, Florida, you will be held responsible to the County for any damage to sidewalks and/or road curbs and gutters, concrete features and structures, together with damage to drainage facilities, removal of sod, major changes to lot grades that result in ponding of water, or other damage to roadway and other public infrastructure facilities caused by you or your contractor, subcontractors, agents or representatives in the construction and/or improvement of the building and lot for which this permit is issued. No certificate of occupancy will be issued until all corrective work to these public infrastructures and facilities has been corrected.

WARNING TO OWNER: YOUR FAILURE TO RECORD A NOTICE OF COMMENCMENT MAY RESULT IN YOU PAYING TWICE FOR IMPROVEMENTS TO YOUR PROPERTY. A NOTICE OF COMMENCEMENT MUST BE RECORDED AND POSTED ON THE JOB SITE BEFORE THE FIRST INSPECTION. IF YOU INTEND TO OBTAIN FINANCING, CONSULT WITH YOUR LENDER OR ATTORNEY BEFORE RECORDING YOUR NOTICE OF COMMENCEMENT.

OWNERS CERTIFICATION: I CERTIFY THAT ALL THE FOREGOING INFORMATION IS ACCURATE AND THAT ALL WORK WILL BE DONE IN COMPLIANCE WITH ALL APPLICABLE LAWS REGULATING CONSTRUCTION AND ZONING.

NOTICE TO OWNER: There are some properties that may have deed restrictions recorded upon them. These restrictions may limit or prohibit the work applied for in your building permit. It may be to your advantage to check and see if your property is encumbered by any restrictions.

(Owners Must Sign All Applications Before Permit Issuance.)

X _____

Owners Signature ****OWNER BUILDERS MUST PERSONALLY APPEAR AND SIGN THE BUILDING PERMIT.**

CONTRACTORS AFFIDAVIT: By my signature I understand and agree that I have informed and provided this written statement to the owner of all the above written responsibilities in Columbia County for obtaining this Building Permit including all application and permit time limitations.

_____
Contractor's Signature (Permitee)

Contractor's License Number_____
Columbia County
Competency Card Number_____

Affirmed under penalty of perjury to by the Contractor and subscribed before me this ____ day of _____ 20___.

Personally known_____ or Produced Identification_____

_____ **SEAL:**

State of Florida Notary Signature (For the Contractor)

1010-17

NOTICE OF COMMENCEMENT

Tax Parcel Identification Number 04-4S-16-02764-000

County Clerk's Office Stamp or Seal

THE UNDERSIGNED hereby gives notice that improvements will be made to certain real property, and in accordance with Section 713.13 of the Florida Statutes, the following information is provided in this **NOTICE OF COMMENCEMENT.**

1. Description of property *(legal description)*: Westwood Acres
   a) Street *(job)* Address: 174 SW Dalmation Ln, Lake City, FL 32024
2. General description of improvements: Car Port
3. Owner Information
   a) Name and address: Robert May
   b) Name and address of fee simple titleholder (if other than owner)
   c) Interest in property Owner
4. Contractor Information
   a) Name and address: Owner Builder
   b) Telephone No.:
5. Surety Information
   a) Name and address: N/A
   b) Amount of Bond:
   c) Telephone No.:
6. Lender
   a) Name and address: N/A
   b) Phone No.
7. Identity of person within the State of Florida designated by owner upon whom notices or other documents may be served:
   a) Name and address: N/A
   b) Telephone No.: Fax No. (Opt.)
8. In addition to himself, owner designates the following person to receive a copy of the Lienor's Notice as provided in Section 713.13(l)(b), Florida Statutes:
   a) Name and address: N/A
   b) Telephone No.: Fax No. (Opt.)
9. Expiration date of Notice of Commencement **(the expiration date is one year from the date of recording unless a different date is specified):**

Inst:201012016373 Date:10/12/2010 Time:11:08 AM
DC.P DeWitt Cason,Columbia County Page 1 of 1 B:1202 P:2275

WARNING TO OWNER: ANY PAYMENTS MADE BY THE OWNER AFTER THE EXPIRATION OF THE NOTICE OF COMMENCEMENT ARE CONSIDERED IMPROPER PAYMENTS UNDER CHAPTER 713, PART I, SECTION 713.13, FLORIDA STATUTES, AND CAN RESULT IN YOUR PAYING TWICE FOR IMPROVEMENTS TO YOUR PROPERTY; A NOTICE OF COMMENCEMENT MUST BE RECORDED AND POSTED ON THE JOB SITE BEFORE THE FIRST INSPECTION. IF YOU INTEND TO OBTAIN FINANCING, CONSULT YOUR LENDER OR AN ATTORNEY BEFORE COMMENCING WORK OR RECORDING YOUR NOTICE OF COMMENCEMENT.

STATE OF FLORIDA
COUNTY OF COLUMBIA

10. Signature of Owner or Owner's Authorized Office/Director/Partner/Manager

Robert May
Print Name

The foregoing instrument was acknowledged before me, a Florida Notary, this 11 day of October, 20 10, by: Robert May as Owner **(type of authority, e.g. officer, trustee, attorney fact)** for Robert May **(name of party on behalf of whom instrument was executed).**

Personally Known ____ OR Produced Identification ✓ Type FLDL

Notary Signature

Notary Stamp or Seal:

LAURIE HODSON
MY COMMISSION # DD 805657
EXPIRES: July 14, 2012
Bonded Thru Notary Public Underwriters

—AND—

11. Verification pursuant to Section 92.525, Florida Statutes. Under penalties of perjury, I declare that I have read the foregoing and that the facts stated in it are true to the best of my knowledge and belief.

Signature of Natural Person Signing (in line #10 above.)

Columbia County Property Appraiser

DB Last Updated: 8/5/2010

2009 Tax Roll Year

Tax Collector | Tax Estimator | Property Card | Parcel List Generator | Interactive GIS Map | Print

Parcel: 04-4S-16-02764-000

<< Next Lower Parcel | Next Higher Parcel >>

Search Result: 1 of 2 Next >>

Owner & Property Info

Owner's Name	MAY ROBERT W		
Mailing Address	174 SW DALMATION LN LAKE CITY, FL 32024		
Site Address	174 SW DALMATION LN		
Use Desc. (code)	SINGLE FAM (000100)		
Tax District	2 (County)	**Neighborhood**	4416
Land Area	2.030 ACRES	**Market Area**	06
Description	NOTE: This description is not to be used as the Legal Description for this parcel in any legal transaction.		
LOT 2 BLOCK D WESTWOOD ACRES. ORB 392-535, 407-334, 636-044, 845-255,			

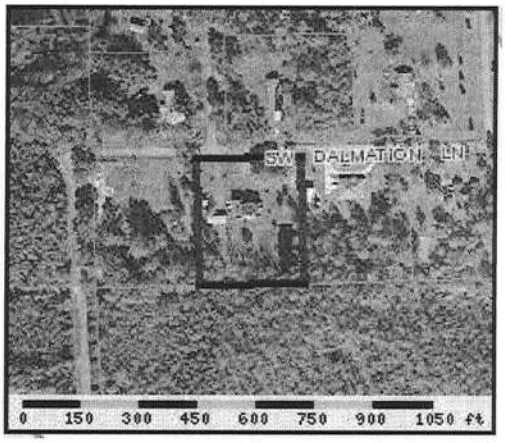

Property & Assessment Values

2009 Certified Values		
Mkt Land Value	cnt: (0)	$20,827.00
Ag Land Value	cnt: (1)	$0.00
Building Value	cnt: (1)	$144,191.00
XFOB Value	cnt: (5)	$19,340.00
Total Appraised Value		$184,358.00
Just Value		$184,358.00
Class Value		$0.00
Assessed Value		$144,488.00
Exempt Value	(code: HX 13)	$144,488.00
Total Taxable Value		Cnty: $0 Other: $0 | Schl: $0

2010 Working Values

NOTE:
2010 Working Values are NOT certified values and therefore are subject to change before being finalized for ad valorem assessment purposes.

Show Working Values

Sales History

Show Similar Sales within 1/2 mile

Sale Date	OR Book/Page	OR Code	Vacant / Improved	Qualified Sale	Sale RCode	Sale Price
8/20/1997	845/255	WD	I	U	03	$96,300.00

Building Characteristics

Bldg Item	Bldg Desc	Year Blt	Ext. Walls	Heated S.F.	Actual S.F.	Bldg Value
1	SINGLE FAM (000100)	1975	COMMON BRK (19)	3312	4598	$141,190.00
	Note: All S.F. calculations are based on exterior building dimensions.					

Extra Features & Out Buildings

Code	Desc	Year Blt	Value	Units	Dims	Condition (% Good)
0166	CONC,PAVMT	0	$300.00	0000001.000	0 x 0 x 0	(000.00)
0190	FPLC PF	0	$1,200.00	0000001.000	0 x 0 x 0	(000.00)
0258	PATIO	0	$160.00	0000001.000	0 x 0 x 0	(000.00)
0060	CARPORT F	1993	$1,728.00	0000576.000	24 x 24 x 0	AP (040.00)
0280	POOL R/CON	2007	$13,464.00	0000480.000	16 x 30 x 0	(000.00)

SITE PLAN

Columbia County Property Appraiser

J. Doyle Crews - Lake City, Florida 32055 | 386-758-1083

PARCEL: -

Name:		**2009 Certified Values**	
Site:		Land	
Mail:		Bldg	
Sales Info	NONE	Assd	
		Exmpt	
		Taxbl	

NOTES:

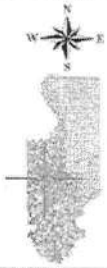

This information.GIS Map Updated: 8/5/2010, was derived from data which was compiled by the Columbia County Property Appraiser Office solely for the governmental purpose of property assessment. This information should not be relied upon by anyone as a determination of the ownership of property or market value. No warranties, expressed or implied, are provided for the accuracy of the data herein, it's use, or it's interpretation. Although it is periodically updated, this information may not reflect the data currently on file in the Property Appraiser's office. The assessed values are NOT certified values and therefore are subject to change before being finalized for ad valorem assessment purposes.

powered by: GrizzlyLogic.com

SUBCONTRACTOR VERIFICATION FORM

APPLICATION NUMBER _____ CONTRACTOR _____ PHONE _____

THIS FORM MUST BE SUBMITTED PRIOR TO THE ISSUANCE OF A PERMIT

In Columbia County one permit will cover all trades doing work at the permitted site. It is REQUIRED that we have records of the subcontractors who actually did the trade specific work under the permit. Per Florida Statute 440 and Ordinance 89-6, a contractor shall require all subcontractors to provide evidence of workers' compensation or exemption, general liability insurance and a valid Certificate of Competency license in Columbia County.

Any changes, the permitted contractor is responsible for the corrected form being submitted to this office prior to the start of that subcontractor beginning any work. Violations will result in stop work orders and/or fines.

ELECTRICAL N/A	Print Name _____ License #:	Signature _____ Phone #:
MECHANICAL/ A/C N/A	Print Name _____ License #:	Signature _____ Phone #:
PLUMBING/ GAS N/A	Print Name _____ License #:	Signature _____ Phone #:
ROOFING	Print Name Robert W. May License #: (Owner Builder)	Signature _____ Phone #: 752-0347
SHEET METAL N/A	Print Name _____ License #:	Signature _____ Phone #:
FIRE SYSTEM/ SPRINKLER N/A	Print Name _____ License#:	Signature _____ Phone #:
SOLAR N/A	Print Name _____ License #:	Signature _____ Phone #:

Specialty License	License Number	Sub-Contractors Printed Name	Sub-Contractors Signature
MASON		Robert W. May Owner/Builder	
CONCRETE FINISHER			
FRAMING		Owner/Builder	
INSULATION	N/A		
STUCCO	N/A		
DRYWALL	N/A		
PLASTER	N/A		
CABINET INSTALLER	N/A		
PAINTING			
ACOUSTICAL CEILING			
GLASS			
CERAMIC TILE			
FLOOR COVERING			
ALUM/VINYL SIDING			
GARAGE DOOR			
METAL BLDG ERECTOR	N/A		

F. S. 440.103 Building permits; identification of minimum premium policy.--Every employer shall, as a condition to applying for and receiving a building permit, show proof and certify to the permit issuer that it has secured compensation for its employees under this chapter as provided in ss. 440.10 and 440.38, and shall be presented each time the employer applies for a building permit.

1010-17

John C. Hipp Construction
386-462-2047
P.O. BOX 1000
ALACHUA, FL 32616
FX: 386-462-4141
Virginia H. Johns, Pres.
Mary F. Hipp, Sec/Treas.
JULIO AMPARO, QC Manager
DOT Certified DI
Asphalt Pav
Drainа
Sewer and Wa
Concrete Curb & Gut
Certified Asphalt L
MOB: 352-494-342

October 2, 2010

Columbia County Building Department

Affidavit of Inspection

To whom it may Concern:

I, Julio Amparo observed the placement of the 24' X 26' concrete slab at the residence of Bob Mays. The concrete slab thickness was over four inches. The slab was placed according to all applicable building specs. Top soil removed. The slab was placed on a suitable compacted base, free of vegetation and foreign objects. Visqueen plastic was placed under the slab. Welded wire mesh was used to reinforce the concrete. Contraction joints were saw cut into slab.

I have over 15 years experience in construction testing and inspections. I am currently the quality control manager for a construction company in Alachua, Fl. I have also worked for Cal-Tech Testing and ASC Geosciences. I have FDOT certification and was certified with ACI certifications for concrete.

If you have any questions please do not hesitate to call me. (386) 365-4242 or (352) 494-3426

Sincerely,

Julio Amparo

Quality Control Manager

John C. Hipp Constructions Co.

COLUMBIA COUNTY BUILDING DEPARTMENT
135 NE Hernando Ave., Suite B-21
Lake City, FL 32055
Office: 386-758-1008 Fax: 386-758-2160

OWNER BUILDER DISCLOSURE STATEMENT

I understand that state law requires construction to be done by a licensed contractor and have applied for an owner-builder permit under an exemption from the law. The exemption specifies that I, as the owner of the property listed, may act as my own contractor with certain restrictions even though I do not have a license.

I understand that building permits are not required to be signed by a property owner unless he or she is responsible for the construction and is not hiring a licensed contractor to assume responsibility.

I understand that, as an owner-builder, I am the responsible party of record on a permit. I understand that I may protect myself from potential financial risk by hiring a licensed contractor and having the permit filed in his or her name instead of my own name. I also understand that a contractor is required by law to be licensed and bonded in Florida and to list his or her license numbers on permits and contracts.

I understand that I may build or improve a one-family or two-family residence or farm outbuilding. I may also build or improve a commercial building if the costs do not exceed $75,000. The building or residence must be for my own use or occupancy. It may not be built or substantially improved for sale or lease. If a building or residence that I have built or substantially improved myself is sold or leased with in 1 year after the construction is complete, the law will presume that I built or substantially improved it for sale or lease, which violates the exemption.

I understand that, as the owner-builder, I must provide direct, onsite supervision of the construction.

I understand that I may not hire an unlicensed person to act as my contractor or to supervise persons working on my building or residence. It is my responsibility to ensure that the persons whom I employ have the licenses required by law and by county or municipal ordinance.

I understand that it is frequent practice of unlicensed persons to have the property owner obtain an owner-builder permit that erroneously implies that the property owner is providing his or her own labor and materials. I, as an owner-builder, may be held liable and subjected to serious financial risk for any injuries sustained by an unlicensed person or his or her employees while working on my property. My homeowner's insurance may not provide coverage for those injuries. I am willfully acting as an owner-builder and am aware of the limits of my insurance coverage for injuries to workers on my property.

I understand that I may not delegate the responsibility for supervising work to a licensed contractor who is not licensed to perform the work being done. Any person working on my building who is not licensed must work under my direct supervision and must be employed by me, which means that I must comply with laws requiring the withholding of federal income tax and social security contributions under the Federal Insurance Contributions Act (FICA) and must provide workers' compensation for the employee. I understand that my failure to follow these laws may subject me to serious financial risk.

I agree that, as the party legally and financially responsible for this proposed construction activity, I will abide by all applicable laws and requirements that govern owner-builders as well as employers. I also understand that the construction must comply with all applicable laws, ordinances, building codes, and zoning regulations.

I understand that I may obtain more information regarding my obligations as an employer from the Internal Revenue Service, the United States Small Business Administration, the Florida Department of Financial Services, and the Florida Department of Revenue. I also understand that I may contact the Florida Construction Industry Licensing Board at 850-487-1395 or Internet website address http://www.myflorida.com/dbpr/pro/cilb/index.html for more information about licensed contractors.

I am aware of, and consent to, an owner-builder building permit applied for in my name and understand that I am the party legally and financially responsible for the proposed construction activity at the following address:

174 SW Dalmation Ln, Lake City, FL 32024.

I agree to notify Columbia County Building Department immediately of any additions, deletions, or changes to any of the information that I have provided on this disclosure. Licensed contractors are regulated by laws designed to protect the public. If you contract with a person who does not have a license, the Construction Industry Licensing Board and Department of Business and Professional Regulation may be unable to assist you with any financial loss that you sustain as a result of a complaint. Your only remedy against an unlicensed contractor may be in civil court. It is also important for you to understand that, if an unlicensed contractor or employee of an individual of firm is injured while working on your property, you may be held liable for damages. If you obtain an owner-builder permit and wish to hire a licensed contractor, you will be responsible for verifying whether the contractor is properly licensed and the status of the contractor's workers' compensation coverage.

I understand that if I hire subcontractors they must be licensed for that type of work in Columbia County, ex: framing, stucco, masonry, and state registered builders. Registered Contractors must have a minimum of $300,000.00 in General Liability insurance coverage and the proper workers' compensation. Specialty Contractors must have a minimum of $100,000.00 in General Liability insurance coverage and the proper workers' compensation coverage.

Before a building permit can be issued, this disclosure statement must be completed and signed by the property owner and returned to Columbia County Building Department.

TYPE OF CONSTRUCTION

( ) Single Family Dwelling ( ) Two-Family Residence ( ) Farm Outbuilding

(✓) Addition, Alteration, Modification or other Improvement

( ) Commercial, Cost of Construction_____ Construction of_____

( ) Other_____

I Robert W. May, have been advised of the above disclosure statement for exemption from contractor licensing as an owner/builder. I agree to comply with all requirements provided for in Florida Statutes allowing this exception for the construction permitted by Columbia County Building Permit.

Robert W. May 10/4/10

Owner Builder Signature Date

NOTARY OF OWNER BUILDER SIGNATURE

The above signer is personally known to me or produced identification _____

Notary Signature Gale Tedder Date 10/4/10 (Seal)

GALE TEDDER
MY COMMISSION # DD 805686
EXPIRES: July 14, 2012
Bonded Thru Notary Public Underwriters

FOR BUILDING DEPARTMENT USE ONLY

I hereby certify that the above listed owner builder has been given notice of the restriction stated above.

Building Official/Representative_____

Revised: 7-23-09
DISCLOSURE STATEMENT 09
Documents: B&Z Forms

Connection of Multiple Ply Beams

P1 **TOP LOADED BEAM – NAILED CONNECTION**
(See Connection Assemblies for more details)

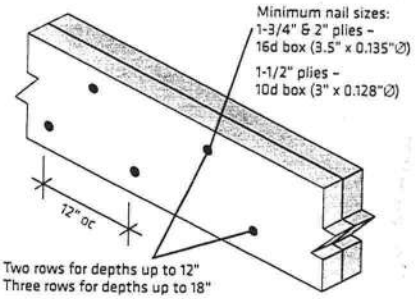

Two rows for depths up to 12"
Three rows for depths up to 18"

Framing is applied to top of the beam so that each ply carries an equal load

P2 **TOP LOADED BEAM – BOLTED CONNECTION**
(See Connection Assemblies for more details)

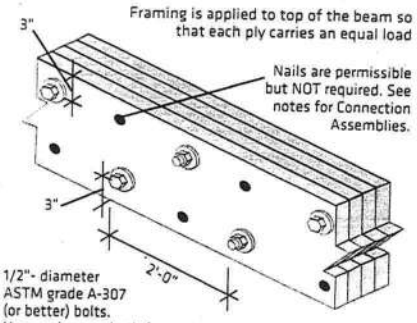

1/2"- diameter ASTM grade A-307 (or better) bolts.
Use washers on both faces.

Q3 **SIDE LOADED BEAM**
(See Connection Assemblies for more details)

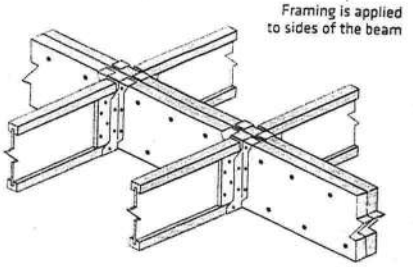

SIDE LOADS ARE NOT RECOMMENDED FOR BEAMS OVER 5-1/2" WIDE UNLESS EQUALLY APPLIED TO BOTH FACES
See Connection Assemblies for more information

DETAIL A	DETAIL B	DETAIL C/E	DETAIL D	DETAIL F	DETAIL G	DETAIL H
MAXIMUM 4" WIDE 2-PLY BEAMS	MAXIMUM 6" WIDE 3-PLY BEAMS	MAXIMUM 7-1/4" WIDE 2-PLY BEAMS	MAXIMUM 9-1/4" WIDE 3-PLY BEAMS	MAXIMUM 7" WIDE 3- OR 4-PLY BEAMS	MAXIMUM 7" WIDE 2-PLY BEAMS	MAXIMUM 7" WIDE 2-, 3- OR 4-PLY BEAMS
	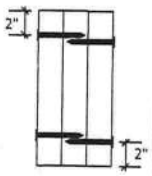	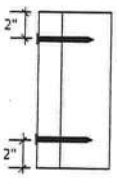	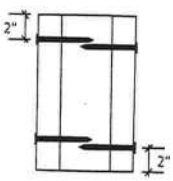	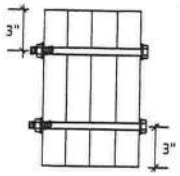	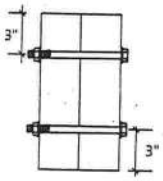	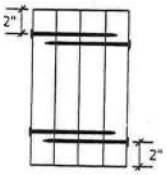
2" max. ply thickness	2" max. ply thickness	2" maximum side member 3-1/2" main member for C 5-1/4" main member for E	2" maximum side members 5-1/4" maximum main member			Simpson SDS 1/4" x 6" screws (or equal)

CONNECTION ASSEMBLIES

UNIFORM SIDE-LOAD CAPACITY (LBS)

Connection Detail	2 Rows of Nails at 12" oc	3 Rows of Nails at 12" oc	2 Rows of Bolts at 24" oc	2 Rows of Bolts at 12" oc
A	388	582	506	1012
B	291	437	380	760
C	291	437	522	1044
D	259	388	464	928
E	259	388	464	928
F	na	na	337	674
G	na	na	858	1716
H	Refer to Simpson Strong-Tie catalog for SDS capacities.			

NAIL SCHEDULE

Nail Length (in)	Nail Diameter (in)	Lateral Load Capacity (lbs)	Nail Size Factor	Nail Type
3-1/2"	0.162	126	1.30	16d common
	0.135	97	1.00	16d box
3-1/4"	0.148	99	1.02	16d sinker
	0.148	99	1.02	12d common
3"	0.148	92	0.95	10d common
	0.128	82	0.85	10d box
	0.120	77	0.79	10d sinker

NOTES:

1. Values are for standard load duration and shall be adjusted according to code.
2. Nailed values are based on 16d box (3-1/2" x 0.135"Ø) nails. For other sizes, multiply values by factor from nail schedule.
3. Nail and bolt capacities for connectors into the face, loaded perpendicular-to-grain are based on an equivalent specific gravity of: SG=0.50 (see Fastener Design on page 25).
4. For nails at 8" oc, multiply the capacity by 1.5. For nails at 6" oc multiply the capacity by 2. For four rows of nails, double the two-row capacity.
5. Use a minimum of 2 rows of nails for depths to 12", 3 rows of nails for depths greater than 12" up to 18" and 4 rows of nails for depths greater than 18", up to 24".
6. Unless specifically designed, use 16d (3-1/2") common or box nails for 1-3/4" thick plies and use 10d (3") common or box nails for 1-1/2" thick plies. If the nails do not fully penetrate the second ply (main member), then the nails shall be driven from both faces.
7. For detail **A**, or when attaching the first two plies for details **B** and **F** (optional), the nails may be driven all from one face or alternating from both faces. If the nails do not fully penetrate the second ply, then the nails shall be driven from both faces.
8. When driving nails from each face, alternate every other nail in each row.
9. For details **C** and **E**, when side-loaded, the larger side-load shall be applied to the thicker ply (main member).
10. For details **F** and **H**, it is permissible to nail the plies together before bolting or driving Simpson SDS (or equal) screws. Nail two plies together then nail one additional ply to each side.
11. Beams wider than 5-1/2" shall be top-loaded or side-loaded from both sides to prevent rotation. Consult a professional engineer for other options.
12. Other nail, screw or bolt configurations are possible. Refer to the Fastener Design table on page 25 or contact your LP® SolidStart® Engineered Wood Products distributor.

COLUMBIA COUNTY BUILDING DEPARTMENT
Received for FILE COPY
Compliance
PLANS EXAMINER

BOB MAY

Roof Plane Sheathing Area = 997 sq. ft

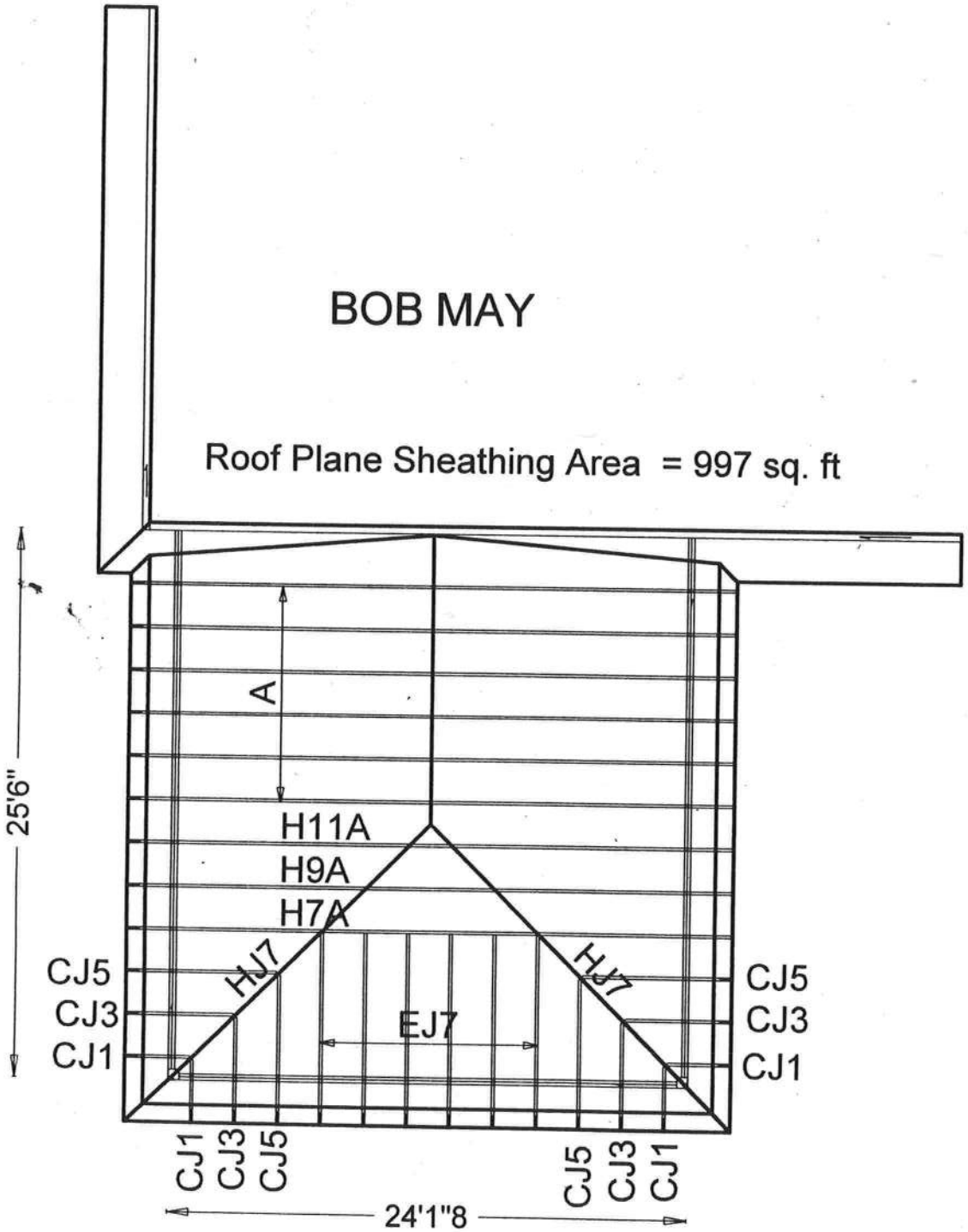

JOB DESCRIPTION:: Fill in later
/: BOB MAY

JOB NO:
10-188

PAGE NO:

Direct3D

View

Report

	Floor	Components
⊟ Floor: 1st Floor		
☑	1st Floor	Hangers
☑	1st Floor	Panels
☐	1st Floor	PanelSheathings
☑	1st Floor	Planes
☑	1st Floor	Plates
☑	1st Floor	Trusses
☑	1st Floor	Bearings

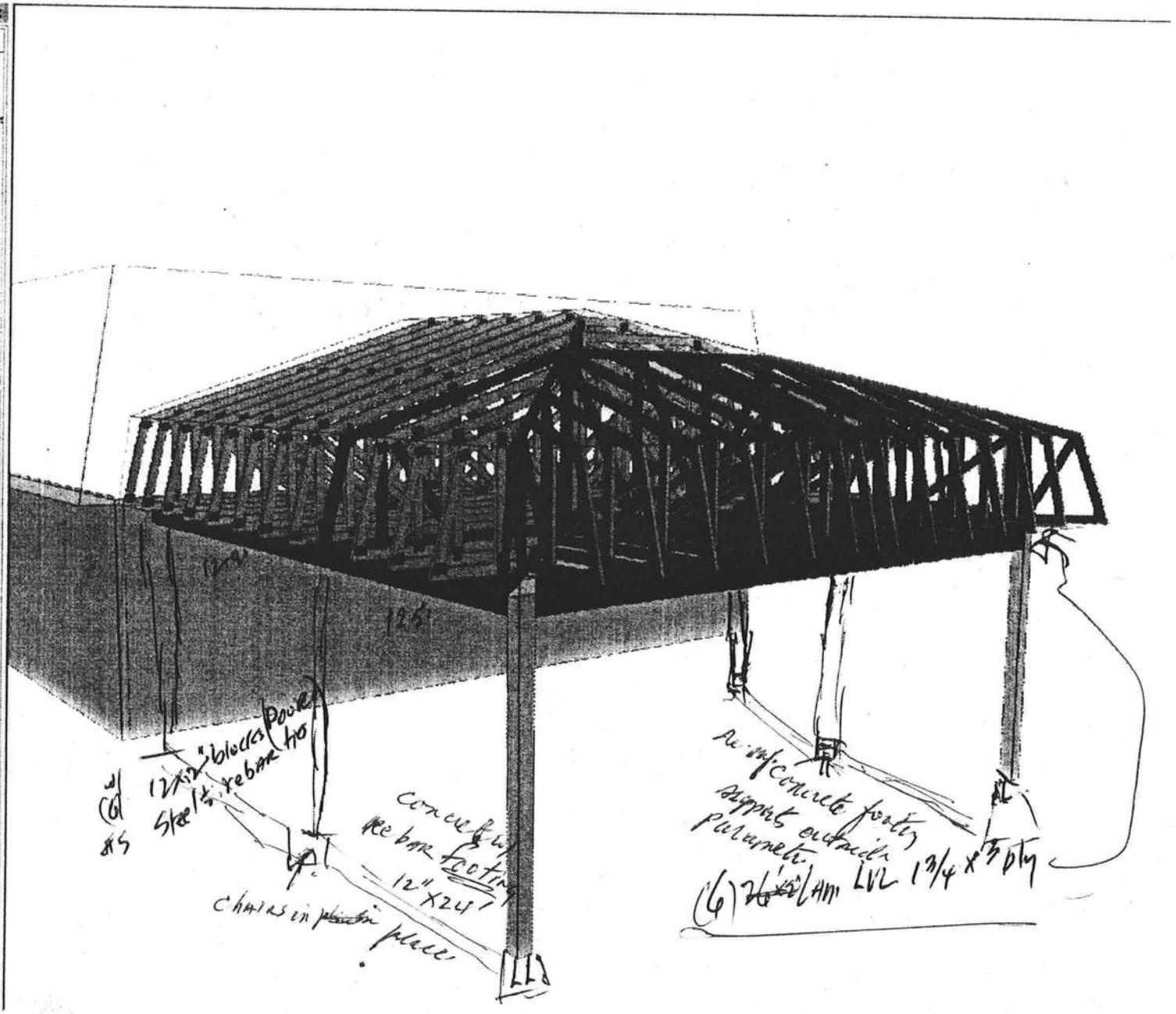

Properties Report

For Help, press F1

CAP NUM SCRL

8:51 AM
9/15/2010

Job:(10-188) -Fill in later BOB MAY / A

THIS DWG. PREPARED BY THE ALPINE JOB DESIGNER PROGRAM FROM TRUSS MFR'S LAYOUT

Top chord 2x4 SP #2 Dense
Bot chord 2x4 SP #2 Dense
Webs 2x4 SP #3

(A) Continuous lateral bracing equally spaced on member.

Deflection meets L/240 live and L/180 total load.

110 mph wind, 15.00 ft mean hgt, ASCE 7-05, CLOSED bldg, Located anywhere in roof, CAT II, EXP B, wind TC DL=5.0 psf, wind BC DL=5.0 psf. Iw=1.00 GCpi(+/-)=0.18

Wind reactions based on MWFRS pressures.

Bottom chord checked for 10.00 psf non-concurrent live load.

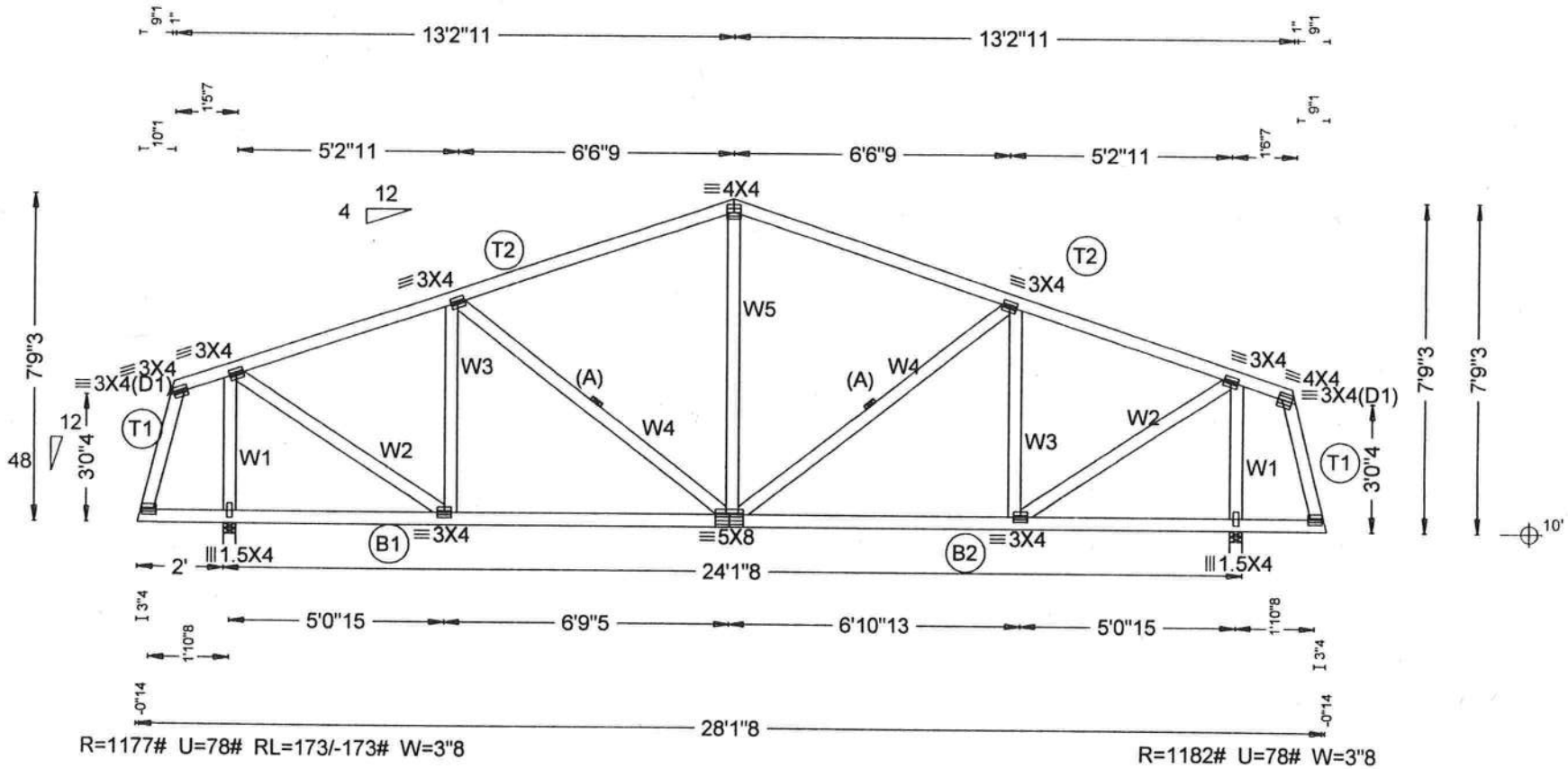

R=1177# U=78# RL=173/-173# W=3"8

R=1182# U=78# W=3"8

LEFT JIG = 3'3"12
DESC. = A
PLT. TYP.-WAVE

DESIGN CRIT=FBC2007COM/TPI-2002 FT/RT=10%(0%)/ 0(0)

QTY= 6 TOTAL= 6

REV. 9.05.03.0319.17

RIGHT JIG = 3'3"12
SEQ = 146430
SCALE =0.2500

WARNING! READ AND FOLLOW ALL NOTES ON THIS DRAWING!
IMPORTANT FURNISH THIS DRAWING TO ALL CONTRACTORS INCLUDING THE INSTALLERS.

Trusses require extreme care in fabricating, handling, shipping, installing and bracing. Refer to and follow the latest edition of BCSI (Building Component Safety Information, by TPI and WTCA) for safety practices prior to performing these functions. Installers shall provide temporary bracing per BCSI. Unless noted otherwise, top chord shall have properly attached structural sheathing and bottom chord shall have a properly attached rigid ceiling. Locations shown for permanent lateral restraint of webs shall have bracing installed per BCSI sections B3, B7 or B10, as applicable. Apply plates to each face of truss and position as shown above and on the Joint Details, unless noted otherwise. Refer to drawings 160A-Z for standard plate positions.
ITW Building Components Group Inc. shall not be responsible for any deviation from this drawing, any failure to build the truss in conformance with ANSI/TPI 1, or for handling, shipping, installation & bracing of trusses.
A seal on this drawing or cover page listing this drawing, indicates acceptance of professional engineering responsibility solely for the design shown. The suitability and use of this drawing for any structure is the responsibility of the Building Designer per ANSI/TPI 1 Sec.2.
For more information see this job's general notes page and these web sites:
ITWBCG: www.itwbcg.com, TPI: www.tpinst.org, WTCA: www.sbcindustry.com, ICC: www.iccsafe.org

TC LL	20.0psf	REF	
TC DL	10.0psf	DATE	09-16-2010
BC DL	10.0psf	DRWG	
BC LL	0.0psf		
TOT.LD.	40.0psf	O/A LEN.	280108
DUR.FAC.	1.25	JOB #:	10-188
SPACING	24.0"	TYPE	COMN

Job:(10-188) -Fill in later BOB MAY / H11A

THIS DWG. PREPARED BY THE ALPINE JOB DESIGNER PROGRAM FROM TRUSS MFR'S LAYOUT

Top chord 2x4 SP #2 Dense
Bot chord 2x4 SP #2 Dense
Webs 2x4 SP #3

In lieu of structural panels use purlins to brace all flat TC @ 24" OC.

Deflection meets L/240 live and L/180 total load.

110 mph wind, 15.00 ft mean hgt, ASCE 7-05, CLOSED bldg, not located within 4.50 ft from roof edge, CAT II, EXP B, wind TC DL=5.0 psf, wind BC DL=5.0 psf, Iw=1.00 GCpi(+/-)=0.18

Wind reactions based on MWFRS pressures.

Bottom chord checked for 10.00 psf non-concurrent live load.

MWFRS loads based on trusses located at least 7.50 ft. from roof edge.

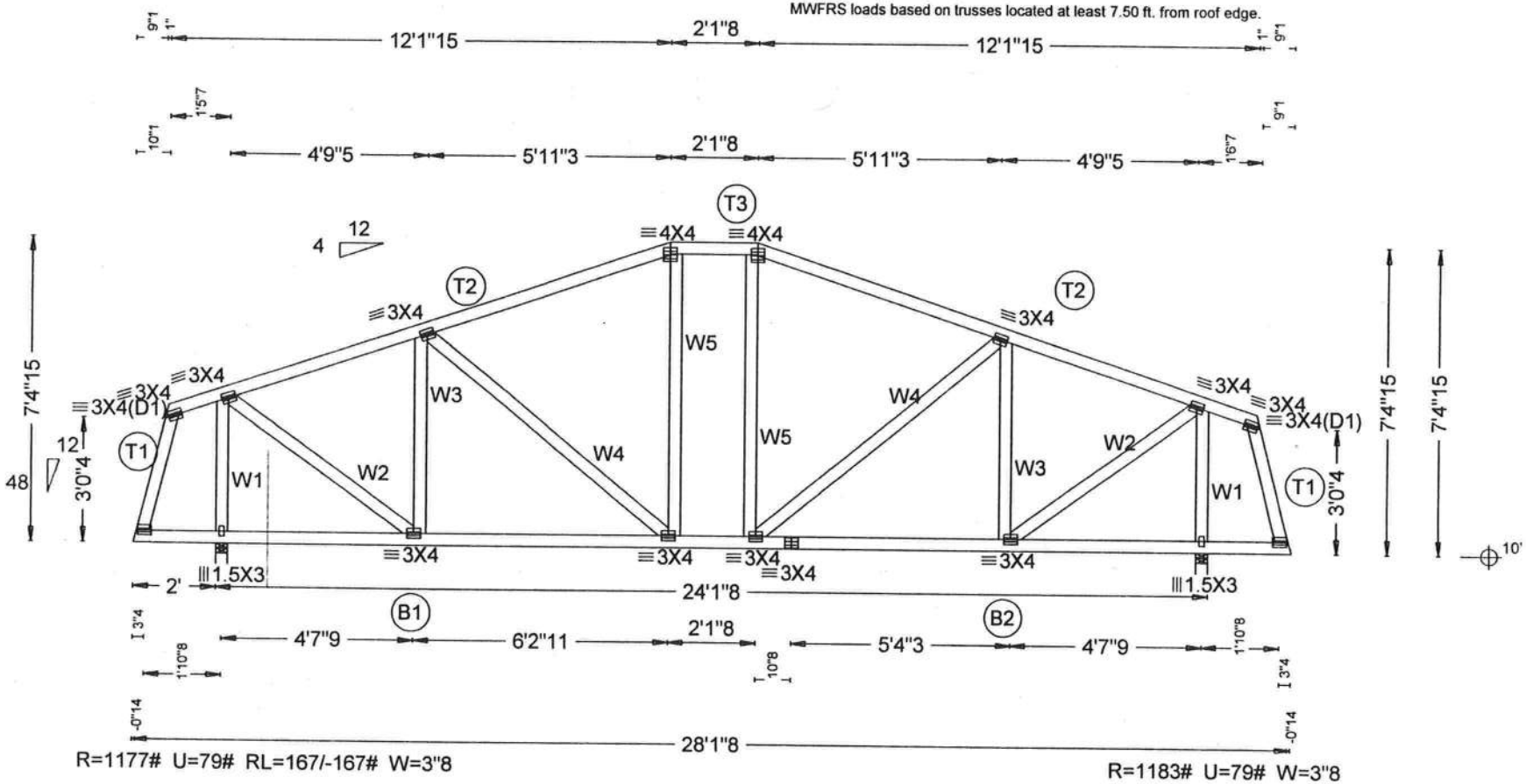

R=1177# U=79# RL=167/-167# W=3"8

R=1183# U=79# W=3"8

LEFT JIG = 3'3"12
DESC. = H11A
PLT. TYP.-WAVE

DESIGN CRIT=FBC2007COM/TPI-2002 FT/RT=10%(0%)/ 0(0)

QTY= 1 TOTAL= 1

REV. 9.05.03.0319.17

RIGHT JIG = 3'3"12
SEQ = 146425
SCALE =0.2500

WARNING! READ AND FOLLOW ALL NOTES ON THIS DRAWING!
IMPORTANT FURNISH THIS DRAWING TO ALL CONTRACTORS INCLUDING THE INSTALLERS.

Trusses require extreme care in fabricating, handling, shipping, installing and bracing. Refer to and follow the latest edition of BCSI (Building Component Safety Information, by TPI and WTCA) for safety practices prior to performing these functions. Installers shall provide temporary bracing per BCSI. Unless noted otherwise, top chord shall have properly attached structural sheathing and bottom chord shall have a properly attached rigid ceiling. Locations shown for permanent lateral restraint of webs shall have bracing installed per BCSI sections B3, B7 or B10, as applicable. Apply plates to each face of truss and position as shown above and on the Joint Details, unless noted otherwise. Refer to drawings 160A-Z for standard plate positions.
ITW Building Components Group Inc. shall not be responsible for any deviation from this drawing, any failure to build the truss in conformance with ANSI/TPI 1, or for handling, shipping, installation & bracing of trusses.
A seal on this drawing or cover page listing this drawing, indicates acceptance of professional engineering responsibility solely for the design shown. The suitability and use of this drawing for any structure is the responsibility of the Building Designer per ANSI/TPI 1 Sec.2.
For more information see this job's general notes page and these web sites
ITWBCG: www.itwbcg.com, TPI: www.tpinst.org, WTCA: www.sbcindustry.com, ICC: www.iccsafe.org

TC LL	20.0psf	REF	
TC DL	10.0psf	DATE	09-16-2010
BC DL	10.0psf	DRWG	
BC LL	0.0psf		
TOT.LD.	40.0psf	O/A LEN.	280108
DUR.FAC.	1.25	JOB #:	10-188
SPACING	24.0"	TYPE	SPEC

Job:(10-188) -Fill in later BOB MAY / H9A

THIS DWG. PREPARED BY THE ALPINE JOB DESIGNER PROGRAM FROM TRUSS MFR'S LAYOUT

Top chord 2x4 SP #2 Dense
Bot chord 2x4 SP #2 Dense
Webs 2x4 SP #3

(A) Continuous lateral bracing equally spaced on member.

Bottom chord checked for 10.00 psf non-concurrent live load.

MWFRS loads based on trusses located at least 7.50 ft. from roof edge.

110 mph wind, 15.00 ft mean hgt, ASCE 7-05, CLOSED bldg, not located within 4.50 ft from roof edge, CAT II, EXP B, wind TC DL=5.0 psf, wind BC DL=5.0 psf. Iw=1.00 GCpi(+/-)=0.18

Wind reactions based on MWFRS pressures.

In lieu of structural panels use purlins to brace all flat TC @ 24" OC.

Deflection meets L/240 live and L/180 total load.

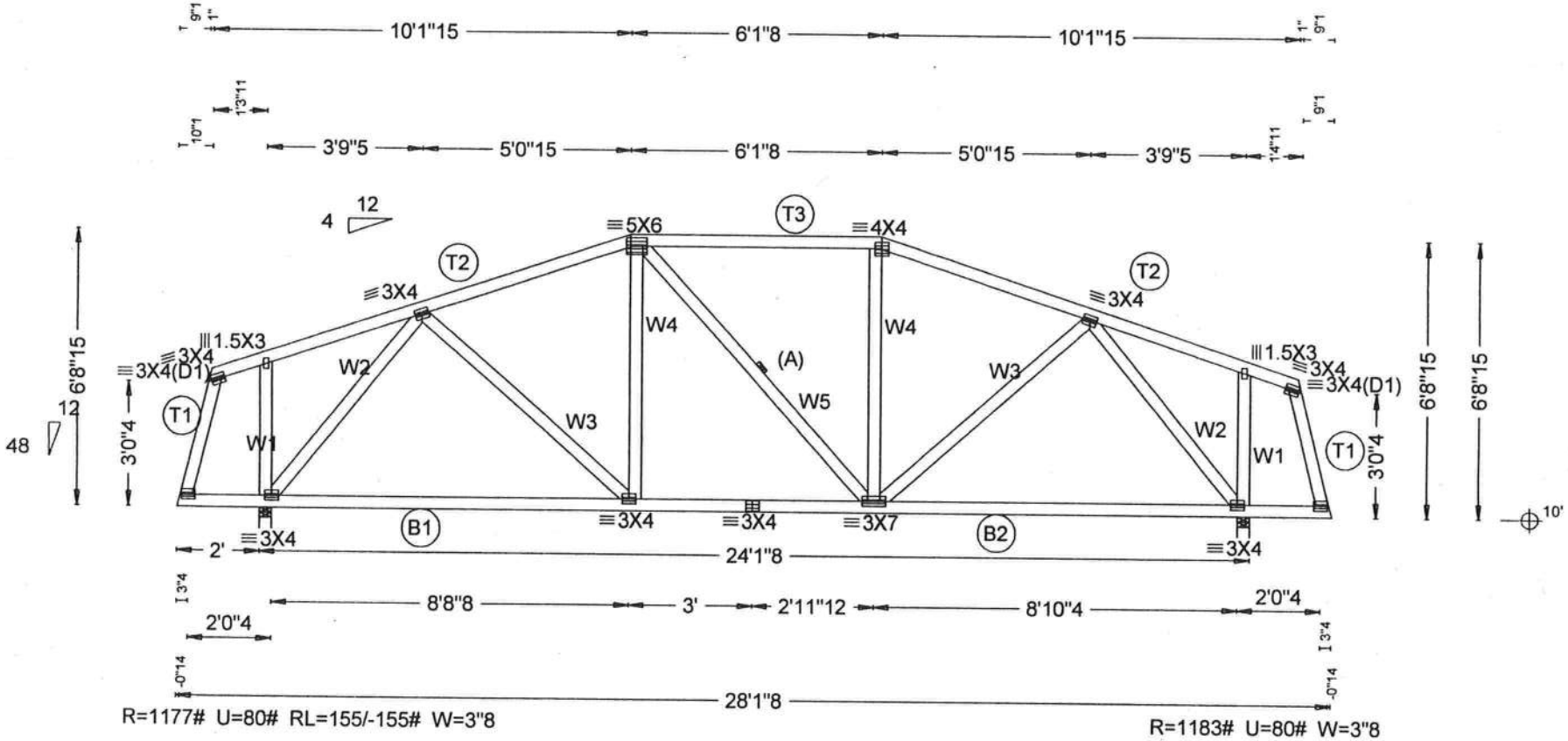

LEFT JIG = 3'3"12
DESC. = H9A
PLT. TYP.-WAVE

DESIGN CRIT=FBC2007COM/TPI-2002 FT/RT=10%(0%)/ 0(0)

QTY= 1 TOTAL= 1

RIGHT JIG = 3'3"12
SEQ = 146422
SCALE =0.2500

REV. 9.05.03.0319.17

WARNING! READ AND FOLLOW ALL NOTES ON THIS DRAWING!
IMPORTANT FURNISH THIS DRAWING TO ALL CONTRACTORS INCLUDING THE INSTALLERS.

Trusses require extreme care in fabricating, handling, shipping, installing and bracing. Refer to and follow the latest edition of BCSI (Building Component Safety Information, by TPI and WTCA) for safety practices prior to performing these functions. Installers shall provide temporary bracing per BCSI. Unless noted otherwise, top chord shall have properly attached structural sheathing and bottom chord shall have a properly attached rigid ceiling. Locations shown for permanent lateral restraint of webs shall have bracing installed per BCSI sections B3, B7 or B10, as applicable. Apply plates to each face of truss and position as shown above and on the Joint Details, unless noted otherwise. Refer to drawings 160A-Z for standard plate positions.

ITW Building Components Group Inc. shall not be responsible for any deviation from this drawing, any failure to build the truss in conformance with ANSI/TPI 1, or for handling, shipping, installation & bracing of trusses.

A seal on this drawing or cover page listing this drawing, indicates acceptance of professional engineering responsibility solely for the design shown. The suitability and use of this drawing for any structure is the responsibility of the Building Designer per ANSI/TPI 1 Sec.2.

For more information see this job's general notes page and these web sites:
ITWBCG www.itwbcg.com, TPI www.tpinst.org, WTCA www.sbcindustry.com, ICC www.iccsafe.org

TC LL	20.0psf	REF	
TC DL	10.0psf	DATE	09-16-2010
BC DL	10.0psf	DRWG	
BC LL	0.0psf		
TOT.LD.	40.0psf	O/A LEN.	280108
DUR.FAC.	1.25	JOB #:	10-188
SPACING	24.0"	TYPE	SPEC

Job:(10-188) -Fill in later BOB MAY / H7A

THIS DWG PREPARED FROM COMPUTER INPUT (LOADS & DIMENSIONS)SUBMITTED BY TRUSS MFR

Top chord 2x4 SP #2 Dense
Bot chord 2x4 SP #2 Dense
Webs 2x4 SP #3

In lieu of structural panels use purlins to brace all flat TC @ 24" OC.

#1 hip supports 9-0-0 jacks W/2 panel TC and no end vert.

Deflection meets L/240 live and L/180 total load.

Trusses or components connecting to this girder have been modified by the truss designer. The loading for this girder requires verification for accuracy.

110 mph wind, 15.00 ft mean hgt, ASCE 7-05, CLOSED bldg, not located within 4.50 ft from roof edge, CAT II, EXP B, wind TC DL=5.0 psf, wind BC DL=5.0 psf. Iw=1.00 GCpi(+/-)=0.18

Wind reactions based on MWFRS pressures.

Left side jacks have 9-0-0 setback with 2-0-0 cant and 0-0-0 overhang. End jacks have 9-0-0 setback with 2-0-0 cant and 0-0-0 overhang. Right side jacks have 9-0-0 setback with 2-0-0 cant and 0-0-0 overhang.

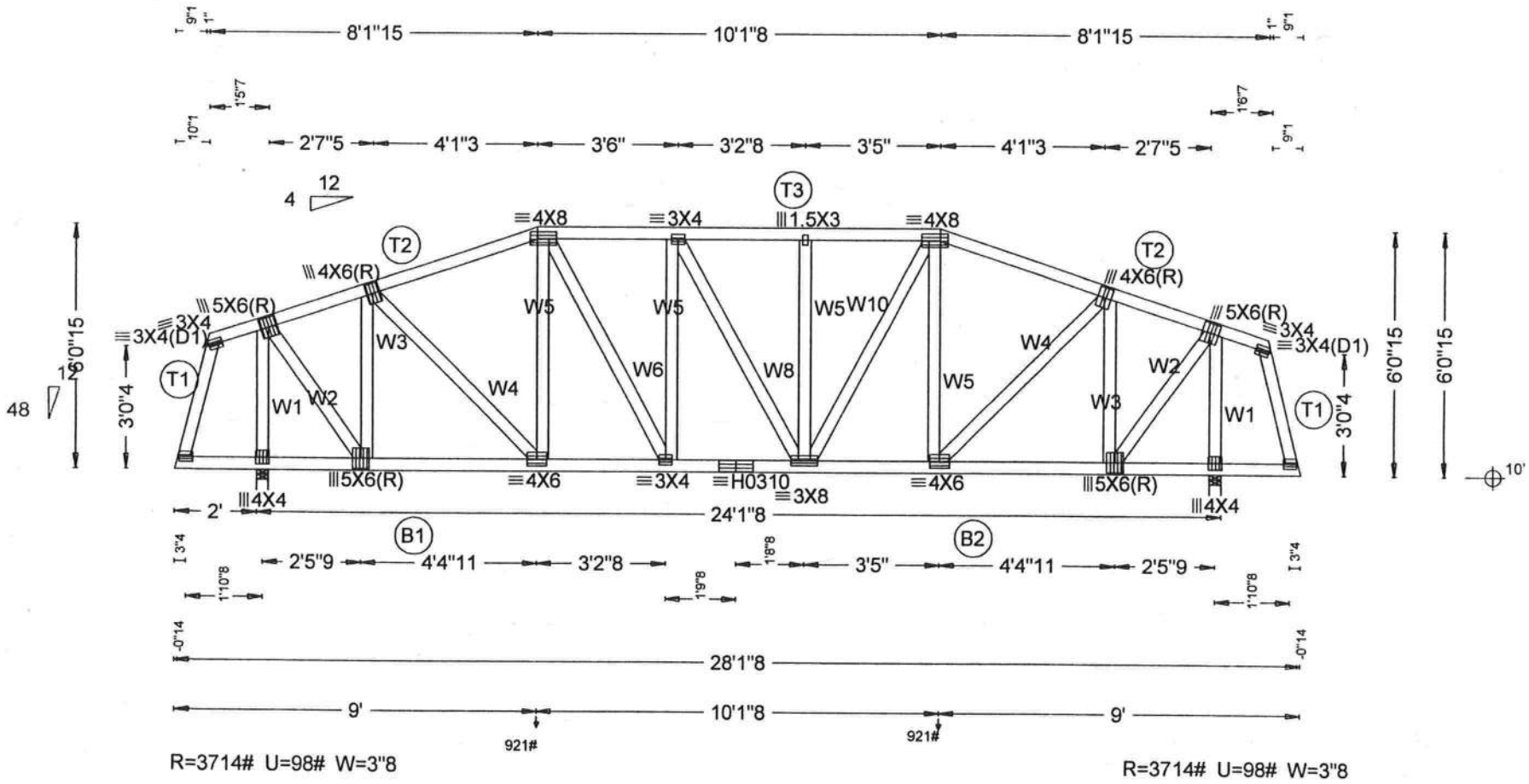

R=3714# U=98# W=3"8

R=3714# U=98# W=3"8

LEFT JIG = 3'3"12
DESC. = H7A
PLT. TYP.-WAVE

DESIGN CRIT=FBC2007COM/TPI-2002 FT/RT=10%(0%)/ 0(0)

QTY= 1 TOTAL= 1

REV. 9.05.03.0319.17

RIGHT JIG = 3'3"12
SEQ = 146417
SCALE =0.2500

WARNING! READ AND FOLLOW ALL NOTES ON THIS DRAWING!
IMPORTANT FURNISH THIS DRAWING TO ALL CONTRACTORS INCLUDING THE INSTALLERS.

Trusses require extreme care in fabricating, handling, shipping, installing and bracing. Refer to and follow the latest edition of BCSI (Building Component Safety Information, by TPI and WTCA) for safety practices prior to performing these functions. Installers shall provide temporary bracing per BCSI. Unless noted otherwise, top chord shall have properly attached structural sheathing and bottom chord shall have a properly attached rigid ceiling. Locations shown for permanent lateral restraint of webs shall have bracing installed per BCSI sections B3, B7 or B10, as applicable. Apply plates to each face of truss and position as shown above and on the Joint Details, unless noted otherwise. Refer to drawings 160A-Z for standard plate positions.

ITW Building Components Group Inc. shall not be responsible for any deviation from this drawing, any failure to build the truss in conformance with ANSI/TPI 1, or for handling, shipping, installation & bracing of trusses.

A seal on this drawing or cover page listing this drawing, indicates acceptance of professional engineering responsibility solely for the design shown. The suitability and use of this drawing for any structure is the responsibility of the Building Designer per ANSI/TPI 1 Sec.2.

For more information see this job's general notes page and these web sites.
ITWBCG. www.itwbcg.com, TPI. www.tpinst.org, WTCA. www.sbcindustry.com, ICC. www.iccsafe.org

TC LL	20.0psf	REF	
TC DL	10.0psf	DATE	09-16-2010
BC DL	10.0psf	DRWG	
BC LL	0.0psf		
TOT.LD.	40.0psf	O/A LEN.	280108
DUR.FAC.	1.25	JOB #:	10-188
SPACING	24.0"	TYPE	SPEC

Job:(10-188) -Fill in later BOB MAY / CJ1

THIS DWG. PREPARED BY THE ALPINE JOB DESIGNER PROGRAM FROM TRUSS MFR'S LAYOUT

Top chord 2x4 SP #2 Dense
Bot chord 2x4 SP #2 Dense
Webs 2x4 SP #3

Calculated horizontal deflection is 0.20" due to live load and 0.13" due to dead load.

Bottom chord checked for 10.00 psf non-concurrent live load.

Negative reaction(s) of -186# MAX. (See below) from a non-wind load case requires uplift connection.

110 mph wind, 15.00 ft mean hgt, ASCE 7-05, CLOSED bldg. Located anywhere in roof, CAT II, EXP B, wind TC DL=5.0 psf, wind BC DL=5.0 psf. Iw=1.00 GCpi(+/-)=0.18

Wind reactions based on MWFRS pressures.

Deflection meets L/240 live and L/180 total load.

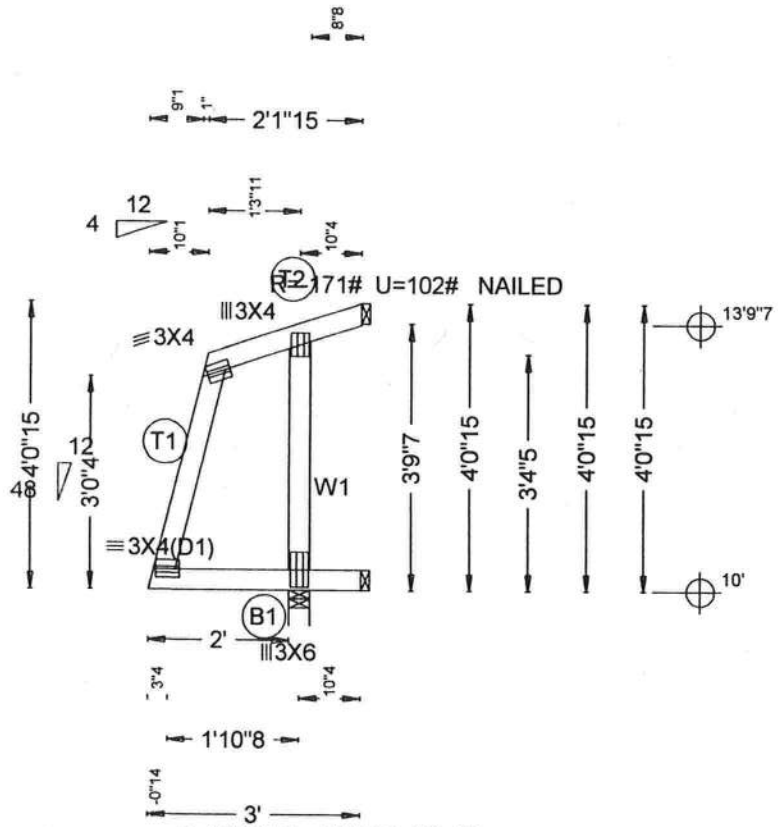

LEFT JIG = 3'3"12
DESC. = CJ1
PLT. TYP.-WAVE

DESIGN CRIT=FBC2007COM/TPI-2002 FT/RT=10%(0%)/ 0(0)

QTY= 4 TOTAL= 4

REV. 9.05.03.0319.17

RIGHT JIG = 3'9"3
SEQ = 146433
SCALE =0.3750

WARNING! READ AND FOLLOW ALL NOTES ON THIS DRAWING!
IMPORTANT FURNISH THIS DRAWING TO ALL CONTRACTORS INCLUDING THE INSTALLERS.

Trusses require extreme care in fabricating, handling, shipping, installing and bracing. Refer to and follow the latest edition of BCSI (Building Component Safety Information, by TPI and WTCA) for safety practices prior to performing these functions. Installers shall provide temporary bracing per BCSI. Unless noted otherwise, top chord shall have properly attached structural sheathing and bottom chord shall have a properly attached rigid ceiling. Locations shown for permanent lateral restraint of webs shall have bracing installed per BCSI sections B3, B7 or B10, as applicable. Apply plates to each face of truss and position as shown above and on the Joint Details, unless noted otherwise. Refer to drawings 160A-Z for standard plate positions.
ITW Building Components Group Inc. shall not be responsible for any deviation from this drawing, any failure to build the truss in conformance with ANSI/TPI 1, or for handling, shipping, installation & bracing of trusses.
A seal on this drawing or cover page listing this drawing, indicates acceptance of professional engineering responsibility solely for the design shown. The suitability and use of this drawing for any structure is the responsibility of the Building Designer per ANSI/TPI 1 Sec.2.
For more information see this job's general notes page and these web sites:
ITWBCG www.itwbcg.com, TPI. www.tpinst.org WTCA: www.sbcindustry.com; ICC. www.iccsafe.org

TC LL	20.0psf	REF	
TC DL	10.0psf	DATE	09-16-2010
BC DL	10.0psf	DRWG	
BC LL	0.0psf		
TOT.LD.	40.0psf	O/A LEN.	3
DUR.FAC.	1.25	JOB #:	10-188
SPACING	24.0"	TYPE	JACK

Job:(10-188) -Fill in later BOB MAY / CJ3

THIS DWG. PREPARED BY THE ALPINE JOB DESIGNER PROGRAM FROM TRUSS MFR'S LAYOUT

Top chord 2x4 SP #2 Dense
Bot chord 2x4 SP #2 Dense
Webs 2x4 SP #3

Calculated horizontal deflection is 0.30" due to live load and 0.20" due to dead load.

Deflection meets L/240 live and L/180 total load.

110 mph wind, 15.00 ft mean hgt, ASCE 7-05, CLOSED bldg, not located within 4.50 ft from roof edge, CAT II, EXP B, wind TC DL=5.0 psf, wind BC DL=5.0 psf. Iw=1.00 GCpi(+/-)=0.18

Wind reactions based on MWFRS pressures.

Bottom chord checked for 10.00 psf non-concurrent live load.

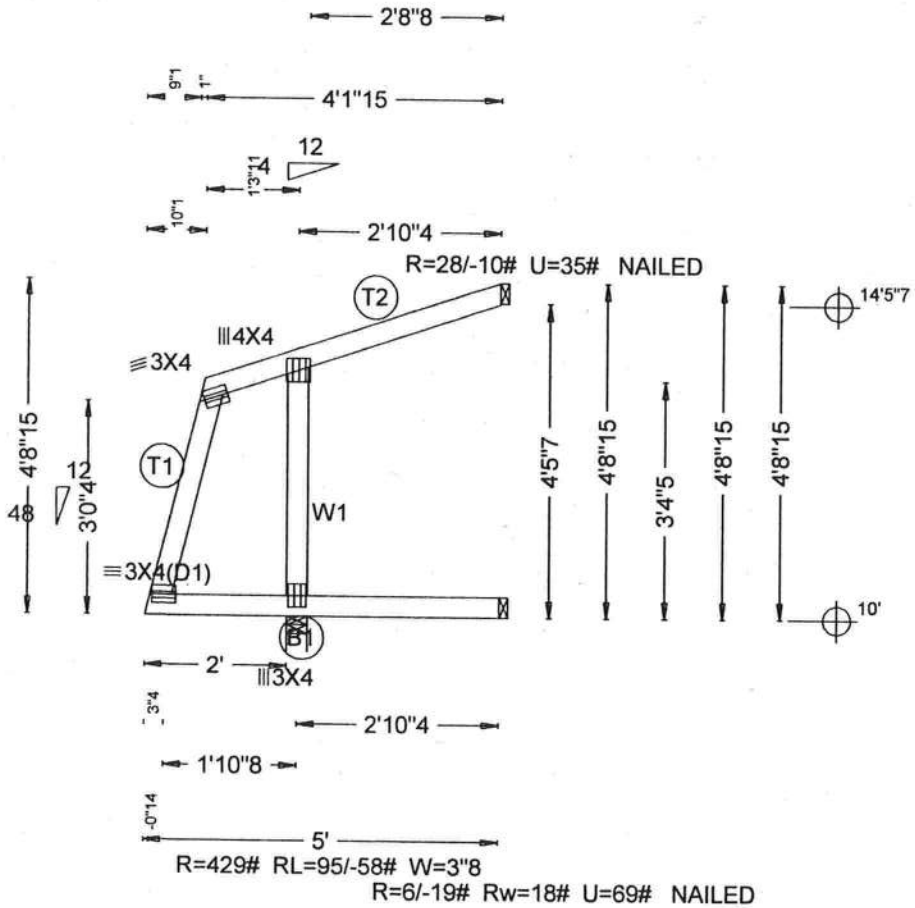

LEFT JIG = 3'3"12
DESC. = CJ3
PLT. TYP.-WAVE

DESIGN CRIT=FBC2007/COM/TPI-2002 FT/RT=10%(0%)/ 0(0)

QTY= 4 TOTAL= 4

REV. 9.05.03.0319.17

RIGHT JIG = 5'2"8
SEQ = 146436
SCALE =0.3750

WARNING! READ AND FOLLOW ALL NOTES ON THIS DRAWING!
IMPORTANT FURNISH THIS DRAWING TO ALL CONTRACTORS INCLUDING TO THE INSTALLERS.

Trusses require extreme care in fabricating, handling, shipping, installing and bracing. Refer to and follow the latest edition of BCSI (Building Component Safety Information, by TPI and WTCA) for safety practices prior to performing these functions. Installers shall provide temporary bracing per BCSI. Unless noted otherwise, top chord shall have properly attached structural sheathing and bottom chord shall have a properly attached rigid ceiling. Locations shown for permanent lateral restraint of webs shall have bracing installed per BCSI sections B3, B7 or B10, as applicable. Apply plates to each face of truss and position as shown above and on the Joint Details, unless noted otherwise. Refer to drawings 160A-Z for standard plate positions.
ITW Building Components Group Inc. shall not be responsible for any deviation from this drawing, any failure to build the truss in conformance with ANSI/TPI 1, or for handling, shipping, installation & bracing of trusses.
A seal on this drawing or cover page listing this drawing, indicates acceptance of professional engineering responsibility solely for the design shown. The suitability and use of this drawing for any structure is the responsibility of the Building Designer per ANSI/TPI 1 Sec.2.
For more information see this job's general notes page and these web sites.
ITWBCG: www.itwbcg.com, TPI: www.tpinst.org, WTCA: www.sbcindustry.com, ICC: www.iccsafe.org

TC LL	20.0psf	REF	
TC DL	10.0psf	DATE	09-16-2010
BC DL	10.0psf	DRWG	
BC LL	0.0psf		
TOT.LD.	40.0psf	O/A LEN.	5
DUR.FAC.	1.25	JOB #:	10-188
SPACING	24.0"	TYPE	JACK

Job:(10-188) -Fill in later BOB MAY / CJ5

THIS DWG PREPARED BY THE ALPINE JOB DESIGNER PROGRAM FROM TRUSS MFR'S LAYOUT

Top chord 2x4 SP #2 Dense
Bot chord 2x4 SP #2 Dense
Webs 2x4 SP #2 Dense

Calculated horizontal deflection is 0.39" due to live load and 0.26" due to dead load.

Bottom chord checked for 10.00 psf non-concurrent live load.

110 mph wind, 15.00 ft mean hgt, ASCE 7-05, CLOSED bldg, not located within 4.50 ft from roof edge, CAT II, EXP B, wind TC DL=5.0 psf, wind BC DL=5.0 psf. Iw=1.00 GCpi(+/-)=0.18

Wind reactions based on MWFRS pressures.

Truss passed check for 20 psf additional bottom chord live load in areas with 42"-high x 24"-wide clearance.

Deflection meets L/240 live and L/180 total load.

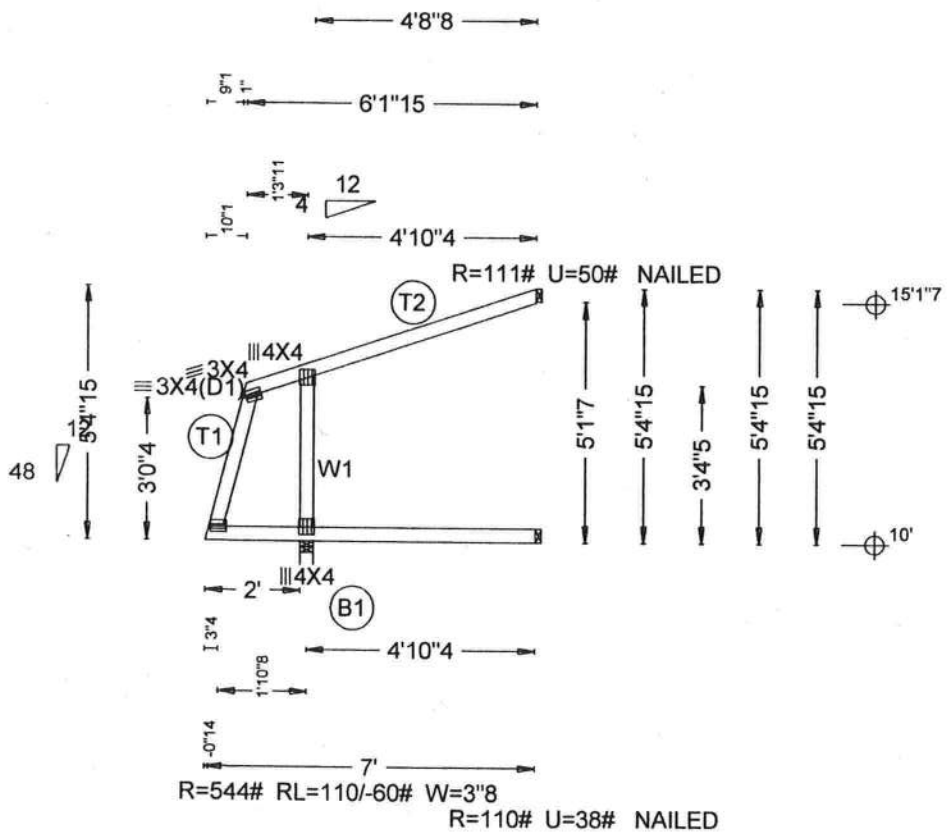

LEFT JIG = 3'3"12
DESC. = CJ5
PLT. TYP.-WAVE

DESIGN CRIT=FBC2007COM/TPI-2002 FT/RT=10%(0%)/ 0(0)

QTY= 4 TOTAL= 4

REV. 9.05.03.0319.17

RIGHT JIG = 6'11"4
SEQ = 146439
SCALE =0.2500

WARNING! READ AND FOLLOW ALL NOTES ON THIS DRAWING!
IMPORTANT FURNISH THIS DRAWING TO ALL CONTRACTORS INCLUDING THE INSTALLERS.

Trusses require extreme care in fabricating, handling, shipping, installing and bracing. Refer to and follow the latest edition of BCSI (Building Component Safety Information, by TPI and WTCA) for safety practices prior to performing these functions. Installers shall provide temporary bracing per BCSI. Unless noted otherwise, top chord shall have properly attached structural sheathing and bottom chord shall have a properly attached rigid ceiling. Locations shown for permanent lateral restraint of webs shall have bracing installed per BCSI sections B3, B7 or B10, as applicable. Apply plates to each face of truss and position as shown above and on the Joint Details, unless noted otherwise. Refer to drawings 160A-Z for standard plate positions.
ITW Building Components Group Inc. shall not be responsible for any deviation from this drawing, any failure to build the truss in conformance with ANSI/TPI 1, or for handling, shipping, installation & bracing of trusses.
A seal on this drawing or cover page listing this drawing, indicates acceptance of professional engineering responsibility solely for the design shown. The suitability and use of this drawing for any structure is the responsibility of the Building Designer per ANSI/TPI 1 Sec.2.
For more information see this job's general notes page and these web sites:
ITWBCG: www.itwbcg.com, TPI: www.tpinst.org, WTCA: www.sbcindustry.com; ICC: www.iccsafe.org

TC LL	20.0psf	REF	
TC DL	10.0psf	DATE	09-16-2010
BC DL	10.0psf	DRWG	
BC LL	0.0psf		
TOT.LD.	40.0psf	O/A LEN.	7
DUR.FAC.	1.25	JOB #:	10-188
SPACING	24.0"	TYPE	JACK

Job:(10-188) -Fill in later BOB MAY / HJ7

THIS DWG. PREPARED BY THE ALPINE JOB DESIGNER PROGRAM FROM TRUSS MFR'S LAYOUT

Top chord 2x4 SP #2 Dense
Bot chord 2x4 SP #2 Dense
Webs 2x4 SP #3

The following members need concentrated loads at the heel: 5-0-0 span/setback member on the 2-0-0 cant side requires 92 lbs and the 5-0-0 span/setback member on the 2-0-0 cant side requires 92 lbs.

Hipjack supports 9-0-0 setback jacks with 2-0-0 cantilever one face, 2-10-0 cantilever opposite face.

110 mph wind, 15.00 ft mean hgt, ASCE 7-05, CLOSED bldg, not located within 4.50 ft from roof edge, CAT II, EXP B, wind TC DL=5.0 psf, wind BC DL=5.0 psf. Iw=1.00 GCpi(+/-)=0.18

Wind reactions based on MWFRS pressures.

Sub-fascia beam assumptions: 5-0-0 sub-fascia beam on the 2-0-0 cantilever side. 5-0-0 sub-fascia beam on the 2-0-0 cantilever side.

Deflection meets L/240 live and L/180 total load.

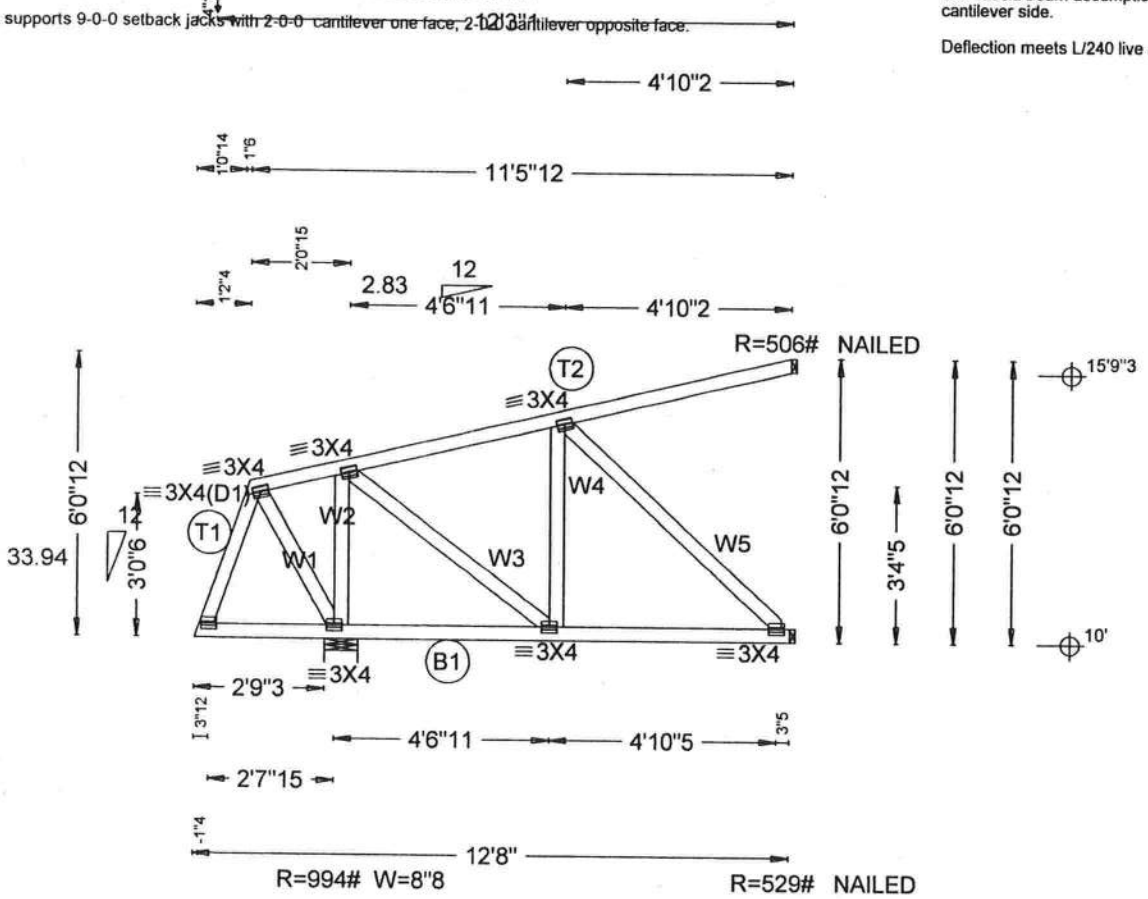

LEFT JIG = 3'5"
DESC. = HJ7
PLT. TYP -WAVE

DESIGN CRIT=FBC2007COM/TPI-2002 FT/RT=10%(0%)/ 0(0)

QTY= 2 TOTAL= 2

RIGHT JIG = 11'11"13
SEQ = 146445
SCALE =0.2500

REV. 9.05.03.0319.17

WARNING! READ AND FOLLOW ALL NOTES ON THIS DRAWING!
IMPORTANT FURNISH THIS DRAWING TO ALL CONTRACTORS INCLUDING THE INSTALLERS.

Trusses require extreme care in fabricating, handling, shipping, installing and bracing. Refer to and follow the latest edition of BCSI (Building Component Safety Information, by TPI and WTCA) for safety practices prior to performing these functions. Installers shall provide temporary bracing per BCSI. Unless noted otherwise, top chord shall have properly attached structural sheathing and bottom chord shall have a properly attached rigid ceiling. Locations shown for permanent lateral restraint of webs shall have bracing installed per BCSI sections B3, B7 or B10, as applicable. Apply plates to each face of truss and position as shown above and on the Joint Details, unless noted otherwise. Refer to drawings 160A-Z for standard plate positions.
ITW Building Components Group Inc. shall not be responsible for any deviation from this drawing, any failure to build the truss in conformance with ANSI/TPI 1, or for handling, shipping, installation & bracing of trusses.
A seal on this drawing or cover page listing this drawing, indicates acceptance of professional engineering responsibility solely for the design shown. The suitability and use of this drawing for any structure is the responsibility of the Building Designer per ANSI/TPI 1 Sec.2.
For more information see this job's general notes page and these web sites:
ITWBCG. www.itwbcg.com, TPI. www.tpinst.org, WTCA. www.sbcindustry.com, ICC: www.iccsafe.org

TC LL	20.0psf	REF	
TC DL	10.0psf	DATE	09-16-2010
BC DL	10.0psf	DRWG	
BC LL	0.0psf		
TOT.LD.	40.0psf	O/A LEN.	120812
DUR.FAC.	1.25	JOB #:	10-188
SPACING	24.0"	TYPE	HIP_JACK

ITW Building Components Group, Inc.

1950 Marley Drive Haines City, FL 33844
Florida Engineering Certificate of Authorization Number: 0 278
Florida Certificate of Product Approval # FL1999
 Document ID:1U5A487-Z0317141840

Truss Fabricator: Anderson Truss Company
Job Identification: 10-188--Fill in later BOB MAY -- , **
Truss Count: 9
Model Code: Florida Building Code 2007 and 2009 Supplement
Truss Criteria: FBC2007Com/TPI-2002(STD)
Engineering Software: Alpine Software,Version 9.05.
Structural Engineer of Record: The identity of the structural EOR did not exist as of
Address: the seal date per section 61G15-31.003(5a) of the FAC
Minimum Design Loads: Roof - 40.0 PSF @ 1.25 Duration
Floor - N/A
Wind - 110 MPH ASCE 7-05 -Closed

Seal Date: 09/17/2010

-Truss Design Engineer-
Doug Fleming
Florida License Number: 66648
1950 Marley Drive
Haines City, FL 33844

Notes:

1. Determination as to the suitability of these truss components for the structure is the responsibility of the building designer/engineer of record, as defined in ANSI/TPI 1
2. The drawing date shown on this index sheet must match the date shown on the individual truss component drawing.
3. As shown on attached drawings; the drawing number is preceded by: HCUSR487

Details: BRCLBSUB-

#	Ref Description	Drawing#	Date
1	33309--A	10260001	09/17/10
2	33310--H11A	10260007	09/17/10
3	33311--H9A	10260006	09/17/10
4	33312--H7A	10260008	09/17/10
5	33313--CJ1	10260005	09/17/10
6	33314--CJ3	10260003	09/17/10
7	33315--CJ5	10260002	09/17/10
8	33316--EJ7	10260004	09/17/10
9	33317--HJ7	10260003	09/17/10

COLUMBIA COUNTY BUILDING DEPARTMENT
Received for
FILE COPY
Code Compliance
PLANS EXAMINER

BOB MAY

Roof Plane Sheathing Area = 997 sq. ft

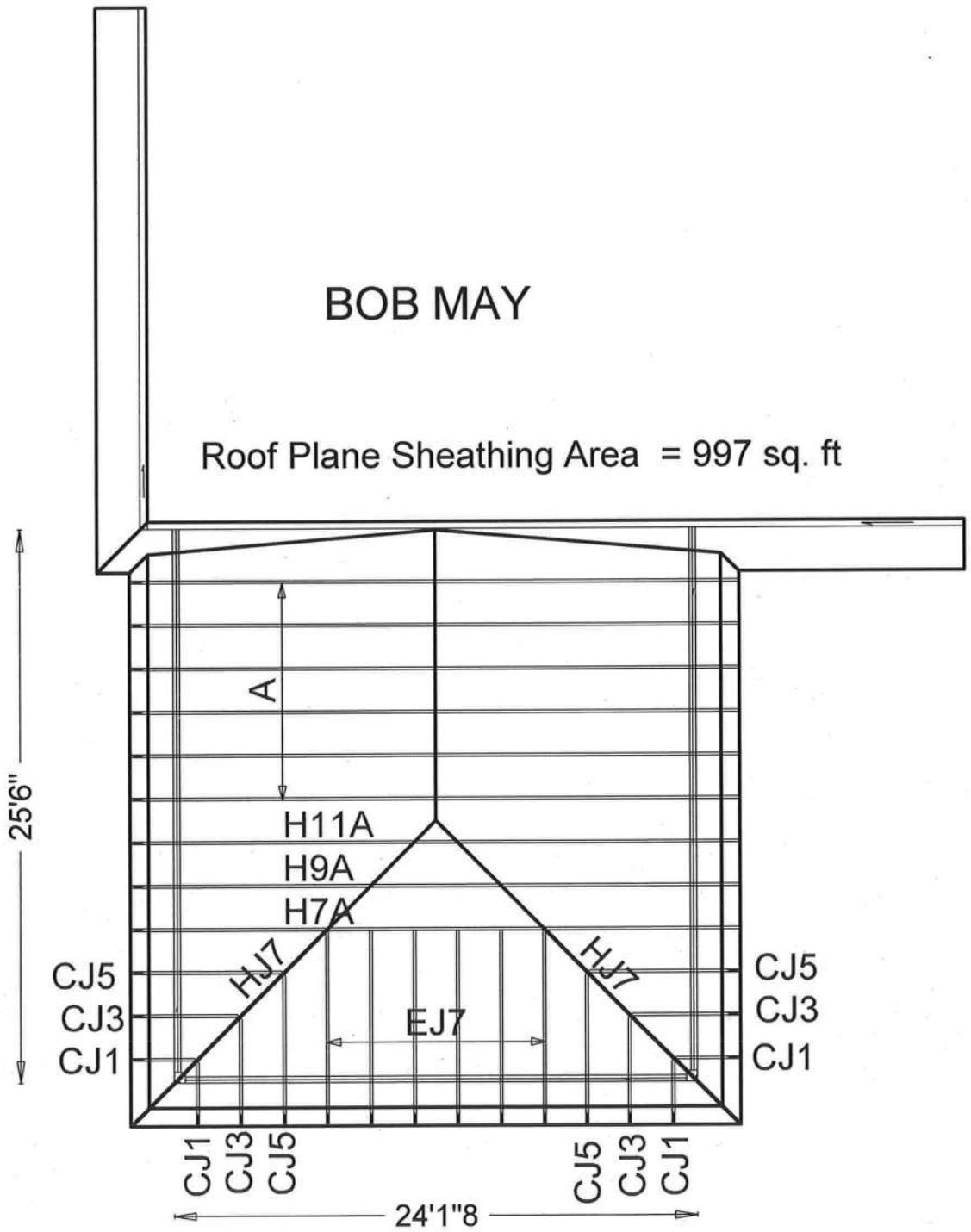

JOB DESCRIPTION:: Fill in later
/: BOB MAY

JOB NO:
10-188

PAGE NO:
1 OF 1

(10-188--Fill in later BOB MAY -- , ** - A)

Top chord 2x4 SP #2 Dense
Bot chord 2x4 SP #2 Dense
Webs 2x4 SP #3

(A) Continuous lateral bracing equally spaced on member.

Bottom chord checked for 10.00 psf non-concurrent live load.

110 mph wind, 15.00 ft mean hgt, ASCE 7-05, CLOSED bldg, Located anywhere in roof, CAT II, EXP B, wind TC DL=5.0 psf, wind BC DL=5.0 psf. Iw=1.00 GCpi(+/-)=0.18

Wind reactions based on MWFRS pressures.

Deflection meets L/240 live and L/180 total load.

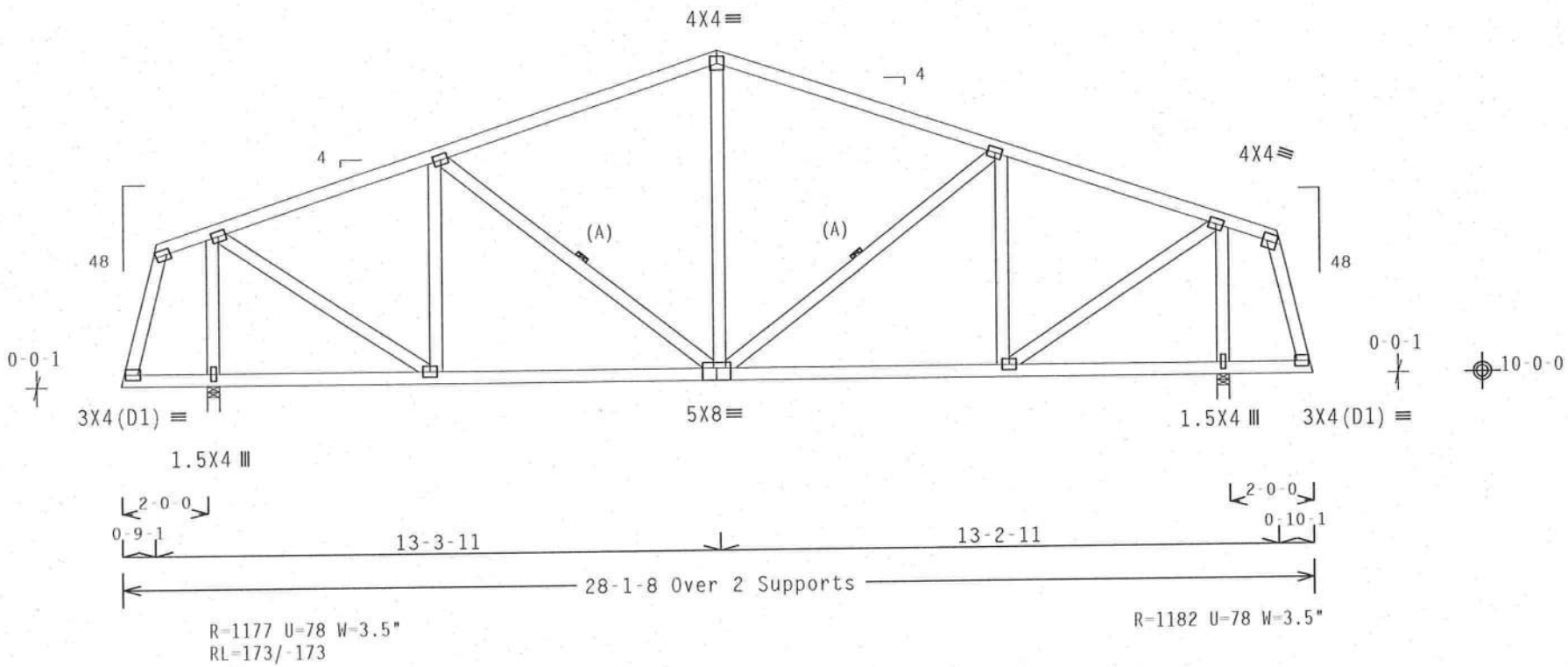

Note: All Plates Are 3X4 Except As Shown.

Design Crit: FBC2007Com/TPI-2002(STD)

PLT TYP. Wave

FT/RT=10%(0%)/0(0)

9.05.03 [illegible] QTY:6 FL/-/4/-/-/R/- Scale =.25"/Ft.

ALPINE
ITW Building Components Group Inc.

WARNING TRUSSES REQUIRE EXTREME CARE IN FABRICATION, HANDLING, SHIPPING, INSTALLING AND BRACING. REFER TO BCSI (BUILDING COMPONENT SAFETY INFORMATION), PUBLISHED BY TPI (TRUSS PLATE INSTITUTE, 218 NORTH LEE STREET, SUITE 312, ALEXANDRIA, VA. 22314) AND WTCA (WOOD TRUSS COUNCIL OF AMERICA, 6300 ENTERPRISE LANE, MADISON, WI 53719) FOR SAFETY PRACTICES PRIOR TO PERFORMING THESE FUNCTIONS. UNLESS OTHERWISE INDICATED TOP CHORD SHALL HAVE PROPERLY ATTACHED STRUCTURAL PANELS AND BOTTOM CHORD SHALL HAVE A PROPERLY ATTACHED RIGID CEILING.

IMPORTANT FURNISH A COPY OF THIS DESIGN TO THE INSTALLATION CONTRACTOR. ITW BCG, INC. SHALL NOT BE RESPONSIBLE FOR ANY DEVIATION FROM THIS DESIGN; ANY FAILURE TO BUILD THE TRUSS IN CONFORMANCE WITH TPI; OR FABRICATING, HANDLING, SHIPPING, INSTALLING & BRACING OF TRUSSES. DESIGN CONFORMS WITH APPLICABLE PROVISIONS OF NDS (NATIONAL DESIGN SPEC. BY AFAPA) AND TPI. ITW BCG CONNECTOR PLATES ARE MADE OF 20/18/16GA (H,H/SS/K) ASTM A653 GRADE 40/60 (H, K/H,SS) GALV. STEEL. APPLY PLATES TO EACH FACE OF TRUSS AND, UNLESS OTHERWISE LOCATED ON THIS DESIGN, POSITION PER DRAWINGS 160A-2. ANY INSPECTION OF PLATES FOLLOWED BY (1) SHALL BE PER ANNEX A3 OF TPI1-2002 SEC.3. A SEAL ON THIS DRAWING INDICATES ACCEPTANCE OF PROFESSIONAL ENGINEERING RESPONSIBILITY SOLELY FOR THE TRUSS COMPONENT

DOUGLAS FLEMING LICENSE No. 66648 STATE OF FLORIDA PROFESSIONAL ENGINEER

TC LL	20.0 PSF	REF R487-- 33309
TC DL	10.0 PSF	DATE 09/17/10
BC DL	10.0 PSF	DRW HCUSR487 10260001
BC LL	0.0 PSF	HC-ENG JB/DF
TOT.LD.	40.0 PSF	SEQN- 146430
DUR.FAC.	1.25	

[illegible] 17 '10

(10-188--Fill in later BOB MAY -- , ** - H11A)

Top chord 2x4 SP #2 Dense
Bot chord 2x4 SP #2 Dense
Webs 2x4 SP #3

In lieu of structural panels use purlins to brace all flat TC @ 24" OC.

Bottom chord checked for 10.00 psf non-concurrent live load.

MWFRS loads based on trusses located at least 7.50 ft. from roof edge.

110 mph wind, 15.00 ft mean hgt, ASCE 7-05, CLOSED bldg, not located within 4.50 ft from roof edge, CAT II, EXP B, wind TC DL=5.0 psf, wind BC DL=5.0 psf. Iw=1.00 GCpi(+/-)=0.18

Wind reactions based on MWFRS pressures.

Deflection meets L/240 live and L/180 total load.

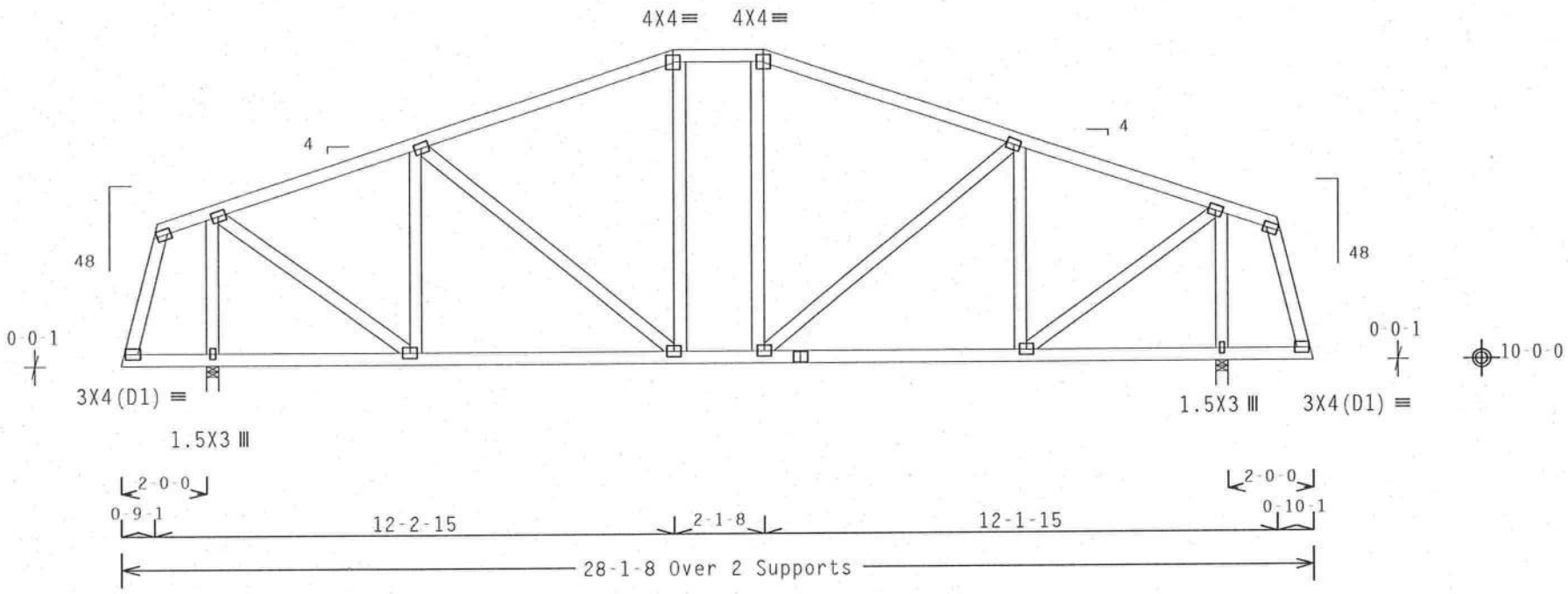

Note: All Plates Are 3X4 Except As Shown.

Design Crit: FBC2007Com/TPI-2002(STD)

PLT TYP. Wave FT/RT=10%(0%)/0(0) 9.05.03.0079.17 QTY:1 FL/-/4/-/-/R/- Scale =.25"/Ft.

ALPINE
ITW Building Components Group Inc.

WARNING TRUSSES REQUIRE EXTREME CARE IN FABRICATION, HANDLING, SHIPPING, INSTALLING AND BRACING. REFER TO BCSI (BUILDING COMPONENT SAFETY INFORMATION), PUBLISHED BY TPI (TRUSS PLATE INSTITUTE, 218 NORTH LEE STREET, SUITE 312, ALEXANDRIA, VA. 22314) AND WTCA (WOOD TRUSS COUNCIL OF AMERICA, 6300 ENTERPRISE LANE, MADISON, WI 53719) FOR SAFETY PRACTICES PRIOR TO PERFORMING THESE FUNCTIONS. UNLESS OTHERWISE INDICATED TOP CHORD SHALL HAVE PROPERLY ATTACHED STRUCTURAL PANELS AND BOTTOM CHORD SHALL HAVE A PROPERLY ATTACHED RIGID CEILING.

IMPORTANT FURNISH A COPY OF THIS DESIGN TO THE INSTALLATION CONTRACTOR. ITW BCG, INC. SHALL NOT BE RESPONSIBLE FOR ANY DEVIATION FROM THIS DESIGN; ANY FAILURE TO BUILD THE TRUSS IN CONFORMANCE WITH TPI; OR FABRICATING, HANDLING, SHIPPING, INSTALLING & BRACING OF TRUSSES.
DESIGN CONFORMS WITH APPLICABLE PROVISIONS OF NDS (NATIONAL DESIGN SPEC. BY AF&PA) AND TPI. ITW BCG CONNECTOR PLATES ARE MADE OF 20/18/16GA (W,H/SS/K) ASTM A653 GRADE 40/60 (N, K/H,SS) GALV. STEEL. APPLY PLATES TO EACH FACE OF TRUSS AND, UNLESS OTHERWISE LOCATED ON THIS DESIGN, POSITION PER DRAWINGS 160A-Z. ANY INSPECTION OF PLATES FOLLOWED BY (1) SHALL BE PER ANNEX A3 OF TPI1-2002 SEC.3. A SEAL ON THIS DRAWING INDICATES ACCEPTANCE OF PROFESSIONAL ENGINEERING RESPONSIBILITY SOLELY FOR THE TRUSS COMPONENT DESIGN SHOWN. THE SUITABILITY AND USE OF THIS COMPONENT FOR ANY BUILDING IS THE RESPONSIBILITY OF THE

DOUGLAS FLEMING LICENSE No. 66648 STATE OF FLORIDA PROFESSIONAL ENGINEER

TC LL	20.0 PSF	REF	R487-- 33310
TC DL	10.0 PSF	DATE	09/17/10
BC DL	10.0 PSF	DRW	HCUSR487 10260007
BC LL	0.0 PSF	HC-ENG	JB/DF
TOT.LD.	40.0 PSF	SEQN-	146425
DUR.FAC.	1.25		

(10-188--Fill in later BOB MAY -- , ** - H9A)

Top chord 2x4 SP #2 Dense
Bot chord 2x4 SP #2 Dense
Webs 2x4 SP #3

(A) Continuous lateral bracing equally spaced on member.

In lieu of structural panels use purlins to brace all flat TC @ 24" OC.

Deflection meets L/240 live and L/180 total load.

110 mph wind, 15.00 ft mean hgt, ASCE 7-05, CLOSED bldg, not located within 4.50 ft from roof edge, CAT II, EXP B, wind TC DL=5.0 psf, wind BC DL=5.0 psf. Iw=1.00 GCpi(+/-)=0.18

Wind reactions based on MWFRS pressures.

Bottom chord checked for 10.00 psf non-concurrent live load.

MWFRS loads based on trusses located at least 7.50 ft. from roof edge.

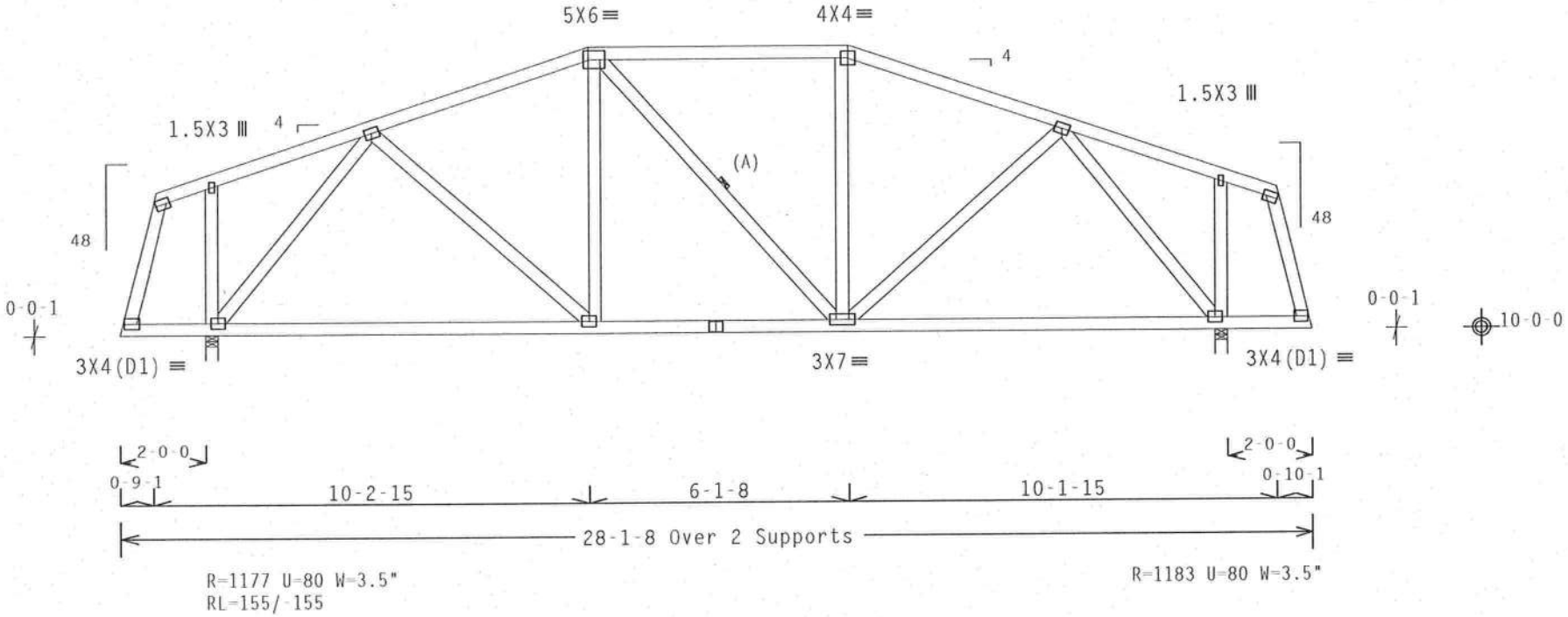

Note: All Plates Are 3X4 Except As Shown.

Design Crit: FBC2007Com/TPI-2002(STD)

PLT TYP. Wave | FT/RT=10%(0%)/0(0) | 9.05.03 | QTY:1 | FL/-/4/-/-/R/- | Scale =.25"/Ft.

ALPINE
ITW Building Components Group Inc.

WARNING TRUSSES REQUIRE EXTREME CARE IN FABRICATION, HANDLING, SHIPPING, INSTALLING AND BRACING. REFER TO BCSI (BUILDING COMPONENT SAFETY INFORMATION), PUBLISHED BY TPI (TRUSS PLATE INSTITUTE, 218 NORTH LEE STREET, SUITE 312, ALEXANDRIA, VA. 22314) AND WTCA (WOOD TRUSS COUNCIL OF AMERICA, 6300 ENTERPRISE LANE, MADISON, WI 53719) FOR SAFETY PRACTICES PRIOR TO PERFORMING THESE FUNCTIONS. UNLESS OTHERWISE INDICATED TOP CHORD SHALL HAVE PROPERLY ATTACHED STRUCTURAL PANELS AND BOTTOM CHORD SHALL HAVE A PROPERLY ATTACHED RIGID CEILING.

IMPORTANTFURNISH A COPY OF THIS DESIGN TO THE INSTALLATION CONTRACTOR. ITW BCG, INC. SHALL NOT BE RESPONSIBLE FOR ANY DEVIATION FROM THIS DESIGN; ANY FAILURE TO BUILD THE TRUSS IN CONFORMANCE WITH TPI; OR FABRICATING, HANDLING, SHIPPING, INSTALLING & BRACING OF TRUSSES.
DESIGN CONFORMS WITH APPLICABLE PROVISIONS OF NDS (NATIONAL DESIGN SPEC. BY AF&PA) AND TPI. ITW BCG CONNECTOR PLATES ARE MADE OF 20/18/16GA (W,H/SS/K) ASTM A653 GRADE 40/60 (H, K/H,SS) GALV. STEEL. APPLY PLATES TO EACH FACE OF TRUSS AND, UNLESS OTHERWISE LOCATED ON THIS DESIGN, POSITION PER DRAWINGS 160A-2. ANY INSPECTION OF PLATES FOLLOWED BY (1) SHALL BE PER ANNEX A3 OF TPI1-2002 SEC.3. A SEAL ON THIS DRAWING INDICATES ACCEPTANCE OF PROFESSIONAL ENGINEERING RESPONSIBILITY SOLELY FOR THE TRUSS COMPONENT DESIGN SHOWN. THE SUITABILITY AND USE OF THIS COMPONENT FOR ANY BUILDING IS THE RESPONSIBILITY OF THE

DOUGLAS FLEMING LICENSE No. 66648 STATE OF FLORIDA PROFESSIONAL ENGINEER

p 17 '10

TC LL	20.0 PSF	REF R487-- 33311
TC DL	10.0 PSF	DATE 09/17/10
BC DL	10.0 PSF	DRW HCUSR487 10260006
BC LL	0.0 PSF	HC-ENG JB/DF
TOT.LD.	40.0 PSF	SEQN- 146422
DUR.FAC.	1.25	

(10-188--Fill in later BOB MAY -- , ** - H7A)

Top chord 2x4 SP #2 Dense
Bot chord 2x4 SP #2 Dense
Webs 2x4 SP #3

In lieu of structural panels use purlins to brace all flat TC @ 24" OC.

#1 hip supports 9-0-0 jacks W/2 panel TC and no end vert.

Deflection meets L/240 live and L/180 total load.

110 mph wind, 15.00 ft mean hgt, ASCE 7-05, CLOSED bldg, not located within 4.50 ft from roof edge, CAT II, EXP B, wind TC DL=5.0 psf, wind BC DL=5.0 psf. Iw=1.00 GCpi(+/-)=0.18

Wind reactions based on MWFRS pressures.

Left side jacks have 9-0-0 setback with 2-0-0 cant and 0-0-0 overhang. End jacks have 9-0-0 setback with 2-0-0 cant and 0-0-0 overhang. Right side jacks have 9-0-0 setback with 2-0-0 cant and 0-0-0 overhang.

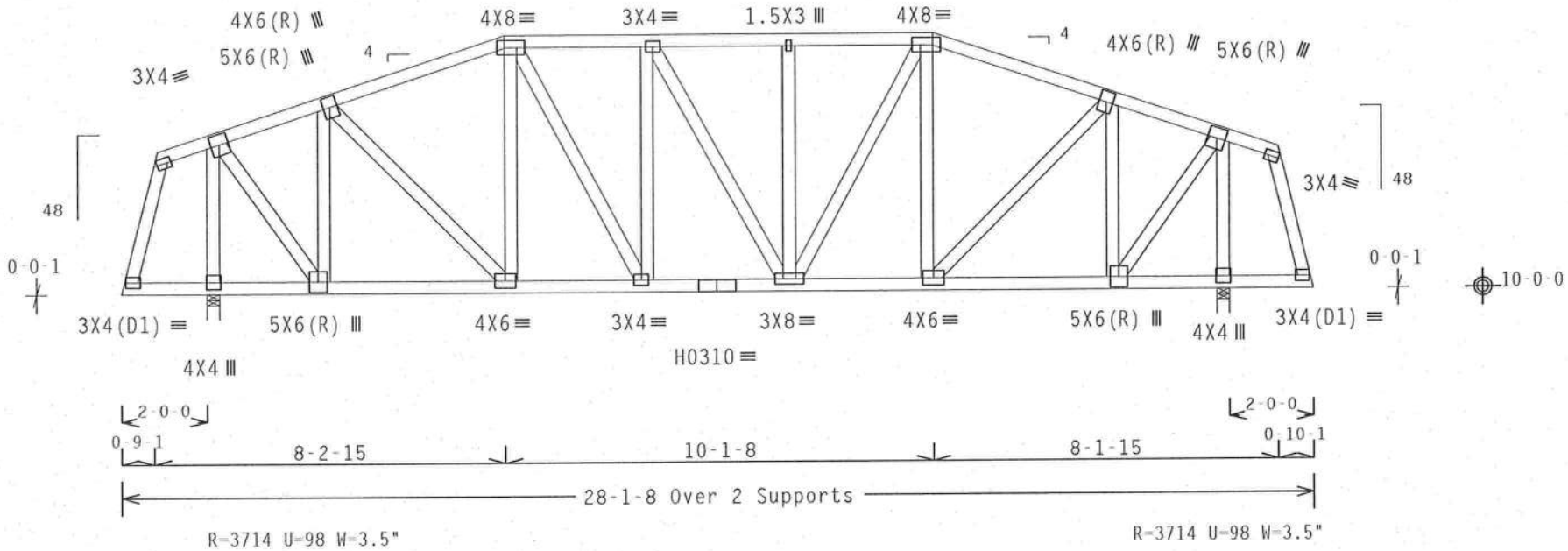

Design Crit: FBC2007Com/TPI-2002(STD)

PLT TYP. 20 Gauge HS,Wave | FT/RT=10%(0%)/0(0) | 9.05.03 | QTY:1 | FL/-/4/-/-/R/- | Scale =.25"/Ft.

ALPINE
ITW Building Components Group Inc.

WARNING TRUSSES REQUIRE EXTREME CARE IN FABRICATION, HANDLING, SHIPPING, INSTALLING AND BRACING. REFER TO BCSI (BUILDING COMPONENT SAFETY INFORMATION), PUBLISHED BY TPI (TRUSS PLATE INSTITUTE, 218 NORTH LEE STREET, SUITE 312, ALEXANDRIA, VA, 22314) AND WTCA (WOOD TRUSS COUNCIL OF AMERICA, 6300 ENTERPRISE LANE, MADISON, WI 53719) FOR SAFETY PRACTICES PRIOR TO PERFORMING THESE FUNCTIONS. UNLESS OTHERWISE INDICATED TOP CHORD SHALL HAVE PROPERLY ATTACHED STRUCTURAL PANELS AND BOTTOM CHORD SHALL HAVE A PROPERLY ATTACHED RIGID CEILING.

IMPORTANT FURNISH A COPY OF THIS DESIGN TO THE INSTALLATION CONTRACTOR. ITW BCG, INC. SHALL NOT BE RESPONSIBLE FOR ANY DEVIATION FROM THIS DESIGN; ANY FAILURE TO BUILD THE TRUSS IN CONFORMANCE WITH TPI; OR FABRICATING, HANDLING, SHIPPING, INSTALLING & BRACING OF TRUSSES.
DESIGN CONFORMS WITH APPLICABLE PROVISIONS OF NDS (NATIONAL DESIGN SPEC. BY AF&PA) AND TPI. ITW BCG CONNECTOR PLATES ARE MADE OF 20/18/16GA (W,H/SS/K) ASTM A653 GRADE 40/60 (W, K/H,SS) GALV. STEEL. APPLY PLATES TO EACH FACE OF TRUSS AND, UNLESS OTHERWISE LOCATED ON THIS DESIGN, POSITION PER DRAWINGS 160A-Z. ANY INSPECTION OF PLATES FOLLOWED BY (1) SHALL BE PER ANNEX A3 OF TPI1-2002 SEC.3. A SEAL ON THIS DRAWING INDICATES ACCEPTANCE OF PROFESSIONAL ENGINEERING RESPONSIBILITY SOLELY FOR THE TRUSS COMPONENT DESIGN SHOWN. THE SUITABILITY AND USE OF THIS COMPONENT FOR ANY BUILDING IS THE RESPONSIBILITY OF THE

DOUGLAS FLEMING LICENSE No. 66648 STATE OF FLORIDA PROFESSIONAL ENGINEER

Sep 17 '10

TC LL	20.0 PSF	REF	R487-- 33312
TC DL	10.0 PSF	DATE	09/17/10
BC DL	10.0 PSF	DRW	HCUSR487 10260008
BC LL	0.0 PSF	HC-ENG	JB/DF
TOT.LD.	40.0 PSF	SEQN-	146417
DUR.FAC.	1.25		

(10-188 -Fill in later BOB MAY -- , ** - CJ1)

Top chord 2x4 SP #2 Dense
Bot chord 2x4 SP #2 Dense
Webs 2x4 SP #3

Calculated horizontal deflection is 0.20" due to live load and 0.13" due to dead load.

Bottom chord checked for 10.00 psf non-concurrent live load.

Deflection meets L/240 live and L/180 total load.

Negative reaction(s) of -186# MAX. (See below) from a non-wind load case requires uplift connection.

110 mph wind, 15.00 ft mean hgt, ASCE 7-05, CLOSED bldg, Located anywhere in roof, CAT II, EXP B, wind TC DL=5.0 psf, wind BC DL=5.0 psf. Iw=1.00 GCpi(+/-)=0.18

Wind reactions based on MWFRS pressures.

Provide (2) 16d common nails(0.162"x3.5"), toe nailed at Top chord.
Provide (3) 16d common nails(0.162"x3.5"), toe nailed at Bot chord.

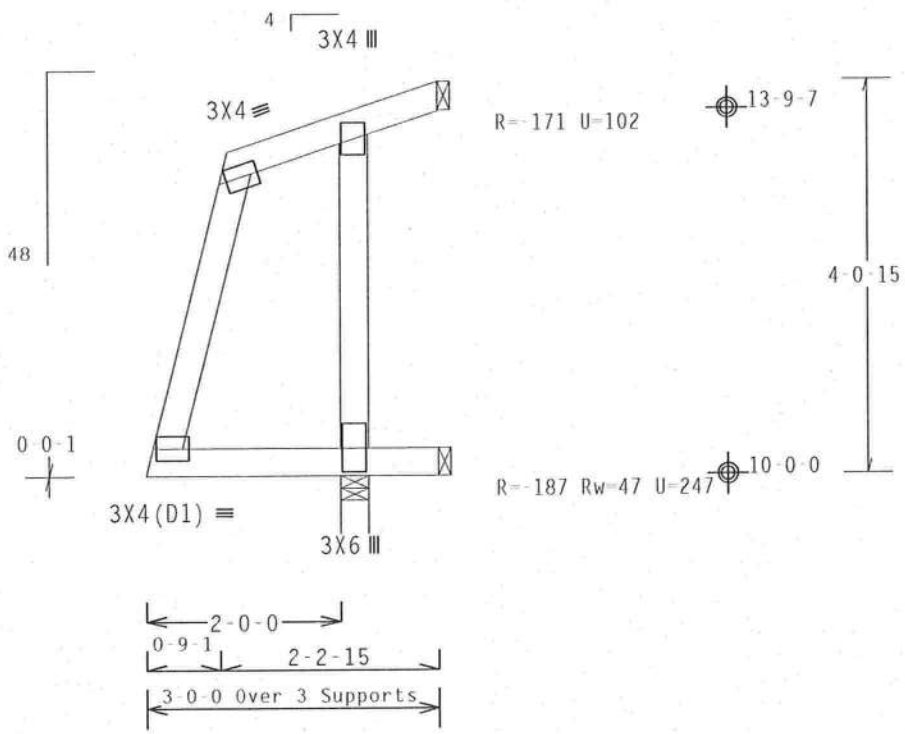

R=633 U=0 W=3.5"
RL=79/-55

Design Crit: FBC2007Com/TPI-2002(STD)
FT/RT=10%(0%)/0(0)

PLT TYP. Wave | 9.05.03 | QTY:4 | FL/-/4/-/-/R/- | Scale =.5"/Ft.

ALPINE
ITW Building Components Group Inc.

WARNING TRUSSES REQUIRE EXTREME CARE IN FABRICATION, HANDLING, SHIPPING, INSTALLING AND BRACING. REFER TO BCSI (BUILDING COMPONENT SAFETY INFORMATION), PUBLISHED BY TPI (TRUSS PLATE INSTITUTE, 218 NORTH LEE STREET, SUITE 312, ALEXANDRIA, VA. 22314) AND WTCA (WOOD TRUSS COUNCIL OF AMERICA, 6300 ENTERPRISE LANE, MADISON, WI 53719) FOR SAFETY PRACTICES PRIOR TO PERFORMING THESE FUNCTIONS. UNLESS OTHERWISE INDICATED TOP CHORD SHALL HAVE PROPERLY ATTACHED STRUCTURAL PANELS AND BOTTOM CHORD SHALL HAVE A PROPERLY ATTACHED RIGID CEILING.

IMPORTANTFURNISH A COPY OF THIS DESIGN TO THE INSTALLATION CONTRACTOR. ITW BCG, INC. SHALL NOT BE RESPONSIBLE FOR ANY DEVIATION FROM THIS DESIGN; ANY FAILURE TO BUILD THE TRUSS IN CONFORMANCE WITH TPI; OR FABRICATING, HANDLING, SHIPPING, INSTALLING & BRACING OF TRUSSES.
DESIGN CONFORMS WITH APPLICABLE PROVISIONS OF NDS (NATIONAL DESIGN SPEC. BY AF&PA) AND TPI. ITW BCG CONNECTOR PLATES ARE MADE OF 20/18/16GA (H,H/SS/K) ASTM A653 GRADE 40/60 (H, K/H,SS) GALV. STEEL. APPLY PLATES TO EACH FACE OF TRUSS AND, UNLESS OTHERWISE LOCATED ON THIS DESIGN, POSITION PER DRAWINGS 160A-2. ANY INSPECTION OF PLATES FOLLOWED BY (I) SHALL BE PER ANNEX A3 OF TPI1-2002 SEC.3. A SEAL ON THIS DRAWING INDICATES ACCEPTANCE OF PROFESSIONAL ENGINEERING RESPONSIBILITY SOLELY FOR THE TRUSS COMPONENT DESIGN SHOWN. THE SUITABILITY AND USE OF THIS COMPONENT FOR ANY BUILDING IS THE RESPONSIBILITY OF THE

DOUGLAS FLEMING LICENSE No. 66648 STATE OF FLORIDA PROFESSIONAL ENGINEER

17 '10

TC LL	20.0 PSF	REF R487-- 33313
TC DL	10.0 PSF	DATE 09/17/10
BC DL	10.0 PSF	DRW HCUSR487 10260005
BC LL	0.0 PSF	HC-ENG JB/DF
TOT.LD.	40.0 PSF	SEQN- 146433
DUR.FAC.	1.25	

(10-188--Fill in later BOB MAY -- , ** - CJ3)

Top chord 2x4 SP #2 Dense
Bot chord 2x4 SP #2 Dense
Webs 2x4 SP #3

Calculated horizontal deflection is 0.30" due to live load and 0.20" due to dead load.

Deflection meets L/240 live and L/180 total load.

110 mph wind, 15.00 ft mean hgt, ASCE 7-05, CLOSED bldg, not located within 4.50 ft from roof edge, CAT II, EXP B, wind TC DL=5.0 psf, wind BC DL=5.0 psf. Iw=1.00 GCpi(+/-)=0.18

Wind reactions based on MWFRS pressures.

Bottom chord checked for 10.00 psf non-concurrent live load.

Provide (2) 16d common nails(0.162"x3.5"), toe nailed at Top chord.
Provide (2) 16d common nails(0.162"x3.5"), toe nailed at Bot chord.

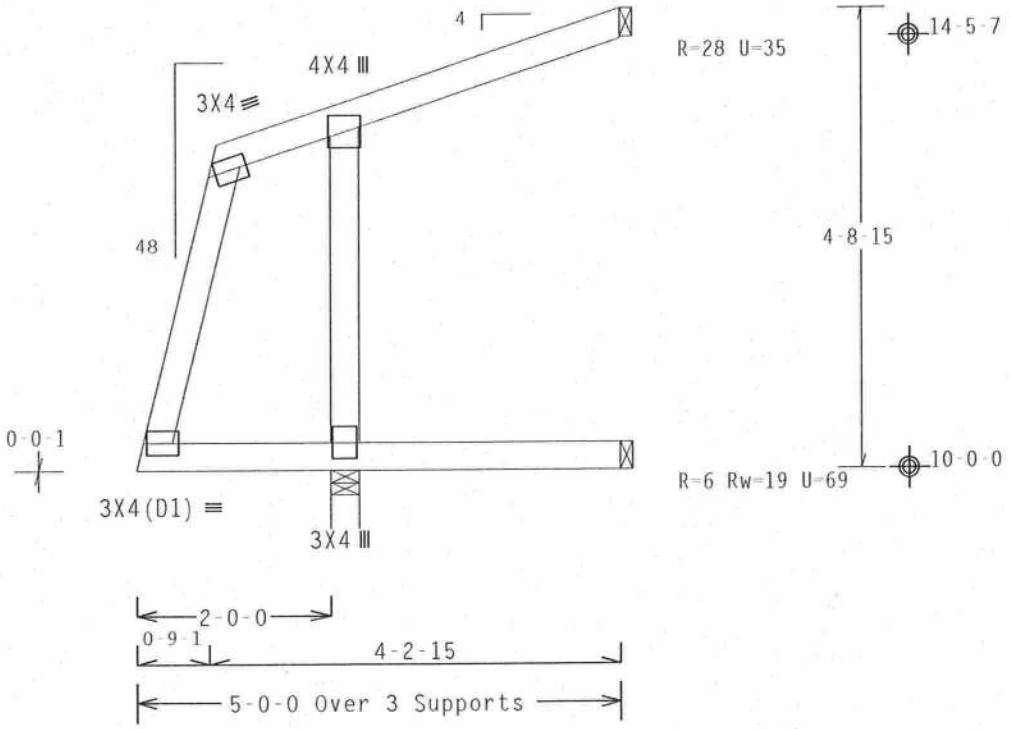

Design Crit: FBC2007Com/TPI-2002(STD)

PLT TYP. Wave | FT/RT=10%(0%)/0(0) | 9.05.03 | QTY:4 | FL/-/4/-/-/R/- | Scale =.5"/Ft.

WARNING TRUSSES REQUIRE EXTREME CARE IN FABRICATION, HANDLING, SHIPPING, INSTALLING AND BRACING. REFER TO BCSI (BUILDING COMPONENT SAFETY INFORMATION), PUBLISHED BY TPI (TRUSS PLATE INSTITUTE, 218 NORTH LEE STREET, SUITE 312, ALEXANDRIA, VA, 22314) AND WTCA (WOOD TRUSS COUNCIL OF AMERICA, 6300 ENTERPRISE LANE, MADISON, WI 53719) FOR SAFETY PRACTICES PRIOR TO PERFORMING THESE FUNCTIONS. UNLESS OTHERWISE INDICATED TOP CHORD SHALL HAVE PROPERLY ATTACHED STRUCTURAL PANELS AND BOTTOM CHORD SHALL HAVE A PROPERLY ATTACHED RIGID CEILING.

IMPORTANTFURNISH A COPY OF THIS DESIGN TO THE INSTALLATION CONTRACTOR. ITW BCG, INC. SHALL NOT BE RESPONSIBLE FOR ANY DEVIATION FROM THIS DESIGN; ANY FAILURE TO BUILD THE TRUSS IN CONFORMANCE WITH TPI; OR FABRICATING, HANDLING, SHIPPING, INSTALLING & BRACING OF TRUSSES.
DESIGN CONFORMS WITH APPLICABLE PROVISIONS OF NDS (NATIONAL DESIGN SPEC. BY AF&PA) AND TPI. ITW BCG CONNECTOR PLATES ARE MADE OF 20/18/16GA (H,H/SS/K) ASTM A653 GRADE 40/60 (H, K/H,SS) GALV. STEEL. APPLY PLATES TO EACH FACE OF TRUSS AND, UNLESS OTHERWISE LOCATED ON THIS DESIGN, POSITION PER DRAWINGS 160A-2. ANY INSPECTION OF PLATES FOLLOWED BY (1) SHALL BE PER ANNEX A3 OF TPI1-2002 SEC.3. A SEAL ON THIS DRAWING INDICATES ACCEPTANCE OF PROFESSIONAL ENGINEERING RESPONSIBILITY SOLELY FOR THE TRUSS COMPONENT DESIGN SHOWN. THE SUITABILITY AND USE OF THIS COMPONENT FOR ANY BUILDING IS THE RESPONSIBILITY OF THE

ALPINE
ITW Building Components Group Inc.

DOUGLAS FLEMING LICENSE No. 66648 STATE OF FLORIDA PROFESSIONAL ENGINEER

TC LL	20.0 PSF	REF R487-- 33314
TC DL	10.0 PSF	DATE 09/17/10
BC DL	10.0 PSF	DRW HCUSR487 10260003
BC LL	0.0 PSF	HC-ENG JB/DF
TOT.LD.	40.0 PSF	SEQN- 146436
DUR.FAC.	1.25	

(10-188--Fill in later BOB MAY -- , ** - CJ5)

Top chord 2x4 SP #2 Dense
Bot chord 2x4 SP #2 Dense
Webs 2x4 SP #2 Dense

Calculated horizontal deflection is 0.39" due to live load and 0.26" due to dead load.

Bottom chord checked for 10.00 psf non-concurrent live load.

Deflection meets L/240 live and L/180 total load.

110 mph wind, 15.00 ft mean hgt, ASCE 7-05, CLOSED bldg, not located within 4.50 ft from roof edge, CAT II, EXP B, wind TC DL=5.0 psf, wind BC DL=5.0 psf. Iw=1.00 GCpi(+/-)=0.18

Wind reactions based on MWFRS pressures.

Truss passed check for 20 psf additional bottom chord live load in areas with 42"-high x 24"-wide clearance.

Provide (2) 16d common nails(0.162"x3.5"), toe nailed at Top chord.
Provide (2) 16d common nails(0.162"x3.5"), toe nailed at Bot chord.

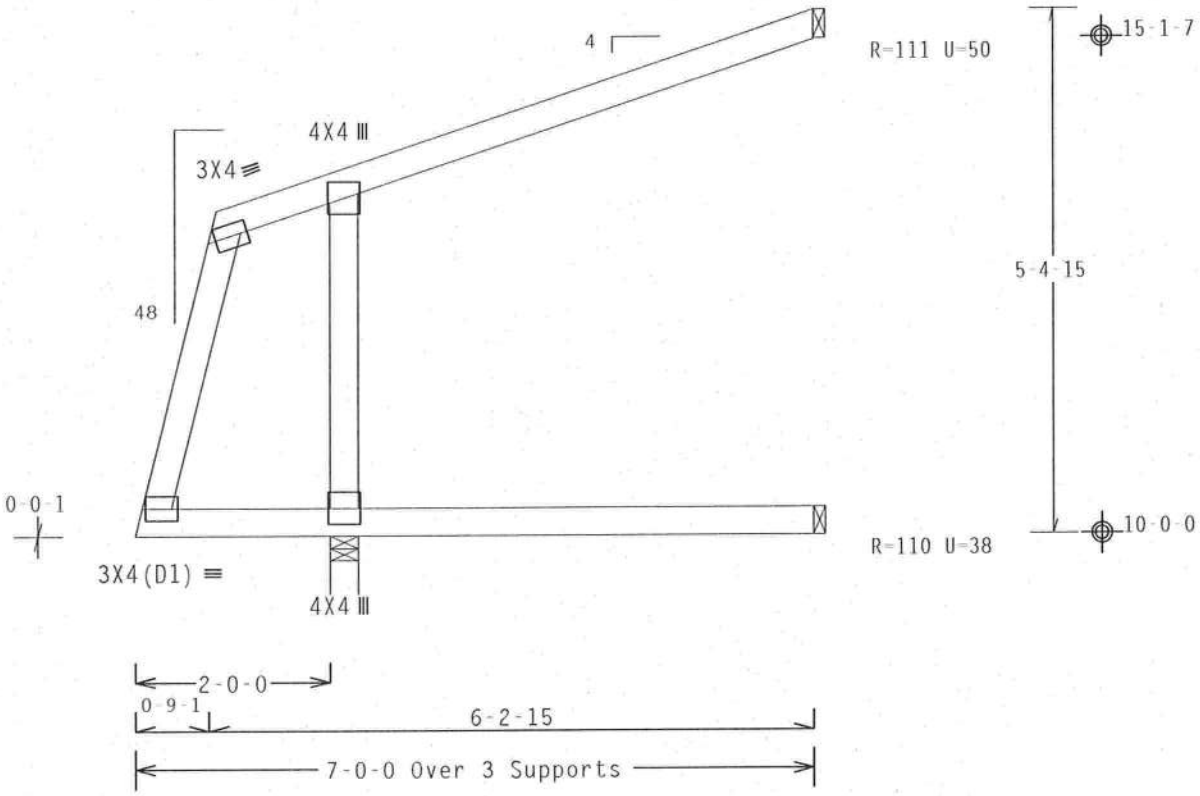

Design Crit: FBC2007Com/TPI-2002(STD)

PLT TYP. Wave | FT/RT=10%(0%)/0(0) | 9.05.03 | QTY:4 | FL/-/4/-/-/R/- | Scale =.5"/Ft.

ALPINE
ITW Building Components Group Inc.

WARNING TRUSSES REQUIRE EXTREME CARE IN FABRICATION, HANDLING, SHIPPING, INSTALLING AND BRACING. REFER TO BCSI (BUILDING COMPONENT SAFETY INFORMATION), PUBLISHED BY TPI (TRUSS PLATE INSTITUTE, 218 NORTH LEE STREET, SUITE 312, ALEXANDRIA, VA. 22314) AND WTCA (WOOD TRUSS COUNCIL OF AMERICA, 6300 ENTERPRISE LANE, MADISON, WI 53719) FOR SAFETY PRACTICES PRIOR TO PERFORMING THESE FUNCTIONS. UNLESS OTHERWISE INDICATED TOP CHORD SHALL HAVE PROPERLY ATTACHED STRUCTURAL PANELS AND BOTTOM CHORD SHALL HAVE A PROPERLY ATTACHED RIGID CEILING.

IMPORTANT FURNISH A COPY OF THIS DESIGN TO THE INSTALLATION CONTRACTOR. ITW BCG, INC. SHALL NOT BE RESPONSIBLE FOR ANY DEVIATION FROM THIS DESIGN; ANY FAILURE TO BUILD THE TRUSS IN CONFORMANCE WITH TPI; OR FABRICATING, HANDLING, SHIPPING, INSTALLING & BRACING OF TRUSSES.
DESIGN CONFORMS WITH APPLICABLE PROVISIONS OF NDS (NATIONAL DESIGN SPEC. BY AF&PA) AND TPI. ITW BCG CONNECTOR PLATES ARE MADE OF 20/18/16GA (W,H/SS/K) ASTM A653 GRADE 40/60 (W, K/H,SS) GALV. STEEL. APPLY PLATES TO EACH FACE OF TRUSS AND, UNLESS OTHERWISE LOCATED ON THIS DESIGN, POSITION PER DRAWINGS 160A-Z. ANY INSPECTION OF PLATES FOLLOWED BY (I) SHALL BE PER ANNEX A3 OF TPI1-2002 SEC.3. A SEAL ON THIS DRAWING INDICATES ACCEPTANCE OF PROFESSIONAL ENGINEERING RESPONSIBILITY SOLELY FOR THE TRUSS COMPONENT DESIGN SHOWN. THE SUITABILITY AND USE OF THIS COMPONENT FOR ANY BUILDING IS THE RESPONSIBILITY OF THE

DOUGLAS FLEMING LICENSE No. 66648 STATE OF FLORIDA PROFESSIONAL ENGINEER

Sep 17 '10

TC LL	20.0 PSF	REF	R487-- 33315
TC DL	10.0 PSF	DATE	09/17/10
BC DL	10.0 PSF	DRW	HCUSR487 10260002
BC LL	0.0 PSF	HC-ENG	JB/DF
TOT.LD.	40.0 PSF	SEQN-	146439
DUR.FAC.	1.25		

(10-188--Fill in later BOB MAY -- , ** - EJ7)

Top chord 2x4 SP #2 Dense
Bot chord 2x4 SP #2 Dense
Webs 2x4 SP #3

Truss passed check for 20 psf additional bottom chord live load in areas with 42"-high x 24"-wide clearance.

Deflection meets L/240 live and L/180 total load.

Provide (2) 16d common nails(0.162"x3.5"), toe nailed at Top chord.
Provide (2) 16d common nails(0.162"x3.5"), toe nailed at Bot chord.

110 mph wind, 15.00 ft mean hgt, ASCE 7-05, CLOSED bldg, not located within 4.50 ft from roof edge, CAT II, EXP B, wind TC DL=5.0 psf, wind BC DL=5.0 psf. Iw=1.00 GCpi(+/-)=0.18

Wind reactions based on MWFRS pressures.

Bottom chord checked for 10.00 psf non-concurrent live load.

MWFRS loads based on trusses located at least 7.50 ft. from roof edge.

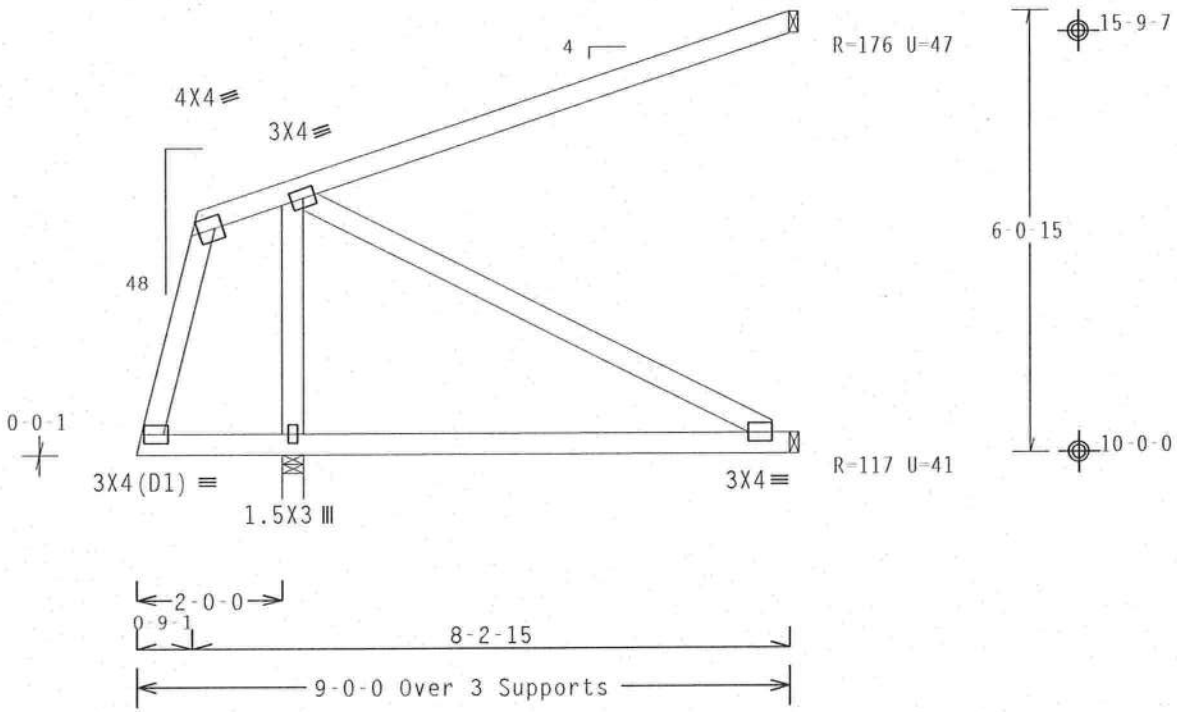

R=532 U=0 W=3.5"
RL=126/-62

Design Crit: FBC2007Com/TPI-2002(STD)

PLT TYP. Wave | FT/RT=10%(0%)/0(0) | 9.05.03 | QTY:6 | FL/-/4/-/-/R/- | Scale =.375"/Ft.

ALPINE
ITW Building Components Group Inc.

WARNING TRUSSES REQUIRE EXTREME CARE IN FABRICATION, HANDLING, SHIPPING, INSTALLING AND BRACING. REFER TO BCSI (BUILDING COMPONENT SAFETY INFORMATION), PUBLISHED BY TPI (TRUSS PLATE INSTITUTE, 218 NORTH LEE STREET, SUITE 312, ALEXANDRIA, VA. 22314) AND WTCA (WOOD TRUSS COUNCIL OF AMERICA, 6300 ENTERPRISE LANE, MADISON, WI 53719) FOR SAFETY PRACTICES PRIOR TO PERFORMING THESE FUNCTIONS. UNLESS OTHERWISE INDICATED TOP CHORD SHALL HAVE PROPERLY ATTACHED STRUCTURAL PANELS AND BOTTOM CHORD SHALL HAVE A PROPERLY ATTACHED RIGID CEILING.

IMPORTANT FURNISH A COPY OF THIS DESIGN TO THE INSTALLATION CONTRACTOR. ITW BCG, INC. SHALL NOT BE RESPONSIBLE FOR ANY DEVIATION FROM THIS DESIGN; ANY FAILURE TO BUILD THE TRUSS IN CONFORMANCE WITH TPI; OR FABRICATING, HANDLING, SHIPPING, INSTALLING & BRACING OF TRUSSES.
DESIGN CONFORMS WITH APPLICABLE PROVISIONS OF NDS (NATIONAL DESIGN SPEC. BY AF&PA) AND TPI. ITW BCG CONNECTOR PLATES ARE MADE OF 20/18/16GA (W,H/SS/K) ASTM A653 GRADE 40/60 (H, K/H,SS) GALV. STEEL. APPLY PLATES TO EACH FACE OF TRUSS AND, UNLESS OTHERWISE LOCATED ON THIS DESIGN, POSITION PER DRAWINGS 160A-Z. ANY INSPECTION OF PLATES FOLLOWED BY (1) SHALL BE PER ANNEX A3 OF TPI1-2002 SEC.3. A SEAL ON THIS DRAWING INDICATES ACCEPTANCE OF PROFESSIONAL ENGINEERING RESPONSIBILITY SOLELY FOR THE TRUSS COMPONENT DESIGN SHOWN. THE SUITABILITY AND USE OF THIS COMPONENT FOR ANY BUILDING IS THE RESPONSIBILITY OF THE

DOUGLAS FLEMING LICENSE No. 66648 STATE OF FLORIDA PROFESSIONAL ENGINEER

Sep 17 '10

TC LL	20.0 PSF	REF	R487-- 33316
TC DL	10.0 PSF	DATE	09/17/10
BC DL	10.0 PSF	DRW	HCUSR487 10260004
BC LL	0.0 PSF	HC-ENG	JB/DF
TOT.LD.	40.0 PSF	SEQN-	146442
DUR.FAC.	1.25		

(10-188--Fill in later BOB MAY -- , ** - HJ7)

Top chord 2x4 SP #2 Dense
Bot chord 2x4 SP #2 Dense
Webs 2x4 SP #3

The following members need concentrated loads at the heel: 5-0-0 span/setback member on the 2-0-0 cant side requires 92 lbs and the 5-0-0 span/setback member on the 2-0-0 cant side requires 92 lbs.

Sub-fascia beam assumptions: 5-0-0 sub-fascia beam on the 2-0-0 cantilever side. 5-0-0 sub-fascia beam on the 2-0-0 cantilever side.

Deflection meets L/240 live and L/180 total load.

110 mph wind, 15.00 ft mean hgt, ASCE 7-05, CLOSED bldg, not located within 4.50 ft from roof edge, CAT II, EXP B, wind TC DL=5.0 psf, wind BC DL=5.0 psf. Iw=1.00 GCpi(+/-)=0.18

Wind reactions based on MWFRS pressures.

Right end vertical not exposed to wind pressure.

Hipjack supports 9-0-0 setback jacks with 2-0-0 cantilever one face; 2-0-0 cantilever opposite face.

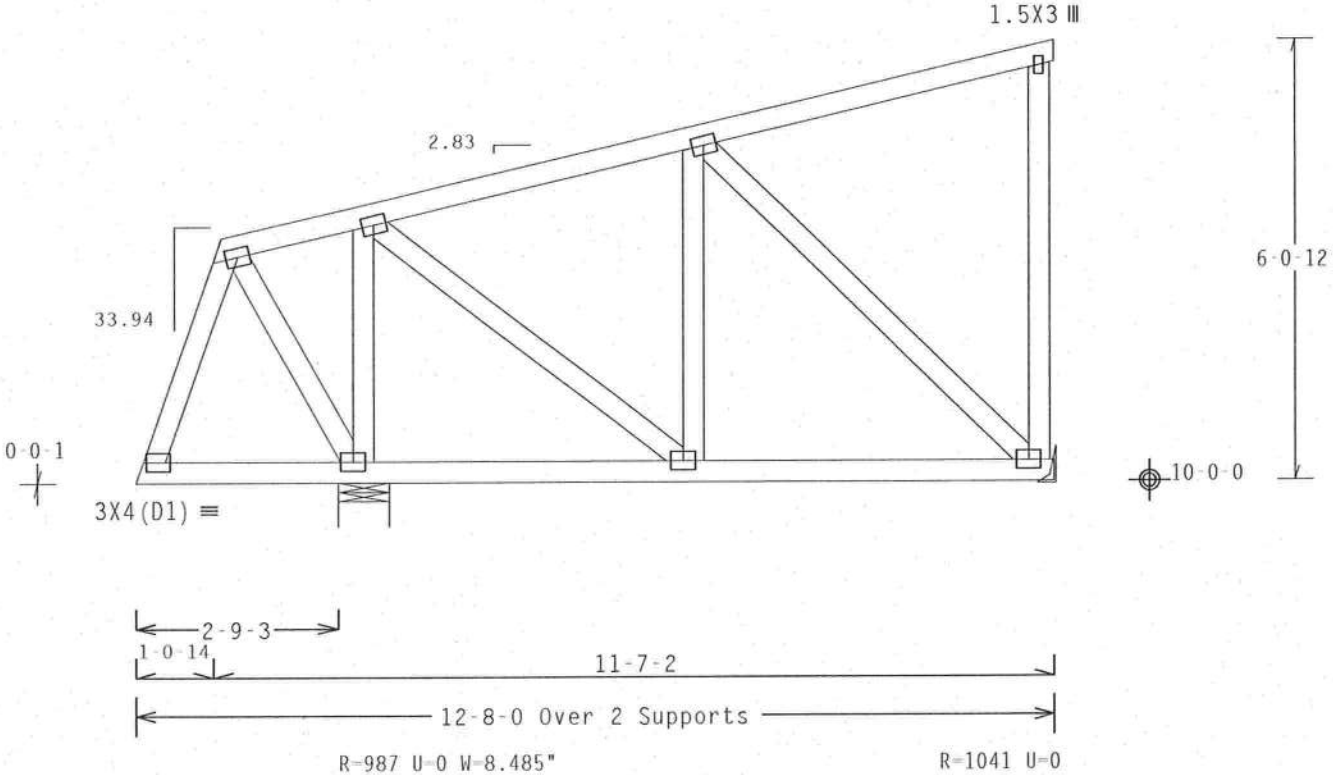

Note: All Plates Are 3X4 Except As Shown.

Design Crit: FBC2007Com/TPI-2002(STD)

PLT TYP. Wave FT/RT=10%(0%)/0(0) 9.05.03 QTY:2 FL/-/4/-/-/R/- Scale =.375"/Ft.

ALPINE
ITW Building Components Group Inc.

WARNING TRUSSES REQUIRE EXTREME CARE IN FABRICATION, HANDLING, SHIPPING, INSTALLING AND BRACING. REFER TO BCSI (BUILDING COMPONENT SAFETY INFORMATION), PUBLISHED BY TPI (TRUSS PLATE INSTITUTE, 218 NORTH LEE STREET, SUITE 312, ALEXANDRIA, VA. 22314) AND WTCA (WOOD TRUSS COUNCIL OF AMERICA, 6300 ENTERPRISE LANE, MADISON, WI 53719) FOR SAFETY PRACTICES PRIOR TO PERFORMING THESE FUNCTIONS. UNLESS OTHERWISE INDICATED TOP CHORD SHALL HAVE PROPERLY ATTACHED STRUCTURAL PANELS AND BOTTOM CHORD SHALL HAVE A PROPERLY ATTACHED RIGID CEILING.

IMPORTANTFURNISH A COPY OF THIS DESIGN TO THE INSTALLATION CONTRACTOR. ITW BCG, INC. SHALL NOT BE RESPONSIBLE FOR ANY DEVIATION FROM THIS DESIGN; ANY FAILURE TO BUILD THE TRUSS IN CONFORMANCE WITH TPI; OR FABRICATING, HANDLING, SHIPPING, INSTALLING & BRACING OF TRUSSES. DESIGN CONFORMS WITH APPLICABLE PROVISIONS OF NDS (NATIONAL DESIGN SPEC. BY AFAPA) AND TPI. ITW BCG CONNECTOR PLATES ARE MADE OF 20/18/16GA (W,H/SS/K) ASTM A653 GRADE 40/60 (W, K/H,SS) GALV. STEEL. APPLY PLATES TO EACH FACE OF TRUSS AND, UNLESS OTHERWISE LOCATED ON THIS DESIGN, POSITION PER DRAWINGS 160A-Z. ANY INSPECTION OF PLATES FOLLOWED BY (1) SHALL BE PER ANNEX A3 OF TPI1-2002 SEC.3. A SEAL ON THIS DRAWING INDICATES ACCEPTANCE OF PROFESSIONAL ENGINEERING RESPONSIBILITY SOLELY FOR THE TRUSS COMPONENT DESIGN SHOWN. THE SUITABILITY AND USE OF THIS COMPONENT FOR ANY BUILDING IS THE RESPONSIBILITY OF THE

DOUGLAS FLEMING LICENSE No. 66648 STATE OF FLORIDA PROFESSIONAL ENGINEER

Sep 17 '10

TC LL	20.0 PSF	REF	R487-- 33317
TC DL	10.0 PSF	DATE	09/17/10
BC DL	10.0 PSF	DRW	HCUSR487 10260003
BC LL	0.0 PSF	HC-ENG	JB/DF
TOT.LD.	40.0 PSF	SEQN-	146723
DUR.FAC.	1.25		

CLB WEB BRACE SUBSTITUTION

THIS DETAIL IS TO BE USED WHEN CONTINUOUS LATERAL BRACING (CLB) IS SPECIFIED ON A TRUSS DESIGN BUT AN ALTERNATIVE WEB BRACING METHOD IS DESIRED.

NOTES:

THIS DETAIL IS ONLY APPLICABLE FOR CHANGING THE SPECIFIED CLB SHOWN ON SINGLE PLY SEALED DESIGNS TO T-BRACING OR SCAB BRACING.

ALTERNATIVE BRACING SPECIFIED IN CHART BELOW MAY BE CONSERVATIVE. FOR MINIMUM ALTERNATIVE BRACING, RE-RUN DESIGN WITH APPROPRIATE BRACING.

WEB MEMBER SIZE	SPECIFIED CLB BRACING	ALTERNATIVE BRACING T OR L-BRACE	ALTERNATIVE BRACING SCAB BRACE
2X3 OR 2X4	1 ROW	2X4	1-2X4
2X3 OR 2X4	2 ROWS	2X6	2-2X4
2X6	1 ROW	2X4	1-2X6
2X6	2 ROWS	2X6	2-2X4(*)
2X8	1 ROW	2X6	1-2X8
2X8	2 ROWS	2X6	2-2X6(*)

T-BRACE, L-BRACE AND SCAB BRACE TO BE SAME SPECIES AND GRADE OR BETTER THAN WEB MEMBER UNLESS SPECIFIED OTHERWISE ON ENGINEER'S SEALED DESIGN.

(*) CENTER SCAB ON WIDE FACE OF WEB. APPLY (1) SCAB TO EACH FACE OF WEB.

T-BRACING OR L-BRACING:

APPLY TO EITHER SIDE OF WEB NARROW FACE.
ATTACH WITH 10d BOX OR GUN
(0.128"x 3.",MIN) NAILS.
AT 6" O.C.
BRACE IS A
MINIMUM 80% OF WEB
MEMBER LENGTH

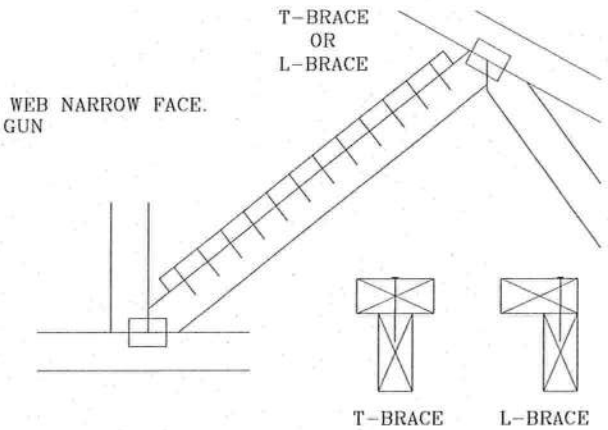

SCAB BRACING:

APPLY SCAB(S) TO WIDE FACE OF WEB.
NO MORE THAN (1) SCAB PER FACE.
ATTACH WITH 10d BOX OR GUN
(0.128"x 3.",MIN) NAILS.
AT 6" O.C.
BRACE IS A MINIMUM
80% OF WEB MEMBER LENGTH

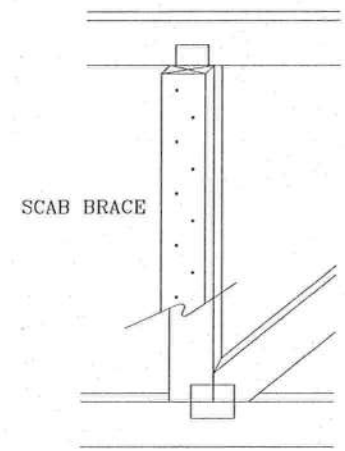

TW Building Components Group Inc.
Earth City, MO 63045

WARNING READ AND FOLLOW ALL NOTES ON THIS SHEET!
Trusses require extreme care in fabricating, handling, shipping, installing and bracing. Refer to and follow BCSI (Building Component Safety Information, by TPI and WTCA) for safety practices prior to performing these functions. Installers shall provide temporary bracing per BCSI. Unless noted otherwise, top chord shall have properly attached structural panels and bottom chord shall have a properly attached rigid ceiling. Locations shown for permanent lateral restraint of webs shall have bracing installed per BCSI sections B3 & B7. See this job's general notes page for more information.

IMPORTANT FURNISH COPY OF THIS DESIGN TO INSTALLATION CONTRACTOR.
ITW Building Components Group Inc. (ITWBCG) shall not be responsible for any deviation from this design, any failure to build the truss in conformance with TPI, or fabricating, handling, shipping, installing & bracing of trusses. ITWBCG connector plates are made of 20/18/16GA (W,H/S/K) ASTM A653 grade 37/40/60 (K/W/H,S) galv. steel. Apply plates to each face of truss, positioned as shown above and on Joint Details. A seal on this drawing or cover page indicates acceptance and professional engineering responsibility solely for the truss component design shown. The suitability and use of this component for any building is the responsibility of the Building Designer per ANST/TPI 1 Sec. 2.
ITW-BCG: www.itwbcg.com; TPI: www.tpinst.com; WTCA: www.sbcindustry.com; ICC: www.iccsafe.org

DOUGLAS FLEMING LICENSE No 66648 STATE OF FLORIDA PROFESSIONAL ENGINEER
Sep 17 '10

TC LL	PSF	REF CLB SUBST.
TC DL	PSF	DATE 1/1/09
BC DL	PSF	DRWG BRCLBSUB0109
BC LL	PSF	
TOT. LD.	PSF	
DUR. FAC.		
SPACING		