LOT 1 BLOCK B MARION PLACE S/D P
922-900, LE 1404-1861,

KENNON F L JR/KENNON MARIE R
1785 SW PALOMA CT
LAKE CITY, FL 32025

2023

05-4S-17-07610-351

COLUMBIA COUNTY PROPERTY

BUILDING CHARACTERISTICS

ELEMENT	CD	CONSTRUCTION
Exterior Wall	19	COMMON BRK 100
Roof Structur	03	GABLE/HIP 100
Roof Cover	03	COMP SHNGL 100
Interior Wall	05	DRYWALL 100
Interior Floo	14	CARPET 90
Interior Floo	15	HARDTILE 10
Air Condition	03	CENTRAL 100
Heating Type	04	AIR DUCTED 100
Bedrooms		2 100
Bathrooms		2 100
Frame	01	NONE 100
Stories	1.	1. 100
Architectual	05	CONV 100
Units		0 100
Condition Adj	03	03 100
Kitchen Adjus	01	01 100
Quality	06	06
DOR CODE	0100	SINGLE FAMILY
MAP NUM		MKT AREA 06
NEIGHBORHOOD/LOC	5417.00	1.00/

AREA TYPE	TOTAL GROSS AREA	PCT OF BASE	TOT ADJ AREA	SUBAREA MARKET VALUE
BAS	2,030	100	2,030	167,191
FGR	554	55	305	25,120
FOP	240	30	72	5,930
PTO	152	5	8	659
TOTALS	2,976		2,415	198,899

MARKET ADJUSTMENTS

TYPE	MDL	EFF. AREA	TOT ADJ PTS	EFF. BASE RATE	REPL. COST NEW	AYB	EYB	ECON	FNCT		NORM	% COND
0100	01	2,415	124.0371	102.95	248,624	2001	2001	0	0	0	20.00	80.00

1 SINGLE FAM – 100% - 2002 HX Base Yr 2002

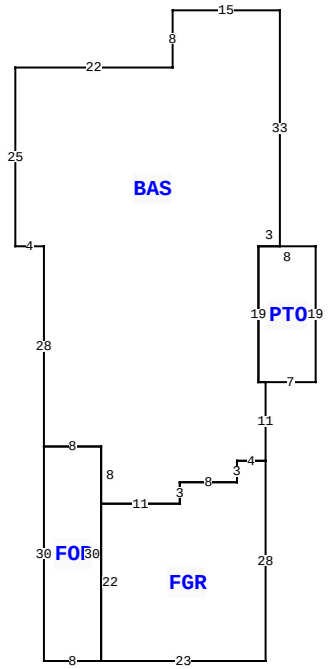

1785 SW PALOMA CT, LAKE CITY

BLD DATE		LGL DATE	
XF DATE		LAND DATE	04/27/2022 MLU
INC DATE		AG DATE	

VALUATION SUMMARY

VALUATION BY		STANDARD
Tax Group: 1	Tax Dist:	
BUILDING MARKET VALUE		198,899
TOTAL MARKET OB/XF VALUE		660
TOTAL LAND VALUE - MARKET		15,000
TOTAL MARKET VALUE		214,559
SOH/AGL Deduction		50,797
ASSESSED VALUE		163,762
TOTAL EXEMPTION VALUE	HX HB	50,000
BASE TAXABLE VALUE		113,762
TOTAL JUST VALUE		214,559
NCON VALUE		0
INCOME VALUE		
PREVIOUS YEAR MKT VALUE		

PERMIT NUM	DESCRIPTION	AMT	ISSUED
1840	SFR	480	10/24/2000

SALES DATA

OFF RECORD Number	DATE	TYPE INST	Q U /	V I /	RSN CD	SALE PRICE
1404/1861	1/29/2020	LE	U	I	14	100
GRANTOR: F L JR & MARIE KENNON						
GRANTEE: LAURA HUNTER & CLAR						
0922/0900	3/02/2001	WD	Q	I		168,000
GRANTOR: COLUMBIA INVESTORS LL						
GRANTEE: F L JR & MARIE KENN						

BUILDING NOTES

BUILDING DIMENSIONS

BAS= W15 S8 W22 S25 E4 S28 FOP= S30 E8 N30 W8$ E8 S8 FGR= S22 E23 N28 W4 S3 W8 S3 W11$ E11 N3 E8 N3 E4 N11 PTO= E7 N19 W8 S19 E1$ W1 N19 E3 N33$.

EXTRA FEATURES

LN	OB/XF CODE	DESCRIPTION	BLD	CAP	L	W	UNITS	UT	Adj R	ADJ UNIT PRICE	ORIG COND	YEAR ON	YEAR ACTUAL	Q	% COND	OB/XF MKT VALUE	NOTES
1	0166	CONC,PAVMT	0	100	0	0	440.00	UT	1.50	1.50	100	2001	2001	3	100	660	

LAND DESCRIPTION

TOTAL OB/XF 660

LN	USE CODE	LAND USE DESCRIPTION	CAP	RD	LOC ZONE	FRONT	DEPTH	TOT LND UTS	UNIT TYPE	DT	DPTH FACT	% COND	TOT ADJ	UNIT PRICE	ADJ UNIT PRICE	LAND VALUE	OTHER ADJUSTMENTS AND NOTES	YEAR	DENSITY	DECL	FRZ	YR	CONSRV
1	0100	SFR	100			42.00	104.00	1.00	LT		1.00	1.00	1.00	15,000.00	15,000.00	15,000							

REVIEW DATE 09/30/2016 BY DFRP Total Acres: 0.10 Total Land Value: 15,000 Market: 0 Agricultural: 0 Common: 15,000 PRINTED 02/22/2023