GENERAL NOTES

1. AREAS OF BLOCK ABV. MASONRY OPENINGS ARE TO BE GROUTED SOLID TO TIE BEAM.
2. (1) #5 REBAR IN TIE BEAM IS TO BE CONT. THROUGH OUT INCLUDING ABV. MASONRY OPENINGS. U.N.O.
3. ALL STANDARD LINTELS TO HAVE MIN. 4" BEARING EA. END ALL RECESSED LINTELS TO HAVE MIN. 8" BEARING EA. END
4. * LINTEL MINIMUM DEPTHS ARE CALLED OUT. IF CONTRACTOR INSTALLS INSTALLS A DEEPER LINTEL THAN INDICATED ON THE PLAN, DOING THIS INCREASES THE STRENGTH OF THE LINTEL.
5. (*) ANY LINTEL DEEPER THAN 32" HAS BEEN VERIFIED TO WORK AS A MIN. 32" FOR THE LOAD CONDITIONS. ANY LINTEL GREATER THAN 32" HAS A GREATER CAPACITY AND THEREFORE IS ADEQUATE FOR THE LOADS.

GENERAL CONCRETE LINTEL

APPROVED LINTELS:
CASTE-CRETE, QUALITY, LOTTS

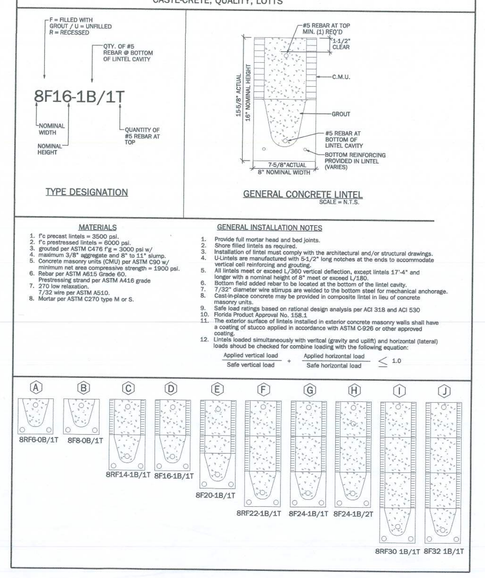

MATERIALS

1. f'c precast lintels = 3000 psi.
2. f'c prestressed lintels = 6000 psi.
3. grouted per ASTM C476 f'g = 3000 psi w/ ASTM C404 aggregate, slump 8" - 11" w/ pump.
5. Concrete masonry units (CMU) per ASTM C90 w/ minimum net area compressive strength = 1900 psi. Prestressing strand per ASTM A416 grade 270 low relaxation.
7. Rebar per ASTM A615.
8. Mortar per ASTM C270 type M or S.

GENERAL INSTALLATION NOTES

1. Provide full mortar head and bed joints.
2. Shim filled lintels as required.
3. Installation of lintel must comply with the architectural and/or structural drawings.
4. Cut the block units to provide 3-1/2" long notches at the ends to accommodate vertical rebar reinforcing and grouting.
5. All lintels meet or exceed L/360 vertical deflection, except lintels 17'-4" and longer meet or exceed L/240 vertical deflection.
6. Bottom field added rebar to be located at the bottom of the lintel cavity.
7. 7/32" diameter wire stirrups are welded to the bottom steel for mechanical anchorage.
8. Pumped concrete may be provided in composite lintel in lieu of concrete masonry units.
9. Safe load ratings based on national design analysis per ACI 318 and ACI 530 Allowable Stress Design (ASD).
10. The exterior surface of lintels installed in exterior concrete masonry walls shall have a coating of stucco applied in accordance with ASTM C926 or other approved methods.
12. Lintels loaded simultaneously with vertical (gravity and uplift) and horizontal (lateral) loads should be checked for combine loading with the following equation:

$$\frac{\text{Applied vertical load}}{\text{Safe vertical load}} + \frac{\text{Applied horizontal load}}{\text{Safe horizontal load}} \leq 1.0$$

SAFE LATERAL LOADS FOR 8" PRECAST & PRESTRESSED U-LINTELS

LENGTH	TYPE	SAFE LOAD PLF RUB	RFB	REINF. CMU*
4'-0" (48")	PRECAST	765	763	1365
7'-0" (90")	PRECAST	424	534	357

SAFE LATERAL LOADS FOR 8" PRECAST & PRESTRESSED U-LINTELS

LENGTH	TYPE	SAFE LOAD PLF RUB	RFB	REINF. CMU*
2'-10" (34")	PRECAST	1293	1642	2135
3'-4" (42")	PRECAST	1025	1024	1850
4'-0" (48")	PRECAST	765	763	1365
4'-6" (54")	PRECAST	592	591	1057
5'-4" (64")	PRECAST	411	411	734
5'-10" (70")	PRECAST	340	339	607
6'-6" (78")	PRECAST	507	721	483
7'-6" (90")	PRECAST	424	534	357
9'-4" (112")	PRECAST	326	512	227
10'-6" (126")	PRECAST	284	401	178
11'-4" (136")	PRECAST	260	452	152
12'-0" (144")	PRECAST	244	402	135
13'-4" (160")	PRECAST	217	324	109
14'-0" (168")	PRECAST	205	293	98
14'-8" (176")	PRESTRESSED	N.R.	284	89
15'-4" (184")	PRESTRESSED	N.R.	259	82
17'-4" (208")	PRESTRESSED	N.R.	194	63
19'-4" (232")	PRESTRESSED	N.R.	148	51
21'-4" (256")	PRESTRESSED	N.R.	125	42
22'-0" (264")	PRESTRESSED	N.R.	116	39
24'-0" (288")	PRESTRESSED	N.R.	91	33

SAFE GRAVITY LOADS FOR 8" PRECAST & PRESTRESSED U-LINTELS

LENGTH	TYPE	RUB	SAFE LOAD - POUNDS PER LINEAR FOOT							
			8FB-0B	8F12-0B	8F14-0B	8F16-0B	8F20-0B	8F24-0B	8F28-0B	8F32-0B
			8FB-1B	8F12-1B	8F14-1B	8F16-1B	8F20-1B	8F24-1B	8F28-1B	8F32-1B
4'-0" (48")	PRECAST	1966	2561	2751	3820	4890	5961	7034	8107	
			2695	4660	6113	7567	8974	10394	11809	
7'-0" (90")	PRECAST	743	1011	1729	2632	2205	2698	3191	3683	
			1051	1729	2841	3898	5401	8447	6472	

SAFE UPLIFT LOADS FOR 8" PRECAST & PRESTRESSED U-LINTELS

LENGTH	TYPE	SAFE LOAD - POUNDS PER LINEAR FOOT					
		8FB-0B	8F12-0B	8F14-0B	8F20-0B	8F24-0B	8F32-0B
		8FB-27	8F12-27	8F14-27	8F20-27	8F24-27	8F32-27
2'-10" (34")	PRECAST	1972	3175	4460	2747	5034	8321
		1972	3175	4460	2747	7614	8321
3'-4" (42")	PRECAST	1369	2524	3547	4369	5591	6813
		1369	2524	3547	4369	5591	6813
4'-0" (48")	PRECAST	1363	2192	3079	3966	4853	6740
		1363	2192	3079	3966	4853	6740
4'-6" (54")	PRECAST	1307	1949	2724	3508	4292	5077
		1307	1949	2724	3508	4292	5077
5'-4" (64")	PRECAST	1018	1632	2296	2949	3607	4265
		1018	1632	2296	2949	3607	4265
5'-10" (70")	PRECAST	909	1492	2093	2694	3295	3897
		909	1492	2093	2694	3295	3897
6'-6" (78")	PRECAST	833	1340	1880	2419	2959	3498
		833	1340	1880	2419	2959	3498
7'-6" (90")	PRECAST	727	1161	1634	2102	2571	3039
		727	1161	1634	2102	2571	3039
9'-4" (112")	PRECAST	591	880	1133	1471	1810	2150
		591	831	1326	1705	2084	2463
10'-6" (126")	PRECAST	530	552	914	1187	1458	1732
		550	486	1182	1526	1869	2204
11'-4" (136")	PRECAST	474	485	798	1034	1272	1510
		484	598	1028	1322	1738	2053
12'-0" (144")	PRECAST	470	441	723	938	1153	1368
		470	545	928	1249	1649	1948
13'-4" (160")	PRECAST	418	373	606	785	962	1141
		428	455	776	1145	1444	1718
14'-0" (168")	PRECAST	394	346	559	722	887	1052
		418	426	709	1005	1424	1684
14'-8" (176")	PRESTRESSED	339	323	519	671	823	976
		248	390	655	948	1324	1625
15'-4" (184")	PRESTRESSED	224	302	483	626	767	909
		236	364	609	887	1124	1382
17'-4" (208")	PRESTRESSED	187	251	404	520	637	754
		192	303	508	732	993	1208
19'-4" (232")	PRESTRESSED	162	222	347	446	546	646
		166	261	424	616	831	1007
21'-4" (256")	PRESTRESSED	142	198	306	393	480	567
		142	230	369	531	713	865
22'-0" (264")	PRESTRESSED	137	192	295	378	461	545
		124	175	287	397	458	497
24'-0" (288")	PRESTRESSED	124	200	318	450	600	726

SAFE UPLIFT LOADS FOR 8" PRECAST & PRESTRESSED U-LINTELS

LENGTH	TYPE	SAFE LOAD - POUNDS PER LINEAR FOOT					
		8FB-1T	8F12-1T	8F14-1T	8F20-1T	8F24-1T	8F32-1T
		8FB-27	8F12-27	8F14-27	8F20-27	8F24-27	8F32-27
2'-10" (34")	PRECAST	1972	3175	4460	2747	5034	8321
		1972	3175	4460	2747	7614	8321
3'-4" (42")	PRECAST	1369	2524	3547	4369	5591	6813
		1369	2524	3547	4369	5591	6813
4'-0" (48")	PRECAST	1363	2192	3079	3966	4853	6740
		1363	2192	3079	3966	4853	6740
4'-6" (54")	PRECAST	1307	1949	2724	3508	4292	5077
		1307	1949	2724	3508	4292	5077
5'-4" (64")	PRECAST	1018	1632	2296	2949	3607	4265
		1018	1632	2296	2949	3607	4265
5'-10" (70")	PRECAST	909	1492	2093	2694	3295	3897
		909	1492	2093	2694	3295	3897
6'-6" (78")	PRECAST	833	1340	1880	2419	2959	3498
		833	1340	1880	2419	2959	3498
7'-6" (90")	PRECAST	727	1161	1634	2102	2571	3039
		727	1161	1634	2102	2571	3039
9'-4" (112")	PRECAST	591	880	1133	1471	1810	2150
		591	831	1326	1705	2084	2463
10'-6" (126")	PRECAST	530	552	914	1187	1458	1732
		550	486	1182	1526	1869	2204
11'-4" (136")	PRECAST	474	485	798	1034	1272	1510
		484	598	1028	1322	1738	2053
12'-0" (144")	PRECAST	470	441	723	938	1153	1368
		470	545	928	1249	1649	1948
13'-4" (160")	PRECAST	418	373	606	785	962	1141
		428	455	776	1145	1444	1718
14'-0" (168")	PRECAST	394	346	559	722	887	1052
		418	426	709	1005	1424	1684
14'-8" (176")	PRESTRESSED	339	323	519	671	823	976
		248	390	655	948	1324	1625
15'-4" (184")	PRESTRESSED	224	302	483	626	767	909
		236	364	609	887	1124	1382
17'-4" (208")	PRESTRESSED	187	251	404	520	637	754
		192	303	508	732	993	1208
19'-4" (232")	PRESTRESSED	162	222	347	446	546	646
		166	261	424	616	831	1007
21'-4" (256")	PRESTRESSED	142	198	306	393	480	567
		142	230	369	531	713	865
22'-0" (264")	PRESTRESSED	137	192	295	378	461	545
		124	175	287	397	458	497
24'-0" (288")	PRESTRESSED	124	200	318	450	600	726

SAFE GRAVITY LOADS FOR 8" PRECAST & PRESTRESSED U-LINTELS

LENGTH	TYPE	RUB	SAFE LOAD - POUNDS PER LINEAR FOOT							
			8FB-0B	8F12-0B	8F14-0B	8F20-0B	8F24-0B	8F28-0B	8F32-0B	
			8FB-1B	8F12-1B	8F14-1B	8F20-1B	8F24-1B	8F28-1B	8F32-1B	
2'-10" (34")	PRECAST	2231	3069	4685	6113	7547	8974	10394	11809	
			3069	4685	6113	7547	8974	10394	11809	
3'-4" (42")	PRECAST	2231	3069	3719	5143	6607	8054	9502	10951	
			3069	4685	6113	7547	8974	10394	11809	
4'-0" (48")	PRECAST	1966	2561	2751	3820	4890	5961	7034	8107	
			2695	4685	6113	7547	8974	10394	11809	
4'-6" (54")	PRECAST	1599	1969	2110	2931	3753	4576	5402	6224	
			2189	4379	6113	7547	8671	10294	11809	
5'-4" (64")	PRECAST	1217	1349	1458	1999	2560	3123	3686	4249	
			1803	3890	5305	7547	7942	8775	10127	
5'-10" (70")	PRECAST	1062	1165	1173	1621	2090	2569	3069	3470	
			1453	2622	4500	7148	6956	7181	8329	
6'-6" (78")	PRECAST	908	1238	2177	3480	3031	3767	4361	5967	
			1238	2177	3480	3031	8160	10394	8837	
7'-6" (90")	PRECAST	743	1011	1729	2632	2205	2698	3191	3683	
			1011	1729	2841	3898	5401	8447	6472	
9'-4" (112")	PRECAST	554	699	1160	1625	2564	3480	2818	3102	
			753	1245	1944	2564	3486	4705	4209	
10'-6" (126")	PRECAST	475	535	890	1247	2093	2777	2163	2526	
			443	1055	1555	2093	2781	3445	4724	
11'-4" (136")	PRECAST	362	582	945	1366	1846	2423	3127	4008	
			582	945	1366	1846	2423	3127	4008	
12'-0" (144")	PRECAST	337	540	873	1254	1684	2193	2805	3555	
			540	873	1254	1684	2193	2805	3555	
13'-4" (160")	PRECAST	296	471	755	1075	1428	1838	2316	2883	
			471	755	1075	1428	1838	2316	2883	
14'-0" (168")	PRECAST	279	424	706	1002	1326	1697	2137	2650	
			442	706	1002	1326	1697	2137	2650	
14'-8" (176")	PRESTRESSED	N.R.	NR	NR	NR	NR	NR	NR	NR	
			459	783	1376	1962	2243	2517	2713	
15'-4" (184")	PRESTRESSED	N.R.	NR	NR	NR	NR	NR	NR	NR	
			412	710	1250	1753	2038	2320	2513	
17'-4" (208")	PRESTRESSED	N.R.	NR	NR	NR	NR	NR	NR	NR	
			308	548	950	1326	1609	1849	2047	
19'-4" (232")	PRESTRESSED	N.R.	NR	NR	NR	NR	NR	NR	NR	
			233	420	750	1017	1282	1513	1716	
21'-4" (256")	PRESTRESSED	N.R.	NR	NR	NR	NR	NR	NR	NR	
			181	340	598	845	1114	1339	1468	
22'-0" (264")	PRESTRESSED	N.R.	NR	NR	NR	NR	NR	NR	NR	
			NR	NR	NR	NR	NR	NR	NR	
24'-0" (288")	PRESTRESSED	N.R.	128	255	450	654	884	1092	1223	

(#) THE NUMBERS IN PARENTHESIS ARE PERCENT REDUCTIONS FOR GR40 FIELD ADDED REBAR.

8" PRECAST W/ 2" RECESS DOOR U-LINTELS

GRAVITY

LENGTH	TYPE	RBU6	8RF6-0B / 8RF6-1B	8RF7-0B / 8RF7-1B	8RF14-0B / 8RF14-1B	8RF16-0B / 8RF16-1B	8RF22-0B / 8RF22-1B	8RF25-0B / 8RF25-1B	8RF30-0B / 8RF30-1B
4'-0" (52")	PRECAST	1489	1591	2053	2982	3954	4929	5904	6880
			1827	3412	4982	6472	7947	9416	10878
4'-6" (54")	PRECAST	1357	1449	2782	2714	3600	4487	5375	6264
			1782	3412	4982	6472	7947	9416	10878
5'-8" (68")	PRECAST	783	832	1602	1559	2058	2564	3075	3587
			1153	2142	4074	6472	6316	5814	6839
5'-10" (70")	PRECAST	755	779	1500	1469	1924	2400	2876	3352
			1103	2051	3811	6472	6316	5420	6411
6'-8" (80")	PRECAST	822	907	1877	2033	2576	3225	3875	4525
			907	1877	2933	4100	4750	5177	6707
7'-6" (90")	PRECAST	663	761	1577	2252	1958	2457	2944	3430
			764	1577	2329	2809	3492	4624	5132
9'-4" (110")	PRECAST	371	420	814	1293	1897	1587	1814	1866
			535	928	1497	2179	2418	3395	2873

8" PRECAST W/ 2" RECESS DOOR U-LINTELS

UPLIFT

*REDUCE VALUES FOR GRADE 40 FIELD REBAR

LENGTH	TYPE	8RF6-27 / 8RF6-27	8RF7-27 / 8RF7-27	8RF14-27 / 8RF14-27	8RF16-27 / 8RF16-27	8RF22-27 / 8RF22-27	8RF25-27 / 8RF25-27	8RF30-27 / 8RF30-27	RBU6	RBF6
4'-0" (52")	PRECAST	1244	1573	2413	3240	4112	4967	5825	952	952
		1244	1519	2359	3178	4008	4850	5696		
4'-6" (54")	PRECAST	1192	1507	2311	3121	3937	4756	5577	833	833
		1192	1455	2260	3056	3857	4643	5453		
5'-8" (68")	PRECAST	924*	1172	1795	2423	3057	3689	4325	501	501
		924	1132	1741	2357	2978	3601	4230		
5'-10" (70")	PRECAST	894*	1138	1742	2352	2965	3581	4198	469	469
		894	1099	1690	2288	2891	3497	4106		
6'-8" (80")	PRECAST	778	882	1513	2042	2573	3107	3642	830	1100
		778	956	1468	1987	2509	3031	3563		
7'-6" (90")	PRECAST	688	697	1319	1819	2280	2753	3227	710	941
		688	849	1302	1762	2225	2690	3157		
9'-8" (116")	PRECAST	515*	633	908	1123	1413	1704	1992	516	614
		553	527	1009	1369	1728	2088	2450		

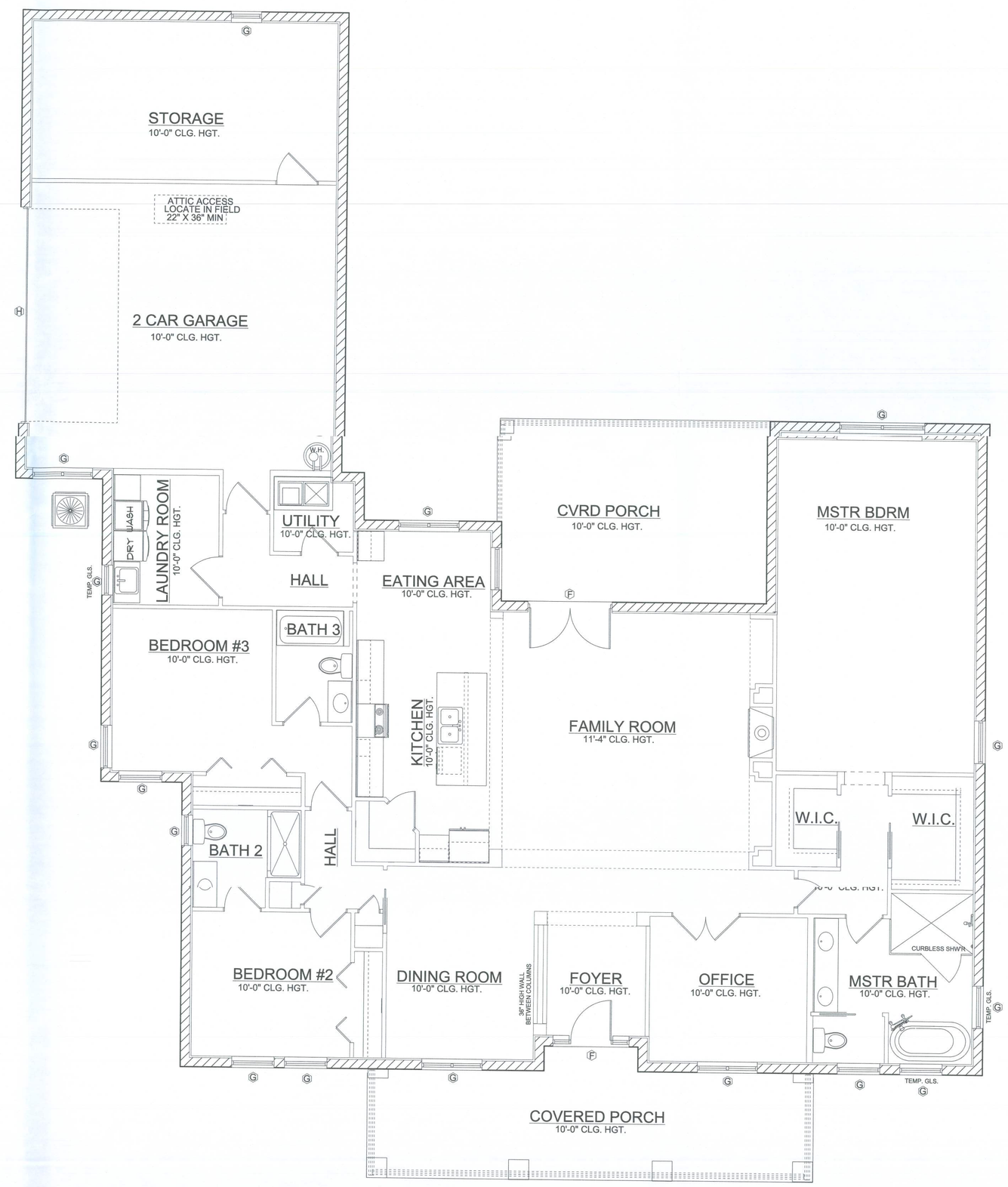

LINTEL PLAN NOTES:

1- THIS PLAN IS TO BE USED FOR STRUCTURAL INFORMATION ONLY.
2- THE NUMBER OF COURSES OF MASONRY REQUIRED BETWEEN THE LINTEL & THE BOND BEAM SHOULD BE COORDINATED WITH THE ELEVATION DRAWINGS
3- THE CONTRACTOR IS RESPONSIBLE FOR COORDINATING THE PROPER LINTEL HEIGHT.

LINTEL PLAN

SCALE: 1/4"=1'-0"

Digital Signature

05/31/2021

Engineer:

"THIS PLAN HAS BEEN DESIGNED IN ACCORDANCE WITH THE 2020 FLORIDA BUILDING CODE 7th EDITION

TOMAS PONCE HIGUERE
367 MEDALLION PLACE CHULUOTA, FL. 32766
PHONE (407) 484-0037
TOMAS PONCE
FLPE # 50068

DATE: May 30, 2021

Designer:

DESIGN & BUILDING CONCEPTS, LLC
Specializing in Remodeling Residential Design & New Custom Home Designs
407 877 6696
cell: 407.970.6974
johnscronk@gmail.com
Don't Relocate... Renovate

Builder:

Plan Issue Date: May 30, 2021

Revisions:
1
2
3
4
5

Job Information:

BUILDER NOTICE:
It is the intent of the designer that these plans are accurate and are clear enough for the licensed professional to construct this project. In the event that something is unclear or needs clarification, Stop, and call the designer listed on this title page. It is the responsibility of the licensed professional that is constructing this project to fully review these documents before construction begins and any and all corrections if needed to be made, before any work is done

Job Information:

Residence of: MR. & MRS.WILLIAMS
Plan Name: CUSTOM HOME
Elevation:
Builder Job Number:
Lot:
Address:
Block:

OSBC Reference No.
2021-0316

Sheet: L-1 Of: 9

PROSOCO

R•Guard

AIR & WATER BARRIERS

CMU/CIP Concrete Rough Opening - C1.1

CMU/Cast-in-Place Concrete Wall Construction

Field of wall – Fill small voids and cracks (up to 1/2-inch) in the CMU surface with **FastFlash or Joint & Seam Filler**. Use a dry joint knife or trowel to press and spread 1 inch beyond each side to a thickness of 20-30 mils.

Repair larger cracks or voids with mortar.

Best practice rough opening – Apply a thick bead of **FastFlash** in each corner and in a zigzag pattern over the concrete block inside the rough opening and wall face surrounding the rough opening. Use a dry joint knife, trowel or chipper brush to spread the wet product to protect the rough opening with a seamless flashing membrane that extends no more than 1 inch over the face of the wall. Apply additional **FastFlash** as needed to create an opaque, monolithic flashing membrane free of voids or pinholes. Allow to skin over.

Spray or roller apply the selected R-Guard air and water-resistive barrier over the prepared wall. Apply sufficient product to cover the entire face of the structural wall.

Wood buck – If wood bucks are not already installed, apply two thick beads of **FastFlash** or **Joint & Seam Filler** along the perimeter faces of the wood buck before attaching it to the structure while still wet. Install anchor bolts.

After installation of wood buck, spot and cover the installed heads of the anchor bolts. Apply a thick bead of **FastFlash** or **Joint & Seam Filler** to all inside corners of the wood buck. Use a dry joint knife or trowel to press and spread 1 inch beyond each side to a thickness of 20-30 mils.

Apply a thick bead of **FastFlash** or **Joint & Seam Filler** to the perimeter joint between the wood buck and the CMU wall. Use a dry trowel or spatula to tool and seal the joint. Create a profile that directs bulk water away from the joint. Allow **Joint & Seam Filler** to skin over.

Apply a thick bead of **FastFlash** over the inside of the wood buck, extending it onto the wall surrounding the rough opening. Use a dry joint knife, chip brush or trowel to spread the wet product to create a seamless flashing membrane. To ensure the wood buck is adequately protected, make sure the membrane extends no more than 1 inch over the face of the wall. Apply additional **FastFlash** as needed to create an opaque, monolithic flashing membrane free of voids or pinholes.

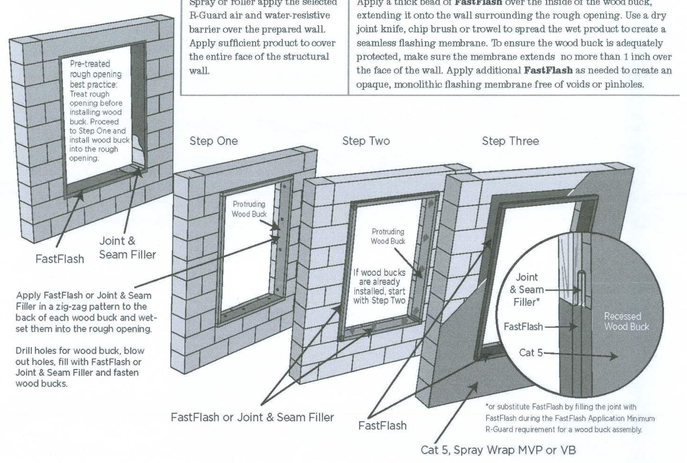

©PROSOCO 062216

PROSOCO

R•Guard

AIR & WATER BARRIERS

Sheathing Wall Seam - S1.1

Sheathing Wall Construction with gypsum, plywood or OSB sheathing.

Spot all over-driven, or improperly installed fasteners with **FastFlash** or **Joint & Seam Filler**.

Apply a thick bead of **FastFlash** or **Joint & Seam Filler** to all sheathing joints.

Use a dry joint knife or trowel to spread 1 inch beyond the seam on each side to a thickness of 20-30 mils.

Follow sheathing manufacturer recommendations to repair joints or gaps greater than 1 inch.

Apply the selected R-Guard air and water-resistive barrier over the prepared sheathing wall.

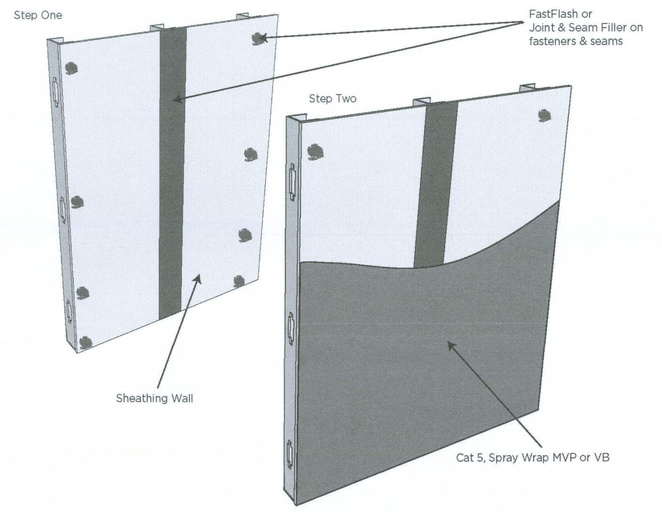

PROSOCO

R•Guard

AIR & WATER BARRIERS

Inside/Outside Wall Corners - S2.1

Sheathing Wall Construction with gypsum, plywood or OSB sheathing.

Consolidate and seal the raw, cut gypsum board edges within the inside/outside wall corners by brushing on a thin uniform coat of **GypPrime.**

Apply **FastFlash** or **Joint & Seam Filler** to all inside corners, fill outside corner joint with **Joint & Seam Filler**. Use a dry joint knife or trowel to spread 1 inch beyond seam and outer cut edge to a thickness of 20-30 mils.

Apply the selected R-Guard air and water-resistive barrier over the prepared sheathing wall.

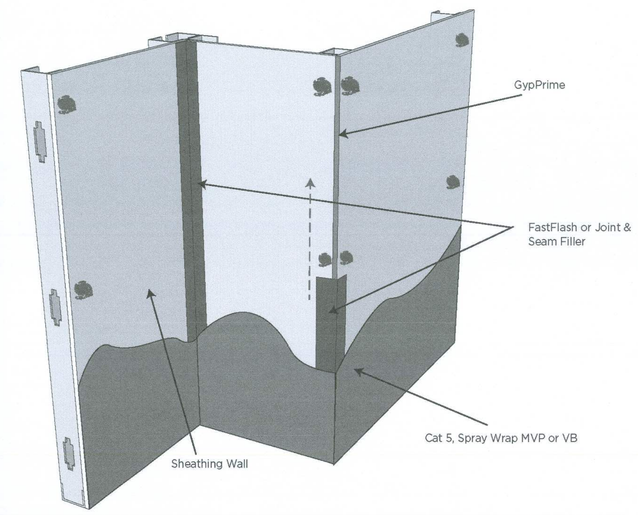

PROSOCO

R•Guard

AIR & WATER BARRIERS

Pipe & Mechanical Penetrations - S3.1

Sheathing Wall Construction with gypsum, plywood or OSB sheathing.

Mechanically secure loose penetrations at the interior of the wall before detailing. Install non-gassing polyethylene foam backer rod backed by spray foam around electrical fixtures, conduit or plumbing to form a back dam.

Apply a thick bead of **FastFlash** or **Joint & Seam Filler** around the penetration. Use a dry trowel or spatula to tool and seal the joint. Create a joint profile that directs bulk water away from the opening.

Apply the selected R-Guard air and water-resistive barrier over the prepared sheathing. Use a chipper brush to cover the **FastFlash** or **Joint & Seam Filler** that surrounds any mechanical penetrations with selected barrier membrane. Apply suffficient product to cover the entire face of the structural wall and all exposed **FastFlash** or **Joint & Seam Filler**.

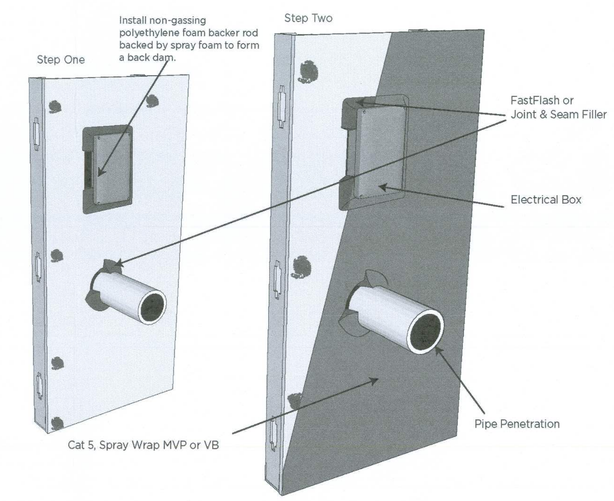

PROSOCO

R•Guard

AIR & WATER BARRIERS

Rough Opening Using One Product - S4.1A

Sheathing Wall Construction with gypsum, plywood or OSB sheathing.

Apply a thick bead of **FastFlash** to all inside corners, joints and seams, and framing surfaces within the rough opening at 12-15 mils.

Apply a thick bead of **FastFlash** over the framing inside the rough opening and the structural wall surrounding the rough opening. Use a dry joint knife, trowel or chipper brush to spread the wet product to create a seamless flashing membrane which protects the rough opening and extends 4-6 inches over the face of the structural wall. When using a flanged window, extend **FastFlash** 2 inches beyond the edge of the window flange. Apply additional **FastFlash** as needed to create an opaque, monolithic flashing membrane free of voids or pinholes.

Apply the selected R-Guard air and water-resistive barrier over the prepared sheathing. Apply sufficient product to cover the entire face of the structural wall.

When stud framing is used in lieu of track, cover knockout with breakmetal and seal edges with **FastFlash** (see insert below).

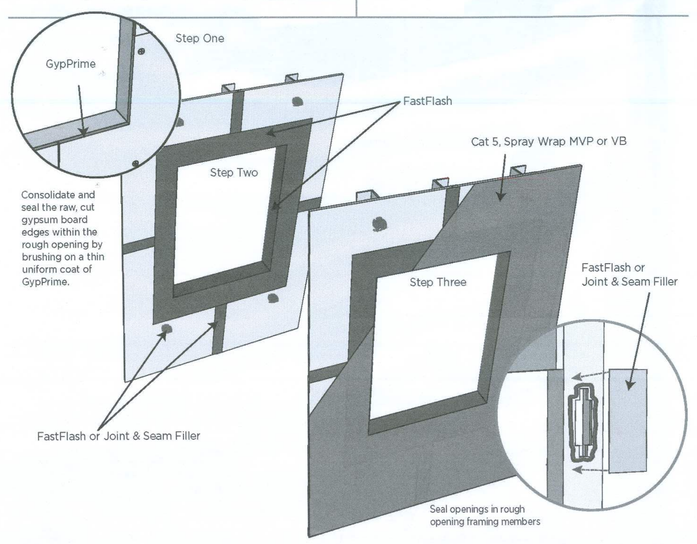

PROSOCO

R•Guard

AIR & WATER BARRIERS

Rough Opening Using Two Products - S4.1B

Sheathing Wall Construction with gypsum, plywood or OSB sheathing.

Apply a thick bead of **Joint & Seam Filler** to all inside corners, joints and seams within the rough opening. Use a dry joint knife or trowel to spread 1 inch beyond the seam on each side to a thickness of 20-30 mils.

Apply a thick bead of **FastFlash** over the framing inside the rough opening and the structural wall surrounding the rough opening. Use a dry joint knife, trowel or chipper brush to spread the wet product to create a seamless flashing membrane which protects the rough opening and extends 4-6 inches over the face of the structural wall. When using a flanged window, extend **FastFlash** 2 inches beyond the edge of the window flange. Apply additional **FastFlash** as needed to create an opaque, monolithic flashing membrane free of voids or pinholes.

Spray or roller apply the selected R-Guard air and water-resistive barrier over the prepared sheathing. Apply sufficient product to cover the entire face of the structural wall.

When stud framing is used in lieu of track, cover knockout with breakmetal and seal edges with **FastFlash** (see insert below).

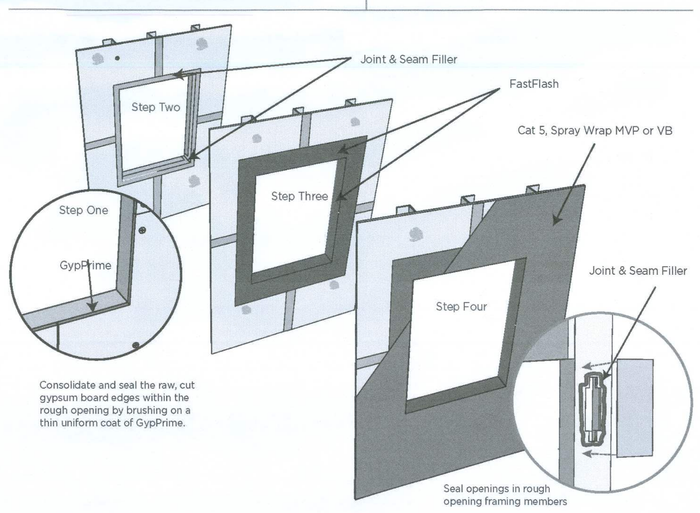

PROSOCO

R•Guard

AIR & WATER BARRIERS

Window Head Using SS ThruWall Flashing - S5.1

Sheathing Wall Construction with gypsum, plywood or OSB sheathing.

Install the window "plumb, level and square" into the rough opening prepared with **Joint & Seam Filler** and/or **FastFlash**.

Use **AirDam** as the interior air sealant to ensure compatibility with the treated rough opening and create a long-lasting, weather-tight seal (see S7.1).

Apply a thick bead of **FastFlash** or **Joint & Seam Filler** across the top of the rough opening. Wet-set the R-Guard **SS ThruWall** flashing. Mechanically fasten the **SS ThruWall** flashing.

Apply a bead of **FastFlash** or **Joint & Seam Filler** to the top edge of the **SS ThruWall** flashing. Use a dry trowel or spatula to tool and seal the joint. Create a profile that directs bulk water away from the joint. Allow joint to skin over.

To transition from the air- and water-resistive barrier to the **SS ThruWall** flashing, apply a bead of **FastFlash** immediately above and below the top edge of the **SS ThruWall** flashing. Use a dry joint knife or trowel to spread the wet product to create a seamless counter-flashing membrane which directs bulk water from the air- and water-resistive barrier to the **SS ThruWall** flashing: Apply additional **FastFlash** as needed to create an opaque, monolithic flashing membrane free of voids or pinholes.

Note: Trade sequencing may make wet-setting impractical and it is not required.

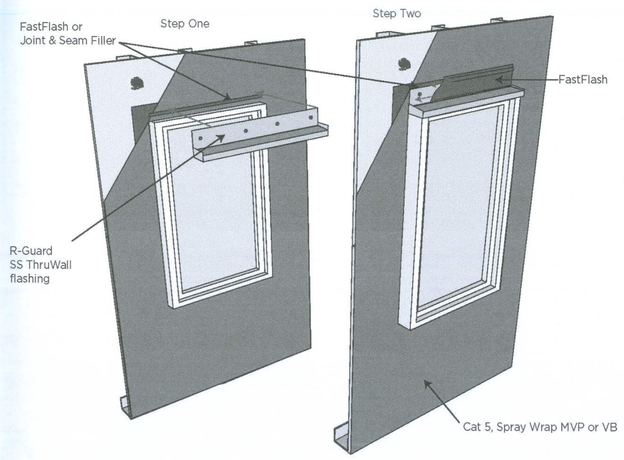

PROSOCO

R•Guard

AIR & WATER BARRIERS

Sealing Window Flange - S6.1

Sheathing Wall Construction with gypsum, plywood, OSB sheathing or CMU openings with wood buck.

Install the window "plumb, level and square" into the rough opening prepared with **Joint & Seam Filler** and **FastFlash**.

If the manufacturer's instructions say to "wet-set" the exterior window flange, install a continuous bead of **AirDam, Joint & Seam Filler or FastFlash** on the back of the flanges along the top (head) and sides (jambs) of the window – making sure to leave the sill flange free of **AirDam, Joint & Seam Filler or FastFlash** sealant [illegible] for drainage capabilities. Place the window in the prepared rough opening. Install fasteners as directed by the window manufacturer.

Use **AirDam** as the interior air sealant to ensure compatibility with the treated rough opening and create a long-lasting, weather-tight seal.

Limit counter flashing to the top (head) and sides (jambs) of the window. Do not seal the window bottom (sill) or obstruct weeps.

To seal the window flange, apply a thick bead of **FastFlash or Joint & Seam Filler** over the outer edge of the window flange.

Apply a second thick bead over the structural wall adjacent to the window flange at the window head and jambs. Use a dry joint knife, trowel or chipper brush to spread the wet product to create a seamless membrane, directing bulk water away from the window and the rough opening. Apply additional **FastFlash or Joint & Seam Filler** as needed to create an opaque, monolithic membrane free of voids or pinholes.

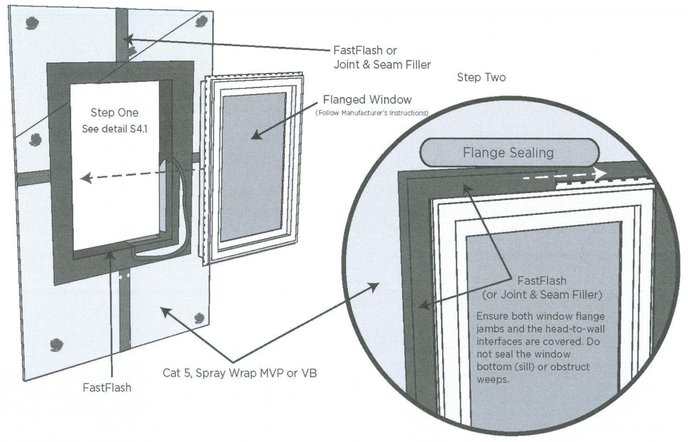

©PROSOCO 020916

Digital Signature

05/31/2021

Engineer:

"THIS PLAN HAS BEEN DESIGNED IN ACCORDANCE WITH THE 2020 FLORIDA BUILDING CODE 7th EDITION"

TOMAS PONCE MACEIPE

367 MEDALLION PLACE CHULUOTA, FL. 32766

PHONE (407) 484-0037

TOMAS PONCE

FLPE # 50068

DATE: May 30, 2021

Designer:

DESIGN & BUILDING CONCEPTS, LLC

Residential Design & New Custom Home Designs

407.877.6696

cell:407.370.4974

johnscronk@gmail.com

Don't Relocate... Renovate

Builder:

Plan Issue Date: May 30, 2021

Revisions:

1

2

3

4

5

Job Information:

BUILDER NOTICE:

It is the intent of the designer that these plans are complete and are clear enough for the licensed professional to construct this project. In the event that something is unclear or needs clarification, Stop, and call the designer listed on this title page. It is the responsibility of the licensed professional that is constructing this project to fully review these documents before construction begins and any and all corrections if needed to be made, before any work is done

Job Information:

Residence of: MR. & MRS.WILLIAMS

Plan Name: CUSTOM HOME

Elevation:

Builder Job Number:

Lot:

Block:

Address:

D&BC Reference No.

2021-0316

Sheet: WP-01 Of: 9