DATE 04/07/2004

Columbia County Building Permit

This Permit Expires One Year From the Date of Issue

PERMIT
000021706

APPLICANT AARON SIMQUE PHONE 867.0692

ADDRESS RT. 9, BOX 785-33 LAKE CITY FL 32024

OWNER AARON SIMQUE PHONE 755.0841

ADDRESS 139 SW STAFFORD COURT LAKE CITY FL 32024

CONTRACTOR AARON SIM QUE HOMES,INC. PHONE 755.0841

LOCATION OF PROPERTY C-247-S TO CALLAHAN RD.,L, GO TO CALLAWAY S/D, PHASE 3, STAFFORD CRT., 2ND TO LAST LOT BEFORE CUL-DE-SAC ON R.

TYPE DEVELOPMENT SFD & UTILITY ESTIMATED COST OF CONSTRUCTION 105300.00

HEATED FLOOR AREA 2106.00 TOTAL AREA 2828.00 HEIGHT 22.00 STORIES 1

FOUNDATION CONC WALLS FRAMED ROOF PITCH 8'12 FLOOR CONC

LAND USE & ZONING RSF-2 MAX. HEIGHT 35

Minimum Set Back Requirments: STREET-FRONT 25.00 REAR 15.00 SIDE 10.00

NO. EX.D.U. FLOOD ZONE XPP DEVELOPMENT PERMIT NO.

PARCEL ID 15-4S-16-03023-368 SUBDIVISION CALLAWAY

LOT 68 BLOCK PHASE 3 UNIT TOTAL ACRES .30

000000261	N	RR29003130		
Culvert Permit No.	Culvert Waiver	Contractor's License Number	Applicant/Owner/Contractor	
18"X32'MITERED	04-0389-N	BLK	JDK	N
Driveway Connection	Septic Tank Number	LU & Zoning checked by	Approved for Issuance	New Resident

COMMENTS: 1 FOOT ABOVE ROAD.

Check # or Cash 1736

FOR BUILDING & ZONING DEPARTMENT ONLY

Temporary Power _____ date/app. by Foundation _____ date/app. by Monolithic _____ date/app. by (footer/Slab)

Under slab rough-in plumbing _____ date/app. by Slab _____ date/app. by Sheathing/Nailing _____ date/app. by

Framing _____ date/app. by Rough-in plumbing above slab and below wood floor _____ date/app. by

Electrical rough-in _____ date/app. by Heat & Air Duct _____ date/app. by Peri. beam (Lintel) _____ date/app. by

Permanent power _____ date/app. by C.O. Final _____ date/app. by Culvert _____ date/app. by

M/H tie downs, blocking, electricity and plumbing _____ date/app. by Pool _____ date/app. by

Reconnection _____ date/app. by Pump pole _____ date/app. by Utility Pole _____ date/app. by

M/H Pole _____ date/app. by Travel Trailer _____ date/app. by Re-roof _____ date/app. by

BUILDING PERMIT FEE $ 530.00 CERTIFICATION FEE $ 14.14 SURCHARGE FEE $ 14.14

MISC. FEES $ .00 ZONING CERT. FEE $ 50.00 FIRE FEE $ WASTE FEE $

FLOOD ZONE DEVELOPMENT FEE $ CULVERT FEE $ 25.00 **TOTAL FEE** 633.28

INSPECTORS OFFICE CLERKS OFFICE CH

NOTICE: IN ADDITION TO THE REQUIREMENTS OF THIS PERMIT, THERE MAY BE ADDITIONAL RESTRICTIONS APPLICABLE TO THIS PROPERTY THAT MAY BE FOUND IN THE PUBLIC RECORDS OF THIS COUNTY. AND THERE MAY BE ADDITIONAL PERMITS REQUIRED FROM OTHER GOVERNMENTAL ENTITIES SUCH AS WATER MANAGEMENT DISTRICTS, STATE AGENCIES, OR FEDERAL AGENCIES.

"WARNING TO OWNER: YOUR FAILURE TO RECORD A NOTICE OF COMMENCEMENT MAY RESULT IN YOUR PAYING TWICE FOR IMPROVEMENTS TO YOUR PROPERTY. IF YOU INTEND TO OBTAIN FINANCING, CONSULT WITH YOUR LENDER OR AN ATTORNEY BEFORE RECORDING YOUR NOTICE OF COMMENCEMENT."

This Permit Must Be Prominently Posted on Premises During Construction

PLEASE NOTIFY THE COLUMBIA COUNTY BUILDING DEPARTMENT AT LEAST 24 HOURS IN ADVANCE OF EACH INSPECTION, IN ORDER THAT IT MAY BE MADE WITHOUT DELAY OR INCONVIENCE, PHONE 758-1008. THIS PERMIT IS NOT VALID UNLESS THE WORK AUTHORIZED BY IT IS COMMENCED WITHIN 6 MONTHS AFTER ISSUANCE.

The Issuance of this Permit Does Not Waive Compliance by Permittee with Deed Restrictions.

Columbia County
Building Permit Application

3/8/04

Date 3-4-04 #21706 Application No. 0403-20

Applicants Name & Address Aaron Singue Phone 867-0692
Rt 9 Box 785-33 Lake City FL. 32024
Owners Name & Address SAME Phone
Fee Simple Owners Name & Address (911) 139 SW Stafford Court 32024 Phone
Contractors Name & Address SAME Phone
Legal Description of Property Callaway Lot 68 PHASE 3 15-4S-16
Location of Property IN Callaway Subdivision off Brandford Hwy
Tax Parcel Identification No. 15-4S-16-03023-368 Estimated Cost of Construction $ 130,000.
Type of Development SF DWELLING Number of Existing Dwellings on Property 0
Comprehensive Plan Map Category RES LOW DENSITY Zoning Map Category RSF-2
Building Height 20' Number of Stories 1 Floor Area 2106 Total Acreage in Development 1/2
Distance From Property Lines (Set Backs) Front 55 Side 15 28/28 Rear 65 Street 55
Flood Zone X per plat Certification Date Development Permit N/A
Bonding Company Name & Address
Architect/Engineer Name & Address WILL MYERS / Mark Disaway
Mortgage Lenders Name & Address PEOPLES STATE BANK

Application is hereby made to obtain a permit to do the work and installations as indicated. I certify that no work or installation has commenced prior to the issuance of a permit and that all work will be performed to meet the standards of all laws regulating construction in this jurisdiction.

OWNERS AFFIDAVIT: I hereby certify that all the foregoing information is accurate and all work will be done in compliance with all applicable laws regulating construction and zoning.

WARNING TO OWNER: YOUR FAILURE TO RECORD A NOTICE OF COMMENCMENT MAY RESULT IN YOU PAYING TWICE FOR IMPROVEMENTS TO YOUR PROPERTY. IF YOU INTEND TO OBTAIN FINANCING, CONSULT WITH YOUR LENDER OR ATTORNEY BEFORE RECORDING YOUR NOTICE OF COMMENCEMENT.

Owner or Agent (including contractor)

Contractor

RB2900 3130

Contractor License Number

STATE OF FLORIDA
COUNTY OF COLUMBIA
Sworn to (or affirmed) and subscribed before me
this _____ day of _____ by _____

Personally Known _____ OR Produced Identification

STATE OF FLORIDA
COUNTY OF COLUMBIA
Sworn to (or affirmed) and subscribed before me
this _____ day of _____ by _____

Personally Known _____ OR Produced Identification

Culvert #261

#234

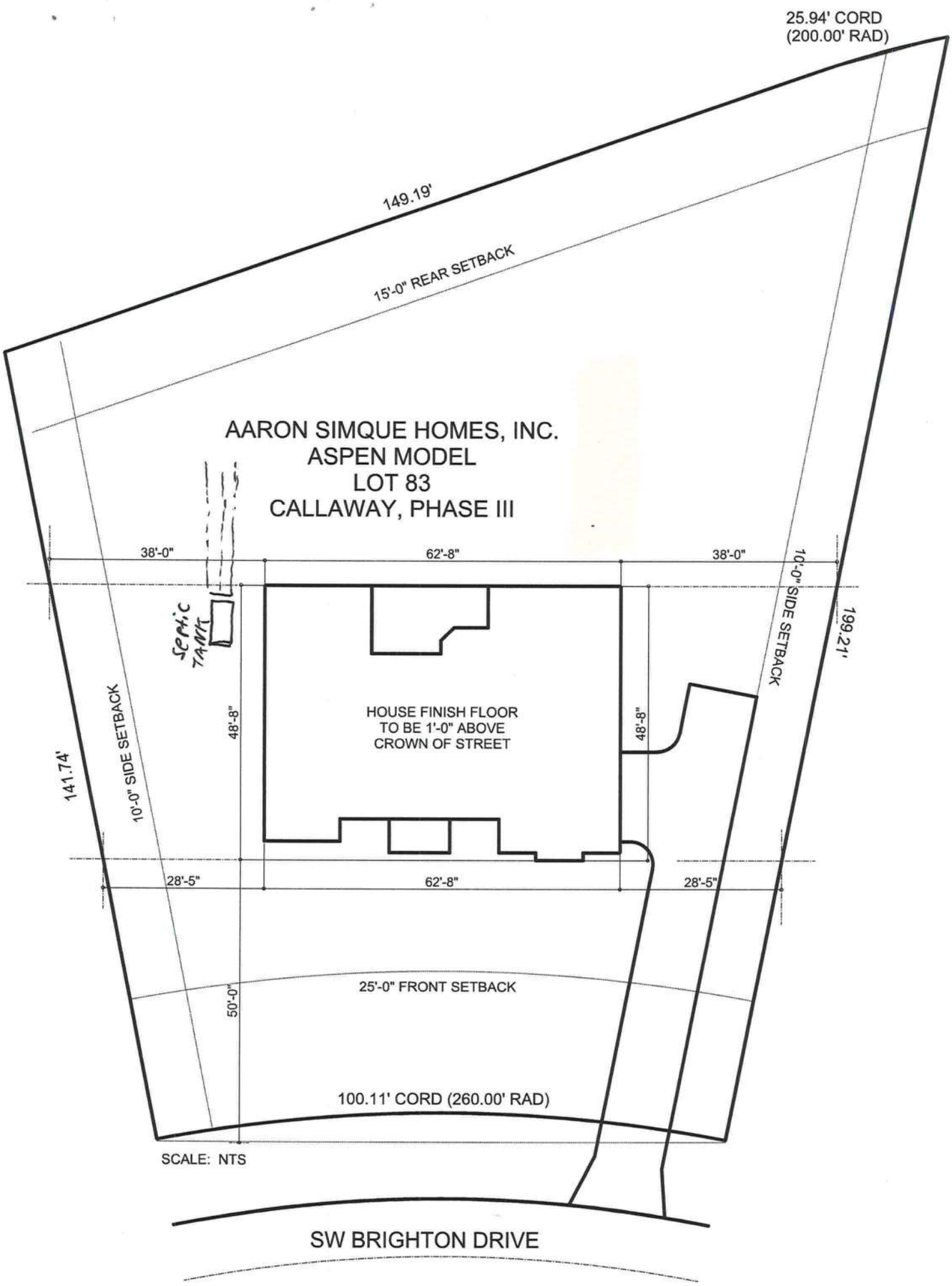
25.94' CORD
(200.00' RAD)
149.19'
15'-0" REAR SETBACK
AARON SIMQUE HOMES, INC.
ASPEN MODEL
LOT 83
CALLAWAY, PHASE III
38'-0"
62'-8"
38'-0"
10'-0" SIDE SETBACK
199.21'
SEPTIC TANK
48'-8"
HOUSE FINISH FLOOR
TO BE 1'-0" ABOVE
CROWN OF STREET
48'-8"
141.74'
10'-0" SIDE SETBACK
28'-5"
62'-8"
28'-5"
25'-0" FRONT SETBACK
50'-0"
100.11' CORD (260.00' RAD)
SCALE: NTS
SW BRIGHTON DRIVE

Application for Onsite Sewage Disposal System Construction Permit. Part II Site Plan

Permit Application Number: 04-0389N

ALL CHANGES MUST BE APPROVED BY THE COUNTY HEALTH UNIT

SIMQUE/CR 03-1893

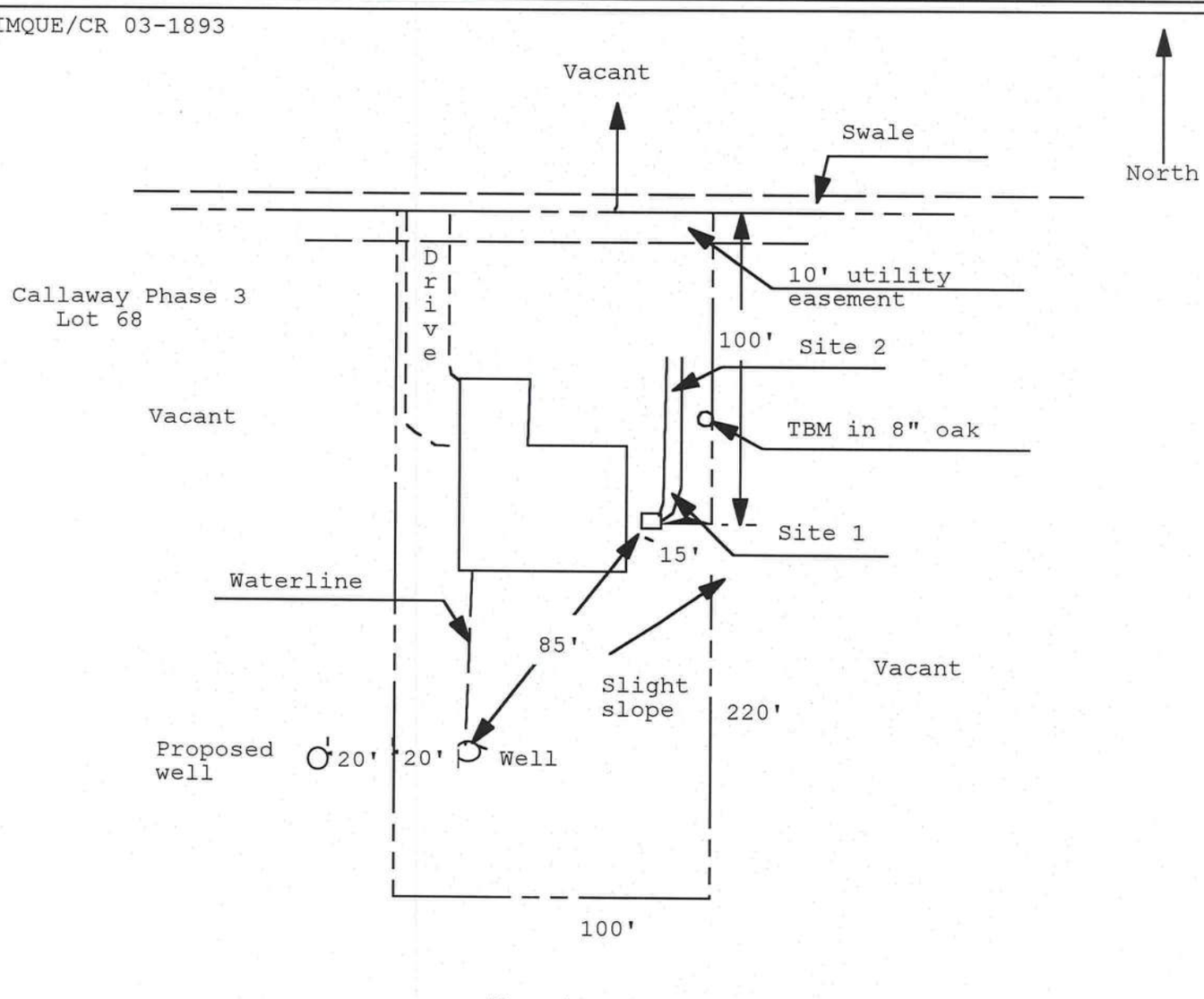

Site Plan Submitted By Paul Lloyd Date 3/29/04

Plan Approved ✓ Not Approved ____ Date 3/29/04

By Paul Lloyd MJ Jr CPHU

4-6-04

Notes: ____

Columbia County Building Department
Culvert Permit

Culvert Permit No.
000000261

DATE 04/07/2004 PARCEL ID # 15-4S-16-03023-368

APPLICANT AARON SIMQUE PHONE 755.0841

ADDRESS RT. 9, BOX 785-33 LAKE CITY FL 32024

OWNER AARON SIMQUE HOMES, INC. PHONE 755.0841

ADDRESS 139 SW STAFFORD CRT LAKE CITY FL 32024

CONTRACTOR AARON SIMQUE PHONE 755/0841

LOCATION OF PROPERTY C-247-S TO CALLAHAN RD., L GO TO CALLAWAY S/D PHASE 3, TAKE STAFFORD CRT., 2ND TO LAST LOT BEFORE TH CUL-DE-SAC.

SUBDIVISION/LOT/BLOCK/PHASE/UNIT CALLAWAY 68 3

SIGNATURE

INSTALLATION REQUIREMENTS

[x] Culvert size will be 18 inches in diameter with a total lenght of 32 feet, leaving 24 feet of driving surface. Both ends will be mitered 4 foot with a 4 : 1 slope and poured with a 4 inch thick reinforced concrete slab.

INSTALLATION NOTE: Turnouts will be required as follows:
a) a majority of the current and existing driveway turnouts are paved, or;
b) the driveway to be served will be paved or formed with concrete.
Turnouts shall be concrete or paved a minimum of 12 feet wide or the width of the concrete or paved driveway, whichever is greater. The width shall conform to the current and existing paved or concreted turnouts.

[ ] Culvert installation shall conform to the approved site plan standards.

[ ] Department of Transportation Permit installation approved standards.

[ ] Other

ALL PROPER SAFETY REQUIREMENTS SHOULD BE FOLLOWED DURING THE INSTALATION OF THE CULVERT.

135 NE Hernando Ave., Suite B-21
Lake City, FL 32055
Phone: 386-758-1008 Fax: 386-758-2160

Amount Paid 25.00

FORM 600A-2001

FLORIDA ENERGY EFFICIENCY CODE FOR BUILDING CONSTRUCTION

Florida Department of Community Affairs

Residential Whole Building Performance Method A

Project Name:	**Aspen Model Lot 83 Callaway Phase III**	Builder:	**Aaron Simque Homes, Inc.**
Address:	**Lot: 83, Sub: Callaway III, Plat:**	Permitting Office:	**Columbia County**
City, State:	**Lake City, FL 32025-**	Permit Number:	21706
Owner:	**Aaron Simque Homes, Inc.**	Jurisdiction Number:	221000
Climate Zone:	**North**		

1. New construction or existing	New	
2. Single family or multi-family	Single family	
3. Number of units, if multi-family	1	
4. Number of Bedrooms	4	
5. Is this a worst case?	No	
6. Conditioned floor area (ft²)	2106 ft²	
7. Glass area & type		
a. Clear - single pane	0.0 ft²	
b. Clear - double pane	365.7 ft²	
c. Tint/other SHGC - single pane	0.0 ft²	
d. Tint/other SHGC - double pane	0.0 ft²	
8. Floor types		
a. Slab-On-Grade Edge Insulation	R=0.0, 236.9(p) ft	
b. N/A		
c. N/A		
9. Wall types		
a. Frame, Wood, Exterior	R=13.0, 1406.6 ft²	
b. Frame, Wood, Adjacent	R=13.0, 306.0 ft²	
c. N/A		
d. N/A		
e. N/A		
10. Ceiling types		
a. Under Attic	R=30.0, 2106.0 ft²	
b. N/A		
c. N/A		
11. Ducts		
a. Sup: Unc. Ret: Unc. AH: Garage	Sup. R=6.0, 50.0 ft	
b. N/A		

12. Cooling systems		
a. Central Unit	Cap: 50.5 kBtu/hr	
	SEER: 10.00	
b. N/A		
c. N/A		
13. Heating systems		
a. Electric Heat Pump	Cap: 50.5 kBtu/hr	
	HSPF: 7.40	
b. N/A		
c. N/A		
14. Hot water systems		
a. Electric Resistance	Cap: 50.0 gallons	
	EF: 0.90	
b. N/A		
c. Conservation credits (HR-Heat recovery, Solar DHP-Dedicated heat pump)		
15. HVAC credits (CF-Ceiling fan, CV-Cross ventilation, HF-Whole house fan, PT-Programmable Thermostat, MZ-C-Multizone cooling, MZ-H-Multizone heating)		

Glass/Floor Area: 0.17

Total as-built points: 32370
Total base points: 32727

PASS

I hereby certify that the plans and specifications covered by this calculation are in compliance with the Florida Energy Code.

PREPARED BY: _____

DATE: 02/24/04

I hereby certify that this building, as designed, is in compliance with the Florida Energy Code.

OWNER/AGENT: _____

DATE: _____

Review of the plans and specifications covered by this calculation indicates compliance with the Florida Energy Code. Before construction is completed this building will be inspected for compliance with Section 553.908 Florida Statutes.

GREAT SEAL OF THE STATE OF FLORIDA
IN GOD WE TRUST

BUILDING OFFICIAL: _____

DATE: _____

EnergyGauge® (Version: FLRCSB v3.21)

FORM 600A-2001

SUMMER CALCULATIONS

Residential Whole Building Performance Method A - Details

ADDRESS: **Lot: 83, Sub: Callaway III, Plat: , Lake City, FL, 32025-** PERMIT #:

BASE

GLASS TYPES

.18 X Conditioned Floor Area	X BSPM	= Points
.18 **2106.0**	**20.04**	**7596.8**

AS-BUILT

Type/SC	Overhang Ornt	Len	Hgt	Area X	SPM X	SOF =	Points
Double, Clear	S	1.5	5.3	15.0	34.50	0.83	427.1
Double, Clear	S	1.5	5.3	15.0	34.50	0.83	427.1
Double, Clear	S	1.5	1.3	4.0	34.50	0.50	69.3
Double, Clear	E	1.5	5.3	20.0	40.22	0.89	716.3
Double, Clear	W	1.5	1.3	4.0	36.99	0.49	73.2
Double, Clear	W	10.0	2.6	12.0	36.99	0.37	166.3
Double, Clear	W	10.0	9.0	60.0	36.99	0.50	1118.5
Double, Clear	E	1.5	8.5	28.0	40.22	0.96	1084.5
Double, Clear	E	4.0	3.8	13.0	40.22	0.51	264.2
Double, Clear	E	5.0	9.0	33.0	40.22	0.69	912.3
Double, Clear	E	1.5	8.3	28.0	40.22	0.96	1084.5
Double, Clear	SW	6.0	8.3	14.0	38.46	0.56	302.2
Double, Clear	W	6.0	8.3	28.0	36.99	0.61	635.5
Double, Clear	W	1.5	7.3	36.0	36.99	0.94	1254.3
Double, Clear	S	4.0	9.0	33.0	34.50	0.70	791.9
Double, Clear	S	6.0	2.7	6.7	34.50	0.44	102.7
Double, Clear	N	1.5	4.3	16.0	19.22	0.89	274.4
As-Built Total:				**365.7**			**9704.4**

WALL TYPES	Area X	BSPM =	Points
Adjacent	306.0	0.70	214.2
Exterior	1406.6	1.70	2391.2
Base Total:	**1712.6**		**2605.4**

Type	R-Value	Area X	SPM =	Points
Frame, Wood, Exterior	13.0	1406.6	1.50	2109.9
Frame, Wood, Adjacent	13.0	306.0	0.60	183.6
As-Built Total:		**1712.6**		**2293.5**

DOOR TYPES	Area X	BSPM =	Points
Adjacent	20.0	2.40	48.0
Exterior	0.0	0.00	0.0
Base Total:	**20.0**		**48.0**

Type	Area X	SPM =	Points
Adjacent Insulated	20.0	1.60	32.0
As-Built Total:	**20.0**		**32.0**

CEILING TYPES	Area X	BSPM =	Points
Under Attic	2106.0	1.73	3643.4
Base Total:	**2106.0**		**3643.4**

Type	R-Value	Area X	SPM X SCM =	Points
Under Attic	30.0	2106.0	1.73 X 1.00	3643.4
As-Built Total:		**2106.0**		**3643.4**

FORM 600A-2001

SUMMER CALCULATIONS

Residential Whole Building Performance Method A - Details

ADDRESS: **Lot: 83, Sub: Callaway III, Plat: , Lake City, FL, 32025-** PERMIT #:

BASE					AS-BUILT						
FLOOR TYPES	Area	X	BSPM	= Points	Type	R-Value	Area	X	SPM	=	Points
Slab	236.9(p)		-37.0	-8765.3	Slab-On-Grade Edge Insulation	0.0	236.9(p		-41.20		-9760.3
Raised	0.0		0.00	0.0							
Base Total:				**-8765.3**	**As-Built Total:**		**236.9**				**-9760.3**
INFILTRATION	Area	X	BSPM	= Points			Area	X	SPM	=	Points
	2106.0		10.21	21502.3			2106.0		10.21		21502.3
Summer Base Points:				**26630.5**	**Summer As-Built Points:**						**27415.3**
Total Summer Points	X System Multiplier		= Cooling Points		Total Component	X Cap Ratio	X Duct Multiplier (DM x DSM x AHU)	X System Multiplier	X Credit Multiplier	= Cooling Points	
26630.5	**0.4266**		**11360.6**		27415.3 **27415.3**	1.000 **1.00**	(1.090 x 1.147 x 1.00) **1.250**	0.341 **0.341**	1.000 **1.000**	11698.2 **11698.2**	

FORM 600A-2001

WINTER CALCULATIONS

Residential Whole Building Performance Method A - Details

ADDRESS: **Lot: 83, Sub: Callaway III, Plat: , Lake City, FL, 32025-** PERMIT #:

BASE

GLASS TYPES

.18 X	Conditioned Floor Area	X BWPM	= Points
.18	**2106.0**	**12.74**	**4829.5**

AS-BUILT

Type/SC	Overhang Ornt	Len	Hgt	Area X	WPM X	WOF =	Points
Double, Clear	S	1.5	5.3	15.0	4.03	1.16	70.2
Double, Clear	S	1.5	5.3	15.0	4.03	1.16	70.2
Double, Clear	S	1.5	1.3	4.0	4.03	2.94	47.5
Double, Clear	E	1.5	5.3	20.0	9.09	1.04	189.8
Double, Clear	W	1.5	1.3	4.0	10.77	1.18	50.9
Double, Clear	W	10.0	2.6	12.0	10.77	1.24	159.9
Double, Clear	W	10.0	9.0	60.0	10.77	1.18	761.4
Double, Clear	E	1.5	8.5	28.0	9.09	1.02	259.1
Double, Clear	E	4.0	3.8	13.0	9.09	1.30	153.6
Double, Clear	E	5.0	9.0	33.0	9.09	1.14	342.7
Double, Clear	E	1.5	8.3	28.0	9.09	1.02	259.1
Double, Clear	SW	6.0	8.3	14.0	7.17	1.42	142.5
Double, Clear	W	6.0	8.3	28.0	10.77	1.13	340.6
Double, Clear	W	1.5	7.3	36.0	10.77	1.02	393.6
Double, Clear	S	4.0	9.0	33.0	4.03	1.49	198.6
Double, Clear	S	6.0	2.7	6.7	4.03	3.56	96.1
Double, Clear	N	1.5	4.3	16.0	14.30	1.01	230.0
As-Built Total:				**365.7**			**3765.8**

WALL TYPES	Area X	BWPM =	Points	Type	R-Value	Area X	WPM =	Points
Adjacent	306.0	3.60	1101.6	Frame, Wood, Exterior	13.0	1406.6	3.40	4782.4
Exterior	1406.6	3.70	5204.4	Frame, Wood, Adjacent	13.0	306.0	3.30	1009.8
Base Total:	**1712.6**		**6306.0**	**As-Built Total:**		**1712.6**		**5792.2**

DOOR TYPES	Area X	BWPM =	Points	Type	Area X	WPM =	Points
Adjacent	20.0	11.50	230.0	Adjacent Insulated	20.0	8.00	160.0
Exterior	0.0	0.00	0.0				
Base Total:	**20.0**		**230.0**	**As-Built Total:**	**20.0**		**160.0**

CEILING TYPES	Area X	BWPM =	Points	Type	R-Value	Area X	WPM X WCM =	Points
Under Attic	2106.0	2.05	4317.3	Under Attic	30.0	2106.0	2.05 X 1.00	4317.3
Base Total:	**2106.0**		**4317.3**	**As-Built Total:**		**2106.0**		**4317.3**

FORM 600A-2001

WINTER CALCULATIONS

Residential Whole Building Performance Method A - Details

ADDRESS: **Lot: 83, Sub: Callaway III, Plat: , Lake City, FL, 32025-** PERMIT #:

BASE				AS-BUILT					
FLOOR TYPES	Area X	BWPM =	Points	Type	R-Value	Area X	WPM	=	Points
Slab	236.9(p)	8.9	2108.4	Slab-On-Grade Edge Insulation	0.0	236.9(p	18.80		4453.7
Raised	0.0	0.00	0.0						
Base Total:			**2108.4**	**As-Built Total:**		**236.9**			**4453.7**
INFILTRATION	Area X	BWPM =	Points			Area X	WPM	=	Points
	2106.0	-0.59	-1242.5			2106.0	-0.59		-1242.5
Winter Base Points:			**16548.7**	**Winter As-Built Points:**					**17246.5**
Total Winter Points	X System Multiplier	= Heating Points		Total Component	X Cap Ratio	X Duct Multiplier (DM x DSM x AHU)	X System Multiplier	X Credit Multiplier	= Heating Points
16548.7	**0.6274**	**10382.6**		17246.5 **17246.5**	1.000 **1.00**	(1.069 x 1.169 x 1.00) **1.250**	0.461 **0.461**	1.000 **1.000**	9931.5 **9931.5**

FORM 600A-2001

WATER HEATING & CODE COMPLIANCE STATUS

Residential Whole Building Performance Method A - Details

ADDRESS: **Lot: 83, Sub: Callaway III, Plat: , Lake City, FL, 32025-** PERMIT #:

BASE				AS-BUILT							
WATER HEATING											
Number of Bedrooms	X Multiplier	= Total		Tank Volume	EF	Number of Bedrooms	X Tank Ratio	X Multiplier	X Credit Multiplier	= Total	
4	2746.00	10984.0		50.0	0.90	4	1.00	2684.98	1.00	10739.9	
				As-Built Total:						**10739.9**	

CODE COMPLIANCE STATUS

BASE				AS-BUILT			
Cooling Points +	Heating Points +	Hot Water Points =	Total Points	Cooling Points +	Heating Points +	Hot Water Points =	Total Points
11361	**10383**	**10984**	**32727**	**11698**	**9932**	**10740**	**32370**

PASS

Code Compliance Checklist

Residential Whole Building Performance Method A - Details

ADDRESS: **Lot: 83, Sub: Callaway III, Plat: , Lake City, FL, 32025-** PERMIT #:

6A-21 INFILTRATION REDUCTION COMPLIANCE CHECKLIST

COMPONENTS	SECTION	REQUIREMENTS FOR EACH PRACTICE	CHECK
Exterior Windows & Doors	606.1.ABC.1.1	Maximum:.3 cfm/sq.ft. window area; .5 cfm/sq.ft. door area.	
Exterior & Adjacent Walls	606.1.ABC.1.2.1	Caulk, gasket, weatherstrip or seal between: windows/doors & frames, surrounding wall; foundation & wall sole or sill plate; joints between exterior wall panels at corners; utility penetrations; between wall panels & top/bottom plates; between walls and floor. EXCEPTION: Frame walls where a continuous infiltration barrier is installed that extends from, and is sealed to, the foundation to the top plate.	
Floors	606.1.ABC.1.2.2	Penetrations/openings >1/8" sealed unless backed by truss or joint members. EXCEPTION: Frame floors where a continuous infiltration barrier is installed that is sealed to the perimeter, penetrations and seams.	
Ceilings	606.1.ABC.1.2.3	Between walls & ceilings; penetrations of ceiling plane of top floor; around shafts, chases, soffits, chimneys, cabinets sealed to continuous air barrier; gaps in gyp board & top plate; attic access. EXCEPTION: Frame ceilings where a continuous infiltration barrier is installed that is sealed at the perimeter, at penetrations and seams.	
Recessed Lighting Fixtures	606.1.ABC.1.2.4	Type IC rated with no penetrations, sealed; or Type IC or non-IC rated, installed inside a sealed box with 1/2" clearance & 3" from insulation; or Type IC rated with < 2.0 cfm from conditioned space, tested.	
Multi-story Houses	606.1.ABC.1.2.5	Air barrier on perimeter of floor cavity between floors.	
Additional Infiltration reqts	606.1.ABC.1.3	Exhaust fans vented to outdoors, dampers; combustion space heaters comply with NFPA, have combustion air.	

6A-22 OTHER PRESCRIPTIVE MEASURES (must be met or exceeded by all residences.)

COMPONENTS	SECTION	REQUIREMENTS	CHECK
Water Heaters	612.1	Comply with efficiency requirements in Table 6-12. Switch or clearly marked circuit breaker (electric) or cutoff (gas) must be provided. External or built-in heat trap required.	
Swimming Pools & Spas	612.1	Spas & heated pools must have covers (except solar heated). Non-commercial pools must have a pump timer. Gas spa & pool heaters must have a minimum thermal efficiency of 78%.	
Shower heads	612.1	Water flow must be restricted to no more than 2.5 gallons per minute at 80 PSIG.	
Air Distribution Systems	610.1	All ducts, fittings, mechanical equipment and plenum chambers shall be mechanically attached, sealed, insulated, and installed in accordance with the criteria of Section 610. Ducts in unconditioned attics: R-6 min. insulation.	
HVAC Controls	607.1	Separate readily accessible manual or automatic thermostat for each system.	
Insulation	604.1, 602.1	Ceilings-Min. R-19. Common walls-Frame R-11 or CBS R-3 both sides. Common ceiling & floors R-11.	

ENERGY PERFORMANCE LEVEL (EPL) DISPLAY CARD

ESTIMATED ENERGY PERFORMANCE SCORE* = 82.7

The higher the score, the more efficient the home.

Aaron Simque Homes, Inc., Lot: 83, Sub: Callaway III, Plat: , Lake City, FL, 32025-

1. New construction or existing	New	
2. Single family or multi-family	Single family	
3. Number of units, if multi-family	1	
4. Number of Bedrooms	4	
5. Is this a worst case?	No	
6. Conditioned floor area (ft²)	2106 ft²	
7. Glass area & type		
a. Clear - single pane	0.0 ft²	
b. Clear - double pane	365.7 ft²	
c. Tint/other SHGC - single pane	0.0 ft²	
d. Tint/other SHGC - double pane	0.0 ft²	
8. Floor types		
a. Slab-On-Grade Edge Insulation	R=0.0, 236.9(p) ft	
b. N/A		
c. N/A		
9. Wall types		
a. Frame, Wood, Exterior	R=13.0, 1406.6 ft²	
b. Frame, Wood, Adjacent	R=13.0, 306.0 ft²	
c. N/A		
d. N/A		
e. N/A		
10. Ceiling types		
a. Under Attic	R=30.0, 2106.0 ft²	
b. N/A		
c. N/A		
11. Ducts		
a. Sup: Unc. Ret: Unc. AH: Garage	Sup. R=6.0, 50.0 ft	
b. N/A		
12. Cooling systems		
a. Central Unit	Cap: 50.5 kBtu/hr	
	SEER: 10.00	
b. N/A		
c. N/A		
13. Heating systems		
a. Electric Heat Pump	Cap: 50.5 kBtu/hr	
	HSPF: 7.40	
b. N/A		
c. N/A		
14. Hot water systems		
a. Electric Resistance	Cap: 50.0 gallons	
	EF: 0.90	
b. N/A		
c. Conservation credits (HR-Heat recovery, Solar DHP-Dedicated heat pump)		
15. HVAC credits (CF-Ceiling fan, CV-Cross ventilation, HF-Whole house fan, PT-Programmable Thermostat, RB-Attic radiant barrier, MZ-C-Multizone cooling, MZ-H-Multizone heating)		

I certify that this home has complied with the Florida Energy Efficiency Code For Building Construction through the above energy saving features which will be installed (or exceeded) in this home before final inspection. Otherwise, a new EPL Display Card will be completed based on installed Code compliant features.

Builder Signature: _____ Date: _____

Address of New Home: _____ City/FL Zip: _____

**NOTE: The home's estimated energy performance score is only available through the FLA/RES computer program. This is not a Building Energy Rating. If your score is 80 or greater (or 86 for a US EPA/DOE EnergyStar™ designation), your home may qualify for energy efficiency mortgage (EEM) incentives if you obtain a Florida Energy Gauge Rating. Contact the Energy Gauge Hotline at 321/638-1492 or see the Energy Gauge web site at www.fsec.ucf.edu for information and a list of certified Raters. For information about Florida's Energy Efficiency Code For Building Construction, contact the Department of Community Affairs at 850/487-1824.*

EnergyGauge® (Version: FLRCSB v3.21)

AAMA/NWWDA 101/I.S.2-97
TEST REPORT

Rendered to:

MI HOME PRODUCTS, INC.

SERIES/MODEL: 650
TYPE: Aluminum Triple Single Hung Window

Title of Test	Summary of Results
AAMA Rating	H-R35 112 x 72
Uniform Load Deflection Test Pressure	+35.3 psf -47.2 psf
Operating Force	25 lb max.
Air Infiltration	0.16 cfm/ft^2
Water Resistance Test Pressure	5.25 psf
Uniform Load Structural Test Pressure	+53.0 psf -52.5 psf
Deglazing	Passed
Forced Entry Resistance	Grade 10

Reference should be made to ATI Report No. 01-41641.01 for complete test specimen description and data.

Allen N. Reeves
7 JUNE 2002

ALLEN N. REEVES
NO. 18354
STATE OF FLORIDA
PROFESSIONAL ENGINEER

Architectural Testing

AAMA/NWWDA 101/I.S.2-97 TEST REPORT

Rendered to:

MI HOME PRODUCTS, INC.
P.O. Box 370
650 West Market Street
Gratz, Pennsylvania 17030-0370

Report No:	01-41641.01
Test Date:	05/13/02
And:	05/16/02
Report Date:	06/05/02
Expiration Date:	05/16/06

Project Summary: Architectural Testing, Inc. (ATI) was contracted by MI Home Products, Inc. to witness testing on a Series/Model 650, aluminum triple single hung window at their facility located in Elizabethville, Pennsylvania. The sample tested successfully met the performance requirements for a H-R35 112 x 72 rating.

Test Specification: The test specimen was evaluated in accordance with AAMA/NWWDA 101/I.S.2-97, *Voluntary Specifications for Aluminum, Vinyl (PVC) and Wood Windows and Glass Doors.*

Test Specimen Description:

Series/Model: 650

Type: Aluminum Triple Single Hung Window

Overall Size: 9' 3-1/2" wide by 5' 11-11/16" high

Active Sash Size (3): 3' 0-1/4" wide by 2' 10-3/4" high

Fixed Daylight Opening Size (3): 2' 8-1/4" wide by 2' 9-1/8" high

Screen Size (3): 2' 9-1/8" wide by 2' 11" high

Finish: All aluminum was painted white.

ALLEN N. REEVES
CERTIFICATE
NO. 19254
STATE OF
FLORIDA
PROFESSIONAL ENGINEER

Allen N. Reeves
7 JUNE 2002

130 Derry Court
York, PA 17402-9405
phone: 717.764.7700
fax: 717.764.4129
www.archtest.com

Test Specimen Description: (Continued)

Glazing Details: The active and fixed lites utilized 5/8" thick, sealed insulating glass constructed from two sheets of 1/8" thick, clear annealed glass and a metal reinforced butyl spacer system. The active sash was channel glazed utilizing a flexible vinyl wrap-around gasket. The fixed lite was interior glazed against double-sided adhesive foam tape and secured with PVC snap-in glazing beads.

Weatherstripping:

Description	Quantity	Location
0.230" high by 0.270" backed polypile with center fin	Row	Fixed meeting rail
0.250" high by 0.187" backed polypile with center fin	2 Rows	Active sash stiles
1/2" by 1/2" dust plug	4 Pieces	Active sash, top and bottom of stiles
1/4" foam filled vinyl bulb seal	1 Row	Active sash, bottom rail

Frame Construction: The frame was constructed of extruded aluminum with coped, butted, and sealed corners fastened with two #8 x 1" screws through the head and sill into each jamb screw boss. End caps were utilized on the ends of the fixed meeting rail and secured with two 1-1/4" screws per cap. The meeting rail was secured to the frame utilizing two 1-1/4" screws. The mullions were secured utilizing four #8 x 1-1/4" screws through the head and sill into the mullion screw boss.

Sash Construction: The sash was constructed of extruded aluminum with coped, butted, and sealed corners fastened with two #8 x 1-1/2" screws through the rails into each stiles' screw boss.

Screen Construction: The screen was constructed from roll-formed aluminum with keyed corners. The fiberglass mesh was secured with a flexible spline.

ALLEN N. REEVES
CERTIFICATE
NO. 19354
STATE OF
FLORIDA
PROFESSIONAL ENGINEER

Allen N. Reeves
7 JUNE 2002

Test Specimen Description: (Continued)

Hardware:

Description	Quantity	Location
Metal cam lock with keeper	1	Midspan of each active meeting rail with adjacent keepers
Plastic tilt latch	2	Each active sash meeting rail ends
Metal tilt pin	2	Each active sash bottom rail ends
Balance assembly	2	Each active sash contained one in each jamb
Screen plunger	2	Each screen contained two 4" from rail ends on top rail

Drainage: Sloped sill

Reinforcement: No reinforcement was utilized.

Installation: The test specimen was installed into a 2 x 8 #2 Spruce-Pine-Fir wood buck with #8 x 1-5/8" drywall screws every 8" on center around the nail fin. Polyurethane was used as a sealant under the nail fin and around the exterior perimeter.

Test Results:

The results are tabulated as follows:

Paragraph	Title of Test - Test Method	Results	Allowed
2.2.1.6.1	Operating Force	25 lbs	30 lbs max.
	Air Infiltration (ASTM E 283-91) @ 1.57 psf (25 mph)	0.16 cfm/ft^2	0.3 cfm/ft^2 max.

***Note #1**: The tested specimen meets the performance levels specified in AAMA/NWWDA 101/I.S. 2-97 for air infiltration.*

Water Resistance (ASTM E 547-00) (with and without screen) WTP = 2.86 psf	No leakage	No leakage

Allen N. Reeves
7 JUNE 2002

ALLEN N. REEVES
CERTIFICATE NO. 13254
STATE OF FLORIDA
PROFESSIONAL ENGINEER

Test Results: (Continued)

Paragraph	Title of Test - Test Method	Results	Allowed
2.1.4.1	Uniform Load Deflection (ASTM E 330-97)		
	(Measurements reported were taken on the mullion)		
	(Loads were held for 52 seconds)		
	@ 15.0 psf (positive)	0.15"	0.41" max.
	@ 15.0 psf (negative)	0.29"	0.41" max.
2.1.4.2	Uniform Load Structural (ASTM E 330-97)		
	(Measurements reported were taken on the mullion)		
	(Loads were held for 10 seconds)		
	@ 22.5 psf (positive)	0.01"	0.29" max.
	@ 22.5 psf (negative)	0.01"	0.29" max.
2.2. .6.2	Deglazing Test (ASTM E 987-88)		
	In operating direction at 70 lbs		
	Right sash, meeting rail	0.12"/25%	0.50"/100%
	Right sash, bottom rail	0.12"/25%	0.50"/100%
	Middle sash, meeting rail	0.12"/25%	0.50"/100%
	Middle sash, bottom rail	0.12"/25%	0.50"/100%
	Left sash, meeting rail	0.12"/25%	0.50"/100%
	Left sash, bottom rail	0.12"/25%	0.50"/100%
	In remaining direction at 50 lbs		
	Right sash, right stile	0.06"/12%	0.50"/100%
	Right sash, left stile	0.06"/12%	0.50"/100%
	Middle sash, right stile	0.06"/12%	0.50"/100%
	Middle sash, left stile	0.06"/12%	0.50"/100%
	Left sash, right stile	0.06"/12%	0.50"/100%
	Left sash, left stile	0.06"/12%	0.50"/100%
2 .8	Forced Entry Resistance (ASTM F 588-97)		
	Type: A		
	Grade: 10		
	Lock Manipulation Test	No entry	No entry
	Test A1 through A5	No entry	No entry
	Test A7	No entry	No entry
	Lock Manipulation Test	No entry	No entry

Allen N. Reeves
7 JUNE 2002

ALLEN N. REEVES
CERTIFICATE NO. 19394
STATE OF FLORIDA
PROFESSIONAL ENGINEER

Test Results: (Continued)

Paragraph	Title of Test - Test Method	Results	Allowed
Optional Performance			
4.3	Water Resistance (ASTM E 547-00) (with and without screen) WTP = 5.25 psf	No leakage	No leakage
	Uniform Load Deflection (ASTM E 330-97) (Measurements reported were taken on the mullion) (Loads were held for 52 seconds)		
	@ 35.3 psf (positive)	0.46"*	0.41" max
	@ 47.2 psf (negative)	0.67"*	0.41" max

**Exceeds L/175 for deflection, but meets all other test requirements.*

	Uniform Load Structural (ASTM E 330-97) (Measurements reported were taken on the mullion) (Loads were held for 10 seconds)		
	@ 53.0 psf (positive)	0.03"	0.29" max
	@ 52.5 psf (negative)	0.02"	0.29" max

Detailed drawings, representative samples of the test specimen, and a copy of this report will be retained by ATI for a period of four years. The above results were secured by using the designated test methods and they indicate compliance with the performance requirements of the above referenced specification. This report does not constitute certification of this product, which may only be granted by the certification program administrator.

For ARCHITECTURAL TESTING, INC:

Mark A. Hess
Technician

Allen N. Reeves, P.E.
Director - Engineering Services
7 JUNE 2002

ALLEN N. REEVES
CERTIFICATE
NO. 19354
STATE OF
FLORIDA
PROFESSIONAL ENGINEER

MAH:nlb
01-41641.01

AAMA/NWWDA 101/I.S.2-97
TEST REPORT

Rendered to:

MI HOME PRODUCTS, INC.

SERIES/MODEL: 450/650/850
TYPE: H-C30 54 x 90; H-C40 52 x 72*

	Summary of Results	
Title of Test	**Test Specimen #1**	**Test Specimen #2**
AAMA Rating	H-C30 54 x 90	H-C40 52 x 72*
Uniform Load Deflection Test Pressure	35.0 psf	47.0 psf
Operating Force	20 lb max.	N/A
Air Infiltration	0.27 cfm/ft^2	N/A
Water Resistance Test Pressure	5.25 psf	6.0 psf
Uniform Structural Load Test Pressure	45.0 psf	70.5 psf
Deglazing	Passed	N/A
Forced Entry Resistance	Grade 10	N/A

Reference should be made to ATI Report No. 01-37589.02 for complete test specimen description and data.

Allen N. Rennie
24 JUNE 2002

Architectural Testing

TEST REPORT

Rendered to:

MI HOME PRODUCTS, INC.
P.O. Box 370
650 West Market Street
Gratz, Pennsylvania 17030-0370

Report No:	01-37589.02
Test Date:	06/15/00
Thru:	06/29/00
Report Date:	06/06/02
Expiration Date:	06/29/04

Project Summary: Architectural Testing, Inc. (ATI) was contracted by MI Home Products, Inc. to witness performance testing on two Series/Model 450/650/850, aluminum single hung windows at their facility in Elizabethville, Pennsylvania. The samples tested successfully met the performance requirements for the following ratings: Test Specimen #1: H-C30 54 x 90; Test Specimen #2: H-C40 52 x 72*.

General Note: An asterisk (*) next to the performance grade indicates that the size tested for optional performance was smaller than the Gateway test size for the product type and class.

Test Specification: The test specimen was evaluated in accordance with AAMA/NWWDA 101/I.S.2-97, *Voluntary Specifications for Aluminum, Vinyl (PVC) and Wood Windows and Glass Doors.*

Test Specimen Description

Series/Model: 450/650/850

Type: Aluminum Single Hung Window

Test Specimen #1: Gateway Performance Specimen H-C30 54 x 90 rating

Overall Size: 4' 6-1/2" wide by 7' 6-1/2" high

Active Sash Size: 4' 4" wide by 3' 9-3/4" high

Fixed Daylight Opening Size: 4' 1-1/2" wide by 3' 6-1/2" high

Screen Size: 4' 2-1/4" wide by 3' 8-1/2" high

130 Derry Court
York, PA 17402-9405
phone: 717.764.7700
fax: 717.764.4129
www.archtest.com

Allen N. Reuss
28 JUNE 2002

Test Specimen Description: (Continued)

Test Specimen #2: H-C40 52 x 72*

Overall Size: 4' 4-1/4" wide by 6' 0" high

Active Sash Size: 4' 2" wide by 3' 0-1/2" high

Fixed Daylight Opening Size: 3' 11-1/2" wide by 2' 9-1/2" high

Screen Size: 4' 0" wide by 2' 11" high

The following descriptions apply to all specimens.

Finish: All aluminum was painted.

Glazing Details: The lites utilized 5/8" thick sealed insulating glass units fabricated from two sheets of 3/32" clear annealed glass and an intercept™ spacer system. The sash was channel glazed with a flexible gasket. The fixed lite was interior glazed onto single-sided adhesive foam tape and secured with extruded PVC glazing beads.

Weatherstripping:

Description	Quantity	Location
0.210" high by 0.270" backed polypile with center fin	1 Row	Fixed meeting rail
0.250" high by 0.187" backed polypile with center fin	2 Rows	Stiles
0.300" diameter by 0.187" backed foam filled vinyl bulb gasket	1 Row	Bottom rail
0.400" high by 1/2" square polypile dust plug	4	One on each sash corner

Frame Construction: Series/Model 450 frame was constructed of thermally broken extruded aluminum with coped, butted and sealed corners. The fixed meeting rail was constructed of an extruded aluminum member with coped, butted and sealed ends fastened with two #8 x 1/4" screws. Series/Model 650 frame was constructed of extruded aluminum. Series/Model 850 frame was constructed of thermally broken extruded aluminum members.

Sash Construction: The Series/Model 450 sash members were constructed of thermally broken extruded aluminum members with coped, butted and sealed corners fastened with one #8 x 1-1/4" screw. Series/Model 650 sash was constructed of extruded aluminum. Series/Model 850 sash was constructed of extruded aluminum.

Screen Construction: The screen was constructed of rolled-aluminum members with plastic keyed corners. The fiberglass mesh was secured with a flexible spline.

Allen M. Rice
24 JUNE 2002

Test Specimen Description: (Continued)

Hardware:

Description	Quantity	Location
Plastic snap latch	1	Midspan of bottom rail
Block and tackle balance system	2	One per jamb
Plastic tilt latch	2	One on each end of sash meeting rail
Metal pivot bar	2	One on each end of bottom rail

Drainage: Sloped sill

Reinforcement: No reinforcement.

Installation: The test unit was installed into the nominal 2" x 8" Spruce-Pine-Fir #2 wood test buck utilizing the nailing fin secured with 1" long galvanized roofing nails, 6" from each corner and every 18" on center. The nailing fin was also bedded in polyurethane. The exterior perimeter was blind stopped with wood members and secured with #8 x 3" screws every 24" on center.

Test Results:

The results are tabulated as follows:

Paragraph	Title of Test - Test Method	Results	Allowed
Test Specimen #1: Gateway Performance Specimen H-C30 54 x 90			
2.2.1.6.1	Operating Force	20 lbs	45 lbs max.
	Air Infiltration (ASTM E 283) @ 1.57 psf (25 mph)	0.27 cfm/ft^2	0.30 cfm/ft^2 max.
Note #1: The tested specimen meets the performance levels specified in AAMA/NWWDA 101/I.S. 2-97 for air infiltration.			
	Water Resistance (ASTM E 547) (with and without screen) WTP = 4.5 psf	No leakage	No leakage
2.1.4.1	Uniform Load Deflection (ASTM E 330-97) (Measurements reported were taken on the fixed meeting rail) (Loads were held for 33 seconds)		
	@ 35.0 psf (positive)	0.27"	0.30" max.
	@ 35.0 psf (negative)	0.73"*	0.30" max.

** Exceeds L/175 for deflection but meets all other test requirements.*

Allen M. Rennie
24 JUNE 2002

Test Results:

Paragraph	Title of Test - Test Method	Results	Allowed
Test Specimen #1: Gateway Performance Specimen H-C30 54 x 90 (Continued)			
2.1.4.2	Uniform Load Structural (ASTM E 330-97) (Measurements reported were taken on the fixed meeting rail) (Loads were held for 10 seconds)		
	@ 45.0 psf (positive)	0.03"	0.21" max
	@ 45.0 psf (negative)	0.04"	0.21" max
2.2.1.6.2	Deglazing Test (ASTM E 987-88) In operating direction at 70 lbs		
	Meeting rail	0.06"/12%	0.50"/100%
	Bottom rail	0.06"/12%	0.50"/100%
	In remaining direction at 50 lbs		
	Left stile	0.06"/12%	0.50"/100%
	Right stile	0.06"/12%	0.50"/100%
2.1.8	Forced Entry Resistance (ASTM F 588-97)		
	Type: A Grade: 10		
	Lock Manipulation Test	No entry	No entry
	Test A1 thru A5	No entry	No entry
	Test A7	No entry	No entry
	Lock Manipulation Test	No entry	No entry

Allen N. Reuss
28 JULY 2003

Test Results:

Paragraph	Title of Test - Test Method	Results	Allowed
Test Specimen #1: Gateway Performance Specimen H-C30 54 x 90 (Continued)			
Optional Performance			
4.3	Water Resistance (ASTM E 547) (with and without screen) WTP = 5.25 psf	No leakage	No leakage
Test Specimen #2: H-C40 52 x 72*			
Optional Performance			
4.3	Water Resistance (ASTM E 547 and ASTM E 331) (with and without screen) WTP = 6.0 psf	No leakage	No leakage
	Uniform Load Deflection (ASTM E 330) (Measurements reported were taken on the fixed meeting rail) (Loads were held for 33 seconds)		
	@ 47.0 psf (positive)	0.04"	0.30" max.
	@ 47.0 psf (negative)	0.03"	0.30" max.
	Uniform Load Structural (ASTM E 330) (Measurements reported were taken on the fixed meeting rail) (Loads were held for 10 seconds)		
	@ 70.5 psf (positive)	0.07"	0.21" max.
	@ 70.5 psf (negative)	0.04"	0.21" max.

Detailed drawings, representative samples of the test specimen, and a copy of this report will be retained by ATI for a period of four years. The above results were secured by using the designated test methods and they indicate compliance with the performance requirements of the above referenced specification. This report does not constitute certification of this product, which may only be granted by the certification program administrator.

For ARCHITECTURAL TESTING, INC

Mark A. Hess
Technician

Allen N. Reeves, P.E.
Director - Engineering Services
24 JUNE 2002

MAH:baw
01-37589.02

DOCUMENT CONTROL ADDENDUM #01-37589.00

Current Issue Date: 06/06/02

Report No.: 01-37589.01

Requested by: Scott Gill, MI Home Products, Inc.
Purpose: AAMA/NWWDA 101/I.S.2-97 testing on Series/Model 450, aluminum single hung window.
Issued Date: 09/11/00
Comments: Certification copy to John Smith at Associated Laboratories, Inc.

Report No.: 01-37589.02

Requested by: William Emley, MI Home Products, Inc.
Purpose: Revised Report No. 01-37589.01.
Issued Date: 06/06/02
Comments: Added Series/Model 650/850. Florida P.E. seal required on report Certification copy to John Smith at Associated Laboratories, Inc.

Allen N. Reuss
26 JUNE 2002

Expired

STRUCTURAL TEST REPORT SUMMARY

Rendered to:

MI HOME PRODUCTS, INC.

SERIES/MODEL: 650
TYPE: Twin Aluminum Single Hung Window

Title of Test	Results
Overall Design Pressure	35.0 psf
Operating Force	18 lb max.
Air Infiltration	0.29 cfm/ft^2
Water Resistance	5.25 psf
Structural Test Pressure	70.5 psf

Reference should be made to Report No. 01-36060.02 for complete test specimen description and data.

For ARCHITECTURAL TESTING, INC.

Scott D. Kramer

Scott D. Kramer, Technician

SDK:nlb/baw

ALLEN H. RIEVES
CERTIFICATE
NO. 18874
STATE OF
FLORIDA
PROFESSIONAL ENGINEER

Allen H. Rieves
28 MARCH 2002

Expired

Architectural Testing

STRUCTURAL TEST REPORT

Rendered to:

MI HOME PRODUCTS, INC.
650 West Market Street
P.O. Box 370
Gratz, Pennsylvania 17030-0370

Report No: 01-36060.02
Test Date: 11/04/99
Report Date: 03/26/02
Expiration Date: 11/04/03

Project Summary: Architectural Testing, Inc. (ATI) was contracted to perform tests on a Series/Model 650, twin aluminum single hung window at MI Home Products' test facility in Elizabethville, Pennsylvania. Test specimen description and results are reported herein.

Test Specification The test specimen was evaluated in accordance with the following:

ASTM E 283-91, *Standard Test Method for Determining the Rate of Air Leakage Through Exterior Windows, Curtain Walls, and Doors Under Specified Pressure Differences Across the Specimen*

ASTM E 330-97, *Standard Test Method for Structural Performance of Exterior Windows, Curtain Walls, and Doors by Uniform Static Air Pressure Difference*

ASTM E 547-96, *Standard Test Method for Water Penetration of Exterior Windows, Curtain Walls, and Doors by Cyclic Static Air Pressure Differential*

Test Specimen Description:

Series/Model: 650

Type: Twin Aluminum Single Hung Window

Overall Size: 5' 10-1/4" wide by 5' 0" high

Active Size (2): 2' 8-3/4" wide by 2' 6-1/4" high

Fixed Daylight Opening Size (2): 2' 6- 1/4" wide by 2' 3" high

Screen Size (2): 2' 7-3/4" wide by 2' 4-1/4" high

ALLEN H. REEVES
CERTIFICATE NO. 19359
STATE OF FLORIDA
PROFESSIONAL ENGINEER

Allen H. Reeves
28 MARCH 2002

130 Derry Court
York, PA 17402-9405
phone: 717.764.7700
fax: 717.764.4129
www.archtest.com

Test Specimen Description: (Continued)

Finish: All aluminum was painted white.

Glazing Details: Both the active sash and fixed lites utilized 5/8" thick insulating glass fabricated from two sheets of 3/32" thick clear annealed glass and a desiccant filled metal spacer system. The active sash were channel glazed with a flexible wedge gasket. The fixed lites were interior glazed, back bedded with single sided adhesive foam tape and held-in-place with PVC snap-in glazing beads.

Weatherstripping:

Description	Quantity	Location
0.270" backed by 0.190" high polypile with center fin	1 Row	Fixed meeting stile
3/8" high vinyl wrapped foam bulb	1 Row	Bottom rail
0.187" backed by 0.250" high polypile with center fin	2 Rows	Stiles
1/4" high polypile dust plug	2 Rows	Ends of bottom rail, top of each stile

Frame Construction: Frame was constructed of extruded aluminum members and all corners were coped, butted, sealed, and fastened with two screws per corner. The fixed meeting rail was attached to the jambs with a plastic clip and two screws per end.

Mullion Construction: The mullion was constructed of an extruded aluminum member. It was fastened to the head and sill with four screws per end. All screw heads were sealed as well as the butt joint at the sill.

Sash Construction: The sash were constructed of extruded aluminum members and all corners were coped, butted, and fastened with one screw per corner.

Screen Construction: The screen was constructed of rolled aluminum members and the corners were keyed. The screen mesh was held-in-place with a flexible spline.

ALLEN N. REEVES
CERTIFICATE NO. 19359
STATE OF FLORIDA
PROFESSIONAL ENGINEER

Allen N. Reeves
28 MARCH 2002

Test Specimen Description: (Continued)

Hardware:

Description	Quantity	Location
Plastic tilt latches	4	Ends of interior meeting rail
Metal pivot bars	4	Ends of the bottom rails
Metal sweep lock	2	Midspan of interior meeting rail
Metal keeper	2	Midspan of fixed meeting rail
Sash stops	4	One per jamb
Block and tackle balance system	4	One per jamb
Spring loaded latch pins	2	6" from ends of screen top rail

Drainage:

Description	Quantity	Location
Sloped sill		Sill
1/4" wide by 3/16" high weepslot	4	Ends of exterior vertical sill leg

Installation: The test unit was installed into the 2" x 8" nominal Spruce-Pine-Fir #2 wood test buck utilizing the integral nailing fin and 1" roofing nails. Five per top, bottom, and sides of the nail fin were evenly spaced. The nail fin was bedded in a silicone sealant.

ALLEN N. REEVES
CERTIFICATE
NO. 18994
STATE OF
FLORIDA
PROFESSIONAL ENGINEER

Allen N. Reeves
28 MARCH 2002

Test Results

The results are tabulated as follows:

Title of Test - Test Method	Results	Allowed
Air Infiltration per ASTM E 283-91		
@ 0.56 psf (15 mph)	0.15 cfm/ft^2	0.30 cfm/ft^2
@ 1.57 psf (25 mph)	0.29 cfm/ft^2	0.30 cfm/ft^2
Water Resistance per ASTM E 547-96 (with and without screen) WTP = 5.25 psf	No leakage	No leakage
Uniform Load Structural per ASTM E 330-97 (Measurements reported were taken on the meeting rail) (load held for 33 seconds)		
@ 47.0 psf (exterior)	0.010"	0.24" max.
@ 47.0 psf (interior)	0.015"	0.24" max.

Note: No end measurements were taken on the member measured. The measurements stated above include displacement as well as bending. Only permanent sets were recorded, not deflection measurements. This statement applies to all uniform load tests performed.

Uniform Load Structural per ASTM E 330-97 (Measurements reported were taken on the meeting rail) (load held for 10 seconds)		
@ 70.5 psf (exterior)	0.060"	0.24" max
@ 70.5 psf (interior)	0.040"	0.24" max

Detailed drawings, representative samples of the test specimen, and a copy of this report will be retained by ATI for a period of four years. The above results were secured by using the designated test methods and they indicate compliance with the performance requirements of the above referenced specification. This report does not constitute certification of this product which may only be granted by the certification program administrator.

For ARCHITECTURAL TESTING, INC:

Scott D. Kramer
Technician

Allen N. Reeves, P.E.
Director – Engineering Services
28 MARCH 2002

ALLEN N. REEVES
CERTIFICATE
NO. 18906
STATE OF
FLORIDA
PROFESSIONAL ENGINEER

SDK:nlb/baw
01-36060.02

Roof Plane Sheathing Area = 3902 sq. ft

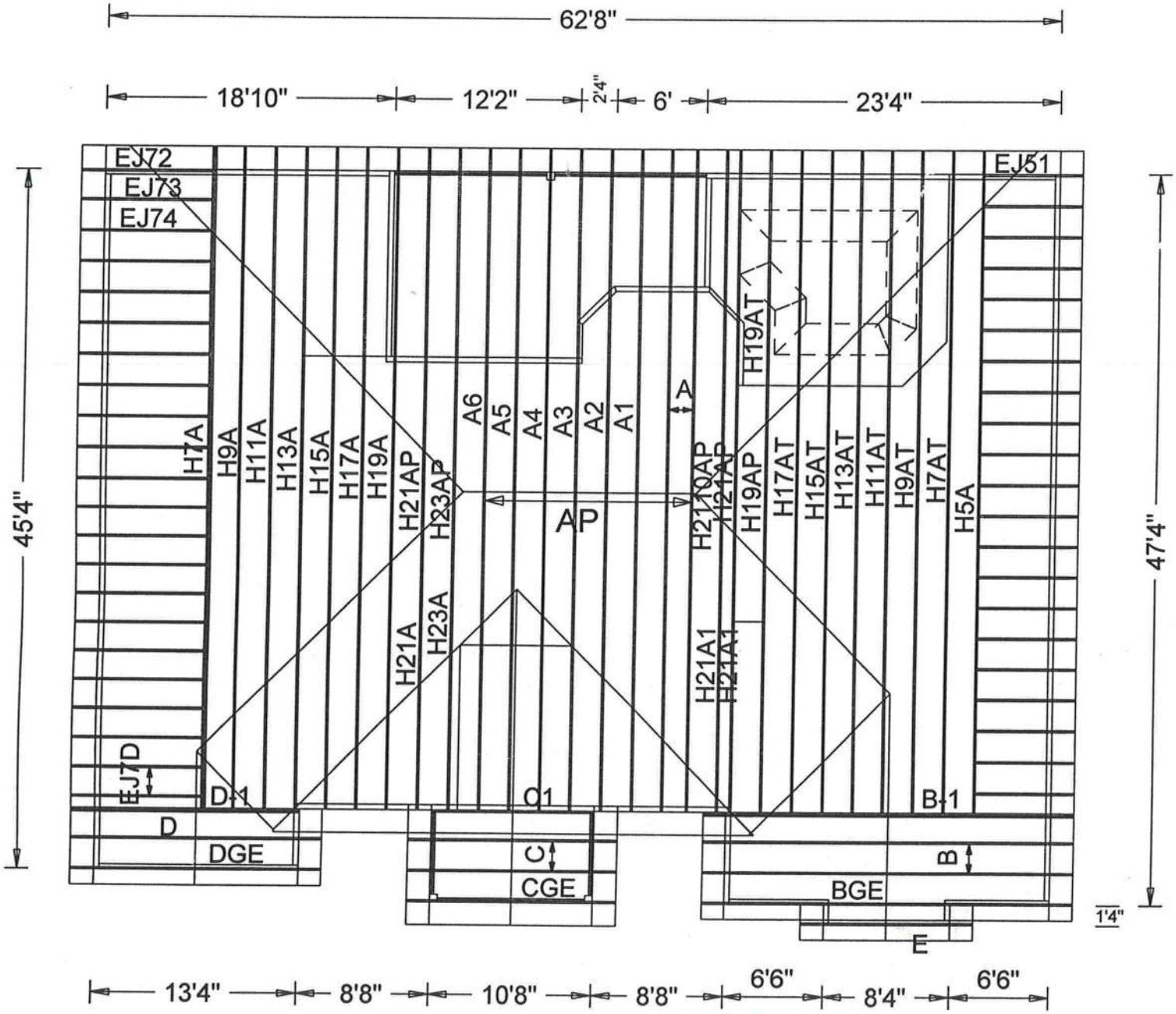

SIMQUE CONST/LOT 83 CALLOWAY

office

JOB LOCATION:

JOB DESCRIPTION: SIMQUE HOMES / LOT 83 CALLOWA

DESIGNED BY:

JOB NO: 080

PAGE NO: 1 OF 1

Alpine Engineered Products, Inc.

1950 Marley Drive Haines City, FL 33844 (863) 422-8685
Florida Engineering Certificate of Authorization Number: 567
 Document ID:1SAP487-Z0425095659

Truss Fabricator: Anderson Truss Company
Job Identification: 080-SIMQUE HOMES / LOT 83 CALLOWAY (080|-SIMQUE HOMES / LOT 83 CALLOWAY)
Truss Count: 47
Model Code: Florida Building Code 2001
Truss Criteria: ANSI/TPI-1995
Engineering Software: Alpine Software,Version 6.10.
Structural Engineer of Record:
Address:
Minimum Design Loads: Roof - 47 PSF @ 1.33 Duration
Floor - N/A
Wind - 110 MPH ASCE-98 -Closed

Seal Date: 02/25/2004

-Truss Design Engineer-
Manuel Martinez
Florida License Number: 47182
1950 Marley Drive
Haines City, FL 33844

Notes:

1. Determination as to the suitability of these truss components for the structure is the responsibility of the building designer/engineer of record, as defined in ANSI/TPI 1-1995 Section 2.2
2. The seal date shown on the individual truss component drawings must match the seal date on this index sheet.
3. As shown on attached drawings; the drawing number is preceded by: HCUSR487

Details: CNBRGBLK-BRCLBSUB

#	Ref Description	Drawing#	Date
1	84270--H5A	04056093	02/25/04
2	84271--H7AT	04056094	02/25/04
3	84272--H9AT	04056095	02/25/04
4	84273--H11AT	04056096	02/25/04
5	84274--H13AT	04056097	02/25/04
6	84275--H15AT	04056098	02/25/04
7	84276--H17AT	04056099	02/25/04
8	84277--H19AT	04056100	02/25/04
9	84278--H21A1	04056090	02/25/04
10	84279--A	04056101	02/25/04
11	84280--A1	04056102	02/25/04
12	84281--A2	04056103	02/25/04
13	84282--A4	04056104	02/25/04
14	84283--A3	04056105	02/25/04
15	84284--A5	04056106	02/25/04
16	84285--A6	04056107	02/25/04
17	84286--H23A	04056108	02/25/04
18	84287--H21A	04056084	02/25/04
19	84288--H19A	04056072	02/25/04
20	84289--H7A	04056109	02/25/04
21	84290--H17A	04056069	02/25/04
22	84291--H15A	04056091	02/25/04
23	84292--H13A	04056092	02/25/04
24	84293--H11A	04056110	02/25/04
25	84294--H9A	04056111	02/25/04
26	84295--BGE	04056071	02/25/04
27	84296--B	04056070	02/25/04
28	84297--B-1	04056112	02/25/04
29	84298--CGE	04056082	02/25/04
30	84299--C	04056079	02/25/04
31	84300--C1	04056078	02/25/04
32	84301--DGE	04056067	02/25/04
33	84302--D	04056068	02/25/04
34	84303--D-1	04056113	02/25/04
35	84304--E	04056083	02/25/04
36	84305--EJ5	04056081	02/25/04
37	84306--EJ7	04056077	02/25/04
38	84307--EJ7D	04056073	02/25/04
39	84308--EJ74	04056076	02/25/04
40	84309--EJ73	04056075	02/25/04
41	84310--EJ72	04056074	02/25/04
42	84311--EJ51	04056080	02/25/04
43	84312--H19AP	04056085	02/25/04
44	84313--H2108AP	04056086	02/25/04
45	84314--AP	04056087	02/25/04
46	84315--H23AP	04056088	02/25/04
47	84316--H21AP	04056089	02/25/04

Top chord 2x6 SP #1 Dense :T1 2x4 SP #2 Dense:
:T4 2x6 SP #2:
Bot chord 2x6 SP 2400f-2.0E :B1 2x6 SP #1 Dense:
Webs 2x4 SP #3 :W4, W14 2x6 SP #2:
:W6, W12 2x4 SP #2 Dense:

Bearing blocks: Nail type: 12d_common_nails

BRG	X-LOC	#BLOCKS	LENGTH/BLK	#NAILS/BLK	WALL PLATE
1	0.000'	1	12"	4	Match Truss

Bearing block to be same size and species as bottom chord.
Refer to drawing CNBRGBLK0503 for additional information.

110 mph wind, 15.00 ft mean hgt, ASCE 7-98, CLOSED bldg, Located anywhere in roof, CAT II, EXP B, wind TC DL=5.0 psf, wind BC DL=5.0 psf.

Calculated horizontal deflection is 0.17" due to live load and 0.10" due to dead load.

(A) 1x4 "T" brace. 80% length of web member. Same species & grade or better. Attach with 8d nails @ 6" OC.

SPECIAL LOADS
------(LUMBER DUR.FAC.=1.33 / PLATE DUR.FAC.=1.33)
TC - From 74 PLF at -1.50 to 74 PLF at 41.33
BC - From 4 PLF at -1.50 to 4 PLF at 0.00
BC - From 20 PLF at 0.00 to 20 PLF at 41.33
TC - 54 LB Conc. Load at 0.06
TC - 146 LB Conc. Load at 2.06, 4.06, 6.06, 8.06, 10.06
12.06, 14.06, 16.06, 18.06, 20.06, 22.06, 24.06, 26.06, 28.06
30.06, 32.06, 34.06, 36.06, 38.06, 40.06
BC - 54 LB Conc. Load at 0.06
BC - 49 LB Conc. Load at 2.06, 4.06, 6.06, 8.06, 10.06
12.06, 14.06, 16.06, 18.06, 20.06, 22.06, 24.06, 26.06, 28.06
30.06, 32.06, 34.06, 36.06, 38.06, 40.06

End verticals not exposed to wind pressure.

H = recommended connection based on manufacturer tested capacities and calculations. Conditions may exist that require different connections than indicated. Refer to manufacturer publication for additional information.

Deflection meets L/240 live and L/180 total load.

Calculated vertical deflection is 0.89" due to live load and 0.50" due to dead load at X = 21-8-0.

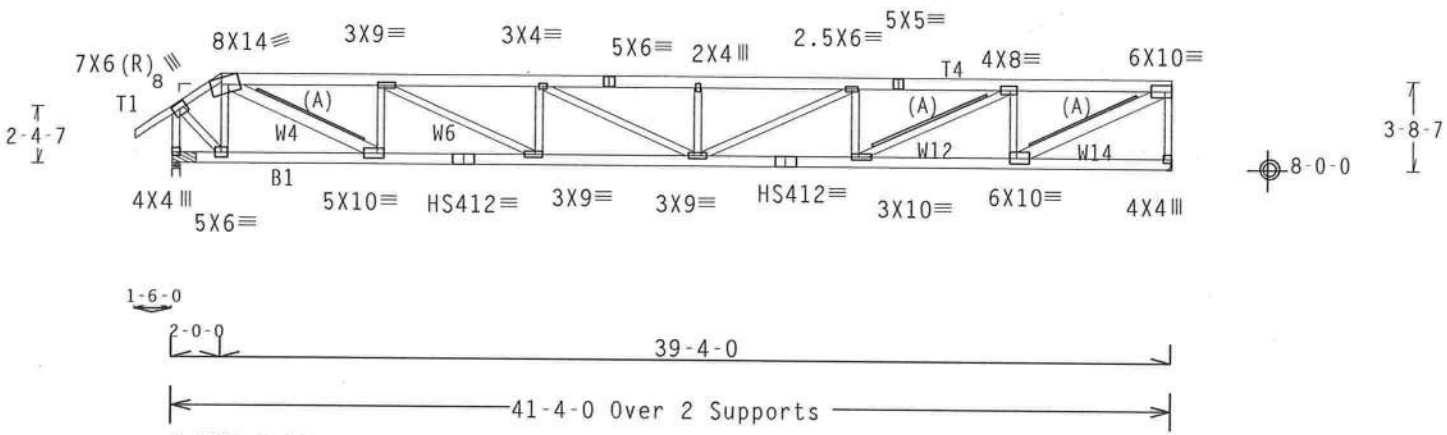

R=4078 U=1480 W=4"

R=3924 U=1356 H=Simpson HGUS28
w/ (12) [illegible]"x2.5" nails in Truss
w/ [illegible] 16d [illegible] 3.5" nails in Girder
Gi[illegible] 12.2[illegible] Pine

PLT TYP. 20 Gauge HS,Wave TPI Design Crit: TPI-1995(STD) 6.10 [illegible] 01.1 FL/-/4/-/-/R/- Scale =.125"/Ft.

ALPINE
Alpine Engineered Products, Inc.
1950 Marley Drive
Haines City, FL 33844
FL Certificate of Authorization # 567

WARNING TRUSSES REQUIRE EXTREME CARE IN FABRICATION, HANDLING, SHIPPING, INSTALLING AND BRACING. REFER TO BCSI 1-03 (BUILDING COMPONENT SAFETY INFORMATION), PUBLISHED BY TPI (TRUSS PLATE INSTITUTE, 583 D'ONOFRIO DR., SUITE 200, MADISON, WI 53719) AND WTCA (WOOD TRUSS COUNCIL OF AMERICA, 6300 ENTERPRISE LN, MADISON, WI 53719) FOR SAFETY PRACTICES PRIOR TO PERFORMING THESE FUNCTIONS. UNLESS OTHERWISE INDICATED, TOP CHORD SHALL HAVE PROPERLY ATTACHED STRUCTURAL PANELS AND BOTTOM CHORD SHALL HAVE A PROPERLY ATTACHED RIGID CEILING.

IMPORTANT FURNISH A COPY OF THIS DESIGN TO THE INSTALLATION CONTRACTOR. ALPINE ENGINEERED PRODUCTS, INC. SHALL NOT BE RESPONSIBLE FOR ANY DEVIATION FROM THIS DESIGN; ANY FAILURE TO BUILD THE TRUSS IN CONFORMANCE WITH TPI; OR FABRICATING, HANDLING, SHIPPING, INSTALLING & BRACING OF TRUSSES. DESIGN CONFORMS WITH APPLICABLE PROVISIONS OF NDS (NATIONAL DESIGN SPEC, BY AF&PA) AND TPI. ALPINE CONNECTOR PLATES ARE MADE OF 20/18/16GA (W,H/S/K) ASTM A653 GRADE 40/60 (W, K/H,S) GALV. STEEL. APPLY PLATES TO EACH FACE OF TRUSS AND, UNLESS OTHERWISE LOCATED ON THIS DESIGN, POSITION PER DRAWINGS 160A-Z. ANY INSPECTION OF PLATES FOLLOWED BY (1) SHALL BE PER ANNEX A3 OF TPI1-2002 SEC.3. A SEAL ON THIS DRAWING INDICATES ACCEPTANCE OF PROFESSIONAL ENGINEERING RESPONSIBILITY SOLELY FOR THE TRUSS COMPONENT DESIGN SHOWN. THE SUITABILITY AND USE OF THIS COMPONENT FOR ANY BUILDING IS THE RESPONSIBILITY OF THE BUILDING DESIGNER PER ANSI/TPI 1 SEC. 2.

MANUEL MARTINEZ
CERTIFICATE
No. 47182
STATE OF FLORIDA
PROFESSIONAL ENGINEER
[illegible] 04

C LL	30.0 PSF	REF R487-- 84270
C DL	7.0 PSF	DATE 02/25/04
C DL	10.0 PSF	DRW HCUSR487 04056093
C LL	0.0 PSF	HC-ENG JB/MMA
TOT.LD.	47.0 PSF	SEQN- 27551
DUR.FAC.	1.33	FROM JP
SPACING	24.0"	JREF- 1SAP487_Z04

(080-SIMQUE HOMES / LOT 83 CALLOWAY - H7AT)

Top chord 2x4 SP #2 Dense
Bot chord 2x4 SP #2 Dense
Webs 2x4 SP #3 :W5, W6 2x4 SP #2 Dense:

H = recommended connection based on manufacturer tested capacities and calculations. Conditions may exist that require different connections than indicated. Refer to manufacturer publication for additional information.

110 mph wind, 11.20 ft mean hgt, ASCE 7-98, CLOSED bldg, not located within 6.50 ft from roof edge, CAT II, EXP B, wind TC DL=5.0 psf, wind BC DL=5.0 psf.

Right end vertical not exposed to wind pressure.

Deflection meets L/240 live and L/180 total load.

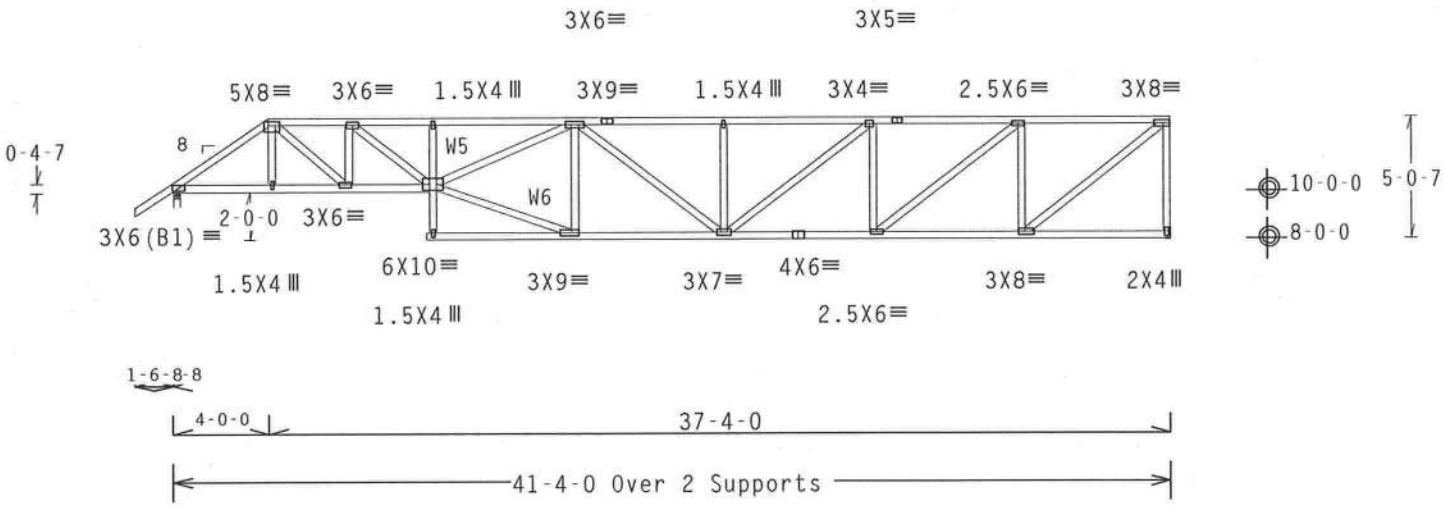

R=2071 U=362 W=3.5"

R=1931 U=309 H=Simpson HUS26
w/ (6) [illegible] 5" nails in Truss
w/ [illegible] nails in Girder
Gi[illegible]ine

PLT TYP. Wave TPI | Design Crit: TPI-1995(STD) | 6.10 [illegible] FL/-/4/-/-/R/- | Scale =.125"/Ft.

ALPINE
Alpine Engineered Products, Inc.
1950 Marley Drive
Haines City, FL 33844

WARNING TRUSSES REQUIRE EXTREME CARE IN FABRICATION, HANDLING, SHIPPING, INSTALLING AND BRACING. REFER TO BCSI 1-03 (BUILDING COMPONENT SAFETY INFORMATION), PUBLISHED BY TPI (TRUSS PLATE INSTITUTE, 583 D'ONOFRIO DR., SUITE 200, MADISON, WI 53719) AND WTCA (WOOD TRUSS COUNCIL OF AMERICA, 6300 ENTERPRISE LN, MADISON, WI 53719) FOR SAFETY PRACTICES PRIOR TO PERFORMING THESE FUNCTIONS. UNLESS OTHERWISE INDICATED, TOP CHORD SHALL HAVE PROPERLY ATTACHED STRUCTURAL PANELS AND BOTTOM CHORD SHALL HAVE A PROPERLY ATTACHED RIGID CEILING.

IMPORTANT FURNISH A COPY OF THIS DESIGN TO THE INSTALLATION CONTRACTOR. ALPINE ENGINEERED PRODUCTS, INC. SHALL NOT BE RESPONSIBLE FOR ANY DEVIATION FROM THIS DESIGN; ANY FAILURE TO BUILD THE TRUSS IN CONFORMANCE WITH TPI; OR FABRICATING, HANDLING, SHIPPING, INSTALLING & BRACING OF TRUSSES. DESIGN CONFORMS WITH APPLICABLE PROVISIONS OF NDS (NATIONAL DESIGN SPEC, BY AF&PA) AND TPI. ALPINE CONNECTOR PLATES ARE MADE OF 20/18/16GA (W,H/S/K) ASTM A653 GRADE 40/60 (W, K/H,S) GALV. STEEL. APPLY PLATES TO EACH FACE OF TRUSS AND, UNLESS OTHERWISE LOCATED ON THIS DESIGN, POSITION PER DRAWINGS 160A-Z. ANY INSPECTION OF PLATES FOLLOWED BY (1) SHALL BE PER ANNEX A3 OF TPI1-2002 SEC.3. A SEAL ON THIS DRAWING INDICATES ACCEPTANCE OF PROFESSIONAL ENGINEERING RESPONSIBILITY SOLELY FOR THE TRUSS COMPONENT DESIGN SHOWN. THE SUITABILITY AND USE OF THIS COMPONENT FOR ANY BUILDING IS THE RESPONSIBILITY OF THE BUILDING DESIGNER PER ANSI/TPI 1 SEC. 2.

MANUEL MARTINEZ CERTIFICATE No. 47182 STATE OF FLORIDA PROFESSIONAL ENGINEER
Feb 5, 2004

TC LL	30.0 PSF	REF	R487-- 84271
TC DL	7.0 PSF	DATE	02/25/04
BC DL	10.0 PSF	DRW	HCUSR487 04056094
BC LL	0.0 PSF	HC-ENG	JB/MMA
TOT.LD.	47.0 PSF	SEQN-	44203
DUR.FAC.	1.33	FROM	JP
SPACING	24.0"	JREF-	1SAP487_Z04

(080-SIMQUE HOMES / LOT 83 CALLOWAY - H9AT)

Top chord 2x4 SP #2 Dense
Bot chord 2x4 SP #2 Dense
Webs 2x4 SP #3 :W6 2x4 SP #2 Dense:

H = recommended connection based on manufacturer tested capacities and calculations. Conditions may exist that require different connections than indicated. Refer to manufacturer publication for additional information.

Deflection meets L/240 live and L/180 total load.

110 mph wind, 11.87 ft mean hgt, ASCE 7-98, CLOSED bldg, not located within 6.50 ft from roof edge, CAT II, EXP B, wind TC DL=5.0 psf, wind BC DL=5.0 psf.

Right end vertical not exposed to wind pressure.

(A) 1x4 "T" brace. 80% length of web member. Same species & grade or better. Attach with 8d nails @ 6" OC.

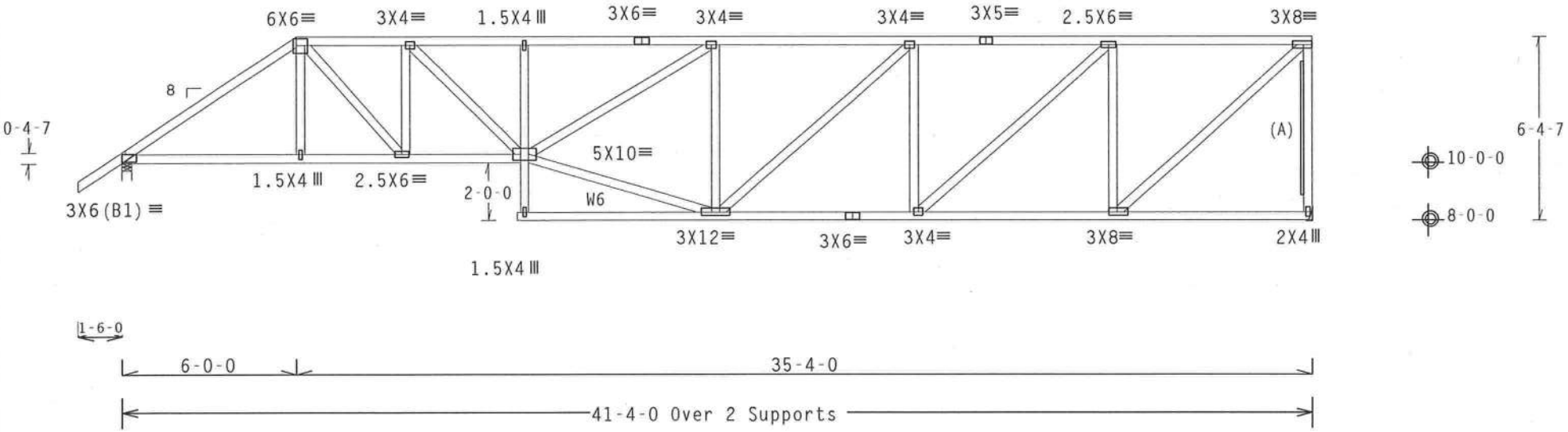

R=2076 U=355 W=4"

R=1926 U=310 H=Simpson HUS26
w/ (6) 16d, 0.162"x2.5" nails in Truss
w/ (14) 16d, 0.162"x2.5" nails in Girder
Girder is (2)2X6 min. So.Pine

PLT TYP. Wave TPI | Design Crit: TPI-1995(STD) | 6.10 | FL/-/4/-/-/R/- | Scale =.1875"/Ft.

ALPINE
Alpine Engineered Products, Inc.
1950 Marley Drive
Haines City, FL 33844

WARNING TRUSSES REQUIRE EXTREME CARE IN FABRICATION, HANDLING, SHIPPING, INSTALLING AND BRACING. REFER TO BCSI 1-03 (BUILDING COMPONENT SAFETY INFORMATION), PUBLISHED BY TPI (TRUSS PLATE INSTITUTE, 583 D'ONOFRIO DR., SUITE 200, MADISON, WI 53719) AND WTCA (WOOD TRUSS COUNCIL OF AMERICA, 6300 ENTERPRISE LN, MADISON, WI 53719) FOR SAFETY PRACTICES PRIOR TO PERFORMING THESE FUNCTIONS. UNLESS OTHERWISE INDICATED, TOP CHORD SHALL HAVE PROPERLY ATTACHED STRUCTURAL PANELS AND BOTTOM CHORD SHALL HAVE A PROPERLY ATTACHED RIGID CEILING.

IMPORTANT FURNISH A COPY OF THIS DESIGN TO THE INSTALLATION CONTRACTOR. ALPINE ENGINEERED PRODUCTS, INC. SHALL NOT BE RESPONSIBLE FOR ANY DEVIATION FROM THIS DESIGN; ANY FAILURE TO BUILD THE TRUSS IN CONFORMANCE WITH TPI; OR FABRICATING, HANDLING, SHIPPING, INSTALLING & BRACING OF TRUSSES. DESIGN CONFORMS WITH APPLICABLE PROVISIONS OF NDS (NATIONAL DESIGN SPEC, BY AF&PA) AND TPI. ALPINE CONNECTOR PLATES ARE MADE OF 20/18/16GA (W,H/S/K) ASTM A653 GRADE 40/60 (W, K/H,S) GALV. STEEL. APPLY PLATES TO EACH FACE OF TRUSS AND, UNLESS OTHERWISE LOCATED ON THIS DESIGN, POSITION PER DRAWINGS 160A-Z. ANY INSPECTION OF PLATES FOLLOWED BY (1) SHALL BE PER ANNEX A3 OF TPI1-2002 SEC.3. A SEAL ON THIS DRAWING INDICATES ACCEPTANCE OF PROFESSIONAL ENGINEERING RESPONSIBILITY SOLELY FOR THE TRUSS COMPONENT DESIGN SHOWN. THE SUITABILITY AND USE OF THIS COMPONENT FOR ANY BUILDING IS THE RESPONSIBILITY OF THE BUILDING DESIGNER PER ANSI/TPI 1 SEC. 2.

MANUEL MARTINEZ CERTIFICATE No. 47182 STATE OF FLORIDA PROFESSIONAL ENGINEER

TC LL	30.0 PSF	REF	R487-- 84272
★TC DL	7.0 PSF	DATE	02/25/04
BC DL	10.0 PSF	DRW	HCUSR487 04056095
BC LL	0.0 PSF	HC-ENG	JB/MMA
TOT.LD.	47.0 PSF	SEQN-	44215
DUR.FAC.	1.33	FROM	JP
SPACING	24.0"	JREF-	1SAP487 Z04

(080-SIMQUE HOMES / LOT 83 CALLOWAY - H11AT)

Top chord 2x4 SP #2 Dense
Bot chord 2x4 SP #2 Dense
Webs 2x4 SP #3

H = recommended connection based on manufacturer tested capacities and calculations. Conditions may exist that require different connections than indicated. Refer to manufacturer publication for additional information.

Deflection meets L/240 live and L/180 total load.

110 mph wind, 12.54 ft mean hgt, ASCE 7-98, CLOSED bldg, not located within 6.50 ft from roof edge, CAT II, EXP B, wind TC DL=5.0 psf, wind BC DL=5.0 psf.

Right end vertical not exposed to wind pressure.

(A) Continuous lateral bracing equally spaced on member.

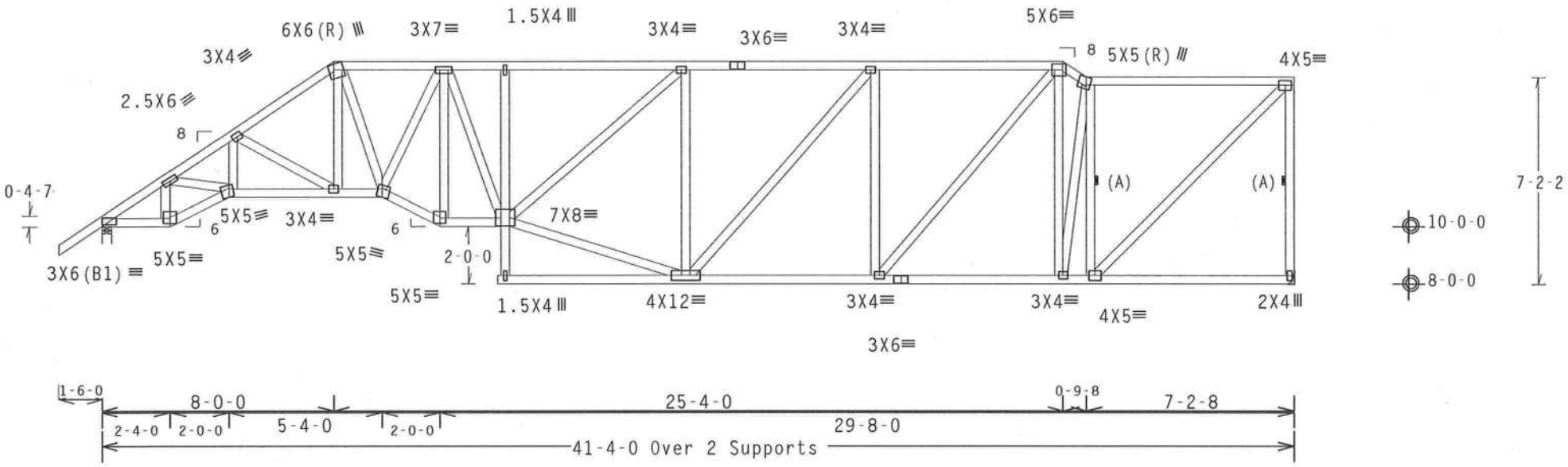

R=2076 U=344 W=4"

R=1926 U=308 H=Simpson HUS26
(6) 16d, 0.162"x2.5" nails in Truss
(6) 16d, 0.162"x2.5" nails in Girder
(1) 2X6 min. So.Pine

PLT TYP. Wave TPI | Design Crit: TPI-1995(STD) | 6.10 | FL/-/4/-/-/R/- | Scale =.1875"/Ft.

ALPINE
Alpine Engineered Products, Inc.
1950 Marley Drive
Haines City, FL 33844
FL Certificate of Authorization # 567

WARNING TRUSSES REQUIRE EXTREME CARE IN FABRICATION, HANDLING, SHIPPING, INSTALLING AND BRACING. REFER TO BCSI 1-03 (BUILDING COMPONENT SAFETY INFORMATION), PUBLISHED BY TPI (TRUSS PLATE INSTITUTE, 583 D'ONOFRIO DR., SUITE 200, MADISON, WI 53719) AND WTCA (WOOD TRUSS COUNCIL OF AMERICA, 6300 ENTERPRISE LN, MADISON, WI 53719) FOR SAFETY PRACTICES PRIOR TO PERFORMING THESE FUNCTIONS. UNLESS OTHERWISE INDICATED, TOP CHORD SHALL HAVE PROPERLY ATTACHED STRUCTURAL PANELS AND BOTTOM CHORD SHALL HAVE A PROPERLY ATTACHED RIGID CEILING.

IMPORTANT FURNISH A COPY OF THIS DESIGN TO THE INSTALLATION CONTRACTOR. ALPINE ENGINEERED PRODUCTS, INC. SHALL NOT BE RESPONSIBLE FOR ANY DEVIATION FROM THIS DESIGN; ANY FAILURE TO BUILD THE TRUSS IN CONFORMANCE WITH TPI; OR FABRICATING, HANDLING, SHIPPING, INSTALLING & BRACING OF TRUSSES. DESIGN CONFORMS WITH APPLICABLE PROVISIONS OF NDS (NATIONAL DESIGN SPEC, BY AF&PA) AND TPI. ALPINE CONNECTOR PLATES ARE MADE OF 20/18/16GA (W,H/S/K) ASTM A653 GRADE 40/60 (W, K/H,S) GALV. STEEL. APPLY PLATES TO EACH FACE OF TRUSS AND, UNLESS OTHERWISE LOCATED ON THIS DESIGN, POSITION PER DRAWINGS 160A-Z. ANY INSPECTION OF PLATES FOLLOWED BY (1) SHALL BE PER ANNEX A3 OF TPI1-2002 SEC.3. A SEAL ON THIS DRAWING INDICATES ACCEPTANCE OF PROFESSIONAL ENGINEERING RESPONSIBILITY SOLELY FOR THE TRUSS COMPONENT DESIGN SHOWN. THE SUITABILITY AND USE OF THIS COMPONENT FOR ANY BUILDING IS THE RESPONSIBILITY OF THE BUILDING DESIGNER PER ANSI/TPI 1 SEC. 2.

MANUEL MARTINEZ CERTIFICATE No. 47182 STATE OF FLORIDA PROFESSIONAL ENGINEER
Feb 25, 04

TC LL	30.0 PSF	REF	R487-- 84273
TC DL	7.0 PSF	DATE	02/25/04
BC DL	10.0 PSF	DRW	HCUSR487 04056096
BC LL	0.0 PSF	HC-ENG	JB/MMA
TOT.LD.	47.0 PSF	SEQN-	44274
DUR.FAC.	1.33	FROM	JP
SPACING	24.0"	JREF-	1SAP487 Z04

(080-SIMQUE HOMES / LOT 83 CALLOWAY - H13AT)

Top chord 2x4 SP #2 Dense
Bot chord 2x4 SP #2 Dense
Webs 2x4 SP #3

H = recommended connection based on manufacturer tested capacities and calculations. Conditions may exist that require different connections than indicated. Refer to manufacturer publication for additional information.

Deflection meets L/240 live and L/180 total load.

110 mph wind, 13.20 ft mean hgt, ASCE 7-98, CLOSED bldg, not located within 6.50 ft from roof edge, CAT II, EXP B, wind TC DL=5.0 psf, wind BC DL=5.0 psf.

Right end vertical not exposed to wind pressure.

(A) Continuous lateral bracing equally spaced on member.

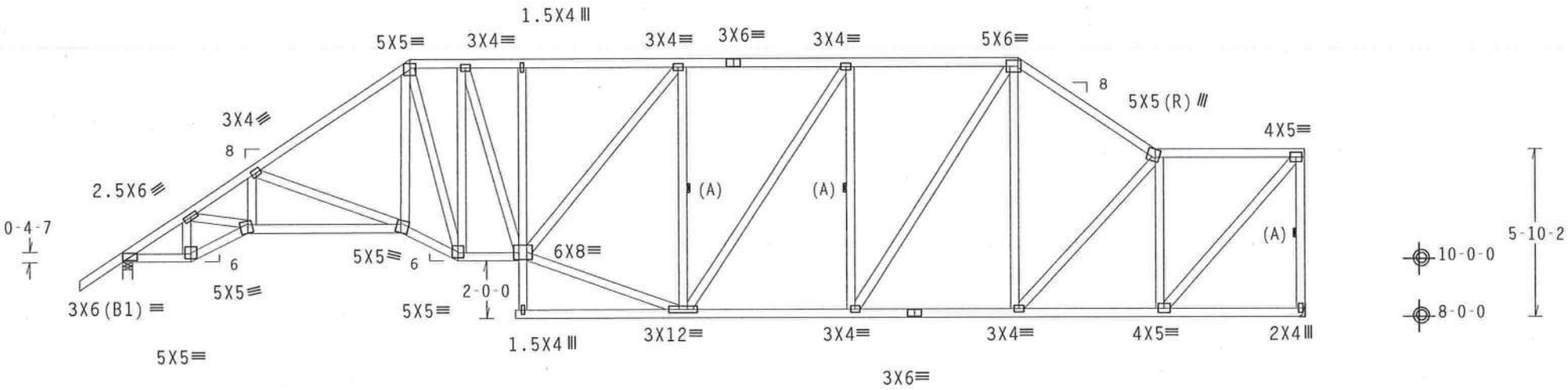

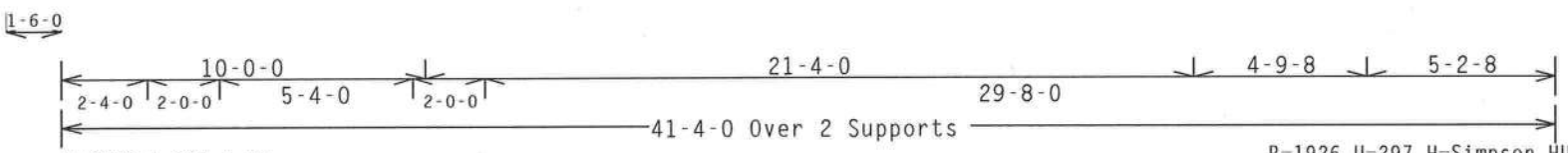

R=2076 U=343 W=4"

R=1926 U=297 H=Simpson HUS26
w/ (6) 16d, 0.162"x2.5" nails in Truss
(14) 16d, 0.162"x2.5" nails in Girder
[illegible]er is (2)2X6 min. So.Pine

PLT TYP. Wave TPI | Design Crit: TPI-1995(STD) | 6.10 [illegible] 1 | FL/-/4/-/-/R/- | Scale =.1875"/Ft.

ALPINE
Alpine Engineered Products, Inc.
1950 Marley Drive
Haines City, FL 33844
FL Certificate of Authorization # 567

WARNING TRUSSES REQUIRE EXTREME CARE IN FABRICATION, HANDLING, SHIPPING, INSTALLING AND BRACING. REFER TO BCSI 1-03 (BUILDING COMPONENT SAFETY INFORMATION), PUBLISHED BY TPI (TRUSS PLATE INSTITUTE, 583 D'ONOFRIO DR., SUITE 200, MADISON, WI 53719) AND WTCA (WOOD TRUSS COUNCIL OF AMERICA, 6300 ENTERPRISE LN, MADISON, WI 53719) FOR SAFETY PRACTICES PRIOR TO PERFORMING THESE FUNCTIONS. UNLESS OTHERWISE INDICATED, TOP CHORD SHALL HAVE PROPERLY ATTACHED STRUCTURAL PANELS AND BOTTOM CHORD SHALL HAVE A PROPERLY ATTACHED RIGID CEILING.

IMPORTANT FURNISH A COPY OF THIS DESIGN TO THE INSTALLATION CONTRACTOR. ALPINE ENGINEERED PRODUCTS, INC. SHALL NOT BE RESPONSIBLE FOR ANY DEVIATION FROM THIS DESIGN; ANY FAILURE TO BUILD THE TRUSS IN CONFORMANCE WITH TPI; OR FABRICATING, HANDLING, SHIPPING, INSTALLING & BRACING OF TRUSSES. DESIGN CONFORMS WITH APPLICABLE PROVISIONS OF NDS (NATIONAL DESIGN SPEC, BY AF&PA) AND TPI. ALPINE CONNECTOR PLATES ARE MADE OF 20/18/16GA (W,H/S/K) ASTM A653 GRADE 40/60 (W, K/H,S) GALV. STEEL. APPLY PLATES TO EACH FACE OF TRUSS AND, UNLESS OTHERWISE LOCATED ON THIS DESIGN, POSITION PER DRAWINGS 160A-Z. ANY INSPECTION OF PLATES FOLLOWED BY (1) SHALL BE PER ANNEX A3 OF TPI1-2002 SEC.3. A SEAL ON THIS DRAWING INDICATES ACCEPTANCE OF PROFESSIONAL ENGINEERING RESPONSIBILITY SOLELY FOR THE TRUSS COMPONENT DESIGN SHOWN. THE SUITABILITY AND USE OF THIS COMPONENT FOR ANY BUILDING IS THE RESPONSIBILITY OF THE BUILDING DESIGNER PER ANSI/TPI 1 SEC. 2.

MANUEL MARTINEZ
CERTIFICATE
No. 47182
STATE OF FLORIDA
PROFESSIONAL ENGINEER
2/25/04

TC LL	30.0 PSF	REF	R487-- 84274
TC DL	7.0 PSF	DATE	02/25/04
BC DL	10.0 PSF	DRW	HCUSR487 04056097
BC LL	0.0 PSF	HC-ENG	JB/MMA
TOT.LD.	47.0 PSF	SEQN-	44291
DUR.FAC.	1.33	FROM	JP
SPACING	24.0"	JREF-	1SAP487_Z04

(080-SIMQUE HOMES / LOT 83 CALLOWAY - H15AT)

Top chord 2x4 SP #2 Dense
Bot chord 2x4 SP #2 Dense
Webs 2x4 SP #3

H = recommended connection based on manufacturer tested capacities and calculations. Conditions may exist that require different connections than indicated. Refer to manufacturer publication for additional information.

Deflection meets L/240 live and L/180 total load.

110 mph wind, 13.87 ft mean hgt, ASCE 7-98, CLOSED bldg, not located within 6.50 ft from roof edge, CAT II, EXP B, wind TC DL=5.0 psf, wind BC DL=5.0 psf.

Right end vertical not exposed to wind pressure.

(A) Continuous lateral bracing equally spaced on member.

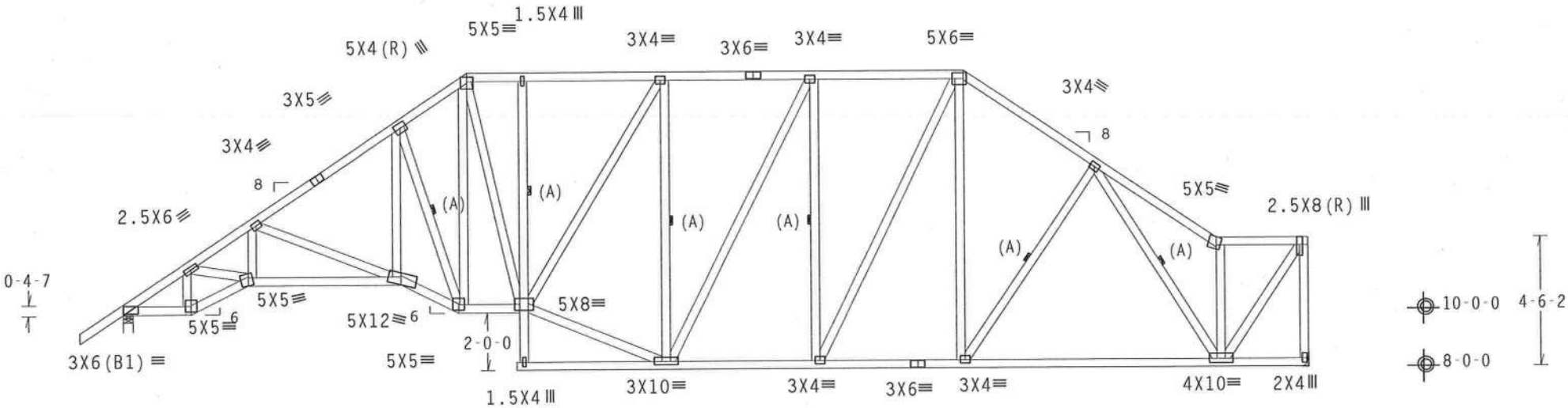

R=2076 U=342 W=4"

R=1926 U=287 H=Simpson HUS26
W/ (6) 16d, 0.162"x2.5" nails in Truss
W/ (6) 16d, 0.162"x2.5" nails in Girder
W/ (2)2X6 min. So.Pine

PLT TYP. Wave TPI | Design Crit: TPI-1995(STD) | 6.10 | FL/-/4/-/-/R/- | Scale =.1875"/Ft.

ALPINE
Alpine Engineered Products, Inc.
1950 Marley Drive
Haines City, FL 33844

WARNING TRUSSES REQUIRE EXTREME CARE IN FABRICATION, HANDLING, SHIPPING, INSTALLING AND BRACING. REFER TO BCSI 1-03 (BUILDING COMPONENT SAFETY INFORMATION), PUBLISHED BY TPI (TRUSS PLATE INSTITUTE, 583 D'ONOFRIO DR., SUITE 200, MADISON, WI 53719) AND WTCA (WOOD TRUSS COUNCIL OF AMERICA, 6300 ENTERPRISE LN, MADISON, WI 53719) FOR SAFETY PRACTICES PRIOR TO PERFORMING THESE FUNCTIONS. UNLESS OTHERWISE INDICATED, TOP CHORD SHALL HAVE PROPERLY ATTACHED STRUCTURAL PANELS AND BOTTOM CHORD SHALL HAVE A PROPERLY ATTACHED RIGID CEILING.

IMPORTANT FURNISH A COPY OF THIS DESIGN TO THE INSTALLATION CONTRACTOR. ALPINE ENGINEERED PRODUCTS, INC. SHALL NOT BE RESPONSIBLE FOR ANY DEVIATION FROM THIS DESIGN; ANY FAILURE TO BUILD THE TRUSS IN CONFORMANCE WITH TPI; OR FABRICATING, HANDLING, SHIPPING, INSTALLING & BRACING OF TRUSSES. DESIGN CONFORMS WITH APPLICABLE PROVISIONS OF NDS (NATIONAL DESIGN SPEC, BY AF&PA) AND TPI. ALPINE CONNECTOR PLATES ARE MADE OF 20/18/16GA (W,H/S/K) ASTM A653 GRADE 40/60 (W, K/H,S) GALV. STEEL. APPLY PLATES TO EACH FACE OF TRUSS AND, UNLESS OTHERWISE LOCATED ON THIS DESIGN, POSITION PER DRAWINGS 160A-Z. ANY INSPECTION OF PLATES FOLLOWED BY (1) SHALL BE PER ANNEX A3 OF TPI1-2002 SEC.3. A SEAL ON THIS DRAWING INDICATES ACCEPTANCE OF PROFESSIONAL ENGINEERING RESPONSIBILITY SOLELY FOR THE TRUSS COMPONENT DESIGN SHOWN. THE SUITABILITY AND USE OF THIS COMPONENT FOR ANY BUILDING IS THE RESPONSIBILITY OF THE BUILDING DESIGNER PER ANSI/TPI 1 SEC. 2.

MANUEL MARTINEZ
CERTIFICATE
No. 47182
STATE OF FLORIDA
PROFESSIONAL ENGINEER

TC LL	30.0 PSF	REF	R487-- 84275
TC DL	7.0 PSF	DATE	02/25/04
BC DL	10.0 PSF	DRW	HCUSR487 04056098
BC LL	0.0 PSF	HC-ENG	JB/MMA
TOT.LD.	47.0 PSF	SEQN-	23349
DUR.FAC.	1.33	FROM	JP
SPACING	24.0"	JREF-	1SAP487_Z04

(080-SIMQUE HOMES / LOT 83 CALLOWAY - H17AT)

Top chord 2x4 SP #2 Dense
Bot chord 2x4 SP #2 Dense
Webs 2x4 SP #3

H = recommended connection based on manufacturer tested capacities and calculations. Conditions may exist that require different connections than indicated. Refer to manufacturer publication for additional information.

Deflection meets L/240 live and L/180 total load.

110 mph wind, 14.54 ft mean hgt, ASCE 7-98, CLOSED bldg, not located within 6.50 ft from roof edge, CAT II, EXP B, wind TC DL=5.0 psf, wind BC DL=5.0 psf.

Right end vertical not exposed to wind pressure.

(A) Continuous lateral bracing equally spaced on member.

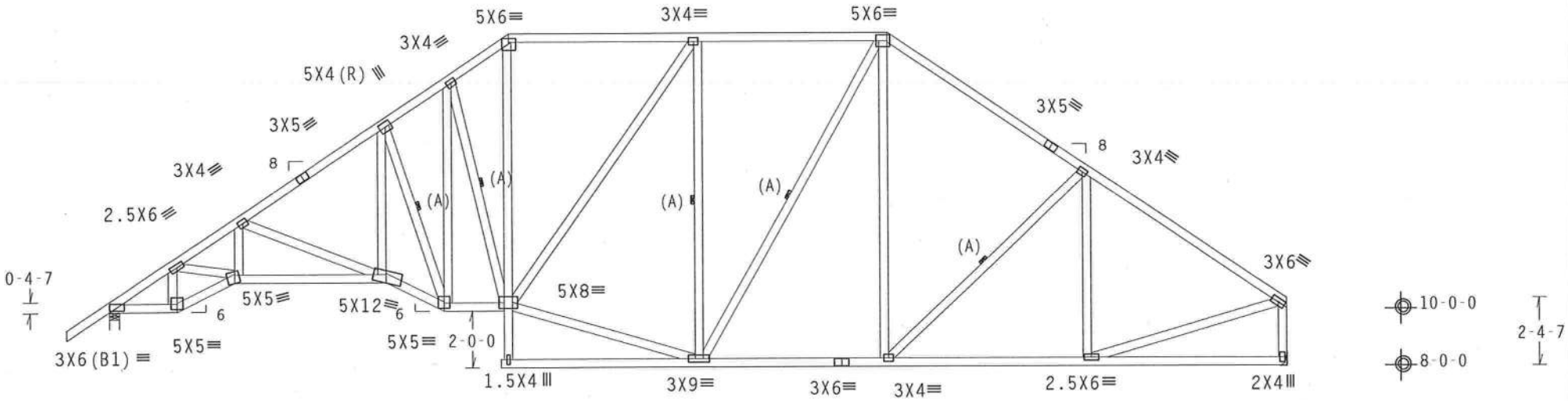

R=2076 U=339 W=4"

R=1926 U=275 H=Simpson HUS26
(6) 16d, 0.162"x2.5" nails in Truss
(4) 16d, 0.162"x2.5" nails in Girder
Girder (2)2X6 min. So.Pine

PLT TYP. Wave TPI | Design Crit: TPI-1995(STD) | 6.10 | 6.1:1 | FL/-/4/-/-/R/- | Scale =.1875"/Ft.

ALPINE
Alpine Engineered Products, Inc.
1950 Marley Drive
Haines City, FL 33844

WARNING TRUSSES REQUIRE EXTREME CARE IN FABRICATION, HANDLING, SHIPPING, INSTALLING AND BRACING. REFER TO BCSI 1-03 (BUILDING COMPONENT SAFETY INFORMATION), PUBLISHED BY TPI (TRUSS PLATE INSTITUTE, 583 D'ONOFRIO DR., SUITE 200, MADISON, WI 53719) AND WTCA (WOOD TRUSS COUNCIL OF AMERICA, 6300 ENTERPRISE LN, MADISON, WI 53719) FOR SAFETY PRACTICES PRIOR TO PERFORMING THESE FUNCTIONS. UNLESS OTHERWISE INDICATED, TOP CHORD SHALL HAVE PROPERLY ATTACHED STRUCTURAL PANELS AND BOTTOM CHORD SHALL HAVE A PROPERLY ATTACHED RIGID CEILING.

IMPORTANT FURNISH A COPY OF THIS DESIGN TO THE INSTALLATION CONTRACTOR. ALPINE ENGINEERED PRODUCTS, INC. SHALL NOT BE RESPONSIBLE FOR ANY DEVIATION FROM THIS DESIGN; ANY FAILURE TO BUILD THE TRUSS IN CONFORMANCE WITH TPI; OR FABRICATING, HANDLING, SHIPPING, INSTALLING & BRACING OF TRUSSES. DESIGN CONFORMS WITH APPLICABLE PROVISIONS OF NDS (NATIONAL DESIGN SPEC. BY AF&PA) AND TPI. ALPINE CONNECTOR PLATES ARE MADE OF 20/18/16GA (W,H/S/K) ASTM A653 GRADE 40/60 (W, K/H,S) GALV. STEEL. APPLY PLATES TO EACH FACE OF TRUSS AND, UNLESS OTHERWISE LOCATED ON THIS DESIGN, POSITION PER DRAWINGS 160A-Z. ANY INSPECTION OF PLATES FOLLOWED BY (1) SHALL BE PER ANNEX A3 OF TPI1-2002 SEC.3. A SEAL ON THIS DRAWING INDICATES ACCEPTANCE OF PROFESSIONAL ENGINEERING RESPONSIBILITY SOLELY FOR THE TRUSS COMPONENT DESIGN SHOWN. THE SUITABILITY AND USE OF THIS COMPONENT FOR ANY BUILDING IS THE RESPONSIBILITY OF THE BUILDING DESIGNER PER ANSI/TPI 1 SEC. 2.

MANUEL MARTINEZ
CERTIFICATE
No. 47182
STATE OF FLORIDA
PROFESSIONAL ENGINEER
Feb 25, 04

TC LL	30.0 PSF	REF	R487-- 84276
TC DL	7.0 PSF	DATE	02/25/04
BC DL	10.0 PSF	DRW	HCUSR487 04056099
BC LL	0.0 PSF	HC-ENG	JB/MMA
TOT.LD.	47.0 PSF	SEQN-	44329
DUR.FAC.	1.33	FROM	JP
SPACING	24.0"	JREF-	1SAP487_Z04

(080-SIMQUE HOMES / LOT 83 CALLOWAY - H19AT)

Top chord 2x4 SP #2 Dense
Bot chord 2x4 SP #2 Dense
Webs 2x4 SP #3

H = recommended connection based on manufacturer tested capacities and calculations. Conditions may exist that require different connections than indicated. Refer to manufacturer publication for additional information.

Deflection meets L/240 live and L/180 total load.

110 mph wind, 14.54 ft mean hgt, ASCE 7-98, CLOSED bldg, not located within 6.50 ft from roof edge, CAT II, EXP B, wind TC DL=5.0 psf, wind BC DL=5.0 psf.

Right end vertical not exposed to wind pressure.

(A) 1x4 "T" brace. 80% length of web member. Same species & grade or better. Attach with 8d nails @ 6" OC.

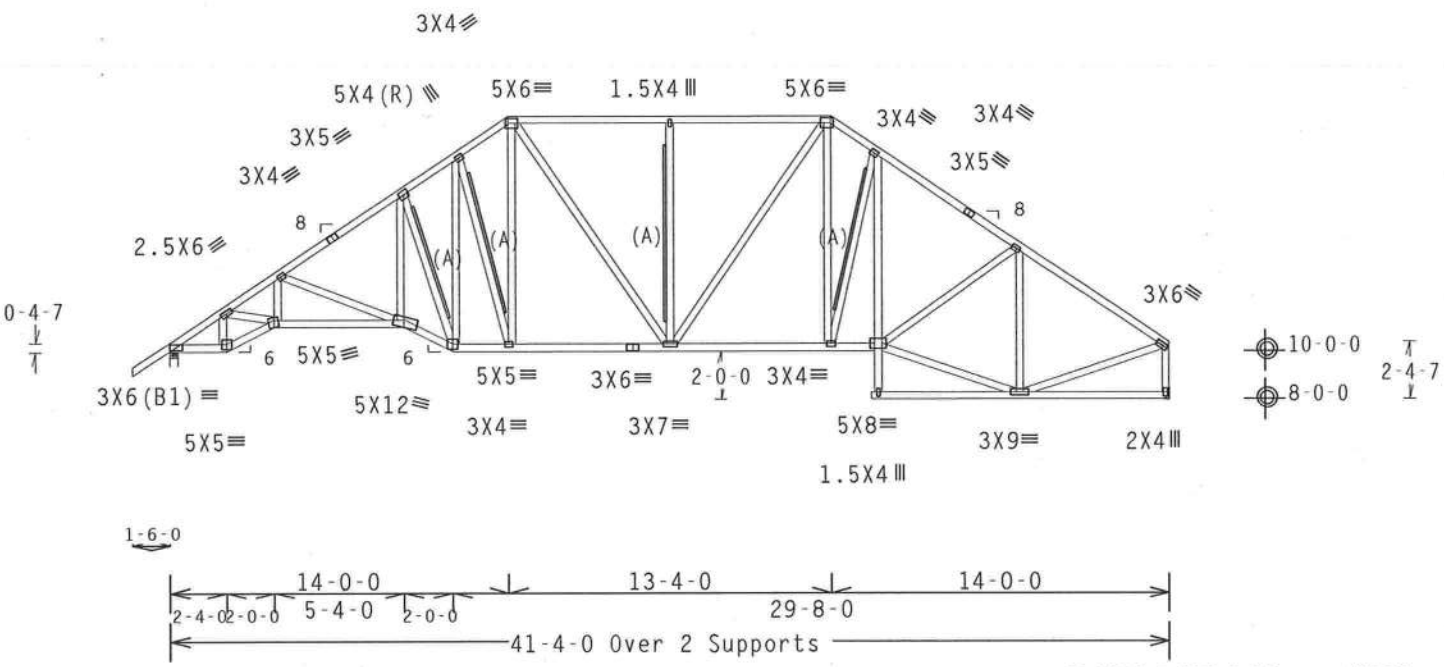

R=2076 U=339 W=4"

R=1926 U=275 H=Simpson HUS26
w/ (6) [illegible] 0.5" nails in Truss
w/ [illegible] nails in Girder
Gi[illegible] Pine

PLT TYP. Wave TPI | Design Crit: TPI-1995(STD) | 6.10 | [illegible] FL/-/4/-/-/R/- | Scale =.125"/Ft.

ALPINE
Alpine Engineered Products, Inc.
1950 Marley Drive
Haines City, FL 33844
FL Certificate of Authorization # 567

WARNING TRUSSES REQUIRE EXTREME CARE IN FABRICATION, HANDLING, SHIPPING, INSTALLING AND BRACING. REFER TO BCSI 1-03 (BUILDING COMPONENT SAFETY INFORMATION), PUBLISHED BY TPI (TRUSS PLATE INSTITUTE, 583 D'ONOFRIO DR., SUITE 200, MADISON, WI 53719) AND WTCA (WOOD TRUSS COUNCIL OF AMERICA, 6300 ENTERPRISE LN, MADISON, WI 53719) FOR SAFETY PRACTICES PRIOR TO PERFORMING THESE FUNCTIONS. UNLESS OTHERWISE INDICATED, TOP CHORD SHALL HAVE PROPERLY ATTACHED STRUCTURAL PANELS AND BOTTOM CHORD SHALL HAVE A PROPERLY ATTACHED RIGID CEILING.

IMPORTANT FURNISH A COPY OF THIS DESIGN TO THE INSTALLATION CONTRACTOR. ALPINE ENGINEERED PRODUCTS, INC. SHALL NOT BE RESPONSIBLE FOR ANY DEVIATION FROM THIS DESIGN; ANY FAILURE TO BUILD THE TRUSS IN CONFORMANCE WITH TPI; OR FABRICATING, HANDLING, SHIPPING, INSTALLING & BRACING OF TRUSSES. DESIGN CONFORMS WITH APPLICABLE PROVISIONS OF NDS (NATIONAL DESIGN SPEC, BY AF&PA) AND TPI. ALPINE CONNECTOR PLATES ARE MADE OF 20/18/16GA (W,H/S/K) ASTM A653 GRADE 40/60 (W, K/H,S) GALV. STEEL. APPLY PLATES TO EACH FACE OF TRUSS AND, UNLESS OTHERWISE LOCATED ON THIS DESIGN, POSITION PER DRAWINGS 160A-Z. ANY INSPECTION OF PLATES FOLLOWED BY (1) SHALL BE PER ANNEX A3 OF TPI1-2002 SEC.3. A SEAL ON THIS DRAWING INDICATES ACCEPTANCE OF PROFESSIONAL ENGINEERING RESPONSIBILITY SOLELY FOR THE TRUSS COMPONENT DESIGN SHOWN. THE SUITABILITY AND USE OF THIS COMPONENT FOR ANY BUILDING IS THE RESPONSIBILITY OF THE BUILDING DESIGNER PER ANSI/TPI 1 SEC. 2.

MANUEL MARTINEZ
CERTIFICATE
No. 47182
STATE OF FLORIDA
PROFESSIONAL ENGINEER
Feb 25, 04

TC LL	30.0 PSF	REF R487-- 84277
★TC DL	7.0 PSF	DATE 02/25/04
BC DL	10.0 PSF	DRW HCUSR487 04056100
BC LL	0.0 PSF	HC-ENG JB/MMA
TOT.LD.	47.0 PSF	SEQN- 44355
DUR.FAC.	1.33	FROM JP
SPACING	24.0"	JREF- 1SAP487_Z04

(080-SIMOUE HOMES / LOT 83 CALLOWAY - H21A1)

Top chord 2x4 SP #2 Dense
Bot chord 2x4 SP #2 Dense
Webs 2x4 SP #3

(A) Continuous lateral bracing equally spaced on member.

110 mph wind, 14.54 ft mean hgt, ASCE 7-98, CLOSED bldg, not located within 6.50 ft from roof edge, CAT II, EXP B, wind TC DL=5.0 psf, wind BC DL=5.0 psf.

Deflection meets L/240 live and L/180 total load.

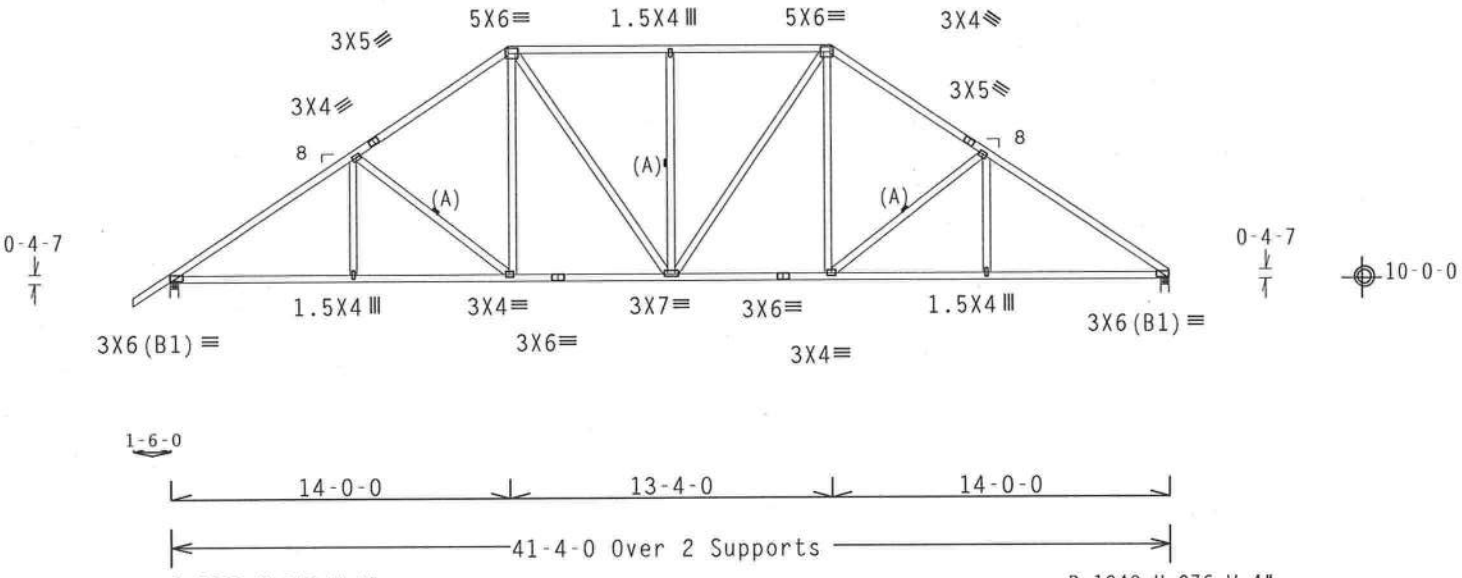

PLT TYP. Wave TPI | Design Crit: TPI-1995(STD) | 6.10 | QTY:2 | FL/-/4/-/-/R/- | Scale =.125"/Ft.

WARNING TRUSSES REQUIRE EXTREME CARE IN FABRICATION, HANDLING, SHIPPING, INSTALLING AND BRACING. REFER TO BCSI 1-03 (BUILDING COMPONENT SAFETY INFORMATION), PUBLISHED BY TPI (TRUSS PLATE INSTITUTE, 583 D'ONOFRIO DR., SUITE 200, MADISON, WI 53719) AND WTCA (WOOD TRUSS COUNCIL OF AMERICA, 6300 ENTERPRISE LN, MADISON, WI 53719) FOR SAFETY PRACTICES PRIOR TO PERFORMING THESE FUNCTIONS. UNLESS OTHERWISE INDICATED, TOP CHORD SHALL HAVE PROPERLY ATTACHED STRUCTURAL PANELS AND BOTTOM CHORD SHALL HAVE A PROPERLY ATTACHED RIGID CEILING.

IMPORTANT FURNISH A COPY OF THIS DESIGN TO THE INSTALLATION CONTRACTOR. ALPINE ENGINEERED PRODUCTS, INC. SHALL NOT BE RESPONSIBLE FOR ANY DEVIATION FROM THIS DESIGN; ANY FAILURE TO BUILD THE TRUSS IN CONFORMANCE WITH TPI; OR FABRICATING, HANDLING, SHIPPING, INSTALLING & BRACING OF TRUSSES. DESIGN CONFORMS WITH APPLICABLE PROVISIONS OF NDS (NATIONAL DESIGN SPEC, BY AF&PA) AND TPI. ALPINE CONNECTOR PLATES ARE MADE OF 20/18/16GA (W,H/S/K) ASTM A653 GRADE 40/60 (W, K/H,S) GALV. STEEL. APPLY PLATES TO EACH FACE OF TRUSS AND, UNLESS OTHERWISE LOCATED ON THIS DESIGN, POSITION PER DRAWINGS 160A-Z. ANY INSPECTION OF PLATES FOLLOWED BY (I) SHALL BE PER ANNEX A3 OF TPI1-2002 SEC.3. A SEAL ON THIS DRAWING INDICATES ACCEPTANCE OF PROFESSIONAL ENGINEERING RESPONSIBILITY SOLELY FOR THE TRUSS COMPONENT DESIGN SHOWN. THE SUITABILITY AND USE OF THIS COMPONENT FOR ANY BUILDING IS THE RESPONSIBILITY OF THE BUILDING DESIGNER PER ANSI/TPI 1 SEC. 2.

ALPINE
Alpine Engineered Products, Inc.
1950 Marley Drive
Haines City, FL 33844
FL Certificate of Authorization # 567

MANUEL MARTINEZ CERTIFICATE No. 47182 STATE OF FLORIDA PROFESSIONAL ENGINEER
Feb 25, 2004

TC LL	30.0 PSF	REF R487-- 84278
TC DL	7.0 PSF	DATE 02/25/04
BC DL	10.0 PSF	DRW HCUSR487 04056090
BC LL	0.0 PSF	HC-ENG JB/MMA *
TOT.LD.	47.0 PSF	SEQN- 23342
DUR.FAC.	1.33	FROM JP
SPACING	24.0"	JREF- 1SAP487_Z04

(080-SIMQUE HOMES / LOT 83 CALLOWAY - A)

Top chord 2x4 SP #2 Dense
Bot chord 2x4 SP #2 Dense
Webs 2x4 SP #3

(A) Continuous lateral bracing equally spaced on member.

110 mph wind, 14.54 ft mean hgt, ASCE 7-98, CLOSED bldg, not located within 6.50 ft from roof edge, CAT II, EXP B, wind TC DL=5.0 psf, wind BC DL=5.0 psf.

Deflection meets L/240 live and L/180 total load.

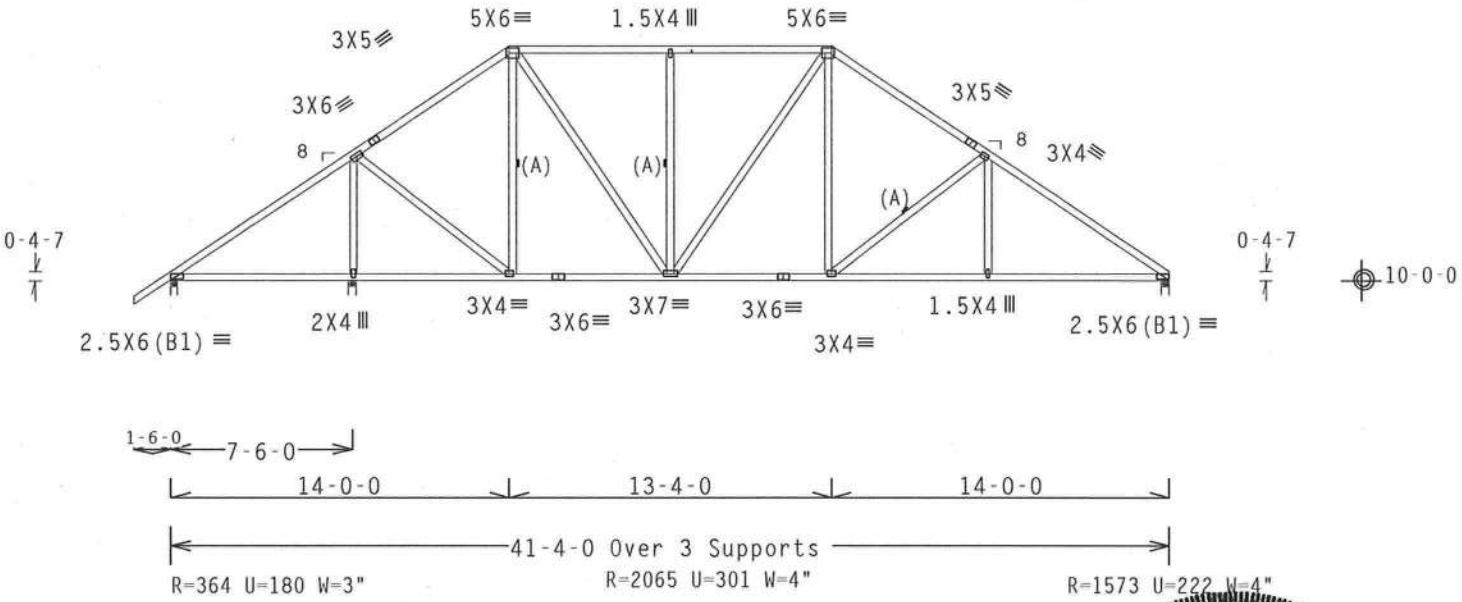

PLT TYP. Wave TPI | Design Crit: TPI-1995(STD) | 6.10 | CTL:2 | FL/-/4/-/-/R/- | Scale =.125"/Ft.

Alpine Engineered Products, Inc.
1950 Marley Drive
Haines City, FL 33844
FL Certificate of Authorization # 567

WARNING TRUSSES REQUIRE EXTREME CARE IN FABRICATION, HANDLING, SHIPPING, INSTALLING AND BRACING. REFER TO BCSI 1-03 (BUILDING COMPONENT SAFETY INFORMATION), PUBLISHED BY TPI (TRUSS PLATE INSTITUTE, 583 D'ONOFRIO DR., SUITE 200, MADISON, WI 53719) AND WTCA (WOOD TRUSS COUNCIL OF AMERICA, 6300 ENTERPRISE LN, MADISON, WI 53719) FOR SAFETY PRACTICES PRIOR TO PERFORMING THESE FUNCTIONS. UNLESS OTHERWISE INDICATED, TOP CHORD SHALL HAVE PROPERLY ATTACHED STRUCTURAL PANELS AND BOTTOM CHORD SHALL HAVE A PROPERLY ATTACHED RIGID CEILING.

IMPORTANT FURNISH A COPY OF THIS DESIGN TO THE INSTALLATION CONTRACTOR. ALPINE ENGINEERED PRODUCTS, INC. SHALL NOT BE RESPONSIBLE FOR ANY DEVIATION FROM THIS DESIGN; ANY FAILURE TO BUILD THE TRUSS IN CONFORMANCE WITH TPI; OR FABRICATING, HANDLING, SHIPPING, INSTALLING & BRACING OF TRUSSES. DESIGN CONFORMS WITH APPLICABLE PROVISIONS OF NDS (NATIONAL DESIGN SPEC. BY AF&PA) AND TPI. ALPINE CONNECTOR PLATES ARE MADE OF 20/18/16GA (W,H/S/K) ASTM A653 GRADE 40/60 (W, K/H,S) GALV. STEEL. APPLY PLATES TO EACH FACE OF TRUSS AND, UNLESS OTHERWISE LOCATED ON THIS DESIGN, POSITION PER DRAWINGS 160A-Z. ANY INSPECTION OF PLATES FOLLOWED BY (1) SHALL BE PER ANNEX A3 OF TPI1-2002 SEC.3. A SEAL ON THIS DRAWING INDICATES ACCEPTANCE OF PROFESSIONAL ENGINEERING RESPONSIBILITY SOLELY FOR THE TRUSS COMPONENT DESIGN SHOWN. THE SUITABILITY AND USE OF THIS COMPONENT FOR ANY BUILDING IS THE RESPONSIBILITY OF THE BUILDING DESIGNER PER ANSI/TPI 1 SEC. 2.

MANUEL MARTINEZ
CERTIFICATE
No. 47182
STATE OF FLORIDA
PROFESSIONAL ENGINEER
Feb 25, 2004

TC LL	30.0 PSF	REF R487-- 84279
TC DL	7.0 PSF	DATE 02/25/04
BC DL	10.0 PSF	DRW HCUSR487 04056101
BC LL	0.0 PSF	HC-ENG JB/MMA
TOT.LD.	47.0 PSF	SEQN- 23332
DUR.FAC.	1.33	FROM JP
SPACING	24.0"	JREF- 1SAP487_Z04

Top chord 2x4 SP #2 Dense
Bot chord 2x4 SP #2 Dense
Webs 2x4 SP #3

(A) Continuous lateral bracing equally spaced on member.

Deflection meets L/240 live and L/180 total load.

110 mph wind, 14.54 ft mean hgt, ASCE 7-98, CLOSED bldg, not located within 6.50 ft from roof edge, CAT II, EXP B, wind TC DL=5.0 psf, wind BC DL=5.0 psf.

Right end vertical exposed to wind pressure. Deflection meets L/180 criteria for flexible wall coverings.

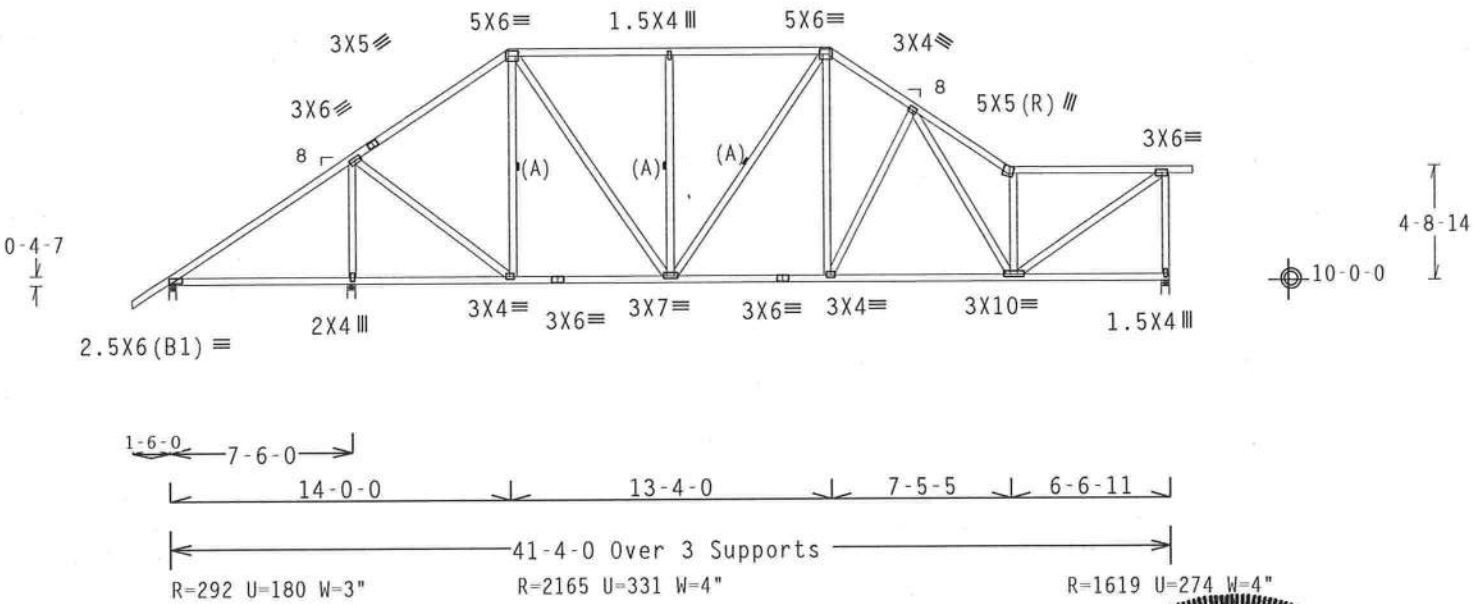

PLT TYP. Wave TPI | Design Crit: TPI-1995(STD) | 6.10 | FL/-/4/-/-/R/- | Scale =.125"/Ft.

ALPINE
Alpine Engineered Products, Inc.
1950 Marley Drive
Haines City, FL 33844
FL Certificate of Authorization # 567

WARNING TRUSSES REQUIRE EXTREME CARE IN FABRICATION, HANDLING, SHIPPING, INSTALLING AND BRACING. REFER TO BCSI 1-03 (BUILDING COMPONENT SAFETY INFORMATION), PUBLISHED BY TPI (TRUSS PLATE INSTITUTE, 583 D'ONOFRIO DR., SUITE 200, MADISON, WI 53719) AND WTCA (WOOD TRUSS COUNCIL OF AMERICA, 6300 ENTERPRISE LN. MADISON, WI 53719) FOR SAFETY PRACTICES PRIOR TO PERFORMING THESE FUNCTIONS. UNLESS OTHERWISE INDICATED, TOP CHORD SHALL HAVE PROPERLY ATTACHED STRUCTURAL PANELS AND BOTTOM CHORD SHALL HAVE A PROPERLY ATTACHED RIGID CEILING.

IMPORTANT FURNISH A COPY OF THIS DESIGN TO THE INSTALLATION CONTRACTOR. ALPINE ENGINEERED PRODUCTS, INC. SHALL NOT BE RESPONSIBLE FOR ANY DEVIATION FROM THIS DESIGN; ANY FAILURE TO BUILD THE TRUSS IN CONFORMANCE WITH TPI; OR FABRICATING, HANDLING, SHIPPING, INSTALLING & BRACING OF TRUSSES. DESIGN CONFORMS WITH APPLICABLE PROVISIONS OF NDS (NATIONAL DESIGN SPEC. BY AF&PA) AND TPI. ALPINE CONNECTOR PLATES ARE MADE OF 20/18/16GA (W,H/S/K) ASTM A653 GRADE 40/60 (W, K/H,S) GALV. STEEL. APPLY PLATES TO EACH FACE OF TRUSS AND, UNLESS OTHERWISE LOCATED ON THIS DESIGN, POSITION PER DRAWINGS 160A-Z. ANY INSPECTION OF PLATES FOLLOWED BY (1) SHALL BE PER ANNEX A3 OF TPI1-2002 SEC.3. A SEAL ON THIS DRAWING INDICATES ACCEPTANCE OF PROFESSIONAL ENGINEERING RESPONSIBILITY SOLELY FOR THE TRUSS COMPONENT DESIGN SHOWN. THE SUITABILITY AND USE OF THIS COMPONENT FOR ANY BUILDING IS THE RESPONSIBILITY OF THE BUILDING DESIGNER PER ANSI/TPI 1 SEC. 2.

MANUEL MARTINEZ
CERTIFICATE
No. 47182
STATE OF FLORIDA
PROFESSIONAL ENGINEER

TC LL	30.0 PSF	REF	R487-- 84280
TC DL	7.0 PSF	DATE	02/25/04
BC DL	10.0 PSF	DRW	HCUSR487 04056102
BC LL	0.0 PSF	HC-ENG	JB/MMA
TOT.LD.	47.0 PSF	SEQN-	23328
DUR.FAC.	1.33	FROM	JP
SPACING	24.0"	JREF-	1SAP487_Z04

(080-SIMOUE HOMES / LOT 83 CALLOWAY - A2)

Top chord 2x4 SP #2 Dense
Bot chord 2x4 SP #2 Dense
Webs 2x4 SP #3 :W12 2x4 SP #2 Dense:

(A) Continuous lateral bracing equally spaced on member.

Deflection meets L/240 live and L/180 total load.

110 mph wind, 14.54 ft mean hgt, ASCE 7-98, CLOSED bldg, not located within 6.50 ft from roof edge, CAT II, EXP B, wind TC DL=5.0 psf, wind BC DL=5.0 psf.

Right end vertical exposed to wind pressure. Deflection meets L/180 criteria for flexible wall coverings.

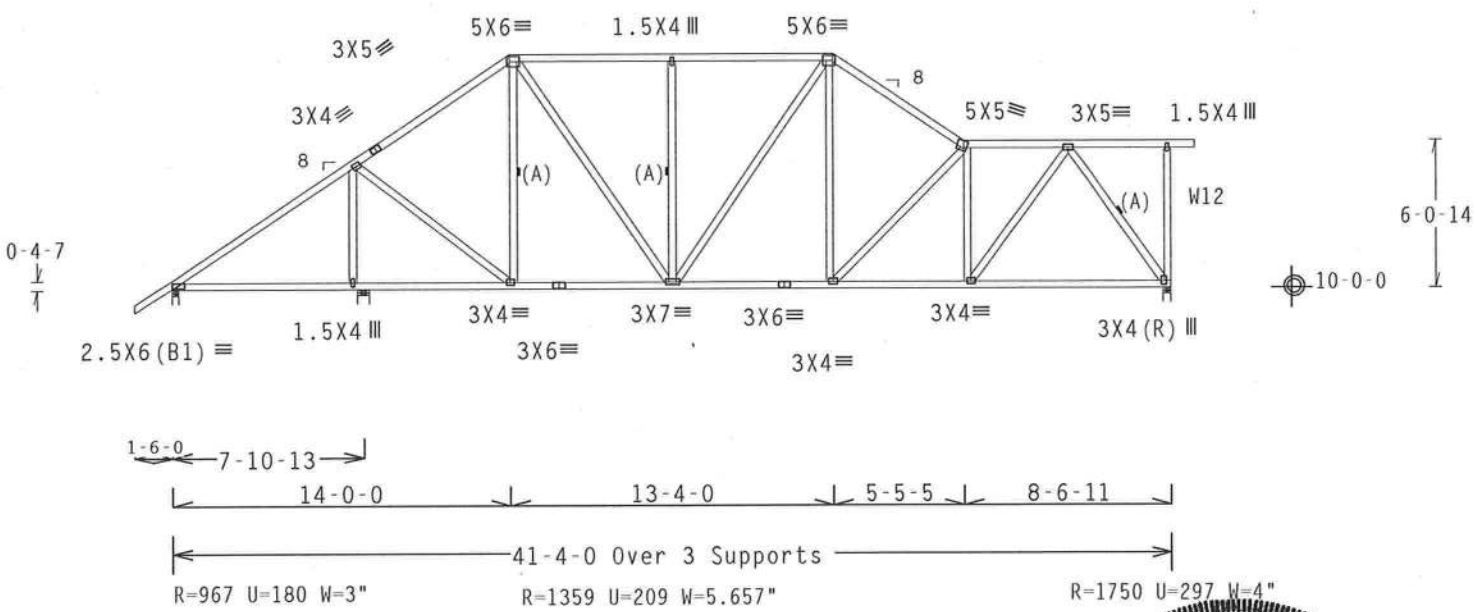

PLT TYP. Wave TPI | Design Crit: TPI-1995(STD) | 6.10 | PLT:1 | FL/-/4/-/-/R/- | Scale =.125"/Ft.

ALPINE

Alpine Engineered Products, Inc.
1950 Marley Drive
Haines City, FL 33844
FL Certificate of Authorization # 567

WARNING TRUSSES REQUIRE EXTREME CARE IN FABRICATION, HANDLING, SHIPPING, INSTALLING AND BRACING. REFER TO BCSI 1-03 (BUILDING COMPONENT SAFETY INFORMATION), PUBLISHED BY TPI (TRUSS PLATE INSTITUTE, 583 D'ONOFRIO DR., SUITE 200, MADISON, WI 53719) AND WTCA (WOOD TRUSS COUNCIL OF AMERICA, 6300 ENTERPRISE LN. MADISON, WI 53719) FOR SAFETY PRACTICES PRIOR TO PERFORMING THESE FUNCTIONS. UNLESS OTHERWISE INDICATED, TOP CHORD SHALL HAVE PROPERLY ATTACHED STRUCTURAL PANELS AND BOTTOM CHORD SHALL HAVE A PROPERLY ATTACHED RIGID CEILING.

IMPORTANT FURNISH A COPY OF THIS DESIGN TO THE INSTALLATION CONTRACTOR. ALPINE ENGINEERED PRODUCTS, INC. SHALL NOT BE RESPONSIBLE FOR ANY DEVIATION FROM THIS DESIGN; ANY FAILURE TO BUILD THE TRUSS IN CONFORMANCE WITH TPI; OR FABRICATING, HANDLING, SHIPPING, INSTALLING & BRACING OF TRUSSES. DESIGN CONFORMS WITH APPLICABLE PROVISIONS OF NDS (NATIONAL DESIGN SPEC. BY AF&PA) AND TPI. ALPINE CONNECTOR PLATES ARE MADE OF 20/18/16GA (W,H/S/K) ASTM A653 GRADE 40/60 (W, K/H,S) GALV. STEEL. APPLY PLATES TO EACH FACE OF TRUSS AND, UNLESS OTHERWISE LOCATED ON THIS DESIGN, POSITION PER DRAWINGS 160A-Z. ANY INSPECTION OF PLATES FOLLOWED BY (1) SHALL BE PER ANNEX A3 OF TPI1-2002 SEC.3. A SEAL ON THIS DRAWING INDICATES ACCEPTANCE OF PROFESSIONAL ENGINEERING RESPONSIBILITY SOLELY FOR THE TRUSS COMPONENT DESIGN SHOWN. THE SUITABILITY AND USE OF THIS COMPONENT FOR ANY BUILDING IS THE RESPONSIBILITY OF THE BUILDING DESIGNER PER ANSI/TPI 1 SEC. 2.

MANUEL MARTINEZ
CERTIFICATE
No. 47182
STATE OF FLORIDA
PROFESSIONAL ENGINEER
Feb 26, 2004

TC LL	30.0 PSF	REF	R487-- 84281
TC DL	7.0 PSF	DATE	02/25/04
BC DL	10.0 PSF	DRW	HCUSR487 04056103
BC LL	0.0 PSF	HC-ENG	JB/MMA
TOT.LD.	47.0 PSF	SEQN-	23324
DUR.FAC.	1.33	FROM	JP
SPACING	24.0"	JREF-	1SAP487_Z04

(080-SIMQUE HOMES / LOT 83 CALLOWAY - A4)

Top chord 2x4 SP #2 Dense
Bot chord 2x4 SP #2 Dense
Webs 2x4 SP #3 :W16 2x4 SP #2 Dense:

(A) Continuous lateral bracing equally spaced on member.

Deflection meets L/240 live and L/180 total load.

110 mph wind, 14.54 ft mean hgt, ASCE 7-98, CLOSED bldg, not located within 6.50 ft from roof edge, CAT II, EXP B, wind TC DL=5.0 psf, wind BC DL=5.0 psf.

Right end vertical exposed to wind pressure. Deflection meets L/180 criteria for flexible wall coverings.

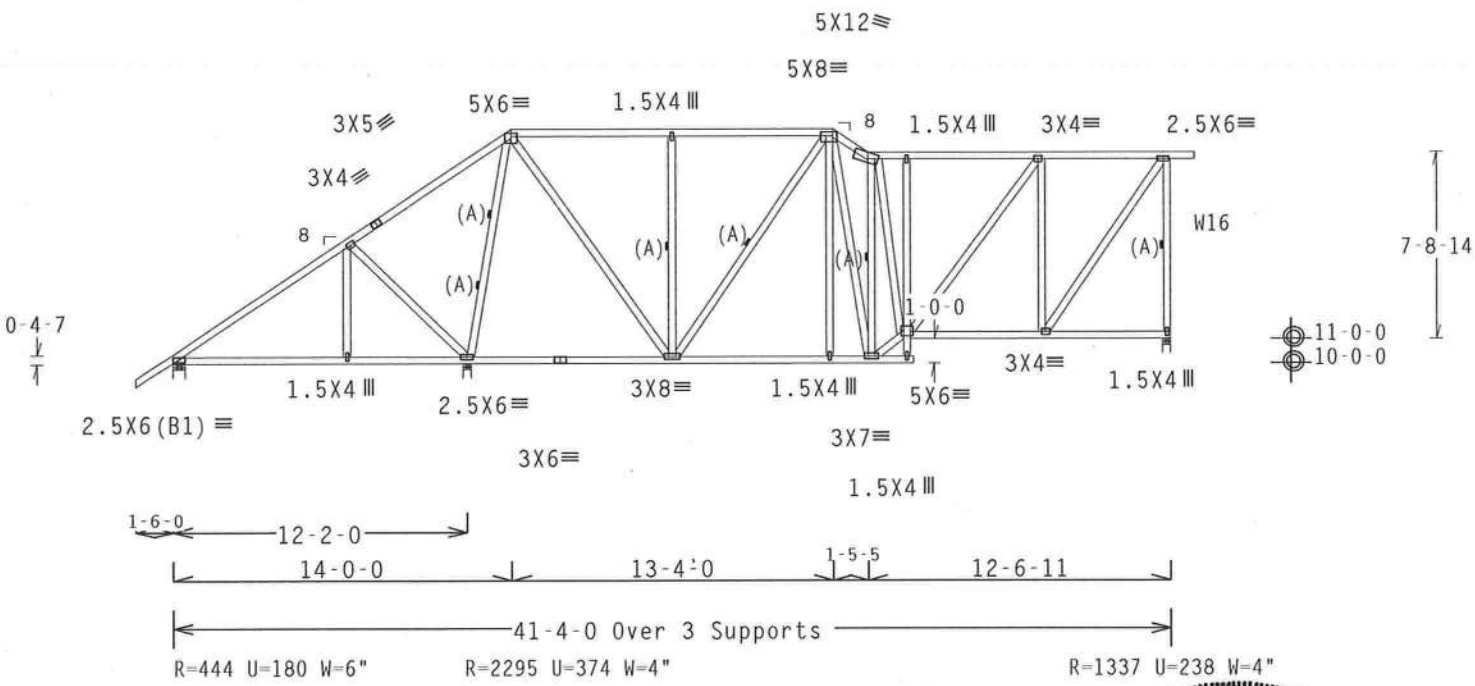

PLT TYP. Wave TPI | Design Crit: TPI-1995(STD) | 6.10 | PTR.1 | FL/-/4/-/-/R/- | Scale =.125"/Ft.

ALPINE

Alpine Engineered Products, Inc.
1950 Marley Drive
Haines City, FL 33844
FL Certificate of Authorization # 567

WARNING TRUSSES REQUIRE EXTREME CARE IN FABRICATION, HANDLING, SHIPPING, INSTALLING AND BRACING. REFER TO BCSI 1-03 (BUILDING COMPONENT SAFETY INFORMATION), PUBLISHED BY TPI (TRUSS PLATE INSTITUTE, 583 D'ONOFRIO DR., SUITE 200, MADISON, WI 53719) AND WTCA (WOOD TRUSS COUNCIL OF AMERICA, 6300 ENTERPRISE LN, MADISON, WI 53719) FOR SAFETY PRACTICES PRIOR TO PERFORMING THESE FUNCTIONS. UNLESS OTHERWISE INDICATED, TOP CHORD SHALL HAVE PROPERLY ATTACHED STRUCTURAL PANELS AND BOTTOM CHORD SHALL HAVE A PROPERLY ATTACHED RIGID CEILING.

IMPORTANT FURNISH A COPY OF THIS DESIGN TO THE INSTALLATION CONTRACTOR. ALPINE ENGINEERED PRODUCTS, INC. SHALL NOT BE RESPONSIBLE FOR ANY DEVIATION FROM THIS DESIGN; ANY FAILURE TO BUILD THE TRUSS IN CONFORMANCE WITH TPI; OR FABRICATING, HANDLING, SHIPPING, INSTALLING & BRACING OF TRUSSES. DESIGN CONFORMS WITH APPLICABLE PROVISIONS OF NDS (NATIONAL DESIGN SPEC. BY AF&PA) AND TPI. ALPINE CONNECTOR PLATES ARE MADE OF 20/18/16GA (W,H/S/K) ASTM A653 GRADE 40/60 (W, K/H,S) GALV. STEEL. APPLY PLATES TO EACH FACE OF TRUSS AND, UNLESS OTHERWISE LOCATED ON THIS DESIGN, POSITION PER DRAWINGS 160A-Z. ANY INSPECTION OF PLATES FOLLOWED BY (I) SHALL BE PER ANNEX A3 OF TPI1-2002 SEC.3. A SEAL ON THIS DRAWING INDICATES ACCEPTANCE OF PROFESSIONAL ENGINEERING RESPONSIBILITY SOLELY FOR THE TRUSS COMPONENT DESIGN SHOWN. THE SUITABILITY AND USE OF THIS COMPONENT FOR ANY BUILDING IS THE RESPONSIBILITY OF THE BUILDING DESIGNER PER ANSI/TPI 1 SEC. 2.

MANUEL MARTINEZ
CERTIFICATE
No. 47182
STATE OF FLORIDA
PROFESSIONAL ENGINEER
2-25-04

TC LL	30.0 PSF	REF	R487-- 84282
TC DL	7.0 PSF	DATE	02/25/04
BC DL	10.0 PSF	DRW	HCUSR487 04056104
BC LL	0.0 PSF	HC-ENG	JB/MMA
TOT.LD.	47.0 PSF	SEQN-	44549
DUR.FAC.	1.33	FROM	JP
SPACING	24.0"	JREF-	1SAP487_Z04

Top chord 2x4 SP #2 Dense
Bot chord 2x4 SP #2 Dense
Webs 2x4 SP #3
:Rt Bearing Leg 2x6 SP #2:

Deflection meets L/240 live and L/180 total load.

110 mph wind, 14.54 ft mean hgt, ASCE 7-98, CLOSED bldg, not located within 6.50 ft from roof edge, CAT II, EXP B, wind TC DL=5.0 psf, wind BC DL=5.0 psf.

(A) Continuous lateral bracing equally spaced on member.

Right end vertical not exposed to wind pressure.

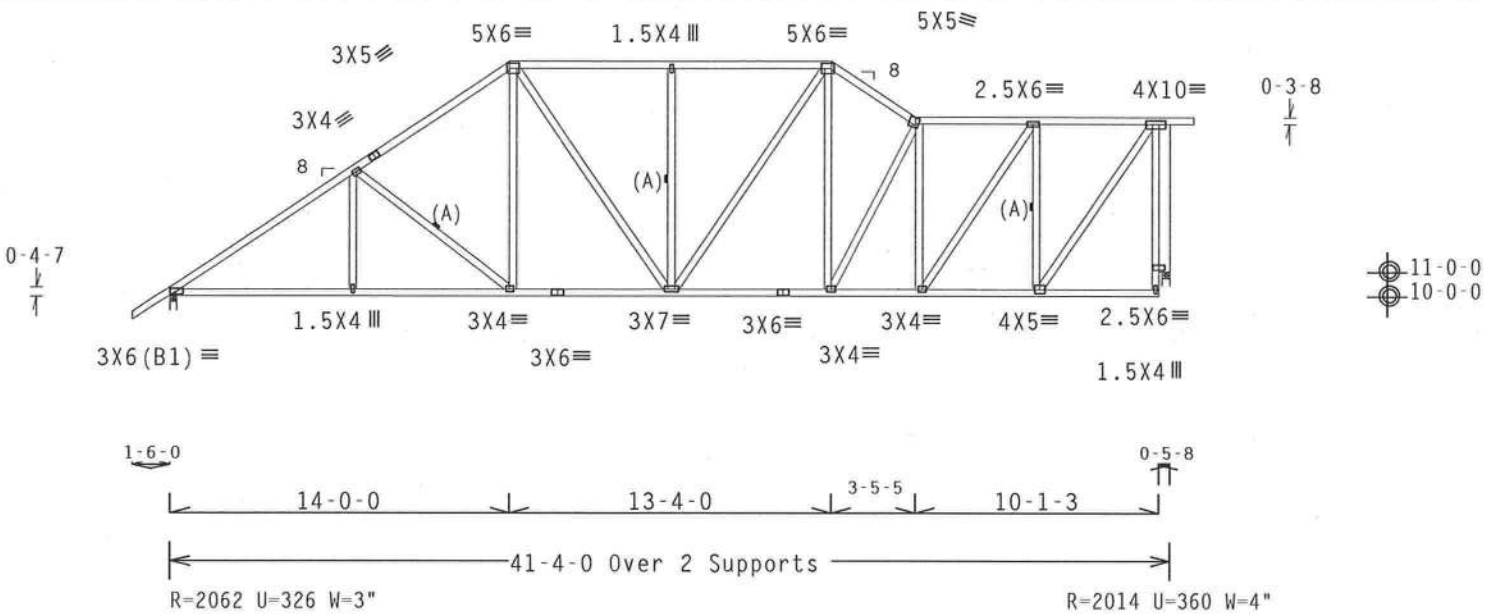

PLT TYP. Wave TPI | Design Crit: TPI-1995(STD) | 6.10 | 01.1 | FL/-/4/-/-/R/- | Scale =.125"/Ft.

ALPINE

Alpine Engineered Products, Inc.
1950 Marley Drive
Haines City, FL 33844
FL Certificate of Authorization # 567

WARNING TRUSSES REQUIRE EXTREME CARE IN FABRICATION, HANDLING, SHIPPING, INSTALLING AND BRACING. REFER TO BCSI 1-03 (BUILDING COMPONENT SAFETY INFORMATION), PUBLISHED BY TPI (TRUSS PLATE INSTITUTE, 583 D'ONOFRIO DR., SUITE 200, MADISON, WI 53719) AND WTCA (WOOD TRUSS COUNCIL OF AMERICA, 6300 ENTERPRISE LN, MADISON, WI 53719) FOR SAFETY PRACTICES PRIOR TO PERFORMING THESE FUNCTIONS. UNLESS OTHERWISE INDICATED, TOP CHORD SHALL HAVE PROPERLY ATTACHED STRUCTURAL PANELS AND BOTTOM CHORD SHALL HAVE A PROPERLY ATTACHED RIGID CEILING.

IMPORTANT FURNISH A COPY OF THIS DESIGN TO THE INSTALLATION CONTRACTOR. ALPINE ENGINEERED PRODUCTS, INC. SHALL NOT BE RESPONSIBLE FOR ANY DEVIATION FROM THIS DESIGN; ANY FAILURE TO BUILD THE TRUSS IN CONFORMANCE WITH TPI; OR FABRICATING, HANDLING, SHIPPING, INSTALLING & BRACING OF TRUSSES. DESIGN CONFORMS WITH APPLICABLE PROVISIONS OF NDS (NATIONAL DESIGN SPEC. BY AF&PA) AND TPI. ALPINE CONNECTOR PLATES ARE MADE OF 20/18/16GA (W,H/S/K) ASTM A653 GRADE 40/60 (W, K/H,S) GALV. STEEL. APPLY PLATES TO EACH FACE OF TRUSS AND, UNLESS OTHERWISE LOCATED ON THIS DESIGN, POSITION PER DRAWINGS 160A-Z. ANY INSPECTION OF PLATES FOLLOWED BY (1) SHALL BE PER ANNEX A3 OF TPI1-2002 SEC.3. A SEAL ON THIS DRAWING INDICATES ACCEPTANCE OF PROFESSIONAL ENGINEERING RESPONSIBILITY SOLELY FOR THE TRUSS COMPONENT DESIGN SHOWN. THE SUITABILITY AND USE OF THIS COMPONENT FOR ANY BUILDING IS THE RESPONSIBILITY OF THE BUILDING DESIGNER PER ANSI/TPI 1 SEC. 2.

MANUEL MARTINEZ
CERTIFICATE
No. 47182
STATE OF FLORIDA
PROFESSIONAL ENGINEER

TC LL	30.0 PSF	REF R487-- 84283
TC DL	7.0 PSF	DATE 02/25/04
BC DL	10.0 PSF	DRW HCUSR487 04056105
BC LL	0.0 PSF	HC-ENG JB/MMA
TOT.LD.	47.0 PSF	SEQN- 23320
DUR.FAC.	1.33	FROM JP
SPACING	24.0"	JREF- 1SAP487_Z04

(080-SIMQUE HOMES / LOT 83 CALLOWAY - A5)

Top chord 2x4 SP #2 Dense
Bot chord 2x4 SP #2 Dense
Webs 2x4 SP #3 :W15 2x4 SP #2 Dense:

(A) Continuous lateral bracing equally spaced on member.

Deflection meets L/240 live and L/180 total load.

110 mph wind, 14.54 ft mean hgt, ASCE 7-98, CLOSED bldg, not located within 6.50 ft from roof edge, CAT II, EXP B, wind TC DL=5.0 psf, wind BC DL=5.0 psf.

Right end vertical exposed to wind pressure. Deflection meets L/180 criteria for flexible wall coverings.

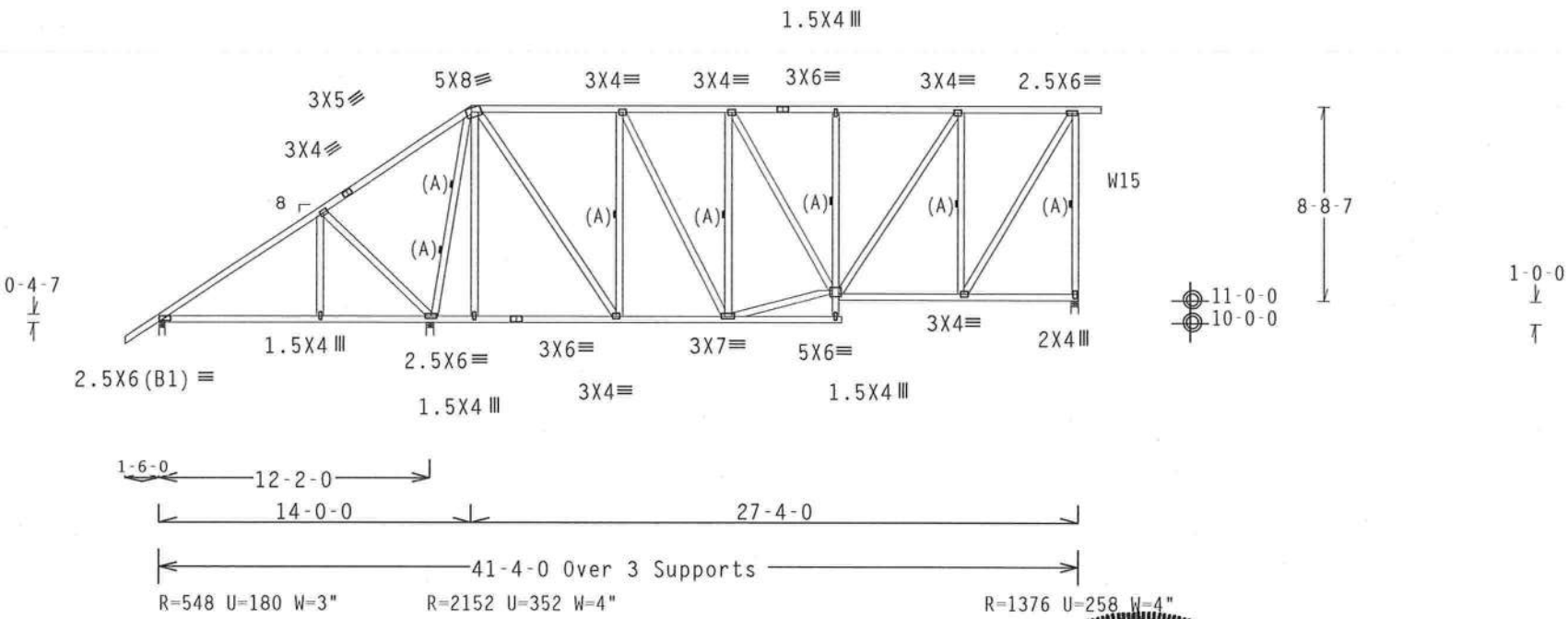

PLT TYP. Wave TPI | Design Crit: TPI-1995(STD) | 6.10 | 11.1 | FL/-/4/-/-/R/- | Scale =.125"/Ft.

ALPINE
Alpine Engineered Products, Inc.
1950 Marley Drive
Haines City, FL 33844
FL Certificate of Authorization # 567

WARNING TRUSSES REQUIRE EXTREME CARE IN FABRICATION, HANDLING, SHIPPING, INSTALLING AND BRACING. REFER TO BCSI 1-03 (BUILDING COMPONENT SAFETY INFORMATION), PUBLISHED BY TPI (TRUSS PLATE INSTITUTE, 583 D'ONOFRIO DR., SUITE 200, MADISON, WI 53719) AND WTCA (WOOD TRUSS COUNCIL OF AMERICA, 6300 ENTERPRISE LN, MADISON, WI 53719) FOR SAFETY PRACTICES PRIOR TO PERFORMING THESE FUNCTIONS. UNLESS OTHERWISE INDICATED, TOP CHORD SHALL HAVE PROPERLY ATTACHED STRUCTURAL PANELS AND BOTTOM CHORD SHALL HAVE A PROPERLY ATTACHED RIGID CEILING.

IMPORTANT FURNISH A COPY OF THIS DESIGN TO THE INSTALLATION CONTRACTOR. ALPINE ENGINEERED PRODUCTS, INC. SHALL NOT BE RESPONSIBLE FOR ANY DEVIATION FROM THIS DESIGN; ANY FAILURE TO BUILD THE TRUSS IN CONFORMANCE WITH TPI; OR FABRICATING, HANDLING, SHIPPING, INSTALLING & BRACING OF TRUSSES. DESIGN CONFORMS WITH APPLICABLE PROVISIONS OF NDS (NATIONAL DESIGN SPEC, BY AF&PA) AND TPI. ALPINE CONNECTOR PLATES ARE MADE OF 20/18/16GA (W.H/S/K) ASTM A653 GRADE 40/60 (W. K/H.S) GALV. STEEL. APPLY PLATES TO EACH FACE OF TRUSS AND, UNLESS OTHERWISE LOCATED ON THIS DESIGN, POSITION PER DRAWINGS 160A-Z. ANY INSPECTION OF PLATES FOLLOWED BY (1) SHALL BE PER ANNEX A3 OF TPI1-2002 SEC.3. A SEAL ON THIS DRAWING INDICATES ACCEPTANCE OF PROFESSIONAL ENGINEERING RESPONSIBILITY SOLELY FOR THE TRUSS COMPONENT DESIGN SHOWN. THE SUITABILITY AND USE OF THIS COMPONENT FOR ANY BUILDING IS THE RESPONSIBILITY OF THE BUILDING DESIGNER PER ANSI/TPI 1 SEC. 2.

MANUEL MARTINEZ
CERTIFICATE No. 47182
STATE OF FLORIDA
PROFESSIONAL ENGINEER
Feb 05 '04

TC	LL	30.0 PSF	REF R487-- 84284
★TC	DL	7.0 PSF	DATE 02/25/04
BC	DL	10.0 PSF	DRW HCUSR487 04056106
BC	LL	0.0 PSF	HC-ENG JB/MMA
TOT.LD.		47.0 PSF	SEQN- 44557
DUR.FAC.		1.33	FROM JP
SPACING		24.0"	JREF- 1SAP487_Z04

THIS DWG PREPARED FROM COMPUTER INPUT (LOADS & DIMENSIONS) SUBMITTED BY TRUSS MFR.

Top chord 2x4 SP #2 Dense
Bot chord 2x4 SP #2 Dense
Webs 2x4 SP #3 :W17 2x4 SP #2 Dense:

(A) Continuous lateral bracing equally spaced on member.

Deflection meets L/240 live and L/180 total load.

110 mph wind, 14.54 ft mean hgt, ASCE 7-98, CLOSED bldg, not located within 6.50 ft from roof edge, CAT II, EXP B, wind TC DL=5.0 psf, wind BC DL=5.0 psf.

Right end vertical exposed to wind pressure. Deflection meets L/180 criteria for flexible wall coverings.

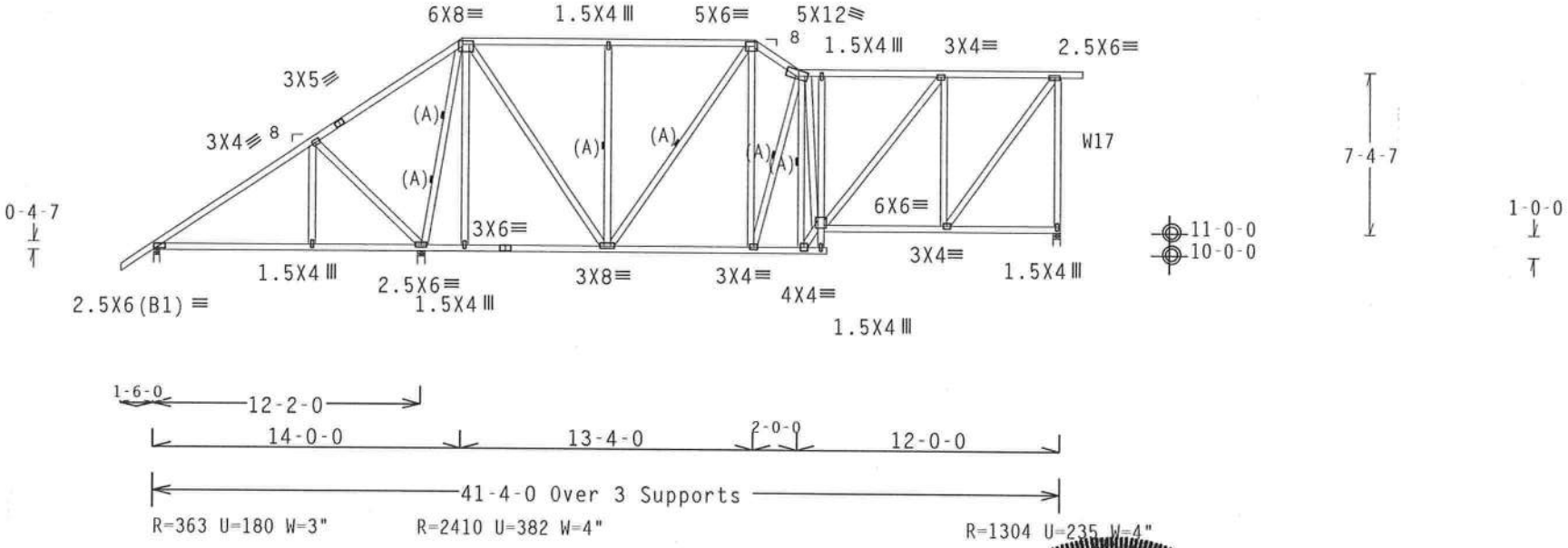

PLT TYP. Wave TPI | Design Crit: TPI-1995(STD) | 6.10 | 1:1 | FL/-/4/-/-/R/- | Scale =.125"/Ft.

ALPINE
Alpine Engineered Products, Inc.
1950 Marley Drive
Haines City, FL 33844
FL Certificate of Authorization # 567

WARNING TRUSSES REQUIRE EXTREME CARE IN FABRICATION, HANDLING, SHIPPING, INSTALLING AND BRACING. REFER TO BCSI 1-03 (BUILDING COMPONENT SAFETY INFORMATION), PUBLISHED BY TPI (TRUSS PLATE INSTITUTE, 583 D'ONOFRIO DR., SUITE 200, MADISON, WI 53719) AND WTCA (WOOD TRUSS COUNCIL OF AMERICA, 6300 ENTERPRISE LN, MADISON, WI 53719) FOR SAFETY PRACTICES PRIOR TO PERFORMING THESE FUNCTIONS. UNLESS OTHERWISE INDICATED, TOP CHORD SHALL HAVE PROPERLY ATTACHED STRUCTURAL PANELS AND BOTTOM CHORD SHALL HAVE A PROPERLY ATTACHED RIGID CEILING.

IMPORTANT FURNISH A COPY OF THIS DESIGN TO THE INSTALLATION CONTRACTOR. ALPINE ENGINEERED PRODUCTS, INC. SHALL NOT BE RESPONSIBLE FOR ANY DEVIATION FROM THIS DESIGN; ANY FAILURE TO BUILD THE TRUSS IN CONFORMANCE WITH TPI; OR FABRICATING, HANDLING, SHIPPING, INSTALLING & BRACING OF TRUSSES. DESIGN CONFORMS WITH APPLICABLE PROVISIONS OF NDS (NATIONAL DESIGN SPEC, BY AF&PA) AND TPI. ALPINE CONNECTOR PLATES ARE MADE OF 20/18/16GA (W,H/S/K) ASTM A653 GRADE 40/60 (W, K/H,S) GALV. STEEL. APPLY PLATES TO EACH FACE OF TRUSS AND, UNLESS OTHERWISE LOCATED ON THIS DESIGN, POSITION PER DRAWINGS 160A-2. ANY INSPECTION OF PLATES FOLLOWED BY (1) SHALL BE PER ANNEX A3 OF TPI1-2002 SEC.3. A SEAL ON THIS DRAWING INDICATES ACCEPTANCE OF PROFESSIONAL ENGINEERING RESPONSIBILITY SOLELY FOR THE TRUSS COMPONENT DESIGN SHOWN. THE SUITABILITY AND USE OF THIS COMPONENT FOR ANY BUILDING IS THE RESPONSIBILITY OF THE BUILDING DESIGNER PER ANSI/TPI 1 SEC. 2.

MANUEL MARTINEZ CERTIFICATE No. 47182 STATE OF FLORIDA PROFESSIONAL ENGINEER
Feb 25, 2004

TC LL	30.0 PSF	REF R487-- 84285
TC DL	7.0 PSF	DATE 02/25/04
BC DL	10.0 PSF	DRW HCUSR487 04056107
BC LL	0.0 PSF	HC-ENG JB/MMA
TOT.LD.	47.0 PSF	SEQN- 44543
DUR.FAC.	1.33	FROM JP
SPACING	24.0"	JREF- 1SAP487_Z04

THIS DWG PREPARED FROM COMPUTER INPUT (LOADS & DIMENSIONS) SUBMITTED BY TRUSS MFR.

Top chord 2x4 SP #2 Dense
Bot chord 2x4 SP #2 Dense
Webs 2x4 SP #3 :W14 2x4 SP #2 Dense:

(A) Continuous lateral bracing equally spaced on member.

Deflection meets L/240 live and L/180 total load.

110 mph wind, 14.54 ft mean hgt, ASCE 7-98, CLOSED bldg, not located within 6.50 ft from roof edge, CAT II, EXP B, wind TC DL=5.0 psf, wind BC DL=5.0 psf.

Right end vertical exposed to wind pressure. Deflection meets L/180 criteria for flexible wall coverings.

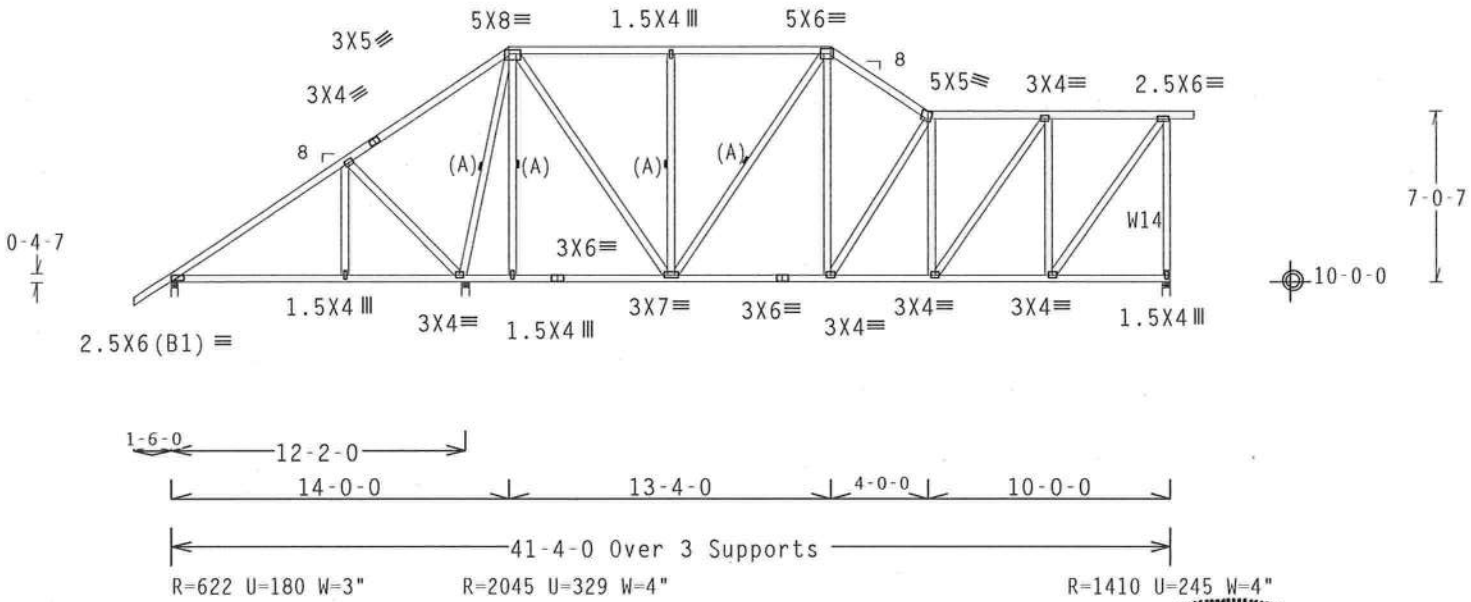

PLT TYP. Wave TPI | Design Crit: TPI-1995(STD) | 6.10 | UL:1 | FL/-/4/-/-/R/- | Scale =.125"/Ft.

ALPINE
Alpine Engineered Products, Inc.
1950 Marley Drive
Haines City, FL 33844
FL Certificate of Authorization # 567

WARNING TRUSSES REQUIRE EXTREME CARE IN FABRICATION, HANDLING, SHIPPING, INSTALLING AND BRACING. REFER TO BCSI 1-03 (BUILDING COMPONENT SAFETY INFORMATION), PUBLISHED BY TPI (TRUSS PLATE INSTITUTE, 583 D'ONOFRIO DR., SUITE 200, MADISON, WI 53719) AND WTCA (WOOD TRUSS COUNCIL OF AMERICA, 6300 ENTERPRISE LN, MADISON, WI 53719) FOR SAFETY PRACTICES PRIOR TO PERFORMING THESE FUNCTIONS. UNLESS OTHERWISE INDICATED, TOP CHORD SHALL HAVE PROPERLY ATTACHED STRUCTURAL PANELS AND BOTTOM CHORD SHALL HAVE A PROPERLY ATTACHED RIGID CEILING.

IMPORTANT FURNISH A COPY OF THIS DESIGN TO THE INSTALLATION CONTRACTOR. ALPINE ENGINEERED PRODUCTS, INC. SHALL NOT BE RESPONSIBLE FOR ANY DEVIATION FROM THIS DESIGN; ANY FAILURE TO BUILD THE TRUSS IN CONFORMANCE WITH TPI; OR FABRICATING, HANDLING, SHIPPING, INSTALLING & BRACING OF TRUSSES. DESIGN CONFORMS WITH APPLICABLE PROVISIONS OF NDS (NATIONAL DESIGN SPEC, BY AF&PA) AND TPI. ALPINE CONNECTOR PLATES ARE MADE OF 20/18/16GA (W,H/S/K) ASTM A653 GRADE 40/60 (W, K/H,S) GALV. STEEL. APPLY PLATES TO EACH FACE OF TRUSS AND, UNLESS OTHERWISE LOCATED ON THIS DESIGN, POSITION PER DRAWINGS 160A-Z. ANY INSPECTION OF PLATES FOLLOWED BY (1) SHALL BE PER ANNEX A3 OF TPI1-2002 SEC.3. A SEAL ON THIS DRAWING INDICATES ACCEPTANCE OF PROFESSIONAL ENGINEERING RESPONSIBILITY SOLELY FOR THE TRUSS COMPONENT DESIGN SHOWN. THE SUITABILITY AND USE OF THIS COMPONENT FOR ANY BUILDING IS THE RESPONSIBILITY OF THE BUILDING DESIGNER PER ANSI/TPI 1 SEC. 2.

MANUEL MARTINEZ
CERTIFICATE
No. 47182
STATE OF FLORIDA
PROFESSIONAL ENGINEER
02-25-04

TC LL	30.0 PSF	REF R487-- 84286
TC DL	7.0 PSF	DATE 02/25/04
BC DL	10.0 PSF	DRW HCUSR487 04056108
BC LL	0.0 PSF	HC-ENG JB/MMA
TOT.LD.	47.0 PSF	SEQN- 44541
DUR.FAC.	1.33	FROM JP
SPACING	24.0"	JREF- 1SAP487_Z04

THIS DWG PREPARED FROM COMPUTER INPUT (LOADS & DIMENSIONS) SUBMITTED BY TRUSS MFR.

Top chord 2x4 SP #2 Dense
Bot chord 2x4 SP #2 Dense
Webs 2x4 SP #3

(A) Continuous lateral bracing equally spaced on member.

Deflection meets L/240 live and L/180 total load. Creep increase factor for dead load is 1.00.

110 mph wind, 14.54 ft mean hgt, ASCE 7-98, CLOSED bldg, not located within 6.50 ft from roof edge, CAT II, EXP B, wind TC DL=5.0 psf, wind BC DL=5.0 psf.

Right end vertical exposed to wind pressure. Deflection meets L/180 criteria for flexible wall coverings.

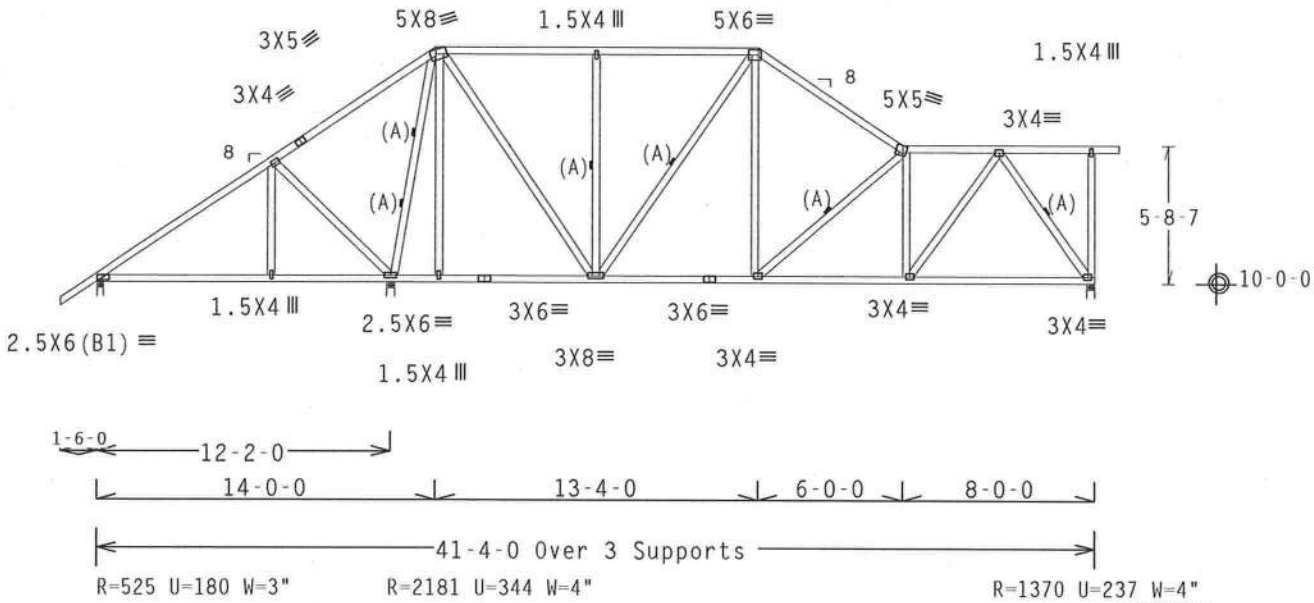

PLT TYP. Wave TPI 95 | Design Crit: TPI-1995 | 6.10 | FL/-/4/-/-/R/- | Scale =.125"/Ft.

ALPINE
Alpine Engineered Products, Inc.
1950 Marley Drive
Haines City, FL 33844
FL Certificate of Authorization # 567

WARNING TRUSSES REQUIRE EXTREME CARE IN FABRICATION, HANDLING, SHIPPING, INSTALLING AND BRACING. REFER TO BCSI 1-03 (BUILDING COMPONENT SAFETY INFORMATION), PUBLISHED BY TPI (TRUSS PLATE INSTITUTE, 583 D'ONOFRIO DR., SUITE 200, MADISON, WI 53719) AND WTCA (WOOD TRUSS COUNCIL OF AMERICA, 6300 ENTERPRISE LN, MADISON, WI 53719) FOR SAFETY PRACTICES PRIOR TO PERFORMING THESE FUNCTIONS. UNLESS OTHERWISE INDICATED, TOP CHORD SHALL HAVE PROPERLY ATTACHED STRUCTURAL PANELS AND BOTTOM CHORD SHALL HAVE A PROPERLY ATTACHED RIGID CEILING.

IMPORTANT FURNISH A COPY OF THIS DESIGN TO THE INSTALLATION CONTRACTOR. ALPINE ENGINEERED PRODUCTS, INC. SHALL NOT BE RESPONSIBLE FOR ANY DEVIATION FROM THIS DESIGN; ANY FAILURE TO BUILD THE TRUSS IN CONFORMANCE WITH TPI; OR FABRICATING, HANDLING, SHIPPING, INSTALLING & BRACING OF TRUSSES. DESIGN CONFORMS WITH APPLICABLE PROVISIONS OF NDS (NATIONAL DESIGN SPEC. BY AF&PA) AND TPI. ALPINE CONNECTOR PLATES ARE MADE OF 20/18/16GA (W,H/S/K) ASTM A653 GRADE 40/60 (W, K/H,S) GALV. STEEL. APPLY PLATES TO EACH FACE OF TRUSS AND, UNLESS OTHERWISE LOCATED ON THIS DESIGN, POSITION PER DRAWINGS 160A-Z. ANY INSPECTION OF PLATES FOLLOWED BY (1) SHALL BE PER ANNEX A3 OF TPI1-2002 SEC.3. A SEAL ON THIS DRAWING INDICATES ACCEPTANCE OF PROFESSIONAL ENGINEERING RESPONSIBILITY SOLELY FOR THE TRUSS COMPONENT DESIGN SHOWN. THE SUITABILITY AND USE OF THIS COMPONENT FOR ANY BUILDING IS THE RESPONSIBILITY OF THE BUILDING DESIGNER PER ANSI/TPI 1 SEC. 2.

MANUEL MARTINEZ CERTIFICATE No. 47182 STATE OF FLORIDA PROFESSIONAL ENGINEER
2-25-04

TC LL	30.0 PSF	REF R487-- 84287
TC DL	7.0 PSF	DATE 02/25/04
BC DL	10.0 PSF	DRW HCUSR487 04056084
BC LL	0.0 PSF	HC-ENG AML /MMA
TOT.LD.	47.0 PSF	SEQN- 54718
DUR.FAC.	1.33	FROM JP
SPACING	24.0"	JREF- 1SAP487_Z04

THIS DWG PREPARED FROM COMPUTER INPUT (LOADS & DIMENSIONS) SUBMITTED BY TRUSS MFR.

Top chord 2x4 SP #2 Dense
Bot chord 2x4 SP #2 Dense
Webs 2x4 SP #3

(A) Continuous lateral bracing equally spaced on member.

Deflection meets L/240 live and L/180 total load. Creep increase factor for dead load is 1.00.

110 mph wind, 15.20 ft mean hgt, ASCE 7-98, CLOSED bldg, not located within 6.50 ft from roof edge, CAT II, EXP B, wind TC DL=5.0 psf, wind BC DL=5.0 psf.

Right end vertical exposed to wind pressure. Deflection meets L/180 criteria for flexible wall coverings.

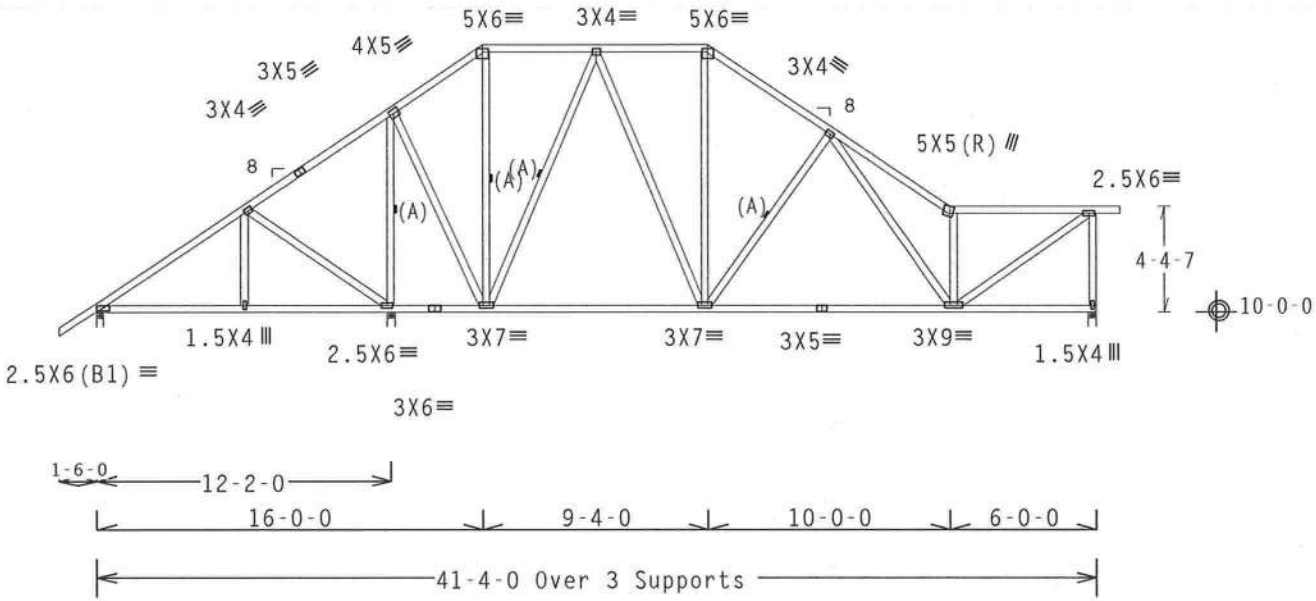

PLT TYP. Wave TPI 95 | Design Crit: TPI-1995 | 6.10 | FL/-/4/-/-/R/- | Scale =.125"/Ft.

ALPINE
Alpine Engineered Products, Inc.
1950 Marley Drive
Haines City, FL 33844
FL Certificate of Authorization # 567

WARNING TRUSSES REQUIRE EXTREME CARE IN FABRICATION, HANDLING, SHIPPING, INSTALLING AND BRACING. REFER TO BCSI 1-03 (BUILDING COMPONENT SAFETY INFORMATION), PUBLISHED BY TPI (TRUSS PLATE INSTITUTE, 583 D'ONOFRIO DR., SUITE 200, MADISON, WI 53719) AND WTCA (WOOD TRUSS COUNCIL OF AMERICA, 6300 ENTERPRISE LN, MADISON, WI 53719) FOR SAFETY PRACTICES PRIOR TO PERFORMING THESE FUNCTIONS. UNLESS OTHERWISE INDICATED, TOP CHORD SHALL HAVE PROPERLY ATTACHED STRUCTURAL PANELS AND BOTTOM CHORD SHALL HAVE A PROPERLY ATTACHED RIGID CEILING.

IMPORTANT FURNISH A COPY OF THIS DESIGN TO THE INSTALLATION CONTRACTOR. ALPINE ENGINEERED PRODUCTS, INC. SHALL NOT BE RESPONSIBLE FOR ANY DEVIATION FROM THIS DESIGN; ANY FAILURE TO BUILD THE TRUSS IN CONFORMANCE WITH TPI; OR FABRICATING, HANDLING, SHIPPING, INSTALLING & BRACING OF TRUSSES. DESIGN CONFORMS WITH APPLICABLE PROVISIONS OF NDS (NATIONAL DESIGN SPEC, BY AF&PA) AND TPI. ALPINE CONNECTOR PLATES ARE MADE OF 20/18/16GA (W,H/S/K) ASTM A653 GRADE 40/60 (W, K/H,S) GALV. STEEL. APPLY PLATES TO EACH FACE OF TRUSS AND, UNLESS OTHERWISE LOCATED ON THIS DESIGN, POSITION PER DRAWINGS 160A-Z. ANY INSPECTION OF PLATES FOLLOWED BY (1) SHALL BE PER ANNEX A3 OF TPI1-2002 SEC.3. A SEAL ON THIS DRAWING INDICATES ACCEPTANCE OF PROFESSIONAL ENGINEERING RESPONSIBILITY SOLELY FOR THE TRUSS COMPONENT DESIGN SHOWN. THE SUITABILITY AND USE OF THIS COMPONENT FOR ANY BUILDING IS THE RESPONSIBILITY OF THE BUILDING DESIGNER PER ANSI/TPI 1 SEC. 2.

MANUEL MARTINEZ
CERTIFICATE
No. 47182
STATE OF FLORIDA
PROFESSIONAL ENGINEER
Feb 5, 2004

TC LL	30.0 PSF	REF	R487-- 84288
★TC DL	7.0 PSF	DATE	02/25/04
BC DL	10.0 PSF	DRW	HCUSR487 04056072
BC LL	0.0 PSF	HC-ENG	AML /MMA
TOT.LD.	47.0 PSF	SEQN-	54715
DUR.FAC.	1.33	FROM	JP
SPACING	24.0"	JREF-	1SAP487_Z04

Top chord 2x4 SP #2 Dense :T2, T3, T4 2x6 SP #2:
Bot chord 2x6 SP #2
Webs 2x4 SP #3

SPECIAL LOADS
------(LUMBER DUR.FAC.=1.33 / PLATE DUR.FAC.=1.33)
TC - From 74 PLF at -1.50 to 74 PLF at 41.33
BC - From 4 PLF at -1.50 to 4 PLF at 0.00
BC - From 20 PLF at 0.00 to 20 PLF at 41.33
TC - 79 LB Conc. Load at 1.94
TC - 211 LB Conc. Load at 3.94
TC - 220 LB Conc. Load at 5.94, 7.94, 9.94, 11.94, 13.94
15.94, 17.94, 19.94, 21.81, 23.69, 25.56, 27.44, 29.31, 31.19
33.06, 34.94, 36.81
TC - 12 LB Conc. Load at 38.69, 40.56
BC - 218 LB Conc. Load at 1.94
BC - 77 LB Conc. Load at 3.94, 5.94, 7.94, 9.94, 11.94
13.94, 15.94, 17.94, 19.94, 21.81, 23.69, 25.56, 27.44, 29.31
31.19, 33.06, 34.94, 36.81
BC - 284 LB Conc. Load at 38.69, 40.56

2 COMPLETE TRUSSES REQUIRED

NAILING SCHEDULE: (12d_common_nails)
TOP CHORD: 1 ROW @ 12" o.c.
BOT CHORD: 1 ROW @ 12" o.c.
WEBS : 1 ROW @ 4" o.c.
USE EQUAL SPACING BETWEEN ROWS AND STAGGER NAILS
IN EACH ROW TO AVOID SPLITTING.

110 mph wind, 15.00 ft mean hgt, ASCE 7-98, CLOSED bldg, Located anywhere in roof, CAT II, EXP B, wind TC DL=5.0 psf, wind BC DL=5.0 psf.

End verticals not exposed to wind pressure.

H = recommended connection based on manufacturer tested capacities and calculations. Conditions may exist that require different connections than indicated. Refer to manufacturer publication for additional information.

Deflection meets L/240 live and L/180 total load.

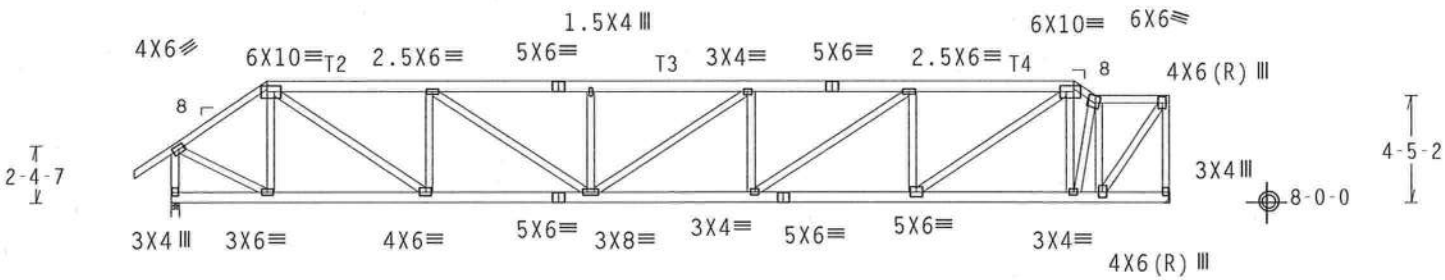

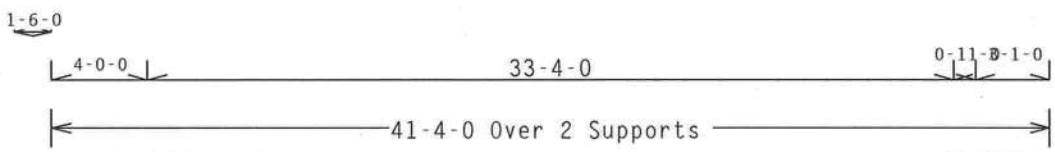

R=5035 U=1797 W=4"

R=5185 U=1895 H-Simpson HGUS26-2
w/ (8) [illegible] x 5" nails in Truss
w/ [illegible] nails in Girder
Gi[illegible]ine

PLT TYP. Wave TPI | Design Crit: TPI-1995(STD) | 6.10 [illegible] FL/-/4/-/-/R/- | Scale =.125"/Ft.

MANUEL MARTINEZ CERTIFICATE No. 47182 STATE OF FLORIDA PROFESSIONAL ENGINEER
Feb [illegible]

ALPINE
Alpine Engineered Products, Inc.
1950 Marley Drive
Haines City, FL 33844
FL Certificate of Authorization # 567

WARNING TRUSSES REQUIRE EXTREME CARE IN FABRICATION, HANDLING, SHIPPING, INSTALLING AND BRACING. REFER TO BCSI 1-03 (BUILDING COMPONENT SAFETY INFORMATION), PUBLISHED BY TPI (TRUSS PLATE INSTITUTE, 583 D'ONOFRIO DR., SUITE 200, MADISON, WI 53719) AND WTCA (WOOD TRUSS COUNCIL OF AMERICA, 6300 ENTERPRISE LN, MADISON, WI 53719) FOR SAFETY PRACTICES PRIOR TO PERFORMING THESE FUNCTIONS. UNLESS OTHERWISE INDICATED, TOP CHORD SHALL HAVE PROPERLY ATTACHED STRUCTURAL PANELS AND BOTTOM CHORD SHALL HAVE A PROPERLY ATTACHED RIGID CEILING.

IMPORTANT FURNISH A COPY OF THIS DESIGN TO THE INSTALLATION CONTRACTOR. ALPINE ENGINEERED PRODUCTS, INC. SHALL NOT BE RESPONSIBLE FOR ANY DEVIATION FROM THIS DESIGN; ANY FAILURE TO BUILD THE TRUSS IN CONFORMANCE WITH TPI; OR FABRICATING, HANDLING, SHIPPING, INSTALLING & BRACING OF TRUSSES. DESIGN CONFORMS WITH APPLICABLE PROVISIONS OF NDS (NATIONAL DESIGN SPEC, BY AF&PA) AND TPI. ALPINE CONNECTOR PLATES ARE MADE OF 20/18/16GA (W,H/S/K) ASTM A653 GRADE 40/60 (W, K/H,S) GALV. STEEL. APPLY PLATES TO EACH FACE OF TRUSS AND, UNLESS OTHERWISE LOCATED ON THIS DESIGN, POSITION PER DRAWINGS 160A-Z. ANY INSPECTION OF PLATES FOLLOWED BY (1) SHALL BE PER ANNEX A3 OF TPI1-2002 SEC.3. A SEAL ON THIS DRAWING INDICATES ACCEPTANCE OF PROFESSIONAL ENGINEERING RESPONSIBILITY SOLELY FOR THE TRUSS COMPONENT DESIGN SHOWN. THE SUITABILITY AND USE OF THIS COMPONENT FOR ANY BUILDING IS THE RESPONSIBILITY OF THE BUILDING DESIGNER PER ANSI/TPI 1 SEC. 2.

TC LL	30.0 PSF	REF R487-- 84289
★TC DL	7.0 PSF	DATE 02/25/04
BC DL	10.0 PSF	DRW HCUSR487 04056109
BC LL	0.0 PSF	HC-ENG JB/MMA
TOT.LD.	47.0 PSF	SEQN- 44513
DUR.FAC.	1.33	FROM JP
SPACING	24.0"	JREF- 1SAP487_Z04

Top chord 2x4 SP #2 Dense
Bot chord 2x4 SP #2 Dense
Webs 2x4 SP #3

Left end vertical not exposed to wind pressure.

In lieu of rigid ceiling use purlins to brace BC, including chord ends. See other bracing notes for more details.

110 mph wind, 14.54 ft mean hgt, ASCE 7-98, CLOSED bldg, not located within 6.50 ft from roof edge, CAT II, EXP B, wind TC DL=5.0 psf, wind BC DL=5.0 psf.

(A) Continuous lateral bracing equally spaced on member.

Deflection meets L/240 live and L/180 total load. Creep increase factor for dead load is 1.00.

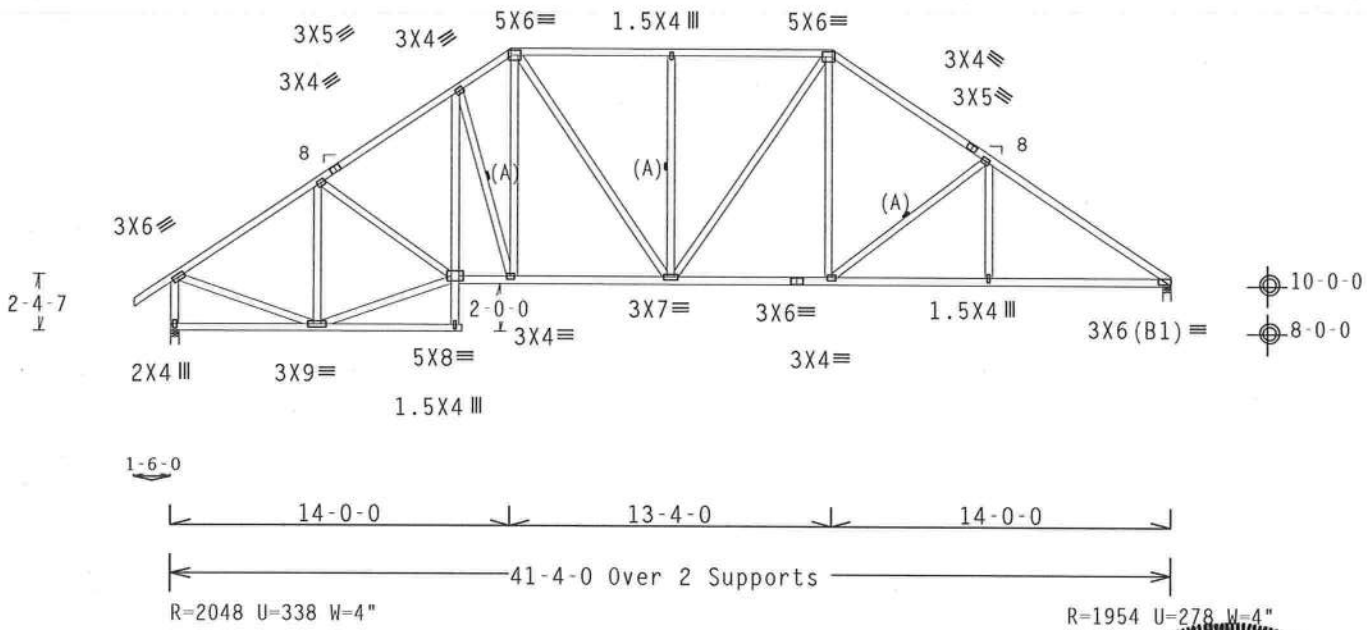

PLT TYP. Wave TPI 95 | Design Crit: TPI-1995 | 6.10 | FL/-/4/-/-/R/- | Scale =.125"/Ft.

ALPINE
Alpine Engineered Products, Inc.
1950 Marley Drive
Haines City, FL 33844
FL Certificate of Authorization # 567

WARNING TRUSSES REQUIRE EXTREME CARE IN FABRICATION, HANDLING, SHIPPING, INSTALLING AND BRACING. REFER TO BCSI 1-03 (BUILDING COMPONENT SAFETY INFORMATION), PUBLISHED BY TPI (TRUSS PLATE INSTITUTE, 583 D'ONOFRIO DR., SUITE 200, MADISON, WI 53719) AND WTCA (WOOD TRUSS COUNCIL OF AMERICA, 6300 ENTERPRISE LN, MADISON, WI 53719) FOR SAFETY PRACTICES PRIOR TO PERFORMING THESE FUNCTIONS. UNLESS OTHERWISE INDICATED, TOP CHORD SHALL HAVE PROPERLY ATTACHED STRUCTURAL PANELS AND BOTTOM CHORD SHALL HAVE A PROPERLY ATTACHED RIGID CEILING.

IMPORTANT FURNISH A COPY OF THIS DESIGN TO THE INSTALLATION CONTRACTOR. ALPINE ENGINEERED PRODUCTS, INC. SHALL NOT BE RESPONSIBLE FOR ANY DEVIATION FROM THIS DESIGN; ANY FAILURE TO BUILD THE TRUSS IN CONFORMANCE WITH TPI; OR FABRICATING, HANDLING, SHIPPING, INSTALLING & BRACING OF TRUSSES. DESIGN CONFORMS WITH APPLICABLE PROVISIONS OF NDS (NATIONAL DESIGN SPEC. BY AF&PA) AND TPI. ALPINE CONNECTOR PLATES ARE MADE OF 20/18/16GA (W,H/S/K) ASTM A653 GRADE 40/60 (W, K/H,S) GALV. STEEL. APPLY PLATES TO EACH FACE OF TRUSS AND, UNLESS OTHERWISE LOCATED ON THIS DESIGN, POSITION PER DRAWINGS 160A-Z. ANY INSPECTION OF PLATES FOLLOWED BY (1) SHALL BE PER ANNEX A3 OF TPI1-2002 SEC.3. A SEAL ON THIS DRAWING INDICATES ACCEPTANCE OF PROFESSIONAL ENGINEERING RESPONSIBILITY SOLELY FOR THE TRUSS COMPONENT DESIGN SHOWN. THE SUITABILITY AND USE OF THIS COMPONENT FOR ANY BUILDING IS THE RESPONSIBILITY OF THE BUILDING DESIGNER PER ANSI/TPI 1 SEC. 2.

MANUEL MARTINEZ
CERTIFICATE
No. 47182
STATE OF FLORIDA
PROFESSIONAL ENGINEER
FEB 25 '04

TC LL	30.0 PSF	REF R487-- 84290
TC DL	7.0 PSF	DATE 02/25/04
BC DL	10.0 PSF	DRW HCUSR487 04056069
BC LL	0.0 PSF	HC-ENG AML /MMA *
TOT.LD.	47.0 PSF	SEQN- 54711
DUR.FAC.	1.33	FROM JP
SPACING	24.0"	JREF- 1SAP487_Z04

(080-SIMOUE HOMES / LOT 83 CALLOWAY - H15A)

Top chord 2x4 SP #2 Dense
Bot chord 2x4 SP #2 Dense
Webs 2x4 SP #3

Left end vertical not exposed to wind pressure.

Deflection meets L/240 live and L/180 total load.

110 mph wind, 13.87 ft mean hgt, ASCE 7-98, CLOSED bldg, not located within 6.50 ft from roof edge, CAT II, EXP B, wind TC DL=5.0 psf, wind BC DL=5.0 psf.

(A) Continuous lateral bracing equally spaced on member.

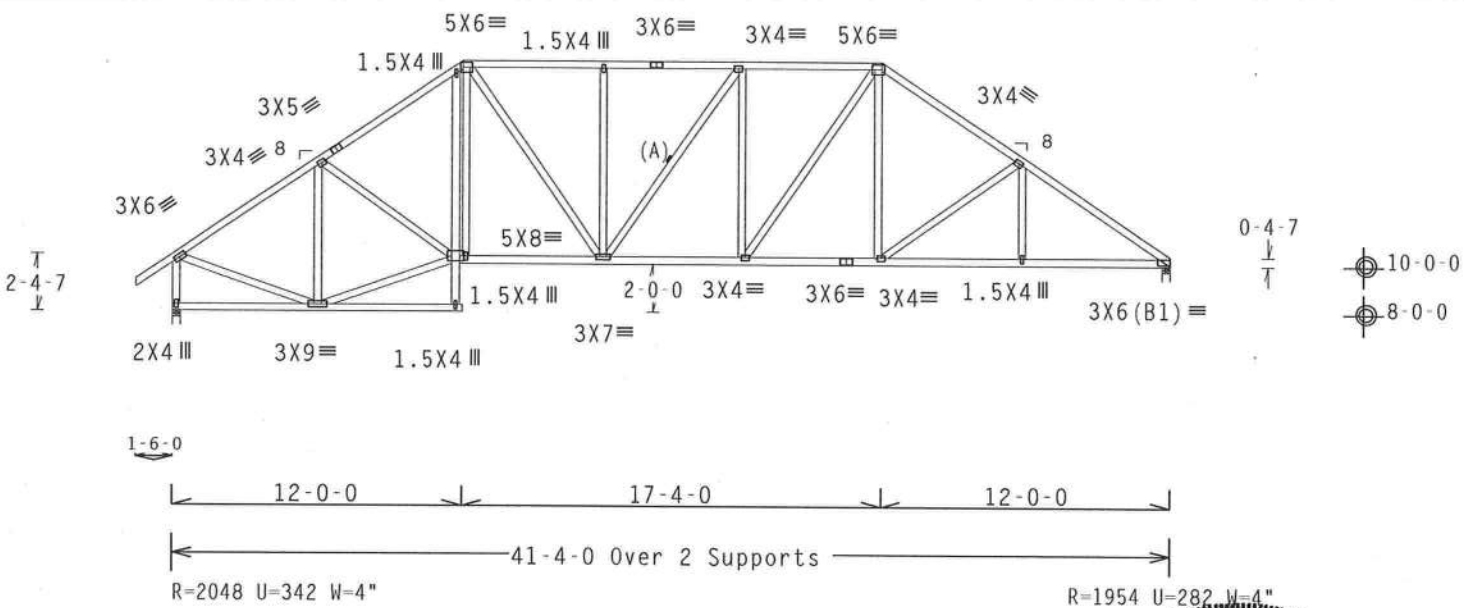

PLT TYP. Wave TPI Design Crit: TPI-1995(STD) 6.10 Ply:1 FL/-/4/-/-/R/- Scale =.125"/Ft.

ALPINE
Alpine Engineered Products, Inc.
1950 Marley Drive
Haines City, FL 33844
FL Certificate of Authorization # 567

WARNING TRUSSES REQUIRE EXTREME CARE IN FABRICATION, HANDLING, SHIPPING, INSTALLING AND BRACING. REFER TO BCSI 1-03 (BUILDING COMPONENT SAFETY INFORMATION), PUBLISHED BY TPI (TRUSS PLATE INSTITUTE, 583 D'ONOFRIO DR., SUITE 200, MADISON, WI 53719) AND WTCA (WOOD TRUSS COUNCIL OF AMERICA, 6300 ENTERPRISE LN, MADISON, WI 53719) FOR SAFETY PRACTICES PRIOR TO PERFORMING THESE FUNCTIONS. UNLESS OTHERWISE INDICATED, TOP CHORD SHALL HAVE PROPERLY ATTACHED STRUCTURAL PANELS AND BOTTOM CHORD SHALL HAVE A PROPERLY ATTACHED RIGID CEILING.

IMPORTANT FURNISH A COPY OF THIS DESIGN TO THE INSTALLATION CONTRACTOR. ALPINE ENGINEERED PRODUCTS, INC. SHALL NOT BE RESPONSIBLE FOR ANY DEVIATION FROM THIS DESIGN; ANY FAILURE TO BUILD THE TRUSS IN CONFORMANCE WITH TPI; OR FABRICATING, HANDLING, SHIPPING, INSTALLING & BRACING OF TRUSSES. DESIGN CONFORMS WITH APPLICABLE PROVISIONS OF NDS (NATIONAL DESIGN SPEC. BY AF&PA) AND TPI. ALPINE CONNECTOR PLATES ARE MADE OF 20/18/16GA (W,H/S/K) ASTM A653 GRADE 40/60 (W, K/H,S) GALV. STEEL. APPLY PLATES TO EACH FACE OF TRUSS AND, UNLESS OTHERWISE LOCATED ON THIS DESIGN, POSITION PER DRAWINGS 160A-Z. ANY INSPECTION OF PLATES FOLLOWED BY (1) SHALL BE PER ANNEX A3 OF TPI1-2002 SEC.3. A SEAL ON THIS DRAWING INDICATES ACCEPTANCE OF PROFESSIONAL ENGINEERING RESPONSIBILITY SOLELY FOR THE TRUSS COMPONENT DESIGN SHOWN. THE SUITABILITY AND USE OF THIS COMPONENT FOR ANY BUILDING IS THE RESPONSIBILITY OF THE BUILDING DESIGNER PER ANSI/TPI 1 SEC. 2.

MANUEL MARTINEZ
CERTIFICATE
No. 47182
STATE OF FLORIDA
PROFESSIONAL ENGINEER
Feb 25, '04

TC LL	30.0 PSF	REF	R487-- 84291
TC DL	7.0 PSF	DATE	02/25/04
BC DL	10.0 PSF	DRW	HCUSR487 04056091
BC LL	0.0 PSF	HC-ENG	JB/MMA *
TOT.LD.	47.0 PSF	SEQN-	44490
DUR.FAC.	1.33	FROM	JP
SPACING	24.0"	JREF-	1SAP487_Z04

(080-SIMQUE HOMES / LOT 83 CALLOWAY - H13A)

Top chord 2x4 SP #2 Dense
Bot chord 2x4 SP #2 Dense
Webs 2x4 SP #3 :W5 2x4 SP #2 Dense:

Left end vertical not exposed to wind pressure.

(A) 1x4 "T" brace. 80% length of web member. Same species & grade or better. Attach with 8d nails @ 6" OC.

Deflection meets L/240 live and L/180 total load.

110 mph wind, 13.20 ft mean hgt, ASCE 7-98, CLOSED bldg, not located within 6.50 ft from roof edge, CAT II, EXP B, wind TC DL=5.0 psf, wind BC DL=5.0 psf.

Calculated horizontal deflection is 0.16" due to live load and 0.09" due to dead load.

(B) 2x6 "T" brace. 80% length of web member. Same species & grade or better. Attach with 16d nails @ 6" OC.

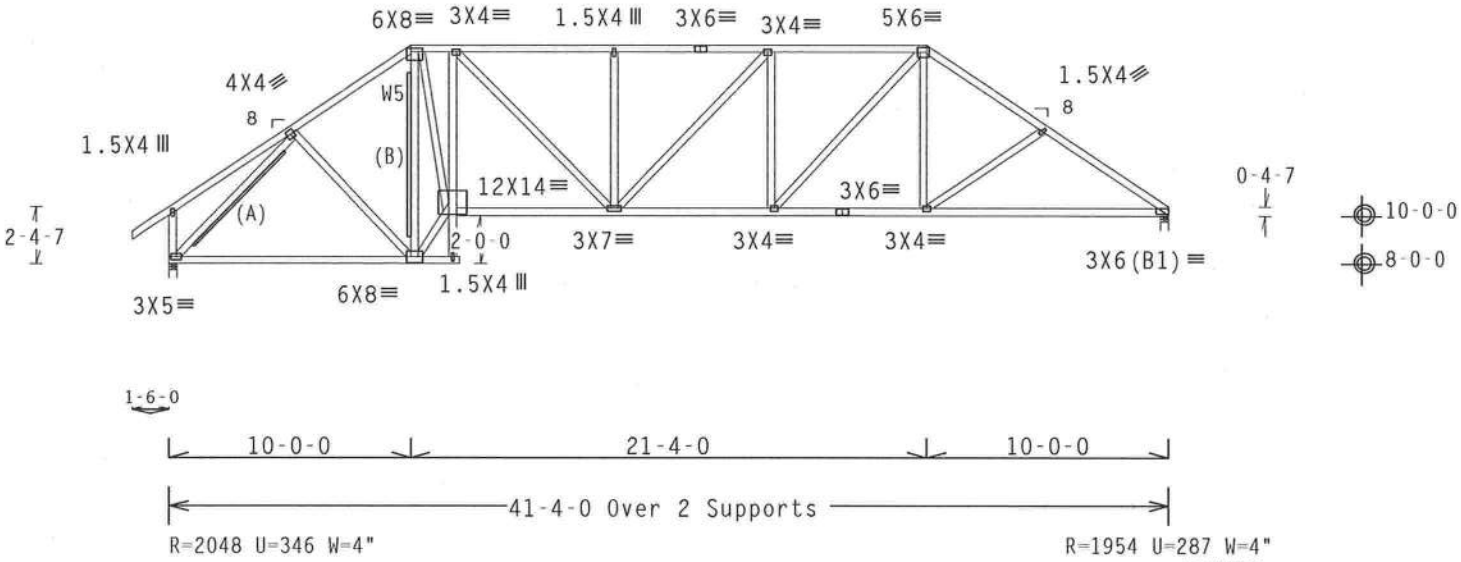

PLT TYP. Wave TPI Design Crit: TPI-1995(STD) 6.10 FL/-/4/-/-/R/- Scale =.125"/Ft.

ALPINE
Alpine Engineered Products, Inc.
1950 Marley Drive
Haines City, FL 33844
FL Certificate of Authorization # 567

WARNING TRUSSES REQUIRE EXTREME CARE IN FABRICATION, HANDLING, SHIPPING, INSTALLING AND BRACING. REFER TO BCSI 1-03 (BUILDING COMPONENT SAFETY INFORMATION), PUBLISHED BY TPI (TRUSS PLATE INSTITUTE, 583 D'ONOFRIO DR., SUITE 200, MADISON, WI 53719) AND WTCA (WOOD TRUSS COUNCIL OF AMERICA, 6300 ENTERPRISE LN, MADISON, WI 53719) FOR SAFETY PRACTICES PRIOR TO PERFORMING THESE FUNCTIONS. UNLESS OTHERWISE INDICATED, TOP CHORD SHALL HAVE PROPERLY ATTACHED STRUCTURAL PANELS AND BOTTOM CHORD SHALL HAVE A PROPERLY ATTACHED RIGID CEILING.

IMPORTANT FURNISH A COPY OF THIS DESIGN TO THE INSTALLATION CONTRACTOR. ALPINE ENGINEERED PRODUCTS, INC. SHALL NOT BE RESPONSIBLE FOR ANY DEVIATION FROM THIS DESIGN; ANY FAILURE TO BUILD THE TRUSS IN CONFORMANCE WITH TPI; OR FABRICATING, HANDLING, SHIPPING, INSTALLING & BRACING OF TRUSSES. DESIGN CONFORMS WITH APPLICABLE PROVISIONS OF NDS (NATIONAL DESIGN SPEC. BY AF&PA) AND TPI. ALPINE CONNECTOR PLATES ARE MADE OF 20/18/16GA (W,H/S/K) ASTM A653 GRADE 40/60 (W, K/H,S) GALV. STEEL. APPLY PLATES TO EACH FACE OF TRUSS AND, UNLESS OTHERWISE LOCATED ON THIS DESIGN, POSITION PER DRAWINGS 160A-Z. ANY INSPECTION OF PLATES FOLLOWED BY (1) SHALL BE PER ANNEX A3 OF TPI1-2002 SEC.3. A SEAL ON THIS DRAWING INDICATES ACCEPTANCE OF PROFESSIONAL ENGINEERING RESPONSIBILITY SOLELY FOR THE TRUSS COMPONENT DESIGN SHOWN. THE SUITABILITY AND USE OF THIS COMPONENT FOR ANY BUILDING IS THE RESPONSIBILITY OF THE BUILDING DESIGNER PER ANSI/TPI 1 SEC. 2.

MANUEL MARTINEZ
CERTIFICATE
No. 47182
STATE OF FLORIDA
PROFESSIONAL ENGINEER
2-25-04

TC LL	30.0 PSF	REF R487-- 84292
TC DL	7.0 PSF	DATE 02/25/04
BC DL	10.0 PSF	DRW HCUSR487 04056092
BC LL	0.0 PSF	HC-ENG JB/MMA *
TOT.LD.	47.0 PSF	SEQN- 44496
DUR.FAC.	1.33	FROM JP
SPACING	24.0"	JREF- 1SAP487_Z04

Top chord 2x4 SP #2 Dense
Bot chord 2x4 SP #2 Dense
Webs 2x4 SP #3

End verticals not exposed to wind pressure.

(A) 1x4 "T" brace. 80% length of web member. Same species & grade or better. Attach with 8d nails @ 6" OC.

110 mph wind, 12.54 ft mean hgt, ASCE 7-98, CLOSED bldg, not located within 6.50 ft from roof edge, CAT II, EXP B, wind TC DL=5.0 psf, wind BC DL=5.0 psf.

H = recommended connection based on manufacturer tested capacities and calculations. Conditions may exist that require different connections than indicated. Refer to manufacturer publication for additional information.

Deflection meets L/240 live and L/180 total load.

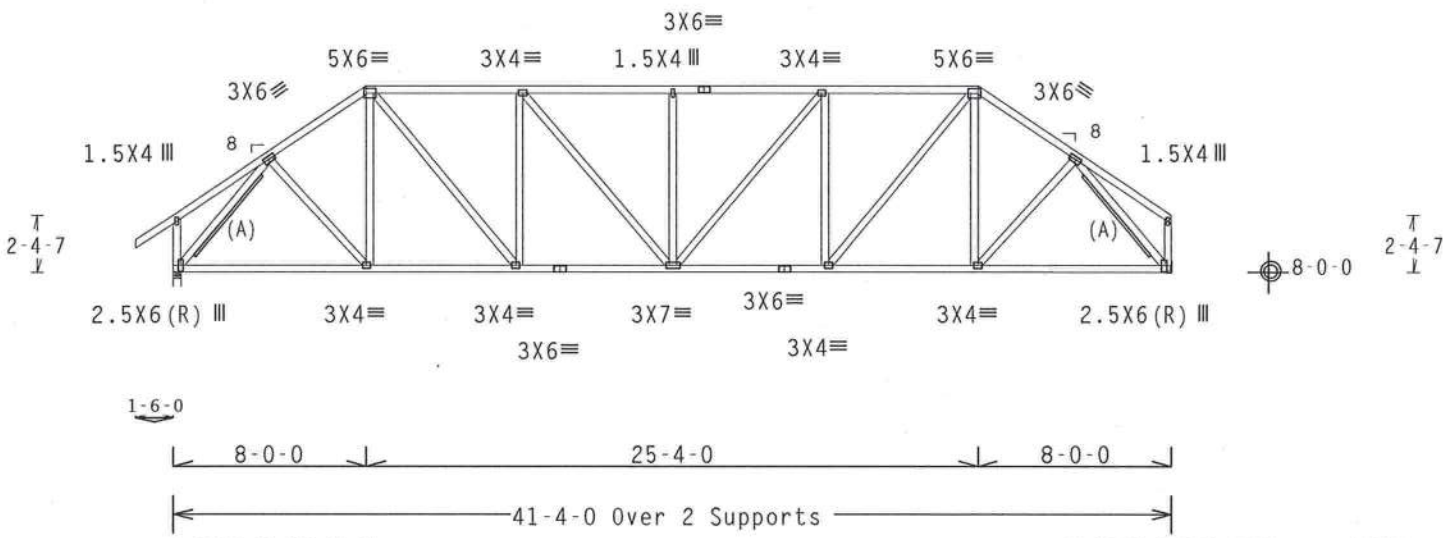

R=2062 U=352 W=4"

R=1941 U=291 H=Simpson HUS26
w/ (6) [illegible] 5" nails in Truss
w/ [illegible] nails in Girder
G[illegible] Pine

PLT TYP. Wave TPI | Design Crit: TPI-1995(STD) | 6.10 [illegible] 1:1 | FL/-/4/-/-/R/- | Scale =.125"/Ft.

ALPINE
Alpine Engineered Products, Inc.
1950 Marley Drive
Haines City, FL 33844
FL Certificate of Authorization # 567

WARNING TRUSSES REQUIRE EXTREME CARE IN FABRICATION, HANDLING, SHIPPING, INSTALLING AND BRACING. REFER TO BCSI 1-03 (BUILDING COMPONENT SAFETY INFORMATION), PUBLISHED BY TPI (TRUSS PLATE INSTITUTE, 583 D'ONOFRIO DR., SUITE 200, MADISON, WI 53719) AND WTCA (WOOD TRUSS COUNCIL OF AMERICA, 6300 ENTERPRISE LN. MADISON, WI 53719) FOR SAFETY PRACTICES PRIOR TO PERFORMING THESE FUNCTIONS. UNLESS OTHERWISE INDICATED, TOP CHORD SHALL HAVE PROPERLY ATTACHED STRUCTURAL PANELS AND BOTTOM CHORD SHALL HAVE A PROPERLY ATTACHED RIGID CEILING.

IMPORTANT FURNISH A COPY OF THIS DESIGN TO THE INSTALLATION CONTRACTOR. ALPINE ENGINEERED PRODUCTS, INC. SHALL NOT BE RESPONSIBLE FOR ANY DEVIATION FROM THIS DESIGN; ANY FAILURE TO BUILD THE TRUSS IN CONFORMANCE WITH TPI; OR FABRICATING, HANDLING, SHIPPING, INSTALLING & BRACING OF TRUSSES. DESIGN CONFORMS WITH APPLICABLE PROVISIONS OF NDS (NATIONAL DESIGN SPEC, BY AF&PA) AND TPI. ALPINE CONNECTOR PLATES ARE MADE OF 20/18/16GA (W,H/S/K) ASTM A653 GRADE 40/60 (W, K/H,S) GALV. STEEL. APPLY PLATES TO EACH FACE OF TRUSS AND, UNLESS OTHERWISE LOCATED ON THIS DESIGN, POSITION PER DRAWINGS 160A-Z. ANY INSPECTION OF PLATES FOLLOWED BY (1) SHALL BE PER ANNEX A3 OF TPI1-2002 SEC.3. A SEAL ON THIS DRAWING INDICATES ACCEPTANCE OF PROFESSIONAL ENGINEERING RESPONSIBILITY SOLELY FOR THE TRUSS COMPONENT DESIGN SHOWN. THE SUITABILITY AND USE OF THIS COMPONENT FOR ANY BUILDING IS THE RESPONSIBILITY OF THE BUILDING DESIGNER PER ANSI/TPI 1 SEC. 2.

MANUEL MARTINEZ CERTIFICATE No. 47182 STATE OF FLORIDA PROFESSIONAL ENGINEER
Feb [illegible]

TC LL	30.0 PSF	REF R487-- 84293
TC DL	7.0 PSF	DATE 02/25/04
BC DL	10.0 PSF	DRW HCUSR487 04056110
BC LL	0.0 PSF	HC-ENG JB/MMA
TOT.LD.	47.0 PSF	SEQN- 44501
DUR.FAC.	1.33	FROM JP
SPACING	24.0"	JREF- 1SAP487_Z04

(080-SIMQUE HOMES / LOT 83 CALLOWAY - H9A)

Top chord 2x4 SP #2 Dense
Bot chord 2x4 SP #2 Dense
Webs 2x4 SP #3

End verticals not exposed to wind pressure.

(A) Continuous lateral bracing equally spaced on member.

Deflection meets L/240 live and L/180 total load.

110 mph wind, 11.87 ft mean hgt, ASCE 7-98, CLOSED bldg, not located within 6.50 ft from roof edge, CAT II, EXP B, wind TC DL=5.0 psf, wind BC DL=5.0 psf.

H = recommended connection based on manufacturer tested capacities and calculations. Conditions may exist that require different connections than indicated. Refer to manufacturer publication for additional information.

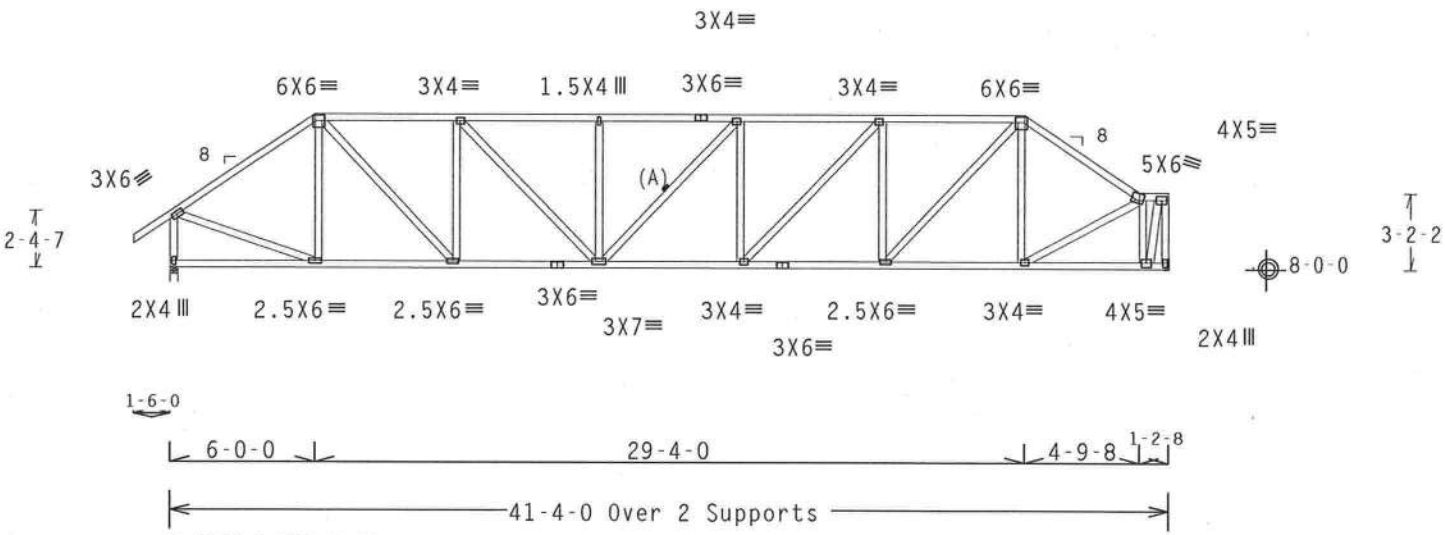

R=2062 U=355 W=4"

R=1941 U=298 H=Simpson HUS26
w/ (6) [illegible] 2.5" nails in Truss
w/ [illegible] 2.5" nails in Girder
Gi[illegible] Pine

PLT TYP. Wave TPI

Design Crit: TPI-1995(STD)

6.10 [illegible] FL/-/4/-/-/R/-

Scale =.125"/Ft.

ALPINE

Alpine Engineered Products, Inc.
1950 Marley Drive
Haines City, FL 33844
FL Certificate of Authorization # 567

WARNING TRUSSES REQUIRE EXTREME CARE IN FABRICATION, HANDLING, SHIPPING, INSTALLING AND BRACING. REFER TO BCSI 1-03 (BUILDING COMPONENT SAFETY INFORMATION), PUBLISHED BY TPI (TRUSS PLATE INSTITUTE, 583 D'ONOFRIO DR., SUITE 200, MADISON, WI 53719) AND WTCA (WOOD TRUSS COUNCIL OF AMERICA, 6300 ENTERPRISE LN, MADISON, WI 53719) FOR SAFETY PRACTICES PRIOR TO PERFORMING THESE FUNCTIONS. UNLESS OTHERWISE INDICATED, TOP CHORD SHALL HAVE PROPERLY ATTACHED STRUCTURAL PANELS AND BOTTOM CHORD SHALL HAVE A PROPERLY ATTACHED RIGID CEILING.

IMPORTANT FURNISH A COPY OF THIS DESIGN TO THE INSTALLATION CONTRACTOR. ALPINE ENGINEERED PRODUCTS, INC. SHALL NOT BE RESPONSIBLE FOR ANY DEVIATION FROM THIS DESIGN; ANY FAILURE TO BUILD THE TRUSS IN CONFORMANCE WITH TPI; OR FABRICATING, HANDLING, SHIPPING, INSTALLING & BRACING OF TRUSSES. DESIGN CONFORMS WITH APPLICABLE PROVISIONS OF NDS (NATIONAL DESIGN SPEC, BY AF&PA) AND TPI. ALPINE CONNECTOR PLATES ARE MADE OF 20/18/16GA (W,H/S/K) ASTM A653 GRADE 40/60 (W, K/H,S) GALV. STEEL. APPLY PLATES TO EACH FACE OF TRUSS AND, UNLESS OTHERWISE LOCATED ON THIS DESIGN, POSITION PER DRAWINGS 160A-Z. ANY INSPECTION OF PLATES FOLLOWED BY (1) SHALL BE PER ANNEX A3 OF TPI1-2002 SEC.3. A SEAL ON THIS DRAWING INDICATES ACCEPTANCE OF PROFESSIONAL ENGINEERING RESPONSIBILITY SOLELY FOR THE TRUSS COMPONENT DESIGN SHOWN. THE SUITABILITY AND USE OF THIS COMPONENT FOR ANY BUILDING IS THE RESPONSIBILITY OF THE BUILDING DESIGNER PER ANSI/TPI 1 SEC. 2.

MANUEL MARTINEZ
CERTIFICATE
No. 47182
STATE OF FLORIDA
PROFESSIONAL ENGINEER
[illegible] 25-04

TC LL	30.0 PSF	REF R487-- 84294
TC DL	7.0 PSF	DATE 02/25/04
BC DL	10.0 PSF	DRW HCUSR487 04056111
BC LL	0.0 PSF	HC-ENG JB/MMA
TOT.LD.	47.0 PSF	SEQN- 44506
DUR.FAC.	1.33	FROM JP
SPACING	24.0"	JREF- 1SAP487_Z04

TOP CHORD 2x4 SP #2 Dense
BOT CHORD 2x4 SP #2 Dense
WEBS 2x4 SP #3

SPECIAL LOADS
------(LUMBER DUR.FAC.=1.33 / PLATE DUR.FAC.=1.33)

TC - From	96 PLF at	-1.50 to	96 PLF at	22.83
BC - From	4 PLF at	-1.50 to	4 PLF at	0.00
BC - From	20 PLF at	0.00 to	20 PLF at	21.33
BC - From	4 PLF at	21.33 to	4 PLF at	22.83

110 MPH WIND, 11.25 FT MEAN HGT, ASCE 7-98, CLOSED BLDG, LOCATED ANYWHERE IN ROOF, CAT II, EXP B, WIND TCDL=5.0 PSF, WIND BCDL=5.0 PSF.

SEE DWGS A11015EC0901 & GBLLETIN1001 FOR MORE REQUIREMENTS.

DEFLECTION MEETS L/240 LIVE AND L/180 TOTAL LOAD.

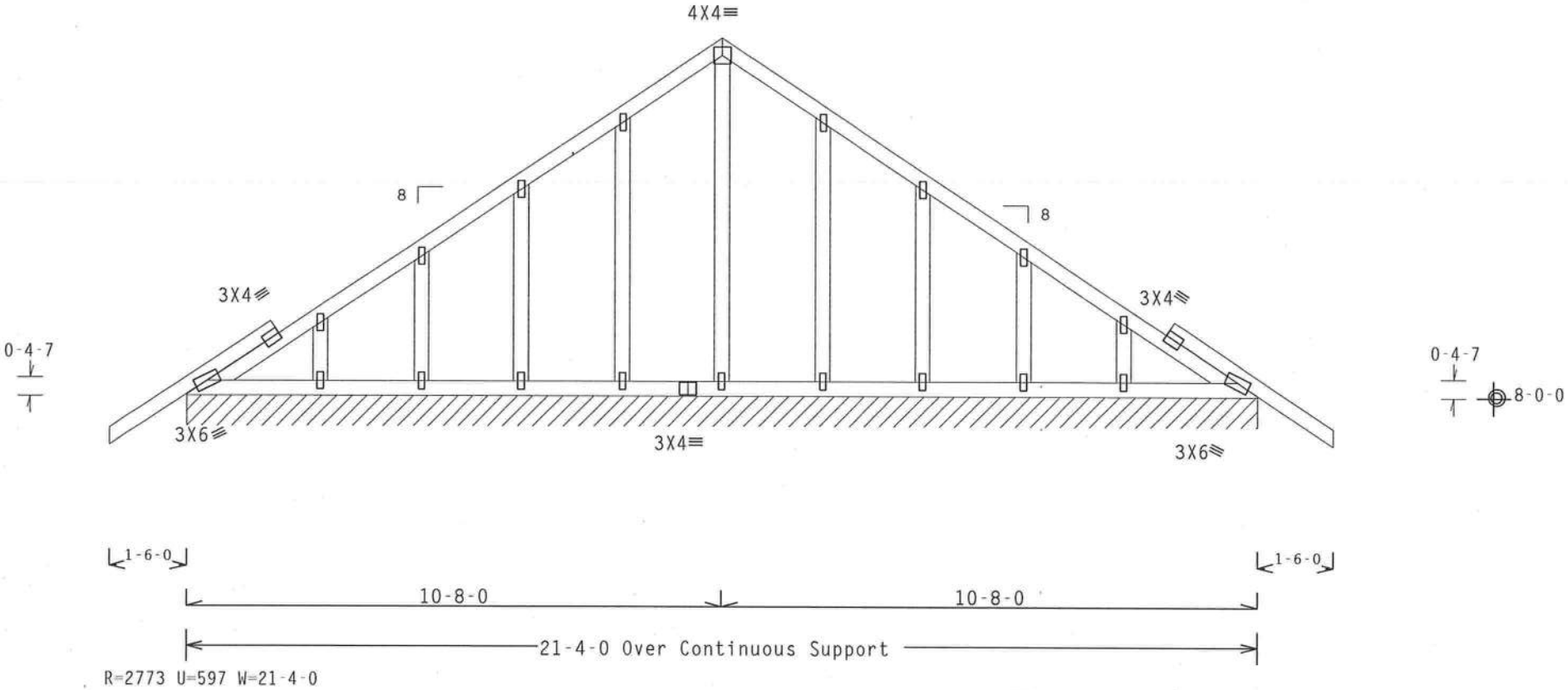

Note: All Plates Are W1.5X4 Except As Shown.

PLT TYP. Wave TPI95 Design Crit: TPI-1995 6.10 FL/-/4/-/-/R/- Scale =.3125"/Ft.

ALPINE
Alpine Engineered Products, Inc.
1950 Marley Drive
Haines City, FL 33844
FL Certificate of Authorization # 567

WARNING TRUSSES REQUIRE EXTREME CARE IN FABRICATION, HANDLING, SHIPPING, INSTALLING AND BRACING. REFER TO BCSI 1-03 (BUILDING COMPONENT SAFETY INFORMATION), PUBLISHED BY TPI (TRUSS PLATE INSTITUTE, 583 D'ONOFRIO DR., SUITE 200, MADISON, WI 53719) AND WTCA (WOOD TRUSS COUNCIL OF AMERICA, 6300 ENTERPRISE LN, MADISON, WI 53719) FOR SAFETY PRACTICES PRIOR TO PERFORMING THESE FUNCTIONS. UNLESS OTHERWISE INDICATED, TOP CHORD SHALL HAVE PROPERLY ATTACHED STRUCTURAL PANELS AND BOTTOM CHORD SHALL HAVE A PROPERLY ATTACHED RIGID CEILING.

IMPORTANT FURNISH A COPY OF THIS DESIGN TO THE INSTALLATION CONTRACTOR. ALPINE ENGINEERED PRODUCTS, INC. SHALL NOT BE RESPONSIBLE FOR ANY DEVIATION FROM THIS DESIGN; ANY FAILURE TO BUILD THE TRUSS IN CONFORMANCE WITH TPI; OR FABRICATING, HANDLING, SHIPPING, INSTALLING & BRACING OF TRUSSES. DESIGN CONFORMS WITH APPLICABLE PROVISIONS OF NDS (NATIONAL DESIGN SPEC. BY AF&PA) AND TPI. ALPINE CONNECTOR PLATES ARE MADE OF 20/18/16GA (W,H/S/K) ASTM A653 GRADE 40/60 (W, K/H,S) GALV. STEEL. APPLY PLATES TO EACH FACE OF TRUSS AND, UNLESS OTHERWISE LOCATED ON THIS DESIGN, POSITION PER DRAWINGS 160A-2. ANY INSPECTION OF PLATES FOLLOWED BY (1) SHALL BE PER ANNEX A3 OF TPI1-2002 SEC.3. A SEAL ON THIS DRAWING INDICATES ACCEPTANCE OF PROFESSIONAL ENGINEERING RESPONSIBILITY SOLELY FOR THE TRUSS COMPONENT DESIGN SHOWN. THE SUITABILITY AND USE OF THIS COMPONENT FOR ANY BUILDING IS THE RESPONSIBILITY OF THE BUILDING DESIGNER PER ANSI/TPI 1 SEC. 2.

MANUEL MARTINEZ CERTIFICATE No. 47182 STATE OF FLORIDA PROFESSIONAL ENGINEER 2-25-04

TC LL	30.0 PSF	REF	R487-- 84295
TC DL	7.0 PSF	DATE	02/25/04
BC DL	10.0 PSF	DRW	HCUSR487 04056071
BC LL	0.0 PSF	HC-ENG	JB/MMA
TOT.LD.	47.0 PSF	SEQN-	44097
DUR.FAC.	1.33	FROM	JP
SPACING	SEE ABOVE	JREF-	1SAP487_Z04

TOP CHORD 2x4 SP #2 Dense
BOT CHORD 2x4 SP #2 Dense
WEBS 2x4 SP #3

110 MPH WIND, 11.43 FT MEAN HGT, ASCE 7-98, CLOSED BLDG, LOCATED ANYWHERE IN ROOF, CAT II, EXP B, WIND TCDL=5.0 PSF, WIND BCDL=5.0 PSF.

DEFLECTION MEETS L/240 LIVE AND L/180 TOTAL LOAD.

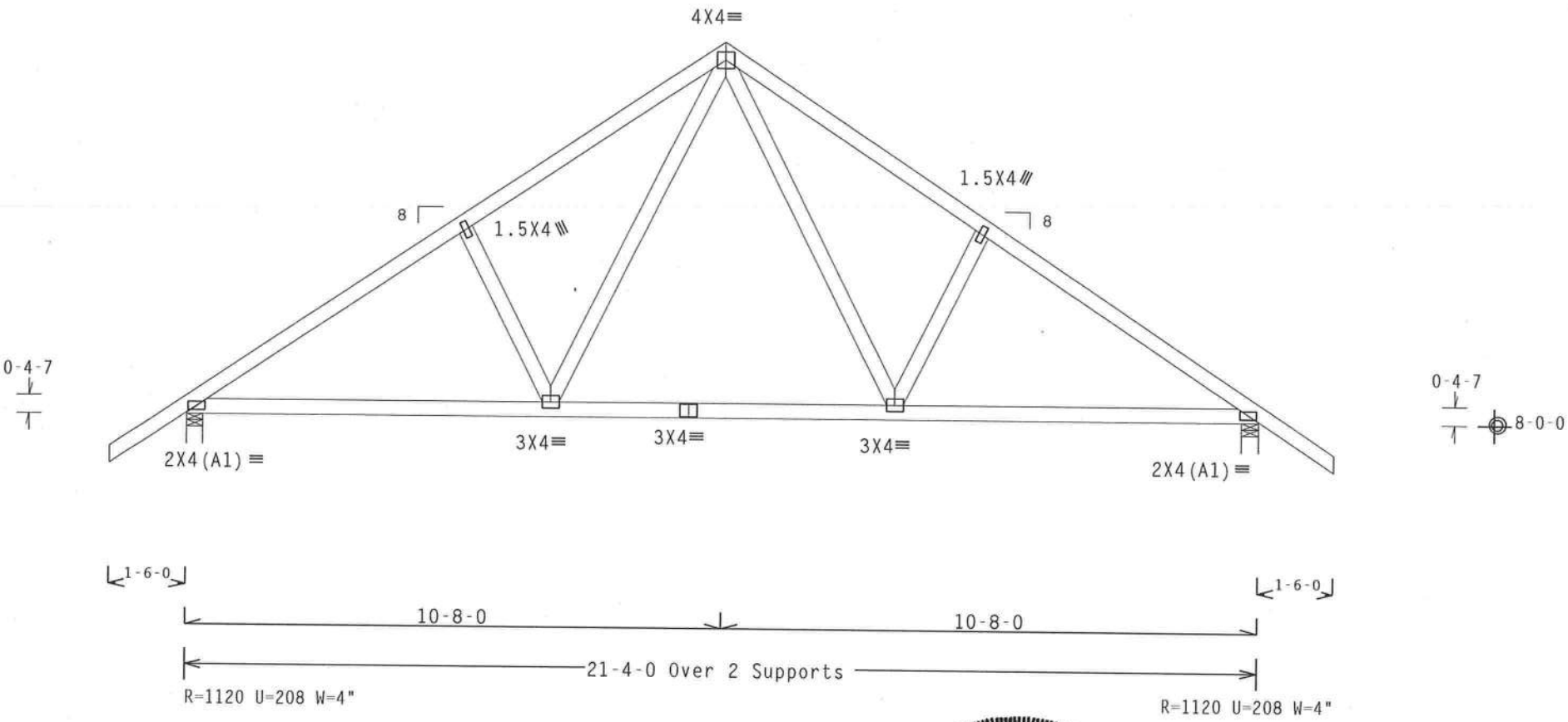

PLT TYP. Wave TPI95 | Design Crit: TPI-1995 | 6.10 | FL/-/4/-/-/R/-

WARNING TRUSSES REQUIRE EXTREME CARE IN FABRICATION, HANDLING, SHIPPING, INSTALLING AND BRACING. REFER TO BCSI 1-03 (BUILDING COMPONENT SAFETY INFORMATION), PUBLISHED BY TPI (TRUSS PLATE INSTITUTE, 583 D'ONOFRIO DR., SUITE 200, MADISON, WI 53719) AND WTCA (WOOD TRUSS COUNCIL OF AMERICA, 6300 ENTERPRISE LN, MADISON, WI 53719) FOR SAFETY PRACTICES PRIOR TO PERFORMING THESE FUNCTIONS. UNLESS OTHERWISE INDICATED, TOP CHORD SHALL HAVE PROPERLY ATTACHED STRUCTURAL PANELS AND BOTTOM CHORD SHALL HAVE A PROPERLY ATTACHED RIGID CEILING.

IMPORTANT FURNISH A COPY OF THIS DESIGN TO THE INSTALLATION CONTRACTOR. ALPINE ENGINEERED PRODUCTS, INC. SHALL NOT BE RESPONSIBLE FOR ANY DEVIATION FROM THIS DESIGN; ANY FAILURE TO BUILD THE TRUSS IN CONFORMANCE WITH TPI; OR FABRICATING, HANDLING, SHIPPING, INSTALLING & BRACING OF TRUSSES. DESIGN CONFORMS WITH APPLICABLE PROVISIONS OF NDS (NATIONAL DESIGN SPEC, BY AF&PA) AND TPI. ALPINE CONNECTOR PLATES ARE MADE OF 20/18/16GA (W,H/S/K) ASTM A653 GRADE 40/60 (W, K/H,S) GALV. STEEL. APPLY PLATES TO EACH FACE OF TRUSS AND, UNLESS OTHERWISE LOCATED ON THIS DESIGN, POSITION PER DRAWINGS 160A-Z. ANY INSPECTION OF PLATES FOLLOWED BY (I) SHALL BE PER ANNEX A3 OF TPI1-2002 SEC.3. A SEAL ON THIS DRAWING INDICATES ACCEPTANCE OF PROFESSIONAL ENGINEERING RESPONSIBILITY SOLELY FOR THE TRUSS COMPONENT DESIGN SHOWN. THE SUITABILITY AND USE OF THIS COMPONENT FOR ANY BUILDING IS THE RESPONSIBILITY OF THE BUILDING DESIGNER PER ANSI/TPI 1 SEC. 2.

ALPINE
Alpine Engineered Products, Inc.
1950 Marley Drive
Haines City, FL 33844
FL Certificate of Authorization # 567

MANUEL MARTINEZ
CERTIFICATE
No. 47182
STATE OF FLORIDA
PROFESSIONAL ENGINEER

TC LL	30.0 PSF	REF R487-- 84296
TC DL	7.0 PSF	DATE 02/25/04
BC DL	10.0 PSF	DRW HCUSR487 04056070
BC LL	0.0 PSF	HC-ENG JB/MMA *
TOT.LD.	47.0 PSF	SEQN- 44101
DUR.FAC.	1.33	FROM JP
SPACING	24.0"	JREF- 1SAP487_Z04

Scale =.3125"/Ft.

(080-SIMQUE HOMES / LOT 83 CALLOWAY - B-1)

Top chord 2x4 SP #2 Dense
Bot chord 2x6 SP 2400f-2.0E
Webs 2x4 SP #3 :W5 2x4 SP #2 Dense:
:Rt Wedge 2x4 SP #3:

SPECIAL LOADS
------(LUMBER DUR.FAC.=1.33 / PLATE DUR.FAC.=1.33)
TC - From 74 PLF at -1.50 to 74 PLF at 22.83
BC - From 4 PLF at -1.50 to 4 PLF at 0.00
BC - From 20 PLF at 0.00 to 20 PLF at 21.33
BC - From 4 PLF at 21.33 to 4 PLF at 22.83
BC - 3924 LB Conc. Load at 5.06
BC - 1931 LB Conc. Load at 7.06
BC - 1926 LB Conc. Load at 9.06, 11.06, 13.06, 15.06, 17.06
19.06

Deflection meets L/240 live and L/180 total load.

2 COMPLETE TRUSSES REQUIRED

NAILING SCHEDULE: (12d_common_nails)
TOP CHORD: 1 ROW @ 12" o.c.
BOT CHORD: 2 ROWS @ 6" o.c. (EACH ROW)
WEBS : 1 ROW @ 4" o.c.
USE EQUAL SPACING BETWEEN ROWS AND STAGGER NAILS
IN EACH ROW TO AVOID SPLITTING.

Bearing blocks: Nail type: 12d_common_nails

BRG	X-LOC	#BLOCKS	LENGTH/BLK	#NAILS/BLK	WALL PLATE
2	21.000'	1	12"	6	Match Truss

Bearing block to be same size and species as bottom chord.
Refer to drawing CNBRGBLK0503 for additional information.

110 mph wind, 15.00 ft mean hgt, ASCE 7-98, CLOSED bldg, not located within 6.50 ft from roof edge, CAT II, EXP B, wind TC DL=5.0 psf, wind BC DL=5.0 psf.

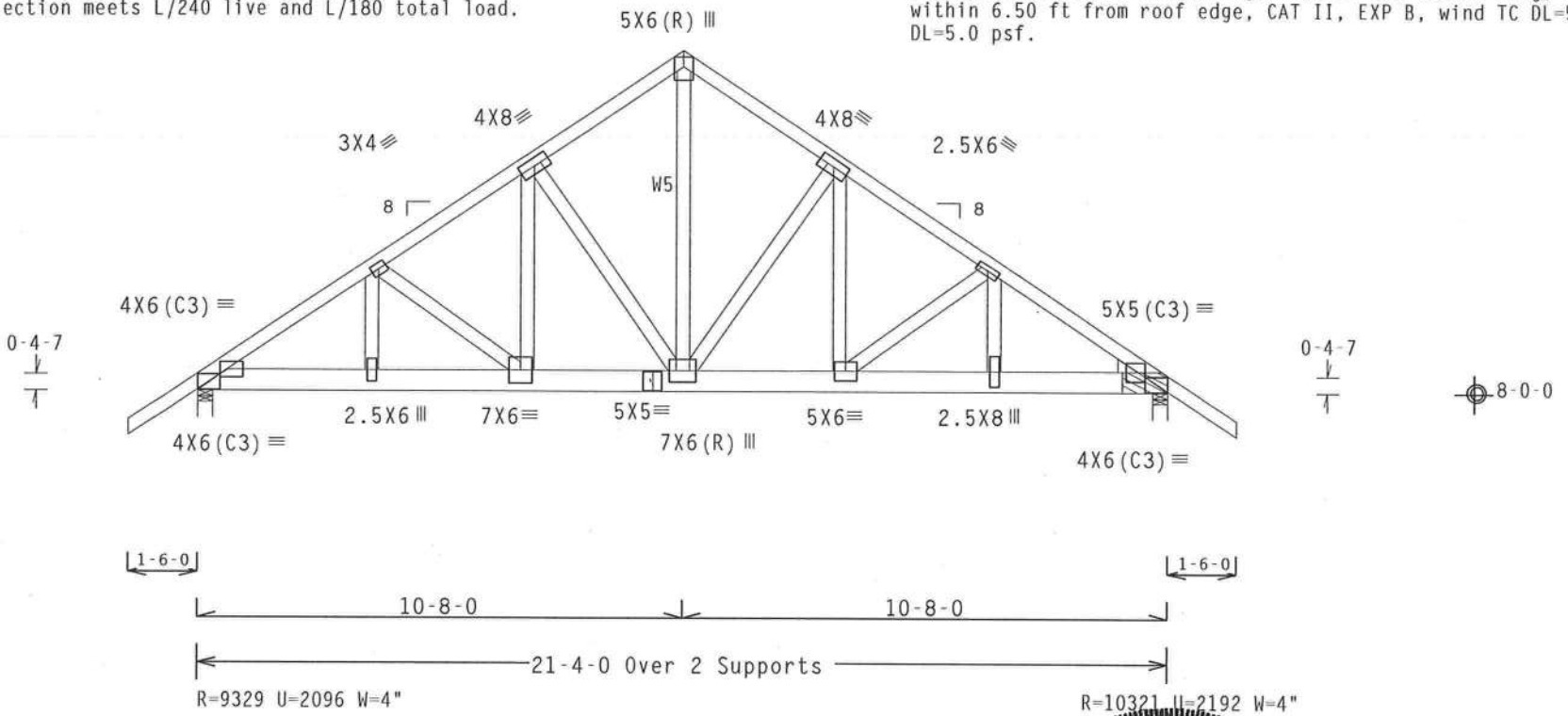

PLT TYP. Wave TPI | Design Crit: TPI-1995(STD) | 6.10 | A.Y.1 | FL/-/4/-/-/R/- | Scale =.25"/Ft.

ALPINE
Alpine Engineered Products, Inc.
1950 Marley Drive
Haines City, FL 33844
FL Certificate of Authorization # 567

WARNING TRUSSES REQUIRE EXTREME CARE IN FABRICATION, HANDLING, SHIPPING, INSTALLING AND BRACING. REFER TO BCSI 1-03 (BUILDING COMPONENT SAFETY INFORMATION), PUBLISHED BY TPI (TRUSS PLATE INSTITUTE, 583 D'ONOFRIO DR., SUITE 200, MADISON, WI 53719) AND WTCA (WOOD TRUSS COUNCIL OF AMERICA, 6300 ENTERPRISE LN, MADISON, WI 53719) FOR SAFETY PRACTICES PRIOR TO PERFORMING THESE FUNCTIONS. UNLESS OTHERWISE INDICATED, TOP CHORD SHALL HAVE PROPERLY ATTACHED STRUCTURAL PANELS AND BOTTOM CHORD SHALL HAVE A PROPERLY ATTACHED RIGID CEILING.

IMPORTANT FURNISH A COPY OF THIS DESIGN TO THE INSTALLATION CONTRACTOR. ALPINE ENGINEERED PRODUCTS, INC. SHALL NOT BE RESPONSIBLE FOR ANY DEVIATION FROM THIS DESIGN; ANY FAILURE TO BUILD THE TRUSS IN CONFORMANCE WITH TPI; OR FABRICATING, HANDLING, SHIPPING, INSTALLING & BRACING OF TRUSSES. DESIGN CONFORMS WITH APPLICABLE PROVISIONS OF NDS (NATIONAL DESIGN SPEC. BY AF&PA) AND TPI. ALPINE CONNECTOR PLATES ARE MADE OF 20/18/16GA (W,H/S/K) ASTM A653 GRADE 40/60 (W, K/H,S) GALV. STEEL. APPLY PLATES TO EACH FACE OF TRUSS AND, UNLESS OTHERWISE LOCATED ON THIS DESIGN, POSITION PER DRAWINGS 160A-Z. ANY INSPECTION OF PLATES FOLLOWED BY (1) SHALL BE PER ANNEX A3 OF TPI1-2002 SEC.3. A SEAL ON THIS DRAWING INDICATES ACCEPTANCE OF PROFESSIONAL ENGINEERING RESPONSIBILITY SOLELY FOR THE TRUSS COMPONENT DESIGN SHOWN. THE SUITABILITY AND USE OF THIS COMPONENT FOR ANY BUILDING IS THE RESPONSIBILITY OF THE BUILDING DESIGNER PER ANSI/TPI 1 SEC. 2.

MANUEL MARTINEZ
CERTIFICATE No. 47182
STATE OF FLORIDA
PROFESSIONAL ENGINEER
Feb 05, 2004

TC LL	30.0 PSF	REF R487-- 84297
TC DL	7.0 PSF	DATE 02/25/04
BC DL	10.0 PSF	DRW HCUSR487 04056112
BC LL	0.0 PSF	HC-ENG JB/MMA
TOT.LD.	47.0 PSF	SEQN- 44564
DUR.FAC.	1.33	FROM JP
SPACING	24.0"	JREF- 1SAP487_Z04

TOP CHORD 2x4 SP #2 Dense
BOT CHORD 2x4 SP #2 Dense
WEBS 2x4 SP #3

SPECIAL LOADS
------(LUMBER DUR.FAC.=1.33 / PLATE DUR.FAC.=1.33)
TC - From 96 PLF at -1.50 to 96 PLF at 12.17
BC - From 4 PLF at -1.50 to 4 PLF at 0.00
BC - From 20 PLF at 0.00 to 20 PLF at 10.67
BC - From 4 PLF at 10.67 to 4 PLF at 12.17

110 MPH WIND, 12.47 FT MEAN HGT, ASCE 7-98, CLOSED BLDG, LOCATED ANYWHERE IN ROOF, CAT II, EXP B, WIND TCDL=5.0 PSF, WIND BCDL=5.0 PSF.

SEE DWGS A11015EC0901 & GBLLETIN1001 FOR MORE REQUIREMENTS.

DEFLECTION MEETS L/240 LIVE AND L/180 TOTAL LOAD.

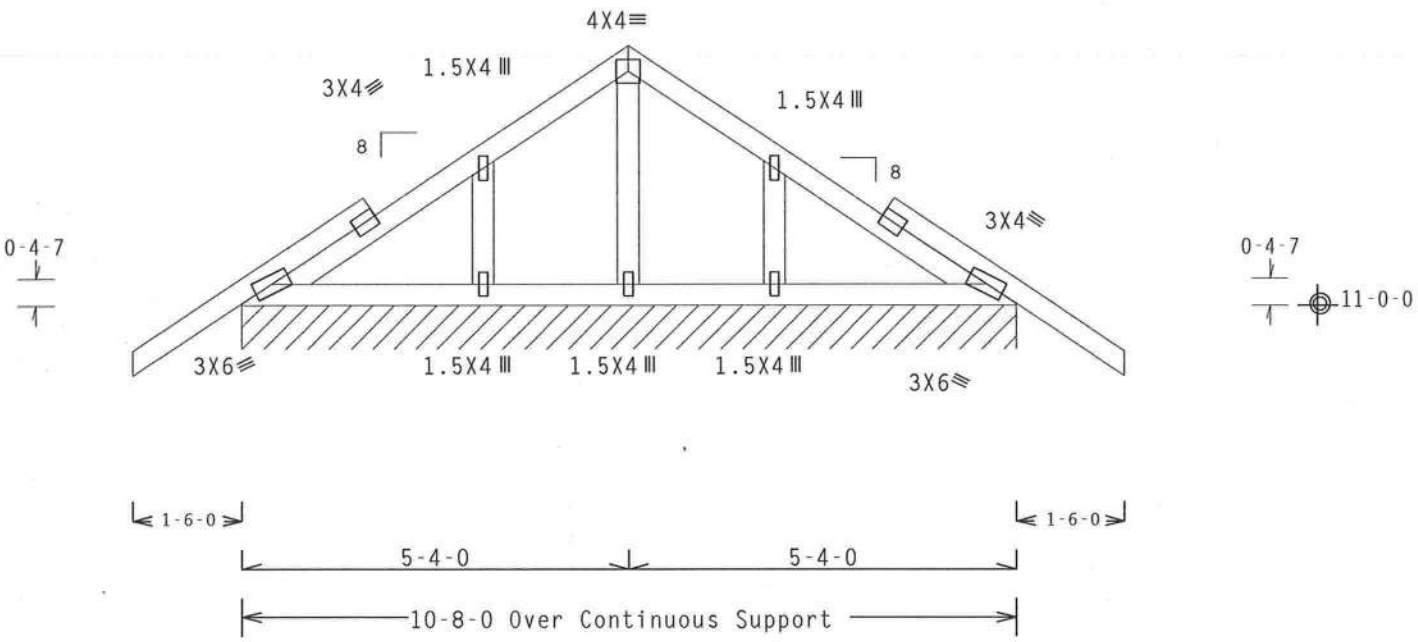

R=1535 U=448 W=10-8-0

PLT TYP. Wave TPI95 | Design Crit: TPI-1995 | 6.10 | FL/-/4/-/-/R/- | Scale =.375"/Ft.

ALPINE
Alpine Engineered Products, Inc.
1950 Marley Drive
Haines City, FL 33844
FL Certificate of Authorization # 567

WARNING TRUSSES REQUIRE EXTREME CARE IN FABRICATION, HANDLING, SHIPPING, INSTALLING AND BRACING. REFER TO BCSI 1-03 (BUILDING COMPONENT SAFETY INFORMATION), PUBLISHED BY TPI (TRUSS PLATE INSTITUTE, 583 D'ONOFRIO DR., SUITE 200, MADISON, WI 53719) AND WTCA (WOOD TRUSS COUNCIL OF AMERICA, 6300 ENTERPRISE LN, MADISON, WI 53719) FOR SAFETY PRACTICES PRIOR TO PERFORMING THESE FUNCTIONS. UNLESS OTHERWISE INDICATED, TOP CHORD SHALL HAVE PROPERLY ATTACHED STRUCTURAL PANELS AND BOTTOM CHORD SHALL HAVE A PROPERLY ATTACHED RIGID CEILING.

IMPORTANT FURNISH A COPY OF THIS DESIGN TO THE INSTALLATION CONTRACTOR. ALPINE ENGINEERED PRODUCTS, INC. SHALL NOT BE RESPONSIBLE FOR ANY DEVIATION FROM THIS DESIGN; ANY FAILURE TO BUILD THE TRUSS IN CONFORMANCE WITH TPI: OR FABRICATING, HANDLING, SHIPPING, INSTALLING & BRACING OF TRUSSES. DESIGN CONFORMS WITH APPLICABLE PROVISIONS OF NDS (NATIONAL DESIGN SPEC. BY AF&PA) AND TPI. ALPINE CONNECTOR PLATES ARE MADE OF 20/18/16GA (W,H/S/K) ASTM A653 GRADE 40/60 (W, K/H,S) GALV. STEEL. APPLY PLATES TO EACH FACE OF TRUSS AND, UNLESS OTHERWISE LOCATED ON THIS DESIGN, POSITION PER DRAWINGS 160A-Z. ANY INSPECTION OF PLATES FOLLOWED BY (1) SHALL BE PER ANNEX A3 OF TPI1-2002 SEC.3. A SEAL ON THIS DRAWING INDICATES ACCEPTANCE OF PROFESSIONAL ENGINEERING RESPONSIBILITY SOLELY FOR THE TRUSS COMPONENT DESIGN SHOWN. THE SUITABILITY AND USE OF THIS COMPONENT FOR ANY BUILDING IS THE RESPONSIBILITY OF THE BUILDING DESIGNER PER ANSI/TPI 1 SEC. 2.

MANUEL MARTINEZ CERTIFICATE No. 47182 STATE OF FLORIDA PROFESSIONAL ENGINEER

TC LL	30.0 PSF	REF R487-- 84298
TC DL	7.0 PSF	DATE 02/25/04
BC DL	10.0 PSF	DRW HCUSR487 04056082
BC LL	0.0 PSF	HC-ENG JB/MMA
TOT.LD.	47.0 PSF	SEQN- 44104
DUR.FAC.	1.33	FROM JP
SPACING	SEE ABOVE	JREF- 1SAP487_Z04

(080 -- 080-SIMQUE HOMES / LOT 83 CALLOWAY - C)

TOP CHORD 2x4 SP #2 Dense
BOT CHORD 2x4 SP #2 Dense
WEBS 2x4 SP #3

110 MPH WIND, 12.65 FT MEAN HGT, ASCE 7-98, CLOSED BLDG, LOCATED ANYWHERE IN ROOF, CAT II, EXP B, WIND TCDL=5.0 PSF, WIND BCDL=5.0 PSF.

DEFLECTION MEETS L/240 LIVE AND L/180 TOTAL LOAD.

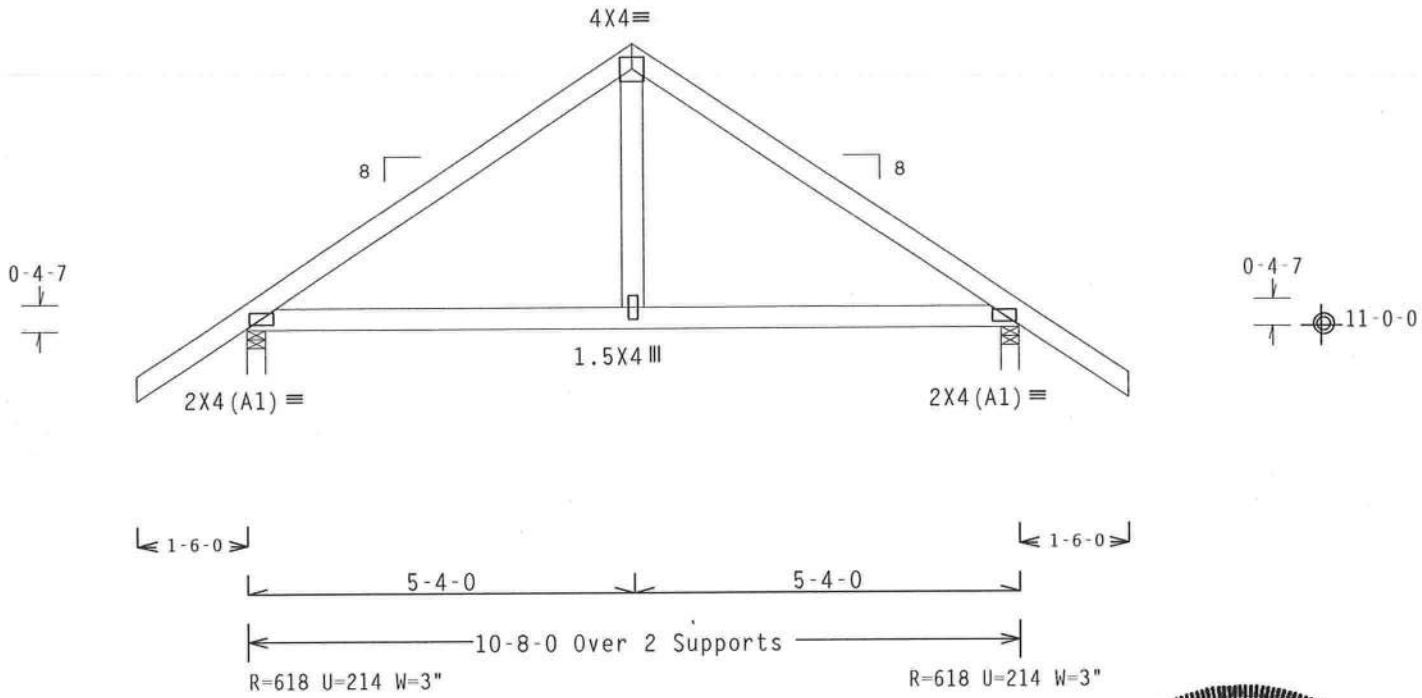

PLT TYP. Wave TPI95 | Design Crit: TPI-1995 | 6.10 | FL/-/4/-/-/R/- | Scale =.375"/Ft.

ALPINE

Alpine Engineered Products, Inc.
1950 Marley Drive
Haines City, FL 33844
FL Certificate of Authorization # 567

WARNING TRUSSES REQUIRE EXTREME CARE IN FABRICATION, HANDLING, SHIPPING, INSTALLING AND BRACING. REFER TO BCSI 1-03 (BUILDING COMPONENT SAFETY INFORMATION), PUBLISHED BY TPI (TRUSS PLATE INSTITUTE, 583 D'ONOFRIO DR., SUITE 200, MADISON, WI 53719) AND WTCA (WOOD TRUSS COUNCIL OF AMERICA, 6300 ENTERPRISE LN, MADISON, WI 53719) FOR SAFETY PRACTICES PRIOR TO PERFORMING THESE FUNCTIONS. UNLESS OTHERWISE INDICATED, TOP CHORD SHALL HAVE PROPERLY ATTACHED STRUCTURAL PANELS AND BOTTOM CHORD SHALL HAVE A PROPERLY ATTACHED RIGID CEILING.

IMPORTANT FURNISH A COPY OF THIS DESIGN TO THE INSTALLATION CONTRACTOR. ALPINE ENGINEERED PRODUCTS, INC. SHALL NOT BE RESPONSIBLE FOR ANY DEVIATION FROM THIS DESIGN; ANY FAILURE TO BUILD THE TRUSS IN CONFORMANCE WITH TPI; OR FABRICATING, HANDLING, SHIPPING, INSTALLING & BRACING OF TRUSSES. DESIGN CONFORMS WITH APPLICABLE PROVISIONS OF NDS (NATIONAL DESIGN SPEC, BY AF&PA) AND TPI. ALPINE CONNECTOR PLATES ARE MADE OF 20/18/16GA (W,H/S/K) ASTM A653 GRADE 40/60 (W, K/H,S) GALV. STEEL. APPLY PLATES TO EACH FACE OF TRUSS AND, UNLESS OTHERWISE LOCATED ON THIS DESIGN, POSITION PER DRAWINGS 160A-Z. ANY INSPECTION OF PLATES FOLLOWED BY (1) SHALL BE PER ANNEX A3 OF TPI1-2002 SEC.3. A SEAL ON THIS DRAWING INDICATES ACCEPTANCE OF PROFESSIONAL ENGINEERING RESPONSIBILITY SOLELY FOR THE TRUSS COMPONENT DESIGN SHOWN. THE SUITABILITY AND USE OF THIS COMPONENT FOR ANY BUILDING IS THE RESPONSIBILITY OF THE BUILDING DESIGNER PER ANSI/TPI 1 SEC. 2.

MANUEL MARTINEZ CERTIFICATE No. 47182 STATE OF FLORIDA PROFESSIONAL ENGINEER
Feb 25, 2004

TC LL	30.0 PSF	REF	R487-- 84299
★TC DL	7.0 PSF	DATE	02/25/04
BC DL	10.0 PSF	DRW	HCUSR487 04056079
BC LL	0.0 PSF	HC-ENG	JB/MMA *
TOT.LD.	47.0 PSF	SEQN-	44106
DUR.FAC.	1.33	FROM	JP
SPACING	24.0"	JREF-	1SAP487_Z04

TOP CHORD 2x4 SP #2 Dense
BOT CHORD 2x4 SP #2 Dense
WEBS 2x4 SP #3

110 MPH WIND, 13.15 FT MEAN HGT, ASCE 7-98, CLOSED BLDG, LOCATED ANYWHERE IN ROOF, CAT II, EXP B, WIND TCDL=5.0 PSF, WIND BCDL=5.0 PSF.

DEFLECTION MEETS L/240 LIVE AND L/180 TOTAL LOAD.

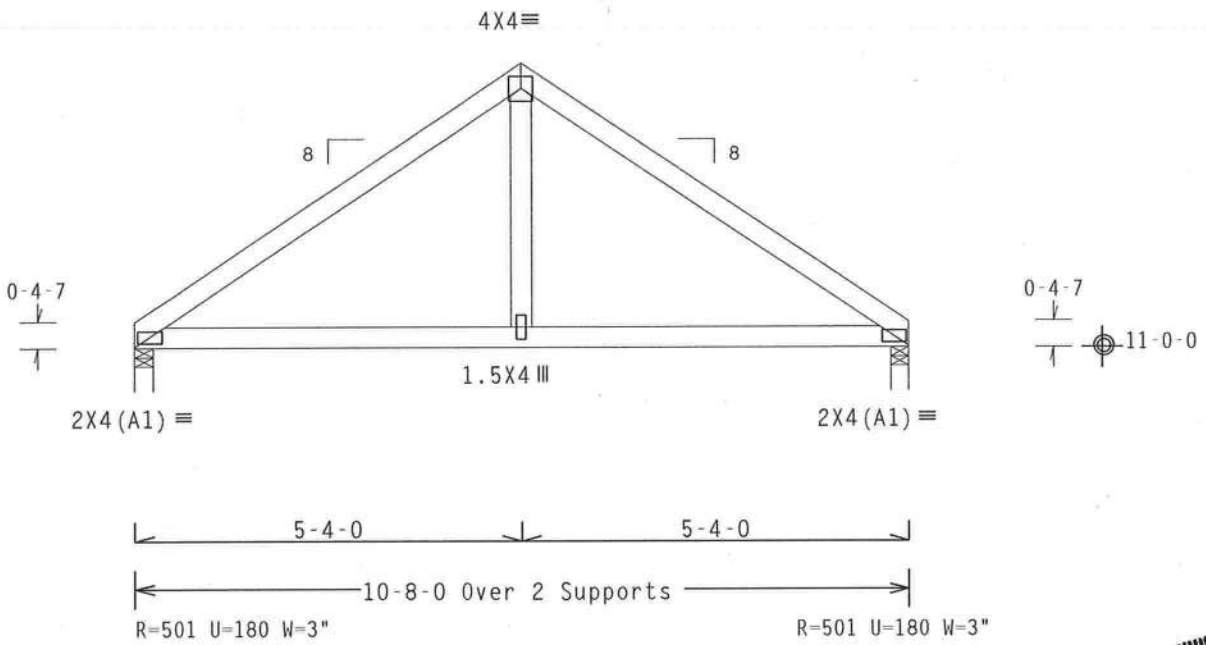

PLT TYP. Wave TPI95 | Design Crit: TPI-1995 | 6.10 | FL/-/4/-/-/R/- | Scale =.375"/Ft.

ALPINE
Alpine Engineered Products, Inc.
1950 Marley Drive
Haines City, FL 33844
FL Certificate of Authorization # 567

WARNING TRUSSES REQUIRE EXTREME CARE IN FABRICATION, HANDLING, SHIPPING, INSTALLING AND BRACING. REFER TO BCSI 1-03 (BUILDING COMPONENT SAFETY INFORMATION), PUBLISHED BY TPI (TRUSS PLATE INSTITUTE, 583 D'ONOFRIO DR., SUITE 200, MADISON, WI 53719) AND WTCA (WOOD TRUSS COUNCIL OF AMERICA, 6300 ENTERPRISE LN, MADISON, WI 53719) FOR SAFETY PRACTICES PRIOR TO PERFORMING THESE FUNCTIONS. UNLESS OTHERWISE INDICATED, TOP CHORD SHALL HAVE PROPERLY ATTACHED STRUCTURAL PANELS AND BOTTOM CHORD SHALL HAVE A PROPERLY ATTACHED RIGID CEILING.

IMPORTANT FURNISH A COPY OF THIS DESIGN TO THE INSTALLATION CONTRACTOR. ALPINE ENGINEERED PRODUCTS, INC. SHALL NOT BE RESPONSIBLE FOR ANY DEVIATION FROM THIS DESIGN; ANY FAILURE TO BUILD THE TRUSS IN CONFORMANCE WITH TPI; OR FABRICATING, HANDLING, SHIPPING, INSTALLING & BRACING OF TRUSSES. DESIGN CONFORMS WITH APPLICABLE PROVISIONS OF NDS (NATIONAL DESIGN SPEC. BY AF&PA) AND TPI. ALPINE CONNECTOR PLATES ARE MADE OF 20/18/16GA (W,H/S/K) ASTM A653 GRADE 40/60 (W, K/H,S) GALV. STEEL. APPLY PLATES TO EACH FACE OF TRUSS AND, UNLESS OTHERWISE LOCATED ON THIS DESIGN, POSITION PER DRAWINGS 160A-Z. ANY INSPECTION OF PLATES FOLLOWED BY (1) SHALL BE PER ANNEX A3 OF TPI1-2002 SEC.3. A SEAL ON THIS DRAWING INDICATES ACCEPTANCE OF PROFESSIONAL ENGINEERING RESPONSIBILITY SOLELY FOR THE TRUSS COMPONENT DESIGN SHOWN. THE SUITABILITY AND USE OF THIS COMPONENT FOR ANY BUILDING IS THE RESPONSIBILITY OF THE BUILDING DESIGNER PER ANSI/TPI 1 SEC. 2.

MANUEL MARTINEZ CERTIFICATE No. 47182 STATE OF FLORIDA PROFESSIONAL ENGINEER
Feb 25, 2004

TC LL	30.0 PSF	REF	R487-- 84300
TC DL	7.0 PSF	DATE	02/25/04
BC DL	10.0 PSF	DRW	HCUSR487 04056078
BC LL	0.0 PSF	HC-ENG	JB/MMA *
TOT.LD.	47.0 PSF	SEQN-	44108
DUR.FAC.	1.33	FROM	JP
SPACING	24.0"	JREF-	1SAP487_Z04

(080 -- 080-SIMQUE HOMES / LOT 83 CALLOWAY - DGE)

TOP CHORD 2x4 SP #2 Dense
BOT CHORD 2x4 SP #2 Dense
WEBS 2x4 SP #3

SPECIAL LOADS
------(LUMBER DUR.FAC.=1.33 / PLATE DUR.FAC.=1.33)

TC - From	96 PLF	at -1.50	to	96 PLF	at 14.83
BC - From	4 PLF	at -1.50	to	4 PLF	at 0.00
BC - From	20 PLF	at 0.00	to	20 PLF	at 13.33
BC - From	4 PLF	at 13.33	to	4 PLF	at 14.83

110 MPH WIND, 9.92 FT MEAN HGT, ASCE 7-98, CLOSED BLDG, LOCATED ANYWHERE IN ROOF, CAT II, EXP B, WIND TCDL=5.0 PSF, WIND BCDL=5.0 PSF.

SEE DWGS A11015EC0901 & GBLLETIN1001 FOR MORE REQUIREMENTS.

DEFLECTION MEETS L/240 LIVE AND L/180 TOTAL LOAD.

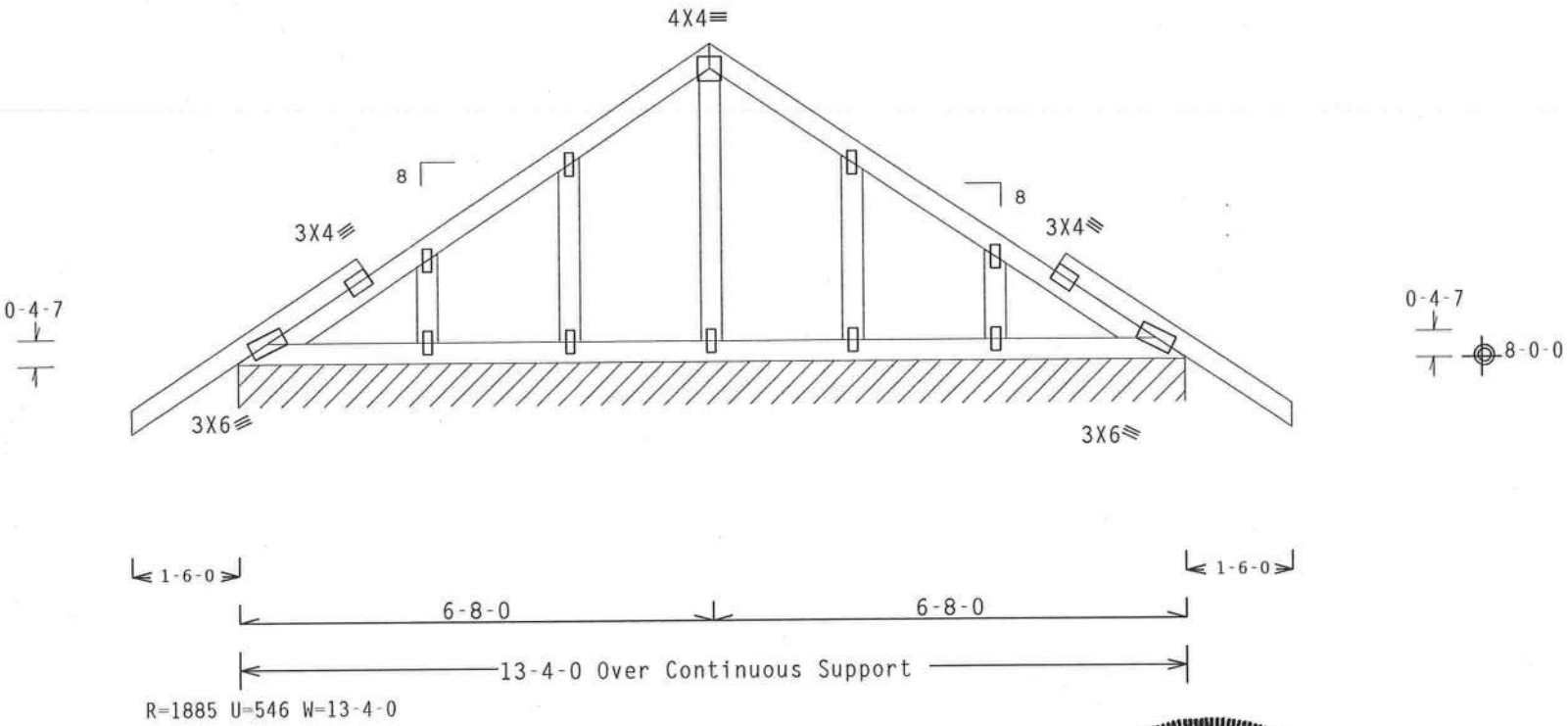

Note: All Plates Are W1.5X4 Except As Shown.

PLT TYP. Wave TPI95 Design Crit: TPI-1995 6.10 FL/-/4/-/-/R/- Scale =.375"/Ft.

ALPINE
Alpine Engineered Products, Inc.
1950 Marley Drive
Haines City, FL 33844
FL Certificate of Authorization # 567

WARNING TRUSSES REQUIRE EXTREME CARE IN FABRICATION, HANDLING, SHIPPING, INSTALLING AND BRACING. REFER TO BCSI 1-03 (BUILDING COMPONENT SAFETY INFORMATION), PUBLISHED BY TPI (TRUSS PLATE INSTITUTE, 583 D'ONOFRIO DR., SUITE 200, MADISON, WI 53719) AND WTCA (WOOD TRUSS COUNCIL OF AMERICA, 6300 ENTERPRISE LN, MADISON, WI 53719) FOR SAFETY PRACTICES PRIOR TO PERFORMING THESE FUNCTIONS. UNLESS OTHERWISE INDICATED, TOP CHORD SHALL HAVE PROPERLY ATTACHED STRUCTURAL PANELS AND BOTTOM CHORD SHALL HAVE A PROPERLY ATTACHED RIGID CEILING.

IMPORTANT FURNISH A COPY OF THIS DESIGN TO THE INSTALLATION CONTRACTOR. ALPINE ENGINEERED PRODUCTS, INC. SHALL NOT BE RESPONSIBLE FOR ANY DEVIATION FROM THIS DESIGN; ANY FAILURE TO BUILD THE TRUSS IN CONFORMANCE WITH TPI; OR FABRICATING, HANDLING, SHIPPING, INSTALLING & BRACING OF TRUSSES. DESIGN CONFORMS WITH APPLICABLE PROVISIONS OF NDS (NATIONAL DESIGN SPEC. BY AF&PA) AND TPI. ALPINE CONNECTOR PLATES ARE MADE OF 20/18/16GA (W,H/S/K) ASTM A653 GRADE 40/60 (W, K/H,S) GALV. STEEL. APPLY PLATES TO EACH FACE OF TRUSS AND, UNLESS OTHERWISE LOCATED ON THIS DESIGN, POSITION PER DRAWINGS 160A-Z. ANY INSPECTION OF PLATES FOLLOWED BY (1) SHALL BE PER ANNEX A3 OF TPI1-2002 SEC.3. A SEAL ON THIS DRAWING INDICATES ACCEPTANCE OF PROFESSIONAL ENGINEERING RESPONSIBILITY SOLELY FOR THE TRUSS COMPONENT DESIGN SHOWN. THE SUITABILITY AND USE OF THIS COMPONENT FOR ANY BUILDING IS THE RESPONSIBILITY OF THE BUILDING DESIGNER PER ANSI/TPI 1 SEC. 2.

MANUEL MARTINEZ CERTIFICATE No. 47182 STATE OF FLORIDA PROFESSIONAL ENGINEER
2-25-04

TC LL	30.0 PSF	REF R487-- 84301
TC DL	7.0 PSF	DATE 02/25/04
BC DL	10.0 PSF	DRW HCUSR487 04056067
BC LL	0.0 PSF	HC-ENG JB/MMA
TOT.LD.	47.0 PSF	SEQN- 44111
DUR.FAC.	1.33	FROM JP
SPACING	SEE ABOVE	JREF- 1SAP487_Z04

(080 -- 080-SIMQUE HOMES / LOT 83 CALLOWAY - D)

TOP CHORD 2x4 SP #2 Dense
BOT CHORD 2x4 SP #2 Dense
WEBS 2x4 SP #3

110 MPH WIND, 10.09 FT MEAN HGT, ASCE 7-98, CLOSED BLDG, LOCATED ANYWHERE IN ROOF, CAT II, EXP B, WIND TCDL=5.0 PSF, WIND BCDL=5.0 PSF.

DEFLECTION MEETS L/240 LIVE AND L/180 TOTAL LOAD.

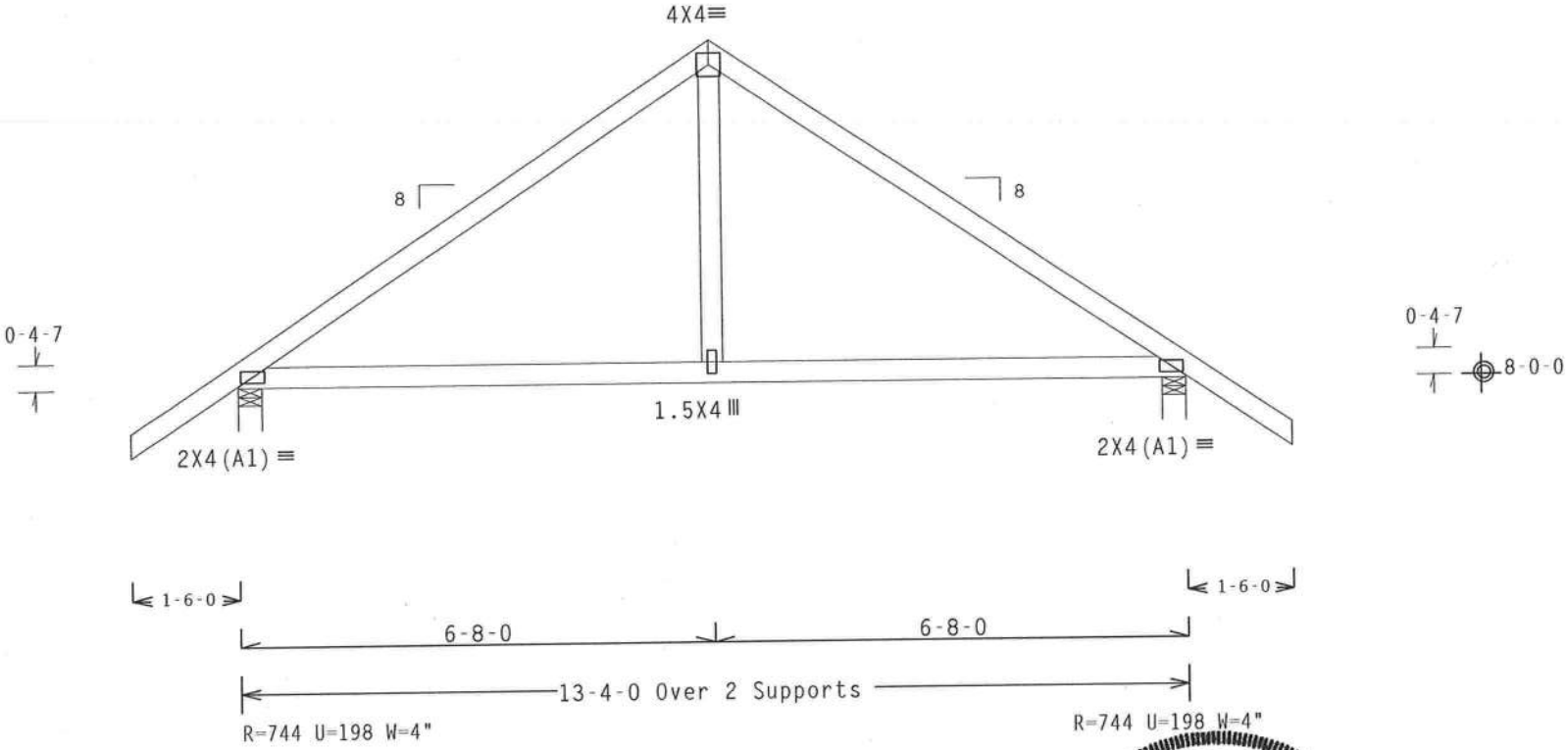

PLT TYP. Wave TPI95

Design Crit: TPI-1995

6.10

MANUEL MARTINEZ CERTIFICATE No. 47182 STATE OF FLORIDA PROFESSIONAL ENGINEER

FL/-/4/-/-/R/-

Scale =.375"/Ft.

TC LL	30.0 PSF	REF R487-- 84302
★TC DL	7.0 PSF	DATE 02/25/04
BC DL	10.0 PSF	DRW HCUSR487 04056068
BC LL	0.0 PSF	HC-ENG JB/MMA *
TOT.LD.	47.0 PSF	SEQN- 44113
DUR.FAC.	1.33	FROM JP
SPACING	24.0"	JREF- 1SAP487_Z04

ALPINE

Alpine Engineered Products, Inc.
1950 Marley Drive
Haines City, FL 33844

WARNING TRUSSES REQUIRE EXTREME CARE IN FABRICATION, HANDLING, SHIPPING, INSTALLING AND BRACING. REFER TO BCSI 1-03 (BUILDING COMPONENT SAFETY INFORMATION), PUBLISHED BY TPI (TRUSS PLATE INSTITUTE, 583 D'ONOFRIO DR., SUITE 200, MADISON, WI 53719) AND WTCA (WOOD TRUSS COUNCIL OF AMERICA, 6300 ENTERPRISE LN, MADISON, WI 53719) FOR SAFETY PRACTICES PRIOR TO PERFORMING THESE FUNCTIONS. UNLESS OTHERWISE INDICATED, TOP CHORD SHALL HAVE PROPERLY ATTACHED STRUCTURAL PANELS AND BOTTOM CHORD SHALL HAVE A PROPERLY ATTACHED RIGID CEILING.

IMPORTANT FURNISH A COPY OF THIS DESIGN TO THE INSTALLATION CONTRACTOR. ALPINE ENGINEERED PRODUCTS, INC. SHALL NOT BE RESPONSIBLE FOR ANY DEVIATION FROM THIS DESIGN; ANY FAILURE TO BUILD THE TRUSS IN CONFORMANCE WITH TPI; OR FABRICATING, HANDLING, SHIPPING, INSTALLING & BRACING OF TRUSSES. DESIGN CONFORMS WITH APPLICABLE PROVISIONS OF NDS (NATIONAL DESIGN SPEC. BY AF&PA) AND TPI. ALPINE CONNECTOR PLATES ARE MADE OF 20/18/16GA (W,H/S/K) ASTM A653 GRADE 40/60 (W, K/H,S) GALV. STEEL. APPLY PLATES TO EACH FACE OF TRUSS AND, UNLESS OTHERWISE LOCATED ON THIS DESIGN, POSITION PER DRAWINGS 160A-Z. ANY INSPECTION OF PLATES FOLLOWED BY (1) SHALL BE PER ANNEX A3 OF TPI1-2002 SEC.3. A SEAL ON THIS DRAWING INDICATES ACCEPTANCE OF PROFESSIONAL ENGINEERING RESPONSIBILITY SOLELY FOR THE TRUSS COMPONENT DESIGN SHOWN. THE SUITABILITY AND USE OF THIS COMPONENT FOR ANY BUILDING IS THE RESPONSIBILITY OF THE BUILDING DESIGNER PER ANSI/TPI 1 SEC. 2.

(080-SIMOUE HOMES / LOT 83 CALLOWAY - D-1)

Top chord 2x4 SP #2 Dense
Bot chord 2x6 SP #1 Dense
Webs 2x4 SP #3 :W5 2x4 SP #2 Dense:

SPECIAL LOADS
------(LUMBER DUR.FAC.=1.33 / PLATE DUR.FAC.=1.33)
TC - From 74 PLF at -1.50 to 74 PLF at 13.33
BC - From 4 PLF at -1.50 to 4 PLF at 0.00
BC - From 20 PLF at 0.00 to 20 PLF at 13.33
BC - 5185 LB Conc. Load at 7.13
BC - 1941 LB Conc. Load at 9.06, 11.06

Deflection meets L/240 live and L/180 total load.

2 COMPLETE TRUSSES REQUIRED

NAILING SCHEDULE: (12d_common_nails)
TOP CHORD: 1 ROW @ 12" o.c.
BOT CHORD: 2 ROWS @ 6" o.c. (EACH ROW)
WEBS : 1 ROW @ 4" o.c.
USE EQUAL SPACING BETWEEN ROWS AND STAGGER NAILS IN EACH ROW TO AVOID SPLITTING.

110 mph wind, 15.00 ft mean hgt, ASCE 7-98, CLOSED bldg, Located anywhere in roof, CAT II, EXP B, wind TC DL=5.0 psf, wind BC DL=5.0 psf.

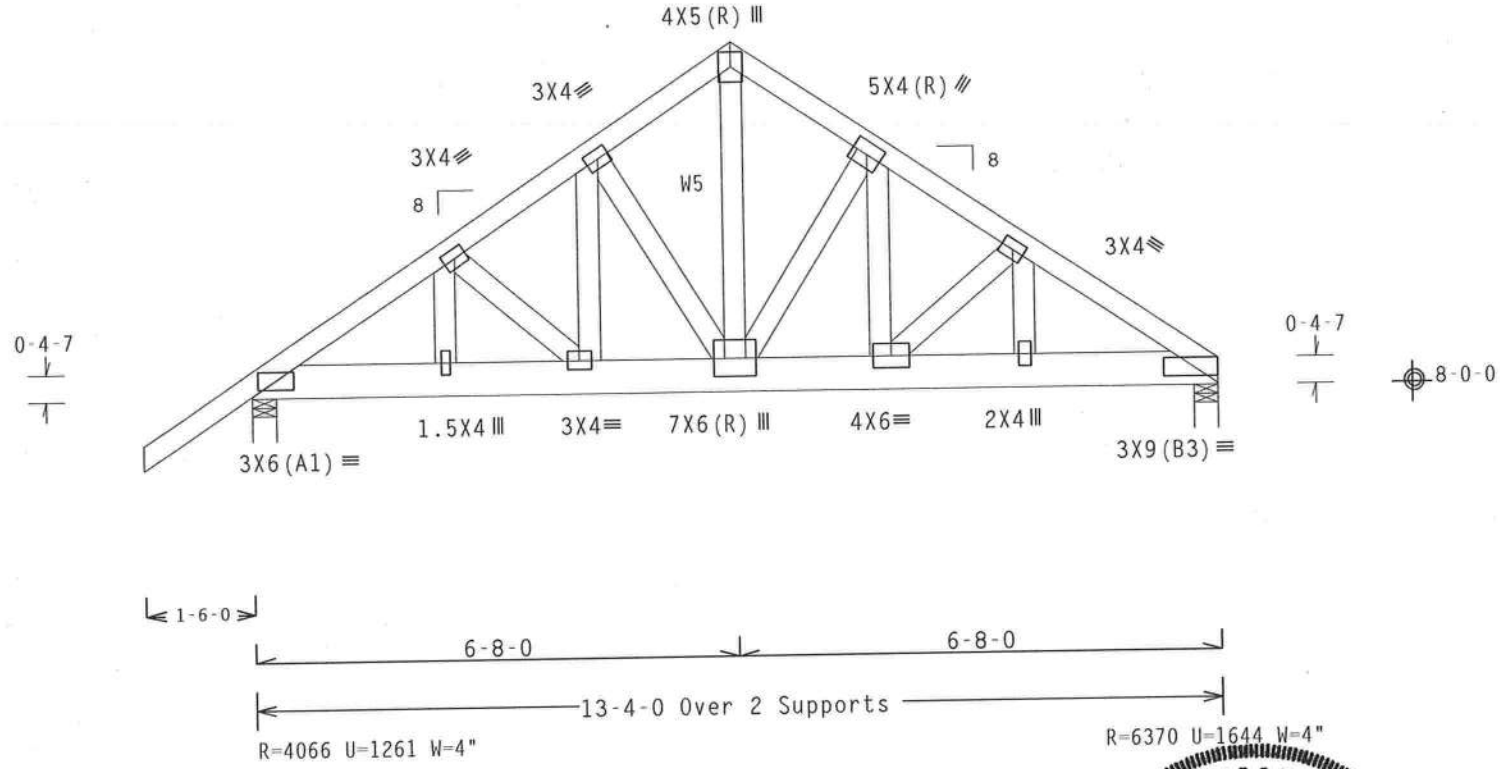

PLT TYP. Wave TPI

Design Crit: TPI-1995(STD) 6.10

ALPINE
Alpine Engineered Products, Inc.
1950 Marley Drive
Haines City, FL 33844

WARNING TRUSSES REQUIRE EXTREME CARE IN FABRICATION, HANDLING, SHIPPING, INSTALLING AND BRACING. REFER TO BCSI 1-03 (BUILDING COMPONENT SAFETY INFORMATION), PUBLISHED BY TPI (TRUSS PLATE INSTITUTE, 583 D'ONOFRIO DR., SUITE 200, MADISON, WI 53719) AND WTCA (WOOD TRUSS COUNCIL OF AMERICA, 6300 ENTERPRISE LN, MADISON, WI 53719) FOR SAFETY PRACTICES PRIOR TO PERFORMING THESE FUNCTIONS. UNLESS OTHERWISE INDICATED, TOP CHORD SHALL HAVE PROPERLY ATTACHED STRUCTURAL PANELS AND BOTTOM CHORD SHALL HAVE A PROPERLY ATTACHED RIGID CEILING.

IMPORTANT FURNISH A COPY OF THIS DESIGN TO THE INSTALLATION CONTRACTOR. ALPINE ENGINEERED PRODUCTS, INC. SHALL NOT BE RESPONSIBLE FOR ANY DEVIATION FROM THIS DESIGN; ANY FAILURE TO BUILD THE TRUSS IN CONFORMANCE WITH TPI; OR FABRICATING, HANDLING, SHIPPING, INSTALLING & BRACING OF TRUSSES. DESIGN CONFORMS WITH APPLICABLE PROVISIONS OF NDS (NATIONAL DESIGN SPEC. BY AF&PA) AND TPI. ALPINE CONNECTOR PLATES ARE MADE OF 20/18/16GA (W.H/S/X) ASTM A653 GRADE 40/60 (W. K/H.S) GALV. STEEL. APPLY PLATES TO EACH FACE OF TRUSS AND. UNLESS OTHERWISE LOCATED ON THIS DESIGN, POSITION PER DRAWINGS 160A-Z. ANY INSPECTION OF PLATES FOLLOWED BY (1) SHALL BE PER ANNEX A3 OF TPI1-2002 SEC.3. A SEAL ON THIS DRAWING INDICATES ACCEPTANCE OF PROFESSIONAL ENGINEERING RESPONSIBILITY SOLELY FOR THE TRUSS COMPONENT DESIGN SHOWN. THE SUITABILITY AND USE OF THIS COMPONENT FOR ANY BUILDING IS THE RESPONSIBILITY OF THE BUILDING DESIGNER PER ANSI/TPI 1 SEC. 2.

MANUEL MARTINEZ
CERTIFICATE No. 47182
STATE OF FLORIDA
PROFESSIONAL ENGINEER
FEB 05 2004

FL/-/4/-/-/R/- Scale =.375"/Ft.

TC LL	30.0 PSF	REF	R487-- 84303
★TC DL	7.0 PSF	DATE	02/25/04
BC DL	10.0 PSF	DRW	HCUSR487 04056113
BC LL	0.0 PSF	HC-ENG	JB/MMA
TOT.LD.	47.0 PSF	SEQN-	27538
DUR.FAC.	1.33	FROM	JP
SPACING	24.0"	JREF-	1SAP487_Z04

(080 -- 080-SIMQUE HOMES / LOT 83 CALLOWAY - E)

TOP CHORD 2x4 SP #2 Dense
BOT CHORD 2x4 SP #2 Dense
WEBS 2x4 SP #3

SPECIAL LOADS
------(LUMBER DUR.FAC.=1.33 / PLATE DUR.FAC.=1.33)

TC - From	96 PLF	at	-1.50	to	96 PLF	at	9.83
BC - From	4 PLF	at	-1.50	to	4 PLF	at	0.00
BC - From	20 PLF	at	0.00	to	20 PLF	at	8.33
BC - From	4 PLF	at	8.33	to	4 PLF	at	9.83

110 MPH WIND, 9.08 FT MEAN HGT, ASCE 7-98, CLOSED BLDG, LOCATED ANYWHERE IN ROOF, CAT II, EXP B, WIND TCDL=5.0 PSF, WIND BCDL=5.0 PSF.

SEE DWGS A11015EC0901 & GBLLETIN1001 FOR MORE REQUIREMENTS.

DEFLECTION MEETS L/240 LIVE AND L/180 TOTAL LOAD.

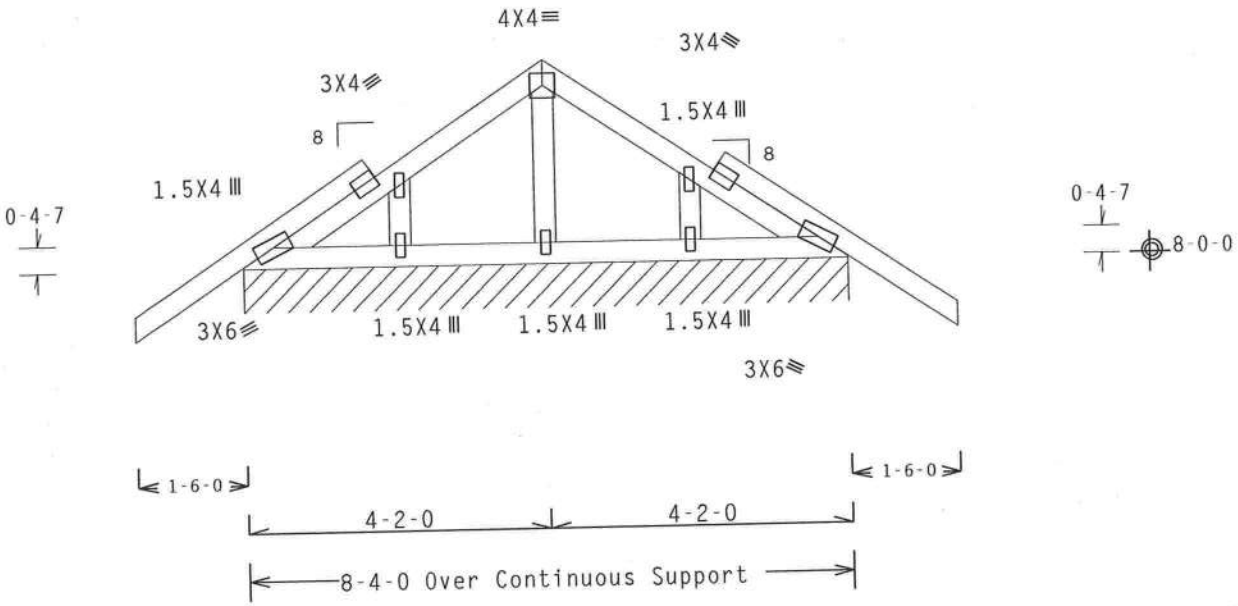

R=1266 U=383 W=8-4-0

PLT TYP. Wave TPI95 | Design Crit: TPI-1995 | 6.10 | FL/-/4/-/-/R/- | Scale =.375"/Ft.

ALPINE
Alpine Engineered Products, Inc.
1950 Marley Drive
Haines City, FL 33844

WARNING TRUSSES REQUIRE EXTREME CARE IN FABRICATION, HANDLING, SHIPPING, INSTALLING AND BRACING. REFER TO BCSI 1-03 (BUILDING COMPONENT SAFETY INFORMATION). PUBLISHED BY TPI (TRUSS PLATE INSTITUTE, 583 D'ONOFRIO DR., SUITE 200, MADISON, WI 53719) AND WTCA (WOOD TRUSS COUNCIL OF AMERICA, 6300 ENTERPRISE LN, MADISON, WI 53719) FOR SAFETY PRACTICES PRIOR TO PERFORMING THESE FUNCTIONS. UNLESS OTHERWISE INDICATED, TOP CHORD SHALL HAVE PROPERLY ATTACHED STRUCTURAL PANELS AND BOTTOM CHORD SHALL HAVE A PROPERLY ATTACHED RIGID CEILING.

IMPORTANT FURNISH A COPY OF THIS DESIGN TO THE INSTALLATION CONTRACTOR. ALPINE ENGINEERED PRODUCTS, INC. SHALL NOT BE RESPONSIBLE FOR ANY DEVIATION FROM THIS DESIGN; ANY FAILURE TO BUILD THE TRUSS IN CONFORMANCE WITH TPI; OR FABRICATING, HANDLING, SHIPPING, INSTALLING & BRACING OF TRUSSES. DESIGN CONFORMS WITH APPLICABLE PROVISIONS OF NDS (NATIONAL DESIGN SPEC, BY AF&PA) AND TPI. ALPINE CONNECTOR PLATES ARE MADE OF 20/18/16GA (W,H/S/K) ASTM A653 GRADE 40/60 (W, K/H,S) GALV. STEEL. APPLY PLATES TO EACH FACE OF TRUSS AND, UNLESS OTHERWISE LOCATED ON THIS DESIGN, POSITION PER DRAWINGS 160A-Z. ANY INSPECTION OF PLATES FOLLOWED BY (1) SHALL BE PER ANNEX A3 OF TPI1-2002 SEC.3. A SEAL ON THIS DRAWING INDICATES ACCEPTANCE OF PROFESSIONAL ENGINEERING RESPONSIBILITY SOLELY FOR THE TRUSS COMPONENT DESIGN SHOWN. THE SUITABILITY AND USE OF THIS COMPONENT FOR ANY BUILDING IS THE RESPONSIBILITY OF THE BUILDING DESIGNER PER ANSI/TPI 1 SEC. 2.

MANUEL MARTINEZ
CERTIFICATE
No. 47182
STATE OF FLORIDA
PROFESSIONAL ENGINEER
Feb 25, 04

TC LL	30.0 PSF	REF	R487-- 84304
TC DL	7.0 PSF	DATE	02/25/04
BC DL	10.0 PSF	DRW	HCUSR487 04056083
BC LL	0.0 PSF	HC-ENG	JB/MMA
TOT.LD.	47.0 PSF	SEQN-	44093
DUR.FAC.	1.33	FROM	JP
SPACING	SEE ABOVE	JREF-	1SAP487_Z04

(080 -- 080-SIMQUE HOMES / LOT 83 CALLOWAY - EJ5)

TOP CHORD 2x4 SP #2 Dense
BOT CHORD 2x4 SP #2 Dense

DEFLECTION MEETS L/240 LIVE AND L/180 TOTAL LOAD.

110 MPH WIND, 9.54 FT MEAN HGT, ASCE 7-98, CLOSED BLDG, LOCATED ANYWHERE IN ROOF, CAT II, EXP B, WIND TCDL=5.0 PSF, WIND BCDL=5.0 PSF.

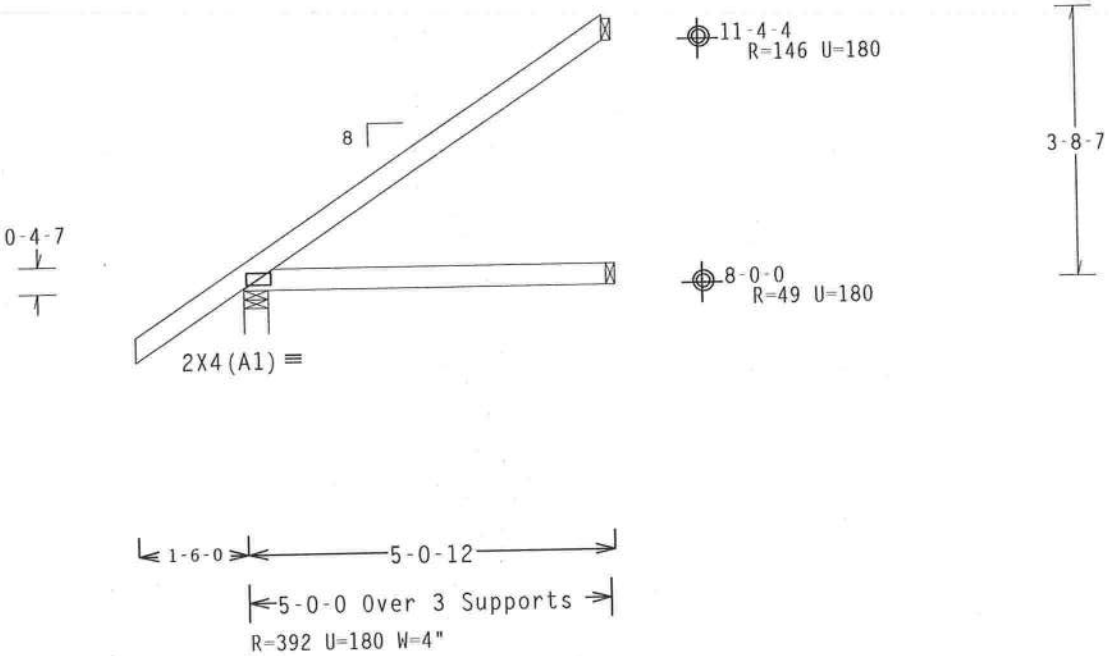

PLT TYP. Wave TPI95 Design Crit: TPI-1995 6.10

WARNING TRUSSES REQUIRE EXTREME CARE IN FABRICATION, HANDLING, SHIPPING, INSTALLING AND BRACING. REFER TO BCSI 1-03 (BUILDING COMPONENT SAFETY INFORMATION), PUBLISHED BY TPI (TRUSS PLATE INSTITUTE, 583 D'ONOFRIO DR., SUITE 200, MADISON, WI 53719) AND WTCA (WOOD TRUSS COUNCIL OF AMERICA, 6300 ENTERPRISE LN, MADISON, WI 53719) FOR SAFETY PRACTICES PRIOR TO PERFORMING THESE FUNCTIONS. UNLESS OTHERWISE INDICATED, TOP CHORD SHALL HAVE PROPERLY ATTACHED STRUCTURAL PANELS AND BOTTOM CHORD SHALL HAVE A PROPERLY ATTACHED RIGID CEILING.

IMPORTANT FURNISH A COPY OF THIS DESIGN TO THE INSTALLATION CONTRACTOR. ALPINE ENGINEERED PRODUCTS, INC. SHALL NOT BE RESPONSIBLE FOR ANY DEVIATION FROM THIS DESIGN; ANY FAILURE TO BUILD THE TRUSS IN CONFORMANCE WITH TPI; OR FABRICATING, HANDLING, SHIPPING, INSTALLING & BRACING OF TRUSSES. DESIGN CONFORMS WITH APPLICABLE PROVISIONS OF NDS (NATIONAL DESIGN SPEC. BY AF&PA) AND TPI. ALPINE CONNECTOR PLATES ARE MADE OF 20/18/16GA (W,H/S/K) ASTM A653 GRADE 40/60 (W, K/H,S) GALV. STEEL. APPLY PLATES TO EACH FACE OF TRUSS AND, UNLESS OTHERWISE LOCATED ON THIS DESIGN, POSITION PER DRAWINGS 160A-2. ANY INSPECTION OF PLATES FOLLOWED BY (1) SHALL BE PER ANNEX A3 OF TPI1-2002 SEC.3. A SEAL ON THIS DRAWING INDICATES ACCEPTANCE OF PROFESSIONAL ENGINEERING RESPONSIBILITY SOLELY FOR THE TRUSS COMPONENT DESIGN SHOWN. THE SUITABILITY AND USE OF THIS COMPONENT FOR ANY BUILDING IS THE RESPONSIBILITY OF THE BUILDING DESIGNER PER ANSI/TPI-1 SEC. 2.

ALPINE
Alpine Engineered Products, Inc.
1950 Marley Drive
Haines City, FL 33844

MANUEL MARTINEZ CERTIFICATE No. 47182 STATE OF FLORIDA PROFESSIONAL ENGINEER
Feb 05, 04

FL/-/4/-/-/R/- Scale =.375"/Ft.

TC LL	30.0 PSF	REF R487-- 84305
TC DL	7.0 PSF	DATE 02/25/04
BC DL	10.0 PSF	DRW HCUSR487 04056081
BC LL	0.0 PSF	HC-ENG JB/MMA
TOT.LD.	47.0 PSF	SEQN- 44149
DUR.FAC.	1.33	FROM JP
SPACING	24.0"	JREF- 1SAP487_Z04

(080 -- 080-SIMQUE HOMES / LOT 83 CALLOWAY - EJ7)

TOP CHORD 2x4 SP #2 Dense
BOT CHORD 2x4 SP #2 Dense

DEFLECTION MEETS L/240 LIVE AND L/180 TOTAL LOAD.

110 MPH WIND, 10.20 FT MEAN HGT, ASCE 7-98, CLOSED BLDG, NOT LOCATED WITHIN 4.50 FT FROM ROOF EDGE, CAT II, EXP B, WIND TCDL=5.0 PSF, WIND BCDL=5.0 PSF.

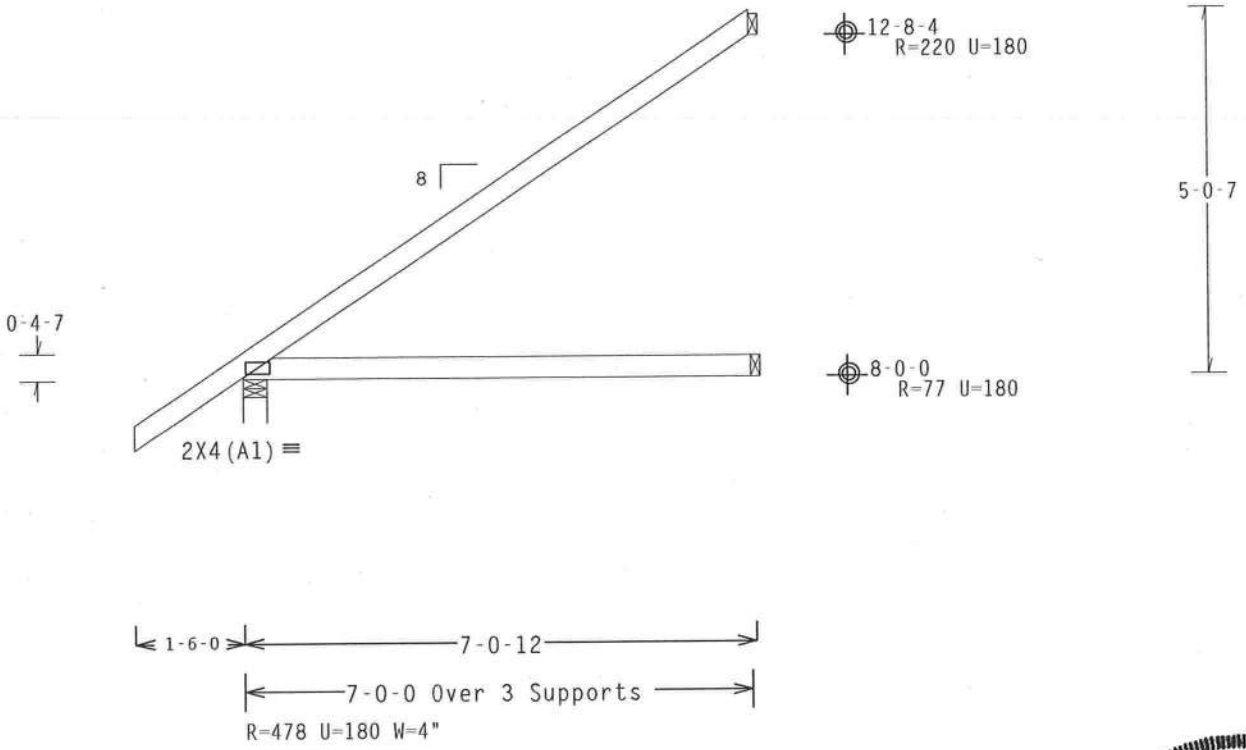

PLT TYP. Wave TPI95 | Design Crit: TPI-1995 | 6.10 | FL/-/4/-/-/R/- | Scale =.375"/Ft.

ALPINE
Alpine Engineered Products, Inc.
1950 Marley Drive
Haines City, FL 33844
FL Certificate of Authorization # 567

WARNING TRUSSES REQUIRE EXTREME CARE IN FABRICATION, HANDLING, SHIPPING, INSTALLING AND BRACING. REFER TO BCSI 1-03 (BUILDING COMPONENT SAFETY INFORMATION), PUBLISHED BY TPI (TRUSS PLATE INSTITUTE, 583 D'ONOFRIO DR., SUITE 200, MADISON, WI 53719) AND WTCA (WOOD TRUSS COUNCIL OF AMERICA, 6300 ENTERPRISE LN, MADISON, WI 53719) FOR SAFETY PRACTICES PRIOR TO PERFORMING THESE FUNCTIONS. UNLESS OTHERWISE INDICATED, TOP CHORD SHALL HAVE PROPERLY ATTACHED STRUCTURAL PANELS AND BOTTOM CHORD SHALL HAVE A PROPERLY ATTACHED RIGID CEILING.

IMPORTANT FURNISH A COPY OF THIS DESIGN TO THE INSTALLATION CONTRACTOR. ALPINE ENGINEERED PRODUCTS, INC. SHALL NOT BE RESPONSIBLE FOR ANY DEVIATION FROM THIS DESIGN; ANY FAILURE TO BUILD THE TRUSS IN CONFORMANCE WITH TPI; OR FABRICATING, HANDLING, SHIPPING, INSTALLING & BRACING OF TRUSSES. DESIGN CONFORMS WITH APPLICABLE PROVISIONS OF NDS (NATIONAL DESIGN SPEC, BY AF&PA) AND TPI. ALPINE CONNECTOR PLATES ARE MADE OF 20/18/16GA (W,H/S/K) ASTM A653 GRADE 40/60 (H, K/H,S) GALV. STEEL. APPLY PLATES TO EACH FACE OF TRUSS AND, UNLESS OTHERWISE LOCATED ON THIS DESIGN, POSITION PER DRAWINGS 160A-Z. ANY INSPECTION OF PLATES FOLLOWED BY (1) SHALL BE PER ANNEX A3 OF TPI1-2002 SEC.3. A SEAL ON THIS DRAWING INDICATES ACCEPTANCE OF PROFESSIONAL ENGINEERING RESPONSIBILITY SOLELY FOR THE TRUSS COMPONENT DESIGN SHOWN. THE SUITABILITY AND USE OF THIS COMPONENT FOR ANY BUILDING IS THE RESPONSIBILITY OF THE BUILDING DESIGNER PER ANSI/TPI 1 SEC. 2.

MANUEL MARTINEZ
CERTIFICATE
No. 47182
STATE OF FLORIDA
PROFESSIONAL ENGINEER
Feb 25, 04

TC	LL	30.0 PSF	REF R487-- 84306
TC	DL	7.0 PSF	DATE 02/25/04
BC	DL	10.0 PSF	DRW HCUSR487 04056077
BC	LL	0.0 PSF	HC-ENG JB/MMA
TOT.LD.		47.0 PSF	SEQN- 44118
DUR.FAC.		1.33	FROM JP
SPACING		24.0"	JREF- 1SAP487_Z04

(080 -- 080-SIMQUE HOMES / LOT 83 CALLOWAY - EJ7D)

TOP CHORD 2x4 SP #2 Dense
BOT CHORD 2x4 SP #2 Dense
WEBS 2x4 SP #3

DEFLECTION MEETS L/240 LIVE AND L/180 TOTAL LOAD.

110 MPH WIND, 10.09 FT MEAN HGT, ASCE 7-98, CLOSED BLDG, NOT LOCATED WITHIN 4.50 FT FROM ROOF EDGE, CAT II, EXP B, WIND TCDL=5.0 PSF, WIND BCDL=5.0 PSF.

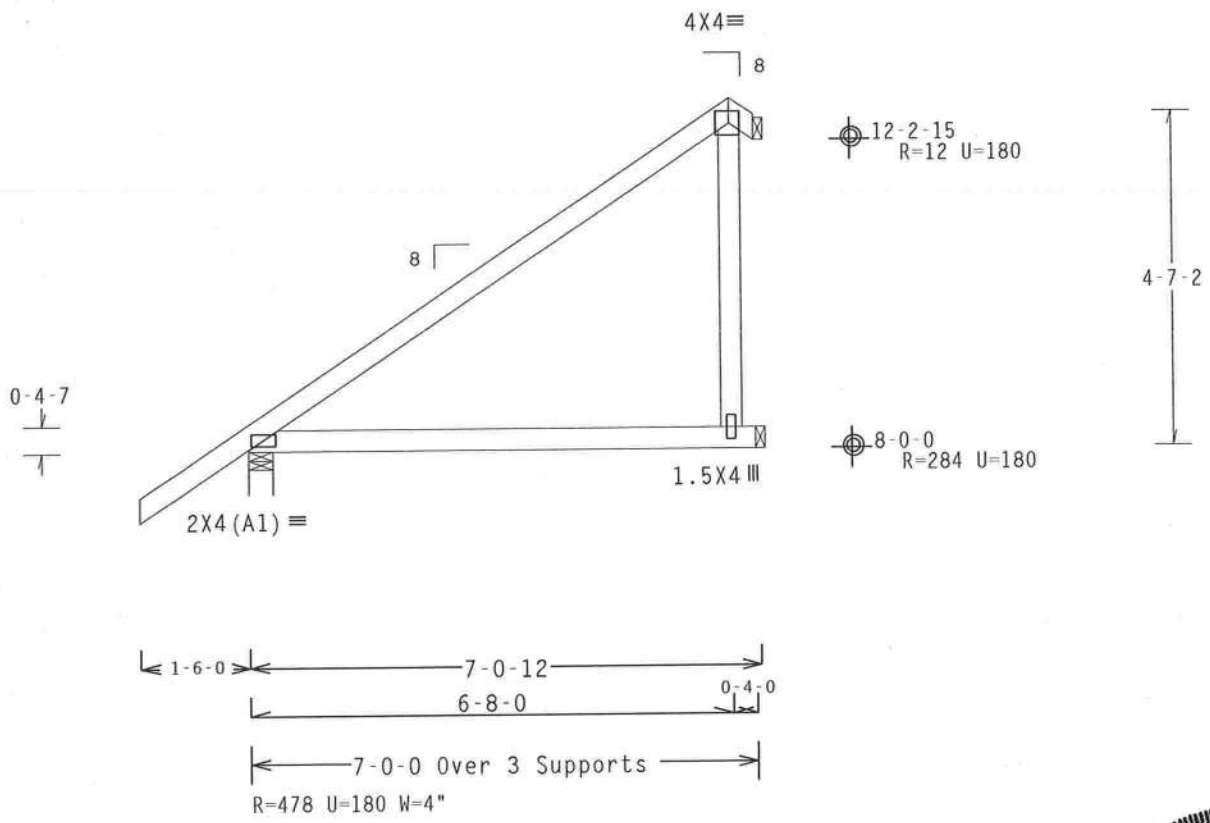

PLT TYP. Wave TPI95 | Design Crit: TPI-1995 | 6.10

WARNING TRUSSES REQUIRE EXTREME CARE IN FABRICATION, HANDLING, SHIPPING, INSTALLING AND BRACING. REFER TO BCSI 1-03 (BUILDING COMPONENT SAFETY INFORMATION), PUBLISHED BY TPI (TRUSS PLATE INSTITUTE, 583 D'ONOFRIO DR., SUITE 200, MADISON, WI 53719) AND WTCA (WOOD TRUSS COUNCIL OF AMERICA, 6300 ENTERPRISE LN, MADISON, WI 53719) FOR SAFETY PRACTICES PRIOR TO PERFORMING THESE FUNCTIONS. UNLESS OTHERWISE INDICATED, TOP CHORD SHALL HAVE PROPERLY ATTACHED STRUCTURAL PANELS AND BOTTOM CHORD SHALL HAVE A PROPERLY ATTACHED RIGID CEILING.

IMPORTANT FURNISH A COPY OF THIS DESIGN TO THE INSTALLATION CONTRACTOR. ALPINE ENGINEERED PRODUCTS, INC. SHALL NOT BE RESPONSIBLE FOR ANY DEVIATION FROM THIS DESIGN; ANY FAILURE TO BUILD THE TRUSS IN CONFORMANCE WITH TPI; OR FABRICATING, HANDLING, SHIPPING, INSTALLING & BRACING OF TRUSSES. DESIGN CONFORMS WITH APPLICABLE PROVISIONS OF NDS (NATIONAL DESIGN SPEC, BY AF&PA) AND TPI. ALPINE CONNECTOR PLATES ARE MADE OF 20/18/16GA (W,H/S/K) ASTM A653 GRADE 40/60 (W, K/H,S) GALV. STEEL. APPLY PLATES TO EACH FACE OF TRUSS AND, UNLESS OTHERWISE LOCATED ON THIS DESIGN, POSITION PER DRAWINGS 160A-Z. ANY INSPECTION OF PLATES FOLLOWED BY (1) SHALL BE PER ANNEX A3 OF TPI1-2002 SEC.3. A SEAL ON THIS DRAWING INDICATES ACCEPTANCE OF PROFESSIONAL ENGINEERING RESPONSIBILITY SOLELY FOR THE TRUSS COMPONENT DESIGN SHOWN. THE SUITABILITY AND USE OF THIS COMPONENT FOR ANY BUILDING IS THE RESPONSIBILITY OF THE BUILDING DESIGNER PER ANSI/TPI 1 SEC. 2.

ALPINE
Alpine Engineered Products, Inc.
1950 Marley Drive
Haines City, FL 33844
FL Certificate of Authorization # 567

MANUEL MARTINEZ CERTIFICATE No. 47182 STATE OF FLORIDA PROFESSIONAL ENGINEER
Feb 25, 04

FL/-/4/-/-/R/- Scale =.375"/Ft.

TC	LL	30.0 PSF	REF R487-- 84307
TC	DL	7.0 PSF	DATE 02/25/04
BC	DL	10.0 PSF	DRW HCUSR487 04056073
BC	LL	0.0 PSF	HC-ENG JB/MMA
TOT.LD.		47.0 PSF	SEQN- 44122
DUR.FAC.		1.33	FROM JP
SPACING		24.0"	JREF- 1SAP487_Z04

(080 -- 080-SIMQUE HOMES / LOT 83 CALLOWAY - EJ74)

TOP CHORD 2x4 SP #2 Dense
BOT CHORD 2x4 SP #2 Dense

DEFLECTION MEETS L/240 LIVE AND L/180 TOTAL LOAD.

110 MPH WIND, 10.16 FT MEAN HGT, ASCE 7-98, CLOSED BLDG, NOT LOCATED WITHIN 4.50 FT FROM ROOF EDGE, CAT II, EXP B, WIND TCDL=5.0 PSF, WIND BCDL=5.0 PSF.

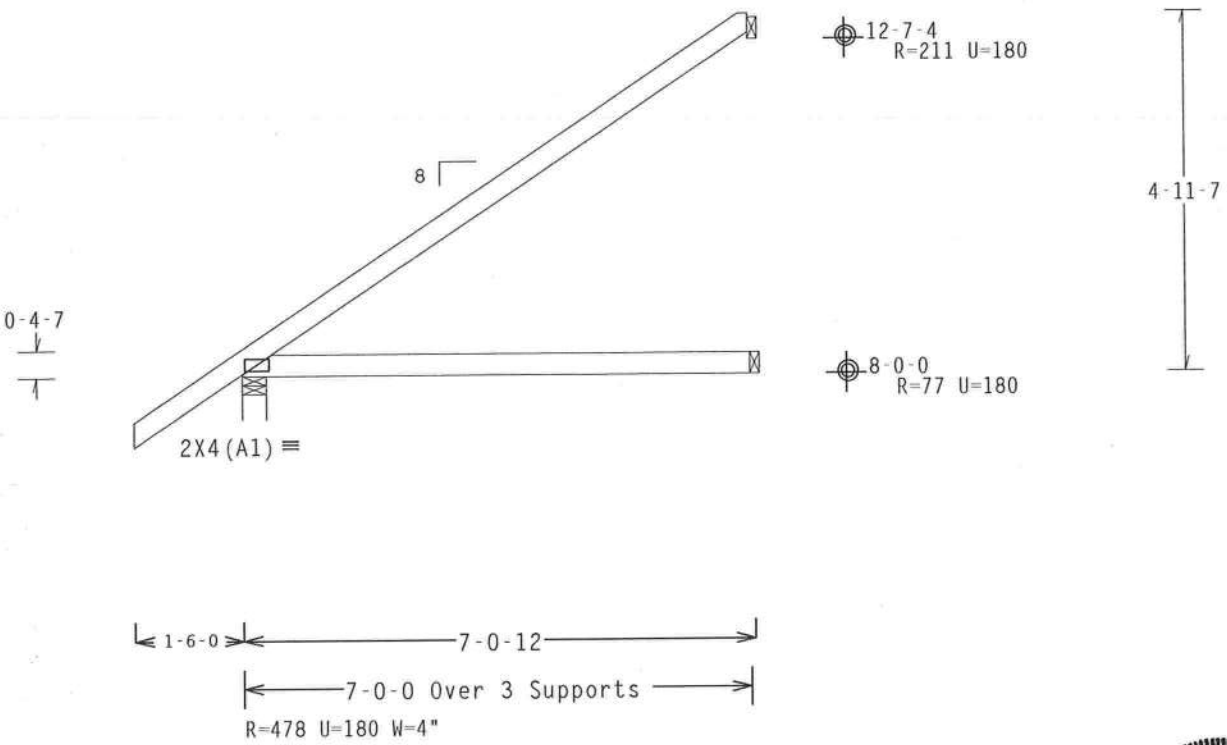

PLT TYP. Wave TPI95 | Design Crit: TPI-1995 | 6.10 | FL/-/4/-/-/R/- | Scale =.375"/Ft.

ALPINE
Alpine Engineered Products, Inc.
1950 Marley Drive
Haines City, FL 33844
FL Certificate of Authorization # 567

WARNING TRUSSES REQUIRE EXTREME CARE IN FABRICATION, HANDLING, SHIPPING, INSTALLING AND BRACING. REFER TO BCSI 1-03 (BUILDING COMPONENT SAFETY INFORMATION), PUBLISHED BY TPI (TRUSS PLATE INSTITUTE, 583 D'ONOFRIO DR., SUITE 200, MADISON, WI 53719) AND WTCA (WOOD TRUSS COUNCIL OF AMERICA, 6300 ENTERPRISE LN, MADISON, WI 53719) FOR SAFETY PRACTICES PRIOR TO PERFORMING THESE FUNCTIONS. UNLESS OTHERWISE INDICATED, TOP CHORD SHALL HAVE PROPERLY ATTACHED STRUCTURAL PANELS AND BOTTOM CHORD SHALL HAVE A PROPERLY ATTACHED RIGID CEILING.

IMPORTANT FURNISH A COPY OF THIS DESIGN TO THE INSTALLATION CONTRACTOR. ALPINE ENGINEERED PRODUCTS, INC. SHALL NOT BE RESPONSIBLE FOR ANY DEVIATION FROM THIS DESIGN; ANY FAILURE TO BUILD THE TRUSS IN CONFORMANCE WITH TPI; OR FABRICATING, HANDLING, SHIPPING, INSTALLING & BRACING OF TRUSSES. DESIGN CONFORMS WITH APPLICABLE PROVISIONS OF NDS (NATIONAL DESIGN SPEC, BY AF&PA) AND TPI. ALPINE CONNECTOR PLATES ARE MADE OF 20/18/16GA (W,H/S/K) ASTM A653 GRADE 40/60 (W, K/H,S) GALV. STEEL. APPLY PLATES TO EACH FACE OF TRUSS AND, UNLESS OTHERWISE LOCATED ON THIS DESIGN, POSITION PER DRAWINGS 160A-Z. ANY INSPECTION OF PLATES FOLLOWED BY (1) SHALL BE PER ANNEX A3 OF TPI1-2002 SEC.3. A SEAL ON THIS DRAWING INDICATES ACCEPTANCE OF PROFESSIONAL ENGINEERING RESPONSIBILITY SOLELY FOR THE TRUSS COMPONENT DESIGN SHOWN. THE SUITABILITY AND USE OF THIS COMPONENT FOR ANY BUILDING IS THE RESPONSIBILITY OF THE BUILDING DESIGNER PER ANSI/TPI 1 SEC. 2.

MANUEL MARTINEZ
CERTIFICATE
No. 47182
STATE OF FLORIDA
PROFESSIONAL ENGINEER
2-25-04

TC LL	30.0 PSF	REF R487-- 84308
TC DL	7.0 PSF	DATE 02/25/04
BC DL	10.0 PSF	DRW HCUSR487 04056076
BC LL	0.0 PSF	HC-ENG JB/MMA
TOT.LD.	47.0 PSF	SEQN- 44124
DUR.FAC.	1.33	FROM JP
SPACING	24.0"	JREF- 1SAP487_Z04

TOP CHORD 2x4 SP #2 Dense
BOT CHORD 2x4 SP #2 Dense
WEBS 2x4 SP #3

110 MPH WIND, 9.50 FT MEAN HGT, ASCE 7-98, CLOSED BLDG, LOCATED ANYWHERE IN ROOF, CAT II, EXP B, WIND TCDL=5.0 PSF, WIND BCDL=5.0 PSF.

DEFLECTION MEETS L/240 LIVE AND L/180 TOTAL LOAD.

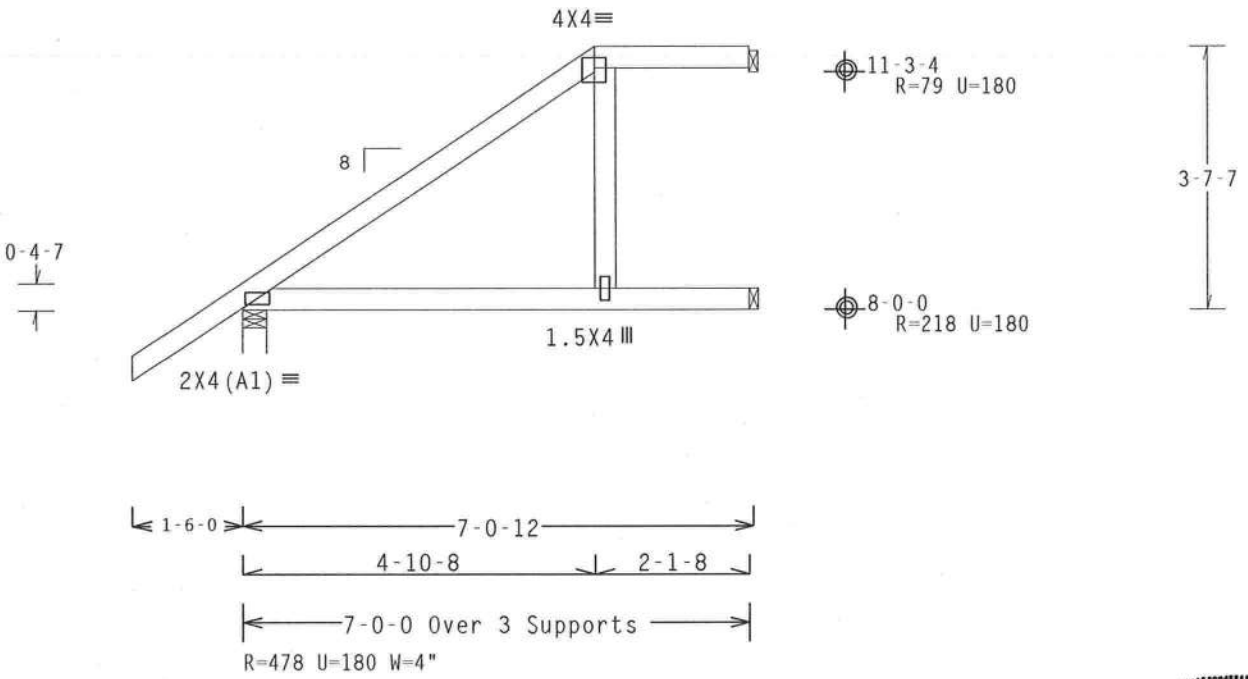

PLT TYP. Wave TPI95 | Design Crit: TPI-1995 | 6.10 | FL/-/4/-/-/R/- | Scale =.375"/Ft.

ALPINE
Alpine Engineered Products, Inc.
1950 Marley Drive
Haines City, FL 33844
FL Certificate of Authorization # 567

WARNING TRUSSES REQUIRE EXTREME CARE IN FABRICATION, HANDLING, SHIPPING, INSTALLING AND BRACING. REFER TO BCSI 1-03 (BUILDING COMPONENT SAFETY INFORMATION), PUBLISHED BY TPI (TRUSS PLATE INSTITUTE, 583 D'ONOFRIO DR., SUITE 200, MADISON, WI 53719) AND WTCA (WOOD TRUSS COUNCIL OF AMERICA, 6300 ENTERPRISE LN, MADISON, WI 53719) FOR SAFETY PRACTICES PRIOR TO PERFORMING THESE FUNCTIONS. UNLESS OTHERWISE INDICATED, TOP CHORD SHALL HAVE PROPERLY ATTACHED STRUCTURAL PANELS AND BOTTOM CHORD SHALL HAVE A PROPERLY ATTACHED RIGID CEILING.

IMPORTANT FURNISH A COPY OF THIS DESIGN TO THE INSTALLATION CONTRACTOR. ALPINE ENGINEERED PRODUCTS, INC. SHALL NOT BE RESPONSIBLE FOR ANY DEVIATION FROM THIS DESIGN; ANY FAILURE TO BUILD THE TRUSS IN CONFORMANCE WITH TPI; OR FABRICATING, HANDLING, SHIPPING, INSTALLING & BRACING OF TRUSSES. DESIGN CONFORMS WITH APPLICABLE PROVISIONS OF NDS (NATIONAL DESIGN SPEC. BY AF&PA) AND TPI. ALPINE CONNECTOR PLATES ARE MADE OF 20/18/16GA (W,H/S/K) ASTM A653 GRADE 40/60 (W, K/H,S) GALV. STEEL. APPLY PLATES TO EACH FACE OF TRUSS AND, UNLESS OTHERWISE LOCATED ON THIS DESIGN, POSITION PER DRAWINGS 160A-Z. ANY INSPECTION OF PLATES FOLLOWED BY (I) SHALL BE PER ANNEX A3 OF TPI1-2002 SEC.3. A SEAL ON THIS DRAWING INDICATES ACCEPTANCE OF PROFESSIONAL ENGINEERING RESPONSIBILITY SOLELY FOR THE TRUSS COMPONENT DESIGN SHOWN. THE SUITABILITY AND USE OF THIS COMPONENT FOR ANY BUILDING IS THE RESPONSIBILITY OF THE BUILDING DESIGNER PER ANSI/TPI 1 SEC. 2.

MANUEL MARTINEZ CERTIFICATE No. 47182 STATE OF FLORIDA PROFESSIONAL ENGINEER
Feb 25, 04

TC LL	30.0 PSF	REF R487-- 84309
TC DL	7.0 PSF	DATE 02/25/04
BC DL	10.0 PSF	DRW HCUSR487 04056075
BC LL	0.0 PSF	HC-ENG JB/MMA
TOT.LD.	47.0 PSF	SEQN- 44126
DUR.FAC.	1.33	FROM JP
SPACING	24.0"	JREF- 1SAP487_Z04

(080 -- 080-SIMQUE HOMES / LOT 83 CALLOWAY - EJ72)

TOP CHORD 2x4 SP #2 Dense
BOT CHORD 2x4 SP #2 Dense
WEBS 2x4 SP #3

SPECIAL LOADS
------(LUMBER DUR.FAC.=1.33 / PLATE DUR.FAC.=1.33)

TC - From	96 PLF	at -1.50	to	96 PLF	at 7.00
BC - From	4 PLF	at -1.50	to	4 PLF	at 0.00
BC - From	20 PLF	at 0.00	to	20 PLF	at 7.00

110 MPH WIND, 8.70 FT MEAN HGT, ASCE 7-98, CLOSED BLDG, LOCATED ANYWHERE IN ROOF, CAT II, EXP B, WIND TCDL=5.0 PSF, WIND BCDL=5.0 PSF.

RIGHT END VERTICAL NOT EXPOSED TO WIND PRESSURE.

Deflection meets L/240 live and L/180 total load. Creep increase factor for dead load is 1.00.

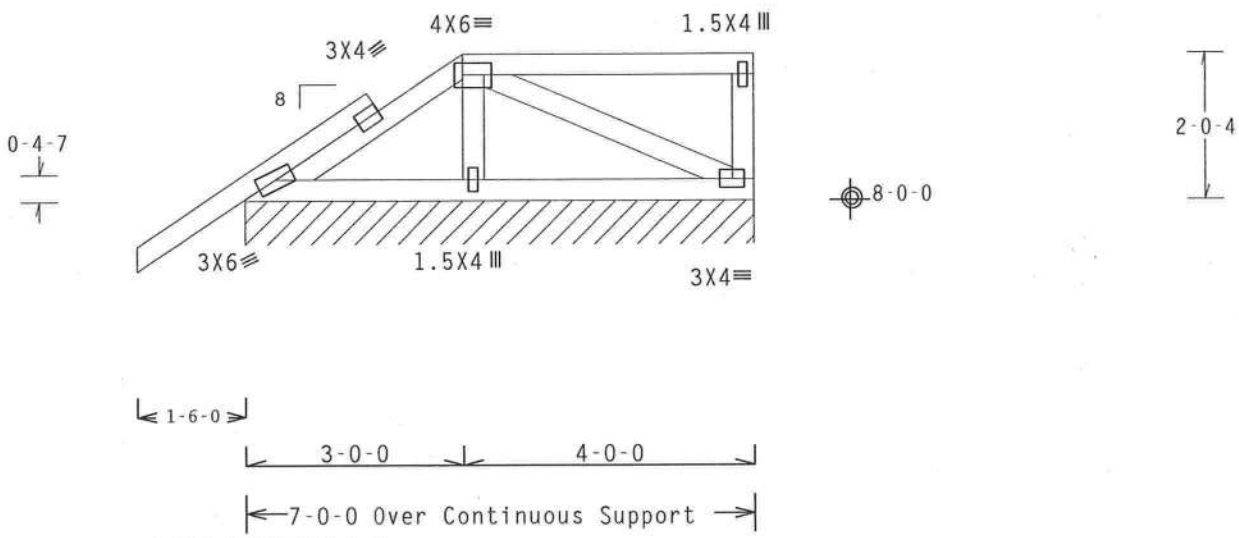

R=959 U=280 W=7-0-0

PLT TYP. Wave TPI95 | Design Crit: TPI-1995 | 6.10 | FL/-/4/-/-/R/- | Scale =.375"/Ft.

ALPINE
Alpine Engineered Products, Inc.
1950 Marley Drive
Haines City, FL 33844
FL Certificate of Authorization # 567

WARNING TRUSSES REQUIRE EXTREME CARE IN FABRICATION, HANDLING, SHIPPING, INSTALLING AND BRACING. REFER TO BCSI 1-03 (BUILDING COMPONENT SAFETY INFORMATION), PUBLISHED BY TPI (TRUSS PLATE INSTITUTE, 583 D'ONOFRIO DR., SUITE 200, MADISON, WI 53719) AND WICA (WOOD TRUSS COUNCIL OF AMERICA, 6300 ENTERPRISE LN, MADISON, WI 53719) FOR SAFETY PRACTICES PRIOR TO PERFORMING THESE FUNCTIONS. UNLESS OTHERWISE INDICATED, TOP CHORD SHALL HAVE PROPERLY ATTACHED STRUCTURAL PANELS AND BOTTOM CHORD SHALL HAVE A PROPERLY ATTACHED RIGID CEILING.

IMPORTANT FURNISH A COPY OF THIS DESIGN TO THE INSTALLATION CONTRACTOR. ALPINE ENGINEERED PRODUCTS, INC. SHALL NOT BE RESPONSIBLE FOR ANY DEVIATION FROM THIS DESIGN; ANY FAILURE TO BUILD THE TRUSS IN CONFORMANCE WITH TPI; OR FABRICATING, HANDLING, SHIPPING, INSTALLING & BRACING OF TRUSSES. DESIGN CONFORMS WITH APPLICABLE PROVISIONS OF NDS (NATIONAL DESIGN SPEC. BY AF&PA) AND TPI. ALPINE CONNECTOR PLATES ARE MADE OF 20/18/16GA (W,H/S/K) ASTM A653 GRADE 40/60 (W, K/H,S) GALV. STEEL. APPLY PLATES TO EACH FACE OF TRUSS AND, UNLESS OTHERWISE LOCATED ON THIS DESIGN, POSITION PER DRAWINGS 160A-Z. ANY INSPECTION OF PLATES FOLLOWED BY (1) SHALL BE PER ANNEX A3 OF TPI1-2002 SEC.3. A SEAL ON THIS DRAWING INDICATES ACCEPTANCE OF PROFESSIONAL ENGINEERING RESPONSIBILITY SOLELY FOR THE TRUSS COMPONENT DESIGN SHOWN. THE SUITABILITY AND USE OF THIS COMPONENT FOR ANY BUILDING IS THE RESPONSIBILITY OF THE BUILDING DESIGNER PER ANSI/TPI 1 SEC. 2.

MANUEL MARTINEZ
CERTIFICATE
No. 47182
STATE OF FLORIDA
PROFESSIONAL ENGINEER
Feb 25, 04

TC LL	30.0 PSF	REF	R487-- 84310
TC DL	7.0 PSF	DATE	02/25/04
BC DL	10.0 PSF	DRW	HCUSR487 04056074
BC LL	0.0 PSF	HC-ENG	JB/MMA
TOT.LD.	47.0 PSF	SEQN-	44129
DUR.FAC.	1.33	FROM	JP
SPACING	SEE ABOVE	JREF-	1SAP487_Z04

TOP CHORD 2x4 SP #2 Dense
BOT CHORD 2x4 SP #2 Dense
WEBS 2x4 SP #3

SPECIAL LOADS
------(LUMBER DUR.FAC.=1.33 / PLATE DUR.FAC.=1.33)
TC - From 96 PLF at -1.50 to 96 PLF at 5.00
BC - From 4 PLF at -1.50 to 4 PLF at 0.00
BC - From 20 PLF at 0.00 to 20 PLF at 5.00

110 MPH WIND, 8.70 FT MEAN HGT, ASCE 7-98, CLOSED BLDG, LOCATED ANYWHERE IN ROOF, CAT II, EXP B, WIND TCDL=5.0 PSF, WIND BCDL=5.0 PSF.

RIGHT END VERTICAL NOT EXPOSED TO WIND PRESSURE.

DEFLECTION MEETS L/240 LIVE AND L/180 TOTAL LOAD.

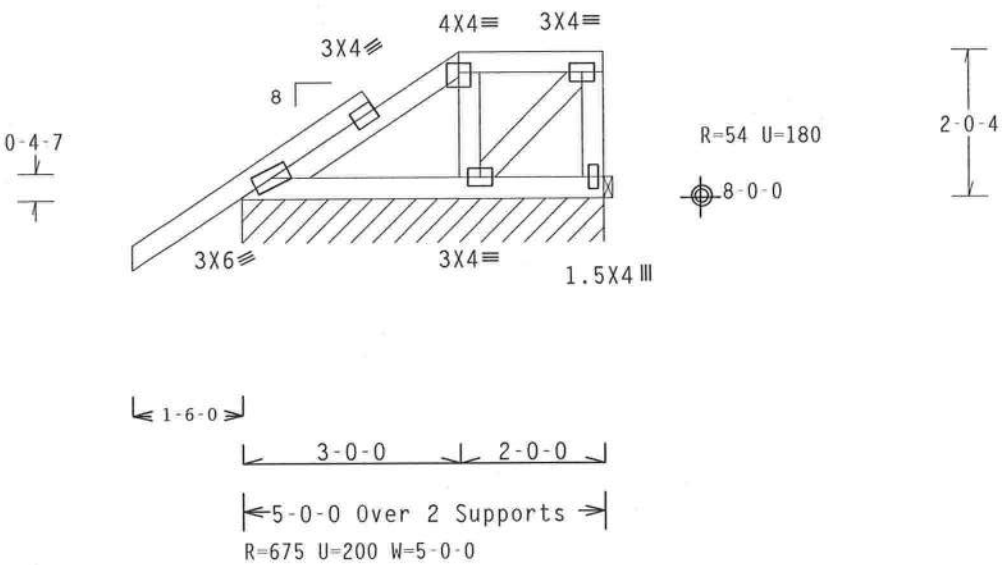

PLT TYP. Wave TPI95 Design Crit: TPI-1995 6.10 FL/-/4/-/-/R/- Scale =.375"/Ft.

ALPINE
Alpine Engineered Products, Inc.
1950 Marley Drive
Haines City, FL 33844
FL Certificate of Authorization # 567

WARNING TRUSSES REQUIRE EXTREME CARE IN FABRICATION, HANDLING, SHIPPING, INSTALLING AND BRACING. REFER TO BCSI 1-03 (BUILDING COMPONENT SAFETY INFORMATION), PUBLISHED BY TPI (TRUSS PLATE INSTITUTE, 583 D'ONOFRIO DR., SUITE 200, MADISON, WI 53719) AND WTCA (WOOD TRUSS COUNCIL OF AMERICA, 6300 ENTERPRISE LN, MADISON, WI 53719) FOR SAFETY PRACTICES PRIOR TO PERFORMING THESE FUNCTIONS. UNLESS OTHERWISE INDICATED, TOP CHORD SHALL HAVE PROPERLY ATTACHED STRUCTURAL PANELS AND BOTTOM CHORD SHALL HAVE A PROPERLY ATTACHED RIGID CEILING.

IMPORTANT FURNISH A COPY OF THIS DESIGN TO THE INSTALLATION CONTRACTOR. ALPINE ENGINEERED PRODUCTS, INC. SHALL NOT BE RESPONSIBLE FOR ANY DEVIATION FROM THIS DESIGN; ANY FAILURE TO BUILD THE TRUSS IN CONFORMANCE WITH TPI; OR FABRICATING, HANDLING, SHIPPING, INSTALLING & BRACING OF TRUSSES. DESIGN CONFORMS WITH APPLICABLE PROVISIONS OF NDS (NATIONAL DESIGN SPEC, BY AF&PA) AND TPI. ALPINE CONNECTOR PLATES ARE MADE OF 20/18/16GA (W,H/S/K) ASTM A653 GRADE 40/60 (W, K/H,S) GALV. STEEL. APPLY PLATES TO EACH FACE OF TRUSS AND, UNLESS OTHERWISE LOCATED ON THIS DESIGN, POSITION PER DRAWINGS 160A-Z. ANY INSPECTION OF PLATES FOLLOWED BY (1) SHALL BE PER ANNEX A3 OF TPI1-2002 SEC.3. A SEAL ON THIS DRAWING INDICATES ACCEPTANCE OF PROFESSIONAL ENGINEERING RESPONSIBILITY SOLELY FOR THE TRUSS COMPONENT DESIGN SHOWN. THE SUITABILITY AND USE OF THIS COMPONENT FOR ANY BUILDING IS THE RESPONSIBILITY OF THE BUILDING DESIGNER PER ANSI/TPI 1 SEC. 2.

MANUEL MARTINEZ
CERTIFICATE
No. 47182
STATE OF FLORIDA
PROFESSIONAL ENGINEER
02/25/04

TC LL	30.0 PSF	REF	R487-- 84311
TC DL	7.0 PSF	DATE	02/25/04
BC DL	10.0 PSF	DRW	HCUSR487 04056080
BC LL	0.0 PSF	HC-ENG	JB/MMA
TOT.LD.	47.0 PSF	SEQN-	44153
DUR.FAC.	1.33	FROM	JP
SPACING	SEE ABOVE	JREF-	1SAP487_Z04

(080 -- 080-SIMOUE HOMES / LOT 83 CALLOWAY - H19AP)

Top chord 2x4 SP #2 Dense
Bot chord 2x4 SP #2 Dense
Webs 2x4 SP #3

REFER TO DWG PIGBACKA1001 OR PIGBACKB1001 FOR PIGGYBACK DETAILS.

110 mph wind, 20.37 ft mean hgt, ASCE 7-98, CLOSED bldg, not located within 4.50 ft from roof edge, CAT II, EXP B, wind TC DL=5.0 psf, wind BC DL=5.0 psf.

Deflection meets L/240 live and L/180 total load. Creep increase factor for dead load is 1.00.

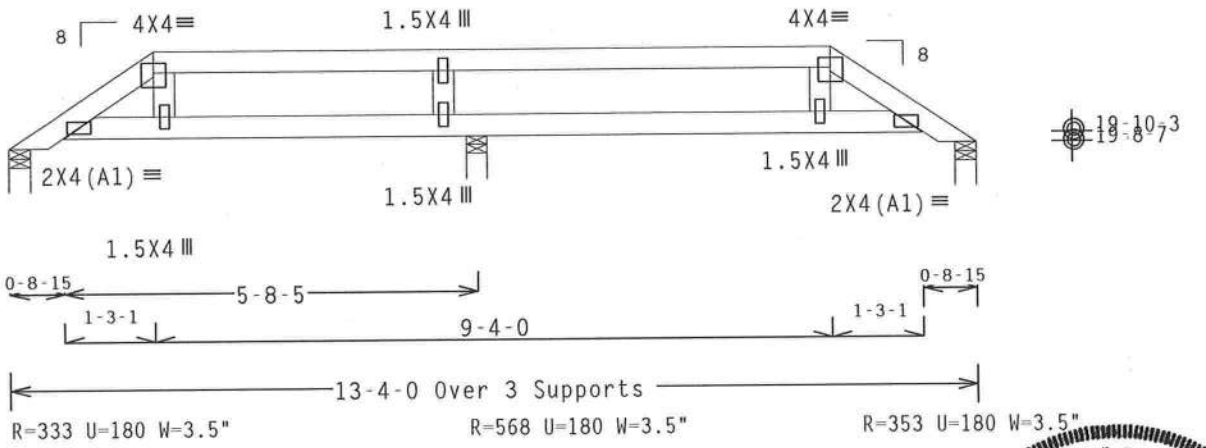

PLT TYP. Wave TPI 95 | Design Crit: TPI-1995 | 6.10 | FL/-/4/-/-/R/- | Scale =.375"/Ft.

ALPINE

Alpine Engineered Products, Inc.
1950 Marley Drive
Haines City, FL 33844
FL Certificate of Authorization # 567

WARNING TRUSSES REQUIRE EXTREME CARE IN FABRICATION, HANDLING, SHIPPING, INSTALLING AND BRACING. REFER TO BCSI 1-03 (BUILDING COMPONENT SAFETY INFORMATION), PUBLISHED BY TPI (TRUSS PLATE INSTITUTE, 583 D'ONOFRIO DR., SUITE 200, MADISON, WI 53719) AND WTCA (WOOD TRUSS COUNCIL OF AMERICA, 6300 ENTERPRISE LN, MADISON, WI 53719) FOR SAFETY PRACTICES PRIOR TO PERFORMING THESE FUNCTIONS. UNLESS OTHERWISE INDICATED, TOP CHORD SHALL HAVE PROPERLY ATTACHED STRUCTURAL PANELS AND BOTTOM CHORD SHALL HAVE A PROPERLY ATTACHED RIGID CEILING.

IMPORTANT FURNISH A COPY OF THIS DESIGN TO THE INSTALLATION CONTRACTOR. ALPINE ENGINEERED PRODUCTS, INC. SHALL NOT BE RESPONSIBLE FOR ANY DEVIATION FROM THIS DESIGN; ANY FAILURE TO BUILD THE TRUSS IN CONFORMANCE WITH TPI; OR FABRICATING, HANDLING, SHIPPING, INSTALLING & BRACING OF TRUSSES. DESIGN CONFORMS WITH APPLICABLE PROVISIONS OF NDS (NATIONAL DESIGN SPEC. BY AF&PA) AND TPI. ALPINE CONNECTOR PLATES ARE MADE OF 20/18/16GA (W,H/S/K) ASTM A653 GRADE 40/60 (W, K/H,S) GALV. STEEL. APPLY PLATES TO EACH FACE OF TRUSS AND, UNLESS OTHERWISE LOCATED ON THIS DESIGN, POSITION PER DRAWINGS 160A-Z. ANY INSPECTION OF PLATES FOLLOWED BY (1) SHALL BE PER ANNEX A3 OF TPI1-2002 SEC.3. A SEAL ON THIS DRAWING INDICATES ACCEPTANCE OF PROFESSIONAL ENGINEERING RESPONSIBILITY SOLELY FOR THE TRUSS COMPONENT DESIGN SHOWN. THE SUITABILITY AND USE OF THIS COMPONENT FOR ANY BUILDING IS THE RESPONSIBILITY OF THE BUILDING DESIGNER PER ANSI/TPI 1 SEC. 2.

MANUEL MARTINEZ
CERTIFICATE
No. 47182
STATE OF FLORIDA
PROFESSIONAL ENGINEER
Feb

TC LL	30.0 PSF	REF	R487-- 84312
TC DL	7.0 PSF	DATE	02/25/04
BC DL	10.0 PSF	DRW	HCUSR487 04056085
BC LL	0.0 PSF	HC-ENG	AML /MMA
TOT.LD.	47.0 PSF	SEQN-	54700
DUR.FAC.	1.33	FROM	JP
SPACING	24.0"	JREF-	1SAP487_Z04

(080 -- 080-SIMQUE HOMES / LOT 83 CALLOWAY - H2108AP)

Top chord 2x4 SP #2 Dense
Bot chord 2x4 SP #2 Dense
Webs 2x4 SP #3

REFER TO DWG PIGBACKA1001 OR PIGBACKB1001 FOR PIGGYBACK DETAILS.

110 mph wind, 21.33 ft mean hgt, ASCE 7-98, CLOSED bldg, not located within 4.50 ft from roof edge, CAT II, EXP B, wind TC DL=5.0 psf, wind BC DL=5.0 psf.

Deflection meets L/240 live and L/180 total load. Creep increase factor for dead load is 1.00.

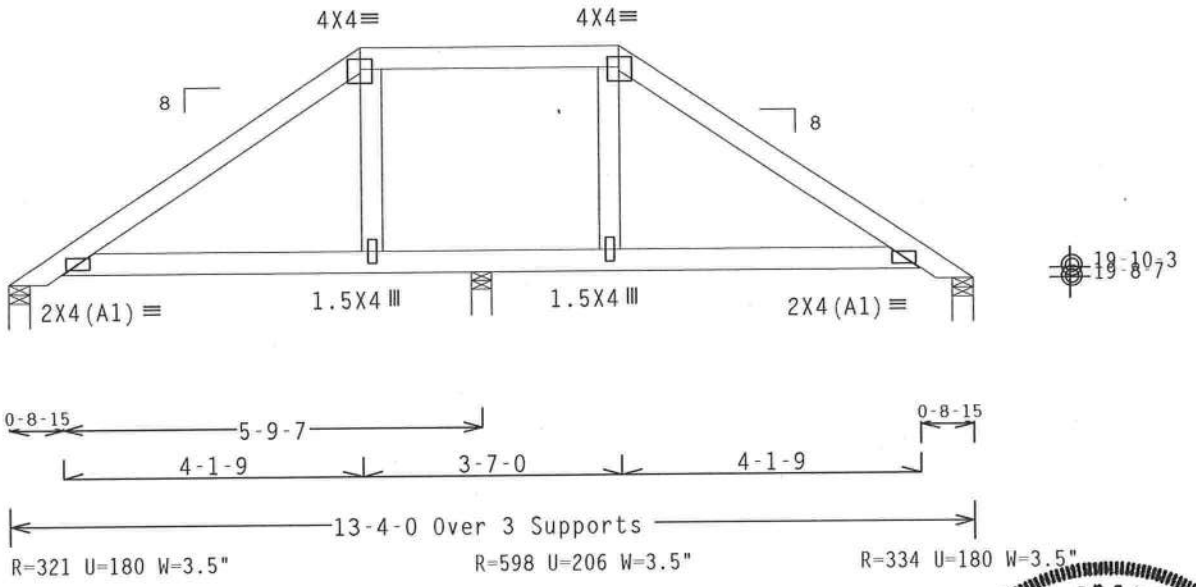

PLT TYP. Wave TPI 95 | Design Crit: TPI-1995 | 6.10 | FL/-/4/-/-/R/- | Scale =.375"/Ft.

ALPINE
Alpine Engineered Products, Inc.
1950 Marley Drive
Haines City, FL 33844

WARNING TRUSSES REQUIRE EXTREME CARE IN FABRICATION, HANDLING, SHIPPING, INSTALLING AND BRACING. REFER TO BCSI 1-03 (BUILDING COMPONENT SAFETY INFORMATION), PUBLISHED BY TPI (TRUSS PLATE INSTITUTE, 583 D'ONOFRIO DR., SUITE 200, MADISON, WI 53719) AND WTCA (WOOD TRUSS COUNCIL OF AMERICA, 6300 ENTERPRISE LN, MADISON, WI 53719) FOR SAFETY PRACTICES PRIOR TO PERFORMING THESE FUNCTIONS. UNLESS OTHERWISE INDICATED, TOP CHORD SHALL HAVE PROPERLY ATTACHED STRUCTURAL PANELS AND BOTTOM CHORD SHALL HAVE A PROPERLY ATTACHED RIGID CEILING.

IMPORTANT FURNISH A COPY OF THIS DESIGN TO THE INSTALLATION CONTRACTOR. ALPINE ENGINEERED PRODUCTS, INC. SHALL NOT BE RESPONSIBLE FOR ANY DEVIATION FROM THIS DESIGN; ANY FAILURE TO BUILD THE TRUSS IN CONFORMANCE WITH TPI; OR FABRICATING, HANDLING, SHIPPING, INSTALLING & BRACING OF TRUSSES. DESIGN CONFORMS WITH APPLICABLE PROVISIONS OF NDS (NATIONAL DESIGN SPEC. BY AF&PA) AND TPI. ALPINE CONNECTOR PLATES ARE MADE OF 20/18/16GA (W,H/S/K) ASTM A653 GRADE 40/60 (W, K/H,S) GALV. STEEL. APPLY PLATES TO EACH FACE OF TRUSS AND, UNLESS OTHERWISE LOCATED ON THIS DESIGN, POSITION PER DRAWINGS 160A-Z. ANY INSPECTION OF PLATES FOLLOWED BY (I) SHALL BE PER ANNEX A3 OF TPI1-2002 SEC.3. A SEAL ON THIS DRAWING INDICATES ACCEPTANCE OF PROFESSIONAL ENGINEERING RESPONSIBILITY SOLELY FOR THE TRUSS COMPONENT DESIGN SHOWN. THE SUITABILITY AND USE OF THIS COMPONENT FOR ANY BUILDING IS THE RESPONSIBILITY OF THE BUILDING DESIGNER PER ANSI/TPI 1 SEC. 2.

MANUEL MARTINEZ CERTIFICATE No. 47182 STATE OF FLORIDA PROFESSIONAL ENGINEER
Feb 5, 04

TC LL	30.0 PSF	REF	R487-- 84313
TC DL	7.0 PSF	DATE	02/25/04
BC DL	10.0 PSF	DRW	HCUSR487 04056086
BC LL	0.0 PSF	HC-ENG	AML /MMA
TOT.LD.	47.0 PSF	SEQN-	54704
DUR.FAC.	1.33	FROM	JP
SPACING	24.0"	JREF-	1SAP487_Z04

(080 -- 080-SIMQUE HOMES / LOT 83 CALLOWAY - AP)

TOP CHORD 2x4 SP #2 Dense
BOT CHORD 2x4 SP #2 Dense
WEBS 2x4 SP #3

DEFLECTION MEETS L/240 LIVE AND L/180 TOTAL LOAD.

110 MPH WIND, 21.93 FT MEAN HGT, ASCE 7-98, CLOSED BLDG, NOT LOCATED WITHIN 4.50 FT FROM ROOF EDGE, CAT II, EXP B, WIND TCDL=5.0 PSF, WIND BCDL=5.0 PSF.

REFER TO DWG PIGBACKA1001 OR PIGBACKB1001 FOR PIGGYBACK DETAILS.

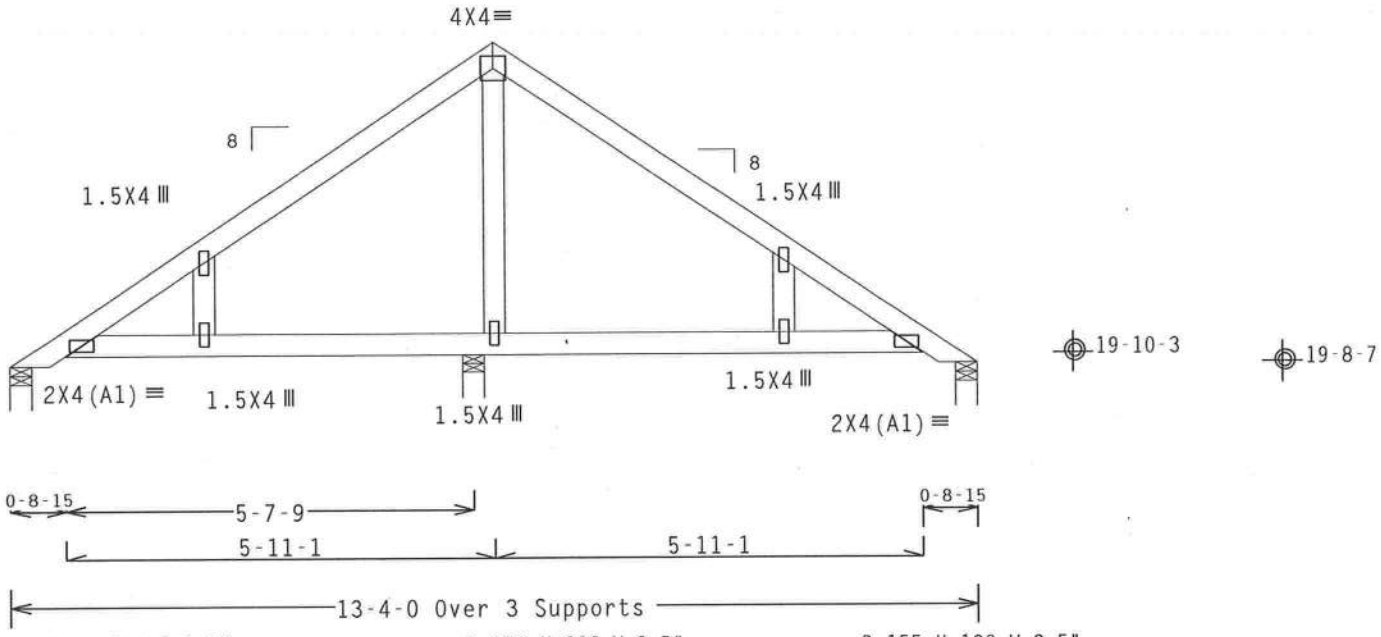

PLT TYP. Wave TPI95 | Design Crit: TPI-1995 | 6.10 | FL/-/4/-/-/R/- | Scale =.375"/Ft.

ALPINE
Alpine Engineered Products, Inc.
1950 Marley Drive
Haines City, FL 33844
FL Certificate of Authorization # 567

WARNING TRUSSES REQUIRE EXTREME CARE IN FABRICATION, HANDLING, SHIPPING, INSTALLING AND BRACING. REFER TO BCSI 1-03 (BUILDING COMPONENT SAFETY INFORMATION), PUBLISHED BY TPI (TRUSS PLATE INSTITUTE, 583 D'ONOFRIO DR., SUITE 200, MADISON, WI 53719) AND WTCA (WOOD TRUSS COUNCIL OF AMERICA, 6300 ENTERPRISE LN, MADISON, WI 53719) FOR SAFETY PRACTICES PRIOR TO PERFORMING THESE FUNCTIONS. UNLESS OTHERWISE INDICATED, TOP CHORD SHALL HAVE PROPERLY ATTACHED STRUCTURAL PANELS AND BOTTOM CHORD SHALL HAVE A PROPERLY ATTACHED RIGID CEILING.

IMPORTANT FURNISH A COPY OF THIS DESIGN TO THE INSTALLATION CONTRACTOR. ALPINE ENGINEERED PRODUCTS, INC. SHALL NOT BE RESPONSIBLE FOR ANY DEVIATION FROM THIS DESIGN; ANY FAILURE TO BUILD THE TRUSS IN CONFORMANCE WITH TPI; OR FABRICATING, HANDLING, SHIPPING, INSTALLING & BRACING OF TRUSSES. DESIGN CONFORMS WITH APPLICABLE PROVISIONS OF NDS (NATIONAL DESIGN SPEC. BY AF&PA) AND TPI. ALPINE CONNECTOR PLATES ARE MADE OF 20/18/16GA (W,H/S/K) ASTM A653 GRADE 40/60 (W, K/H,S) GALV. STEEL. APPLY PLATES TO EACH FACE OF TRUSS AND, UNLESS OTHERWISE LOCATED ON THIS DESIGN, POSITION PER DRAWINGS 160A-Z. ANY INSPECTION OF PLATES FOLLOWED BY (1) SHALL BE PER ANNEX A3 OF TPI1-2002 SEC.3. A SEAL ON THIS DRAWING INDICATES ACCEPTANCE OF PROFESSIONAL ENGINEERING RESPONSIBILITY SOLELY FOR THE TRUSS COMPONENT DESIGN SHOWN. THE SUITABILITY AND USE OF THIS COMPONENT FOR ANY BUILDING IS THE RESPONSIBILITY OF THE BUILDING DESIGNER PER ANSI/TPI 1 SEC. 2.

MANUEL MARTINEZ CERTIFICATE No. 47182 STATE OF FLORIDA PROFESSIONAL ENGINEER
Feb 25 '04

TC LL	30.0 PSF	REF	R487-- 84314
★TC DL	7.0 PSF	DATE	02/25/04
BC DL	10.0 PSF	DRW	HCUSR487 04056087
BC LL	0.0 PSF	HC-ENG	JB/MMA
TOT.LD.	47.0 PSF	SEQN-	44389
DUR.FAC.	1.33	FROM	JP
SPACING	24.0"	JREF-	1SAP487_Z04

THIS DWG PREPARED FROM COMPUTER INPUT (LOADS & DIMENSIONS) SUBMITTED BY TRUSS MFR.

TOP CHORD 2x4 SP #2 Dense
BOT CHORD 2x4 SP #2 Dense
WEBS 2x4 SP #3

DEFLECTION MEETS L/240 LIVE AND L/180 TOTAL LOAD.

110 MPH WIND, 21.70 FT MEAN HGT, ASCE 7-98, CLOSED BLDG, NOT LOCATED WITHIN 4.50 FT FROM ROOF EDGE, CAT II, EXP B, WIND TCDL=5.0 PSF, WIND BCDL=5.0 PSF.

REFER TO DWG PIGBACKA1001 OR PIGBACKB1001 FOR PIGGYBACK DETAILS.

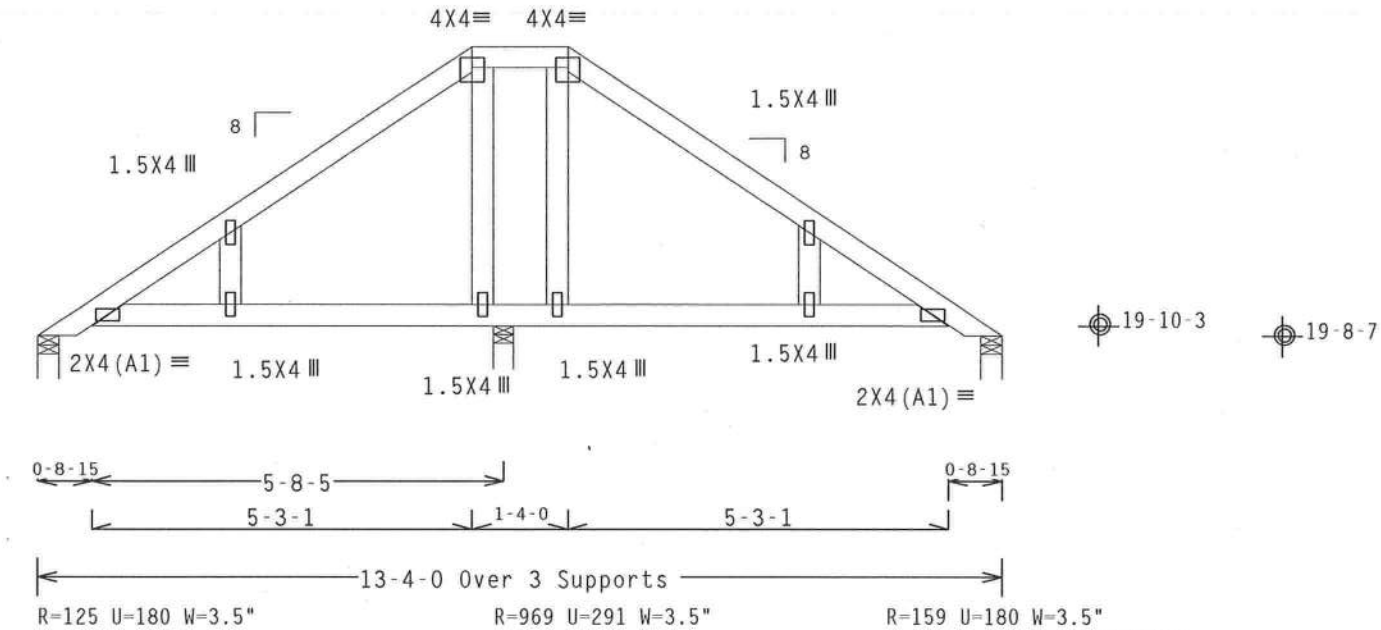

PLT TYP. Wave TPI95 | Design Crit: TPI-1995 | 6.10 | FL/-/4/-/-/R/- | Scale =.375"/Ft.

ALPINE
Alpine Engineered Products, Inc.
1950 Marley Drive
Haines City, FL 33844
FL Certificate of Authorization # 567

WARNING TRUSSES REQUIRE EXTREME CARE IN FABRICATION, HANDLING, SHIPPING, INSTALLING AND BRACING. REFER TO BCSI 1-03 (BUILDING COMPONENT SAFETY INFORMATION), PUBLISHED BY TPI (TRUSS PLATE INSTITUTE, 583 D'ONOFRIO DR., SUITE 200, MADISON, WI 53719) AND WTCA (WOOD TRUSS COUNCIL OF AMERICA, 6300 ENTERPRISE LN, MADISON, WI 53719) FOR SAFETY PRACTICES PRIOR TO PERFORMING THESE FUNCTIONS. UNLESS OTHERWISE INDICATED, TOP CHORD SHALL HAVE PROPERLY ATTACHED STRUCTURAL PANELS AND BOTTOM CHORD SHALL HAVE A PROPERLY ATTACHED RIGID CEILING.

IMPORTANT FURNISH A COPY OF THIS DESIGN TO THE INSTALLATION CONTRACTOR. ALPINE ENGINEERED PRODUCTS, INC. SHALL NOT BE RESPONSIBLE FOR ANY DEVIATION FROM THIS DESIGN; ANY FAILURE TO BUILD THE TRUSS IN CONFORMANCE WITH TPI; OR FABRICATING, HANDLING, SHIPPING, INSTALLING & BRACING OF TRUSSES. DESIGN CONFORMS WITH APPLICABLE PROVISIONS OF NDS (NATIONAL DESIGN SPEC. BY AF&PA) AND TPI. ALPINE CONNECTOR PLATES ARE MADE OF 20/18/16GA (W,H/S/K) ASTM A653 GRADE 40/60 (W, K/H,S) GALV. STEEL. APPLY PLATES TO EACH FACE OF TRUSS AND, UNLESS OTHERWISE LOCATED ON THIS DESIGN, POSITION PER DRAWINGS 160A-Z. ANY INSPECTION OF PLATES FOLLOWED BY (1) SHALL BE PER ANNEX A3 OF TPI1-2002 SEC.3. A SEAL ON THIS DRAWING INDICATES ACCEPTANCE OF PROFESSIONAL ENGINEERING RESPONSIBILITY SOLELY FOR THE TRUSS COMPONENT DESIGN SHOWN. THE SUITABILITY AND USE OF THIS COMPONENT FOR ANY BUILDING IS THE RESPONSIBILITY OF THE BUILDING DESIGNER PER ANSI/TPI 1 SEC. 2.

MANUEL MARTINEZ CERTIFICATE No. 47182 STATE OF FLORIDA PROFESSIONAL ENGINEER

TC LL	30.0 PSF	REF	R487-- 84315
TC DL	7.0 PSF	DATE	02/25/04
BC DL	10.0 PSF	DRW	HCUSR487 04056088
BC LL	0.0 PSF	HC-ENG	JB/MMA
TOT.LD.	47.0 PSF	SEQN-	44452
DUR.FAC.	1.33	FROM	JP
SPACING	24.0"	JREF-	1SAP487_Z04

(080 -- 080-SIMQUE HOMES / LOT 83 CALLOWAY - H21AP)

Top chord 2x4 SP #2 Dense
Bot chord 2x4 SP #2 Dense
Webs 2x4 SP #3

REFER TO DWG PIGBACKA1001 OR PIGBACKB1001 FOR PIGGYBACK DETAILS.

110 mph wind, 21.04 ft mean hgt, ASCE 7-98, CLOSED bldg, not located within 4.50 ft from roof edge, CAT II, EXP B, wind TC DL=5.0 psf, wind BC DL=5.0 psf.

Deflection meets L/240 live and L/180 total load. Creep increase factor for dead load is 1.00.

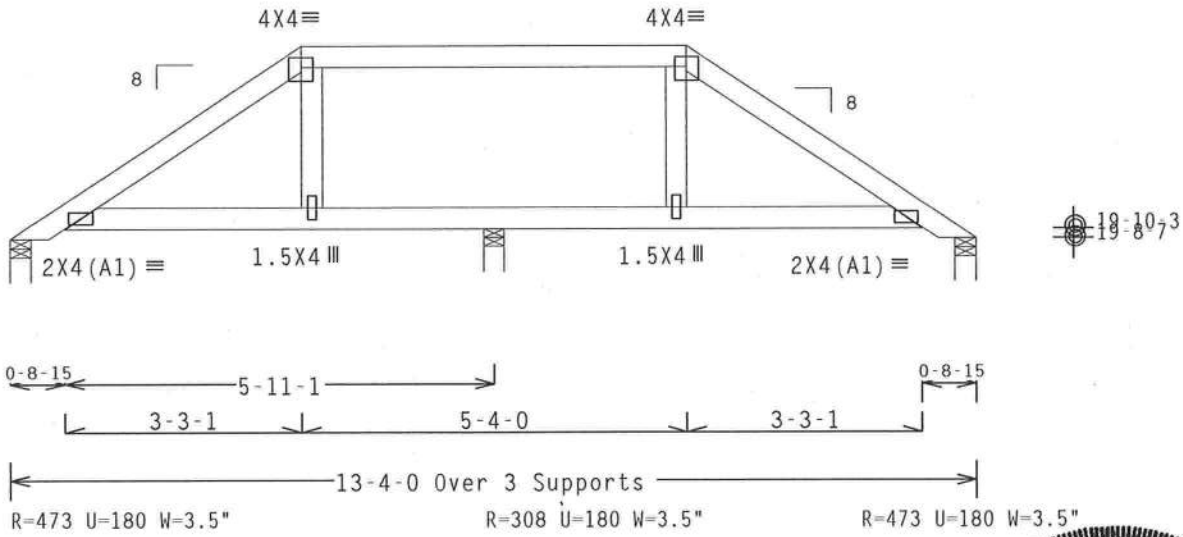

PLT TYP. Wave TPI 95 | Design Crit: TPI-1995 | 6.10 | FL/-/4/-/-/R/- | Scale =.375"/Ft.

ALPINE
Alpine Engineered Products, Inc.
1950 Marley Drive
Haines City, FL 33844
FL Certificate of Authorization # 567

WARNING TRUSSES REQUIRE EXTREME CARE IN FABRICATION, HANDLING, SHIPPING, INSTALLING AND BRACING. REFER TO BCSI 1-03 (BUILDING COMPONENT SAFETY INFORMATION), PUBLISHED BY TPI (TRUSS PLATE INSTITUTE, 583 D'ONOFRIO DR., SUITE 200, MADISON, WI 53719) AND WTCA (WOOD TRUSS COUNCIL OF AMERICA, 6300 ENTERPRISE LN, MADISON, WI 53719) FOR SAFETY PRACTICES PRIOR TO PERFORMING THESE FUNCTIONS. UNLESS OTHERWISE INDICATED, TOP CHORD SHALL HAVE PROPERLY ATTACHED STRUCTURAL PANELS AND BOTTOM CHORD SHALL HAVE A PROPERLY ATTACHED RIGID CEILING.

IMPORTANT FURNISH A COPY OF THIS DESIGN TO THE INSTALLATION CONTRACTOR. ALPINE ENGINEERED PRODUCTS, INC. SHALL NOT BE RESPONSIBLE FOR ANY DEVIATION FROM THIS DESIGN; ANY FAILURE TO BUILD THE TRUSS IN CONFORMANCE WITH TPI; OR FABRICATING, HANDLING, SHIPPING, INSTALLING & BRACING OF TRUSSES. DESIGN CONFORMS WITH APPLICABLE PROVISIONS OF NDS (NATIONAL DESIGN SPEC. BY AF&PA) AND TPI. ALPINE CONNECTOR PLATES ARE MADE OF 20/18/16GA (W,H/S/K) ASTM A653 GRADE 40/60 (W, K/H,S) GALV. STEEL. APPLY PLATES TO EACH FACE OF TRUSS AND, UNLESS OTHERWISE LOCATED ON THIS DESIGN, POSITION PER DRAWINGS 160A-Z. ANY INSPECTION OF PLATES FOLLOWED BY (1) SHALL BE PER ANNEX A3 OF TPI1-2002 SEC.3. A SEAL ON THIS DRAWING INDICATES ACCEPTANCE OF PROFESSIONAL ENGINEERING RESPONSIBILITY SOLELY FOR THE TRUSS COMPONENT DESIGN SHOWN. THE SUITABILITY AND USE OF THIS COMPONENT FOR ANY BUILDING IS THE RESPONSIBILITY OF THE BUILDING DESIGNER PER ANSI/TPI 1 SEC. 2.

MANUEL MARTINEZ
CERTIFICATE
No. 47182
STATE OF FLORIDA
PROFESSIONAL ENGINEER
Feb 25, 2004

TC LL	30.0 PSF	REF	R487-- 84316
★TC DL	7.0 PSF	DATE	02/25/04
BC DL	10.0 PSF	DRW	HCUSR487 04056089
BC LL	0.0 PSF	HC-ENG	AML /MMA
TOT.LD.	47.0 PSF	SEQN-	54702
DUR.FAC.	1.33	FROM	JP
SPACING	24.0"	JREF-	1SAP487_Z04

BEARING BLOCK NAIL SPACING DETAIL

MINIMUM SPACING FOR SINGLE BEARING BLOCK IS SHOWN. DOUBLE NAIL SPACINGS AND STAGGER NAILING FOR TWO BLOCKS. GREATER SPACING MAY BE REQUIRED TO AVOID SPLITTING.

A – EDGE DISTANCE AND SPACING BETWEEN STAGGERED ROWS OF NAILS (6 NAIL DIAMETERS)
B – SPACING OF NAILS IN A ROW (12 NAIL DIAMETERS)
C – END DISTANCE (15 NAIL DIAMETERS)

IF NAIL HOLES ARE PREBORED, SOME SPACING MAY BE REDUCED BY THE AMOUNTS GIVEN BELOW:
- * SPACING MAY BE REDUCED BY 50%
- ** SPACING MAY BE REDUCED BY 33%

BEARING BLOCK TO BE SAME SIZE AND SPECIES AS BOTTOM CHORD. BLOCKS MAY BE ANY GRADE WITHIN THE SPECIES, PROVIDED THE COMPRESSION PERPENDICULAR TO GRAIN VALUE (Fc–perp) IS AT LEAST THAT OF THE CHORD.

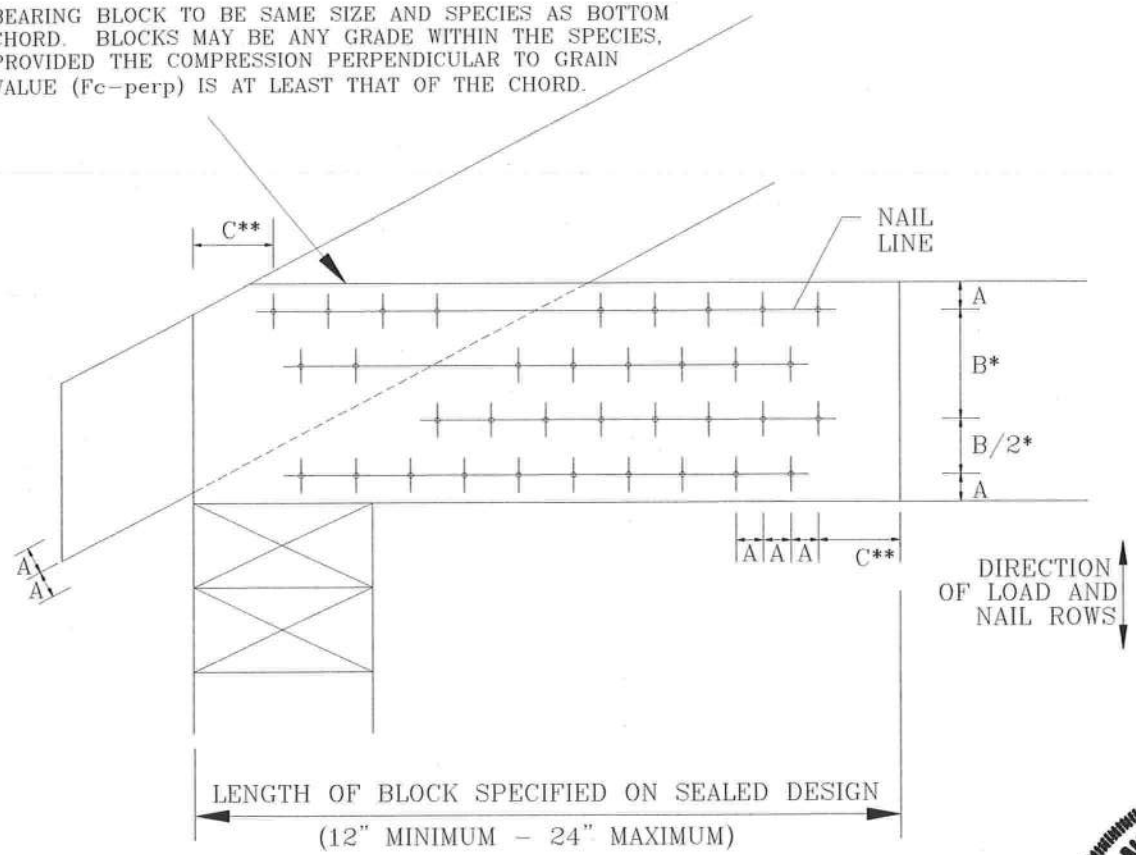

MAXIMUM NUMBER OF NAIL LINES PARALLEL TO GRAIN*

NAIL TYPE	CHORD SIZE 2X4	2X6	2X8	2X10	2X12
8d BOX (0.113"X2.5")	3	6	9	12	15
10d BOX (0.128"X3")	3	5	7	10	12
12d BOX (0.128"X3.25")	3	5	7	10	12
16d BOX (0.135"X3.5")	3	5	7	10	12
20d BOX (0.148"X4")	2	4	5	6	8
8d COMMON (0.131"X2.5")	3	5	7	10	12
10d COMMON (0.148"X3")	2	4	6	8	10
12d COMMON (0.148"X3.25")	2	4	6	8	10
16d COMMON (0.162"X3.5")	2	4	6	8	10
0.120"X2.5" GUN	3	6	8	11	14
0.131"X2.5" GUN	3	5	7	10	12
0.120"X3.0" GUN	3	6	8	11	14
0.131"x3.0" GUN	3	5	7	10	12

MINIMUM NAIL SPACING DISTANCES

NAIL TYPE	DISTANCES A	B*	C**
8d BOX (0.113"X2.5")	3/4"	1 3/8"	1 3/4"
10d BOX (0.128"X3")	7/8"	1 5/8"	2"
12d BOX (0.128"X3.25")	7/8"	1 5/8"	2"
16d BOX (0.135"X3.5")	7/8"	1 5/8"	2 1/8"
20d BOX (0.148"X4")	1"	1 7/8"	2 1/4"
8d COMMON (0.131"X2.5")	7/8"	1 5/8"	2"
10d COMMON (0.148"X3")	1"	1 7/8"	2 1/4"
12d COMMON (0.148"X3.25")	1"	1 7/8"	2 1/4"
16d COMMON (0.162"X3.5")	1'	2"	2 1/2"
0.120"X2.5" GUN	3/4"	1 1/2"	1 7/8"
0.131"X2.5" GUN	7/8"	1 5/8"	2"
0.120"X3.0" GUN	3/4"	1 1/2"	1 7/8"
[illegible] 0" GUN	7/8"	1 5/8"	2"

THIS DRAWING REPLACES DRAWING B139 AND CNBRGBLK0699

ALPINE

ALPINE ENGINEERED PRODUCTS, INC.
POMPANO BEACH, FLORIDA

WARNING TRUSSES REQUIRE EXTREME CARE IN FABRICATING, HANDLING, SHIPPING, INSTALLING AND BRACING. REFER TO BCSI 1-03 (BUILDING COMPONENT SAFETY INFORMATION), PUBLISHED BY TPI (TRUSS PLATE INSTITUTE, 583 D'ONOFRIO DR., SUITE 200, MADISON, WI. 53719) AND WTCA (WOOD TRUSS COUNCIL OF AMERICA, 6300 ENTERPRISE LN, MADISON, WI 53719) FOR SAFETY PRACTICES PRIOR TO PERFORMING THESE FUNCTIONS. UNLESS OTHERWISE INDICATED, TOP CHORD SHALL HAVE PROPERLY ATTACHED STRUCTURAL PANELS AND BOTTOM CHORD SHALL HAVE A PROPERLY ATTACHED RIGID CEILING.

IMPORTANT FURNISH COPY OF THIS DESIGN TO INSTALLATION CONTRACTOR. ALPINE ENGINEERED PRODUCTS, INC., SHALL NOT BE RESPONSIBLE FOR ANY DEVIATION FROM THIS DESIGN; ANY FAILURE TO BUILD THE TRUSS IN CONFORMANCE WITH TPI; OR FABRICATING, HANDLING, SHIPPING, INSTALLING & BRACING OF TRUSSES. DESIGN CONFORMS WITH APPLICABLE PROVISIONS OF NDS (NATIONAL DESIGN SPEC, BY AF&PA) AND TPI. ALPINE CONNECTOR PLATES ARE MADE OF 20/18/16GA (W,H/S/K) ASTM A653 GRADE 40/60 (W,K/H,S) GALV. STEEL. APPLY PLATES TO EACH FACE OF TRUSS AND, UNLESS OTHERWISE LOCATED ON THIS DESIGN, POSITION PER DRAWINGS 160A-Z. ANY INSPECTION OF PLATES FOLLOWED BY (I) SHALL BE PER ANNEX A3 OF TPI 1-2002 SEC. 3. A SEAL ON THIS DRAWING INDICATES ACCEPTANCE OF PROFESSIONAL ENGINEERING RESPONSIBILITY SOLELY FOR THE TRUSS COMPONENT DESIGN SHOWN. THE SUITABILITY AND USE OF THIS COMPONENT FOR ANY BUILDING IS THE RESPONSIBILITY OF THE BUILDING DESIGNER, PER ANSI/TPI 1 SEC. 2.

MANUEL MARTINEZ
CERTIFICATE
No. 47182
STATE OF FLORIDA
PROFESSIONAL ENGINEER

REF	BEARING BLOCK
DATE	11/26/03
DRWG	CNBRGBLK1103
–ENG	SJP/KAR

CLB WEB BRACE SUBSTITUTION

THIS DETAIL IS TO BE USED WHEN CONTINUOUS LATERAL BRACING (CLB) IS SPECIFIED ON AN ALPINE TRUSS DESIGN BUT AN ALTERNATIVE WEB BRACING METHOD IS DESIRED.

NOTES:

THIS DETAIL IS ONLY APPLICABLE FOR CHANGING THE SPECIFIED CLB SHOWN ON SINGLE PLY SEALED DESIGNS TO T-BRACING OR SCAB BRACING.

ALTERNATIVE BRACING SPECIFIED IN CHART BELOW MAY BE CONSERVATIVE. FOR MINIMUM ALTERNATIVE BRACING, RE-RUN DESIGN WITH APPROPRIATE BRACING.

WEB MEMBER SIZE	SPECIFIED CLB BRACING	ALTERNATIVE BRACING T OR L-BRACE	ALTERNATIVE BRACING SCAB BRACE
2X3 OR 2X4	1 ROW	2X4	1-2X4
2X3 OR 2X4	2 ROWS	2X6	2-2X4
2X6	1 ROW	2X4	1-2X6
2X6	2 ROWS	2X6	2-2X4(*)
2X8	1 ROW	2X6	1-2X8
2X8	2 ROWS	2X6	2-2X6(*)

T-BRACE, L-BRACE AND SCAB BRACE TO BE SAME SPECIES AND GRADE OR BETTER THAN WEB MEMBER UNLESS SPECIFIED OTHERWISE ON ENGINEER'S SEALED DESIGN.

(*) CENTER SCAB ON WIDE FACE OF WEB. APPLY (1) SCAB TO EACH FACE OF WEB.

T-BRACING OR L-BRACING:

APPLY TO EITHER SIDE OF WEB NARROW FACE

ATTACH WITH 16d NAILS AT 6" O.C.

BRACE IS A MINIMUM 80% OF WEB MEMBER LENGTH

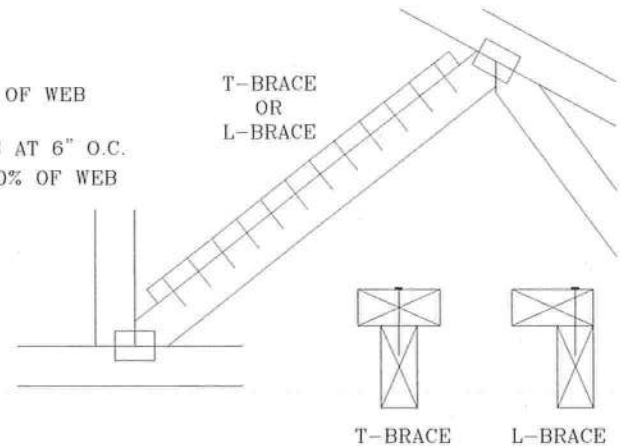

SCAB BRACING:

APPLY SCAB(S) TO WIDE FACE OF WEB. NO MORE THAN (1) SCAB PER FACE.

ATTACH WITH 10d OR .128"x3" GUN NAILS AT 6" O.C. BRACE IS A MINIMUM 80% OF WEB MEMBER LENGTH

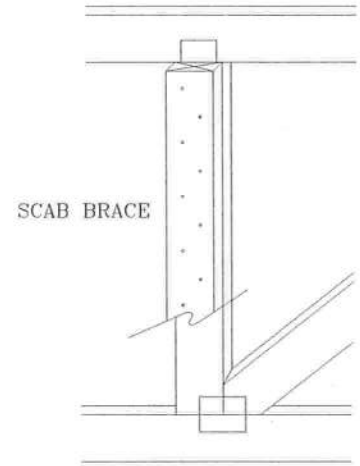

THIS DRAWING REPLACES DRAWING 579,640

ALPINE

ALPINE ENGINEERED PRODUCTS, INC.
POMPANO BEACH, FLORIDA

WARNING TRUSSES REQUIRE EXTREME CARE IN FABRICATING, HANDLING, SHIPPING, INSTALLING AND BRACING. REFER TO BCSI 1-03 (BUILDING COMPONENT SAFETY INFORMATION), PUBLISHED BY TPI (TRUSS PLATE INSTITUTE, 583 D'ONOFRIO DR., SUITE 200, MADISON, WI. 53719) AND WTCA (WOOD TRUSS COUNCIL OF AMERICA, 6300 ENTERPRISE LN, MADISON, WI 53719) FOR SAFETY PRACTICES PRIOR TO PERFORMING THESE FUNCTIONS. UNLESS OTHERWISE INDICATED, TOP CHORD SHALL HAVE PROPERLY ATTACHED STRUCTURAL PANELS AND BOTTOM CHORD SHALL HAVE A PROPERLY ATTACHED RIGID CEILING.

IMPORTANT FURNISH COPY OF THIS DESIGN TO INSTALLATION CONTRACTOR. ALPINE ENGINEERED PRODUCTS, INC., SHALL NOT BE RESPONSIBLE FOR ANY DEVIATION FROM THIS DESIGN; ANY FAILURE TO BUILD THE TRUSS IN CONFORMANCE WITH TPI; OR FABRICATING, HANDLING, SHIPPING, INSTALLING & BRACING OF TRUSSES. DESIGN CONFORMS WITH APPLICABLE PROVISIONS OF NDS (NATIONAL DESIGN SPEC. BY AF&PA) AND TPI. ALPINE CONNECTOR PLATES ARE MADE OF 20/18/16GA (W,H/S/K) ASTM A653 GRADE 40/60 (W,K/H,S) GALV. STEEL. APPLY PLATES TO EACH FACE OF TRUSS AND, UNLESS OTHERWISE LOCATED ON THIS DESIGN, POSITION PER DRAWINGS 160A-Z. ANY INSPECTION OF PLATES FOLLOWED BY (I) SHALL BE PER ANNEX A3 OF TPI 1-2002 SEC. 3. A SEAL ON THIS DRAWING INDICATES ACCEPTANCE OF PROFESSIONAL ENGINEERING RESPONSIBILITY SOLELY FOR THE TRUSS COMPONENT DESIGN SHOWN. THE SUITABILITY AND USE OF THIS COMPONENT FOR ANY BUILDING IS THE RESPONSIBILITY OF THE BUILDING DESIGNER, PER ANSI/TPI 1 SEC. 2.

MANUEL MARTINEZ
CERTIFICATE
No. 47182
STATE OF FLORIDA
PROFESSIONAL ENGINEER

TC LL	PSF	REF	CLB SUBST.
TC DL	PSF	DATE	11/26/03
BC DL	PSF	DRWG	BRCLBSUB1103
BC LL	PSF	-ENG	MLH/KAR
TOT. LD.	PSF		
DUR. FAC.			
SPACING			

LYNCH WELL DRILLING, INC.

RT. 6 BOX 464
LAKE CITY, FL 32025
PHONE (386) 752-6677
FAX (386) 752-1477

RESIDENTIAL WATER WELL BUILDING PERMIT INFORMATION

Building Permit #_____ **Owners Name**_____

Well Depth 180 **Ft.** **Casing Depth** 130 **Ft.** **Water Level** 120 **Ft.**

Casing Size 4 **PVC**_____ **Steel** X

Pump Installation: **Submersible** X **Deep Well Jet**_____ **Shallow Well**____

Pump Make Aermotor **Pump Model #** S20-100 **Hp** 1

System Pressure (PSI)_____ **On** 30 **Off** 50 **Avg. Pressure**____ **(PSI)**

Pumping System GPM at average pressure and pumping level 20 **(GPM)**

Tank Installation: **Precharged (Baldder)** X **Atmospheric (Galvanized)**

Make Challenger **Model** PC 244 **Size** 81 Gallon

Tank Draw-down per cycle at system pressure 25.1 **Gallons**

I HEREBY CERTIFY THAT THIS WATER WELL SYSTEM HAS BEEN INSTALLED AS PER ABOVE INFORMATION.

Lynch Well Drilling
Signature

Lynch Well Drilling, Inc.
Print Name

1274 or 2609
License Number

_____
Date

S/N RSR24586 RIGHT-J SHORT FORM 02/24/04

File name: ASPENL~2.RSR
Job #: 040212
For: Aspen Model
Lot 83, Callaway, Phase III
Lake City Fl 32055

By: Aaron Simque Homes, Inc.
Rt. 9 Box 785-33
Lake City FL 32024
(386) 397-3785

	Htg	Clg
Outside db	31	93
Inside db	70	75
Design TD	39	18
Daily Range	-	M
Inside Humid.	-	50
Grains Water	-	51
Method	Simplified	
Const. qlty	Average	
Fireplaces		1

HEATING EQUIPMENT

Make		
Trade		
Efficiency	7.4 HSPF	
Heating Input	0	Btuh
Heating Output	0	Btuh
Heating Temp Rise	0	Deg F
Actual Heating Fan	1557	CFM
Htg Air Flow Factor	0.037	CFM/Btuh
Space Thermostat		

COOLING EQUIPMENT

Make		
Trade		
Efficiency	10.0 EER	
Sensible Cooling	0	Btuh
Latent Cooling	0	Btuh
Total Cooling	0	Btuh
Actual Cooling Fan	1557	CFM
Clg Air Flow Factor	0.048	CFM/Btuh
Load Sensible Heat Ratio	84	

ROOM NAME	AREA SQ.FT.	HTG BTUH	CLG BTUH	HTG CFM	CLG CFM
Bedroom #2	160	2748	1815	101	87
Bedroom #3	191	2110	1690	78	81
Hall Bath	73	699	329	26	16
Bedroom #4	180	3435	3004	127	144
Bdrm #2 Bath	66	1435	520	53	25
Family Room	322	5917	3337	218	160
Living Room	139	2727	2891	101	138
Foyer	80	3521	3192	130	153
Dining Room	139	3391	3043	125	146
Kitchen	126	440	1640	16	78
Breakfast	111	3572	2453	132	117
Utility	61	1556	1226	57	59
Master Bedroom	223	6819	5928	252	284
Master Closet	76	1215	404	45	19
Master Bath	150	2623	1065	97	51
Core	7	10	11	0	1
Entire House d	2106	42217	32548	1557	1557
Ventilation Air		0	0		
Equip. @ 0.98 RSM			31897		
Latent Cooling			6316		
TOTALS	2106	42217	38213	1557	1557

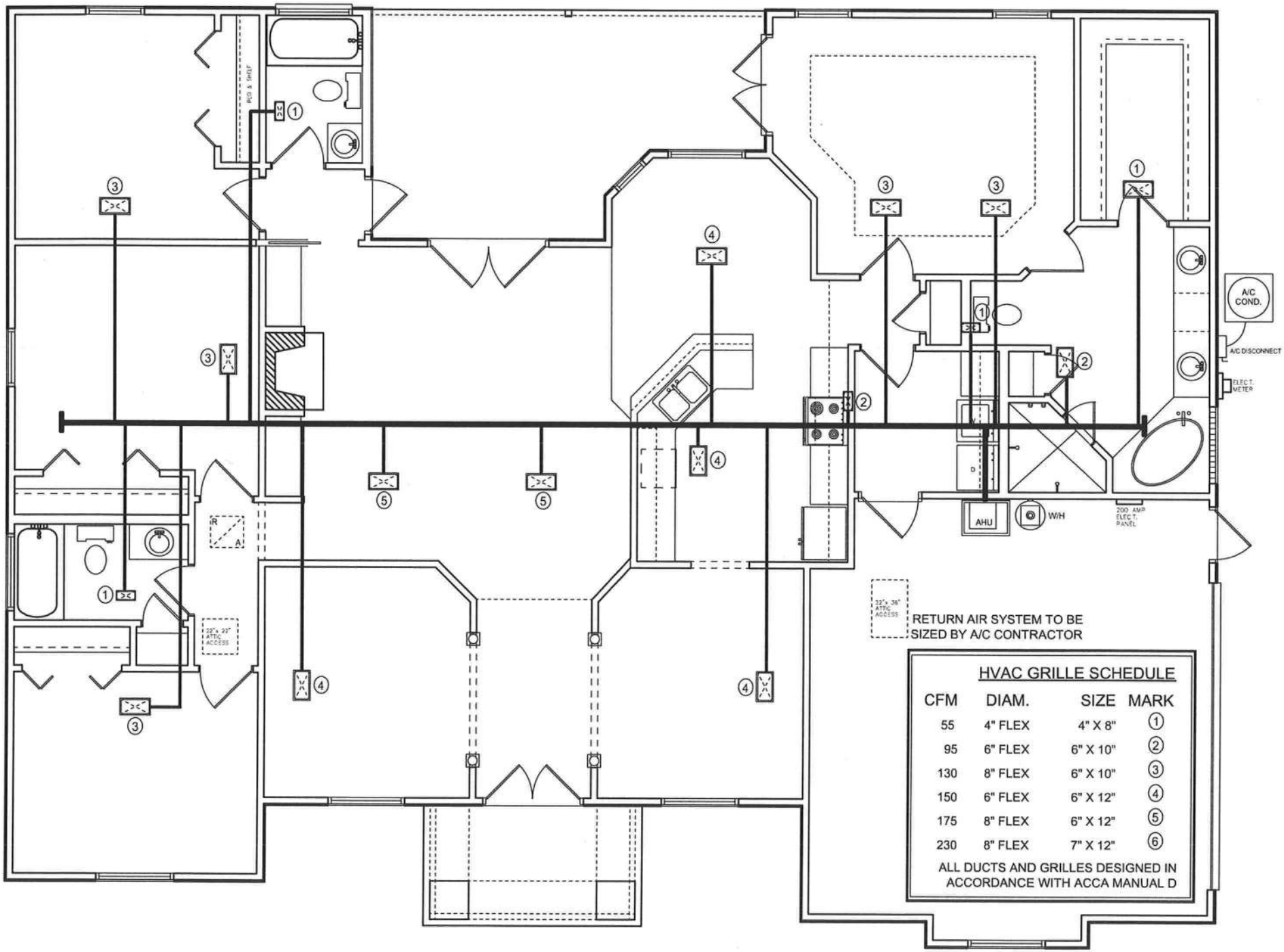

HVAC GRILLE SCHEDULE

CFM	DIAM.	SIZE	MARK
55	4" FLEX	4" X 8"	1
95	6" FLEX	6" X 10"	2
130	8" FLEX	6" X 10"	3
150	6" FLEX	6" X 12"	4
175	8" FLEX	6" X 12"	5
230	8" FLEX	7" X 12"	6

ALL DUCTS AND GRILLES DESIGNED IN ACCORDANCE WITH ACCA MANUAL D

HVAC PLAN

SCALE: NTS

78-2160

TAMKO ROOFING PRODUCTS

January 31, 2002

TO: OUR FLORIDA CUSTOMERS:

Effective February 1, 2002, the following TAMKO shingles, as manufactured at TAMKO's Tuscaloosa, Alabama, facility, comply with ASTM D-3161, Type I modified to 110 mph. Testing was conducted using four nails per shingle. These shingles also comply with Florida Building Code TAS 100 for wind driven rain.

- Glass-Seal AR
- Elite Glass-Seal AR
- ASTM Heritage 30 AR (formerly ASTM Heritage 25 AR)
- Heritage 40 AR (formerly Heritage 30 AR)
- Heritage 50 AR (formerly Heritage 40 AR)

All testing was performed by Florida State certified independent labs.

Please direct all questions to TAMKO's Technical Services Department at 1-800-641-4691.

TAMKO Roofing Products, Inc.

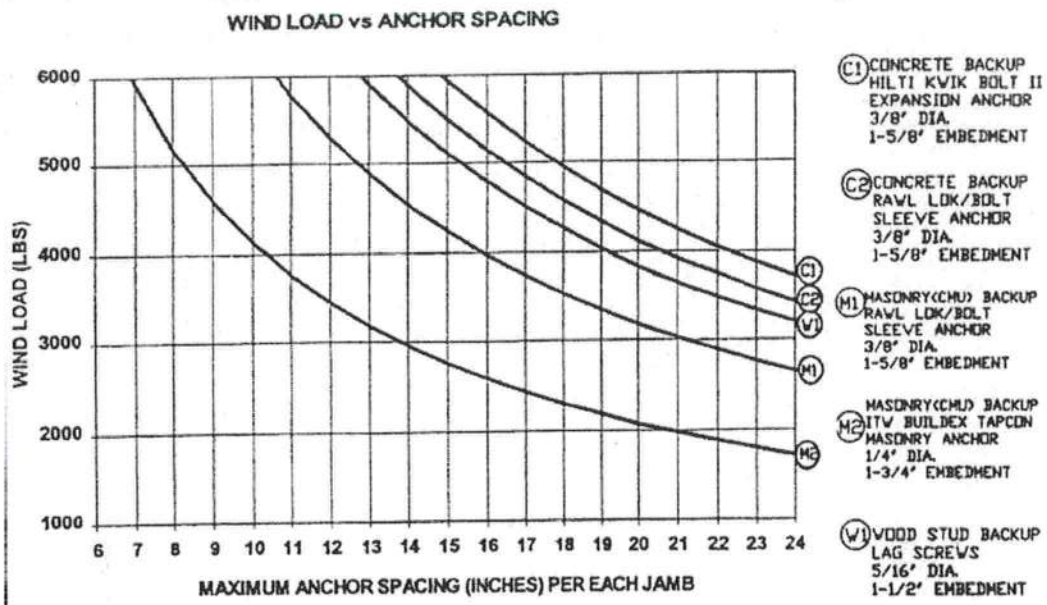

DESIGN LOAD $\frac{(LBS)}{FT^2}$ X GARAGE DOOR AREA(WIDTH-FT X HEIGHT-FT) = WIND LOAD(LBS)

EXAMPLE

$\frac{30\ LBS}{FT^2}$ X (16 FT WIDE X 8 FT HIGH) = 3840 LBS

- C1 USE 22" SPACING
- C2 USE 21" SPACING
- W1 USE 19" SPACING
- M1 USE 16" SPACING
- M2 USE 10" SPACING

SEE NOTE 11 FOR ADDITIONAL REQUIRED 2X6 WOOD JAMB ANCHORS

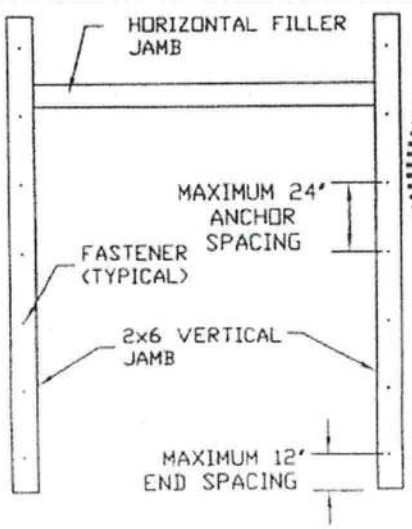

NORTH CAROLINA PROFESSIONAL SEAL PE No. 024280 ENGINEER NASER R KEYVAN

3/8/2002

NASER R KEYVAN NC 53774 STATE OF FLORIDA PROFESSIONAL ENGINEER

2x6 JAMB TO SUPPORTING STRUCTURE ATTACHMENT

2x6 PRESSURE TREATED (GRADE #2 OR BETTER SOUTHERN PINE) WOOD JAMB SHALL BE ANCHORED TO BUILDING WOOD FRAME, GROUTED AND REINFORCED CONCRETE MASONRY UNIT (CMU) WALLS OR COLUMNS, OR REINFORCED CONCRETE COLUMNS.

NOTES:

1) ALL DOOR OPENING SURROUNDING STRUCTURE TO BE DESIGNED BY REGISTERED ENGINEER OR ARCHITECT WITH DUE CONSIDERATION GIVEN TO INSTALLATIONS USING CENTER 'HURRICANE' POSTS.

2) ALL DOOR OPENING STRUCTURE AND FASTENERS TO COMPLY WITH ALL APPLICABLE CODES INCLUDING SBCCI 'STANDARD FOR HURRICANE RESISTANT RESIDENTIAL CONSTRUCTION: SSTD 10,' CURRENT EDITION.

3) ALL FASTENERS TO BE INSTALLED IN STRICT ACCORDANCE WITH MANUFACTURER'S SPECIFICATIONS, INSTRUCTIONS AND RECOMMENDATIONS.

4) WOOD FRAME BUILDINGS: STUDS AT EACH SIDE OF DOOR OPENING SHALL BE PROPERLY DESIGNED, CONNECTED, ANCHORED AND SHALL CONSIST OF A MINIMUM OF THREE (3) LAMINATIONS OF 2X6 PRESSURE TREATED SOUTHERN PINE (#2 GRADE OR BETTER) WALL STUDS CONTINUOUS FROM FOOTING TO DOUBLE TOP PLATE.

5) REINFORCED CMU OR CONCRETE: 2X6 WOOD JAMB SHALL BE ANCHORED TO SOLIDLY GROUTED AND REINFORCED CONCRETE MASONRY UNIT (CMU) WALLS OR COLUMNS, OR REINFORCED CONCRETE COLUMNS. ANCHOR SPACING AND EMBEDMENT IS BASED ON CONCRETE MASONRY UNITS COMPLYING WITH ASTM C90 WITH A MINIMUM NET AREA COMPRESSIVE STRENGTH OF 2150 PSI; GROUT WITH A MINIMUM COMPRESSIVE STRENGTH OF 2000 PSI; REINFORCED CONCRETE COLUMNS WITH A MINIMUM COMPRESSIVE STRENGTH OF 2500 PSI.

6) EMBEDMENTS LISTED ARE THE MINIMUM ALLOWABLE EMBEDMENTS.

7) ANCHORS FOR CONCRETE AND CONCRETE MASONRY UNITS (CMU) SHALL HAVE A MINIMUM 3" EDGE DISTANCE FROM ALL EDGES OF CONCRETE OR CONCRETE MASONRY UNITS. ANCHORS FOR CONCRETE AND CMU SHALL HAVE A MINIMUM SPACING OF 3-3/4"

8) LAG SCREWS SHALL BE CENTERED IN ONE OF THE 1-1/2" DIMENSION FACES OF THE TRIPLE 2X6 WALL STUDS.

9) WASHERS ARE REQUIRED ON ALL FASTENERS.

10) THE WIND LOAD VS. ANCHOR SPACING CHART IS FOR A MAXIMUM DOOR SIZE OF 18' X 8' AT A MAXIMUM 42 PSF DESIGN WIND LOAD.

11) FOR THE UPPER THREE INDIVIDUAL STEEL JAMB BRACKETS, BRACKETS SHALL BE CENTERED BETWEEN THE TWO CLOSEST 2X6 WOOD JAMB ANCHORS. IF THE STEEL JAMB BRACKET IS NOT CENTERED BETWEEN THE TWO CLOSEST 2X6 WOOD JAMB ANCHORS, ADD AN ADDITIONAL 2X6 WOOD JAMB ANCHOR NEAR THAT STEEL BRACKET TO INSURE THAT THE LOAD FROM THE STEEL BRACKET IS EQUALLY TRANSFERRED TO TWO WOOD JAMB ANCHORS.

GADCO®

GENERAL AMERICAN DOOR COMPANY
5050 BASELINE ROAD
MONTGOMERY, IL 60538

SCALE NONE	APPROVED BY:	DRAWN BY: DW
DATE 8-30-99		REVISED
DESCRIPTION JAMB TO STRUCTURE ATTACHMENT FOR WIND LOADED GARAGE DOORS		
	MASTER DRAWING NUMBER A10560	DRAWING NUMBER

REV.	DATE	BY	DESCRIPTION
A-A	11-10-00	DW	SEE E.C.N. 831

NOTES:

1. TESTED TO POSITIVE AND NEGATIVE 20 PSF DESIGN AND POSITIVE AND NEGATIVE 30 PSF TEST PRESSURES PER ASTM E-330
2. MAXIMUM SECTION HEIGHT= 21"
3. SECTION HEIGHTS OF 21.00" AND 19.50" ARE AVAILABLE AND MAY BE USED IN ANY COMBINATION TO ACHIEVE VARIOUS DOOR HEIGHTS.
4. WINDOWS MAY BE INSTALLED IN THE TOP SECTION. (AS TESTED WITH 1/8" DSB GLASS OR EQUIVALENT) OR IN THE SECTION IMMEDIATELY BELOW THE TOP SECTION.
5. MINIMUM LENGTH OF ROLLER STEM IS 5½" (7" AS TESTED)
6. THE STRUT PLACEMENT ON DOOR MUST BE CONSISTENT WITH THE DOOR SHOWN.
7. STRUTS SECURED AT ALL LOCATIONS WITH TEK SCREWS.
8. QUANTITY OF SIDE LOCKS CAN BE 0,1, OR (2 AS TESTED).
9. A DROP IN TYPE OF INSULATION IS OPTIONAL

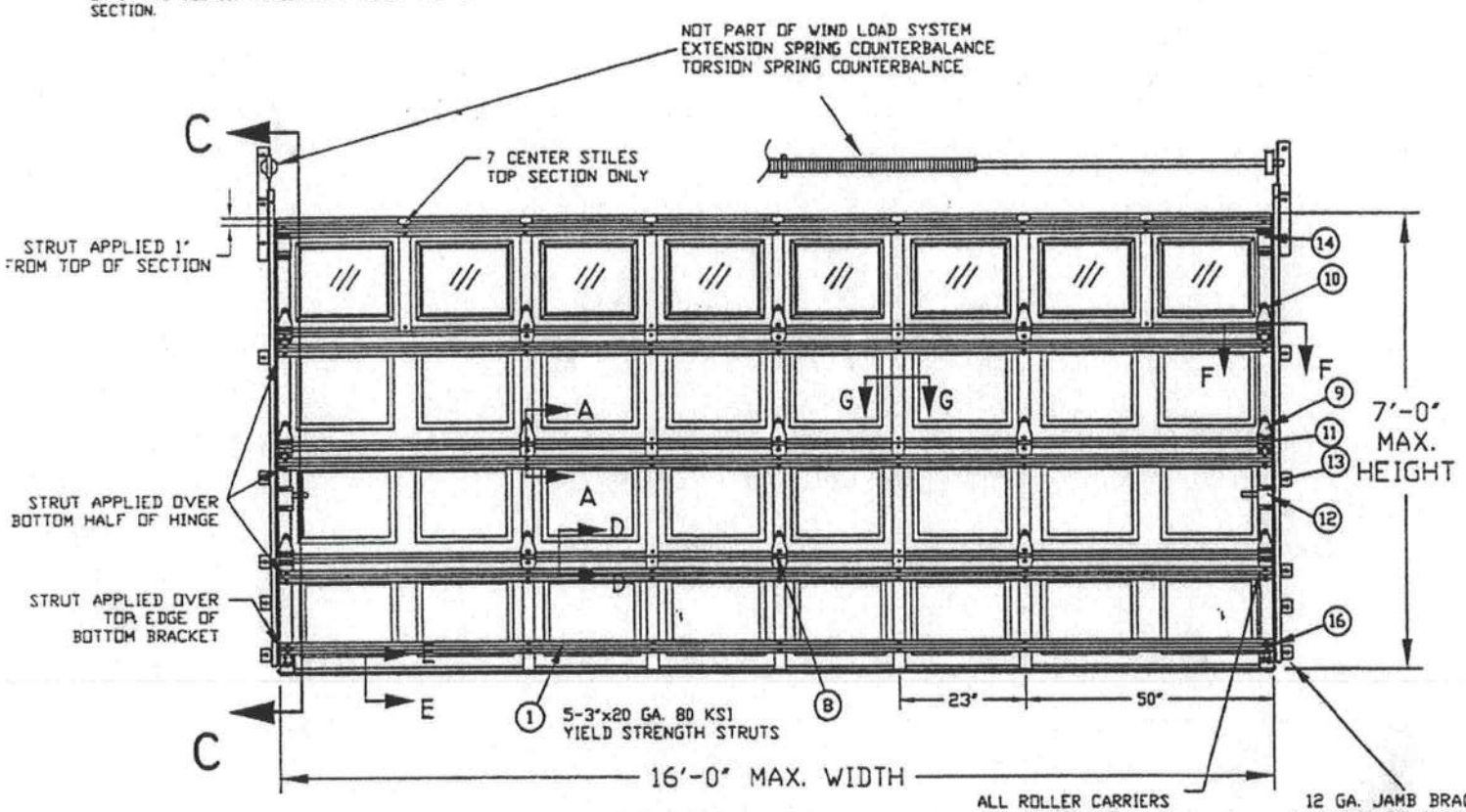

INSIDE ELEVATION

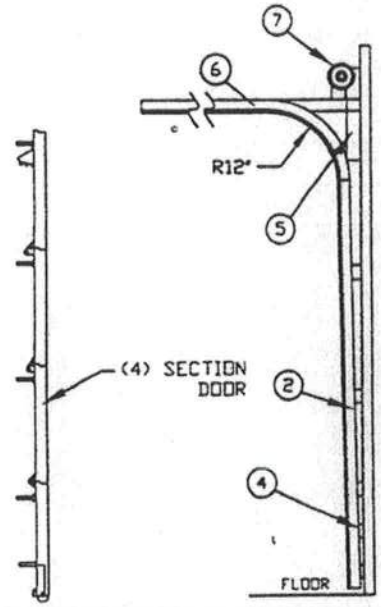

SEC C-C

VERTICAL TRACK, (16 GA.)

The seal on this drawing only certifies that the product(s) illustrated and described herein represent the configuration(s), dimensions and installation(s) of the door as tested.

NORTH CAROLINA PROFESSIONAL ENGINEER SEAL PE No. 024280 JASER R. REYVAN

LISTED SBCCI PST & ESI

REPORT No. 2202

TEST REPORTS ON FILE VIDEO 10/19/00 (00293)

DESIGN LOAD +20.0 PSF & -20.0 PSF
TEST LOAD +30.0 PSF & -30.0 PSF

GADCO DOORS
SERIES 7400, EXTERIOR STEEL =.017 MIN (AS TESTED)
SERIES 7825, EXTERIOR STEEL =.019" MIN
SERIES 7524, EXTERIOR STEEL =.024" MIN
(TESTED) WITH WINDOWS

MAXIMUM DOOR WIDTH	MAXIMUM DOOR HEIGHT	TYPICAL CTR. STILE SPACING	STRUTS 80 KSI SIZE	STRUTS 80 KSI QTY.	VERTICAL TRACK
16'	7'	23"	3"	5	2 IN.

GADCO®
GENERAL AMERICAN DOOR COMPANY
5050 BASELINE ROAD
MONTGOMERY, IL 60538

SCALE: 1:35 | APPROVED BY: | DRAWN BY: D. WIEDMAN
DATE: 10-20-00 | REVISED: (A) 11-10-00
DESCRIPTION: 16' X 7' MAX. RAISED PANEL STEEL DOOR -WINDLOAD ±20 PSF
PART NUMBER: PAGE 1 OF 2
DRAWING NUMBER: W13220-1

REV.	DATE	BY	DESCRIPTION
A1	11-27-00	DW	SEE ECN #34
A2	12-1-00	DW	SEE ECN #36

LISTED
SBCCI PST & ESI
REPORT No. 2202

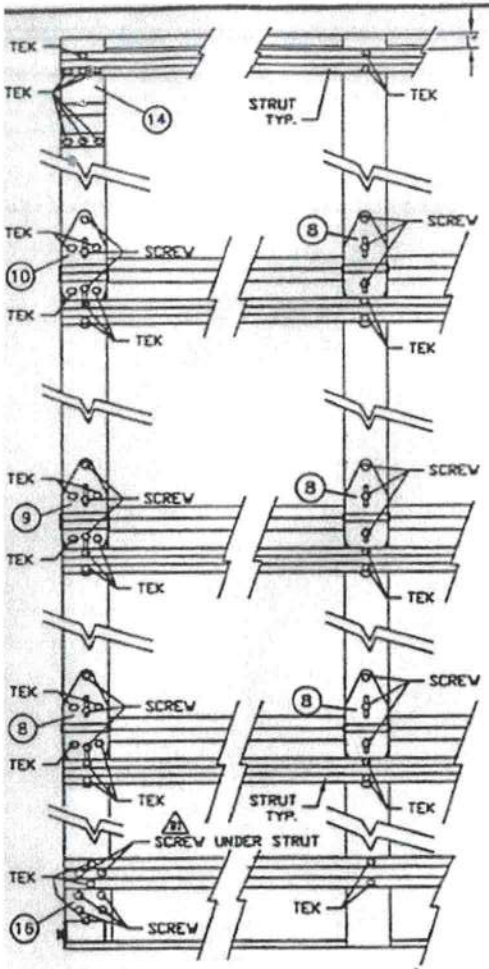

FASTENER ARRANGEMENT A1

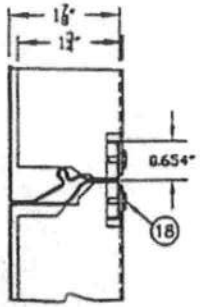

SEC D-D
PAN ATTACHMENT TO STILE (OPTIONAL)

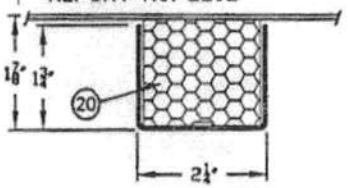

SEC G-G
CENTER STILE
20 GA. GALVANIZED

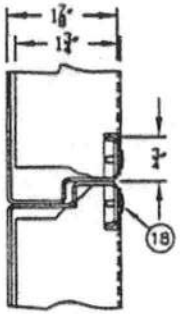

SEC D-D
PAN ATTACHMENT TO STILE (AS TESTED)

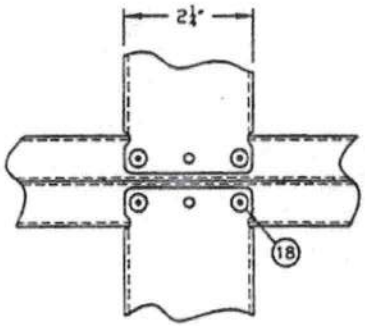

PAN ATTACHMENT TO STILE

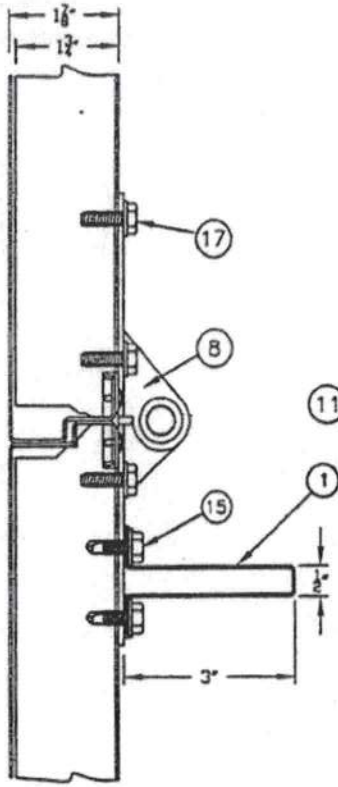

SEC A-A

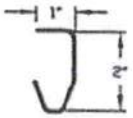

TRACK
16 GA. (.055 MIN.)

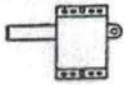

(12) SIDE LOCK

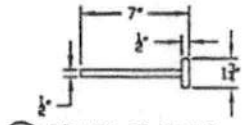

(11) ROLLER 10 BALLS

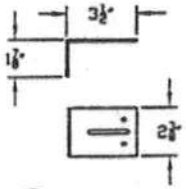

(4) #6 JAMB BRACKET

(17) 1/4-20 X 3/4" HEX WASHERHEAD SCREW

(15) 1/4-20 X 3/4" HWH TEK SCREW WITH #2 REDUCED POINT

2x6 PRESSURE TREATED LUMBER (GRADE #2 OR BETTER SOUTHERN PINE)

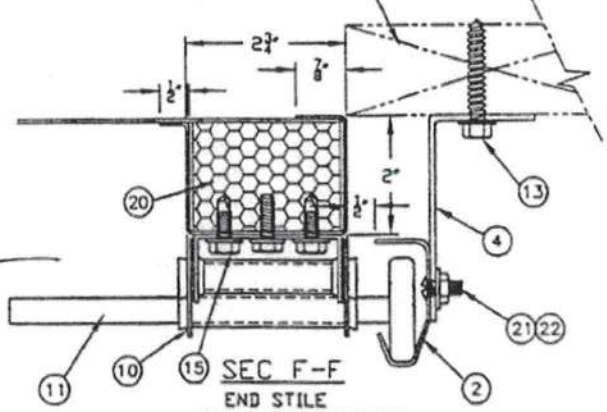

SEC F-F
END STILE
20 GA. PAINTED STEEL

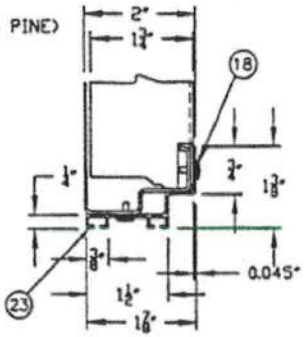

SEC E-E

ITEM	PART NO.	DESCRIPTION
23	3485	BOTTOM RAIL 6063 T6 ALUM EXT.
22	1391	1/4"-20 X 5/8" RIBBED NECK SCREW
21	4044	1/4"-20 SERRATED FLANGE NUT
20		1 LB DENSITY FILLER BLOCK EPS
19		
18	4385	POP RIVET, 5/32" STEEL
17	4229	HEX WASHERHEAD SCREW 1/4"-20 X 3/4"
16	1399L&R	BOTTOM ROLLER BRACKET
15	0138	HWH TEK SCREW 1/4-20 X 3/4 W/ REDUCED PT.
14	3875	TOP SUPPORT BRACKET
13	4043	5/16" X 1-5/8" LAG SCREW
12	4710	SIDE LOCK
11	4306	LONG STEM ROLLER 2"
10	4203	ROLLER CARRIER HINGE #3 (14 GA)
9	4202	ROLLER CARRIER HINGE #2 (14 GA)
8	4201	ROLLER CARRIER HINGE #1 (14 GA)
7		COUNTER BALANCE (TORSION BAR & SPRINGS)
6		HORIZONTAL TRACK & ANGLE (16 GA)
5		VERTICAL FLAG ANGLE
4	4585-6	TRACK BRACKET #6 (12 GA)
3		
2		VERTICAL TRACK (16 GA)
1		3" HEMMED STRUT(20 GA) MIN. YIELD STR. 80KSI

GADCO
GENERAL AMERICAN DOOR COMPANY
5050 BASELINE ROAD
MONTGOMERY, IL 60538

SCALE NONE	APPROVED BY:	DRAWN BY: D. VIEDMAN
DATE 11-7-00		REVISED (B) 12-1-00

DESCRIPTION
16' X 7' MAX. RAISED PANEL STEEL DOOR-WINDLOAD ±20 PSF

PAGE 2 OF 2

DRAWING NUMBER W13220-2

NORTH CAROLINA PROFESSIONAL SEAL PE No. 024280 ENGINEER NASERIAN KEYVAN

The seal on this drawing only certifies that the product(s) illustrated and described herein represent the configuration(s), dimensions and installation(s) of the door as tested.

INSWING UNIT WITH DOUBLE DOOR

TYPICAL HINGE ATTACHMENT

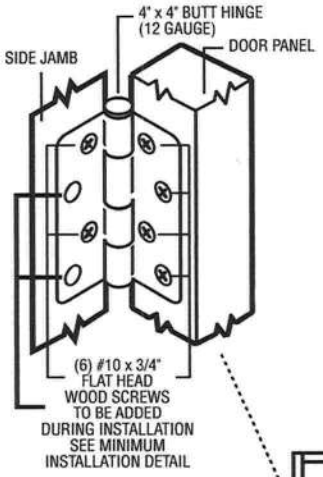

TYPICAL ASTRAGAL PROFILES

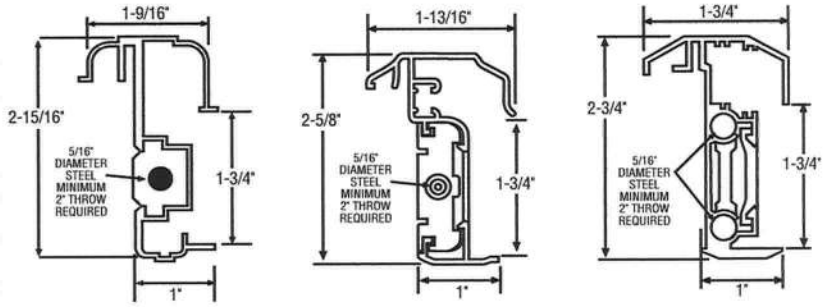

ALUMINUM EXTRUDED ASTRAGAL (0.06" MINIMUM WALL THICKNESS) WITH ADDED REINFORCEMENT INSERTS AT TOP EXTENSION BOLT, BOTTOM EXTENSION BOLT AND CYLINDERICAL/DEADBOLT LATCHING LOCATIONS. ATTACH WITH #8 X 1" PAN HEAD SCREWS – LOCATE 1" FROM EACH END MINIMUM AND 22" O.C. MAXIMUM.

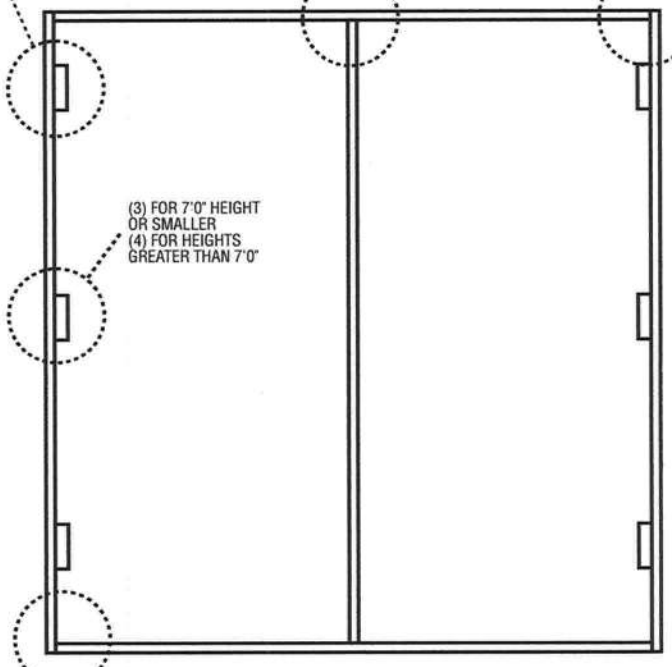

TYPICAL HEADER & SIDE JAMB ATTACHMENT

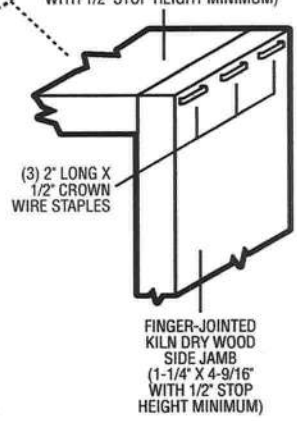

TYPICAL THRESHOLD & SIDE JAMB ATTACHMENT

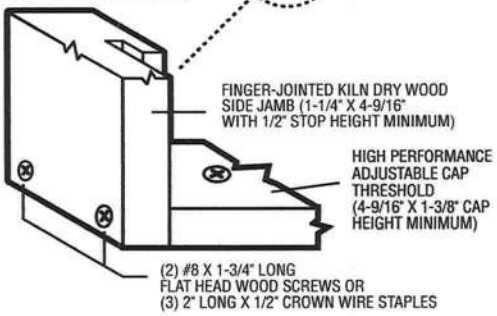

Warnock Hersey

Test Data Review Certificate #3026447A; #3026447B; #3026447C and COP/Test Report Validation Matrix #3026447A-001, 002, 003; #3026447B-001, 002, 003; #3026447C-001, 002, 003 provides additional information - available from the ITS/WH website (www.etlsemko.com), the Masonite website (www.masonite.com) or the Masonite technical center.

PREMDOR Collection
Premium Quality Doors
Exclusively from
Masonite®
Masonite International Corporation

June 17, 2002
Our continuing program of product improvement makes specifications, design and product detail subject to change without notice.

FIBERGLASS DOORS

Glazed Units

6'8" Height – Inswing

Arrangement	Singles (width)	Masonite International	Miami-Dade BCCO	DP Rating	Impact Rated
X	2'0"	COP-WL-MA0141-02	02-0419.08 (Application Filed)	52.0	NO
	2'6"				
	2'8"				
	2'10"				
	3'0"				
	3'6"	Not Listed	Not Listed	–	–
Arrangement	**Multiples (width)**	**Masonite International**	**Miami-Dade BCCO**	**DP Rating**	**Impact Rated**
XO, OX, OXO	2'8" + 1'0"	COP-WL-MA0143-02	02-0419.08 (Application Filed)	52.0	NO
	2'8" + 1'2"				
	2'10" + 1'0"				
	2'10" + 1'2"				
	3'0" + 1'0"				
	3'0" + 1'2"				
	1'0" + 2'8" + 1'0"	COP-WL-MA0144-02	02-0419.08 (Application Filed)	52.0	NO
	1'0" + 2'10" + 1'0"				
	1'2" + 2'8" + 1'2"				
	1'0" + 2'8" + 1'0"				
	1'0" + 3'0" + 1'0"				
	1'2" + 2'10" + 1'2"				
	1'2" + 3'0" + 1'2"				
	2'6" + 2'6" + 2'6"				
	2'8" + 2'8" + 2'8"				
	2'10" + 2'10" + 2'10"				
	3'0" + 3'0" + 3'0"				
XX, OXXO	2'6" + 2'6"	COP-WL-MA0142-02	02-0419.08 (Application Filed)	52.0	NO
	2'8" + 2'8"				
	2'10" + 2'10"				
	3'0" + 3'0"				
	2'6" + 2'6" + 2'6" + 2'6"	COP-WL-MA0145-02	02-0419.08 (Application Filed)	52.0	NO
	2'8" + 2'8" + 2'8" + 2'8"				
	2'10" + 2'10" + 2'10" + 2'10"				
	3'0" + 3'0" + 3'0" + 3'0"				

Notes:

1. Door arrangements using fewer panels than what is shown in the above chart also comply under the product approvals shown.
2. Assembly details are available from the Masonite International website (www.masonite.com) or from the technical center.
3. Installation instructions are available from the Masonite International website (www.masonite.com) or from the technical center.
4. Actual design pressure requirement for a specific building design & geographic location is determined by ASCE 7 (Minimum design loads for buildings and other structures). National, state or local building codes specify the edition required.
5. Masonite International structural, cyclic, air, water, forced entry/or impact testing is done in accordance with Miami-Dade BCCO protocol PA201, PA202 & PA203.

Warnock Hersey

Test Data Review Certificate #3026447A; #3026447B; #3026447C and COP/Test Report Validation Matrix #3026447A-001, 002, 003; #3026447B-001, 002, 003; #3026447C-001, 002, 003 provides additional information - available from the ITS/WH website (www.etlsemko.com), the Masonite website (www.masonite.com) or the Masonite technical center.

Oakcraft™ Wood-grain Textured FIBERGLASS ENTRY DOORS

ARTEK™ Non-Textured Fiberglass Entry Doors

PREMDOR Collection Premium Quality Doors

Exclusively from Masonite® Masonite International Corporation

June 17, 2002

Our continuing program of product improvement makes specifications, design and product detail subject to change without notice.

OXO
Unit

MAD-WL-MA0007-02

INSWING UNIT WITH SINGLE DOOR & TWO SIDELITES (BOXED CONSTRUCTION)

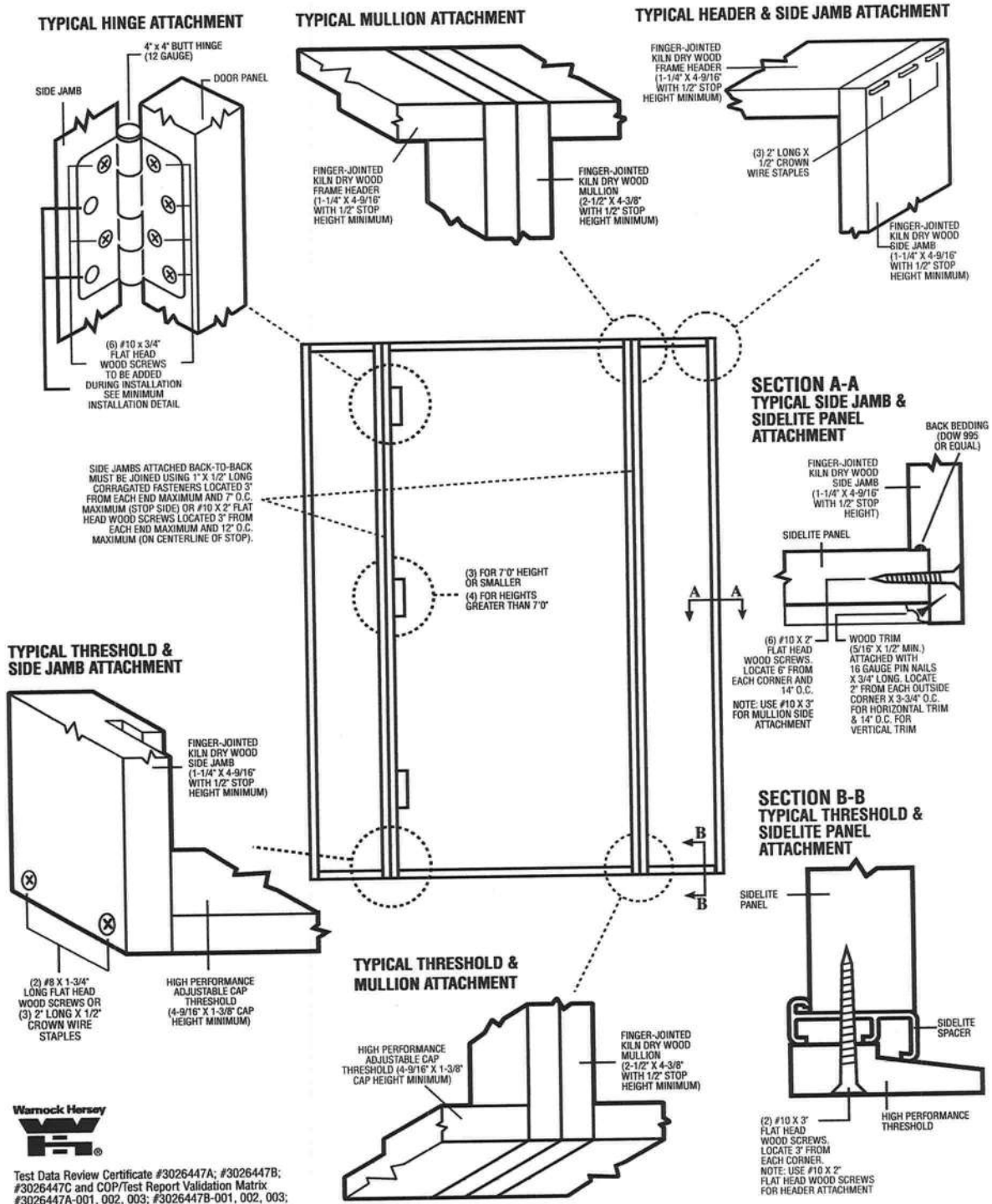

Warnock Hersey

Test Data Review Certificate #3026447A; #3026447B; #3026447C and COP/Test Report Validation Matrix #3026447A-001, 002, 003; #3026447B-001, 002, 003; #3026447C-001, 002, 003 provides additional information - available from the ITS/WH website (www.etlsemko.com), the Masonite website (www.masonite.com) or the Masonite technical center.

PREMDOOR Collection Premium Quality Doors

Exclusively from Masonite®
Masonite International Corporation

June 17, 2002
Our continuing program of product improvement makes specifications, design and product detail subject to change without notice.

OUTSWING UNITS WITH SINGLE DOOR

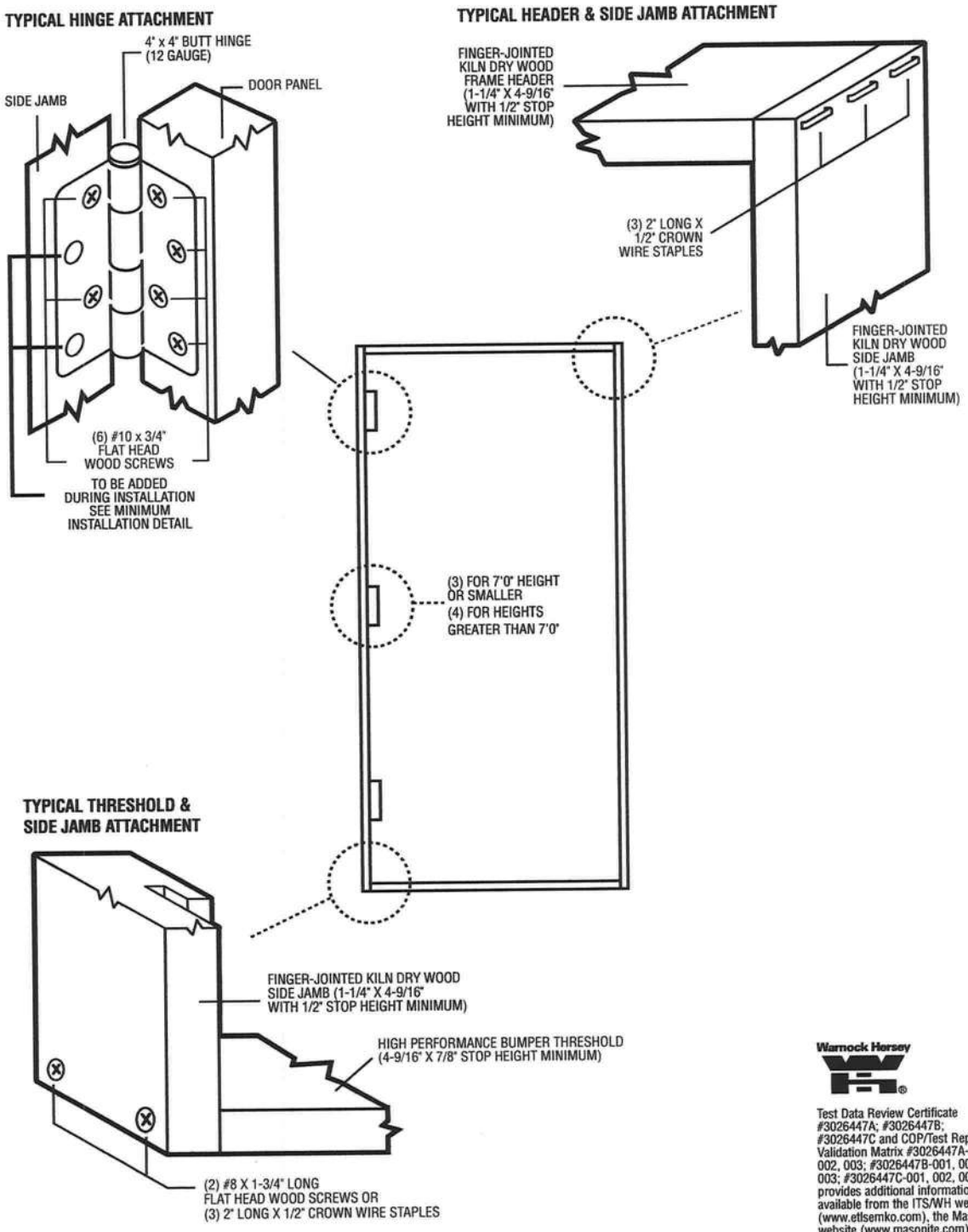

Warnock Hersey

Test Data Review Certificate #3026447A; #3026447B; #3026447C and COP/Test Report Validation Matrix #3026447A-001, 002, 003; #3026447B-001, 002, 003; #3026447C-001, 002, 003 provides additional information - available from the ITS/WH website (www.etlsemko.com), the Masonite website (www.masonite.com) or the Masonite technical center.

PREMDOR Collection Premium Quality Doors
Exclusively from Masonite®
Masonite International Corporation

June 17, 2002
Our continuing program of product improvement makes specifications, design and product detail subject to change without notice.

INSWING UNIT WITH SINGLE DOOR

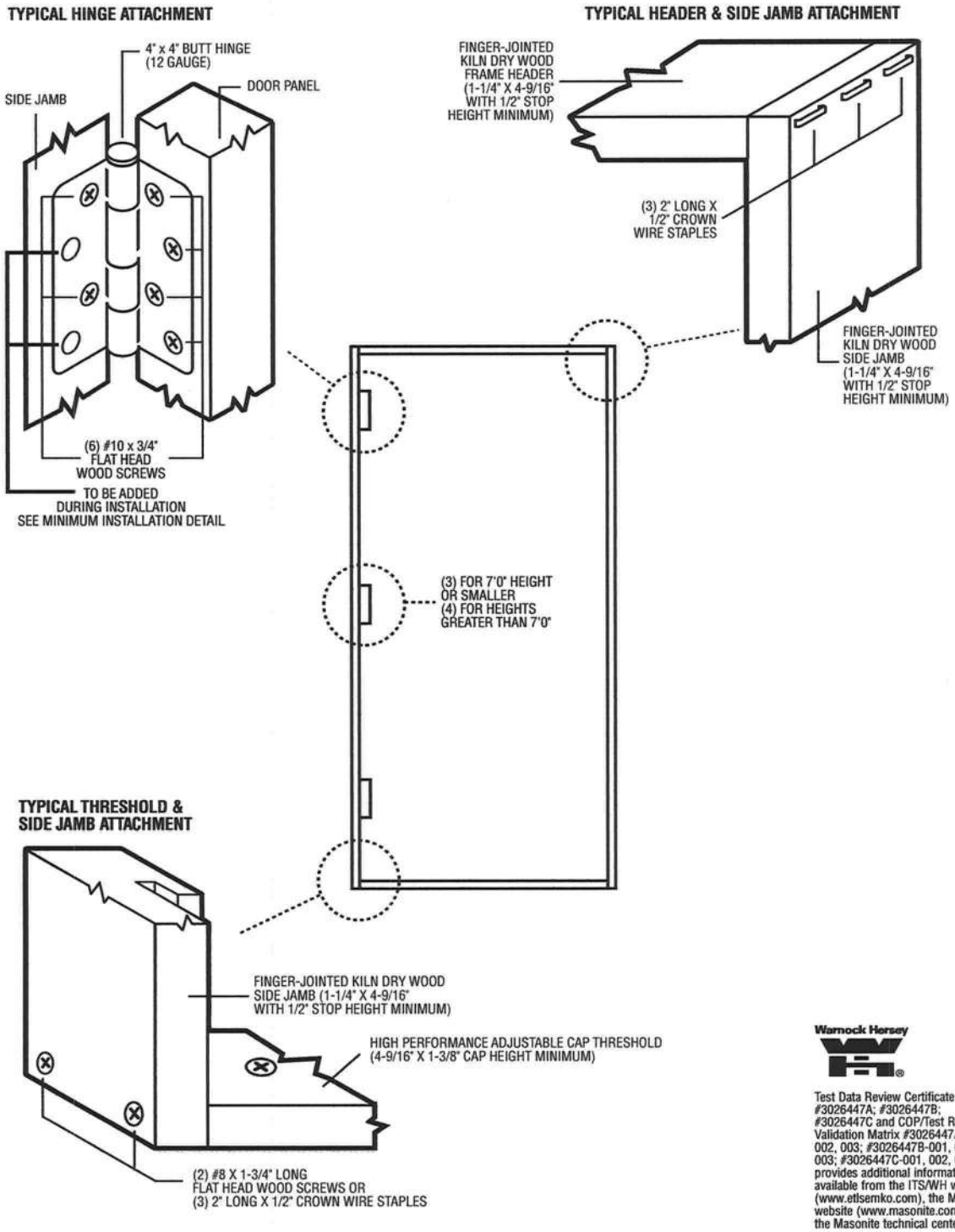

Warnock Hersey

Test Data Review Certificate #3026447A; #3026447B; #3026447C and COP/Test Report Validation Matrix #3026447A-001, 002, 003; #3026447B-001, 002, 003; #3026447C-001, 002, 003 provides additional information - available from the ITS/WH website (www.etlsemko.com), the Masonite website (www.masonite.com) or the Masonite technical center.

June 17, 2002
Our continuing program of product improvement makes specifications, design and product detail subject to change without notice.

PREMDOR Collection Premium Quality Doors
Exclusively from Masonite®
Masonite International Corporation

GLASS INSERT IN DOOR OR SIDELITE PANEL

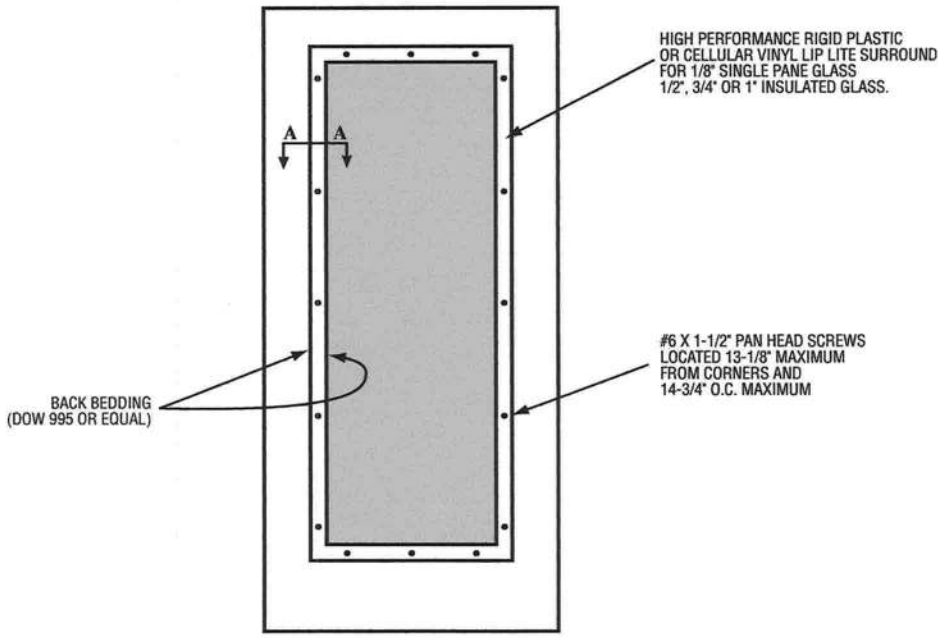

SECTION A-A
TYPICAL RIGID PLASTIC LIP LITE SURROUND

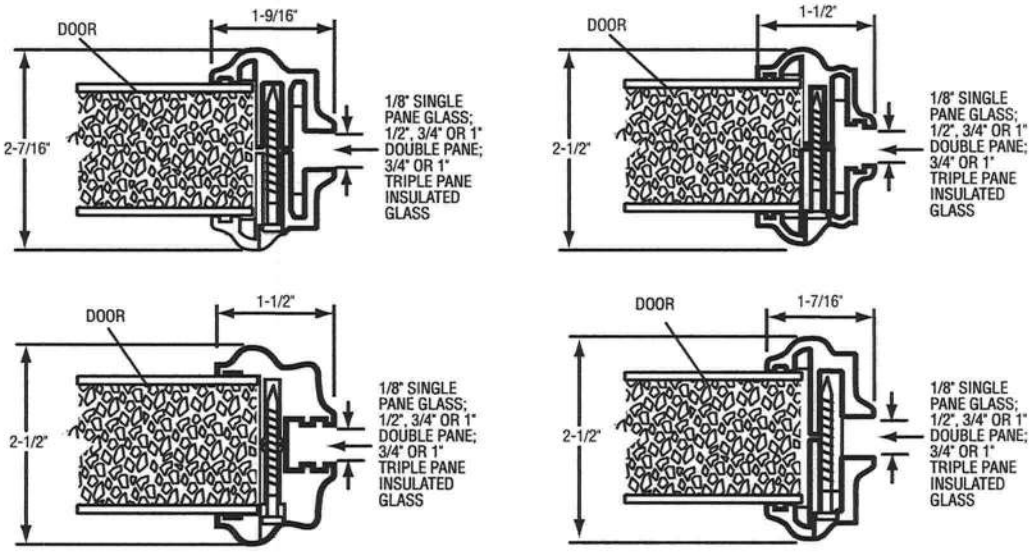

*Glass inserts to be sub-listed by Intertek Testing Services/ETL Semko or approved validation service.

Warnock Hersey

Test Data Review Certificate #3026447A; #3026447B; #3026447C and COP/Test Report Validation Matrix #3026447A-001, 002, 003; #3026447B-001, 002, 003; #3026447C-001, 002, 003 provides additional information - available from the ITS/WH website (www.etlsemko.com), the Masonite website (www.masonite.com) or the Masonite technical center.

June 17, 2002

Our continuing program of product improvement makes specifications, design and product detail subject to change without notice.

PREMDOR Collection Premium Quality Doors

Exclusively from Masonite®

Masonite International Corporation

MAD-WL-MA0012-02

OUTSWING UNITS WITH DOUBLE DOOR

TYPICAL HINGE ATTACHMENT

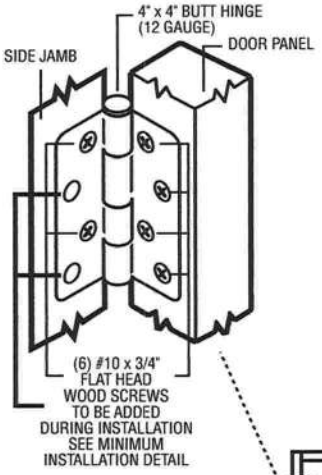

TYPICAL ASTRAGAL PROFILES

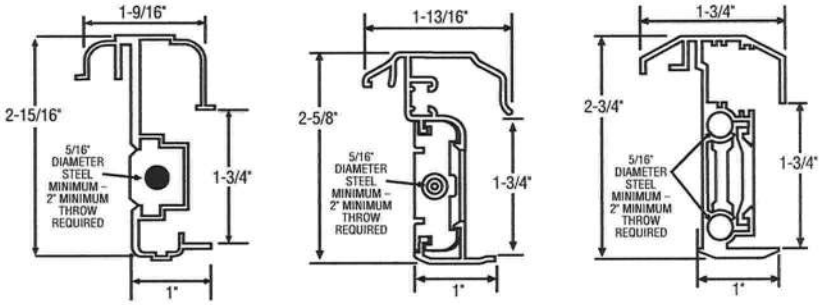

ALUMINUM EXTRUDED ASTRAGAL (0.06" MINIMUM WALL THICKNESS) WITH ADDED REINFORCEMENT INSERTS AT TOP EXTENSION BOLT, BOTTOM EXTENSION BOLT AND CYLINDERICAL/DEADBOLT LATCHING LOCATIONS. ATTACH WITH #8 X 1" PAN HEAD SCREWS – LOCATE 1" FROM EACH END MINIMUM AND 22" O.C. MAXIMUM.

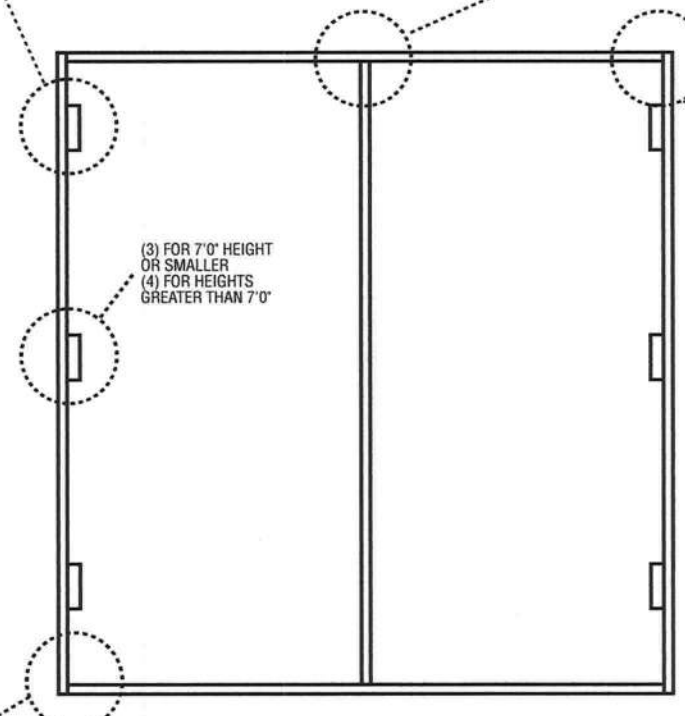

TYPICAL HEADER & SIDE JAMB ATTACHMENT

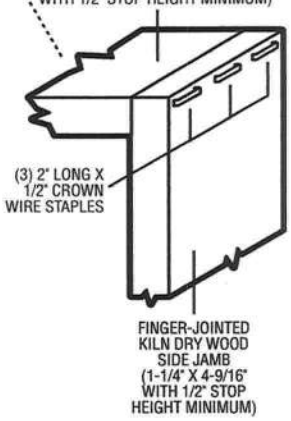

TYPICAL THRESHOLD & SIDE JAMB ATTACHMENT

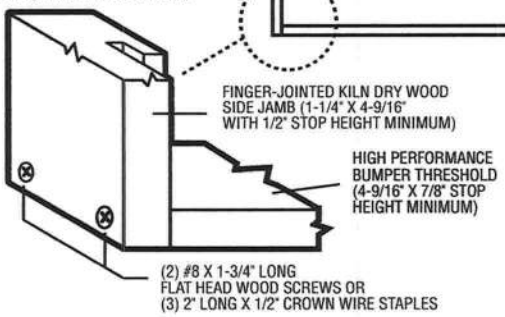

Warnock Hersey

Test Data Review Certificate #3026447A; #3026447B; #3026447C and COP/Test Report Validation Matrix #3026447A-001, 002, 003; #3026447B-001, 002, 003; #3026447C-001, 002, 003 provides additional information - available from the ITS/WH website (www.etisemko.com), the Masonite website (www.masonite.com) or the Masonite technical center.

June 17, 2002
Our continuing program of product improvement makes specifications, design and product detail subject to change without notice.

PREMDOR Collection
Premium Quality Doors
Exclusively from
Masonite®
Masonite International Corporation

INSWING UNIT WITH DOUBLE DOOR

TYPICAL HINGE ATTACHMENT

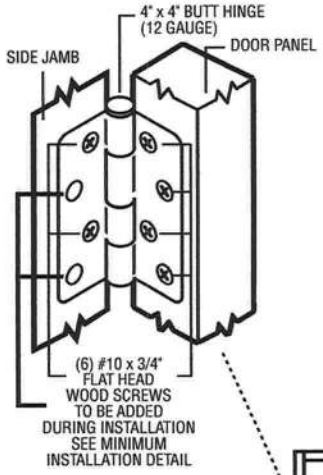

TYPICAL ASTRAGAL PROFILES

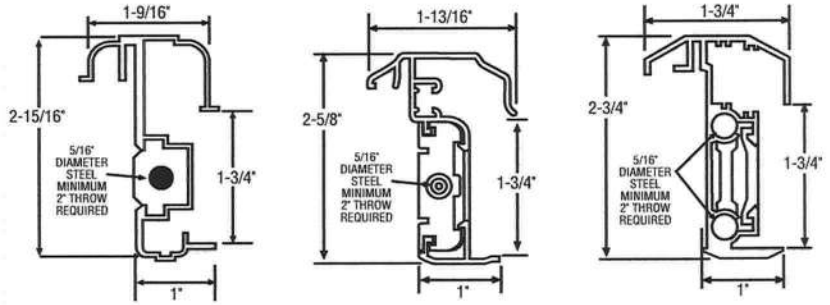

ALUMINUM EXTRUDED ASTRAGAL (0.06" MINIMUM WALL THICKNESS) WITH ADDED REINFORCEMENT INSERTS AT TOP EXTENSION BOLT, BOTTOM EXTENSION BOLT AND CYLINDERICAL/DEADBOLT LATCHING LOCATIONS. ATTACH WITH #8 X 1" PAN HEAD SCREWS – LOCATE 1" FROM EACH END MINIMUM AND 22" O.C. MAXIMUM.

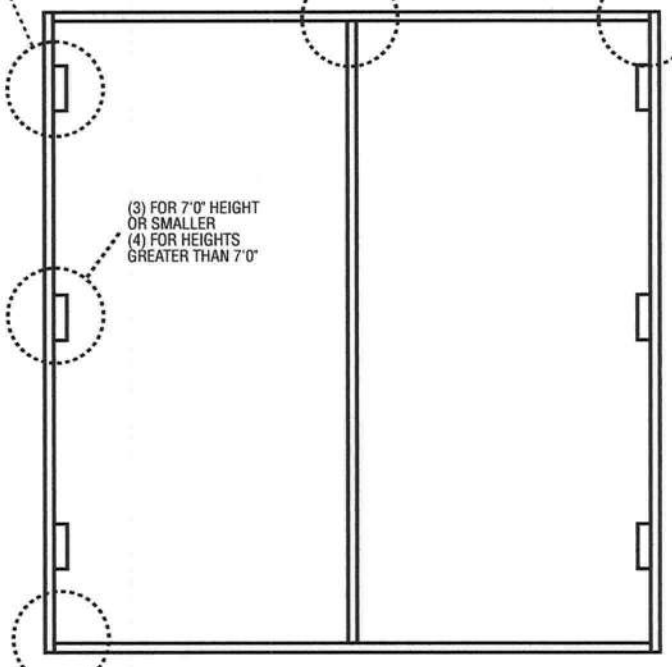

TYPICAL HEADER & SIDE JAMB ATTACHMENT

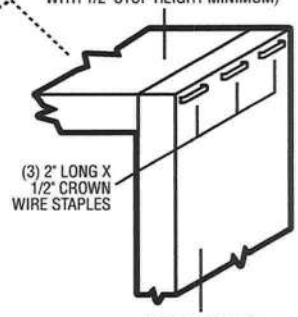

TYPICAL THRESHOLD & SIDE JAMB ATTACHMENT

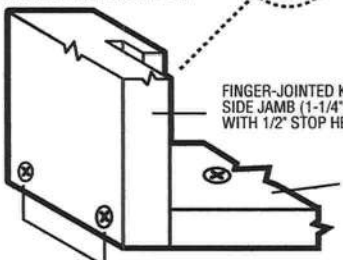

Warnock Hersey

Test Data Review Certificate #3026447A; #3026447B; #3026447C and COP/Test Report Validation Matrix #3026447A-001, 002, 003; #3026447B-001, 002, 003; #3026447C-001, 002, 003 provides additional information - available from the ITS/WH website (www.etlsemko.com), the Masonite website (www.masonite.com) or the Masonite technical center.

PREMDOR Collection
Premium Quality Doors
Exclusively from
Masonite®
Masonite International Corporation

June 17, 2002
Our continuing program of product improvement makes specifications, design and product detail subject to change without notice.

FIBERGLASS DOORS

Opaque Units

8'0" Height – Outswing

Arrangement	Singles (width)	Masonite International	Miami-Dade BCCO	DP Rating	Impact Rated
X	2'0"	COP-WL-MA0126-02	02-0109.07 (Application Filed)	70.0	NO
	2'6"				
	2'8"				
	2'10"				
	3'0"				
	3'6"	Not Listed	Not Listed	–	–
Arrangement	**Multiples (width)**	**Masonite International**	**Miami-Dade BCCO**	**DP Rating**	**Impact Rated**
XO, OX, OXO	2'8" + 1'0"	COP-WL-MA0128-02	02-0109.07 (Application Filed)	55.0	NO
	2'8" + 1'2"				
	2'10" + 1'0"				
	2'10" + 1'2"				
	3'0" + 1'0"				
	3'0" + 1'2"				
	1'0" + 2'8" + 1'0"	COP-WL-MA0129-02	02-0109.07 (Application Filed)	55.0	NO
	1'0" + 2'10" + 1'0"				
	1'2" + 2'8" + 1'2"				
	1'0" + 2'8" + 1'0"				
	1'0" + 3'0" + 1'0"				
	1'2" + 2'10" + 1'2"				
	1'2" + 3'0" + 1'2"				
	2'6" + 2'6" + 2'6"	Not Listed	Not Listed	–	–
	2'8" + 2'8" + 2'8"				
	2'10" + 2'10" + 2'10"				
	3'0" + 3'0" + 3'0"				
XX, OXXO	2'6" + 2'6"	COP-WL-MA0127-02	02-0109.07 (Application Filed)	55.0	NO
	2'8" + 2'8"				
	2'10" + 2'10"				
	3'0" + 3'0"				
	1'2" + 2'6" + 2'6" + 1'2"	COP-WL-MA0130-02	02-0109.07 (Application Filed)	55.0	NO
	1'2" + 2'8" + 2'8" + 1'2"				
	1'2" + 2'10" + 2'10" + 1'2"				
	1'2" + 3'0" + 3'0" + 1'2"				

Notes:

1. Door arrangements using fewer panels than what is shown in the above chart also comply under the product approvals shown.
2. Assembly details are available from the Masonite International website (www.masonite.com) or from the technical center.
3. Installation instructions are available from the Masonite International website (www.masonite.com) or from the technical center.
4. Actual design pressure requirement for a specific building design & geographic location is determined by ASCE 7 (Minimum design loads for buildings and other structures). National, state or local building codes specify the edition required.
5. Masonite International structural, cyclic, air, water, forced entry/or impact testing is done in accordance with Miami-Dade BCCO protocol PA201, PA202 & PA203.

Warnock Hersey

Test Data Review Certificate #3026447A; #3026447B; #3026447C and COP/Test Report Validation Matrix #3026447A-001, 002, 003; #3026447B-001, 002, 003; #3026447C-001, 002, 003 provides additional information - available from the ITS/WH website (www.etlsemko.com), the Masonite website (www.masonite.com) or the Masonite technical center.

Oakcraft Wood-grain Textured FIBERGLASS ENTRY DOORS

ARTEK™ Non-Textured Fiberglass Entry Doors

June 17, 2002

Our continuing program of product improvement makes specifications, design and product detail subject to change without notice.

PREMDOOR Collection Premium Quality Doors

Exclusively from Masonite® Masonite International Corporation

FIBERGLASS DOORS

Opaque Units

8'0" Height – Inswing

Arrangement	Singles (width)	Masonite International	Miami-Dade BCCO	DP Rating	Impact Rated
X	2'0"	COP-WL-MA0106-02	02-0109.08 (Application Filed)	70.0	NO
	2'6"				
	2'8"				
	2'10"				
	3'0"				
	3'6"	Not Listed	Not Listed	–	–
Arrangement	**Multiples (width)**	**Masonite International**	**Miami-Dade BCCO**	**DP Rating**	**Impact Rated**
XO, OX, OXO	2'8" + 1'0"	COP-WL-MA0108-02	02-0109.08 (Application Filed)	55.0	NO
	2'8" + 1'2"				
	2'10" + 1'0"				
	2'10" + 1'2"				
	3'0" + 1'0"				
	3'0" + 1'2"				
	1'0" + 2'8" + 1'0"	COP-WL-MA0109-02	02-0109.08 (Application Filed)	55.0	NO
	1'0" + 2'10" + 1'0"				
	1'2" + 2'8" + 1'2"				
	1'0" + 2'8" + 1'0"				
	1'0" + 3'0" + 1'0"				
	1'2" + 2'10" + 1'2"				
	1'2" + 3'0" + 1'2"				
	2'6" + 2'6" + 2'6"	Not Listed	Not Listed	–	–
	2'8" + 2'8" + 2'8"				
	2'10" + 2'10" + 2'10"				
	3'0" + 3'0" + 3'0"				
XX, OXXO	2'6" + 2'6"	COP-WL-MA0107-02	02-0109.08 (Application Filed)	55.0	NO
	2'8" + 2'8"				
	2'10" + 2'10"				
	3'0" + 3'0"				
	1'2" + 2'6" + 2'6" + 1'2"	COP-WL-MA0110-02	02-0109.08 (Application Filed)	55.0	NO
	1'2" + 2'8" + 2'8" + 1'2"				
	1'2" + 2'10" + 2'10" + 1'2"				
	1'2" + 3'0" + 3'0" + 1'2"				

Notes:

1. Door arrangements using fewer panels than what is shown in the above chart also comply under the product approvals shown.
2. Assembly details are available from the Masonite International website (www.masonite.com) or from the technical center.
3. Installation instructions are available from the Masonite International website (www.masonite.com) or from the technical center.
4. Actual design pressure requirement for a specific building design & geographic location is determined by ASCE 7 (Minimum design loads for buildings and other structures). National, state or local building codes specify the edition required.
5. Masonite International structural, cyclic, air, water, forced entry/or impact testing is done in accordance with Miami-Dade BCCO protocol PA201, PA202 & PA203.

Warnock Hersey

Test Data Review Certificate #3026447A; #3026447B; #3026447C and COP/Test Report Validation Matrix #3026447A-001, 002, 003; #3026447B-001, 002, 003; #3026447C-001, 002, 003 provides additional information - available from the ITS/WH website (www.etlsemko.com), the Masonite website (www.masonite.com) or the Masonite technical center.

Oakcraft Wood-grain Textured FIBERGLASS ENTRY DOORS

ARTEK Non-Textured Fiberglass Entry Doors

June 17, 2002

Our continuing program of product improvement makes specifications, design and product detail subject to change without notice.

PREMDOR Collection Premium Quality Doors

Exclusively from Masonite® Masonite International Corporation

FIBERGLASS DOORS

Opaque Units

6'8" Height – Outswing

Arrangement	Singles (width)	Masonite International	Miami-Dade BCCO	DP Rating	Impact Rated
X	2'0"	COP-WL-MA0121-02	01-1031.02	76.0	NO
	2'6"				
	2'8"				
	2'10"				
	3'0"				
	3'6"	Not Listed	Not Listed	–	–
Arrangement	**Multiples (width)**	**Masonite International**	**Miami-Dade BCCO**	**DP Rating**	**Impact Rated**
XO, OX, OXO	2'8" + 1'0"	COP-WL-MA0123-02	02-0109.09 (Application Filed)	55.0	NO
	2'8" + 1'2"				
	2'10" + 1'0"				
	2'10" + 1'2"				
	3'0" + 1'0"				
	3'0" + 1'2"				
	1'0" + 2'8" + 1'0"	COP-WL-MA0124-02	02-0109.09 (Application Filed)	55.0	NO
	1'0" + 2'10" + 1'0"				
	1'2" + 2'8" + 1'2"				
	1'0" + 2'8" + 1'0"				
	1'0" + 3'0" + 1'0"				
	1'2" + 2'10" + 1'2"				
	1'2" + 3'0" + 1'2"				
	2'6" + 2'6" + 2'6"	Not Listed	Not Listed	–	–
	2'8" + 2'8" + 2'8"				
	2'10" + 2'10" + 2'10"				
	3'0" + 3'0" + 3'0"				
XX, OXXO	2'6" + 2'6"	COP-WL-MA0122-02	02-0109.09 (Application Filed)	55.0	NO
	2'8" + 2'8"				
	2'10" + 2'10"				
	3'0" + 3'0"				
	1'2" + 2'6" + 2'6" + 1'2"	COP-WL-MA0125-02	02-0109.09 (Application Filed)	55.0	NO
	1'2" + 2'8" + 2'8" + 1'2"				
	1'2" + 2'10" + 2'10" + 1'2"				
	1'2" + 3'0" + 3'0" + 1'2"				

Notes:

1. Door arrangements using fewer panels than what is shown in the above chart also comply under the product approvals shown.
2. Assembly details are available from the Masonite International website (www.masonite.com) or from the technical center.
3. Installation instructions are available from the Masonite International website (www.masonite.com) or from the technical center.
4. Actual design pressure requirement for a specific building design & geographic location is determined by ASCE 7 (Minimum design loads for buildings and other structures). National, state or local building codes specify the edition required.
5. Masonite International structural, cyclic, air, water, forced entry/or impact testing is done in accordance with Miami-Dade BCCO protocol PA201, PA202 & PA203.

Warnock Hersey

Test Data Review Certificate #3026447A; #3026447B; #3026447C and COP/Test Report Validation Matrix #3026447A-001, 002, 003; #3026447B-001, 002, 003; #3026447C-001, 002, 003 provides additional information - available from the ITS/WH website (www.etlsemko.com), the Masonite website (www.masonite.com) or the Masonite technical center.

Oakcraft™ Wood-grain Textured FIBERGLASS ENTRY DOORS

ARTEK™ Non-Textured Fiberglass Entry Doors

June 17, 2002

Our continuing program of product improvement makes specifications, design and product detail subject to change without notice.

PREMDOR Collection Premium Quality Doors

Exclusively from Masonite® Masonite International Corporation

FIBERGLASS DOORS

Opaque Units

6'8" Height – Inswing

Arrangement	Singles (width)	Masonite International	Miami-Dade BCCO	DP Rating	Impact Rated
X	2'0"	COP-WL-MA0101-02	01-1031.01	76.0	NO
	2'6"				
	2'8"				
	2'10"				
	3'0"				
	3'6"	Not Listed	Not Listed	–	–
Arrangement	**Multiples (width)**	**Masonite International**	**Miami-Dade BCCO**	**DP Rating**	**Impact Rated**
XO, OX, OXO	2'8" + 1'0"	COP-WL-MA0103-02	02-0109.10 (Application Filed)	55.0	NO
	2'8" + 1'2"				
	2'10" + 1'0"				
	2'10" + 1'2"				
	3'0" + 1'0"				
	3'0" + 1'2"				
	1'0" + 2'8" + 1'0"	COP-WL-MA0104-02	02-0109.10 (Application Filed)	55.0	NO
	1'0" + 2'10" + 1'0"				
	1'2" + 2'8" + 1'2"				
	1'0" + 2'8" + 1'0"				
	1'0" + 3'0" + 1'0"				
	1'2" + 2'10" + 1'2"				
	1'2" + 3'0" + 1'2"				
	2'6" + 2'6" + 2'6"	Not Listed	Not Listed	–	–
	2'8" + 2'8" + 2'8"				
	2'10" + 2'10" + 2'10"				
	3'0" + 3'0" + 3'0"				
XX, OXXO	2'6" + 2'6"	COP-WL-MA0102-02	02-0109.10 (Application Filed)	55.0	NO
	2'8" + 2'8"				
	2'10" + 2'10"				
	3'0" + 3'0"				
	1'2" + 2'6" + 2'6" + 1'2"	COP-WL-MA0105-02	02-0109.10 (Application Filed)	55.0	NO
	1'2" + 2'8" + 2'8" + 1'2"				
	1'2" + 2'10" + 2'10" + 1'2"				
	1'2" + 3'0" + 3'0" + 1'2"				

Notes:

1. Door arrangements using fewer panels than what is shown in the above chart also comply under the product approvals shown.
2. Assembly details are available from the Masonite International website (www.masonite.com) or from the technical center.
3. Installation instructions are available from the Masonite International website (www.masonite.com) or from the technical center.
4. Actual design pressure requirement for a specific building design & geographic location is determined by ASCE 7 (Minimum design loads for buildings and other structures). National, state or local building codes specify the edition required.
5. Masonite International structural, cyclic, air, water, forced entry/or impact testing is done in accordance with Miami-Dade BCCO protocol PA201, PA202 & PA203.

Warnock Hersey

Test Data Review Certificate #3026447A; #3026447B; #3026447C and COP/Test Report Validation Matrix #3026447A-001, 002, 003; #3026447B-001, 002, 003; #3026447C-001, 002, 003 provides additional information - available from the ITS/WH website (www.etlsemko.com), the Masonite website (www.masonite.com) or the Masonite technical center.

Oakcraft Wood-grain Textured FIBERGLASS ENTRY DOORS

ARTEK Non-Textured Fiberglass Entry Doors

June 17, 2002

Our continuing program of product improvement makes specifications, design and product detail subject to change without notice.

PREMDOR Collection Premium Quality Doors

Exclusively from Masonite®

Masonite International Corporation

FIBERGLASS DOORS

Glazed Units

8'0" Height – Outswing

Arrangement	Singles (width)	Masonite International	Miami-Dade BCCO	DP Rating	Impact Rated
X	2'0"	COP-WL-MA0166-02	02-0423.03 (Application Filed)	47.0	NO
	2'6"				
	2'8"				
	2'10"				
	3'0"				
	3'6"	Not Listed	Not Listed	–	–
Arrangement	**Multiples (width)**	**Masonite International**	**Miami-Dade BCCO**	**DP Rating**	**Impact Rated**
XO, OX, OXO	2'8" + 1'0"	COP-WL-MA0168-02	02-0423.03 (Application Filed)	47.0	NO
	2'8" + 1'2"				
	2'10" + 1'0"				
	2'10" + 1'2"				
	3'0" + 1'0"				
	3'0" + 1'2"				
	1'0" + 2'8" + 1'0"	COP-WL-MA0169-02	02-0423.03 (Application Filed)	47.0	NO
	1'0" + 2'10" + 1'0"				
	1'2" + 2'8" + 1'2"				
	1'0" + 2'8" + 1'0"				
	1'0" + 3'0" + 1'0"				
	1'2" + 2'10" + 1'2"				
	1'2" + 3'0" + 1'2"				
	2'6" + 2'6" + 2'6"				
	2'8" + 2'8" + 2'8"				
	2'10" + 2'10" + 2'10"				
	3'0" + 3'0" + 3'0"				
XX, OXXO	2'6" + 2'6"	COP-WL-MA0167-02	02-0423.03 (Application Filed)	47.0	NO
	2'8" + 2'8"				
	2'10" + 2'10"				
	3'0" + 3'0"				
	2'6" + 2'6" + 2'6" + 2'6"	COP-WL-MA0170-02	02-0423.03 (Application Filed)	47.0	NO
	2'8" + 2'8" + 2'8" + 2'8"				
	2'10" + 2'10" + 2'10" + 2'10"				
	3'0" + 3'0" + 3'0" + 3'0"				

Notes:

1. Door arrangements using fewer panels than what is shown in the above chart also comply under the product approvals shown.
2. Assembly details are available from the Masonite International website (www.masonite.com) or from the technical center.
3. Installation instructions are available from the Masonite International website (www.masonite.com) or from the technical center.
4. Actual design pressure requirement for a specific building design & geographic location is determined by ASCE 7 (Minimum design loads for buildings and other structures). National, state or local building codes specify the edition required.
5. Masonite International structural, cyclic, air, water, forced entry/or impact testing is done in accordance with Miami-Dade BCCO protocol PA201, PA202 & PA203.

Warnock Hersey

Test Data Review Certificate #3026447A; #3026447B; #3026447C and COP/Test Report Validation Matrix #3026447A-001, 002, 003; #3026447B-001, 002, 003; #3026447C-001, 002, 003 provides additional information - available from the ITS/WH website (www.etlsemko.com), the Masonite website (www.masonite.com) or the Masonite technical center.

Oakcraft™ Wood-grain Textured FIBERGLASS ENTRY DOORS

ARTEK™ Non-Textured Fiberglass Entry Doors

June 17, 2002

Our continuing program of product improvement makes specifications, design and product detail subject to change without notice.

PREMDOR Collection Premium Quality Doors

Exclusively from Masonite® Masonite International Corporation

FIBERGLASS DOORS

Glazed Units

8'0" Height – Inswing

Arrangement	Singles (width)	Masonite International	Miami-Dade BCCO	DP Rating	Impact Rated
X	2'0"	COP-WL-MA0146-02	02-0423.01 (Application Filed)	40.0	NO
	2'6"				
	2'8"				
	2'10"				
	3'0"				
	3'6"	Not Listed	Not Listed	–	–
Arrangement	**Multiples (width)**	**Masonite International**	**Miami-Dade BCCO**	**DP Rating**	**Impact Rated**
XO, OX, OXO	2'8" + 1'0"	COP-WL-MA0148-02	02-0423.01 (Application Filed)	40.0	NO
	2'8" + 1'2"				
	2'10" + 1'0"				
	2'10" + 1'2"				
	3'0" + 1'0"				
	3'0" + 1'2"				
	1'0" + 2'8" + 1'0"	COP-WL-MA0149-02	02-0423.01 (Application Filed)	40.0	NO
	1'0" + 2'10" + 1'0"				
	1'2" + 2'8" + 1'2"				
	1'0" + 2'8" + 1'0"				
	1'0" + 3'0" + 1'0"				
	1'2" + 2'10" + 1'2"				
	1'2" + 3'0" + 1'2"				
	2'6" + 2'6" + 2'6"				
	2'8" + 2'8" + 2'8"				
	2'10" + 2'10" + 2'10"				
	3'0" + 3'0" + 3'0"				
XX, OXXO	2'6" + 2'6"	COP-WL-MA0147-02	02-0423.01 (Application Filed)	40.0	NO
	2'8" + 2'8"				
	2'10" + 2'10"				
	3'0" + 3'0"				
	2'6" + 2'6" + 2'6" + 2'6"	COP-WL-MA0150-02	02-0423.01 (Application Filed)	40.0	NO
	2'8" + 2'8" + 2'8" + 2'8"				
	2'10" + 2'10" + 2'10" + 2'10"				
	3'0" + 3'0" + 3'0" + 3'0"				

Notes:

1. Door arrangements using fewer panels than what is shown in the above chart also comply under the product approvals shown.
2. Assembly details are available from the Masonite International website (www.masonite.com) or from the technical center.
3. Installation instructions are available from the Masonite International website (www.masonite.com) or from the technical center.
4. Actual design pressure requirement for a specific building design & geographic location is determined by ASCE 7 (Minimum design loads for buildings and other structures). National, state or local building codes specify the edition required.
5. Masonite International structural, cyclic, air, water, forced entry/or impact testing is done in accordance with Miami-Dade BCCO protocol PA201, PA202 & PA203.

Warnock Hersey

Test Data Review Certificate #3026447A; #3026447B; #3026447C and COP/Test Report Validation Matrix #3026447A-001, 002, 003; #3026447B-001, 002, 003; #3026447C-001, 002, 003 provides additional information - available from the ITS/WH website (www.etlsemko.com), the Masonite website (www.masonite.com) or the Masonite technical center.

Oakcraft™ Wood-grain Textured FIBERGLASS ENTRY DOORS

ARTEK™ Non-Textured Fiberglass Entry Doors

June 17, 2002

Our continuing program of product improvement makes specifications, design and product detail subject to change without notice.

PREMDOOR Collection Premium Quality Doors

Exclusively from Masonite® Masonite International Corporation

FIBERGLASS DOORS

Glazed Units

6'8" Height – Outswing

Arrangement	Singles (width)	Masonite International	Miami-Dade BCCO	DP Rating	Impact Rated
X	2'0"	COP-WL-MA0161-02	02-0418.03 (Application Filed)	55.0	NO
	2'6"				
	2'8"				
	2'10"				
	3'0"				
	3'6"	Not Listed	Not Listed	–	–
Arrangement	**Multiples (width)**	**Masonite International**	**Miami-Dade BCCO**	**DP Rating**	**Impact Rated**
XO, OX, OXO	2'8" + 1'0"	COP-WL-MA0163-02	02-0418.03 (Application Filed)	55.0	NO
	2'8" + 1'2"				
	2'10" + 1'0"				
	2'10" + 1'2"				
	3'0" + 1'0"				
	3'0" + 1'2"				
	1'0" + 2'8" + 1'0"	COP-WL-MA0164-02	02-0418.03 (Application Filed)	55.0	NO
	1'0" + 2'10" + 1'0"				
	1'2" + 2'8" + 1'2"				
	1'0" + 2'8" + 1'0"				
	1'0" + 3'0" + 1'0"				
	1'2" + 2'10" + 1'2"				
	1'2" + 3'0" + 1'2"				
	2'6" + 2'6" + 2'6"				
	2'8" + 2'8" + 2'8"				
	2'10" + 2'10" + 2'10"				
	3'0" + 3'0" + 3'0"				
XX, OXXO	2'6" + 2'6"	COP-WL-MA0162-02	02-0418.03 (Application Filed)	55.0	NO
	2'8" + 2'8"				
	2'10" + 2'10"				
	3'0" + 3'0"				
	2'6" + 2'6" + 2'6" + 2'6"	COP-WL-MA0165-02	02-0418.03 (Application Filed)	55.0	NO
	2'8" + 2'8" + 2'8" + 2'8"				
	2'10" + 2'10" + 2'10" + 2'10"				
	3'0" + 3'0" + 3'0" + 3'0"				

Notes:

1. Door arrangements using fewer panels than what is shown in the above chart also comply under the product approvals shown.
2. Assembly details are available from the Masonite International website (www.masonite.com) or from the technical center.
3. Installation instructions are available from the Masonite International website (www.masonite.com) or from the technical center.
4. Actual design pressure requirement for a specific building design & geographic location is determined by ASCE 7 (Minimum design loads for buildings and other structures). National, state or local building codes specify the edition required.
5. Masonite International structural, cyclic, air, water, forced entry/or impact testing is done in accordance with Miami-Dade BCCO protocol PA201, PA202 & PA203.

Warnock Hersey

Test Data Review Certificate #3026447A; #3026447B; #3026447C and COP/Test Report Validation Matrix #3026447A-001, 002, 003; #3026447B-001, 002, 003; #3026447C-001, 002, 003 provides additional information - available from the ITS/WH website (www.etlsemko.com), the Masonite website (www.masonite.com) or the Masonite technical center.

Oakcraft™ Wood-grain Textured FIBERGLASS ENTRY DOORS

ARTEK™ Non-Textured Fiberglass Entry Doors

PREMDOR Collection Premium Quality Doors

Exclusively from Masonite® Masonite International Corporation

June 17, 2002

Our continuing program of product improvement makes specifications, design and product detail subject to change without notice.

XX
Unit

MID-WL-MA0002-02

DOUBLE DOOR

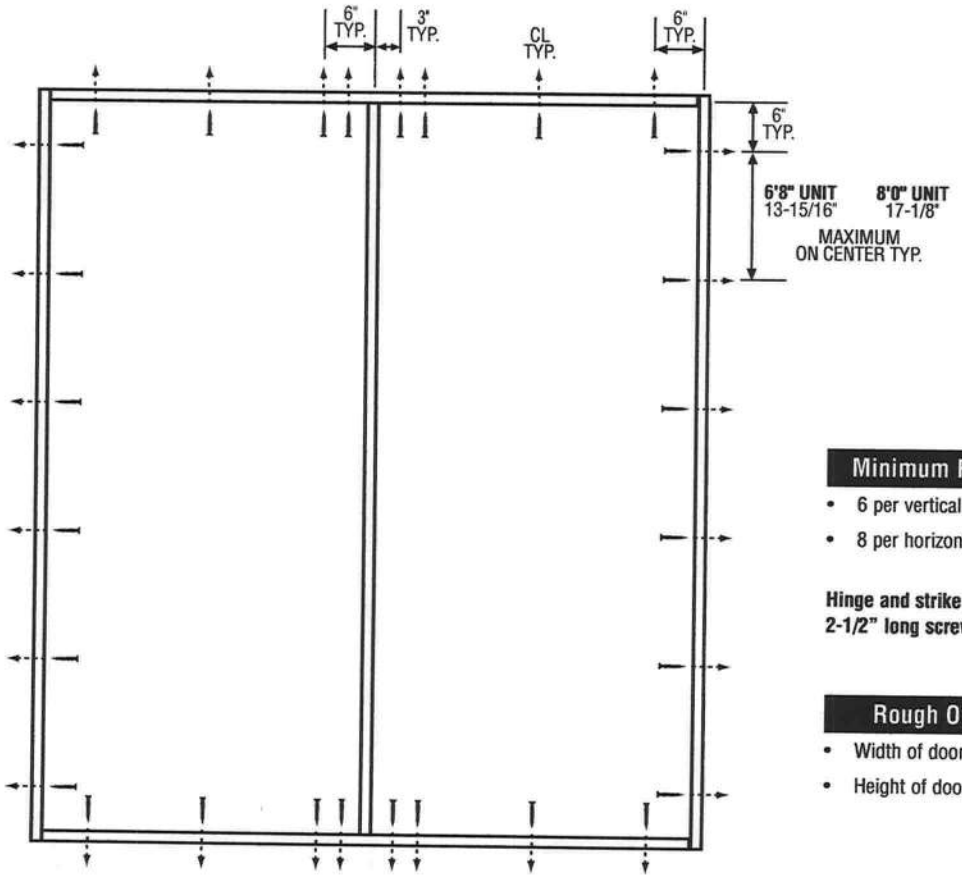

Minimum Fastener Count

- 6 per vertical framing member
- 8 per horizontal framing member

Hinge and strike plates require two 2-1/2" long screws per location.

Rough Opening (RO)

- Width of door unit plus 1/2"
- Height of door unit plus 1/4"

Warnock Hersey Test Data Review Certificate #3026447A; #3026447B; #3026447C and COP/Test Report Validation Matrix #3026447A-001, 002, 003; #3026447B-001, 002, 003; #3026447C-001, 002, 003 provides additional information - available from the ITS/WH website (www.etlsemko.com), the Masonite website (www.masonite.com) or the Masonite technical center.

Latching Hardware:

- Compliance requires that GRADE 3 or better (ANSI/BHMA A156.2) cylindrical and deadlock hardware be installed.
- **UNITS COVERED BY COP DOCUMENT 3147, 3167, 3242*, 3247, 3262* or 3267**
  Compliance requires that 8" GRADE 1 (ANSI/BHMA A156.16) surface bolts be installed on latch side of active door panel – (1) at top and (1) at bottom.

*Based on required Design Pressure – see COP sheet for details.

Notes:

1. Anchor calculations have been carried out with the lowest (least) fastener rating from the different fasteners being considered for use. Fasteners analyzed for this unit include #8 and #10 wood screws or 3/16" Tapcons.
2. The wood screw single shear design values come from Table 11.3A of ANSI/AF & PA NDS for southern pine lumber with a side member thickness of 1-1/4" and achievement of minimum embedment. The 3/16" Tapcon single shear design values come from the ITW and ELCO Dade Country approvals respectively, each with minimum 1-1/4" embedment.
3. Wood bucks by others, must be anchored properly to transfer loads to the structure.

June 17, 2002
Our continuing program of product improvement makes specifications, design and product detail subject to change without notice.

PREMDOR Collection Premium Quality Doors
Exclusively from Masonite®
Masonite International Corporation

SINGLE DOOR WITH 2 SIDELITES

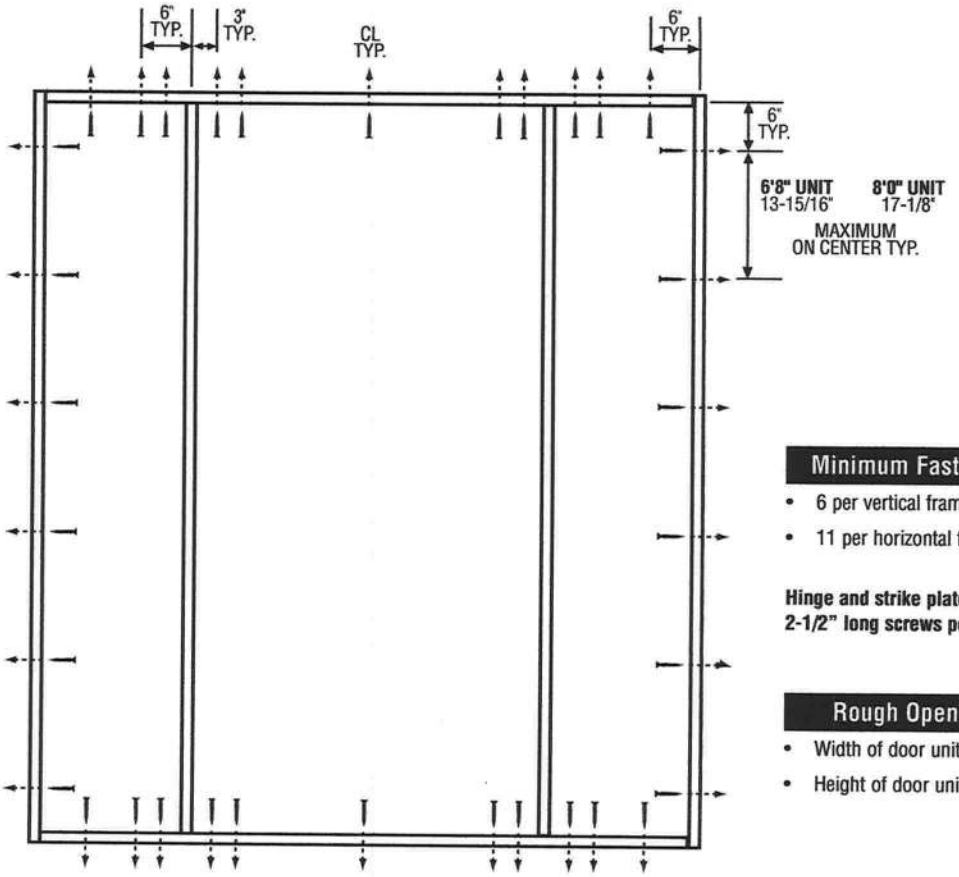

Minimum Fastener Count

- 6 per vertical framing member
- 11 per horizontal framing member

Hinge and strike plates require two 2-1/2" long screws per location.

Rough Opening (RO)

- Width of door unit plus 1/2"
- Height of door unit plus 1/4"

Warnock Hersey

Test Data Review Certificate #3026447A; #3026447B; #3026447C and COP/Test Report Validation Matrix #3026447A-001, 002, 003; #3026447B-001, 002, 003; #3026447C-001, 002, 003 provides additional information - available from the ITS/WH website (www.etlsemko.com), the Masonite website (www.masonite.com) or the Masonite technical center.

Latching Hardware:

- Compliance requires that GRADE 3 or better (ANSI/BHMA A156.2) cylindrical and deadlock hardware be installed.
- **UNITS COVERED BY COP DOCUMENT 3244*, 3249, 3264* or 3269**
  Compliance requires that 8" GRADE 1 (ANSI/BHMA A156.16) surface bolts be installed on latch side of active door panel – (1) at top and (1) at bottom.

*Based on required Design Pressure – see COP sheet for details.

Notes:

1. Anchor calculations have been carried out with the lowest (least) fastener rating from the different fasteners being considered for use. Fasteners analyzed for this unit include #8 and #10 wood screws or 3/16" Tapcons.
2. The wood screw single shear design values come from Table 11.3A of ANSI/AF & PA NDS for southern pine lumber with a side member thickness of 1-1/4" and achievement of minimum embedment. The 3/16" Tapcon single shear design values come from the ITW and ELCO Dade Country approvals respectively, each with minimum 1-1/4" embedment.
3. Wood bucks by others, must be anchored properly to transfer loads to the structure.

June 17, 2002
Our continuing program of product improvement makes specifications, design and product detail subject to change without notice.

PREMDOR Collection Premium Quality Doors
Exclusively from Masonite®
Masonite International Corporation

SINGLE DOOR

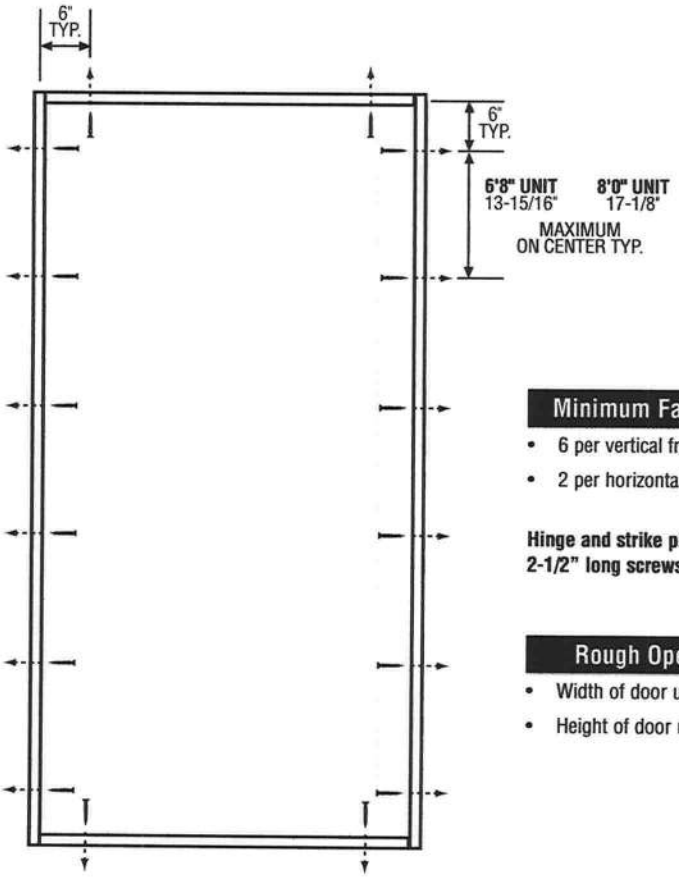

Minimum Fastener Count

- 6 per vertical framing member
- 2 per horizontal framing member

Hinge and strike plates require two 2-1/2" long screws per location.

Rough Opening (RO)

- Width of door unit plus 1/2"
- Height of door unit plus 1/4"

Warnock Hersey Test Data Review Certificate #3026447A; #3026447B; #3026447C and COP/Test Report Validation Matrix #3026447A-001, 002, 003; #3026447B-001, 002, 003; #3026447C-001, 002, 003 provides additional information - available from the ITS/WH website (www.etlsemko.com), the Masonite website (www.masonite.com) or the Masonite technical center.

Latching Hardware:

- Compliance requires that GRADE 3 or better (ANSI/BHMA A156.2) cylindrical and deadlock hardware be installed.
- **UNITS COVERED BY COP DOCUMENT 3146, 3166, 3241*, 3246, 3261* or 3266**
  Compliance requires that 8" GRADE 1 (ANSI/BHMA A156.16) surface bolts be installed on latch side of active door panel – (1) at top and (1) at bottom.

*Based on required Design Pressure – see COP sheet for details.

Notes:

1. Anchor calculations have been carried out with the lowest (least) fastener rating from the different fasteners being considered for use. Fasteners analyzed for this unit include #8 and #10 wood screws or 3/16" Tapcons.
2. The wood screw single shear design values come from Table 11.3A of ANSI/AF & PA NDS for southern pine lumber with a side member thickness of 1-1/4" and achievement of minimum embedment. The 3/16" Tapcon single shear design values come from the ITW and ELCO Dade Country approvals respectively, each with minimum 1-1/4" embedment.
3. Wood bucks by others, must be anchored properly to transfer loads to the structure.

June 17, 2002
Our continuing program of product improvement makes specifications, design and product detail subject to change without notice.

PREMDOR Collection Premium Quality Doors
Exclusively from Masonite®
Masonite International Corporation

STRUCTURAL HORIZONTAL MULLION # M-1926

Specialty over Single Units
(and some sizes of twins)

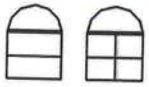

3540/8540 Fin

NOTE: SINCE THIS MULL CAN BE USED VERTICALLY OR HORIZONTALLY AND HAVE DIFFERENT INSTRUCTION SHEETS AND DP CHARTS FOR EACH, YOU MUST SPECIFY "HORIZONTAL" AND THE LENGTH REQUIRED (SAME AS I.D. SIZE).

- WHITE & ALMOND AVAILABLE (THE MULLION IS MILL FINISH)

Step 1. Score and remove the nail fin from both units.

Step 2. Position horizontal mull on top of lower unit as shown. With 1/8" drill, drill up through the frame head and into the mull. Re-drill 1st. hole with 3/8" bit. Before attaching with # 8 X 1" screws, run a full length bead of caulk between the mull and the window. Do not over tighten the screws or distortion could occur.

NOTE: PLACE 1st. SCREWS 3" FROM EACH END AND DO NOT EXCEED 16" SPACING OF REMAINDER.

Step 3. For attaching stacked-on unit to lower unit, repeat Step 2. Install the notched interior & exterior mull covers (vinyl) and install the 3/8" diameter hole plugs (6 included with mull).

Step 4. Before lifting into rough opening, drill two 3/16" holes in each clip and insert into mull with tab facing to the inside. After window unit is installed, anchor the brackets with #10 X 1 1/2" sheet metal screws (for wood) or 3/16" X 1 1/2" Tapcons (for block).

WARNING ! IT IS THE RESPONSIBILITY OF THE INSTALLER TO PLUG WITH SILICONE, OR OTHERWISE "CAP OFF", THE LARGE HOLE IN THE END OF THE MULLION (FROM NAIL FIN OUTWARD) IN ORDER TO PREVENT WATER LEAKS.

Re-drill for 3/8" plug

STEP 1. Remove Nail Fin

STEP 3.

Caulk

STEP 2.

1 1/8"

Exterior

Remove Nail Fin STEP 1.

8 x 1" Sheet metal screws

Snap cover #V-698 STEP 3.

1/8" Drive Holes in mull

"Snap-in" (cannot be removed)

3/8" Hole Plug # G-187PWC (White) or PWA (Almond) (Plug & snap-in only on fixed units)

Notch back 3/8" to clear corner welds.

Exterior

3/16" Clearance Holes Field Drilled – STEP 4.

M.I. Home Products

NOTE: SEE REVERSE SIDE FOR DESIGN PRESSURE CAPACITIES.

MI HOME PRODUCTS

HORIZONTAL MULLION DESIGN LOAD CAPACITIES

FOR EXTRUDED ALUMINUM TUBE MULLION (M-1926)

WHEN USED FOR MULLING TRANSOM

MULL SPAN > WDW. HGT. V	24.000	26.500	37.000	48.000	53.125	60.000	74.000
26.000	1528	1135	439	217	166	109	50
36.000	1528	1135	417	198	150	98	45
38.375	1528	1135	417	195	147	96	44
48.000	1528	1135	417	191	142	91	41
50.625	1528	1135	417	191	141	90	41
60.000	1528	1135	417	191	141	89	39
63.000	1528	1135	417	191	141	89	39
72.000	1528	1135	417	191	141	89	38
72.250	1528	1135	417	191	141	89	38

NOTES:

* CHART APPLIES ONLY TO EXTRUDED ALUMINUM MULLION (M-1926) USED HORIZONTALLY.
* CHART ASSUMES TRANSOM HEIGHT TO BE ONE HALF MULLION SPAN.
* WINDOW HEIGHTS SHOWN ON "Y" AXIS OF CHART DESIGNATE HEIGHT OF WINDOWS BELOW MULLION AND DO NOT INCLUDE TRAMSOM HEIGHT.
* READ MULLION SPAN AND WINDOW HEIGHT IN INCHES.
* DESIGN PRESSURE VALUES ON THIS CHART ARE IN PSF.
* DESIGN LOAD CAPACITIES SHOWN ON THIS CHART DO NOT CONSIDER ANY STRENGTH WHICH MAY BE OBTAINED FROM FRAME MEMBERS OF ADJACENT WINDOWS.
* Dmax = L / 175
* INSTALLATION OF MULLION: MULLION MUST BE ANCHORED TO SUBSTRATE. CONNECTION MUST BE DESIGNED TO ADEQUATELY TRANSFER LOAD TO THE STRUCTURE. SEE MANUFACTURER'S MULLION INSTALLATION DETAILS.

PREPARED BY:

PRODUCT TECHNOLOGY CORPORATION

1150 LOUISIANA AVE.

SUITE 6

WINTER PARK, FLORIDA 32789

PHONE 407 622-6334 / FAX 407 622-6335

MANUEL MARTINEZ CERTIFICATE NO. 47182 STATE OF FLORIDA REGISTERED

STRUCTURAL VERTICAL MULLION #M-1926

3540/8540 Fin

Step 1. Remove nail fins (and J-flange if applicable) of sides of windows to be joined.

Step 2. Place windows 1 1/8" apart, then snap in exterior vinyl mull cover.

Note: Make sure the snap hooks on both ends of interior vinyl mull cover is notched back 1/4" to clear corner welds on window frame. The exterior vinyl cap only requires this notch at the bottom since the top is to be trimmed 1/4" short to butt against the drip cap.

Step 3. Lay windows, exterior face down, on a padded flat work surface. Place aluminum mull between windows as shown.

Step 4. Run a full length bead of caulk (2 places) between mull & jamb, then snap in interior vinyl mull cover.

Step 5. Drill holes through vinyl frame only with 3/16" drill bit in locations shown. Drill two holes in each jamb above the meeting rail through interior tracks. Drill one hole in each jamb 3 1/2" up from bottom of window through screen track.

Step 6. Drill through aluminum mullion with 1/8" drill bit.

Step 7. Attach windows to mullion using 2 # 8 x 2 1/4" screws through bottom holes, and 4 # 8 x 1" screws through remaining holes. (Screws not furnished).

Step 8. Before lifting into rough opening, drill two holes in each clip and insert into each end of mull as shown below with tab pointing to inside. Fasten each clip tab to construction with two #10 x 1 1/2" screws for structural integrity.

Step 9. The large hole created by the hollow mullion will allow water leakage into the interior unless a full length aluminum drip cap (ordered separately in 16 ft. lengths) is installed across the head. Specify M-1799 for standard frames, and M-1800 for "J-flange" frames. Be sure to notch out mull grooves on exterior face of head so "hook" on drip cap can run through at the center.

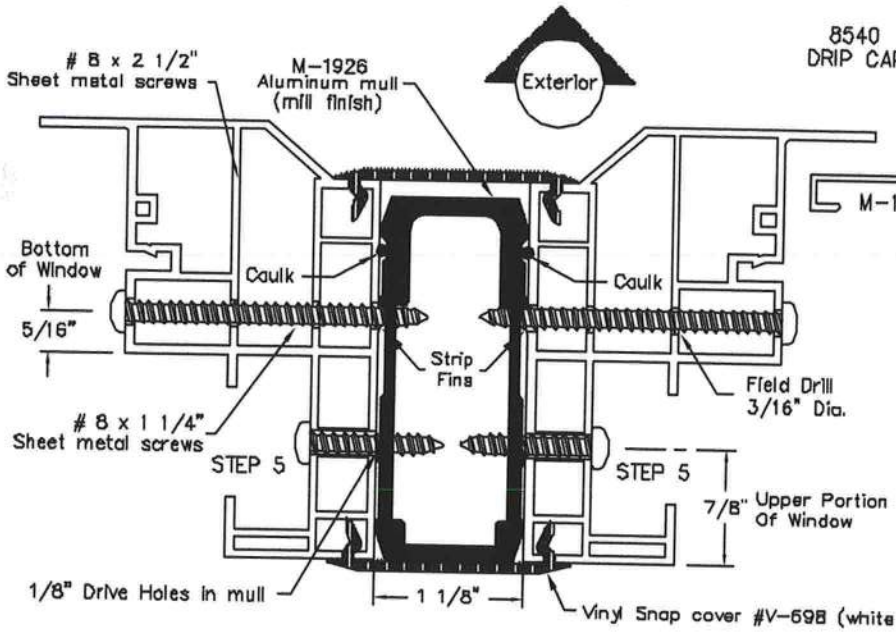

JAMBS, MULL AND DRIP CAPS SHOWN ¾ SCALE

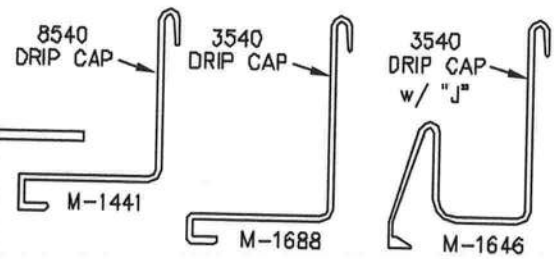

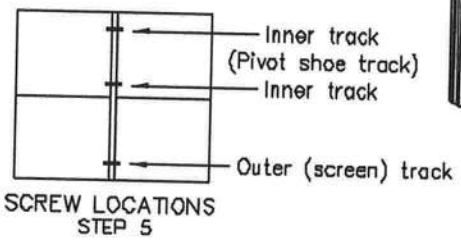

SCREW LOCATIONS
STEP 5

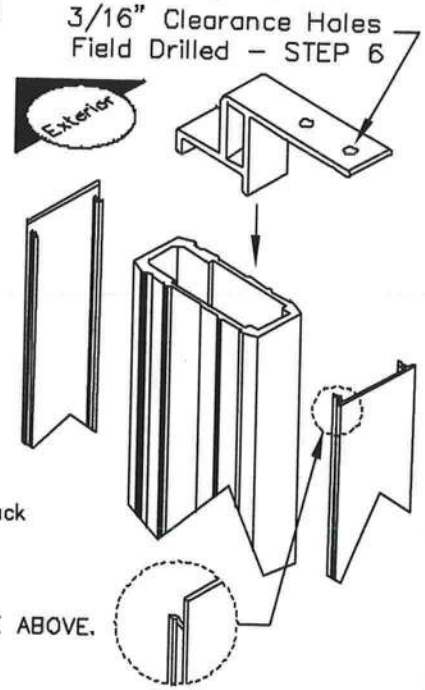

SEE NOTCHING NOTE ABOVE.
STEP 2

NOTE: SEE REVERSE SIDE FOR DESIGN PRESSURE CAPACITIES.

MI HOME PRODUCTS

VERTICAL MULLION DESIGN LOAD CAPACITIES
FOR ALUMINUM TUBE MULLION (DIE # M-1926)

WDW. WIDTH > MULLION SPAN V	19.125	24.000	26.500	36.000	37.000	48.000	53.125
36.000	508	446	426	396	396	396	396
37.375	465	406	387	354	354	354	354
48.000	262	223	209	178	176	167	167
50.625	232	197	184	155	154	143	142
60.000	145	121	113	92	91	81	79
63.000	124	104	96	78	77	68	65
72.000	81	67	62	50	49	42	40
72.250	80	67	62	49	48	42	40

CHART APPLIES ONLY TO EXTRUDED ALUMINUM MULLION (DIE NO: M-1926)
READ WINDOW WIDTH AND HEIGHT IN INCHES.
DESIGN PRESSURE VALUES ON THIS CHART ARE IN PSF.
WINDOW WIDTH DIMENSIONS REPRESENT THE WIDTH OF EACH WINDOW IN A SINGLE OPENING, NOT THE OVERALL WID THE OPENING.
DESIGN PRESSURE VALUES SHOWN ON THE ABOVE CHART IS NOT LIMITED TO ONLY TWO WINDOWS IN A SINGLE OPENII CAPACITIES APPLY TO ANY NUMBER OF WINDOWS IN A SINGLE OPENING, PROVIDED WINDOW WIDTH AND MULLION SPA ARE NOT EXCEEDED.
Dmax = L / 175
INSTALLATION OF MULLION: MULLION MUST BE ANCHORED TO SUBSTRATE. CONNECTION MUST BE DESIGNED TO ADEQUATELY TRANSFER LOAD TO THE STRUCTURE. SEE MANUFACTURER'S MULLION INSTALLATION DETAILS.

PREPARED BY:
PRODUCT TECHNOLOGY CORPORATION
1150 LOUISIANA AVE
SUITE 6
WINTER PARK, FLORIDA 32789
PHONE 407 622-6334 / FAX 407 622-6335

MAR. 21, 02
02-0550

MANUEL MARTINEZ
CERTIFICATE
NO. 47182
STATE OF
FLORIDA
REGISTERED ENGINEER

8540 SH & PW Series - Mile Per Hour (MPH) maximum Size Chart

Series/Type	MPH Zone(s)	Required Mullion		Maximum Sizes Allowed		
				Single Unit	Twin Unit	Triple Unit
8540 SH or PW Fin Frame	Up to 140 MPH	N/A	N/A	4-0 x 6-0	N/A	N/A
8540 SH or PW Fin Frame	Up to 140 MPH	Vert Mull #M-1926 & V-698 Cap (2)		N/A	4-0 x 6-0 Twin (Field Mulled)	4-0 x 6-0 Triple (Field Mulled)
8540 SH or PW Fin Frame	Up to 140 MPH	Horiz Mull #M-1926 & V-698 Cap (2)	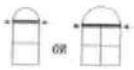	4-0 x 6-0 w/Transom*	2-6 x 6-0 Twin w/Transom* (Field Mulled)	N/A

*1 All Transoms (1, 2, & 3-Lites) must be continuous frame.
*2 Transom units must be a minimum of 1/0 tall. The maximum transom height is one half the width of the transom.
Both Single Hung & Picture Windows can be used in combination up to the maximum sizes listed above.

650 SH & PW Series - Mile Per Hour (MPH) maximum Size Chart

Series/Type	MPH Zone(s)	Required Mullion		Maximum Sizes Allowed		
				Single Unit	Twin Unit	Triple Unit
650 SH or PW Fin or Flange Frame Sng Glz or Ins	up to 140 MPH	N/A	N/A	53-1/8" x 72"	N/A	N/A
650 SH or PW Fin Frame Sng Glz or Ins	up to 130 MPH	Vertical Mull #CM-65130		N/A	53-1/8" x 72"	53-1/8" x 72"
650 SH or PW Fin Frame Sng Glz or Ins	up to 140 MPH	Vertical Mull #CM-65130		N/A	53-1/8" x 63" or 42" x 72"	53-1/8" x 63" or 42" x 72"
650 SH or PW Flange Frame Sng Glz or Ins	up to 130 MPH	Vertical Mull #CM-65129		N/A	53-1/8" x 72"	53-1/8" x 72"
650 SH or PW Flange Frame Sng Glz or Ins	up to 140 MPH	Vertical Mull #CM-65129		N/A	53-1/8" x 63" or 42" x 72"	53-1/8" x 63" or 42" x 72"
650 SH or PW Fin Frame Sng Glz or Ins	up to 120 MPH	Horizontal Mull #CM-65131		N/A	53-1/8" x 72" w/Transom*	32" x 72" w/Transom*
650 SH or PW Fin Frame Sng Glz or Ins	up to 140 MPH	Horizontal Mull #CM-65131		N/A	45" x 72" w/Transom*	30" x 72" w/Transom*
650 SH or PW Flange Frame Sng Glz or Ins	up to 120 MPH	Horizontal Mull #CM-65129	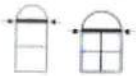	N/A	37" x 72" w/Transom*	N/A
650 SH or PW Flange Frame Sng Glz or Ins	up to 140 MPH	Horizontal Mull #CM-65129	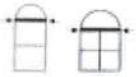	N/A	30" x 72" w/Transom*	N/A
650 SH or PW Fin Frame Sng Glz or Ins	up to 120 MPH	Horizontal Mull #5767		N/A	53-1/8" x 72" w/Transom*	32" x 72" w/Transom*
650 SH or PW Fin Frame Sng Glz or Ins	up to 140 MPH	Horizontal Mull #5767		N/A	45" x 72" w/Transom*	30" x 72" w/Transom*

*1 All Transoms (1, 2, & 3-Lites) must be continuous frame.
*2 Transom units must be a minimum of 1/0 tall. The maximum transom height is one half the width of the transom.
Both Single Hung & Picture Windows can be used in combination up to the maximum sizes listed above.

650 SH & PW Series - Mile Per Hour (MPH) maximum Size Chart

Series/Type	MPH Zone(s)	Required Mullion		Maximum Sizes Allowed		
				Single Unit	Twin Unit	Triple Unit
650 SH or PW Flange Frame Sng Glz or Ins	up to 120 MPH	Horizontal Mull #5765		N/A	53-1/8" x 72" w/Transom*	32" x 72" w/Transom*
650 SH or PW Flange Frame Sng Glz or Ins	up to 140 MPH	Horizontal Mull #5765		N/A	45" x 72" w/Transom*	30" x 72" w/Transom*
650 SH or PW Fin Frame Sng Glz or Ins	up to 110 MPH	Self-Stacking Sill #CM-45026		53-1/8" x 72" w/Transom*	N/A	N/A
650 SH or PW Fin Frame Sng Glz or Ins	up to 120 MPH	Self-Stacking Sill #CM-45026		48" x 72" w/Transom*	N/A	N/A
650 SH or PW Fin Frame Sng Glz or Ins	up to 140 MPH	Self-Stacking Sill #CM-45026		37" x 72" w/Transom*	N/A	N/A
650 SH or PW Continuous Hdr & Sill Sng Glz or Ins	up to 140 MPH	(No Mullion)	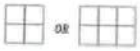	N/A	36" x 72"	36" x 72"

*1 All Transoms (1, 2, & 3-Lites) must be continuous frame.
*2 Transom units must be a minimum of 1/0 tall. The maximum transom height is one half the width of the transom.
Both Single Hung & Picture Windows can be used in combination up to the maximum sizes listed above.

WOOD-EDGE STEEL DOORS

Glazed Units

6'8" Height – Inswing

Arrangement	Singles (width)	Masonite International	Miami-Dade BCCO	DP Rating	Impact Rated
X	2'0"	COP-WL-JH4141-02	Not Listed	40.5	NO
	2'6"				
	2'8"				
	2'10"				
	3'0"				
	3'6"	Not Listed	Not Listed	–	–
Arrangement	**Multiples (width)**	**Masonite International**	**Miami-Dade BCCO**	**DP Rating**	**Impact Rated**
XO, OX, OXO	2'8" + 1'0"	COP-WL-JH4143-02	Not Listed	40.5	NO
	2'8" + 1'2"				
	2'10" + 1'0"				
	2'10" + 1'2"				
	3'0" + 1'0"				
	3'0" + 1'2"				
	1'0" + 2'8" + 1'0"	COP-WL-JH4144-02	Not Listed	40.5	NO
	1'0" + 2'10" + 1'0"				
	1'2" + 2'8" + 1'2"				
	1'0" + 2'8" + 1'0"				
	1'0" + 3'0" + 1'0"				
	1'2" + 2'10" + 1'2"				
	1'2" + 3'0" + 1'2"				
	2'6" + 2'6" + 2'6"				
	2'8" + 2'8" + 2'8"				
	2'10" + 2'10" + 2'10"				
	3'0" + 3'0" + 3'0"				
XX, OXXO	2'6" + 2'6"	COP-WL-JH4142-02	Not Listed	40.5	NO
	2'8" + 2'8"				
	2'10" + 2'10"				
	3'0" + 3'0"				
	2'6" + 2'6" + 2'6" + 2'6"	COP-WL-JH4145-02	Not Listed	40.5	NO
	2'8" + 2'8" + 2'8" + 2'8"				
	2'10" + 2'10" + 2'10" + 2'10"				
	3'0" + 3'0" + 3'0" + 3'0"				

Notes:

1. Door arrangements using fewer panels than what is shown in the above chart also comply under the product approvals shown.
2. Assembly details are available from the Masonite International website (www.masonite.com) or from the technical center.
3. Installation instructions are available from the Masonite International website (www.masonite.com) or from the technical center.
4. Actual design pressure requirement for a specific building design & geographic location is determined by ASCE 7 (Minimum design loads for buildings and other structures). National, state or local building codes specify the edition required.
5. Masonite International structural, cyclic, air, water, forced entry/or impact testing is done in accordance with Miami-Dade BCCO protocol PA201, PA202 & PA203.

Warnock Hersey

Test Data Review Certificate #3026447A and COP/Test Report Validation Matrix #3026447A-001 provides additional information - available from the ITS/WH website (www.etlsemko.com), the Masonite website (www.masonite.com) or the Masonite technical center.

Johnson™ EntrySystems

June 17, 2002

Our continuing program of product improvement makes specifications, design and product detail subject to change without notice.

PREMDOR Collection Premium Quality Doors

Exclusively from Masonite®

Masonite International Corporation

WOOD-EDGE STEEL DOORS

Glazed Units

6'8" Height – Outswing

Arrangement	Singles (width)	Masonite International	Miami-Dade BCCO	DP Rating	Impact Rated
X	2'0"	COP-WL-JH4161-02	Not Listed	40.5	NO
	2'6"				
	2'8"				
	2'10"				
	3'0"				
	3'6"	Not Listed	Not Listed	–	–
Arrangement	**Multiples (width)**	**Masonite International**	**Miami-Dade BCCO**	**DP Rating**	**Impact Rated**
XO, OX, OXO	2'8" + 1'0"	COP-WL-JH4163-02	Not Listed	40.5	NO
	2'8" + 1'2"				
	2'10" + 1'0"				
	2'10" + 1'2"				
	3'0" + 1'0"				
	3'0" + 1'2"				
	1'0" + 2'8" + 1'0"	COP-WL-JH4164-02	Not Listed	40.5	NO
	1'0" + 2'10" + 1'0"				
	1'2" + 2'8" + 1'2"				
	1'0" + 2'8" + 1'0"				
	1'0" + 3'0" + 1'0"				
	1'2" + 2'10" + 1'2"				
	1'2" + 3'0" + 1'2"				
	2'6" + 2'6" + 2'6"				
	2'8" + 2'8" + 2'8"				
	2'10" + 2'10" + 2'10"				
	3'0" + 3'0" + 3'0"				
XX, OXXO	2'6" + 2'6"	COP-WL-JH4162-02	Not Listed	40.5	NO
	2'8" + 2'8"				
	2'10" + 2'10"				
	3'0" + 3'0"				
	2'6" + 2'6" + 2'6" + 2'6"	COP-WL-JH4165-02	Not Listed	40.5	NO
	2'8" + 2'8" + 2'8" + 2'8"				
	2'10" + 2'10" + 2'10" + 2'10"				
	3'0" + 3'0" + 3'0" + 3'0"				

Notes:

1. Door arrangements using fewer panels than what is shown in the above chart also comply under the product approvals shown.
2. Assembly details are available from the Masonite International website (www.masonite.com) or from the technical center.
3. Installation instructions are available from the Masonite International website (www.masonite.com) or from the technical center.
4. Actual design pressure requirement for a specific building design & geographic location is determined by ASCE 7 (Minimum design loads for buildings and other structures). National, state or local building codes specify the edition required.
5. Masonite International structural, cyclic, air, water, forced entry/or impact testing is done in accordance with Miami-Dade BCCO protocol PA201, PA202 & PA203.

Warnock Hersey

Test Data Review Certificate #3026447A and COP/Test Report Validation Matrix #3026447A-001 provides additional information - available from the ITS/WH website (www.etlsemko.com), the Masonite website (www.masonite.com) or the Masonite technical center.

Johnson™ EntrySystems

June 17, 2002

Our continuing program of product improvement makes specifications, design and product detail subject to change without notice.

PREMDOR Collection Premium Quality Doors

Exclusively from Masonite®

Masonite International Corporation

WOOD-EDGE STEEL DOORS

Opaque Units

6'8" Height – Inswing

Arrangement	Singles (width)	Masonite International	Miami-Dade BCCO	DP Rating	Impact Rated
X	2'0"	COP-WL-JH4101-02	99-1008.09	66.0	YES
	2'6"				
	2'8"				
	2'10"				
	3'0"				
	3'6"	Not Listed	Not Listed	–	–
Arrangement	**Multiples (width)**	**Masonite International**	**Miami-Dade BCCO**	**DP Rating**	**Impact Rated**
XO, OX, OXO	2'8" + 1'0"	COP-WL-JH4103-02	Not Listed	57.0	YES
	2'8" + 1'2"				
	2'10" + 1'0"				
	2'10" + 1'2"				
	3'0" + 1'0"				
	3'0" + 1'2"				
	1'0" + 2'8" + 1'0"	COP-WL-JH4104-02	Not Listed	57.0	YES
	1'0" + 2'10" + 1'0"				
	1'2" + 2'8" + 1'2"				
	1'0" + 2'8" + 1'0"				
	1'0" + 3'0" + 1'0"				
	1'2" + 2'10" + 1'2"				
	1'2" + 3'0" + 1'2"				
	2'6" + 2'6" + 2'6"	COP-WL-JH4104-02	Not Listed	45.0	YES
	2'8" + 2'8" + 2'8"				
	2'10" + 2'10" + 2'10"				
	3'0" + 3'0" + 3'0"				
XX, OXXO	2'6" + 2'6"	COP-WL-JH4102-02	Not Listed	45.0	YES
	2'8" + 2'8"				
	2'10" + 2'10"				
	3'0" + 3'0"				
	2'6" + 2'6" + 2'6" + 2'6"	COP-WL-JH4105-02	Not Listed	45.0	YES
	2'8" + 2'8" + 2'8" + 2'8"				
	2'10" + 2'10" + 2'10" + 2'10"				
	3'0" + 3'0" + 3'0" + 3'0"				

Notes:

1. Door arrangements using fewer panels than what is shown in the above chart also comply under the product approvals shown.
2. Assembly details are available from the Masonite International website (www.masonite.com) or from the technical center.
3. Installation instructions are available from the Masonite International website (www.masonite.com) or from the technical center.
4. Actual design pressure requirement for a specific building design & geographic location is determined by ASCE 7 (Minimum design loads for buildings and other structures). National, state or local building codes specify the edition required.
5. Masonite International structural, cyclic, air, water, forced entry/or impact testing is done in accordance with Miami-Dade BCCO protocol PA201, PA202 & PA203.

Warnock Hersey

Test Data Review Certificate #3026447A and COP/Test Report Validation Matrix #3026447A-001 provides additional information - available from the ITS/WH website (www.etlsemko.com), the Masonite website (www.masonite.com) or the Masonite technical center.

Johnson™ EntrySystems

June 17, 2002

Our continuing program of product improvement makes specifications, design and product detail subject to change without notice.

PREMDOR Collection Premium Quality Doors

Exclusively from Masonite® Masonite International Corporation

WOOD-EDGE STEEL DOORS

Opaque Units

6'8" Height – Outswing

Arrangement	Singles (width)	Masonite International	Miami-Dade BCCO	DP Rating	Impact Rated
X	2'0"	COP-WL-JH4121-02	99-1008.08	66.0	YES
	2'6"				
	2'8"				
	2'10"				
	3'0"				
	3'6"	Not Listed	Not Listed	–	–
Arrangement	**Multiples (width)**	**Masonite International**	**Miami-Dade BCCO**	**DP Rating**	**Impact Rated**
XO, OX, OXO	2'8" + 1'0"	COP-WL-JH4123-02	Not Listed	57.0	YES
	2'8" + 1'2"				
	2'10" + 1'0"				
	2'10" + 1'2"				
	3'0" + 1'0"				
	3'0" + 1'2"				
	1'0" + 2'8" + 1'0"	COP-WL-JH4124-02	Not Listed	57.0	YES
	1'0" + 2'10" + 1'0"				
	1'2" + 2'8" + 1'2"				
	1'0" + 2'8" + 1'0"				
	1'0" + 3'0" + 1'0"				
	1'2" + 2'10" + 1'2"				
	1'2" + 3'0" + 1'2"				
	2'6" + 2'6" + 2'6"	COP-WL-JH4124-02	Not Listed	45.0	YES
	2'8" + 2'8" + 2'8"				
	2'10" + 2'10" + 2'10"				
	3'0" + 3'0" + 3'0"				
XX, OXXO	2'6" + 2'6"	COP-WL-JH4122-02	Not Listed	45.0	YES
	2'8" + 2'8"				
	2'10" + 2'10"				
	3'0" + 3'0"				
	2'6" + 2'6" + 2'6" + 2'6"	COP-WL-JH4125-02	Not Listed	45.0	YES
	2'8" + 2'8" + 2'8" + 2'8"				
	2'10" + 2'10" + 2'10" + 2'10"				
	3'0" + 3'0" + 3'0" + 3'0"				

Notes:

1. Door arrangements using fewer panels than what is shown in the above chart also comply under the product approvals shown.
2. Assembly details are available from the Masonite International website (www.masonite.com) or from the technical center.
3. Installation instructions are available from the Masonite International website (www.masonite.com) or from the technical center.
4. Actual design pressure requirement for a specific building design & geographic location is determined by ASCE 7 (Minimum design loads for buildings and other structures). National, state or local building codes specify the edition required.
5. Masonite International structural, cyclic, air, water, forced entry/or impact testing is done in accordance with Miami-Dade BCCO protocol PA201, PA202 & PA203.

Warnock Hersey

Test Data Review Certificate #3026447A and COP/Test Report Validation Matrix #3026447A-001 provides additional information - available from the ITS/WH website (www.etlsemko.com), the Masonite website (www.masonite.com) or the Masonite technical center.

Johnson™ EntrySystems

June 17, 2002

Our continuing program of product improvement makes specifications, design and product detail subject to change without notice.

PREMDOR Collection Premium Quality Doors

Exclusively from Masonite® Masonite International Corporation

WOOD-EDGE STEEL DOORS

Opaque Units in 2-piece Adjustable Steel Frame

6'8" Height – Inswing

Arrangement	Singles (width)	Masonite International	Miami-Dade BCCO	DP Rating	Impact Rated
X	2'0"	COP-WL-JH4116-02	Not Listed	56.0	YES
	2'6"				
	2'8"				
	2'10"				
	3'0"				
	3'6"	Not Listed	Not Listed	–	–
Arrangement	**Multiples (width)**	**Masonite International**	**Miami-Dade BCCO**	**DP Rating**	**Impact Rated**
XO, OX, OXO	2'8" + 1'0"	Not Listed	Not Listed	–	–
	2'8" + 1'2"				
	2'10" + 1'0"				
	2'10" + 1'2"				
	3'0" + 1'0"				
	3'0" + 1'2"				
	1'0" + 2'8" + 1'0"				
	1'0" + 2'10" + 1'0"				
	1'2" + 2'8" + 1'2"				
	1'0" + 2'8" + 1'0"				
	1'0" + 3'0" + 1'0"				
	1'2" + 2'10" + 1'2"				
	1'2" + 3'0" + 1'2"				
	2'6" + 2'6" + 2'6"				
	2'8" + 2'8" + 2'8"				
	2'10" + 2'10" + 2'10"				
	3'0" + 3'0" + 3'0"				
XX, OXXO	2'6" + 2'6"	Not Listed	Not Listed	–	–
	2'8" + 2'8"				
	2'10" + 2'10"				
	3'0" + 3'0"				
	2'6" + 2'6" + 2'6" + 2'6"				
	2'8" + 2'8" + 2'8" + 2'8"				
	2'10" + 2'10" + 2'10" + 2'10"				
	3'0" + 3'0" + 3'0" + 3'0"				

Notes:

1. Door arrangements using fewer panels than what is shown in the above chart also comply under the product approvals shown.
2. Assembly details are available from the Masonite International website (www.masonite.com) or from the technical center.
3. Installation instructions are available from the Masonite International website (www.masonite.com) or from the technical center.
4. Actual design pressure requirement for a specific building design & geographic location is determined by ASCE 7 (Minimum design loads for buildings and other structures). National, state or local building codes specify the edition required.
5. Masonite International structural, cyclic, air, water, forced entry/or impact testing is done in accordance with Miami-Dade BCCO protocol PA201, PA202 & PA203.

WOOD-EDGE STEEL DOORS

Opaque Units in 2-piece Adjustable Steel Frame

6'8" Height – Outswing

Arrangement	Singles (width)	Masonite International	Miami-Dade BCCO	DP Rating	Impact Rated
X	2'0"	COP-WL-JH4136-02	Not Listed	56.0	YES
	2'6"				
	2'8"				
	2'10"				
	3'0"				
	3'6"	Not Listed	Not Listed	–	–
Arrangement	**Multiples (width)**	**Masonite International**	**Miami-Dade BCCO**	**DP Rating**	**Impact Rated**
XO, OX, OXO	2'8" + 1'0"	Not Listed	Not Listed	–	–
	2'8" + 1'2"				
	2'10" + 1'0"				
	2'10" + 1'2"				
	3'0" + 1'0"				
	3'0" + 1'2"				
	1'0" + 2'8" + 1'0"				
	1'0" + 2'10" + 1'0"				
	1'2" + 2'8" + 1'2"				
	1'0" + 2'8" + 1'0"				
	1'0" + 3'0" + 1'0"				
	1'2" + 2'10" + 1'2"				
	1'2" + 3'0" + 1'2"				
	2'6" + 2'6" + 2'6"				
	2'8" + 2'8" + 2'8"				
	2'10" + 2'10" + 2'10"				
	3'0" + 3'0" + 3'0"				
XX, OXXO	2'6" + 2'6"	Not Listed	Not Listed	–	–
	2'8" + 2'8"				
	2'10" + 2'10"				
	3'0" + 3'0"				
	2'6" + 2'6" + 2'6" + 2'6"				
	2'8" + 2'8" + 2'8" + 2'8"				
	2'10" + 2'10" + 2'10" + 2'10"				
	3'0" + 3'0" + 3'0" + 3'0"				

Notes:

1. Door arrangements using fewer panels than what is shown in the above chart also comply under the product approvals shown.
2. Assembly details are available from the Masonite International website (www.masonite.com) or from the technical center.
3. Installation instructions are available from the Masonite International website (www.masonite.com) or from the technical center.
4. Actual design pressure requirement for a specific building design & geographic location is determined by ASCE 7 (Minimum design loads for buildings and other structures). National, state or local building codes specify the edition required.
5. Masonite International structural, cyclic, air, water, forced entry/or impact testing is done in accordance with Miami-Dade BCCO protocol PA201, PA202 & PA203.

June 17, 2002

Our continuing program of product improvement makes specifications, design and product detail subject to change without notice.

PREMDOR Collection Premium Quality Doors

Exclusively from Masonite® Masonite International Corporation

WOOD-EDGE STEEL DOORS

Opaque Units in Hollow-Metal Steel Frame

6'8" Height – Inswing

Arrangement	Singles (width)	Masonite International	Miami-Dade BCCO	DP Rating	Impact Rated
X	2'0"	COP-WL-JH4111-02	Not Listed	56.0	YES
	2'6"				
	2'8"				
	2'10"				
	3'0"				
	3'6"	Not Listed	Not Listed	–	–
Arrangement	**Multiples (width)**	**Masonite International**	**Miami-Dade BCCO**	**DP Rating**	**Impact Rated**
XO, OX, OXO	2'8" + 1'0"	Not Listed	Not Listed	–	–
	2'8" + 1'2"				
	2'10" + 1'0"				
	2'10" + 1'2"				
	3'0" + 1'0"				
	3'0" + 1'2"				
	1'0" + 2'8" + 1'0"				
	1'0" + 2'10" + 1'0"				
	1'2" + 2'8" + 1'2"				
	1'0" + 2'8" + 1'0"				
	1'0" + 3'0" + 1'0"				
	1'2" + 2'10" + 1'2"				
	1'2" + 3'0" + 1'2"				
	2'6" + 2'6" + 2'6"				
	2'8" + 2'8" + 2'8"				
	2'10" + 2'10" + 2'10"				
	3'0" + 3'0" + 3'0"				
XX, OXXO	2'6" + 2'6"	Not Listed	Not Listed	–	–
	2'8" + 2'8"				
	2'10" + 2'10"				
	3'0" + 3'0"				
	2'6" + 2'6" + 2'6" + 2'6"				
	2'8" + 2'8" + 2'8" + 2'8"				
	2'10" + 2'10" + 2'10" + 2'10"				
	3'0" + 3'0" + 3'0" + 3'0"				

Notes:

1. Door arrangements using fewer panels than what is shown in the above chart also comply under the product approvals shown.
2. Assembly details are available from the Masonite International website (www.masonite.com) or from the technical center.
3. Installation instructions are available from the Masonite International website (www.masonite.com) or from the technical center.
4. Actual design pressure requirement for a specific building design & geographic location is determined by ASCE 7 (Minimum design loads for buildings and other structures). National, state or local building codes specify the edition required.
5. Masonite International structural, cyclic, air, water, forced entry/or impact testing is done in accordance with Miami-Dade BCCO protocol PA201, PA202 & PA203.

Johnson™ EntrySystems

June 17, 2002
Our continuing program of product improvement makes specifications, design and product detail subject to change without notice.

PREMDOR Collection Premium Quality Doors
Exclusively from Masonite®
Masonite International Corporation

WOOD-EDGE STEEL DOORS

Opaque Units in Hollow-Metal Steel Frame

6'8" Height – Outswing

Arrangement	Singles (width)	Masonite International	Miami-Dade BCCO	DP Rating	Impact Rated
X	2'0"	COP-WL-JH4131-02	Not Listed	56.0	YES
	2'6"				
	2'8"				
	2'10"				
	3'0"				
	3'6"	Not Listed	Not Listed	–	–
Arrangement	**Multiples (width)**	**Masonite International**	**Miami-Dade BCCO**	**DP Rating**	**Impact Rated**
XO, OX, OXO	2'8" + 1'0"	Not Listed	Not Listed	–	–
	2'8" + 1'2"				
	2'10" + 1'0"				
	2'10" + 1'2"				
	3'0" + 1'0"				
	3'0" + 1'2"				
	1'0" + 2'8" + 1'0"				
	1'0" + 2'10" + 1'0"				
	1'2" + 2'8" + 1'2"				
	1'0" + 2'8" + 1'0"				
	1'0" + 3'0" + 1'0"				
	1'2" + 2'10" + 1'2"				
	1'2" + 3'0" + 1'2"				
	2'6" + 2'6" + 2'6"				
	2'8" + 2'8" + 2'8"				
	2'10" + 2'10" + 2'10"				
	3'0" + 3'0" + 3'0"				
XX, OXXO	2'6" + 2'6"	Not Listed	Not Listed	–	–
	2'8" + 2'8"				
	2'10" + 2'10"				
	3'0" + 3'0"				
	2'6" + 2'6" + 2'6" + 2'6"				
	2'8" + 2'8" + 2'8" + 2'8"				
	2'10" + 2'10" + 2'10" + 2'10"				
	3'0" + 3'0" + 3'0" + 3'0"				

Notes:

1. Door arrangements using fewer panels than what is shown in the above chart also comply under the product approvals shown.
2. Assembly details are available from the Masonite International website (www.masonite.com) or from the technical center.
3. Installation instructions are available from the Masonite International website (www.masonite.com) or from the technical center.
4. Actual design pressure requirement for a specific building design & geographic location is determined by ASCE 7 (Minimum design loads for buildings and other structures). National, state or local building codes specify the edition required.
5. Masonite International structural, cyclic, air, water, forced entry/or impact testing is done in accordance with Miami-Dade BCCO protocol PA201, PA202 & PA203.

AAMA/NWWDA 101/I.S.2-97
TEST REPORT SUMMARY

Rendered to:

MI HOME PRODUCTS, INC.

SERIES/MODEL: 4250, 4550, 8500, 8540
TYPE: PVC Fixed Window

	Results	
Title of Test	**Test Specimen #1**	**Test Specimen #2**
Ratings	F-C35 72 x 96	F-C50 65 x 84*
Overall Design Pressure	35 psf	50 psf
Air Infiltration	0.04 cfm/ft^2	N/A
Water Resistance	12.0 psf	N/A
Structural Test Pressure	+58.5, -63.0 psf	±75.0 psf
Deglazing	Passed	Passed
Forced Entry Resistance	Grade 40	N/A

Reference should be made to Report No. 01-39039.03 for complete test specimen description and data.

For ARCHITECTURAL TESTING, INC.

Adam Fodor, Technician

AF:tjp/nlb

Architectural Testing

AAMA/NWWDA 101/I.S.2-97 TEST REPORT

Rendered to:

MI HOME PRODUCTS, INC.
650 West Market Street
Gratz, Pennsylvania 17030-0370

Report No: 01-39039.03
Test Date: 03/09/01
Report Date: 10/19/01
Expiration Date: 03/09/05

Project Summary: Architectural Testing, Inc. (ATI) was contracted to witness tests on two Series/Model 4250, 4550, 8500, 8540, PVC fixed windows at the MI Home Products, Inc. in-plant test facility in Elizabethville, Pennsylvania. The samples tested successfully met the performance requirements for the following ratings: Test Specimen #1 F-C35 72 x 96; Test Specimen #2F-C50 65 x 84*. Test specimen descriptions and results are reported herein.

***General Note**: An asterisk (*) next to the performance grade indicates that the size tested for optional performance was smaller than the gateway size for the product type and class.*

Test Specification: The test specimen was evaluated in accordance with AAMA/NWWDA 101/I.S.2-97, *Voluntary Specifications for Aluminum, Vinyl (PVC) and Wood Windows and Glass Doors.*

Test Specimen Description:

Series/Model: 4250, 4550, 8500, 8540

Type: PVC Fixed Window

Test Specimen #1: F-C35 72 x 96

Overall Size: 5' 11-1/2" wide by 7' 11-1/2" high

Fixed Daylight Opening Size: 5' 7-3/4" wide by 7' 7-3/4" high

Glazing Type: 7/8" thick sealed insulating glass fabricated from two sheets of 3/16" thick tempered transparent glass.

130 Derry Court
York, PA 17402-9405
phone: 717.764.7700
fax: 717.764.4129
www.archtest.com

Test Specimen Description: (Continued)

Test Specimen #2: F-C50 65 x 84*

Overall Size: 5' 5" wide by 6' 11-3/4" high

Fixed Daylight Opening Size: 5' 1" wide by 6' 8" high

Glazing Type: 7/8" thick sealed insulating glass fabricated from two sheets of 1/8" thick clear annealed glass.

The following descriptions apply to all specimens.

Finish: All PVC was white

Glazing Details: The fixed lite was interior glazed onto double-sided adhesive foam tape and secured with PVC snap-fit glazing beads.

Frame Construction: The frame was constructed of extruded PVC members with mitered and welded corners. The interior frame pocket utilized a PVC snap-fit cover.

Drainage:

Description	Quantity	Location
1/2" wide by 1/8" deep weepslot	2	One in each end of sill, draining the glazing pocket into the exterior sill hollow
1/2" wide by 1/4" deep weepslot	2	One in each end of sill, draining the glazing pocket into the exterior sill hollow
1" wide by 1/8" tall weepslot	2	One in each end of sill face, draining the exterior sill hollow

Reinforcement: No reinforcement was utilized.

Installation: The test specimens were installed into 2" x 8" wood test bucks utilizing the integral nailing fin. The nailing fin was bedded in polyurethane sealant and secured with 1-1/2" long drywall screws in every hole around the perimeter.

Test Results:

The results are tabulated as follows:

Paragraph	Title of Test - Test Method	Results	Allowed
Test Specimen #1: F-C35 72 x 96			
	Air Infiltration per ASTM E 283 (See Note #1) @ 1.57 psf (25 mph)	0.04 cfm/ft^2	0.3 cfm/ft^2 max.

Note #1: *The tested specimen meets (or exceeds) the performance levels specified in AAMA/NWWDA 101/I.S. 2-97 for air infiltration.*

	Water Resistance per ASTM E 547 WTP = 4.5 psf	No leakage	No leakage
2.1.4.2	Uniform Load Structural per ASTM E 330		

Note: *The client opted to start test loads at a level higher than what is required in the referenced test specification, as reported under "Optional Performance" paragraph 4.4.2.*

	Welded Corner Test	Meets as stated	Meets as stated
	Forced Entry Resistance per ASTM F 588-97 Type: D Grade: 40		
	Hand Manipulation Test	No entry	No entry
Optional Performance			
4.3	Water Resistance per ASTM E 547 and 331 WTP = 12.0 psf	No leakage	No leakage
	Uniform Load Structural per ASTM E 330 (Measurements reported were taken on the jamb) @ 58.5 psf (exterior) @ 63.0 psf (interior)	 <0.01" <0.01"	 0.35" max. 0.35" max.
Test Specimen #2: F-C50 65 x 84*			
Optional Performance			
	Uniform Load Structural per ASTM E 330 (Measurements reported were taken on the jamb) @ 75.0 psf (exterior) @ 75.0 psf (interior)	 <0.01" <0.01"	 0.34" max. 0.34" max.

Detailed drawings, representative samples of the test specimen, and a copy of this report will be retained by ATI for a period of four years. The above results were secured by using the designated test methods and they indicate compliance with the performance requirements of the above referenced specification. This report does not constitute certification of this product, which may only be granted by the certification program administrator.

For ARCHITECTURAL TESTING, INC:

Adam Fodor
Technician

David G. Moyer, Vice President
Director of Testing Services

AF:tjp/nlb
01-39039.03

AAMA/NWWDA 101/I.S.2-97
TEST REPORT SUMMARY

Rendered to:

MI HOME PRODUCTS, INC.

SERIES/MODEL: 8540
TYPE: Vinyl Single Hung Window
RATING: H-R40 48 x 72

Title of Test	Results
Overall Design Pressure	40 psf
Operating Force	17 lb max.
Air Infiltration	0.11 cfm/ft^2
Water Resistance	6.0 psf
Structural Test Pressure	+/- 70.5 psf
Deglazing	Passed
Forced Entry Resistance	Grade 10

Reference should be made to Report No. 01-38385.01 for complete test specimen description and data.

For ARCHITECTURAL TESTING, INC.

Bill Thorr

Bill Thorr, Technician

BT:tjp

Architectural Testing

AAMA/NWWDA 101/I.S.2-97 TEST REPORT

Rendered to:

MI HOME PRODUCTS, INC.
650 West Market Street
Gratz, Pennsylvania 17030-0370

Report No:	01-38385.01
Test Dates:	11/10/00
Thru:	12/20/00
Report Date:	01/10/01
Expiration Date:	12/20/04

Project Summary: Architectural Testing, Inc. (ATI) was contracted to perform tests on a Series/Model 8540, vinyl single hung window at the MI Home Products, Inc. test facility in Elizabethville, Pennsylvania. The sample tested successfully met the performance requirements for an H-R40 48 x 72 rating. Test specimen description and results are reported herein.

Test Specification: The test specimen was evaluated in accordance with AAMA/NWWDA 101/I.S.2-97, *Voluntary Specifications for Aluminum, Vinyl (PVC) and Wood Windows and Glass Doors.*

Test Specimen Description

Series/Model: 8540

Type: Vinyl Single Hung

Overall Size: 3' 11-1/2" wide by 5' 11-1/2" high

Active Sash Size: 3' 9-1/6" wide by 2' 10-9/16" high

Fixed Daylight Opening Size: 3' 6-1/4" wide by 2' 7-3/8" high

Screen Size: 3' 7-9/16" wide by 2' 10" high

Finish: All vinyl was white.

130 Derry Court
York, PA 17402-9405
phone: 717.764.7700
fax: 717.764.4129
www.testati.com

Test Specimen Description: (Continued)

Glazing Details: The sash and fixed lite were glazed with a 7/8" thick sealed insulating glass unit fabricated from two sheets of 3/32" clear annealed glass and a metal reinforced butyl spacer system. The insulating glass was interior drop-in glazed with two-sided adhesive foam glazing tape and a snap-in vinyl glazing bead.

Weatherstripping:

Description	Quantity	Location
0.230" high by 0.187" wide backed polypile with center fin	2 Rows	Stiles
0.230" high by 0.187" wide backed polypile with center fin	1 Row	Meeting rail, sill vertical leg
3/8" diameter vinyl wrapped foam bulb	Row	Bottom rail
1/8" diameter vinyl wrapped foam bulb	1 Row	Interior of fixed meeting rail

Frame Construction: All frame members were constructed of extruded vinyl with mitered and welded corners. The fixed meeting rail was attached to the jambs with three screws per end.

Sash Construction: All sash members were constructed of extruded vinyl with mitered and welded corners.

Screen Construction: The screen frame was constructed from rolled aluminum members with keyed corners. The screening consisted of a fiberglass mesh that was secured with a flexible spline.

Hardware:

Description	Quantity	Location
Metal sweep lock	2	6-1/2" from ends of interior meeting rail
Metal keeper	2	6-1/2" from ends of fixed meeting rail
Plastic tilt latch	2	Ends of interior meeting rail
Metal pivot bar	2	Ends of bottom rail
Coil spring balance assembly	2	One per jamb
Screen leaf spring	2	6" from corners on screen top rail
Screen plunger	2	2-1/2" from bottom corners on screen stiles

Test Specimen Description: (Continued)

Drainage:

Description	Quantity	Location
1/2" long by 5/32" wide weepslot	2	1" from each end of glazing channel on bottom rails, draining the glazing channel
1/2" long by 1/16" wide weepslot	4	2-1/2" from each end of bottom rail, draining bottom rail hollow
1" wide by 3/32" high weepnotch	2	2-1/2" from ends of sill, draining sill track
1" wide by 1/8" high weepslot	2	2-1/2" from ends of sill, draining sill hollow

Reinforcement: The fixed meeting rail included a custom shaped steel reinforcement, RF-104. The sash stiles and top rail included an "H" shaped steel reinforcement, RF-1575. The bottom rail included a custom shaped aluminum reinforcement, M-1575.

Installation: The test buck was fabricated from 2" x 8" Spruce-Pine-Fir fastened with 3" screws. The window was installed with 1" galvanized roofing nails in the nail fin 8" apart. Polyurethane was used as a sealant covering the nail heads and around the exterior perimeter.

Test Results

The results are tabulated as follows:

Paragraph	Title of Test - Test Method	Results	Allowed
2.2.1.6.1	Operating Force	17 lbs	30 lbs max.
	Air Infiltration per ASTM E 283 (See Note #1)		
	@ 1.57 psf (25 mph)	0.11 cfm/ft^2	0.30 cfm/ft^2 max.

Note #1: *The tested specimen meets (or exceeds) the performance levels specified in AAMA/NWWDA 101/I.S. 2-97 for air infiltration.*

	Water Resistance per ASTM E 547-96 (with and without screen) WTP = 6.00 psf	No leakage	No leakage @ 2.86 psf
2.1.4.2	Uniform Load Structural per ASTM E 330-97 (Measurements reported were taken on the bottom rail)		
	@ 60.0 psf (exterior)	0.06"	0.18" max. @ 22.5 psf
	@ 60.0 psf (interior)	0.15"	0.18" max. @ 22.5 psf

Test Results: (Continued)

Paragraph	Title of Test - Test Method	Results	Allowed
2.2.1.6.2	Deglazing Test per ASTM E 987 In operating direction at 70 lbs		
	Meeting Rail	0.12"/24%	0.50"/100%
	Bottom Rail	0.12"/24%	0.50"/100%
	In remaining direction at 50 lbs		
	Stile	0.09"/19%	0.50"/100%
	Stile	0.09"/19%	0.50"/100%
2.1.7	Welded Corner Test	Meets as stated	Meets as stated
2.1.8	Forced Entry Resistance per ASTM F 588-97		
	Type: A Grade: 10		
	Lock Manipulation Test	No entry	No entry
	Test A1 through A5	No entry	No entry
	Test A7	No entry	No entry
	Lock Manipulation Test	No entry	No entry
Optional Performance			
4.3	Water Resistance per ASTM E 547-96 and ASTM E 331-96 (with and without screen) WTP = 6.00 psf	No leakage	No leakage
4.4.2	Uniform Load Structural per ASTM E 330-97 (Measurements reported were taken on the bottom rail)		
	@ 60 psf (exterior)	0.06"	0.18" max.
	@ 60 psf (interior)	0.15"	0.18" max.

Structural Load Results for the North Carolina State Building Code:

Title of Test – Test Method	Results
Design Pressure @ 47 psf (interior) for 33 seconds	No damage
Design Pressure @47 psf (exterior) for 33 seconds	No damage
Structural Overload @ 64.5 psf (interior) for 10 seconds	No damage
Structural Overload @ 64.5 psf (exterior) for 10 seconds	No damage
Structural Overload @ 70.5 psf (interior) for 10 seconds	No damage
Structural Overload @ 70.5 psf (exterior) for 10 seconds	No damage

Detailed drawings, representative samples of the test specimen, and a copy of this report will be retained by ATI for a period of four years. The above results were secured by using the designated test methods and they indicate compliance with the performance requirements of the above referenced specification. This report does not constitute certification of this product which may only be granted by the certification program administrator.

For ARCHITECTURAL TESTING, INC:

Bill Thorr

Bill Thorr
Technician

BT:tjp
01-38385.01

Allen N. Reeves

Allen N. Reeves, P.E.
Director – Engineering Services
11 JANUARY 2001

NORTH CAROLINA PROFESSIONAL SEAL 23380 ENGINEER ALLEN N. REEVES

AAMA/NWWDA 101/I.S.2-97
TEST REPORT SUMMARY

Rendered to:

MI HOME PRODUCTS, INC.

SERIES/MODEL: 650 Fin
TYPE: Aluminum Single Hung Window

Title of Test	Results
Rating	H-R40 52 x 72
Overall Design Pressure	+45.0 psf -47.2 psf
Operating Force	11 lb max.
Air Infiltration	0.13 cfm/ft^2
Water Resistance	6.00 psf
Structural Test Pressure	+67.5 psf -70.8 psf
Deglazing	Passed
Forced Entry Resistance	Grade 10

Reference should be made to Report No. 01-41134.01 dated 03/26/02 for complete test specimen description and data.

For ARCHITECTURAL TESTING, INC.

Mark A. Hess, Technician

MAH:nlb

ALLEN M. REEVES
CERTIFICATE NO. 13354
STATE OF FLORIDA
PROFESSIONAL ENGINEER

Allen M. Reeves
1 APRIL 2002

Architectural Testing

AAMA/NWWDA 101/I.S.2-97 TEST REPORT

Rendered to

MI HOME PRODUCTS, INC.
650 West Market Street
P.O. Box 370
Gratz, Pennsylvania 17030-0370

Report No: 01-41134.01
Test Date: 03/07/02
Report Date: 03/26/02
Expiration Date: 03/07/06

Project Summary: Architectural Testing, Inc. (ATI) was contracted by MI Home Products, Inc. to perform tests on Series/Model 650 Fin, aluminum single hung window at their facility located in Elizabethville, Pennsylvania. The samples tested successfully met the performance requirements for a H-R40 52 x 72 rating.

Test Specification: The test specimen was evaluated in accordance with AAMA/NWWDA 101/I.S.2-97, *Voluntary Specifications for Aluminum, Vinyl (PVC) and Wood Windows and Glass Doors.*

Test Specimen Description:

Series/Model: 650 Fin

Type: Aluminum Single Hung Window

Overall Size: 4' 4-1/4" wide by 6' 0-3/8" high

Active Sash Size: 4' 1-3/4" wide by 3' 0-5/8" high

Daylight Opening Size: 3' 11-3/8" wide by 2' 9-1/2" high

Screen Size: 4' 0-1/4" wide by 2' 11-1/8" high

Finish: All aluminum was white.

Glazing Details: The active and fixed lites utilized 5/8" thick, sealed insulating glass constructed from two sheets of 1/8" thick, clear annealed glass and a metal reinforced butyl spacer system. The active sash was channel glazed utilizing a flexible vinyl wrap-around gasket. The fixed lite was interior glazed against double-sided adhesive foam tape and secured with PVC snap-in glazing beads.

130 Derry Court
York, PA 17402-9405
phone: 717.764.7700
fax: 717.764.4129
www.archtest.com

Allen M. Reeves
1 APRIL 2002

REEVES
NO. 13354
STATE OF FLORIDA
PROFESSIONAL ENGINEER

Test Specimen Description: (Continued)

Weatherstripping:

Description	Quantity	Location
0.230" high by 0.270" backed polypile with center fin	1 Row	Fixed meeting rail
0.250" high by 0.187" backed polypile with center fin	2 Rows	Active sash stiles
1/2" x 1/2" dust plug	4 Pieces	Active sash, top and bottom of stiles
1/4" foam-filled vinyl bulb seal	1 Row	Active sash, bottom rail

Frame Construction: The frame was constructed of extruded aluminum with coped, butted, and sealed corners fastened with two #8 x 1" screws through the head and sill into each jamb screw boss. End caps were utilized on the ends of the fixed meeting rail and secured with two 1-1/4" screws per cap. Meeting rail was secured to the frame utilizing two 1-1/4" screws.

Sash Construction: The sash was constructed of extruded aluminum with coped, butted, and sealed corners fastened with two #8 x 1-1/2" screws through the rails into each jamb screw boss.

Screen Construction: The screen was constructed from roll-formed aluminum with keyed corners. The fiberglass mesh was secured with a flexible spline.

Hardware:

Description	Quantity	Location
Metal cam lock with keeper		Midspan, active meeting rail with keeper adjacent on fixed meeting rail
Plastic tilt latch	2	Active sash, meeting rail ends
Metal tilt pin	2	Active sash, bottom rail ends
Balance assembly	2	One in each jamb
Screen plunger	2	4" from rail ends on top rail

Allen N. Reeves
1 APRIL 2002

ALLEN N. REEVES
CERTIFICATE
NO. 19334
STATE OF
FLORIDA
PROFESSIONAL ENGINEER

Test Specimen Description: (Continued)

Drainage: Sloped sill

Reinforcement: No reinforcement was utilized.

Installation: The test specimen was installed into a 2 x 8 #2 Spruce-Pine-Fir wood test buck with #8 x 1-5/8" drywall screws every 8" on center around the nail fin. Polyurethane was used as a sealant under the nail fin and around the exterior perimeter.

Test Results:

The results are tabulated as follows:

Paragraph	Title of Test - Test Method	Results	Allowed
2.2.1.6.1	Operating Force	11 lbs	30 lbs max
	Air Infiltration (ASTM E 283-91) @ 1.57 psf (25 mph)	0.13 cfm/ft^2	0.3 cfm/ft^2 max

Note #1: *The tested specimen meets the performance levels specified in AAMA/NWWDA 101/I.S. 2-97 for air infiltration.*

	Water Resistance (ASTM E 547-00) (with and without screen) WTP = 2.86 psf	No leakage	No leakage
2.1.4.1	Uniform Load Deflection (ASTM E 330-97) (Measurements reported were taken on the meeting rail) (Loads were held for 33 seconds)		
	@ 25.9 psf (positive)	0.42"*	0.26" max.
	@ 34.7 psf (negative)	0.43"*	0.26" max.

**Exceeds L/175 for deflection, but passes all other test requirements.*

2.1.4.2	Uniform Load Structural (ASTM E 330-97) (Measurements reported were taken on the meeting rail) (Loads were held for 10 seconds)		
	@ 38.9 psf (positive)	0.02"	0.18" max.
	@ 52.1 psf (negative)	0.02"	0.18" max.

Allen N. Reeves
1 APRIL 2002

ALLEN N. REEVES
CERTIFICATE
NO. 19374
STATE OF
FLORIDA
PROFESSIONAL ENGINEER

Test Specimen Description: (Continued)

Paragraph	Title of Test - Test Method	Results	Allowed
2.2.1.6.2	Deglazing Test (ASTM E 987)		
	In operating direction at 70 lbs		
	Meeting rail	0.12"/25%	0.50"/100%
	Bottom rail	0.12"/25%	0.50"/100%
	In remaining direction at 50 lbs		
	Left stile	0.06"/12%	0.50"/100%
	Right stile	0.06"/12%	0.50"/100%
	Forced Entry Resistance (ASTM F 588-97)		
	Type: A Grade: 10		
	Lock Manipulation Test	No entry	No entry
	Tests A1 through A5	No entry	No entry
	Test A7	No entry	No entry
	Lock Manipulation Test	No entry	No entry
Optional Performance			
4.3	Water Resistance (ASTM E 547-00) (with and without screen) WTP = 6.00 psf	No leakage	No leakage
	Uniform Load Deflection (ASTM E 330-97) (Measurements reported were taken on the meeting rail) (Loads were held for 33 seconds)		
	@ 45.0 psf (positive)	0.47"*	0.26" max.
	@ 47.2 psf (negative)	0.46"*	0.26" max.

**Exceeds L/175 for deflection, but passes all other test requirements.*

	Uniform Load Structural (ASTM E 330-97) (Measurements reported were taken on the meeting rail) (Loads were held for 10 seconds)		
	@ 67.5 psf (positive)	0.05"	0.18" max.
	@ 70.8 psf (negative)	0.05"	0.18" max.

Allen N. Reyes
1 APRIL 2002

ALLEN N. REYES
CERTIFICATE NO. 19354
STATE OF FLORIDA
PROFESSIONAL ENGINEER

Detailed drawings, representative samples of the test specimen, and a copy of this report will be retained by ATI for a period of four years. The above results were secured by using the designated test methods and they indicate compliance with the performance requirements of the above referenced specification. This report does not constitute certification of this product, which may only be granted by the certification program administrator.

For ARCHITECTURAL TESTING, INC:

Mark A. Hess
Technician

Allen N. Reeves, P.E.
Director - Engineering Services
1 APRIL 2002

MAH:nlb
01-41134.01

ALLEN N. REEVES
CERTIFICATE
NO. 19904
STATE OF
FLORIDA
PROFESSIONAL ENGINEER

AAMA/NWWDA 101/I.S.2-97
TEST REPORT SUMMARY

Rendered to:

MI HOME PRODUCTS, INC.

SERIES/MODEL: 650
TYPE: Aluminum Picture Window

Title of Test	Results
Rating	F-R45 60 x 80
Overall Design Pressure	+45.0 psf -47.2 psf
Air Infiltration	0.04 cfm/ft^2
Water Resistance	8.25 psf
Structural Test Pressure	+67.5 psf -70.8 psf
Forced Entry Resistance	Grade 10

Reference should be made to Report No. 01-41135.01 dated 03/26/02 for complete test specimen description and data.

For ARCHITECTURAL TESTING, INC.

Mark A. Hess

Mark A. Hess, Technician

MAH:nlb

Allen N. Reeves
1 APRIL 2002

ALLEN N. REEVES
CERTIFICATE
NO. 17074
STATE OF
FLORIDA
PROFESSIONAL ENGINEER

Architectural Testing

AAMA/NWWDA 101/I.S.2-97 TEST REPORT

Rendered to

MI HOME PRODUCTS, INC.
650 West Market Street
P.O. Box 370
Gratz, Pennsylvania 17030-0370

Report No: 01-41135.01
Test Date: 03/07/02
Report Date: 03/26/02
Expiration Date: 03/07/06

Project Summary: Architectural Testing, Inc. (ATI) was contracted by MI Home Products, Inc. to perform tests on Series/Model 650, aluminum picture window at their facility located in Elizabethville, Pennsylvania. The samples tested successfully met the performance requirements for a F-R45 60 x 80 rating.

Test Specification: The test specimen was evaluated in accordance with AAMA/NWWDA 101/I.S.2-97, *Voluntary Specifications for Aluminum, Vinyl (PVC) and Wood Windows and Glass Doors.*

Test Specimen Description:

Series/Model: 650

Type: Aluminum Picture Window

Overall Size: 5' 0" wide by 6' 8" high

Daylight Opening Size: 4' 9-1/4" wide by 6' 5-1/4" high

Finish All aluminum was white.

Glazing Details: The test specimen utilized 7/8" thick, sealed insulating glass constructed from two sheets of 3/16" thick, clear annealed glass and a metal reinforced butyl spacer system. The glass was interior glazed against double-sided adhesive foam tape and secured with aluminum snap-in glazing beads.

130 Derry Court
York, PA 17402-9405
phone: 717.764.7700
fax: 717.764.4129
www.archtest.com

Allen N. Reeves
1 APR 12 2002

ALLEN N. REEVES
CERTIFICATE NO. 11864
STATE OF FLORIDA
PROFESSIONAL ENGINEER

Test Specimen Description: (Continued)

Frame Construction: The frame was constructed of extruded aluminum with coped, butted, and sealed corners fastened with two #8 x 1" screws through the head and sill into each jamb screw boss.

Reinforcement: No reinforcement was utilized.

Installation: The test specimen was installed into a 2 x 8 #2 Spruce-Pine-Fir wood test buck. #8 x 2-1/2" installation screws were utilized 18" on center around the interior perimeter. Polyurethane was utilized to seal the exterior.

Test Results:

The results are tabulated as follows:

Paragraph	Title of Test - Test Method	Results	Allowed
	Air Infiltration (ASTM E 283-91)		
	@ 1.57 psf (25 mph)	0.04 cfm/ft^2	0.3 cfm/ft^2 max.

***Note #1:** The tested specimen meets the performance levels specified in AAMA/NWWDA 101/I.S. 2-97 for air infiltration.*

	Water Resistance (ASTM E 547-00)		
	WTP = 2.86 psf	No leakage	No leakage
2.1.4.1	Uniform Load Deflection (ASTM E 330-97)		
	(Measurements reported were taken on the jamb)		
	(Loads were held for 33 seconds)		
	@ 25.9 psf (positive)	0.01"	0.41" max.
	@ 34.7 psf (negative)	0.01"	0.41" max.
2.1.4.2	Uniform Load Structural (ASTM E 330-97)		
	(Measurements reported were taken on the jamb)		
	(Loads were held for 10 seconds)		
	@ 38.9 psf (positive)	0.0"	0.29" max.
	@ 52.1 psf (negative)	0.01"	0.29" max.

ALLEN N. REEVES
LICENSE
NO. 12554
STATE OF
FLORIDA
PROFESSIONAL ENGINEER

Allen N. Reeves
1 APRIL 2002

Test Results: (Continued)

Paragraph	Title of Test - Test Method	Results	Allowed
	Forced Entry Resistance (ASTM F 588-97)		
	Type: D Grade: 10		
	Hand and Tool Manipulation Test	No entry	No entry
Optional Performance			
4.3	Water Resistance (ASTM E 547-00) WTP = 8.25 psf	No leakage	No leakage
	Uniform Load Deflection (ASTM E 330-97) (Measurements reported were taken on the jamb) (Loads were held for 33 seconds)		
	@ 45.0 psf (positive)	0.02"	0.41" max.
	@ 47.2 psf (negative)	0.02"	0.41" max.
	Uniform Load Structural (ASTM E 330-97) (Measurements reported were taken on the jamb) (Loads were held for 10 seconds)		
	@ 67.5 psf (positive)	0.01"	0.29" max.
	@ 70.8 psf (negative)	0.02"	0.29" max.

Detailed drawings, representative samples of the test specimen, and a copy of this report will be retained by ATI for a period of four years. The above results were secured by using the designated test methods and they indicate compliance with the performance requirements of the above referenced specification. This report does not constitute certification of this product, which may only be granted by the certification program administrator.

For ARCHITECTURAL TESTING, INC.

Mark A. Hess
Technician

MAH:nlb
01-41135.01

Allen N. Reeves, P.E.
Director - Engineering Services
1 APRIL 2002

ALLEN N. REEVES
CERTIFICATE
NO. 12354
STATE OF
FLORIDA
PROFESSIONAL ENGINEER

MI HOME PRODUCTS

- PRIME ALUMINUM WINDOWS -

INSTALLATION INSTRUCTIONS FOR "NAIL FIN" PRODUCTS

MI Home Products appreciates your recent purchase of a maintenance free prime window, which will not rust, rot, mildew, or warp. This is a quality product that left our factory in good condition – proper handling and installation are just as important as good design and workmanship. Please follow these recommendations to allow this product to complete its function.

1 Handle units one at a time in the closed and locked position and take care not to scratch frame or glass or to bend the nailing fin.

2. Set unit plumb and square into opening and make sure that there is 3/16" ± 1/16" clearance around the frame. Fasten unit into opening in the closed and locked position, making sure that fasteners are screwed in straight in order to avoid twisting or bowing of the frame. Make sure that sill is straight and level. Check operation of unit before any and all fasteners are set.

3. Use # 8 sheet metal or wood screws with a minimum of 1" penetration into the framing (stud). Place first screws (two at each corner) 3" from end of fin. For positive and negative DPs (design pressures) up to **35**, do not exceed **24"** spacing of additional screws. For DPs from **35.1** to **50**, do not exceed **18"**. Install load bearing shim adjacent to each anchor. Use shim where space exceeds 1/16".

4. Flash over head and caulk outside perimeter in accordance with code requirements and good installation practices.

5. Fill voids between frame and construction with loose batten type insulation or <u>non-expanding</u> aerosol foam specifically formulated for windows and doors to eliminate drafts. The use of <u>expanding</u> aerosol type insulating foam, which can bow the frame, waives all stated warranties.

6. Remove plaster, mortar, paint and any other debris that may have collected on the unit and make sure that sash/vent tracks and interlocks are also clear. Do not use abrasives, solvents, ammonia, vinegar, alkaline, or acid solutions for clean-up, especially with insulated glass units as their use could cause chemical breakdown of the glass seal. Take care not to scratch glass; scratches severely weaken glass and it could eventually break from thermal expansion and contraction. Clean units with water and mild detergent as you would you automobile.

CAUTION -

MI Home Products or its representatives are unable to control and cannot assume responsibility for the selection and placement of their products in a building or structure in a manner required by laws, statutes, and/or building codes. The purchaser is solely responsible for knowledge of and adherence to the same. MI Home Products window products are not provided with safety glazing unless specifically ordered with such. Many laws and codes require safety glazing near doors, bathtubs, and shower enclosures. Also be aware of emergency egress code requirements.

Corporate Headquarters:
650 West Market St.
Gratz, PA 17030-0370
(717) 365-3300

MANUEL MARTINEZ
CERTIFICATE
NO 47162
STATE OF
FLORIDA