YOONHWAK KIM
LICENSE
No. 86367
STATE OF FLORIDA
PROFESSIONAL ENGINEER

07/01/2021

This document has been electronically signed and sealed using a Digital Signature. Printed copies without an original signature must be verified using the original electronic version.

FL REG# 278, Yoonhwak Kim, FL PE #86367

Alpine, an ITW Company
6750 Forum Drive, Suite 305
Orlando, FL 32821
Phone: (800)755-6001
www.alpineitw.com

Site Information:	**Page 1:**
Customer: W. B. Howland Company, Inc.	*Job Number:* 21-5719
Job Description: Jones/Freeman	
Address: 587 Pinehurst Dr, LAKE CITY, FL	

Job Engineering Criteria:	
Design Code: FBC 7th Ed. 2020 Res	*IntelliVIEW Version:* 21.01.01A *JRef #:* 1X6P2150009
Wind Standard: ASCE 7-16 *Wind Speed (mph):* 130 *Building Type:* Closed	*Design Loading (psf):* 40.00

This package contains general notes pages, 55 truss drawing(s) and 5 detail(s).

Item	Drawing Number	Truss	Item	Drawing Number	Truss
1	182.21.1412.36950	A01	2	182.21.1412.39120	A02
3	182.21.1412.40480	A03	4	182.21.1412.41733	A04
5	182.21.1412.43153	A05	6	182.21.1412.44603	A06
7	182.21.1412.47723	A07	8	182.21.1412.50813	A08
9	182.21.1412.53830	A09	10	182.21.1412.56853	A10
11	182.21.1412.58663	A11	12	182.21.1413.00340	A12
13	182.21.1413.01963	A13	14	182.21.1413.03210	A14
15	182.21.1413.04747	A15	16	182.21.1413.06010	A16
17	182.21.1413.08057	A17	18	182.21.1413.10643	A18
19	182.21.1413.15880	A19	20	182.21.1413.19050	B01
21	182.21.1413.21187	B02	22	182.21.1413.23617	B03
23	182.21.1413.26123	B04	24	182.21.1413.29303	B05
25	182.21.1413.32690	B05	26	182.21.1413.39580	B06
27	182.21.1413.43327	B07	28	182.21.1413.48590	B08
29	182.21.1413.51160	B09	30	182.21.1414.03733	B10
31	182.21.1414.12647	C01	32	182.21.1414.16617	HJ01
33	182.21.1414.19427	HJ02	34	182.21.1414.21117	J02
35	182.21.1414.23373	J03	36	182.21.1414.24683	J04
37	182.21.1414.26117	J05	38	182.21.1414.27437	J06
39	182.21.1414.28717	J07	40	182.21.1414.30033	J08
41	182.21.1414.31293	J09	42	182.21.1414.32827	J10
43	182.21.1414.34090	J11	44	182.21.1414.38927	PB01
45	182.21.1414.40163	PB02	46	182.21.1414.41830	PB03
47	182.21.1414.43280	PB04	48	182.21.1414.44747	PB05
49	182.21.1414.46023	PB06	50	182.21.1414.47447	PB07
51	182.21.1414.48740	PB08	52	182.21.1414.50397	PB09

YOONHWAK KIM
LICENSE
No. 86367
STATE OF
FLORIDA
PROFESSIONAL ENGINEER

07/01/2021

This document has been electronically signed and sealed using a Digital Signature. Printed copies without an original signature must be verified using the original electronic version.

FL REG# 278, Yoonhwak Kim, FL PE #86367

Alpine, an ITW Company
6750 Forum Drive, Suite 305
Orlando, FL 32821
Phone: (800)755-6001
www.alpineitw.com

Site Information:	**Page 2:**
Customer: W. B. Howland Company, Inc.	*Job Number:* 21-5719
Job Description: Jones/Freeman	
Address: 587 Pinehurst Dr, LAKE CITY, FL	

Item	Drawing Number	Truss
53	182.21.1414.51850	PB10
55	182.21.1414.57373	PB12
57	GBLLETIN0118	
59	PB160160118	

Item	Drawing Number	Truss
54	182.21.1414.53233	PB11
56	A14015ENC160118	
58	BRCLBSUB0119	
60	A14030ENC160118	

General Notes

Truss Design Engineer Scope of Work, Design Assumptions and Design Responsibilities:
The design responsibilities assumed in the preparation of these design drawings are those specified in ANSI/TPI 1, Chapter 2; and the National Design Standard for Metal Plate Connected Wood Truss Construction, by the Truss Plate Institute. The truss component designs conform to the applicable provisions of ANSI/TPI 1 and NDS, the National Design Specification for Wood Construction by AWC. The truss component designs are based on the specified loading and dimension information furnished by others to the Truss Design Engineer. The Truss Design Engineer has no duty to independently verify the accuracy or completeness of the information provided by others and may rely on that information without liability. The responsibility for verification of that information remains with others neither employed nor controlled by the Truss Design Engineer. The Truss Design Engineer's seal and signature on the attached drawings, or cover page listing these drawings, indicates acceptance of professional engineering responsibility solely for the truss component designs and not for the technical information furnished by others which technical information and consequences thereof remain their sole responsibility.

The suitability and use of these drawings for any particular structure is the responsibility of the Building Designer in accordance with ANSI/TPI 1 Chapter 2. The Building Designer is responsible for determining that the dimensions and loads for each truss component match those required by the plans and by the actual use of the individual component, and for ascertaining that the loads shown on the drawings meet or exceed applicable building code requirements and any additional factors required in the particular application. Truss components using metal connector plates with integral teeth shall not be placed in environments that will cause the moisture content of the wood in which plates are embedded to exceed 19% and/or cause corrosion of connector plates and other metal fasteners.

The Truss Design Engineer shall not be responsible for items beyond the specific scope of the agreed contracted work set forth herein, including but not limited to: verifying the dimensions of the truss component, calculation of any of the truss component design loads, inspection of the truss components before or after installation, the design of temporary or permanent bracing and their attachment required in the roof and/or floor systems, the design of diaphragms or shear walls, the design of load transfer connections to and from diaphragms and shear walls, the design of load transfer to the foundation, the design of connections for truss components to their bearing supports, the design of the bearing supports, installation of the truss components, observation of the truss component installation process, review of truss assembly procedures, sequencing of the truss component installation, construction means and methods, site and/or worker safety in the installation of the truss components and/or its connections.

This document may be a high quality facsimile of the original engineering document which is a digitally signed electronic file with third party authentication. A wet or embossed seal copy of this engineering document is available upon request.

Temporary Lateral Restraint and Bracing:
Temporary lateral restraint and diagonal bracing shall be installed according to the provisions of BCSI chapters B1, B2, B7 and/or B10 (Building Component Safety Information, by TPI and SBCA), or as specified by the Building Designer or other Registered Design Professional. The required locations for lateral restraint and/or bracing depicted on these drawings are only for the permanent lateral support of the truss members to reduce buckling lengths, and do not apply to and may not be relied upon for the temporary stability of the truss components during their installation.

Permanent Lateral Restraint and Bracing:
The required locations for lateral restraint or bracing depicted on these drawings are for the permanent lateral support of the truss members to reduce buckling lengths. Permanent lateral support shall be installed according to the provisions of BCSI chapters B3, B7 and/or B10, or as specified by the Building Designer or other Registered Design Professional. These drawings do not depict or specify installation/erection bracing, wind bracing, portal bracing or similar building stability bracing which are parts of the overall building design to be specified, designed and detailed by the Building Designer.

Connector Plate Information:
Alpine connector plates are made of ASTM A653 or ASTM A1063 galvanized steel with the following designations, gauges and grades: W=Wave, 20ga, grade 40; H=High Strength, 20ga, grade 60; S=Super Strength, 18ga, grade 60. Information on model code compliance is contained in the ICC Evaluation Service report ESR-1118, available on-line at www.icc-es.org.

Fire Retardant Treated Lumber:
Fire retardant treated lumber must be properly re-dried and maintained below 19% or less moisture level through all stages of construction and usage. Fire retardant treated lumber may be more brittle than untreated lumber. Special handling care must be taken to prevent breakage during all handling activities.

General Notes (continued)

Key to Terms:
Information provided on drawings reflects a summary of the pertinent information required for the truss design. Detailed information on load cases, reactions, member lengths, forces and members requiring permanent lateral support may be found in calculation sheets available upon written request.

BCDL = Bottom Chord standard design Dead Load in pounds per square foot.
BCLL = Bottom Chord standard design Live Load in pounds per square foot.
CL = Certified lumber.
Des Ld = total of TCLL, TCDL, BCLL and BCDL Design Load in pounds per square foot.
FRT = Fire Retardant Treated lumber.
FRT-DB = D-Blaze Fire Retardant Treated lumber.
FRT-DC = Dricon Fire Retardant Treated lumber.
FRT-FP = FirePRO Fire Retardant Treated lumber.
FRT-FL = FlamePRO Fire Retardant Treated lumber.
FRT-FT = FlameTech Fire Retardant Treated lumber.
FRT-PG = PYRO-GUARD Fire Retardant Treated lumber.
g = green lumber.
HORZ(LL) = maximum Horizontal panel point deflection due to Live Load, in inches.
HORZ(TL) = maximum Horizontal panel point long term deflection in inches, due to Total Load, including creep adjustment.
HPL = additional Horizontal Load added to a truss Piece in pounds per linear foot or pounds.
Ic = Incised lumber.
FJ = Finger Jointed lumber.
L/# = user specified divisor for limiting span/deflection ratio for evaluation of actual L/defl value.
L/defl = ratio of Length between bearings, in inches, divided by the vertical Deflection due to creep, in inches, at the referenced panel point. Reported as 999 if greater than or equal to 999.
Loc = Location, starting location of left end of bearing or panel point (joint) location of deflection.
Max BC CSI = Maximum bending and axial Combined Stress Index for Bottom Chords for of all load cases.
Max TC CSI = Maximum bending and axial Combined Stress Index for Top Chords for of all load cases.
Max Web CSI= Maximum bending and axial Combined Stress Index for Webs for of all load cases.
NCBCLL = Non-Concurrent Bottom Chord design Live Load in pounds per square foot.
PL = additional Load applied at a user specified angle on a truss Piece in pounds per linear foot or pounds.
PLB = additional vertical load added to a Bottom chord Piece of a truss in pounds per linear foot or pounds
PLT = additional vertical load added to a Top chord Piece of a truss in pounds per linear foot or pounds.
PP = Panel Point.
R = maximum downward design Reaction, in pounds, from all specified gravity load cases, at the indicated location (Loc).
-R = maximum upward design Reaction, in pounds, from all specified gravity load cases, at the identified location (Loc).
Rh = maximum horizontal design Reaction in either direction, in pounds, from all specified gravity load cases, at the indicated location (Loc).
RL = maximum horizontal design Reaction in either direction, in pounds, from all specified non-gravity (wind or seismic) load cases, at the indicated location (Loc).
Rw = maximum downward design Reaction, in pounds, from all specified non-gravity (wind or seismic) load cases, at the identified location (Loc).
TCDL = Top Chord standard design Dead Load in pounds per square foot.
TCLL = Top Chord standard design Live Load in pounds per square foot.
U = maximum Upward design reaction, in pounds, from all specified non-gravity (wind or seismic) load cases, at the indicated location (Loc).
VERT(CL) = maximum Vertical panel point deflection in inches due to Live Load and Creep Component of Dead Load in inches.
VERT(CTL) = maximum Vertical panel point deflection ratios due to Live Load and Creep Component of Dead Load, and maximum long term Vertical panel point deflection in inches due to Total load, including creep adjustment.
VERT(LL) = maximum Vertical panel point deflection in inches due to Live Load.
VERT(TL) = maximum Vertical panel point long term deflection in inches due to Total load, including creep adjustment.
W = Width of non-hanger bearing, in inches.

Refer to ASCE-7 for Wind and Seismic abbreviations.
Uppercase Acronyms not explained above are as defined in TPI 1.

References:

1. AWC: American Wood Council; 222 Catoctin Circle SE, Suite 201; Leesburg, VA 20175; www.awc.org.
2. ICC: International Code Council; www.iccsafe.org.
3. Alpine, a division of ITW Building Components Group Inc.: 514 Earth City Expressway, Suite 242, Earth City, MO 63045; www.alpineitw.com.
4. TPI: Truss Plate Institute, 2670 Crain Highway, Suite 203, Waldorf, MD 20601; www.tpinst.org.
5. SBCA: Wood Truss Council of America, 6300 Enterprise Lane, Madison, WI 53719; www.sbcindustry.com.

SEQN: 626707 GABL FROM: CDM	Ply: 1 Qty: 1	**Job Number:** 21-5719 Jones/Freeman **Truss Label:** A01	Cust: R 215 JRef:1X6P2150009 T35 DrwNo: 182.21.1412.36950 / YK 07/01/2021

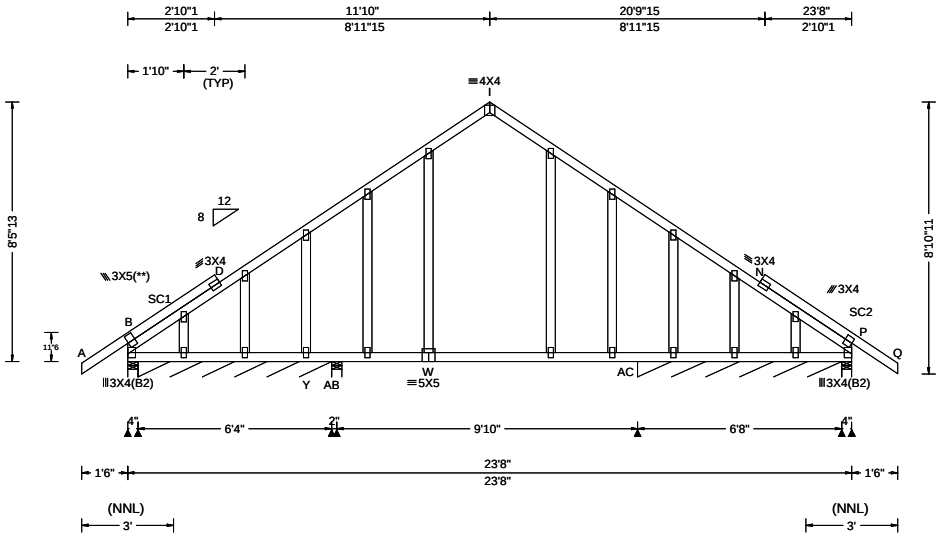

Loading Criteria (psf)

TCLL: 20.00
TCDL: 10.00
BCLL: 0.00
BCDL: 10.00
Des Ld: 40.00
NCBCLL: 10.00
Soffit: 2.00
Load Duration: 1.25
Spacing: 24.0 "

Wind Criteria

Wind Std: ASCE 7-16
Speed: 130 mph
Enclosure: Closed
Risk Category: II
EXP: C Kzt: NA
Mean Height: 15.00 ft
TCDL: 5.0 psf
BCDL: 5.0 psf
MWFRS Parallel Dist: 0 to h/2
C&C Dist a: 3.00 ft
Loc. from endwall: Any
GCpi: 0.18
Wind Duration: 1.60

Snow Criteria (Pg,Pf in PSF)

Pg: NA Ct: NA CAT: NA
Pf: NA Ce: NA
Lu: NA Cs: NA
Snow Duration: NA

Building Code:
FBC 7th Ed. 2020 Res.
TPI Std: 2014
Rep Fac: Yes
FT/RT:20(0)/10(0)
Plate Type(s):
WAVE

Defl/CSI Criteria

PP Deflection in	loc	L/defl	L/#
VERT(LL): 0.055	W	999	240
VERT(CL): 0.106	W	999	180
HORZ(LL): 0.029	H	-	-
HORZ(TL): 0.056	H	-	-

Creep Factor: 2.0
Max TC CSI: 0.371
Max BC CSI: 0.471
Max Web CSI: 0.160

VIEW Ver: 21.01.01A.0521.20

▲ Maximum Reactions (lbs), or *=PLF

Loc	Gravity R+	/ R-	/ Rh	Non-Gravity / Rw	/ U	/ RL
B	549	/-	/-	/290	/-	/104
B*	38	/-7	/-	/21	/5	/-
AB	475	/-	/-	/225	/-	/-
AC*	94	/-	/-	/55	/-	/-
P	550	/-	/-	/284	/-	/-
Y		/-99				

Wind reactions based on MWFRS

B	Brg Width = 4.0	Min Req = 1.5
B	Brg Width = 76.0	Min Req = -
AB	Brg Width = 4.0	Min Req = 1.5
AC	Brg Width = 80.0	Min Req = -
P	Brg Width = 4.0	Min Req = 1.5

Bearings B, B, AB, AC, & P are a rigid surface.

Members not listed have forces less than 375#

Maximum Top Chord Forces Per Ply (lbs)

Chords	Tens.	Comp.	Chords	Tens.	Comp.
B - D	0	-451	I - N	16	-527
D - I	74	-525	N - P	0	-452

Maximum Bot Chord Forces Per Ply (lbs)

Chords	Tens.	Comp.	Chords	Tens.	Comp.
B - W	711	0	W - P	711	0

Lumber

Top chord: 2x4 SP #2;
Bot chord: 2x4 SP #2;
Webs: 2x4 SP #3;
Stack Chord: SC1 2x4 SP #2;
Stack Chord: SC2 2x4 SP #2;

Plating Notes

All plates are 2X4 except as noted.

(**) 1 plate(s) require special positioning. Refer to scaled plate plot details for special positioning requirements.

Loading

Gable end supports 8" max rake overhang. Top chord must not be cut or notched.

Truss passed check for 20 psf additional bottom chord live load in areas with 42"-high x 24"-wide clearance.

Purlins

In lieu of structural panels use purlins to brace TC @ 24" oc.

Wind

Wind loads based on MWFRS with additional C&C member design.

Wind loading based on both gable and hip roof types.

Additional Notes

See DWGS A14015ENC160118 & GBLLETIN0118 for gable wind bracing and other requirements.

Stacked top chord must NOT be notched or cut in area (NNL). Dropped top chord braced at 24" oc intervals. Attach stacked top chord (SC) to dropped top chord in notchable area using 3x4 tie-plates 24" oc. Center plate on stacked/dropped chord interface, plate length perpendicular to chord length. Splice top chord in notchable area using 3x6.

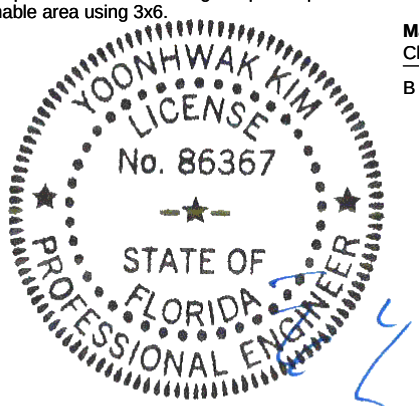

FL REG# 278, Yoonhwak Kim, FL PE #86367
07/01/2021

****WARNING**** READ AND FOLLOW ALL NOTES ON THIS DRAWING!
****IMPORTANT**** FURNISH THIS DRAWING TO ALL CONTRACTORS INCLUDING THE INSTALLERS

Trusses require extreme care in fabricating, handling, shipping, installing and bracing. Refer to and follow the latest edition of BCSI (Building Component Safety Information, by TPI and SBCA) for safety practices prior to performing these functions. Installers shall provide temporary bracing per BCSI. Unless noted otherwise, top chord shall have properly attached structural sheathing and bottom chord shall have a properly attached rigid ceiling. Locations shown for permanent lateral restraint of webs shall have bracing installed per BCSI sections B3, B7, or B10, as applicable. Apply plates to each face of truss and position as shown above and on the Joint Details, unless noted otherwise. Refer to drawings 160A-Z for standard plate positions. Refer to job's General Notes page for additional information.

Alpine, a division of ITW Building Components Group Inc. shall not be responsible for any deviation from this drawing, any failure to build the truss in conformance with ANSI/TPI 1, or for handling, shipping, installation and bracing of trusses. A seal on this drawing or cover page listing this drawing, indicates acceptance of professional engineering responsibility solely for the design shown. The suitability and use of this drawing for any structure is the responsibility of the Building Designer per ANSI/TPI 1 Sec.2.

For more information see these web sites: Alpine: alpineitw.com; TPI: tpinst.org; SBCA: sbcindustry.com; ICC: iccsafe.org; AWC: awc.org

ALPINE
AN ITW COMPANY
6750 Forum Drive
Suite 305
Orlando FL, 32821

SEQN: 626703 COMN FROM: CDM	Ply: 1 Qty: 1	**Job Number:** 21-5719 Jones/Freeman **Truss Label:** A02	Cust: R 215 JRef:1X6P2150009 T21 DrwNo: 182.21.1412.39120 / YK 07/01/2021

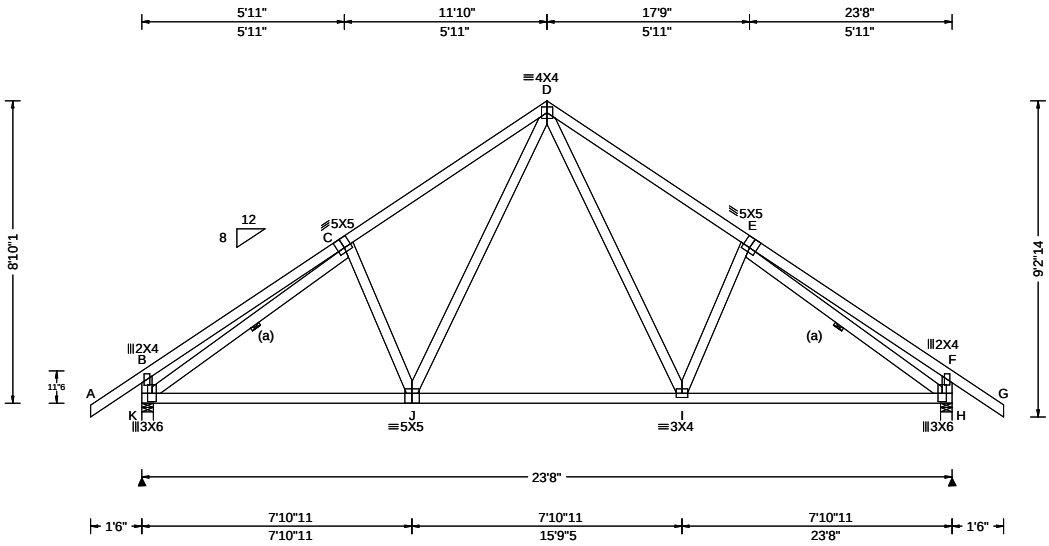

Loading Criteria (psf)

TCLL: 20.00
TCDL: 10.00
BCLL: 0.00
BCDL: 10.00
Des Ld: 40.00
NCBCLL: 10.00
Soffit: 2.00
Load Duration: 1.25
Spacing: 24.0 "

Wind Criteria

Wind Std: ASCE 7-16
Speed: 130 mph
Enclosure: Closed
Risk Category: II
EXP: C Kzt: NA
Mean Height: 15.00 ft
TCDL: 5.0 psf
BCDL: 5.0 psf
MWFRS Parallel Dist: 0 to h/2
C&C Dist a: 3.00 ft
Loc. from endwall: Any
GCpi: 0.18
Wind Duration: 1.60

Snow Criteria (Pg,Pf in PSF)

Pg: NA Ct: NA CAT: NA
Pf: NA Ce: NA
Lu: NA Cs: NA
Snow Duration: NA

Building Code:
FBC 7th Ed. 2020 Res.
TPI Std: 2014
Rep Fac: Yes
FT/RT:20(0)/10(0)
Plate Type(s):
WAVE

Defl/CSI Criteria

PP Deflection in	loc	L/defl	L/#
VERT(LL): 0.043	I	999	240
VERT(CL): 0.082	I	999	180
HORZ(LL): 0.026	F	-	-
HORZ(TL): 0.050	F	-	-

Creep Factor: 2.0
Max TC CSI: 0.382
Max BC CSI: 0.682
Max Web CSI: 0.407

VIEW Ver: 21.01.01A.0521.20

▲ Maximum Reactions (lbs)

Loc	Gravity R+	/ R-	/ Rh	Non-Gravity / Rw	/ U	/ RL
K	1182	/-	/-	/667	/180	/271
H	1182	/-	/-	/667	/180	/-

Wind reactions based on MWFRS
K Brg Width = 4.0 Min Req = 1.5
H Brg Width = 4.0 Min Req = 1.5
Bearings K & H are a rigid surface.
Members not listed have forces less than 375#

Maximum Top Chord Forces Per Ply (lbs)

Chords	Tens.	Comp.	Chords	Tens.	Comp.
C - D	494	- 1321	D - E	494	- 1322

Maximum Bot Chord Forces Per Ply (lbs)

Chords	Tens.	Comp.	Chords	Tens.	Comp.
K - J	1109	- 180	I - H	1110	- 191
J - I	785	- 23			

Maximum Web Forces Per Ply (lbs)

Webs	Tens.	Comp.	Webs	Tens.	Comp.
K - C	227	- 1293	D - I	535	- 181
J - D	533	- 182	E - H	226	- 1296

Lumber

Top chord: 2x4 SP #2;
Bot chord: 2x4 SP #2;
Webs: 2x4 SP #3;

Bracing

(a) Continuous lateral restraint equally spaced on member.

Loading

Truss passed check for 20 psf additional bottom chord live load in areas with 42"-high x 24"-wide clearance.

Wind

Wind loads based on MWFRS with additional C&C member design.

End verticals not exposed to wind pressure.

Wind loading based on both gable and hip roof types.

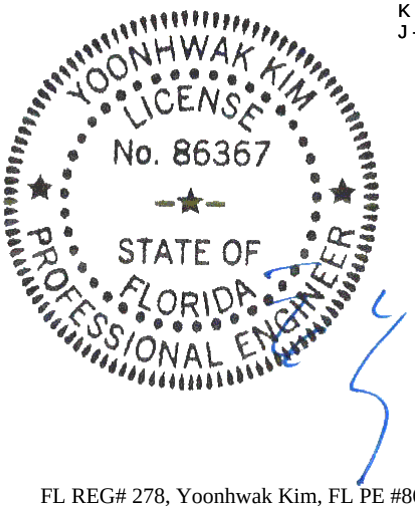

FL REG# 278, Yoonhwak Kim, FL PE #86367
07/01/2021

****WARNING**** READ AND FOLLOW ALL NOTES ON THIS DRAWING!
****IMPORTANT**** FURNISH THIS DRAWING TO ALL CONTRACTORS INCLUDING THE INSTALLERS

Trusses require extreme care in fabricating, handling, shipping, installing and bracing. Refer to and follow the latest edition of BCSI (Building Component Safety Information, by TPI and SBCA) for safety practices prior to performing these functions. Installers shall provide temporary bracing per BCSI. Unless noted otherwise, top chord shall have properly attached structural sheathing and bottom chord shall have a properly attached rigid ceiling. Locations shown for permanent lateral restraint of webs shall have bracing installed per BCSI sections B3, B7, or B10, as applicable. Apply plates to each face of truss and position as shown above and on the Joint Details, unless noted otherwise. Refer to drawings 160A-Z for standard plate positions. Refer to job's General Notes page for additional information.

Alpine, a division of ITW Building Components Group Inc. shall not be responsible for any deviation from this drawing, any failure to build the truss in conformance with ANSI/TPI 1, or for handling, shipping, installation and bracing of trusses. A seal on this drawing or cover page listing this drawing, indicates acceptance of professional engineering responsibility solely for the design shown. The suitability and use of this drawing for any structure is the responsibility of the Building Designer per ANSI/TPI 1 Sec.2.

For more information see these web sites: Alpine: alpineitw.com; TPI: tpinst.org; SBCA: sbcindustry.com; ICC: iccsafe.org; AWC: awc.org

ALPINE AN ITW COMPANY
6750 Forum Drive
Suite 305
Orlando FL, 32821

SEQN: 626697 COMN FROM: CDM	Ply: 1 Qty: 6	**Job Number:** 21-5719 Jones/Freeman **Truss Label:** A03	Cust: R 215 JRef:1X6P2150009 T11 DrwNo: 182.21.1412.40480 / YK 07/01/2021

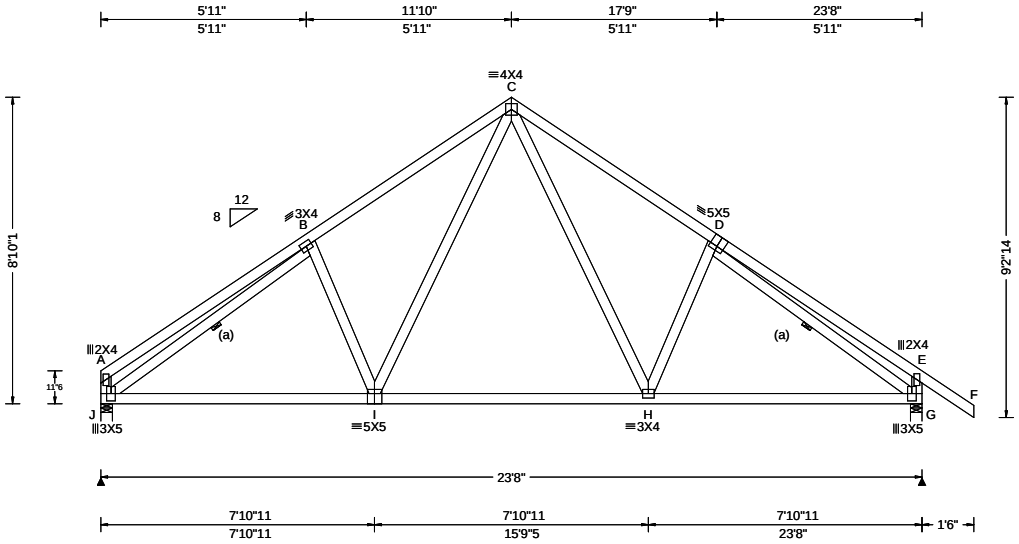

Loading Criteria (psf)

TCLL: 20.00
TCDL: 10.00
BCLL: 0.00
BCDL: 10.00
Des Ld: 40.00
NCBCLL: 10.00
Soffit: 2.00
Load Duration: 1.25
Spacing: 24.0 "

Wind Criteria

Wind Std: ASCE 7-16
Speed: 130 mph
Enclosure: Closed
Risk Category: II
EXP: C Kzt: NA
Mean Height: 15.00 ft
TCDL: 5.0 psf
BCDL: 5.0 psf
MWFRS Parallel Dist: 0 to h/2
C&C Dist a: 3.00 ft
Loc. from endwall: not in 4.50 ft
GCpi: 0.18
Wind Duration: 1.60

Snow Criteria (Pg,Pf in PSF)

Pg: NA Ct: NA CAT: NA
Pf: NA Ce: NA
Lu: NA Cs: NA
Snow Duration: NA

Building Code:
FBC 7th Ed. 2020 Res.
TPI Std: 2014
Rep Fac: Yes
FT/RT:20(0)/10(0)
Plate Type(s):
WAVE

Defl/CSI Criteria

PP Deflection in	loc	L/defl	L/#
VERT(LL): 0.043	I	999	240
VERT(CL): 0.083	I	999	180
HORZ(LL): 0.026	E	-	-
HORZ(TL): 0.051	E	-	-

Creep Factor: 2.0
Max TC CSI: 0.426
Max BC CSI: 0.683
Max Web CSI: 0.409

VIEW Ver: 21.01.01A.0521.20

▲ Maximum Reactions (lbs)

Loc	Gravity R+	/ R-	/ Rh	Non-Gravity / Rw	/ U	/ RL
J	1075	/-	/-	/578	/155	/252
G	1185	/-	/-	/668	/181	/-

Wind reactions based on MWFRS
J Brg Width = 4.0 Min Req = 1.5
G Brg Width = 4.0 Min Req = 1.5
Bearings J & G are a rigid surface.
Members not listed have forces less than 375#

Maximum Top Chord Forces Per Ply (lbs)

Chords	Tens.	Comp.	Chords	Tens.	Comp.
B - C	346	- 1337	C - D	342	- 1328

Maximum Bot Chord Forces Per Ply (lbs)

Chords	Tens.	Comp.	Chords	Tens.	Comp.
J - I	1127	- 122	H - G	1114	- 102
I - H	789	- 23			

Maximum Web Forces Per Ply (lbs)

Webs	Tens.	Comp.	Webs	Tens.	Comp.
J - B	159	- 1289	C - H	536	- 118
I - C	549	- 124	D - G	123	- 1302

Lumber

Top chord: 2x4 SP #2;
Bot chord: 2x4 SP #2;
Webs: 2x4 SP #3;

Bracing

(a) Continuous lateral restraint equally spaced on member.

Loading

Truss passed check for 20 psf additional bottom chord live load in areas with 42"-high x 24"-wide clearance.

Wind

Wind loads based on MWFRS with additional C&C member design.

End verticals not exposed to wind pressure.

Wind loading based on both gable and hip roof types.

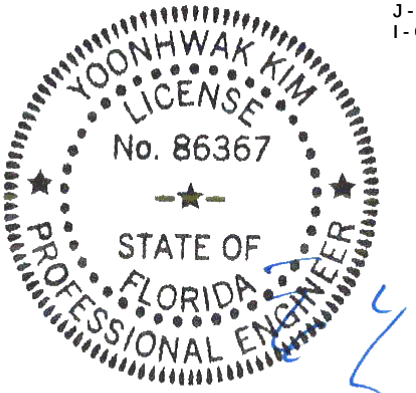

FL REG# 278, Yoonhwak Kim, FL PE #86367
07/01/2021

****WARNING**** READ AND FOLLOW ALL NOTES ON THIS DRAWING!
****IMPORTANT**** FURNISH THIS DRAWING TO ALL CONTRACTORS INCLUDING THE INSTALLERS

Trusses require extreme care in fabricating, handling, shipping, installing and bracing. Refer to and follow the latest edition of BCSI (Building Component Safety Information, by TPI and SBCA) for safety practices prior to performing these functions. Installers shall provide temporary bracing per BCSI. Unless noted otherwise, top chord shall have properly attached structural sheathing and bottom chord shall have a properly attached rigid ceiling. Locations shown for permanent lateral restraint of webs shall have bracing installed per BCSI sections B3, B7, or B10, as applicable. Apply plates to each face of truss and position as shown above and on the Joint Details, unless noted otherwise. Refer to drawings 160A-Z for standard plate positions. Refer to job's General Notes page for additional information.

Alpine, a division of ITW Building Components Group Inc. shall not be responsible for any deviation from this drawing, any failure to build the truss in conformance with ANSI/TPI 1, or for handling, shipping, installation and bracing of trusses. A seal on this drawing or cover page listing this drawing, indicates acceptance of professional engineering responsibility solely for the design shown. The suitability and use of this drawing for any structure is the responsibility of the Building Designer per ANSI/TPI 1 Sec.2.

For more information see these web sites: Alpine: alpineitw.com; TPI: tpinst.org; SBCA: sbcindustry.com; ICC: iccsafe.org; AWC: awc.org

ALPINE
AN ITW COMPANY
6750 Forum Drive
Suite 305
Orlando FL, 32821

SEQN: 626710 HIPM FROM: CDM	Ply: 1 Qty: 1	**Job Number:** 21-5719 Jones/Freeman **Truss Label:** A04	Cust: R 215 JRef:1X6P2150009 T41 DrwNo: 182.21.1412.41733 / YK 07/01/2021

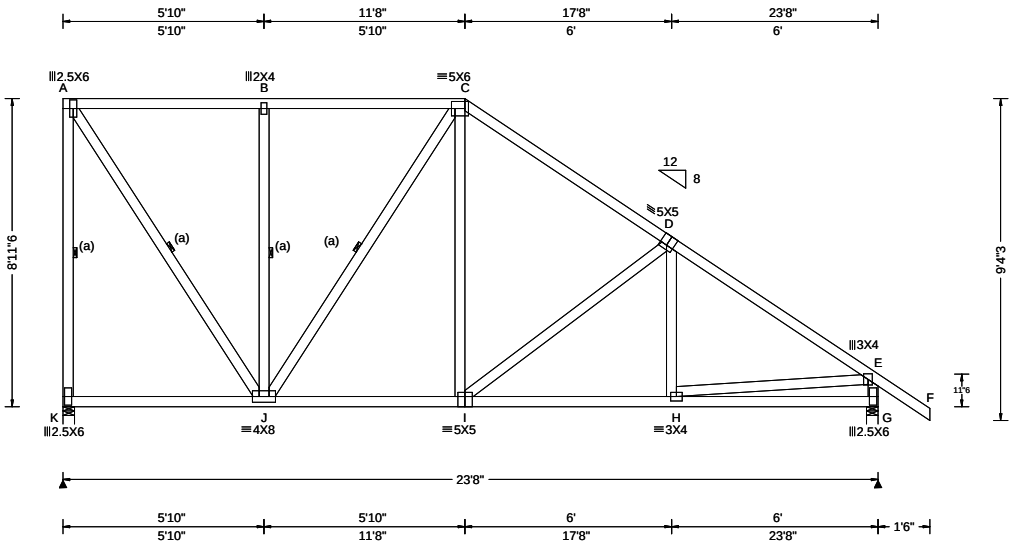

Loading Criteria (psf)

TCLL:	20.00
TCDL:	10.00
BCLL:	0.00
BCDL:	10.00
Des Ld:	40.00
NCBCLL:	10.00
Soffit:	2.00

Load Duration: 1.25
Spacing: 24.0 "

Wind Criteria
Wind Std: ASCE 7-16
Speed: 130 mph
Enclosure: Closed
Risk Category: II
EXP: C Kzt: NA
Mean Height: 15.00 ft
TCDL: 5.0 psf
BCDL: 5.0 psf
MWFRS Parallel Dist: h to 2h
C&C Dist a: 3.00 ft
Loc. from endwall: not in 9.00 ft
GCpi: 0.18
Wind Duration: 1.60

Snow Criteria (Pg,Pf in PSF)
Pg: NA Ct: NA CAT: NA
Pf: NA Ce: NA
Lu: NA Cs: NA
Snow Duration: NA

Building Code:
FBC 7th Ed. 2020 Res.
TPI Std: 2014
Rep Fac: Yes
FT/RT:20(0)/10(0)
Plate Type(s):
WAVE

Defl/CSI Criteria

PP Deflection in	loc	L/defl	L/#
VERT(LL): 0.040	I	999	240
VERT(CL): 0.074	I	999	180
HORZ(LL): 0.012	E	-	-
HORZ(TL): 0.022	E	-	-

Creep Factor: 2.0
Max TC CSI: 0.558
Max BC CSI: 0.449
Max Web CSI: 0.430

VIEW Ver: 21.01.01A.0521.20

▲ Maximum Reactions (lbs)

	Gravity			Non-Gravity		
Loc	R+	/ R-	/ Rh	/ Rw	/ U	/ RL
K	1170	/-	/-	/563	/187	/225
G	1159	/-	/-	/715	/47	/-

Wind reactions based on MWFRS
K Brg Width = 4.0 Min Req = 1.5
G Brg Width = 4.0 Min Req = 1.5
Bearings K & G are a rigid surface.
Members not listed have forces less than 375#

Maximum Top Chord Forces Per Ply (lbs)

Chords	Tens.	Comp.	Chords	Tens.	Comp.
A - B	310	- 611	C - D	377	- 1056
B - C	311	- 611	D - E	338	- 1394

Maximum Bot Chord Forces Per Ply (lbs)

Chords	Tens.	Comp.	Chords	Tens.	Comp.
J - I	785	- 65	I - H	1078	- 156

Maximum Web Forces Per Ply (lbs)

Webs	Tens.	Comp.	Webs	Tens.	Comp.
A - K	605	- 1054	C - I	429	- 45
A - J	1092	- 555	H - E	1014	- 131
B - J	445	- 425	E - G	328	- 1107

Lumber

Top chord: 2x4 SP #2;
Bot chord: 2x4 SP #2;
Webs: 2x4 SP #3;

Bracing

(a) Continuous lateral restraint equally spaced on member.

Loading

Truss passed check for 20 psf additional bottom chord live load in areas with 42"-high x 24"-wide clearance.

Wind

Wind loads based on MWFRS with additional C&C member design.

End verticals not exposed to wind pressure.

Wind loading based on both gable and hip roof types.

YOONHWAK KIM
LICENSE
No. 86367
STATE OF
FLORIDA
PROFESSIONAL ENGINEER

FL REG# 278, Yoonhwak Kim, FL PE #86367
07/01/2021

****WARNING**** READ AND FOLLOW ALL NOTES ON THIS DRAWING!
****IMPORTANT**** FURNISH THIS DRAWING TO ALL CONTRACTORS INCLUDING THE INSTALLERS

Trusses require extreme care in fabricating, handling, shipping, installing and bracing. Refer to and follow the latest edition of BCSI (Building Component Safety Information, by TPI and SBCA) for safety practices prior to performing these functions. Installers shall provide temporary bracing per BCSI. Unless noted otherwise, top chord shall have properly attached structural sheathing and bottom chord shall have a properly attached rigid ceiling. Locations shown for permanent lateral restraint of webs shall have bracing installed per BCSI sections B3, B7, or B10, as applicable. Apply plates to each face of truss and position as shown above and on the Joint Details, unless noted otherwise. Refer to drawings 160A-Z for standard plate positions. Refer to job's General Notes page for additional information.

Alpine, a division of ITW Building Components Group Inc. shall not be responsible for any deviation from this drawing, any failure to build the truss in conformance with ANSI/TPI 1, or for handling, shipping, installation and bracing of trusses. A seal on this drawing or cover page listing this drawing, indicates acceptance of professional engineering responsibility solely for the design shown. The suitability and use of this drawing for any structure is the responsibility of the Building Designer per ANSI/TPI 1 Sec.2.

For more information see these web sites: Alpine: alpineitw.com; TPI: tpinst.org; SBCA: sbcindustry.com; ICC: iccsafe.org; AWC: awc.org

ALPINE
AN ITW COMPANY
6750 Forum Drive
Suite 305
Orlando FL, 32821

SEQN: 626713 HIPM FROM: CDM	Ply: 1 Qty: 1	**Job Number:** 21-5719 Jones/Freeman **Truss Label:** A05	Cust: R 215 JRef:1X6P2150009 T16 DrwNo: 182.21.1412.43153 / YK 07/01/2021

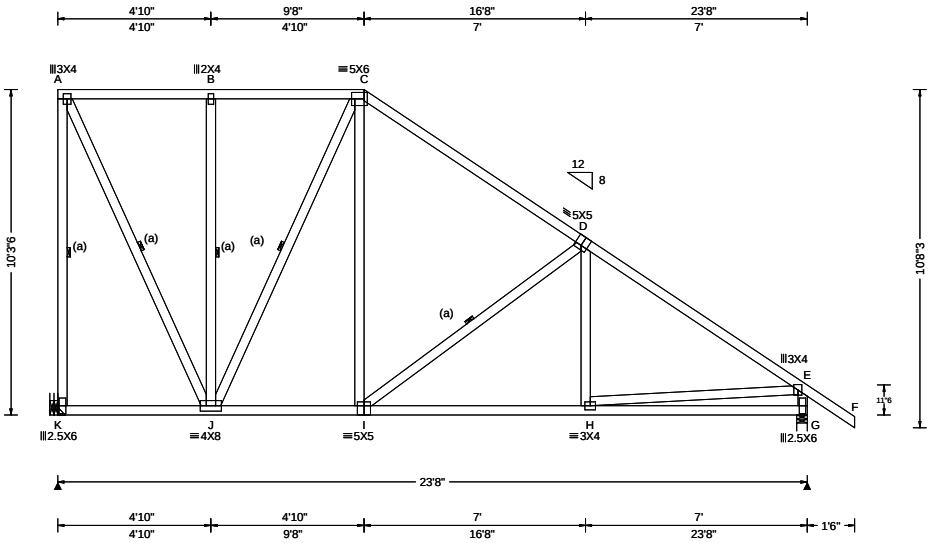

Loading Criteria (psf)

TCLL: 20.00
TCDL: 10.00
BCLL: 0.00
BCDL: 10.00
Des Ld: 40.00
NCBCLL: 10.00
Soffit: 2.00
Load Duration: 1.25
Spacing: 24.0 "

Wind Criteria

Wind Std: ASCE 7-16
Speed: 130 mph
Enclosure: Closed
Risk Category: II
EXP: C Kzt: NA
Mean Height: 15.21 ft
TCDL: 5.0 psf
BCDL: 5.0 psf
MWFRS Parallel Dist: h to 2h
C&C Dist a: 3.00 ft
Loc. from endwall: not in 9.00 ft
GCpi: 0.18
Wind Duration: 1.60

Snow Criteria (Pg,Pf in PSF)

Pg: NA Ct: NA CAT: NA
Pf: NA Ce: NA
Lu: NA Cs: NA
Snow Duration: NA

Building Code:
FBC 7th Ed. 2020 Res.
TPI Std: 2014
Rep Fac: Yes
FT/RT:20(0)/10(0)
Plate Type(s):
WAVE

Defl/CSI Criteria

PP Deflection in	loc	L/defl	L/#
VERT(LL): 0.040	I	999	240
VERT(CL): 0.075	I	999	180
HORZ(LL): 0.012	E	-	-
HORZ(TL): 0.022	E	-	-

Creep Factor: 2.0
Max TC CSI: 0.618
Max BC CSI: 0.550
Max Web CSI: 0.556

VIEW Ver: 21.01.01A.0521.20

▲ Maximum Reactions (lbs)

Loc	Gravity R+	Gravity / R-	Gravity / Rh	Non-Gravity / Rw	Non-Gravity / U	Non-Gravity / RL
K	1160	/-	/-	/592	/191	/260
G	1144	/-	/-	/724	/24	/-

Wind reactions based on MWFRS
K Brg Width = - Min Req = -
G Brg Width = 4.0 Min Req = 1.5
Bearing G is a rigid surface.
Members not listed have forces less than 375#

Maximum Top Chord Forces Per Ply (lbs)

Chords	Tens.	Comp.	Chords	Tens.	Comp.
A - B	223	- 453	C - D	285	- 919
B - C	223	- 453	D - E	255	- 1366

Maximum Bot Chord Forces Per Ply (lbs)

Chords	Tens.	Comp.	Chords	Tens.	Comp.
K - J	402	- 178	I - H	1041	- 82
J - I	652	0			

Maximum Web Forces Per Ply (lbs)

Webs	Tens.	Comp.	Webs	Tens.	Comp.
A - K	587	- 1062	I - D	208	- 491
A - J	1039	- 512	H - E	945	- 46
J - C	172	- 457	E - G	279	- 1086
C - I	484	- 70			

Lumber

Top chord: 2x4 SP #2;
Bot chord: 2x4 SP #2;
Webs: 2x4 SP #3;

Bracing

(a) Continuous lateral restraint equally spaced on member.

Hangers / Ties

Simpson Construction Hardware is specified based on the most current information provided by Simpson Strong-Tie. Please refer to the most recent Simpson Strong-Tie catalog for additional information.

Recommended hanger connections are based on manufacturer tested capacities and calculations. Conditions may exist that require different connections than indicated. Refer to manufacturer publication for additional information.

Hanger specified assumes connection to supporting chord is located a minimum of five times the depth of the supporting chord from any unsupported end, unless unsupported chord end has 85% plating coverage.

Bearing at location x=0' uses the following support conditions: 0'
Bearing K (0', 10'1"2) LUS26
Supporting Member: (2)2x6 SP 2400f-2.0E
(4) 0.148"x3" nails into supporting member,
(4) 0.148"x3" nails into supported member.

Loading

Truss passed check for 20 psf additional bottom chord live load in areas with 42"-high x 24"-wide clearance.

Wind

Wind loads based on MWFRS with additional C&C member design.

End verticals not exposed to wind pressure.

Wind loading based on both gable and hip roof types.

YOONHWAK KIM
LICENSE
No. 86367
STATE OF FLORIDA
PROFESSIONAL ENGINEER

FL REG# 278, Yoonhwak Kim, FL PE #86367
07/01/2021

****WARNING**** READ AND FOLLOW ALL NOTES ON THIS DRAWING!
****IMPORTANT**** FURNISH THIS DRAWING TO ALL CONTRACTORS INCLUDING THE INSTALLERS

Trusses require extreme care in fabricating, handling, shipping, installing and bracing. Refer to and follow the latest edition of BCSI (Building Component Safety Information, by TPI and SBCA) for safety practices prior to performing these functions. Installers shall provide temporary bracing per BCSI. Unless noted otherwise, top chord shall have properly attached structural sheathing and bottom chord shall have a properly attached rigid ceiling. Locations shown for permanent lateral restraint of webs shall have bracing installed per BCSI sections B3, B7, or B10, as applicable. Apply plates to each face of truss and position as shown above and on the Joint Details, unless noted otherwise. Refer to drawings 160A-Z for standard plate positions. Refer to job's General Notes page for additional information.

Alpine, a division of ITW Building Components Group Inc. shall not be responsible for any deviation from this drawing, any failure to build the truss in conformance with ANSI/TPI 1, or for handling, shipping, installation and bracing of trusses. A seal on this drawing or cover page listing this drawing, indicates acceptance of professional engineering responsibility solely for the design shown. The suitability and use of this drawing for any structure is the responsibility of the Building Designer per ANSI/TPI 1 Sec.2.

For more information see these web sites: Alpine: alpineitw.com; TPI: tpinst.org; SBCA: sbcindustry.com; ICC: iccsafe.org; AWC: awc.org

ALPINE AN ITW COMPANY
6750 Forum Drive
Suite 305
Orlando FL, 32821

SEQN: 626734 HIPM FROM: CDM	Ply: 1 Qty: 2	**Job Number:** 21-5719 Jones/Freeman **Truss Label:** A06	Cust: R 215 JRef:1X6P2150009 T36 DrwNo: 182.21.1412.44603 / YK 07/01/2021

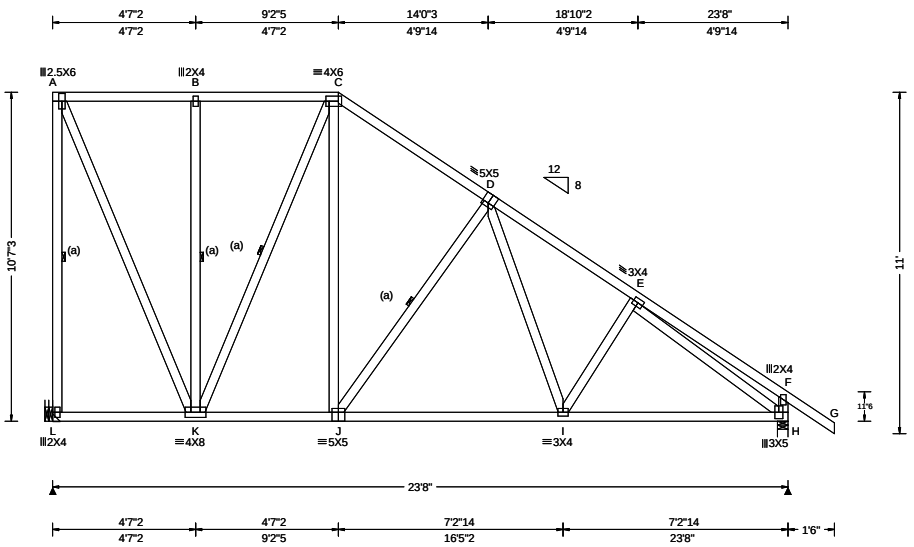

Loading Criteria (psf)

TCLL: 20.00
TCDL: 10.00
BCLL: 0.00
BCDL: 10.00
Des Ld: 40.00
NCBCLL: 10.00
Soffit: 2.00
Load Duration: 1.25
Spacing: 24.0 "

Wind Criteria

Wind Std: ASCE 7-16
Speed: 130 mph
Enclosure: Closed
Risk Category: II
EXP: C Kzt: NA
Mean Height: 15.87 ft
TCDL: 5.0 psf
BCDL: 5.0 psf
MWFRS Parallel Dist: h to 2h
C&C Dist a: 3.00 ft
Loc. from endwall: not in 9.00 ft
GCpi: 0.18
Wind Duration: 1.60

Snow Criteria (Pg,Pf in PSF)

Pg: NA Ct: NA CAT: NA
Pf: NA Ce: NA
Lu: NA Cs: NA
Snow Duration: NA

Building Code:
FBC 7th Ed. 2020 Res.
TPI Std: 2014
Rep Fac: Yes
FT/RT:20(0)/10(0)
Plate Type(s):
WAVE

Defl/CSI Criteria

PP Deflection in	loc	L/defl	L/#
VERT(LL): 0.048	D	999	240
VERT(CL): 0.087	D	999	180
HORZ(LL): 0.021	F	-	-
HORZ(TL): 0.038	F	-	-

Creep Factor: 2.0
Max TC CSI: 0.317
Max BC CSI: 0.592
Max Web CSI: 0.983

VIEW Ver: 21.01.01A.0521.20

▲ Maximum Reactions (lbs)

	Gravity			Non-Gravity		
Loc	R+	/ R-	/ Rh	/ Rw	/ U	/ RL
L	1210	/-	/-	/596	/-	/270
H	1212	/-	/-	/726	/-	/-

Wind reactions based on MWFRS
L Brg Width = - Min Req = -
H Brg Width = 4.0 Min Req = 1.5
Bearing H is a rigid surface.
Members not listed have forces less than 375#

Maximum Top Chord Forces Per Ply (lbs)

Chords	Tens.	Comp.	Chords	Tens.	Comp.
A - B	15	- 444	C - D	48	- 894
B - C	15	- 444	D - E	75	- 1372

Maximum Bot Chord Forces Per Ply (lbs)

Chords	Tens.	Comp.	Chords	Tens.	Comp.
L - K	417	- 183	J - I	953	0
K - J	668	0	I - H	1146	0

Maximum Web Forces Per Ply (lbs)

Webs	Tens.	Comp.	Webs	Tens.	Comp.
A - L	18	- 1113	C - J	657	- 124
A - K	1089	- 37	J - D	222	- 497
K - C	163	- 551	E - H	0	- 1389

Lumber

Top chord: 2x4 SP #2;
Bot chord: 2x4 SP #2;
Webs: 2x4 SP #3;

Bracing

(a) Continuous lateral restraint equally spaced on member.

Hangers / Ties

Simpson Construction Hardware is specified based on the most current information provided by Simpson Strong-Tie. Please refer to the most recent Simpson Strong-Tie catalog for additional information.

Recommended hanger connections are based on manufacturer tested capacities and calculations. Conditions may exist that require different connections than indicated. Refer to manufacturer publication for additional information.

Hanger specified assumes connection to supporting chord is located a minimum of five times the depth of the supporting chord from any unsupported end, unless unsupported chord end has 85% plating coverage.

Bearing at location x=0' uses the following support conditions: 0'
Bearing L (0', 10'1"2) HUS26
Supporting Member: (2)2x6 SP 2400f-2.0E
(14) 0.148"x3" nails into supporting member,
(4) 0.148"x3" nails into supported member.

Loading

Truss passed check for 20 psf additional bottom chord live load in areas with 42"-high x 24"-wide clearance.

Wind

Wind loads based on MWFRS with additional C&C member design.

End verticals not exposed to wind pressure.

Wind loading based on both gable and hip roof types.

Additional Notes

Refer to DWG PB160160118 for piggyback details.

YOONHWAK KIM LICENSE No. 86367 STATE OF FLORIDA PROFESSIONAL ENGINEER

FL REG# 278, Yoonhwak Kim, FL PE #86367
07/01/2021

****WARNING**** READ AND FOLLOW ALL NOTES ON THIS DRAWING!
****IMPORTANT**** FURNISH THIS DRAWING TO ALL CONTRACTORS INCLUDING THE INSTALLERS

Trusses require extreme care in fabricating, handling, shipping, installing and bracing. Refer to and follow the latest edition of BCSI (Building Component Safety Information, by TPI and SBCA) for safety practices prior to performing these functions. Installers shall provide temporary bracing per BCSI. Unless noted otherwise, top chord shall have properly attached structural sheathing and bottom chord shall have a properly attached rigid ceiling. Locations shown for permanent lateral restraint of webs shall have bracing installed per BCSI sections B3, B7, or B10, as applicable. Apply plates to each face of truss and position as shown above and on the Joint Details, unless noted otherwise. Refer to drawings 160A-Z for standard plate positions. Refer to job's General Notes page for additional information.

Alpine, a division of ITW Building Components Group Inc. shall not be responsible for any deviation from this drawing, any failure to build the truss in conformance with ANSI/TPI 1, or for handling, shipping, installation and bracing of trusses. A seal on this drawing or cover page listing this drawing, indicates acceptance of professional engineering responsibility solely for the design shown. The suitability and use of this drawing for any structure is the responsibility of the Building Designer per ANSI/TPI 1 Sec.2.

For more information see these web sites: Alpine: alpineitw.com; TPI: tpinst.org; SBCA: sbcindustry.com; ICC: iccsafe.org; AWC: awc.org

ALPINE AN ITW COMPANY
6750 Forum Drive
Suite 305
Orlando FL, 32821

SEQN: 626738 SPEC FROM: CDM	Ply: 1 Qty: 1	**Job Number:** 21-5719 Jones/Freeman **Truss Label:** A07	Cust: R 215 JRef:1X6P2150009 T9 DrwNo: 182.21.1412.47723 / YK 07/01/2021

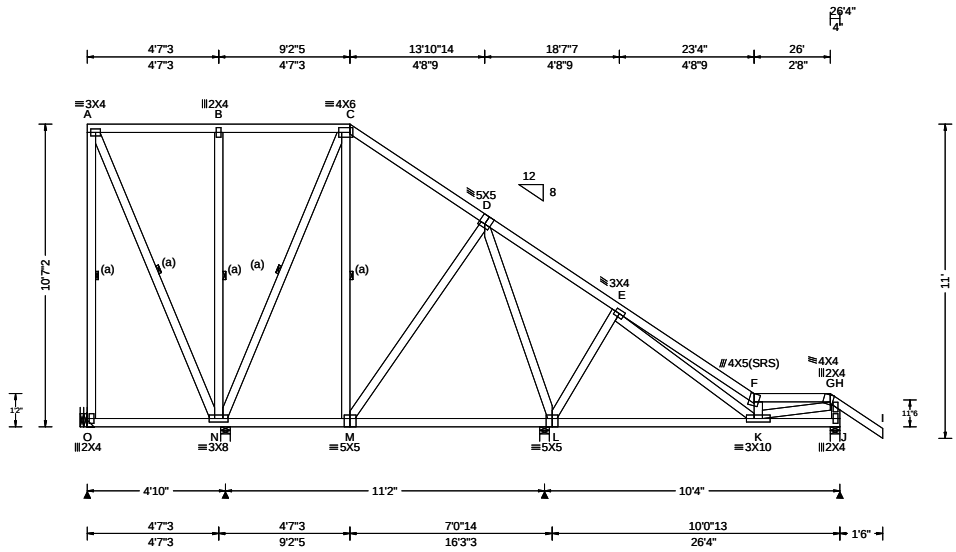

Loading Criteria (psf)	**Wind Criteria**	**Snow Criteria** (Pg,Pf in PSF)	**Defl/CSI Criteria**
TCLL: 20.00 TCDL: 10.00 BCLL: 0.00 BCDL: 10.00 Des Ld: 40.00 NCBCLL: 10.00 Soffit: 2.00 Load Duration: 1.25 Spacing: 24.0 "	Wind Std: ASCE 7-16 Speed: 130 mph Enclosure: Closed Risk Category: II EXP: C Kzt: NA Mean Height: 17.21 ft TCDL: 5.0 psf BCDL: 5.0 psf MWFRS Parallel Dist: h to 2h C&C Dist a: 3.00 ft Loc. from endwall: not in 9.00 ft GCpi: 0.18 Wind Duration: 1.60	Pg: NA Ct: NA CAT: NA Pf: NA Ce: NA Lu: NA Cs: NA Snow Duration: NA Building Code: FBC 7th Ed. 2020 Res. TPI Std: 2014 Rep Fac: Yes FT/RT:20(0)/10(0) Plate Type(s): WAVE	PP Deflection in loc L/defl L/# VERT(LL): 0.041 F 999 240 VERT(CL): 0.076 F 999 180 HORZ(LL): 0.011 B - - HORZ(TL): 0.021 C - - Creep Factor: 2.0 Max TC CSI: 0.340 Max BC CSI: 0.619 Max Web CSI: 0.887 VIEW Ver: 21.01.01A.0521.20

▲ Maximum Reactions (lbs)

	Gravity			Non-Gravity		
Loc	R+	/ R-	/ Rh	/ Rw	/ U	/ RL
O	314	/-	/-	/71	/-	/274
N	717	/-	/-	/383	/-	/-
L	1341	/-	/-	/751	/-	/-
J	367	/-	/-	/243	/46	/-

Wind reactions based on MWFRS

O	Brg Width = -	Min Req = -
N	Brg Width = 4.0	Min Req = 1.5
L	Brg Width = 4.0	Min Req = 1.6
J	Brg Width = 4.0	Min Req = 1.5

Bearings N, L, & J are a rigid surface.

Members not listed have forces less than 375#

Maximum Top Chord Forces Per Ply (lbs)

Chords	Tens.	Comp.	Chords	Tens.	Comp.
D - E	454	- 92	F - G	34	- 458
E - F	164	- 735			

Maximum Bot Chord Forces Per Ply (lbs)

Chords	Tens.	Comp.	Chords	Tens.	Comp.
O - N	399	- 183	M - L	534	- 298
N - M	703	- 260			

Maximum Web Forces Per Ply (lbs)

Webs	Tens.	Comp.	Webs	Tens.	Comp.
D - L	45	- 813	F - K	228	- 592
E - K	870	- 264	K - G	469	0

Lumber

Top chord: 2x4 SP #2;
Bot chord: 2x4 SP #2;
Webs: 2x4 SP #3;

Bracing

(a) Continuous lateral restraint equally spaced on member.

Hangers / Ties

Simpson Construction Hardware is specified based on the most current information provided by Simpson Strong-Tie. Please refer to the most recent Simpson Strong-Tie catalog for additional information.

Recommended hanger connections are based on manufacturer tested capacities and calculations. Conditions may exist that require different connections than indicated. Refer to manufacturer publication for additional information.

Hanger specified assumes connection to supporting chord is located a minimum of five times the depth of the supporting chord from any unsupported end, unless unsupported chord end has 85% plating coverage.

Bearing at location x=0' uses the following support conditions: 0'
Bearing O (0', 10'1"2) LUS26
Supporting Member: (2)2x6 SP 2400f-2.0E
(4) 0.148"x3" nails into supporting member,
(3) 0.148"x3" nails into supported member.

Loading

Truss passed check for 20 psf additional bottom chord live load in areas with 42"-high x 24"-wide clearance.

Wind

Wind loads based on MWFRS with additional C&C member design.

End verticals not exposed to wind pressure.

Wind loading based on both gable and hip roof types.

Additional Notes

Refer to DWG PB160160118 for piggyback details.

YOONHWAK KIM
LICENSE
No. 86367
STATE OF FLORIDA
PROFESSIONAL ENGINEER

FL REG# 278, Yoonhwak Kim, FL PE #86367
07/01/2021

****WARNING**** READ AND FOLLOW ALL NOTES ON THIS DRAWING!
****IMPORTANT**** FURNISH THIS DRAWING TO ALL CONTRACTORS INCLUDING THE INSTALLERS

Trusses require extreme care in fabricating, handling, shipping, installing and bracing. Refer to and follow the latest edition of BCSI (Building Component Safety Information, by TPI and SBCA) for safety practices prior to performing these functions. Installers shall provide temporary bracing per BCSI. Unless noted otherwise, top chord shall have properly attached structural sheathing and bottom chord shall have a properly attached rigid ceiling. Locations shown for permanent lateral restraint of webs shall have bracing installed per BCSI sections B3, B7, or B10, as applicable. Apply plates to each face of truss and position as shown above and on the Joint Details, unless noted otherwise. Refer to drawings 160A-Z for standard plate positions. Refer to job's General Notes page for additional information.

Alpine, a division of ITW Building Components Group Inc. shall not be responsible for any deviation from this drawing, any failure to build the truss in conformance with ANSI/TPI 1, or for handling, shipping, installation and bracing of trusses. A seal on this drawing or cover page listing this drawing, indicates acceptance of professional engineering responsibility solely for the design shown. The suitability and use of this drawing for any structure is the responsibility of the Building Designer per ANSI/TPI 1 Sec.2.

For more information see these web sites: Alpine: alpineitw.com; TPI: tpinst.org; SBCA: sbcindustry.com; ICC: iccsafe.org; AWC: awc.org

ALPINE
AN ITW COMPANY
6750 Forum Drive
Suite 305
Orlando FL, 32821

SEQN: 626741 SPEC FROM: CDM	Ply: 1 Qty: 1	**Job Number:** 21-5719 Jones/Freeman **Truss Label:** A08	Cust: R 215 JRef:1X6P2150009 T20 DrwNo: 182.21.1412.50813 / YK 07/01/2021

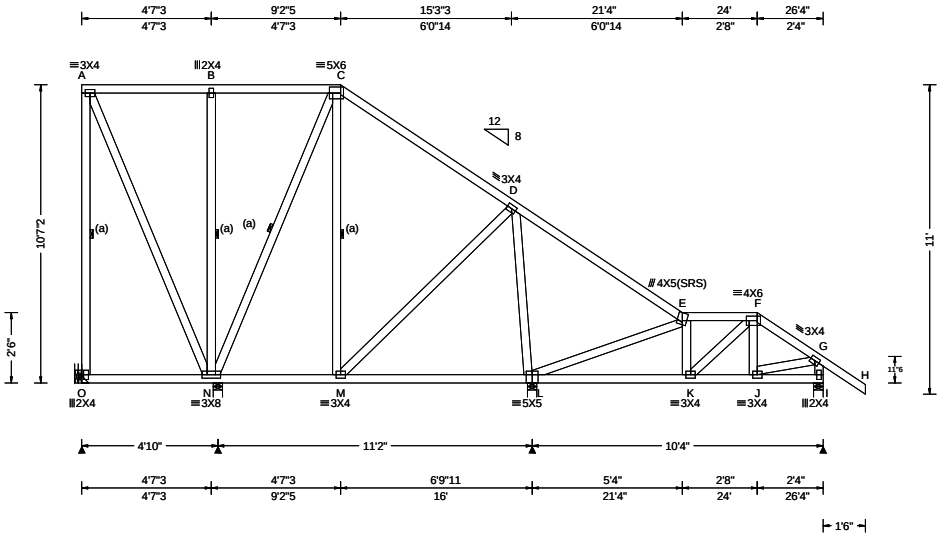

Loading Criteria (psf)

TCLL: 20.00
TCDL: 10.00
BCLL: 0.00
BCDL: 10.00
Des Ld: 40.00
NCBCLL: 10.00
Soffit: 2.00
Load Duration: 1.25
Spacing: 24.0 "

Wind Criteria

Wind Std: ASCE 7-16
Speed: 130 mph
Enclosure: Closed
Risk Category: II
EXP: C Kzt: NA
Mean Height: 16.72 ft
TCDL: 5.0 psf
BCDL: 5.0 psf
MWFRS Parallel Dist: h to 2h
C&C Dist a: 3.00 ft
Loc. from endwall: not in 9.00 ft
GCpi: 0.18
Wind Duration: 1.60

Snow Criteria (Pg,Pf in PSF)

Pg: NA Ct: NA CAT: NA
Pf: NA Ce: NA
Lu: NA Cs: NA
Snow Duration: NA

Building Code:
FBC 7th Ed. 2020 Res.
TPI Std: 2014
Rep Fac: Yes
FT/RT:20(0)/10(0)
Plate Type(s):
WAVE

Defl/CSI Criteria

PP Deflection in	loc	L/defl	L/#
VERT(LL): 0.008	B	999	240
VERT(CL): 0.015	B	999	180
HORZ(LL): 0.004	D	-	-
HORZ(TL): 0.005	D	-	-

Creep Factor: 2.0
Max TC CSI: 0.505
Max BC CSI: 0.341
Max Web CSI: 0.626

VIEW Ver: 21.01.01A.0521.20

▲ Maximum Reactions (lbs)

Loc	Gravity R+	/ R-	/ Rh	Non-Gravity / Rw	/ U	/ RL
O	405	/-	/-	/183	/-	/272
N	555	/-	/-	/254	/-	/-
L	1238	/-	/-	/712	/-	/-
I	451	/-	/-	/293	/24	/-

Wind reactions based on MWFRS
O Brg Width = - Min Req = -
N Brg Width = 4.0 Min Req = 1.5
L Brg Width = 4.0 Min Req = 1.5
I Brg Width = 4.0 Min Req = 1.5
Bearings N, L, & I are a rigid surface.
Members not listed have forces less than 375#

Maximum Bot Chord Forces Per Ply (lbs)

Chords	Tens.	Comp.	Chords	Tens.	Comp.
O - N	420	- 183	N - M	705	- 200

Maximum Web Forces Per Ply (lbs)

Webs	Tens.	Comp.	Webs	Tens.	Comp.
D - L	109	- 832	G - I	170	- 430
L - E	247	- 510			

Lumber

Top chord: 2x4 SP #2;
Bot chord: 2x4 SP #2;
Webs: 2x4 SP #3;

Bracing

(a) Continuous lateral restraint equally spaced on member.

Hangers / Ties

Simpson Construction Hardware is specified based on the most current information provided by Simpson Strong-Tie. Please refer to the most recent Simpson Strong-Tie catalog for additional information.

Recommended hanger connections are based on manufacturer tested capacities and calculations. Conditions may exist that require different connections than indicated. Refer to manufacturer publication for additional information.

Hanger specified assumes connection to supporting chord is located a minimum of five times the depth of the supporting chord from any unsupported end, unless unsupported chord end has 85% plating coverage.

Bearing at location x=0' uses the following support conditions: 0'
Bearing O (0', 10'1"2) LUS26
Supporting Member: (2)2x6 SP 2400f-2.0E
(4) 0.148"x3" nails into supporting member,
(3) 0.148"x3" nails into supported member.

Loading

Truss passed check for 20 psf additional bottom chord live load in areas with 42"-high x 24"-wide clearance.

Wind

Wind loads based on MWFRS with additional C&C member design.

End verticals not exposed to wind pressure.

Wind loading based on both gable and hip roof types.

Additional Notes

Refer to DWG PB160166118 for piggyback details.

YOONHWAK KIM
LICENSE
No. 86367
STATE OF FLORIDA
PROFESSIONAL ENGINEER

FL REG# 278, Yoonhwak Kim, FL PE #86367
07/01/2021

****WARNING**** READ AND FOLLOW ALL NOTES ON THIS DRAWING!
****IMPORTANT**** FURNISH THIS DRAWING TO ALL CONTRACTORS INCLUDING THE INSTALLERS

Trusses require extreme care in fabricating, handling, shipping, installing and bracing. Refer to and follow the latest edition of BCSI (Building Component Safety Information, by TPI and SBCA) for safety practices prior to performing these functions. Installers shall provide temporary bracing per BCSI. Unless noted otherwise, top chord shall have properly attached structural sheathing and bottom chord shall have a properly attached rigid ceiling. Locations shown for permanent lateral restraint of webs shall have bracing installed per BCSI sections B3, B7, or B10, as applicable. Apply plates to each face of truss and position as shown above and on the Joint Details, unless noted otherwise. Refer to drawings 160A-Z for standard plate positions. Refer to job's General Notes page for additional information.

Alpine, a division of ITW Building Components Group Inc. shall not be responsible for any deviation from this drawing, any failure to build the truss in conformance with ANSI/TPI 1, or for handling, shipping, installation and bracing of trusses. A seal on this drawing or cover page listing this drawing, indicates acceptance of professional engineering responsibility solely for the design shown. The suitability and use of this drawing for any structure is the responsibility of the Building Designer per ANSI/TPI 1 Sec.2.

For more information see these web sites: Alpine: alpineitw.com; TPI: tpinst.org; SBCA: sbcindustry.com; ICC: iccsafe.org; AWC: awc.org

ALPINE AN ITW COMPANY
6750 Forum Drive
Suite 305
Orlando FL, 32821

SEQN: 626744 SPEC FROM: CDM	Ply: 1 Qty: 1	**Job Number:** 21-5719 Jones/Freeman **Truss Label:** A09	Cust: R 215 JRef:1X6P2150009 T38 DrwNo: 182.21.1412.53830 / YK 07/01/2021

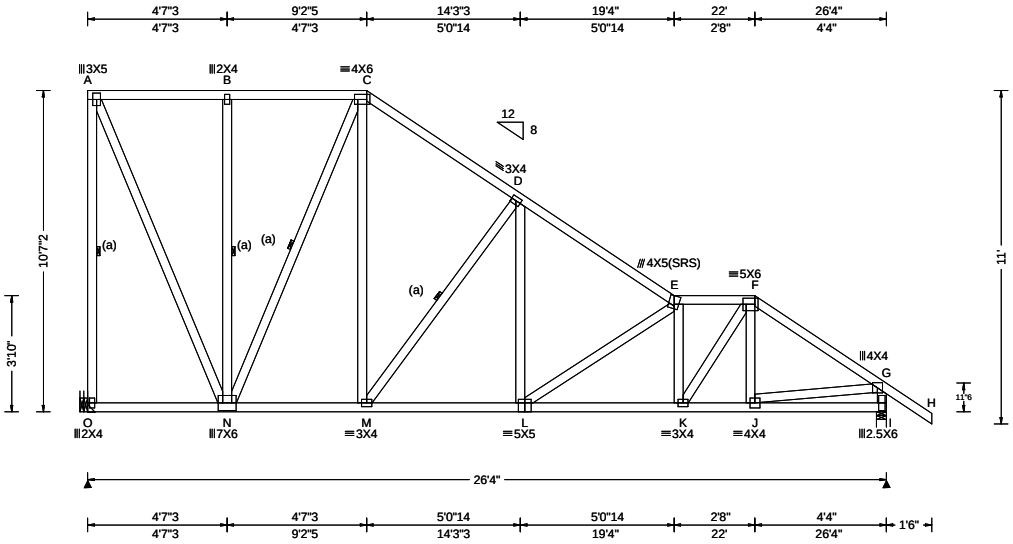

Loading Criteria (psf)

TCLL: 20.00
TCDL: 10.00
BCLL: 0.00
BCDL: 10.00
Des Ld: 40.00
NCBCLL: 10.00
Soffit: 2.00
Load Duration: 1.25
Spacing: 24.0 "

Wind Criteria

Wind Std: ASCE 7-16
Speed: 130 mph
Enclosure: Closed
Risk Category: II
EXP: C Kzt: NA
Mean Height: 16.05 ft
TCDL: 5.0 psf
BCDL: 5.0 psf
MWFRS Parallel Dist: h to 2h
C&C Dist a: 3.00 ft
Loc. from endwall: not in 9.00 ft
GCpi: 0.18
Wind Duration: 1.60

Snow Criteria (Pg,Pf in PSF)

Pg: NA Ct: NA CAT: NA
Pf: NA Ce: NA
Lu: NA Cs: NA
Snow Duration: NA

Building Code:
FBC 7th Ed. 2020 Res.
TPI Std: 2014
Rep Fac: Yes
FT/RT:20(0)/10(0)
Plate Type(s):
WAVE

Defl/CSI Criteria

PP Deflection in	loc	L/defl	L/#
VERT(LL): 0.077	L	999	240
VERT(CL): 0.144	L	999	180
HORZ(LL): 0.027	A	-	-
HORZ(TL): 0.051	A	-	-

Creep Factor: 2.0
Max TC CSI: 0.319
Max BC CSI: 0.497
Max Web CSI: 0.677

VIEW Ver: 21.01.01A.0521.20

▲ Maximum Reactions (lbs)

Loc	Gravity R+	/ R-	/ Rh	Non-Gravity / Rw	/ U	/ RL
O	1315	/-	/-	/659	/-	/270
I	1291	/-	/-	/774	/-	/-

Wind reactions based on MWFRS
O Brg Width = - Min Req = -
I Brg Width = 4.0 Min Req = 1.5
Bearing I is a rigid surface.
Members not listed have forces less than 375#

Maximum Top Chord Forces Per Ply (lbs)

Chords	Tens.	Comp.	Chords	Tens.	Comp.
A - B	27	-492	D - E	107	-1546
B - C	27	-493	E - F	214	-1713
C - D	78	-1006	F - G	199	-1568

Maximum Bot Chord Forces Per Ply (lbs)

Chords	Tens.	Comp.	Chords	Tens.	Comp.
O - N	416	-183	L - K	1767	-75
N - M	756	0	K - J	1235	-64
M - L	1204	0			

Maximum Web Forces Per Ply (lbs)

Webs	Tens.	Comp.	Webs	Tens.	Comp.
A - O	44	-1222	L - E	246	-672
A - N	1209	-65	E - K	51	-654
N - C	195	-646	K - F	856	-16
C - M	808	-172	J - G	1212	-59
M - D	272	-765	G - I	237	-1250
D - L	569	-89			

Lumber

Top chord: 2x4 SP #2;
Bot chord: 2x4 SP #2;
Webs: 2x4 SP #3;

Bracing

(a) Continuous lateral restraint equally spaced on member.

Hangers / Ties

Simpson Construction Hardware is specified based on the most current information provided by Simpson Strong-Tie. Please refer to the most recent Simpson Strong-Tie catalog for additional information.

Recommended hanger connections are based on manufacturer tested capacities and calculations. Conditions may exist that require different connections than indicated. Refer to manufacturer publication for additional information.

Hanger specified assumes connection to supporting chord is located a minimum of five times the depth of the supporting chord from any unsupported end, unless unsupported chord end has 85% plating coverage.

Bearing at location x=0' uses the following support conditions: 0'
Bearing O (0', 10'1"2) HUS26
Supporting Member: (2)2x6 SP 2400f-2.0E
(14) 0.148"x3" nails into supporting member,
(4) 0.148"x3" nails into supported member.

Loading

Truss passed check for 20 psf additional bottom chord live load in areas with 42"-high x 24"-wide clearance.

Wind

Wind loads based on MWFRS with additional C&C member design.

End verticals not exposed to wind pressure.

Wind loading based on both gable and hip roof types.

Additional Notes

Refer to DWG PB160160118 for piggyback details.

YOONHWAK KIM LICENSE No. 86367 STATE OF FLORIDA PROFESSIONAL ENGINEER

FL REG# 278, Yoonhwak Kim, FL PE #86367
07/01/2021

****WARNING**** READ AND FOLLOW ALL NOTES ON THIS DRAWING!
****IMPORTANT**** FURNISH THIS DRAWING TO ALL CONTRACTORS INCLUDING THE INSTALLERS

Trusses require extreme care in fabricating, handling, shipping, installing and bracing. Refer to and follow the latest edition of BCSI (Building Component Safety Information, by TPI and SBCA) for safety practices prior to performing these functions. Installers shall provide temporary bracing per BCSI. Unless noted otherwise, top chord shall have properly attached structural sheathing and bottom chord shall have a properly attached rigid ceiling. Locations shown for permanent lateral restraint of webs shall have bracing installed per BCSI sections B3, B7, or B10, as applicable. Apply plates to each face of truss and position as shown above and on the Joint Details, unless noted otherwise. Refer to drawings 160A-Z for standard plate positions. Refer to job's General Notes page for additional information.

Alpine, a division of ITW Building Components Group Inc. shall not be responsible for any deviation from this drawing, any failure to build the truss in conformance with ANSI/TPI 1, or for handling, shipping, installation and bracing of trusses. A seal on this drawing or cover page listing this drawing, indicates acceptance of professional engineering responsibility solely for the design shown. The suitability and use of this drawing for any structure is the responsibility of the Building Designer per ANSI/TPI 1 Sec.2.

For more information see these web sites: Alpine: alpineitw.com; TPI: tpinst.org; SBCA: sbcindustry.com; ICC: iccsafe.org; AWC: awc.org

ALPINE AN ITW COMPANY
6750 Forum Drive
Suite 305
Orlando FL, 32821

SEQN: 626731 SPEC	Ply: 1	**Job Number:** 21-5719	Cust: R 215 JRef:1X6P2150009 T37
FROM: CDM	Qty: 1	Jones/Freeman	DrwNo: 182.21.1412.56853
		Truss Label: A10	/ YK 07/01/2021

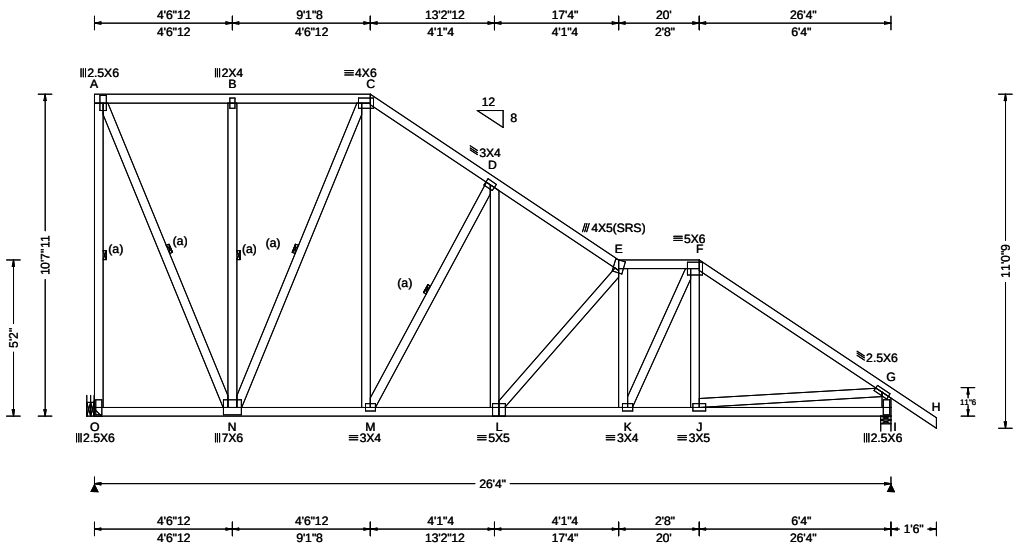

Loading Criteria (psf)

TCLL: 20.00
TCDL: 10.00
BCLL: 0.00
BCDL: 10.00
Des Ld: 40.00
NCBCLL: 10.00
Soffit: 2.00
Load Duration: 1.25
Spacing: 24.0 "

Wind Criteria

Wind Std: ASCE 7-16
Speed: 130 mph
Enclosure: Closed
Risk Category: II
EXP: C Kzt: NA
Mean Height: 15.39 ft
TCDL: 5.0 psf
BCDL: 5.0 psf
MWFRS Parallel Dist: h to 2h
C&C Dist a: 3.00 ft
Loc. from endwall: not in 9.00 ft
GCpi: 0.18
Wind Duration: 1.60

Snow Criteria (Pg,Pf in PSF)

Pg: NA Ct: NA CAT: NA
Pf: NA Ce: NA
Lu: NA Cs: NA
Snow Duration: NA

Building Code:
FBC 7th Ed. 2020 Res.
TPI Std: 2014
Rep Fac: Yes
FT/RT:20(0)/10(0)
Plate Type(s):
WAVE

Defl/CSI Criteria

PP Deflection in	loc	L/defl	L/#
VERT(LL): 0.066	L	999	240
VERT(CL): 0.126	L	999	180
HORZ(LL): 0.021	A	-	-
HORZ(TL): 0.041	A	-	-

Creep Factor: 2.0
Max TC CSI: 0.622
Max BC CSI: 0.462
Max Web CSI: 0.659

VIEW Ver: 21.01.01A.0521.20

▲Maximum Reactions (lbs)

Loc	Gravity R+	/ R-	/ Rh	Non-Gravity / Rw	/ U	/ RL
O	1271	/-	/-	/658	/193	/269
I	1248	/-	/-	/776	/25	/-

Wind reactions based on MWFRS
O Brg Width = - Min Req = -
I Brg Width = 4.0 Min Req = 1.5
Bearing I is a rigid surface.
Members not listed have forces less than 375#

Maximum Top Chord Forces Per Ply (lbs)

Chords	Tens.	Comp.	Chords	Tens.	Comp.
A - B	216	- 469	D - E	359	- 1312
B - C	216	- 469	E - F	400	- 1384
C - D	324	- 926	F - G	366	- 1521

Maximum Bot Chord Forces Per Ply (lbs)

Chords	Tens.	Comp.	Chords	Tens.	Comp.
O - N	414	- 183	L - K	1407	- 214
N - M	707	0	K - J	1174	- 181
M - L	1025	- 48			

Maximum Web Forces Per Ply (lbs)

Webs	Tens.	Comp.	Webs	Tens.	Comp.
A - O	602	- 1179	L - E	258	- 581
A - N	1162	- 534	E - K	103	- 388
N - C	229	- 589	K - F	477	- 92
C - M	755	- 205	J - G	1085	- 154
M - D	277	- 681	G - I	350	- 1191
D - L	531	- 155			

Lumber

Top chord: 2x4 SP #2;
Bot chord: 2x4 SP #2;
Webs: 2x4 SP #3;

Bracing

(a) Continuous lateral restraint equally spaced on member.

Hangers / Ties

Simpson Construction Hardware is specified based on the most current information provided by Simpson Strong-Tie. Please refer to the most recent Simpson Strong-Tie catalog for additional information.

Recommended hanger connections are based on manufacturer tested capacities and calculations. Conditions may exist that require different connections than indicated. Refer to manufacturer publication for additional information.

Hanger specified assumes connection to supporting chord is located a minimum of five times the depth of the supporting chord from any unsupported end, unless unsupported chord end has 85% plating coverage.

Bearing at location x=0' uses the following support conditions: 0'
Bearing O (0', 10'1"2) HUS26
Supporting Member: (2)2x6 SP 2400f-2.0E
(14) 0.148"x3" nails into supporting member,
(4) 0.148"x3" nails into supported member.

Loading

Truss passed check for 20 psf additional bottom chord live load in areas with 42"-high x 24"-wide clearance.

Wind

Wind loads based on MWFRS with additional C&C member design.

End verticals not exposed to wind pressure.

Wind loading based on both gable and hip roof types.

YOONHWAK KIM
LICENSE
No. 86367
STATE OF
FLORIDA
PROFESSIONAL ENGINEER

FL REG# 278, Yoonhwak Kim, FL PE #86367
07/01/2021

****WARNING**** READ AND FOLLOW ALL NOTES ON THIS DRAWING!
****IMPORTANT**** FURNISH THIS DRAWING TO ALL CONTRACTORS INCLUDING THE INSTALLERS

Trusses require extreme care in fabricating, handling, shipping, installing and bracing. Refer to and follow the latest edition of BCSI (Building Component Safety Information, by TPI and SBCA) for safety practices prior to performing these functions. Installers shall provide temporary bracing per BCSI. Unless noted otherwise, top chord shall have properly attached structural sheathing and bottom chord shall have a properly attached rigid ceiling. Locations shown for permanent lateral restraint of webs shall have bracing installed per BCSI sections B3, B7, or B10, as applicable. Apply plates to each face of truss and position as shown above and on the Joint Details, unless noted otherwise. Refer to drawings 160A-Z for standard plate positions. Refer to job's General Notes page for additional information.

Alpine, a division of ITW Building Components Group Inc. shall not be responsible for any deviation from this drawing, any failure to build the truss in conformance with ANSI/TPI 1, or for handling, shipping, installation and bracing of trusses. A seal on this drawing or cover page listing this drawing, indicates acceptance of professional engineering responsibility solely for the design shown. The suitability and use of this drawing for any structure is the responsibility of the Building Designer per ANSI/TPI 1 Sec.2.

For more information see these web sites: Alpine: alpineitw.com; TPI: tpinst.org; SBCA: sbcindustry.com; ICC: iccsafe.org; AWC: awc.org

ALPINE AN ITW COMPANY
6750 Forum Drive
Suite 305
Orlando FL, 32821

SEQN: 626728 SPEC FROM: CDM	Ply: 1 Qty: 1	**Job Number:** 21-5719 Jones/Freeman **Truss Label:** A11	Cust: R 215 JRef:1X6P2150009 T43 DrwNo: 182.21.1412.58663 / YK 07/01/2021

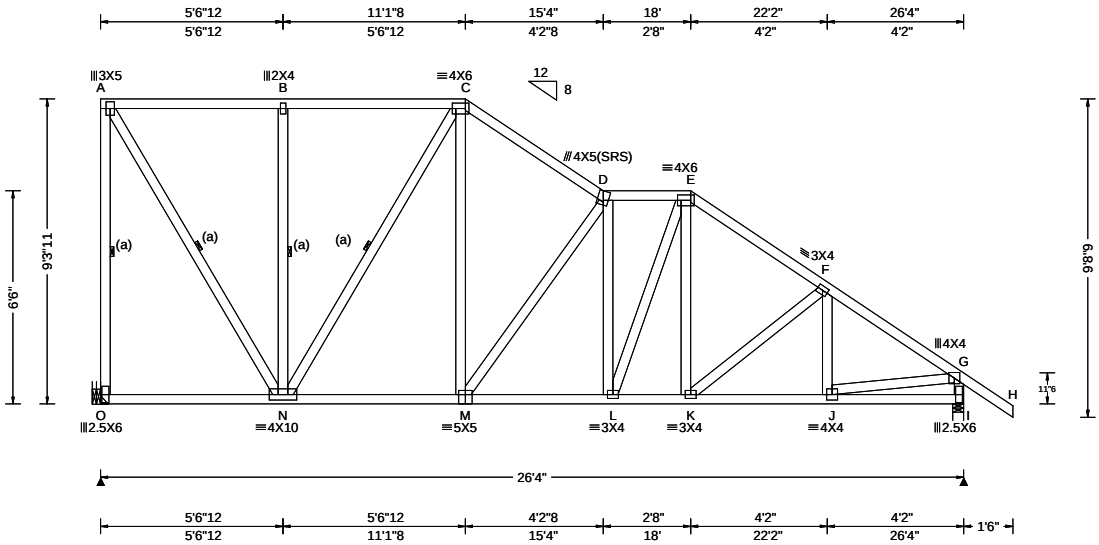

Loading Criteria (psf)	**Wind Criteria**	**Snow Criteria** (Pg,Pf in PSF)	**Defl/CSI Criteria**
TCLL: 20.00 TCDL: 10.00 BCLL: 0.00 BCDL: 10.00 Des Ld: 40.00 NCBCLL: 10.00 Soffit: 2.00 Load Duration: 1.25 Spacing: 24.0 "	Wind Std: ASCE 7-16 Speed: 130 mph Enclosure: Closed Risk Category: II EXP: C Kzt: NA Mean Height: 15.00 ft TCDL: 5.0 psf BCDL: 5.0 psf MWFRS Parallel Dist: h to 2h C&C Dist a: 3.00 ft Loc. from endwall: not in 9.00 ft GCpi: 0.18 Wind Duration: 1.60	Pg: NA Ct: NA CAT: NA Pf: NA Ce: NA Lu: NA Cs: NA Snow Duration: NA Building Code: FBC 7th Ed. 2020 Res. TPI Std: 2014 Rep Fac: Yes FT/RT:20(0)/10(0) Plate Type(s): WAVE	PP Deflection in loc L/defl L/# VERT(LL): 0.057 D 999 240 VERT(CL): 0.107 D 999 180 HORZ(LL): 0.018 A - - HORZ(TL): 0.035 A - - Creep Factor: 2.0 Max TC CSI: 0.513 Max BC CSI: 0.453 Max Web CSI: 0.659 VIEW Ver: 21.01.01A.0521.20

▲ Maximum Reactions (lbs)

	Gravity			Non-Gravity		
Loc	R+	/ R-	/ Rh	/ Rw	/ U	/ RL
O	1287	/-	/-	/624	/189	/233
I	1262	/-	/-	/773	/44	/-

Wind reactions based on MWFRS
O Brg Width = - Min Req = -
I Brg Width = 4.0 Min Req = 1.5
Bearing I is a rigid surface.
Members not listed have forces less than 375#

Maximum Top Chord Forces Per Ply (lbs)

Chords	Tens.	Comp.	Chords	Tens.	Comp.
A - B	307	- 639	D - E	453	- 1215
B - C	308	- 639	E - F	459	- 1387
C - D	432	- 1134	F - G	404	- 1523

Maximum Bot Chord Forces Per Ply (lbs)

Chords	Tens.	Comp.	Chords	Tens.	Comp.
N - M	890	- 87	L - K	1088	- 201
M - L	1229	- 234	K - J	1211	- 245

Maximum Web Forces Per Ply (lbs)

Webs	Tens.	Comp.	Webs	Tens.	Comp.
A - O	628	- 1176	C - M	684	- 178
A - N	1216	- 585	M - D	275	- 603
B - N	404	- 410	J - G	1192	- 239
N - C	189	- 477	G - I	373	- 1224

Lumber

Top chord: 2x4 SP #2;
Bot chord: 2x4 SP #2;
Webs: 2x4 SP #3;

Bracing

(a) Continuous lateral restraint equally spaced on member.

Hangers / Ties

Simpson Construction Hardware is specified based on the most current information provided by Simpson Strong-Tie. Please refer to the most recent Simpson Strong-Tie catalog for additional information.

Recommended hanger connections are based on manufacturer tested capacities and calculations. Conditions may exist that require different connections than indicated. Refer to manufacturer publication for additional information.

Hanger specified assumes connection to supporting chord is located a minimum of five times the depth of the supporting chord from any unsupported end, unless unsupported chord end has 85% plating coverage.

Bearing at location x=0' uses the following support conditions: 0'
Bearing O (0', 10'1"2) HUS26
Supporting Member: (2)2x6 SP 2400f-2.0E
(14) 0.148"x3" nails into supporting member,
(4) 0.148"x3" nails into supported member.

Loading

Truss passed check for 20 psf additional bottom chord live load in areas with 42"-high x 24"-wide clearance.

Wind

Wind loads based on MWFRS with additional C&C member design.

End verticals not exposed to wind pressure.

Wind loading based on both gable and hip roof types.

YOONHWAK KIM
LICENSE
No. 86367
STATE OF
FLORIDA
PROFESSIONAL ENGINEER

FL REG# 278, Yoonhwak Kim, FL PE #86367
07/01/2021

****WARNING**** READ AND FOLLOW ALL NOTES ON THIS DRAWING!
****IMPORTANT**** FURNISH THIS DRAWING TO ALL CONTRACTORS INCLUDING THE INSTALLERS

Trusses require extreme care in fabricating, handling, shipping, installing and bracing. Refer to and follow the latest edition of BCSI (Building Component Safety Information, by TPI and SBCA) for safety practices prior to performing these functions. Installers shall provide temporary bracing per BCSI. Unless noted otherwise, top chord shall have properly attached structural sheathing and bottom chord shall have a properly attached rigid ceiling. Locations shown for permanent lateral restraint of webs shall have bracing installed per BCSI sections B3, B7, or B10, as applicable. Apply plates to each face of truss and position as shown above and on the Joint Details, unless noted otherwise. Refer to drawings 160A-Z for standard plate positions. Refer to job's General Notes page for additional information.

Alpine, a division of ITW Building Components Group Inc. shall not be responsible for any deviation from this drawing, any failure to build the truss in conformance with ANSI/TPI 1, or for handling, shipping, installation and bracing of trusses. A seal on this drawing or cover page listing this drawing, indicates acceptance of professional engineering responsibility solely for the design shown. The suitability and use of this drawing for any structure is the responsibility of the Building Designer per ANSI/TPI 1 Sec.2.

For more information see these web sites: Alpine: alpineitw.com; TPI: tpinst.org; SBCA: sbcindustry.com; ICC: iccsafe.org; AWC: awc.org

ALPINE
AN ITW COMPANY
6750 Forum Drive
Suite 305
Orlando FL, 32821

SEQN: 626725 SPEC	Ply: 1	**Job Number:** 21-5719	Cust: R 215 JRef:1X6P2150009 T18
FROM: CDM	Qty: 1	Jones/Freeman	DrwNo: 182.21.1413.00340
		Truss Label: A12	/ YK 07/01/2021

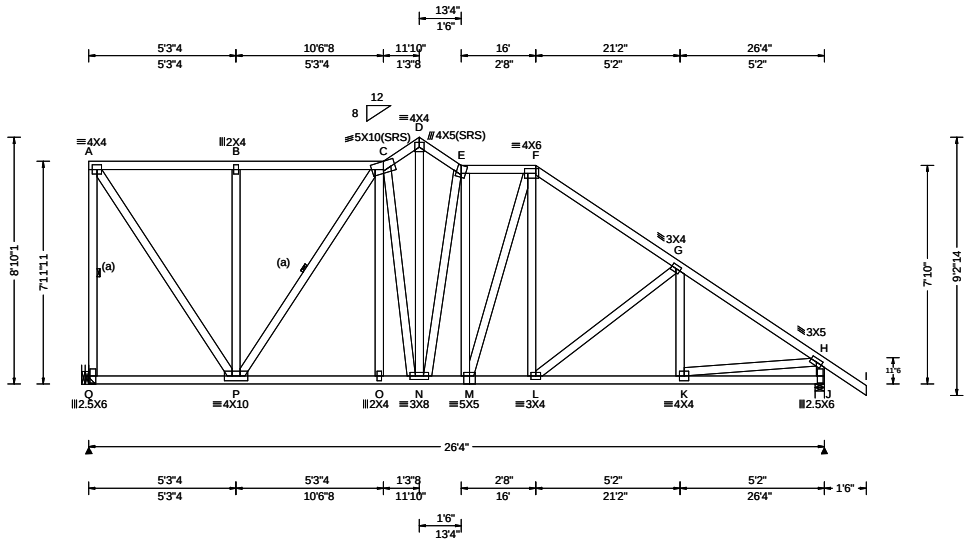

Loading Criteria (psf)	**Wind Criteria**	**Snow Criteria** (Pg,Pf in PSF)	**Defl/CSI Criteria**
TCLL: 20.00	Wind Std: ASCE 7-16	Pg: NA Ct: NA CAT: NA	PP Deflection in loc L/defl L/#
TCDL: 10.00	Speed: 130 mph	Pf: NA Ce: NA	VERT(LL): 0.056 E 999 240
BCLL: 0.00	Enclosure: Closed	Lu: NA Cs: NA	VERT(CL): 0.108 E 999 180
BCDL: 10.00	Risk Category: II	Snow Duration: NA	HORZ(LL): 0.024 A - -
Des Ld: 40.00	EXP: C Kzt: NA		HORZ(TL): 0.046 A - -
NCBCLL: 10.00	Mean Height: 15.00 ft	Building Code:	Creep Factor: 2.0
Soffit: 2.00	TCDL: 5.0 psf	FBC 7th Ed. 2020 Res.	Max TC CSI: 0.389
Load Duration: 1.25	BCDL: 5.0 psf	TPI Std: 2014	Max BC CSI: 0.414
Spacing: 24.0 "	MWFRS Parallel Dist: h to 2h	Rep Fac: Yes	Max Web CSI: 0.941
	C&C Dist a: 3.00 ft	FT/RT:20(0)/10(0)	
	Loc. from endwall: not in 9.00 ft	Plate Type(s):	
	GCpi: 0.18	WAVE	VIEW Ver: 21.01.01A.0521.20
	Wind Duration: 1.60		

▲ Maximum Reactions (lbs)

Loc	Gravity R+	Gravity / R-	Gravity / Rh	Non-Gravity / Rw	Non-Gravity / U	Non-Gravity / RL
Q	1255	/-	/-	/607	/182	/222
J	1251	/-	/-	/766	/61	/-

Wind reactions based on MWFRS
Q Brg Width = - Min Req = -
J Brg Width = 4.0 Min Req = 1.5
Bearing J is a rigid surface.
Members not listed have forces less than 375#

Maximum Top Chord Forces Per Ply (lbs)

Chords	Tens.	Comp.	Chords	Tens.	Comp.
A - B	332	- 702	E - F	441	- 1019
B - C	332	- 703	F - G	461	- 1283
C - D	508	- 1106	G - H	412	- 1534
D - E	482	- 1087			

Maximum Bot Chord Forces Per Ply (lbs)

Chords	Tens.	Comp.	Chords	Tens.	Comp.
P - O	1000	- 174	M - L	985	- 170
O - N	997	- 175	L - K	1206	- 237
N - M	1022	- 185			

Maximum Web Forces Per Ply (lbs)

Webs	Tens.	Comp.	Webs	Tens.	Comp.
A - Q	607	- 1154	D - N	1018	- 498
A - P	1241	- 586	N - E	257	- 533
B - P	390	- 404	K - H	1166	- 222
P - C	189	- 525	H - J	375	- 1206
C - N	254	- 473			

Lumber

Top chord: 2x4 SP #2;
Bot chord: 2x4 SP #2;
Webs: 2x4 SP #3;

Bracing

(a) Continuous lateral restraint equally spaced on member.

Hangers / Ties

Simpson Construction Hardware is specified based on the most current information provided by Simpson Strong-Tie. Please refer to the most recent Simpson Strong-Tie catalog for additional information.

Recommended hanger connections are based on manufacturer tested capacities and calculations. Conditions may exist that require different connections than indicated. Refer to manufacturer publication for additional information.

Hanger specified assumes connection to supporting chord is located a minimum of five times the depth of the supporting chord from any unsupported end, unless unsupported chord end has 85% plating coverage.

Bearing at location x=0' uses the following support conditions: 0'
Bearing Q (0', 10'1"2) HUS26
Supporting Member: (2)2x6 SP 2400f-2.0E
(14) 0.148"x3" nails into supporting member,
(4) 0.148"x3" nails into supported member.

Loading

Truss passed check for 20 psf additional bottom chord live load in areas with 42"-high x 24"-wide clearance.

Wind

Wind loads based on MWFRS with additional C&C member design.

End verticals not exposed to wind pressure.

Wind loading based on both gable and hip roof types.

YOONHWAK KIM
LICENSE
No. 86367
STATE OF FLORIDA
PROFESSIONAL ENGINEER

FL REG# 278, Yoonhwak Kim, FL PE #86367
07/01/2021

****WARNING**** READ AND FOLLOW ALL NOTES ON THIS DRAWING!
****IMPORTANT**** FURNISH THIS DRAWING TO ALL CONTRACTORS INCLUDING THE INSTALLERS

Trusses require extreme care in fabricating, handling, shipping, installing and bracing. Refer to and follow the latest edition of BCSI (Building Component Safety Information, by TPI and SBCA) for safety practices prior to performing these functions. Installers shall provide temporary bracing per BCSI. Unless noted otherwise, top chord shall have properly attached structural sheathing and bottom chord shall have a properly attached rigid ceiling. Locations shown for permanent lateral restraint of webs shall have bracing installed per BCSI sections B3, B7, or B10, as applicable. Apply plates to each face of truss and position as shown above and on the Joint Details, unless noted otherwise. Refer to drawings 160A-Z for standard plate positions. Refer to job's General Notes page for additional information.

Alpine, a division of ITW Building Components Group Inc. shall not be responsible for any deviation from this drawing, any failure to build the truss in conformance with ANSI/TPI 1, or for handling, shipping, installation and bracing of trusses. A seal on this drawing or cover page listing this drawing, indicates acceptance of professional engineering responsibility solely for the design shown. The suitability and use of this drawing for any structure is the responsibility of the Building Designer per ANSI/TPI 1 Sec.2.

For more information see these web sites: Alpine: alpineitw.com; TPI: tpinst.org; SBCA: sbcindustry.com; ICC: iccsafe.org; AWC: awc.org

ALPINE AN ITW COMPANY
6750 Forum Drive
Suite 305
Orlando FL, 32821

SEQN: 626722 SPEC FROM: CDM	Ply: 1 Qty: 1	**Job Number:** 21-5719 Jones/Freeman **Truss Label:** A13	Cust: R 215 JRef:1X6P2150009 T29 DrwNo: 182.21.1413.01963 / YK 07/01/2021

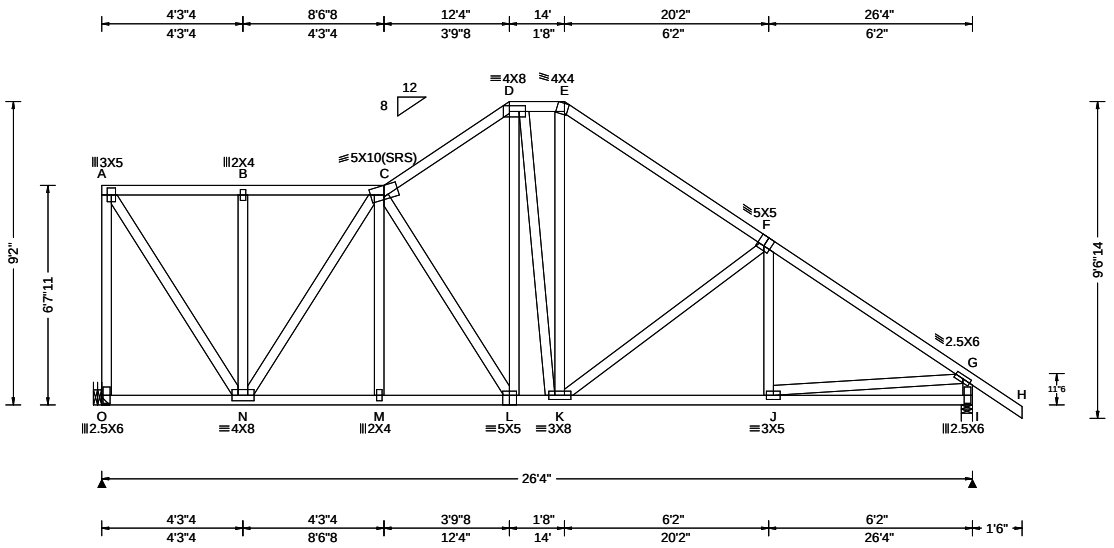

Loading Criteria (psf)

TCLL: 20.00
TCDL: 10.00
BCLL: 0.00
BCDL: 10.00
Des Ld: 40.00
NCBCLL: 10.00
Soffit: 2.00
Load Duration: 1.25
Spacing: 24.0 "

Wind Criteria

Wind Std: ASCE 7-16
Speed: 130 mph
Enclosure: Closed
Risk Category: II
EXP: C Kzt: NA
Mean Height: 15.00 ft
TCDL: 5.0 psf
BCDL: 5.0 psf
MWFRS Parallel Dist: h to 2h
C&C Dist a: 3.00 ft
Loc. from endwall: not in 9.00 ft
GCpi: 0.18
Wind Duration: 1.60

Snow Criteria (Pg,Pf in PSF)

Pg: NA Ct: NA CAT: NA
Pf: NA Ce: NA
Lu: NA Cs: NA
Snow Duration: NA

Building Code:
FBC 7th Ed. 2020 Res.
TPI Std: 2014
Rep Fac: Yes
FT/RT:20(0)/10(0)
Plate Type(s):
WAVE

Defl/CSI Criteria

PP Deflection in	loc	L/defl	L/#
VERT(LL): 0.042	L	999	240
VERT(CL): 0.087	L	999	180
HORZ(LL): 0.018	A	-	-
HORZ(TL): 0.037	A	-	-

Creep Factor: 2.0
Max TC CSI: 0.464
Max BC CSI: 0.483
Max Web CSI: 0.838

VIEW Ver: 21.01.01A.0521.20

▲Maximum Reactions (lbs)

Loc	Gravity R+	/ R-	/ Rh	Non-Gravity / Rw	/ U	/ RL
O	1104	/-	/-	/602	/142	/235
I	1213	/-	/-	/757	/37	/-

Wind reactions based on MWFRS
O Brg Width = - Min Req = -
I Brg Width = 4.0 Min Req = 1.5
Bearing I is a rigid surface.
Members not listed have forces less than 375#

Maximum Top Chord Forces Per Ply (lbs)

Chords	Tens.	Comp.	Chords	Tens.	Comp.
A - B	291	- 645	D - E	386	- 834
B - C	291	- 646	E - F	401	- 1116
C - D	426	- 1056	F - G	363	- 1481

Maximum Bot Chord Forces Per Ply (lbs)

Chords	Tens.	Comp.	Chords	Tens.	Comp.
N - M	1018	- 192	L - K	820	- 81
M - L	1016	- 193	K - J	1148	- 185

Maximum Web Forces Per Ply (lbs)

Webs	Tens.	Comp.	Webs	Tens.	Comp.
A - O	537	- 1068	K - F	172	- 401
A - N	1156	- 521	J - G	1080	- 158
N - C	207	- 667	G - I	342	- 1161
C - L	223	- 382			

Lumber

Top chord: 2x4 SP #2;
Bot chord: 2x4 SP #2;
Webs: 2x4 SP #3;

Hangers / Ties

Simpson Construction Hardware is specified based on the most current information provided by Simpson Strong-Tie. Please refer to the most recent Simpson Strong-Tie catalog for additional information.

Recommended hanger connections are based on manufacturer tested capacities and calculations. Conditions may exist that require different connections than indicated. Refer to manufacturer publication for additional information.

Hanger specified assumes connection to supporting chord is located a minimum of five times the depth of the supporting chord from any unsupported end, unless unsupported chord end has 85% plating coverage.

Bearing at location x=0' uses the following support conditions: 0'
Bearing O (0', 10'1"2) LUS26
Supporting Member: (2)2x6 SP 2400f-2.0E
(4) 0.148"x3" nails into supporting member,
(4) 0.148"x3" nails into supported member.

Wind

Wind loads based on MWFRS with additional C&C member design.

End verticals not exposed to wind pressure.

Wind loading based on both gable and hip roof types.

YOONHWAK KIM
LICENSE
No. 86367
STATE OF
FLORIDA
PROFESSIONAL ENGINEER

FL REG# 278, Yoonhwak Kim, FL PE #86367
07/01/2021

****WARNING**** READ AND FOLLOW ALL NOTES ON THIS DRAWING!
****IMPORTANT**** FURNISH THIS DRAWING TO ALL CONTRACTORS INCLUDING THE INSTALLERS

Trusses require extreme care in fabricating, handling, shipping, installing and bracing. Refer to and follow the latest edition of BCSI (Building Component Safety Information, by TPI and SBCA) for safety practices prior to performing these functions. Installers shall provide temporary bracing per BCSI. Unless noted otherwise, top chord shall have properly attached structural sheathing and bottom chord shall have a properly attached rigid ceiling. Locations shown for permanent lateral restraint of webs shall have bracing installed per BCSI sections B3, B7, or B10, as applicable. Apply plates to each face of truss and position as shown above and on the Joint Details, unless noted otherwise. Refer to drawings 160A-Z for standard plate positions. Refer to job's General Notes page for additional information.

Alpine, a division of ITW Building Components Group Inc. shall not be responsible for any deviation from this drawing, any failure to build the truss in conformance with ANSI/TPI 1, or for handling, shipping, installation and bracing of trusses. A seal on this drawing or cover page listing this drawing, indicates acceptance of professional engineering responsibility solely for the design shown. The suitability and use of this drawing for any structure is the responsibility of the Building Designer per ANSI/TPI 1 Sec.2.

For more information see these web sites: Alpine: alpineitw.com; TPI: tpinst.org; SBCA: sbcindustry.com; ICC: iccsafe.org; AWC: awc.org

ALPINE AN ITW COMPANY
6750 Forum Drive
Suite 305
Orlando FL, 32821

SEQN: 626719 SPEC	Ply: 1	**Job Number:** 21-5719	Cust: R 215 JRef:1X6P2150009 T4
FROM: CDM	Qty: 1	Jones/Freeman	DrwNo: 182.21.1413.03210
		Truss Label: A14	/ YK 07/01/2021

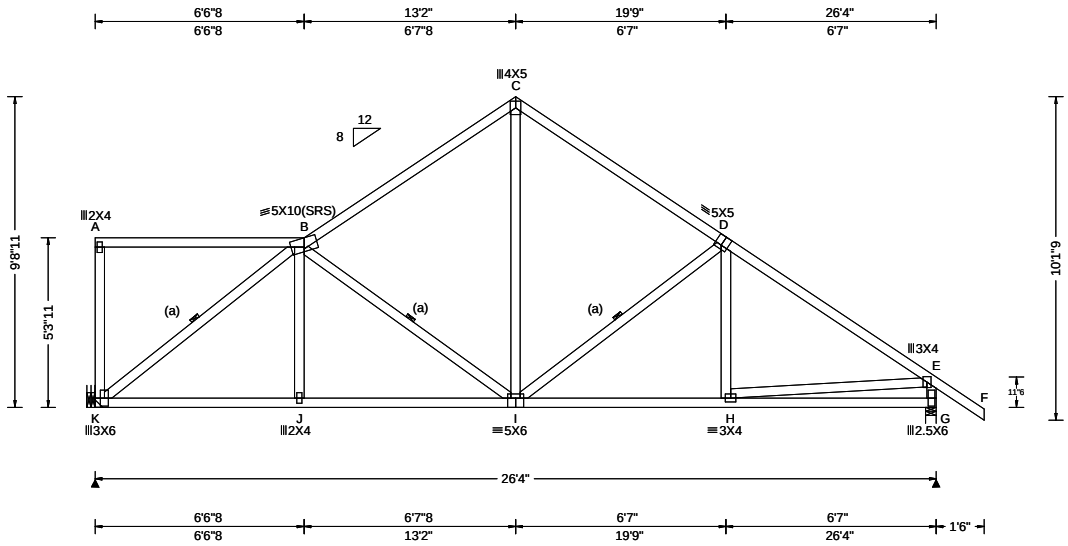

Loading Criteria (psf)

TCLL: 20.00
TCDL: 10.00
BCLL: 0.00
BCDL: 10.00
Des Ld: 40.00
NCBCLL: 10.00
Soffit: 2.00
Load Duration: 1.25
Spacing: 24.0 "

Wind Criteria

Wind Std: ASCE 7-16
Speed: 130 mph
Enclosure: Closed
Risk Category: II
EXP: C Kzt: NA
Mean Height: 15.00 ft
TCDL: 5.0 psf
BCDL: 5.0 psf
MWFRS Parallel Dist: h to 2h
C&C Dist a: 3.00 ft
Loc. from endwall: not in 9.00 ft
GCpi: 0.18
Wind Duration: 1.60

Snow Criteria (Pg,Pf in PSF)

Pg: NA Ct: NA CAT: NA
Pf: NA Ce: NA
Lu: NA Cs: NA
Snow Duration: NA

Building Code:
FBC 7th Ed. 2020 Res.
TPI Std: 2014
Rep Fac: Yes
FT/RT:20(0)/10(0)
Plate Type(s):
WAVE

Defl/CSI Criteria

PP Deflection in	loc	L/defl	L/#
VERT(LL): 0.044	I	999	240
VERT(CL): 0.092	I	999	180
HORZ(LL): 0.019	E	-	-
HORZ(TL): 0.040	E	-	-

Creep Factor: 2.0
Max TC CSI: 0.849
Max BC CSI: 0.620
Max Web CSI: 0.489

VIEW Ver: 21.01.01A.0521.20

▲ Maximum Reactions (lbs)

Loc	Gravity R+	/ R-	/ Rh	Non-Gravity / Rw	/ U	/ RL
K	1104	/-	/-	/601	/91	/253
G	1213	/-	/-	/747	/9	/-

Wind reactions based on MWFRS
K Brg Width = - Min Req = -
G Brg Width = 4.0 Min Req = 1.5
Bearing G is a rigid surface.
Members not listed have forces less than 375#

Maximum Top Chord Forces Per Ply (lbs)

Chords	Tens.	Comp.	Chords	Tens.	Comp.
B - C	317	- 1063	D - E	296	- 1474
C - D	331	- 1082			

Maximum Bot Chord Forces Per Ply (lbs)

Chords	Tens.	Comp.	Chords	Tens.	Comp.
K - J	1103	- 126	I - H	1135	- 122
J - I	1098	- 128			

Maximum Web Forces Per Ply (lbs)

Webs	Tens.	Comp.	Webs	Tens.	Comp.
K - B	403	- 1388	H - E	1048	- 89
C - I	642	- 156	E - G	302	- 1157
I - D	179	- 418			

Lumber

Top chord: 2x4 SP #2;
Bot chord: 2x4 SP #2;
Webs: 2x4 SP #3;

Bracing

(a) Continuous lateral restraint equally spaced on member.

Hangers / Ties

Simpson Construction Hardware is specified based on the most current information provided by Simpson Strong-Tie. Please refer to the most recent Simpson Strong-Tie catalog for additional information.

Recommended hanger connections are based on manufacturer tested capacities and calculations. Conditions may exist that require different connections than indicated. Refer to manufacturer publication for additional information.

Hanger specified assumes connection to supporting chord is located a minimum of five times the depth of the supporting chord from any unsupported end, unless unsupported chord end has 85% plating coverage.

Bearing at location x=0' uses the following support conditions: 0'
Bearing K (0', 10'1"2) LUS26
Supporting Member: (2)2x6 SP 2400f-2.0E
(4) 0.148"x3" nails into supporting member,
(4) 0.148"x3" nails into supported member.

Wind

Wind loads based on MWFRS with additional C&C member design.

End verticals not exposed to wind pressure.

Wind loading based on both gable and hip roof types.

YOONHWAK KIM
LICENSE
No. 86367
STATE OF FLORIDA
PROFESSIONAL ENGINEER

FL REG# 278, Yoonhwak Kim, FL PE #86367
07/01/2021

****WARNING**** READ AND FOLLOW ALL NOTES ON THIS DRAWING!
****IMPORTANT**** FURNISH THIS DRAWING TO ALL CONTRACTORS INCLUDING THE INSTALLERS

Trusses require extreme care in fabricating, handling, shipping, installing and bracing. Refer to and follow the latest edition of BCSI (Building Component Safety Information, by TPI and SBCA) for safety practices prior to performing these functions. Installers shall provide temporary bracing per BCSI. Unless noted otherwise, top chord shall have properly attached structural sheathing and bottom chord shall have a properly attached rigid ceiling. Locations shown for permanent lateral restraint of webs shall have bracing installed per BCSI sections B3, B7, or B10, as applicable. Apply plates to each face of truss and position as shown above and on the Joint Details, unless noted otherwise. Refer to drawings 160A-Z for standard plate positions. Refer to job's General Notes page for additional information.

Alpine, a division of ITW Building Components Group Inc. shall not be responsible for any deviation from this drawing, any failure to build the truss in conformance with ANSI/TPI 1, or for handling, shipping, installation and bracing of trusses. A seal on this drawing or cover page listing this drawing, indicates acceptance of professional engineering responsibility solely for the design shown. The suitability and use of this drawing for any structure is the responsibility of the Building Designer per ANSI/TPI 1 Sec.2.

For more information see these web sites: Alpine: alpineitw.com; TPI: tpinst.org; SBCA: sbcindustry.com; ICC: iccsafe.org; AWC: awc.org

ALPINE
AN ITW COMPANY
6750 Forum Drive
Suite 305
Orlando FL, 32821

SEQN: 626716 SPEC	Ply: 1	**Job Number:** 21-5719	Cust: R 215 JRef:1X6P2150009 T24
FROM: CDM	Qty: 1	Jones/Freeman	DrwNo: 182.21.1413.04747
		Truss Label: A15	/ YK 07/01/2021

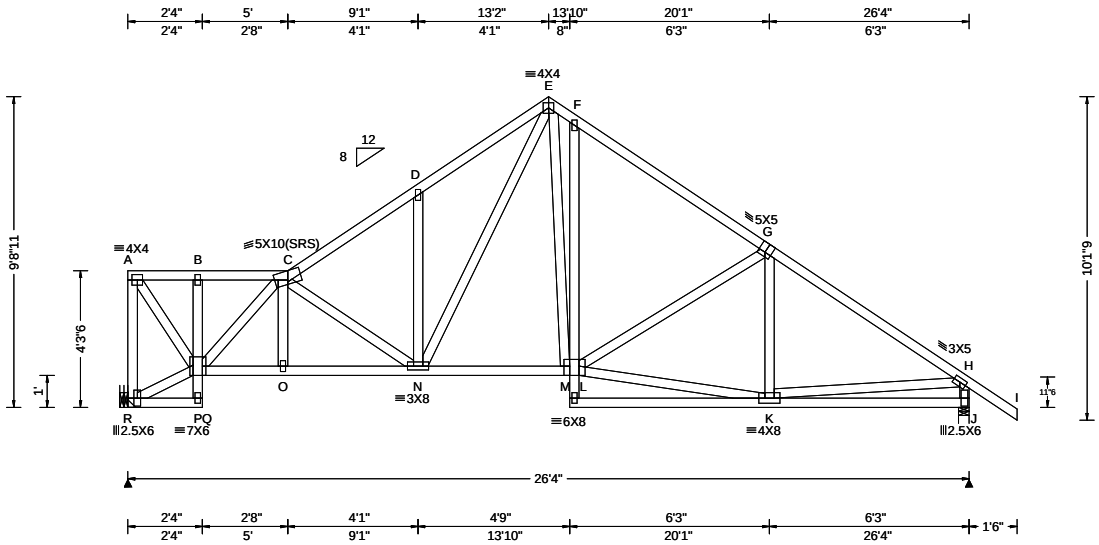

Loading Criteria (psf)

TCLL: 20.00
TCDL: 10.00
BCLL: 0.00
BCDL: 10.00
Des Ld: 40.00
NCBCLL: 10.00
Soffit: 2.00
Load Duration: 1.25
Spacing: 24.0 "

Wind Criteria

Wind Std: ASCE 7-16
Speed: 130 mph
Enclosure: Closed
Risk Category: II
EXP: C Kzt: NA
Mean Height: 15.00 ft
TCDL: 5.0 psf
BCDL: 5.0 psf
MWFRS Parallel Dist: h to 2h
C&C Dist a: 3.00 ft
Loc. from endwall: not in 9.00 ft
GCpi: 0.18
Wind Duration: 1.60

Snow Criteria (Pg,Pf in PSF)

Pg: NA Ct: NA CAT: NA
Pf: NA Ce: NA
Lu: NA Cs: NA
Snow Duration: NA

Building Code:
FBC 7th Ed. 2020 Res.
TPI Std: 2014
Rep Fac: Yes
FT/RT:20(0)/10(0)
Plate Type(s):
WAVE

Defl/CSI Criteria

PP Deflection in	loc	L/defl	L/#
VERT(LL): 0.063	D	999	240
VERT(CL): 0.126	D	999	180
HORZ(LL): 0.036	H	-	-
HORZ(TL): 0.073	H	-	-

Creep Factor: 2.0
Max TC CSI: 0.472
Max BC CSI: 0.520
Max Web CSI: 0.511

VIEW Ver: 21.01.01A.0521.20

▲ Maximum Reactions (lbs)

Loc	Gravity R+	/ R-	/ Rh	Non-Gravity / Rw	/ U	/ RL
R	1152	/-	/-	/592	/59	/255
J	1255	/-	/-	/742	/6	/-

Wind reactions based on MWFRS
R Brg Width = - Min Req = -
J Brg Width = 4.0 Min Req = 1.5
Bearing J is a rigid surface.
Members not listed have forces less than 375#

Maximum Top Chord Forces Per Ply (lbs)

Chords	Tens.	Comp.	Chords	Tens.	Comp.
A - B	189	- 822	E - F	415	- 1256
B - C	191	- 832	F - G	321	- 1341
C - D	341	- 1580	G - H	288	- 1549
D - E	463	- 1588			

Maximum Bot Chord Forces Per Ply (lbs)

Chords	Tens.	Comp.	Chords	Tens.	Comp.
P - O	1597	- 201	N - L	949	- 1
O - N	1594	- 202			

Maximum Web Forces Per Ply (lbs)

Webs	Tens.	Comp.	Webs	Tens.	Comp.
A - R	297	- 1118	E - L	743	- 222
A - P	1341	- 308	L - K	1208	- 119
P - C	239	- 1075	K - H	1129	- 94
C - N	168	- 409	H - J	295	- 1202
N - E	718	- 245			

Lumber

Top chord: 2x4 SP #2;
Bot chord: 2x4 SP #2;
Webs: 2x4 SP #3;

Plating Notes

All plates are 2X4 except as noted.

Hangers / Ties

Simpson Construction Hardware is specified based on the most current information provided by Simpson Strong-Tie. Please refer to the most recent Simpson Strong-Tie catalog for additional information.

Recommended hanger connections are based on manufacturer tested capacities and calculations. Conditions may exist that require different connections than indicated. Refer to manufacturer publication for additional information.

Hanger specified assumes connection to supporting chord is located a minimum of five times the depth of the supporting chord from any unsupported end, unless unsupported chord end has 85% plating coverage.

Bearing at location x=0' uses the following support conditions: 0'
Bearing R (0', 10'1"2) LUS26
Supporting Member: (2)2x6 SP 2400f-2.0E
(4) 0.148"x3" nails into supporting member,
(4) 0.148"x3" nails into supported member.

Loading

Truss passed check for 20 psf additional bottom chord live load in areas with 42"-high x 24"-wide clearance.

Wind

Wind loads based on MWFRS with additional C&C member design.

End verticals not exposed to wind pressure.

Wind loading based on both gable and hip roof types.

YOONHWAK KIM LICENSE No. 86367 STATE OF FLORIDA PROFESSIONAL ENGINEER

FL REG# 278, Yoonhwak Kim, FL PE #86367
07/01/2021

****WARNING**** READ AND FOLLOW ALL NOTES ON THIS DRAWING!
****IMPORTANT**** FURNISH THIS DRAWING TO ALL CONTRACTORS INCLUDING THE INSTALLERS

Trusses require extreme care in fabricating, handling, shipping, installing and bracing. Refer to and follow the latest edition of BCSI (Building Component Safety Information, by TPI and SBCA) for safety practices prior to performing these functions. Installers shall provide temporary bracing per BCSI. Unless noted otherwise, top chord shall have properly attached structural sheathing and bottom chord shall have a properly attached rigid ceiling. Locations shown for permanent lateral restraint of webs shall have bracing installed per BCSI sections B3, B7, or B10, as applicable. Apply plates to each face of truss and position as shown above and on the Joint Details, unless noted otherwise. Refer to drawings 160A-Z for standard plate positions. Refer to job's General Notes page for additional information.

Alpine, a division of ITW Building Components Group Inc. shall not be responsible for any deviation from this drawing, any failure to build the truss in conformance with ANSI/TPI 1, or for handling, shipping, installation and bracing of trusses. A seal on this drawing or cover page listing this drawing, indicates acceptance of professional engineering responsibility solely for the design shown. The suitability and use of this drawing for any structure is the responsibility of the Building Designer per ANSI/TPI 1 Sec.2.

For more information see these web sites: Alpine: alpineitw.com; TPI: tpinst.org; SBCA: sbcindustry.com; ICC: iccsafe.org; AWC: awc.org

ALPINE AN ITW COMPANY
6750 Forum Drive
Suite 305
Orlando FL, 32821

SEQN: 626554 HIPS FROM: CDM	Ply: 1 Qty: 1	**Job Number:** 21-5719 Jones/Freeman **Truss Label:** A16	Cust: R 215 JRef:1X6P2150009 T13 DrwNo: 182.21.1413.06010 / YK 07/01/2021

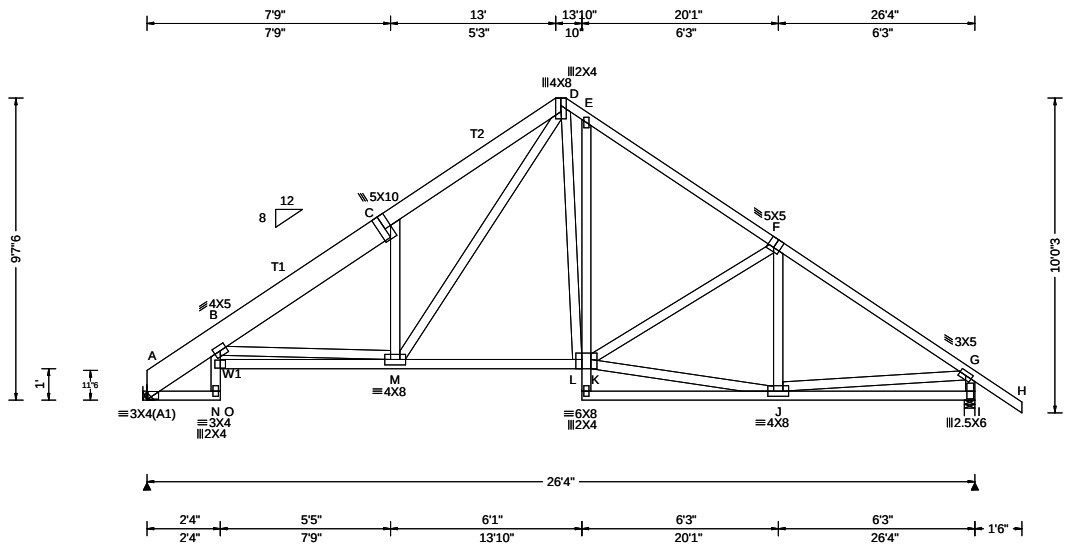

Loading Criteria (psf)

TCLL: 20.00
TCDL: 10.00
BCLL: 0.00
BCDL: 10.00
Des Ld: 40.00
NCBCLL: 10.00
Soffit: 2.00
Load Duration: 1.25
Spacing: 24.0 "

Wind Criteria

Wind Std: ASCE 7-16
Speed: 130 mph
Enclosure: Closed
Risk Category: II
EXP: C Kzt: NA
Mean Height: 15.00 ft
TCDL: 5.0 psf
BCDL: 5.0 psf
MWFRS Parallel Dist: h/2 to h
C&C Dist a: 3.00 ft
Loc. from endwall: not in 9.00 ft
GCpi: 0.18
Wind Duration: 1.60

Snow Criteria (Pg,Pf in PSF)

Pg: NA Ct: NA CAT: NA
Pf: NA Ce: NA
Lu: NA Cs: NA
Snow Duration: NA

Building Code:
FBC 7th Ed. 2020 Res.
TPI Std: 2014
Rep Fac: Yes
FT/RT:20(0)/10(0)
Plate Type(s):
WAVE

Defl/CSI Criteria

PP Deflection in	loc	L/defl	L/#
VERT(LL): 0.076	C	999	240
VERT(CL): 0.151	C	999	180
HORZ(LL): 0.063	G	-	-
HORZ(TL): 0.124	G	-	-

Creep Factor: 2.0
Max TC CSI: 0.471
Max BC CSI: 0.572
Max Web CSI: 0.831

VIEW Ver: 21.01.01A.0521.20

▲Maximum Reactions (lbs)

Loc	Gravity R+	/ R-	/ Rh	Non-Gravity / Rw	/ U	/ RL
A	1172	/-	/-	/647	/171	/275
I	1259	/-	/-	/731	/195	/-

Wind reactions based on MWFRS
A Brg Width = - Min Req = -
I Brg Width = 4.0 Min Req = 1.5
Bearing I is a rigid surface.
Members not listed have forces less than 375#

Maximum Top Chord Forces Per Ply (lbs)

Chords	Tens.	Comp.	Chords	Tens.	Comp.
A - B	213	- 956	D - E	380	- 1223
B - C	295	- 1724	E - F	302	- 1352
C - D	466	- 1845	F - G	272	- 1556

Maximum Bot Chord Forces Per Ply (lbs)

Chords	Tens.	Comp.	Chords	Tens.	Comp.
A - O	393	- 54	M - K	964	- 19
N - M	883	- 114			

Maximum Web Forces Per Ply (lbs)

Webs	Tens.	Comp.	Webs	Tens.	Comp.
B - M	607	0	K - J	1223	- 105
C - M	280	- 645	J - G	1134	- 81
M - D	874	- 248	G - I	285	- 1206
D - K	685	- 188			

Lumber

Top chord: 2x4 SP #2; T1 2x10 SP 2400f-2.0E;
T2 2x6 SP 2400f-2.0E;
Bot chord: 2x4 SP #2;
Webs: 2x4 SP #3; W1 2x4 SP #2;

Hangers / Ties

Simpson Construction Hardware is specified based on the most current information provided by Simpson Strong-Tie. Please refer to the most recent Simpson Strong-Tie catalog for additional information.

Recommended hanger connections are based on manufacturer tested capacities and calculations. Conditions may exist that require different connections than indicated. Refer to manufacturer publication for additional information.

Hanger specified assumes connection to supporting chord is located a minimum of five times the depth of the supporting chord from any unsupported end, unless unsupported chord end has 85% plating coverage.

Bearing at location x=0' uses the following support conditions: 0'
Bearing A (0', 10'1"2) HUS26
Supporting Member: (2)2x6 SP 2400f-2.0E
(14) 0.148"x3" nails into supporting member,
(4) 0.148"x3" nails into supported member.

Loading

Truss passed check for 20 psf additional bottom chord live load in areas with 42"-high x 24"-wide clearance.

Wind

Wind loads based on MWFRS with additional C&C member design.

Right end vertical not exposed to wind pressure.

Wind loading based on both gable and hip roof types.

YOONHWAK KIM
LICENSE
No. 86367
STATE OF
FLORIDA
PROFESSIONAL ENGINEER

FL REG# 278, Yoonhwak Kim, FL PE #86367
07/01/2021

****WARNING**** READ AND FOLLOW ALL NOTES ON THIS DRAWING!
****IMPORTANT**** FURNISH THIS DRAWING TO ALL CONTRACTORS INCLUDING THE INSTALLERS

Trusses require extreme care in fabricating, handling, shipping, installing and bracing. Refer to and follow the latest edition of BCSI (Building Component Safety Information, by TPI and SBCA) for safety practices prior to performing these functions. Installers shall provide temporary bracing per BCSI. Unless noted otherwise, top chord shall have properly attached structural sheathing and bottom chord shall have a properly attached rigid ceiling. Locations shown for permanent lateral restraint of webs shall have bracing installed per BCSI sections B3, B7, or B10, as applicable. Apply plates to each face of truss and position as shown above and on the Joint Details, unless noted otherwise. Refer to drawings 160A-Z for standard plate positions. Refer to job's General Notes page for additional information.

Alpine, a division of ITW Building Components Group Inc. shall not be responsible for any deviation from this drawing, any failure to build the truss in conformance with ANSI/TPI 1, or for handling, shipping, installation and bracing of trusses. A seal on this drawing or cover page listing this drawing, indicates acceptance of professional engineering responsibility solely for the design shown. The suitability and use of this drawing for any structure is the responsibility of the Building Designer per ANSI/TPI 1 Sec.2.

For more information see these web sites: Alpine: alpineitw.com; TPI: tpinst.org; SBCA: sbcindustry.com; ICC: iccsafe.org; AWC: awc.org

ALPINE
AN ITW COMPANY
6750 Forum Drive
Suite 305
Orlando FL, 32821

SEQN: 626550 HIPS FROM: CDM	Ply: 1 Qty: 1	**Job Number:** 21-5719 Jones/Freeman **Truss Label:** A17	Cust: R 215 JRef:1X6P2150009 T12 DrwNo: 182.21.1413.08057 / YK 07/01/2021

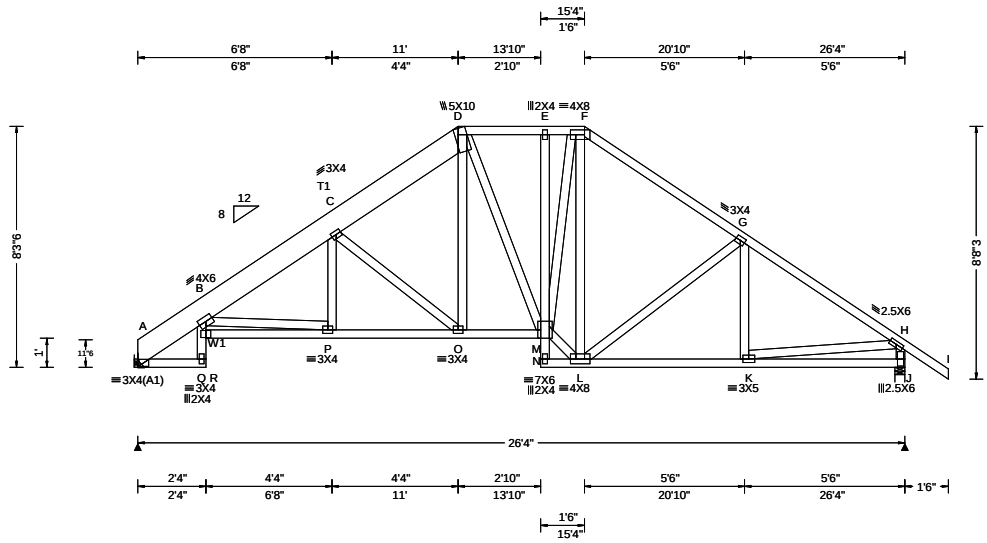

Loading Criteria (psf)

TCLL: 20.00
TCDL: 10.00
BCLL: 0.00
BCDL: 10.00
Des Ld: 40.00
NCBCLL: 10.00
Soffit: 2.00
Load Duration: 1.25
Spacing: 24.0 "

Wind Criteria

Wind Std: ASCE 7-16
Speed: 130 mph
Enclosure: Closed
Risk Category: II
EXP: C Kzt: NA
Mean Height: 15.00 ft
TCDL: 5.0 psf
BCDL: 5.0 psf
MWFRS Parallel Dist: h/2 to h
C&C Dist a: 3.00 ft
Loc. from endwall: not in 9.00 ft
GCpi: 0.18
Wind Duration: 1.60

Snow Criteria (Pg,Pf in PSF)

Pg: NA Ct: NA CAT: NA
Pf: NA Ce: NA
Lu: NA Cs: NA
Snow Duration: NA

Building Code:
FBC 7th Ed. 2020 Res.
TPI Std: 2014
Rep Fac: Yes
FT/RT:20(0)/10(0)
Plate Type(s):
WAVE

Defl/CSI Criteria

PP Deflection in	loc	L/defl	L/#
VERT(LL): 0.065	O	999	240
VERT(CL): 0.135	O	999	180
HORZ(LL): 0.063	H	-	-
HORZ(TL): 0.131	H	-	-

Creep Factor: 2.0
Max TC CSI: 0.365
Max BC CSI: 0.409
Max Web CSI: 0.733

VIEW Ver: 21.01.01A.0521.20

▲ Maximum Reactions (lbs)

Loc	Gravity R+	/ R-	/ Rh	Non-Gravity / Rw	/ U	/ RL
A	1109	/-	/-	/648	/177	/236
J	1207	/-	/-	/733	/201	/-

Wind reactions based on MWFRS
A Brg Width = - Min Req = -
J Brg Width = 4.0 Min Req = 1.5
Bearing J is a rigid surface.
Members not listed have forces less than 375#

Maximum Top Chord Forces Per Ply (lbs)

Chords	Tens.	Comp.	Chords	Tens.	Comp.
A - B	281	- 882	E - F	445	- 1051
B - C	470	- 1661	F - G	441	- 1179
C - D	483	- 1355	G - H	398	- 1471
D - E	451	- 1061			

Maximum Bot Chord Forces Per Ply (lbs)

Chords	Tens.	Comp.	Chords	Tens.	Comp.
Q - P	781	- 168	O - M	1035	- 132
P - O	1478	- 279	L - K	1149	- 223

Maximum Web Forces Per Ply (lbs)

Webs	Tens.	Comp.	Webs	Tens.	Comp.
B - P	707	- 112	M - F	854	- 169
C - O	195	- 586	L - F	86	- 524
D - O	392	- 78	K - H	1101	- 204
M - L	1207	- 145	H - J	364	- 1160

Lumber

Top chord: 2x4 SP #2; T1 2x10 SP 2400f-2.0E;
Bot chord: 2x4 SP #2;
Webs: 2x4 SP #3; W1 2x4 SP #2;

Hangers / Ties

Simpson Construction Hardware is specified based on the most current information provided by Simpson Strong-Tie. Please refer to the most recent Simpson Strong-Tie catalog for additional information.

Recommended hanger connections are based on manufacturer tested capacities and calculations. Conditions may exist that require different connections than indicated. Refer to manufacturer publication for additional information.

Hanger specified assumes connection to supporting chord is located a minimum of five times the depth of the supporting chord from any unsupported end, unless unsupported chord end has 85% plating coverage.

Bearing at location x=0' uses the following support conditions: 0'
Bearing A (0', 10'1"2) LUS26
Supporting Member: (2)2x6 SP 2400f-2.0E
(4) 0.148"x3" nails into supporting member,
(4) 0.148"x3" nails into supported member.

Wind

Wind loads based on MWFRS with additional C&C member design.

Right end vertical not exposed to wind pressure.

Wind loading based on both gable and hip roof types.

YOONHWAK KIM
LICENSE
No. 86367
STATE OF
FLORIDA
PROFESSIONAL ENGINEER

FL REG# 278, Yoonhwak Kim, FL PE #86367
07/01/2021

****WARNING**** READ AND FOLLOW ALL NOTES ON THIS DRAWING!
****IMPORTANT**** FURNISH THIS DRAWING TO ALL CONTRACTORS INCLUDING THE INSTALLERS

Trusses require extreme care in fabricating, handling, shipping, installing and bracing. Refer to and follow the latest edition of BCSI (Building Component Safety Information, by TPI and SBCA) for safety practices prior to performing these functions. Installers shall provide temporary bracing per BCSI. Unless noted otherwise, top chord shall have properly attached structural sheathing and bottom chord shall have a properly attached rigid ceiling. Locations shown for permanent lateral restraint of webs shall have bracing installed per BCSI sections B3, B7, or B10, as applicable. Apply plates to each face of truss and position as shown above and on the Joint Details, unless noted otherwise. Refer to drawings 160A-Z for standard plate positions. Refer to job's General Notes page for additional information.

Alpine, a division of ITW Building Components Group Inc. shall not be responsible for any deviation from this drawing, any failure to build the truss in conformance with ANSI/TPI 1, or for handling, shipping, installation and bracing of trusses. A seal on this drawing or cover page listing this drawing, indicates acceptance of professional engineering responsibility solely for the design shown. The suitability and use of this drawing for any structure is the responsibility of the Building Designer per ANSI/TPI 1 Sec.2.

For more information see these web sites: Alpine: alpineitw.com; TPI: tpinst.org; SBCA: sbcindustry.com; ICC: iccsafe.org; AWC: awc.org

ALPINE
AN ITW COMPANY
6750 Forum Drive
Suite 305
Orlando FL, 32821

SEQN: 626546 HIPS FROM: CDM	Ply: 1 Qty: 1	**Job Number:** 21-5719 Jones/Freeman **Truss Label:** A18	Cust: R 215 JRef:1X6P2150009 T15 DrwNo: 182.21.1413.10643 / YK 07/01/2021

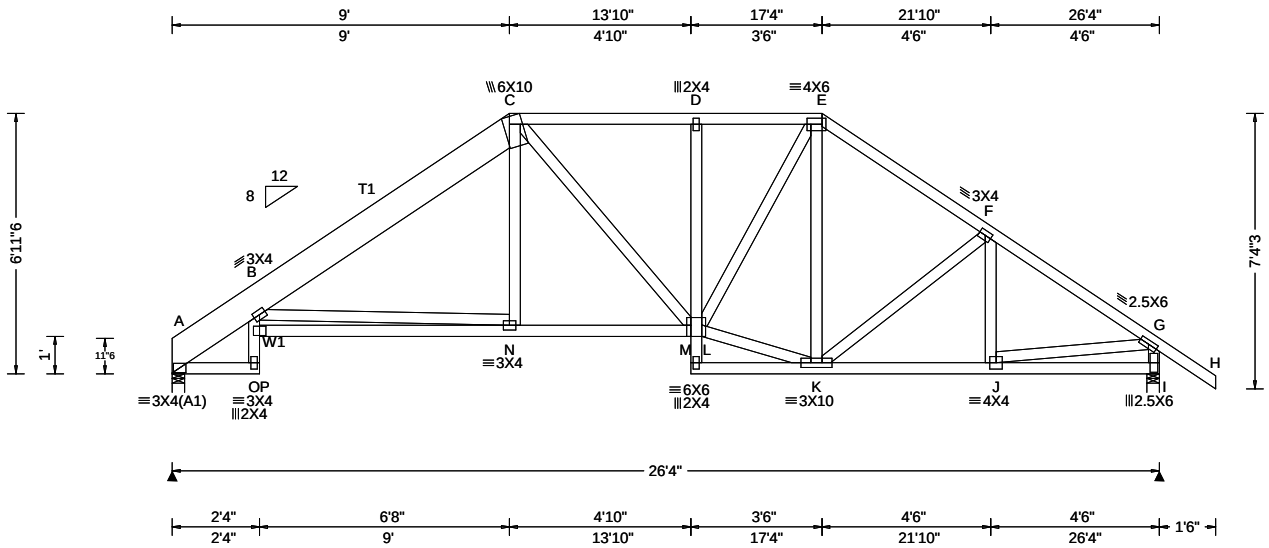

Loading Criteria (psf)	**Wind Criteria**	**Snow Criteria** (Pg,Pf in PSF)	**Defl/CSI Criteria**
TCLL: 20.00 TCDL: 10.00 BCLL: 0.00 BCDL: 10.00 Des Ld: 40.00 NCBCLL: 10.00 Soffit: 2.00 Load Duration: 1.25 Spacing: 24.0 "	Wind Std: ASCE 7-16 Speed: 130 mph Enclosure: Closed Risk Category: II EXP: C Kzt: NA Mean Height: 15.00 ft TCDL: 5.0 psf BCDL: 5.0 psf MWFRS Parallel Dist: h/2 to h C&C Dist a: 3.00 ft Loc. from endwall: not in 9.00 ft GCpi: 0.18 Wind Duration: 1.60	Pg: NA Ct: NA CAT: NA Pf: NA Ce: NA Lu: NA Cs: NA Snow Duration: NA Building Code: FBC 7th Ed. 2020 Res. TPI Std: 2014 Rep Fac: Yes FT/RT:20(0)/10(0) Plate Type(s): WAVE	PP Deflection in loc L/defl L/# VERT(LL): 0.064 N 999 240 VERT(CL): 0.134 N 999 180 HORZ(LL): 0.062 I - - HORZ(TL): 0.129 I - - Creep Factor: 2.0 Max TC CSI: 0.290 Max BC CSI: 0.544 Max Web CSI: 0.840 VIEW Ver: 21.01.01A.0521.20

▲Maximum Reactions (lbs)

	Gravity			Non-Gravity		
Loc	R+	/ R-	/ Rh	/ Rw	/ U	/ RL
A	1110	/-	/-	/643	/181	/199
I	1207	/-	/-	/727	/205	/-

Wind reactions based on MWFRS
A Brg Width = 4.0 Min Req = 1.5
I Brg Width = 4.0 Min Req = 1.5
Bearings A & I are a rigid surface.
Members not listed have forces less than 375#

Maximum Top Chord Forces Per Ply (lbs)

Chords	Tens.	Comp.	Chords	Tens.	Comp.
A - B	362	- 919	D - E	646	- 1311
B - C	569	- 1475	E - F	561	- 1267
C - D	652	- 1319	F - G	500	- 1454

Maximum Bot Chord Forces Per Ply (lbs)

Chords	Tens.	Comp.	Chords	Tens.	Comp.
A - P	391	- 126	N - L	1213	- 314
O - N	893	- 268	K - J	1148	- 322

Maximum Web Forces Per Ply (lbs)

Webs	Tens.	Comp.	Webs	Tens.	Comp.
L - K	1021	- 262	J - G	1124	- 310
L - E	633	- 287	G - I	434	- 1167

Lumber

Top chord: 2x4 SP #2; T1 2x10 SP 2400f-2.0E;
Bot chord: 2x4 SP #2;
Webs: 2x4 SP #3; W1 2x4 SP #2;

Wind

Wind loads based on MWFRS with additional C&C member design.

Right end vertical not exposed to wind pressure.

Wind loading based on both gable and hip roof types.

YOONHWAK KIM
LICENSE
No. 86367
STATE OF
FLORIDA
PROFESSIONAL ENGINEER

FL REG# 278, Yoonhwak Kim, FL PE #86367
07/01/2021

****WARNING**** READ AND FOLLOW ALL NOTES ON THIS DRAWING!
****IMPORTANT**** FURNISH THIS DRAWING TO ALL CONTRACTORS INCLUDING THE INSTALLERS

Trusses require extreme care in fabricating, handling, shipping, installing and bracing. Refer to and follow the latest edition of BCSI (Building Component Safety Information, by TPI and SBCA) for safety practices prior to performing these functions. Installers shall provide temporary bracing per BCSI. Unless noted otherwise, top chord shall have properly attached structural sheathing and bottom chord shall have a properly attached rigid ceiling. Locations shown for permanent lateral restraint of webs shall have bracing installed per BCSI sections B3, B7, or B10, as applicable. Apply plates to each face of truss and position as shown above and on the Joint Details, unless noted otherwise. Refer to drawings 160A-Z for standard plate positions. Refer to job's General Notes page for additional information.

Alpine, a division of ITW Building Components Group Inc. shall not be responsible for any deviation from this drawing, any failure to build the truss in conformance with ANSI/TPI 1, or for handling, shipping, installation and bracing of trusses. A seal on this drawing or cover page listing this drawing, indicates acceptance of professional engineering responsibility solely for the design shown. The suitability and use of this drawing for any structure is the responsibility of the Building Designer per ANSI/TPI 1 Sec.2.

For more information see these web sites: Alpine: alpineitw.com; TPI: tpinst.org; SBCA: sbcindustry.com; ICC: iccsafe.org; AWC: awc.org

ALPINE
AN ITW COMPANY
6750 Forum Drive
Suite 305
Orlando FL, 32821

SEQN: 626998 HIPS FROM: CDM	Ply: 1 Qty: 1	**Job Number:** 21-5719 Jones/Freeman **Truss Label:** A19	Cust: R 215 JRef:1X6P2150009 T26 DrwNo: 182.21.1413.15880 / YK 07/01/2021

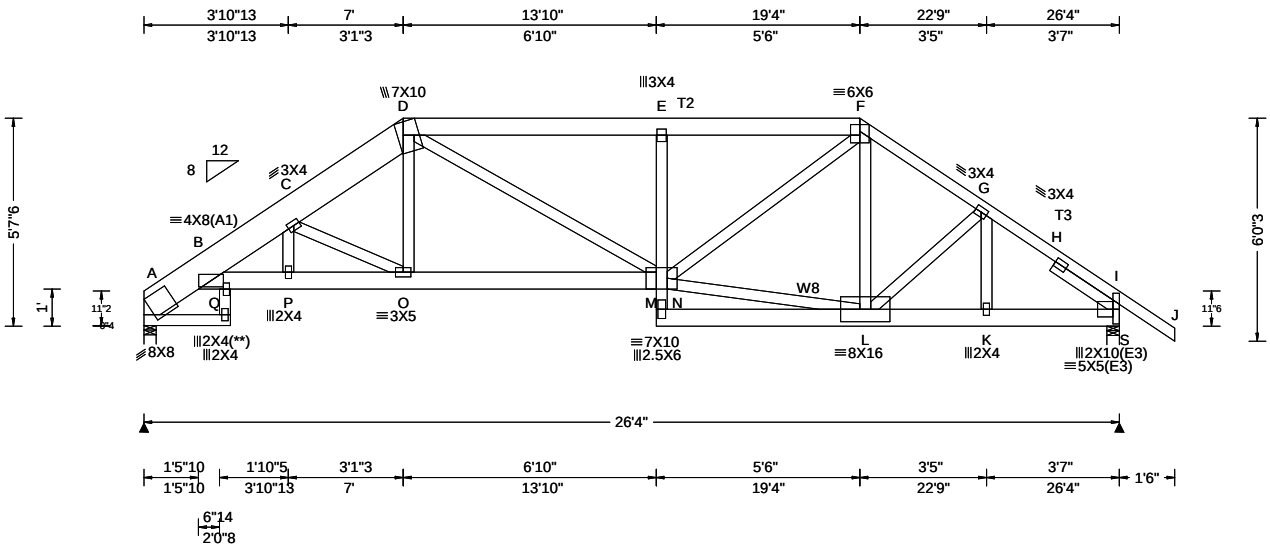

Loading Criteria (psf)

TCLL: 20.00
TCDL: 10.00
BCLL: 0.00
BCDL: 10.00
Des Ld: 40.00
NCBCLL: 10.00
Soffit: 2.00
Load Duration: 1.25
Spacing: 24.0 "

Wind Criteria

Wind Std: ASCE 7-16
Speed: 130 mph
Enclosure: Closed
Risk Category: II
EXP: C Kzt: NA
Mean Height: 15.00 ft
TCDL: 5.0 psf
BCDL: 5.0 psf
MWFRS Parallel Dist: 0 to h/2
C&C Dist a: 3.00 ft
Loc. from endwall: not in 4.50 ft
GCpi: 0.18
Wind Duration: 1.60

Snow Criteria (Pg,Pf in PSF)

Pg: NA Ct: NA CAT: NA
Pf: NA Ce: NA
Lu: NA Cs: NA
Snow Duration: NA

Building Code:
FBC 7th Ed. 2020 Res.
TPI Std: 2014
Rep Fac: Varies by Ld Case
FT/RT:20(0)/10(0)
Plate Type(s):
WAVE

Defl/CSI Criteria

PP Deflection in	loc	L/defl	L/#
VERT(LL): 0.152	E	999	240
VERT(CL): 0.306	E	999	180
HORZ(LL): 0.106	K	-	-
HORZ(TL): 0.214	K	-	-

Creep Factor: 2.0
Max TC CSI: 0.489
Max BC CSI: 0.358
Max Web CSI: 0.975

VIEW Ver: 21.01.01A.0521.20

▲ Maximum Reactions (lbs)

Loc	Gravity R+	/ R-	/ Rh	Non-Gravity / Rw	/ U	/ RL
A	2590	/-	/-	/-	/554	/-
S	2756	/-	/-	/-	/371	/-

Wind reactions based on MWFRS
A Brg Width = 4.0 Min Req = 3.1
S Brg Width = 4.0 Min Req = 2.3
Bearings A & S are a rigid surface.
Members not listed have forces less than 375#

Maximum Top Chord Forces Per Ply (lbs)

Chords	Tens.	Comp.	Chords	Tens.	Comp.
A - B	392	-1823	E - F	933	-5277
B - C	1056	-4936	F - G	475	-3901
C - D	1031	-4863	G - H	462	-3701
D - E	941	-5309	H - I	485	-3768

Maximum Bot Chord Forces Per Ply (lbs)

Chords	Tens.	Comp.	Chords	Tens.	Comp.
B - Q	4435	-942	O - M	4070	-868
Q - P	4461	-950	L - K	2959	-368
P - O	4448	-947	K - I	2964	-369

Maximum Web Forces Per Ply (lbs)

Webs	Tens.	Comp.	Webs	Tens.	Comp.
C - O	90	-443	M - F	2559	-686
D - O	927	-36	M - L	3188	-368
D - M	1410	-76	L - G	437	-14
E - M	444	-1032			

Lumber

Top chord: 2x10 SP 2400f-2.0E;
T2 2x6 SP 2400f-2.0E; T3 2x4 SP #2;
Bot chord: 2x6 SP 2400f-2.0E;
Webs: 2x4 SP #3; W8 2x4 SP #2;
Rt Slider: 2x4 SP #3; block length = 2.142'

Blocking

Blocking reinforcement required to prevent buckling of members over the bearings:
Bearing 2 located at 26.0' (blocking >= 3.50" if used)

Special Loads

------(Lumber Dur.Fac.=1.25 / Plate Dur.Fac.=1.25)

TC: From	64 plf at	0.00 to	64 plf at	7.00	
TC: From	32 plf at	7.00 to	32 plf at	19.33	
TC: From	64 plf at	19.33 to	64 plf at	27.83	
BC: From	20 plf at	1.47 to	20 plf at	7.03	
BC: From	10 plf at	7.03 to	10 plf at	19.30	
BC: From	20 plf at	19.30 to	20 plf at	26.33	
BC: From	5 plf at	26.33 to	5 plf at	27.83	

TC: 398 lb Conc. Load at 7.03
TC: 214 lb Conc. Load at 9.06,11.06,13.06,13.77 15.27,17.27
TC: 314 lb Conc. Load at 19.30
BC: 368 lb Conc. Load at 7.03
BC: 108 lb Conc. Load at 9.06,11.06,13.06,13.77
BC: 140 lb Conc. Load at 15.27,17.27
BC: 520 lb Conc. Load at 19.30

Plating Notes

(**) 1 plate(s) require special positioning. Refer to scaled plate plot details for special positioning requirements.

Wind

Wind loads and reactions based on MWFRS.

Wind loading based on both gable and hip roof types.

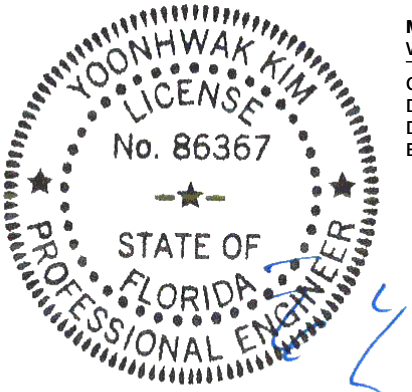

FL REG# 278, Yoonhwak Kim, FL PE #86367
07/01/2021

****WARNING**** READ AND FOLLOW ALL NOTES ON THIS DRAWING!
****IMPORTANT**** FURNISH THIS DRAWING TO ALL CONTRACTORS INCLUDING THE INSTALLERS

Trusses require extreme care in fabricating, handling, shipping, installing and bracing. Refer to and follow the latest edition of BCSI (Building Component Safety Information, by TPI and SBCA) for safety practices prior to performing these functions. Installers shall provide temporary bracing per BCSI. Unless noted otherwise, top chord shall have properly attached structural sheathing and bottom chord shall have a properly attached rigid ceiling. Locations shown for permanent lateral restraint of webs shall have bracing installed per BCSI sections B3, B7, or B10, as applicable. Apply plates to each face of truss and position as shown above and on the Joint Details, unless noted otherwise. Refer to drawings 160A-Z for standard plate positions. Refer to job's General Notes page for additional information.

Alpine, a division of ITW Building Components Group Inc. shall not be responsible for any deviation from this drawing, any failure to build the truss in conformance with ANSI/TPI 1, or for handling, shipping, installation and bracing of trusses. A seal on this drawing or cover page listing this drawing, indicates acceptance of professional engineering responsibility solely for the design shown. The suitability and use of this drawing for any structure is the responsibility of the Building Designer per ANSI/TPI 1 Sec.2.

For more information see these web sites: Alpine: alpineitw.com; TPI: tpinst.org; SBCA: sbcindustry.com; ICC: iccsafe.org; AWC: awc.org

ALPINE AN ITW COMPANY
6750 Forum Drive
Suite 305
Orlando FL, 32821

SEQN: 626642 GABL FROM: CDM	Ply: 1 Qty: 1	**Job Number:** 21-5719 Jones/Freeman **Truss Label:** B01	Cust: R 215 JRef:1X6P2150009 T8 DrwNo: 182.21.1413.19050 / YK 07/01/2021

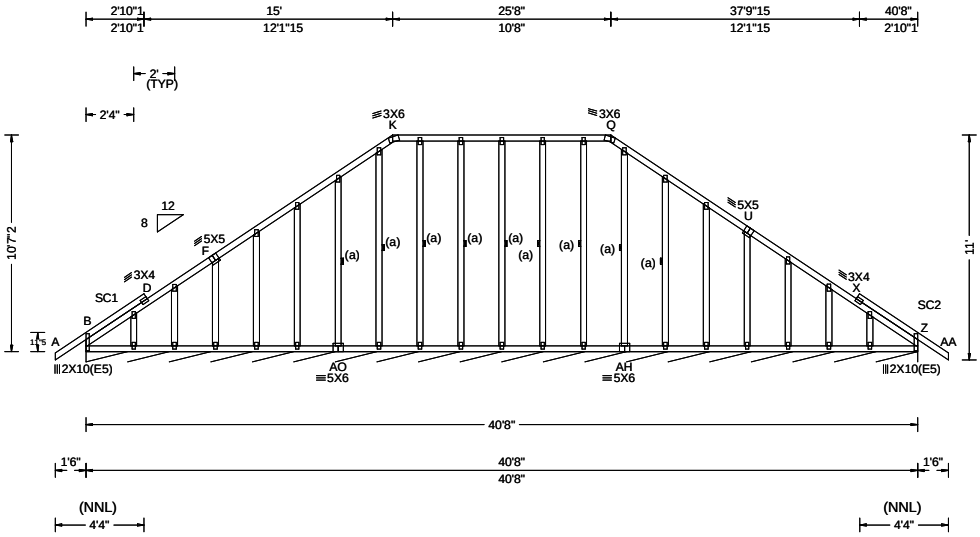

Loading Criteria (psf)

TCLL: 20.00
TCDL: 10.00
BCLL: 0.00
BCDL: 10.00
Des Ld: 40.00
NCBCLL: 10.00
Soffit: 2.00
Load Duration: 1.25
Spacing: 24.0 "

Wind Criteria

Wind Std: ASCE 7-16
Speed: 130 mph
Enclosure: Closed
Risk Category: II
EXP: C Kzt: NA
Mean Height: 17.14 ft
TCDL: 5.0 psf
BCDL: 5.0 psf
MWFRS Parallel Dist: 0 to h/2
C&C Dist a: 4.07 ft
Loc. from endwall: Any
GCpi: 0.18
Wind Duration: 1.60

Snow Criteria (Pg,Pf in PSF)

Pg: NA Ct: NA CAT: NA
Pf: NA Ce: NA
Lu: NA Cs: NA
Snow Duration: NA

Building Code:
FBC 7th Ed. 2020 Res.
TPI Std: 2014
Rep Fac: Yes
FT/RT:20(0)/10(0)
Plate Type(s):
WAVE

Defl/CSI Criteria

PP Deflection in	loc	L/defl	L/#
VERT(LL): 0.002	Q	999	240
VERT(CL): 0.004	X	999	180
HORZ(LL): -0.003	L	-	-
HORZ(TL): 0.005	M	-	-

Creep Factor: 2.0
Max TC CSI: 0.195
Max BC CSI: 0.041
Max Web CSI: 0.130

VIEW Ver: 21.01.01A.0521.20

▲ Maximum Reactions (lbs), or *=PLF

	Gravity			Non-Gravity		
Loc	R+	/ R-	/ Rh	/ Rw	/ U	/ RL
Z*	89	/-	/-	/49	/-	/5

Wind reactions based on MWFRS
Z Brg Width = 488 Min Req = -
Bearing B is a rigid surface.
Members not listed have forces less than 375#

Lumber

Top chord: 2x4 SP #2;
Bot chord: 2x4 SP #2;
Webs: 2x4 SP #3;
Stack Chord: SC1 2x4 SP #2;
Stack Chord: SC2 2x4 SP #2;

Bracing

(a) Continuous lateral restraint equally spaced on member.

Plating Notes

All plates are 2X4 except as noted.

Wind

Wind loads based on MWFRS with additional C&C member design.

End verticals not exposed to wind pressure.

Wind loading based on both gable and hip roof types.

Additional Notes

See DWGS A14030ENC160118 & GBLLETIN0118 for gable wind bracing and other requirements.

Stacked top chord must NOT be notched or cut in area (NNL). Dropped top chord braced at 24" oc intervals. Attach stacked top chord (SC) to dropped top chord in notchable area using 3x4 tie-plates 24" oc. Center plate on stacked/dropped chord interface, plate length perpendicular to chord length. Splice top chord in notchable area using 3x6.

Refer to DWG PB160160118 for piggyback details.

YOONHWAK KIM
LICENSE
No. 86367
STATE OF
FLORIDA
PROFESSIONAL ENGINEER

FL REG# 278, Yoonhwak Kim, FL PE #86367
07/01/2021

****WARNING**** READ AND FOLLOW ALL NOTES ON THIS DRAWING!
****IMPORTANT**** FURNISH THIS DRAWING TO ALL CONTRACTORS INCLUDING THE INSTALLERS

Trusses require extreme care in fabricating, handling, shipping, installing and bracing. Refer to and follow the latest edition of BCSI (Building Component Safety Information, by TPI and SBCA) for safety practices prior to performing these functions. Installers shall provide temporary bracing per BCSI. Unless noted otherwise, top chord shall have properly attached structural sheathing and bottom chord shall have a properly attached rigid ceiling. Locations shown for permanent lateral restraint of webs shall have bracing installed per BCSI sections B3, B7, or B10, as applicable. Apply plates to each face of truss and position as shown above and on the Joint Details, unless noted otherwise. Refer to drawings 160A-Z for standard plate positions. Refer to job's General Notes page for additional information.

Alpine, a division of ITW Building Components Group Inc. shall not be responsible for any deviation from this drawing, any failure to build the truss in conformance with ANSI/TPI 1, or for handling, shipping, installation and bracing of trusses. A seal on this drawing or cover page listing this drawing, indicates acceptance of professional engineering responsibility solely for the design shown. The suitability and use of this drawing for any structure is the responsibility of the Building Designer per ANSI/TPI 1 Sec.2.

For more information see these web sites: Alpine: alpineitw.com; TPI: tpinst.org; SBCA: sbcindustry.com; ICC: iccsafe.org; AWC: awc.org

ALPINE
AN ITW COMPANY
6750 Forum Drive
Suite 305
Orlando FL, 32821

SEQN: 626639 COMN FROM: CDM	Ply: 1 Qty: 5	**Job Number:** 21-5719 Jones/Freeman **Truss Label:** B02	Cust: R 215 JRef:1X6P2150009 T51 DrwNo: 182.21.1413.21187 / YK 07/01/2021

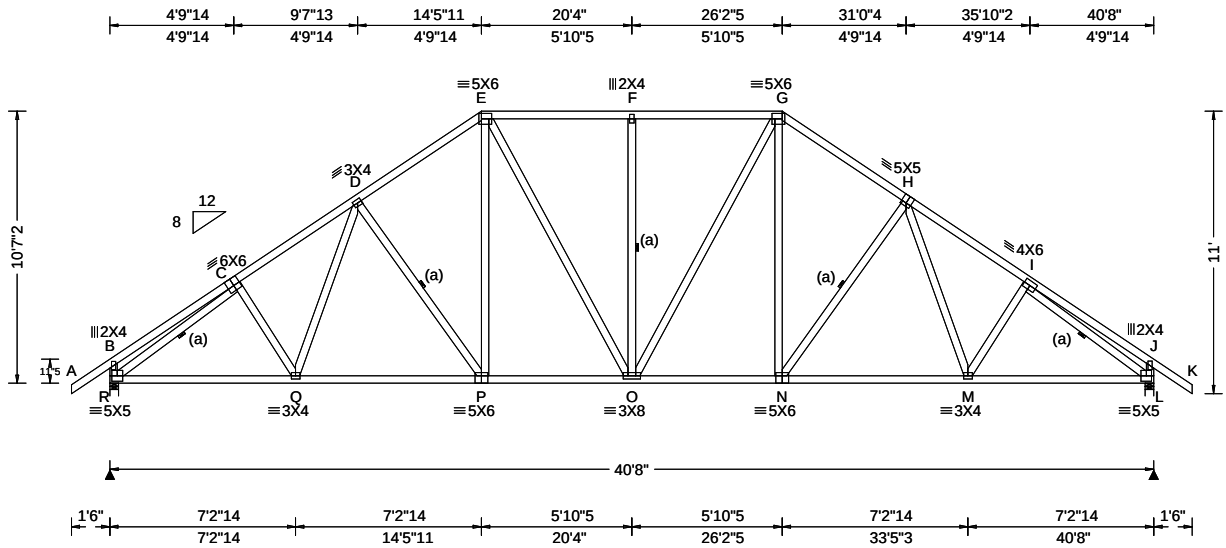

Loading Criteria (psf)

TCLL: 20.00
TCDL: 10.00
BCLL: 0.00
BCDL: 10.00
Des Ld: 40.00
NCBCLL: 10.00
Soffit: 2.00
Load Duration: 1.25
Spacing: 24.0 "

Wind Criteria

Wind Std: ASCE 7-16
Speed: 130 mph
Enclosure: Closed
Risk Category: II
EXP: C Kzt: NA
Mean Height: 17.32 ft
TCDL: 5.0 psf
BCDL: 5.0 psf
MWFRS Parallel Dist: 0 to h/2
C&C Dist a: 4.07 ft
Loc. from endwall: Any
GCpi: 0.18
Wind Duration: 1.60

Snow Criteria (Pg,Pf in PSF)

Pg: NA Ct: NA CAT: NA
Pf: NA Ce: NA
Lu: NA Cs: NA
Snow Duration: NA

Building Code:
FBC 7th Ed. 2020 Res.
TPI Std: 2014
Rep Fac: Yes
FT/RT:20(0)/10(0)
Plate Type(s):
WAVE

Defl/CSI Criteria

PP Deflection in	loc	L/defl	L/#
VERT(LL): 0.147	F	999	240
VERT(CL): 0.268	F	999	180
HORZ(LL): 0.084	J	-	-
HORZ(TL): 0.153	J	-	-

Creep Factor: 2.0
Max TC CSI: 0.413
Max BC CSI: 0.830
Max Web CSI: 0.678

VIEW Ver: 21.01.01A.0521.20

▲Maximum Reactions (lbs)

Loc	Gravity R+	/ R-	/ Rh	Non-Gravity / Rw	/ U	/ RL
R	2071	/-	/-	/1115	/104	/341
L	2071	/-	/-	/1115	/104	/-

Wind reactions based on MWFRS
R Brg Width = 4.0 Min Req = 2.4
L Brg Width = 4.0 Min Req = 2.4
Bearings R & L are a rigid surface.
Members not listed have forces less than 375#

Maximum Top Chord Forces Per Ply (lbs)

Chords	Tens.	Comp.	Chords	Tens.	Comp.
C - D	332	- 2737	F - G	243	- 2046
D - E	284	- 2353	G - H	284	- 2351
E - F	243	- 2046	H - I	333	- 2736

Maximum Bot Chord Forces Per Ply (lbs)

Chords	Tens.	Comp.	Chords	Tens.	Comp.
R - Q	2217	- 112	O - N	1883	0
Q - P	2127	0	N - M	2125	0
P - O	1884	0	M - L	2217	- 119

Maximum Web Forces Per Ply (lbs)

Webs	Tens.	Comp.	Webs	Tens.	Comp.
R - C	149	- 2712	G - N	634	- 176
D - P	294	- 424	N - H	293	- 422
E - P	635	- 177	I - L	151	- 2713
F - O	0	- 386			

Lumber

Top chord: 2x4 SP #2;
Bot chord: 2x4 SP #2;
Webs: 2x4 SP #3;

Bracing

(a) Continuous lateral restraint equally spaced on member.

Loading

Truss passed check for 20 psf additional bottom chord live load in areas with 42"-high x 24"-wide clearance.

Wind

Wind loads based on MWFRS with additional C&C member design.

End verticals not exposed to wind pressure.

Wind loading based on both gable and hip roof types.

Additional Notes

Refer to DWG PB160160118 for piggyback details.

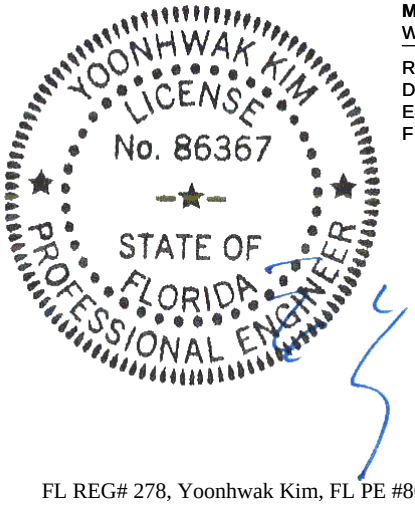

FL REG# 278, Yoonhwak Kim, FL PE #86367
07/01/2021

****WARNING**** READ AND FOLLOW ALL NOTES ON THIS DRAWING!
****IMPORTANT**** FURNISH THIS DRAWING TO ALL CONTRACTORS INCLUDING THE INSTALLERS

Trusses require extreme care in fabricating, handling, shipping, installing and bracing. Refer to and follow the latest edition of BCSI (Building Component Safety Information, by TPI and SBCA) for safety practices prior to performing these functions. Installers shall provide temporary bracing per BCSI. Unless noted otherwise, top chord shall have properly attached structural sheathing and bottom chord shall have a properly attached rigid ceiling. Locations shown for permanent lateral restraint of webs shall have bracing installed per BCSI sections B3, B7, or B10, as applicable. Apply plates to each face of truss and position as shown above and on the Joint Details, unless noted otherwise. Refer to drawings 160A-Z for standard plate positions. Refer to job's General Notes page for additional information.

Alpine, a division of ITW Building Components Group Inc. shall not be responsible for any deviation from this drawing, any failure to build the truss in conformance with ANSI/TPI 1, or for handling, shipping, installation and bracing of trusses. A seal on this drawing or cover page listing this drawing, indicates acceptance of professional engineering responsibility solely for the design shown. The suitability and use of this drawing for any structure is the responsibility of the Building Designer per ANSI/TPI 1 Sec.2.

For more information see these web sites: Alpine: alpineitw.com; TPI: tpinst.org; SBCA: sbcindustry.com; ICC: iccsafe.org; AWC: awc.org

ALPINE AN ITW COMPANY
6750 Forum Drive
Suite 305
Orlando FL, 32821

SEQN: 626657 GABL FROM: CDM	Ply: 1 Qty: 1	**Job Number:** 21-5719 Jones/Freeman **Truss Label:** B03	Cust: R 215 JRef:1X6P2150009 T6 DrwNo: 182.21.1413.23617 / YK 07/01/2021

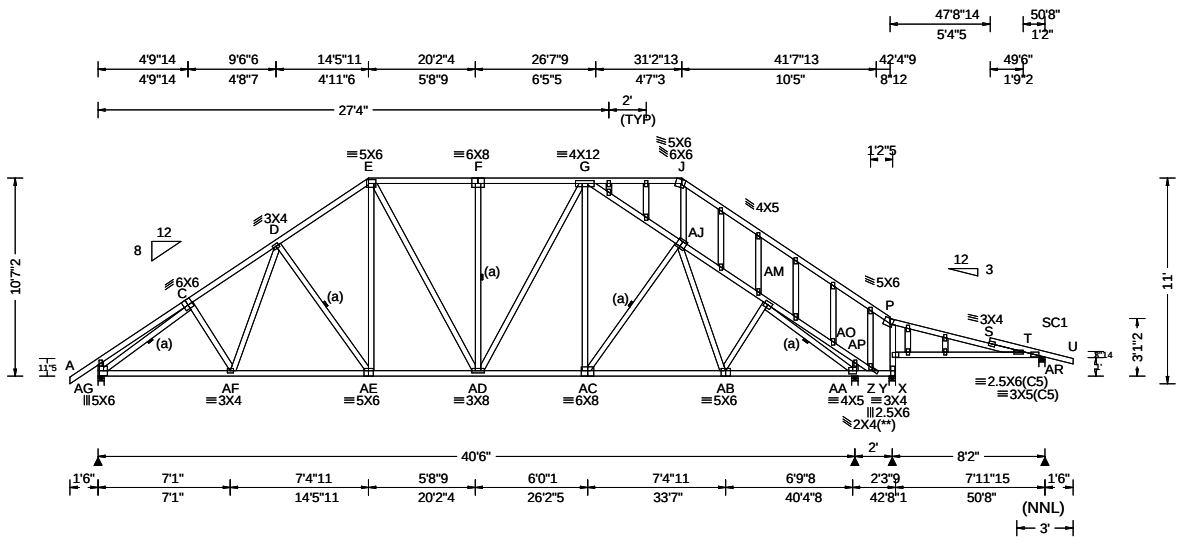

Loading Criteria (psf)	Wind Criteria	Snow Criteria (Pg,Pf in PSF)	Defl/CSI Criteria
TCLL: 20.00 TCDL: 10.00 BCLL: 0.00 BCDL: 10.00 Des Ld: 40.00 NCBCLL: 10.00 Soffit: 2.00 Load Duration: 1.25 Spacing: 24.0 "	Wind Std: ASCE 7-16 Speed: 130 mph Enclosure: Closed Risk Category: II EXP: C Kzt: NA Mean Height: 15.36 ft TCDL: 5.0 psf BCDL: 5.0 psf MWFRS Parallel Dist: h/2 to h C&C Dist a: 5.07 ft Loc. from endwall: not in 6.50 ft GCpi: 0.18 Wind Duration: 1.60	Pg: NA Ct: NA CAT: NA Pf: NA Ce: NA Lu: NA Cs: NA Snow Duration: NA Building Code: FBC 7th Ed. 2020 Res. TPI Std: 2014 Rep Fac: Yes FT/RT:20(0)/10(0) Plate Type(s): WAVE	PP Deflection in loc L/defl L/# VERT(LL): 0.155 S 609 240 VERT(CL): 0.278 S 338 180 HORZ(LL): 0.098 O - - HORZ(TL): 0.181 O - - Creep Factor: 2.0 Max TC CSI: 0.648 Max BC CSI: 0.854 Max Web CSI: 0.659 VIEW Ver: 21.01.01A.0521.20

▲ Maximum Reactions (lbs)

Loc	Gravity R+	/ R-	/ Rh	Non-Gravity / Rw	/ U	/ RL
AG	2042	/-	/-	/1120	/310	/312
AA	1914	/-	/-	/958	/327	/-
Y	572	/-	/-	/284	/-	/-
AR	420	/-	/-	/224	/51	/-

Wind reactions based on MWFRS
AG Brg Width = 4.0 Min Req = 2.4
AA Brg Width = 4.0 Min Req = 1.9
Y Brg Width = 4.0 Min Req = 1.5
AR Brg Width = 4.0 Min Req = 1.5
Bearings AG, AA, Y, & AR are a rigid surface.
Members not listed have forces less than 375#

Maximum Top Chord Forces Per Ply (lbs)

Chords	Tens.	Comp.	Chords	Tens.	Comp.
C - D	720	- 2691	F - G	731	- 1989
D - E	738	- 2306	S - T	482	- 499
E - F	732	- 1990			

Maximum Bot Chord Forces Per Ply (lbs)

Chords	Tens.	Comp.	Chords	Tens.	Comp.
AG-AF	2180	- 496	AD-AC	1834	- 381
AF-AE	2091	- 427	AC-AB	2040	- 389
AE-AD	1843	- 321	AB-AA	2076	- 436

Maximum Web Forces Per Ply (lbs)

Webs	Tens.	Comp.	Webs	Tens.	Comp.
AG- C	506	- 2637	AJ-AM	524	- 2613
D -AE	182	- 423	AM-AA	576	- 2352
E -AE	636	- 83	AO-AP	77	- 385
G -AC	585	0	P - X	235	- 472
G -AJ	477	- 2226	X - Y	272	- 561

Lumber

Top chord: 2x4 SP #2;
Bot chord: 2x4 SP #2;
Webs: 2x4 SP #3;
Stack Chord: SC1 2x4 SP #2;

Bracing

(a) Continuous lateral restraint equally spaced on member.

Plating Notes

All plates are 2X4 except as noted.

(**) 1 plate(s) require special positioning. Refer to scaled plate plot details for special positioning requirements.

Loading

Gable end supports 8" max rake overhang. Top chord must not be cut or notched.

Truss passed check for 20 psf additional bottom chord live load in areas with 42"-high x 24"-wide clearance.

Purlins

In lieu of structural panels use purlins to brace all sloping TC @ 24" oc; all flat TC @ 0" oc.

Wind

Wind loads based on MWFRS with additional C&C member design.

Left end vertical not exposed to wind pressure.

Wind loading based on both gable and hip roof types.

Additional Notes

See DWGS A14030ENC160118 & GBLLETIN0118 for gable wind bracing and other requirements.

Stacked top chord must NOT be notched or cut in area (NNL). Dropped top chord braced at 24" oc intervals. Attach stacked top chord (SC) to dropped top chord in notchable area using 3x4 tie-plates 24" oc. Center plate on stacked/dropped chord interface, plate length perpendicular to chord length. Splice top chord in notchable area using 3x6.

WARNING: Furnish a copy of this DWG to the installation contractor. Special care must be taken during handling, shipping and installation of trusses. See "WARNING" note below.

YOONHWAK KIM LICENSE No. 86367 STATE OF FLORIDA PROFESSIONAL ENGINEER

FL REG# 278, Yoonhwak Kim, FL PE #86367
07/01/2021

****WARNING**** READ AND FOLLOW ALL NOTES ON THIS DRAWING!
****IMPORTANT**** FURNISH THIS DRAWING TO ALL CONTRACTORS INCLUDING THE INSTALLERS

Trusses require extreme care in fabricating, handling, shipping, installing and bracing. Refer to and follow the latest edition of BCSI (Building Component Safety Information, by TPI and SBCA) for safety practices prior to performing these functions. Installers shall provide temporary bracing per BCSI. Unless noted otherwise, top chord shall have properly attached structural sheathing and bottom chord shall have a properly attached rigid ceiling. Locations shown for permanent lateral restraint of webs shall have bracing installed per BCSI sections B3, B7, or B10, as applicable. Apply plates to each face of truss and position as shown above and on the Joint Details, unless noted otherwise. Refer to drawings 160A-Z for standard plate positions. Refer to job's General Notes page for additional information.

Alpine, a division of ITW Building Components Group Inc. shall not be responsible for any deviation from this drawing, any failure to build the truss in conformance with ANSI/TPI 1, or for handling, shipping, installation and bracing of trusses. A seal on this drawing or cover page listing this drawing, indicates acceptance of professional engineering responsibility solely for the design shown. The suitability and use of this drawing for any structure is the responsibility of the Building Designer per ANSI/TPI 1 Sec.2.

For more information see these web sites: Alpine: alpineitw.com; TPI: tpinst.org; SBCA: sbcindustry.com; ICC: iccsafe.org; AWC: awc.org

ALPINE AN ITW COMPANY
6750 Forum Drive
Suite 305
Orlando FL, 32821

SEQN: 626647 COMN FROM: CDM	Ply: 1 Qty: 1	**Job Number:** 21-5719 Jones/Freeman **Truss Label:** B04	Cust: R 215 JRef:1X6P2150009 T17 DrwNo: 182.21.1413.26123 / YK 07/01/2021

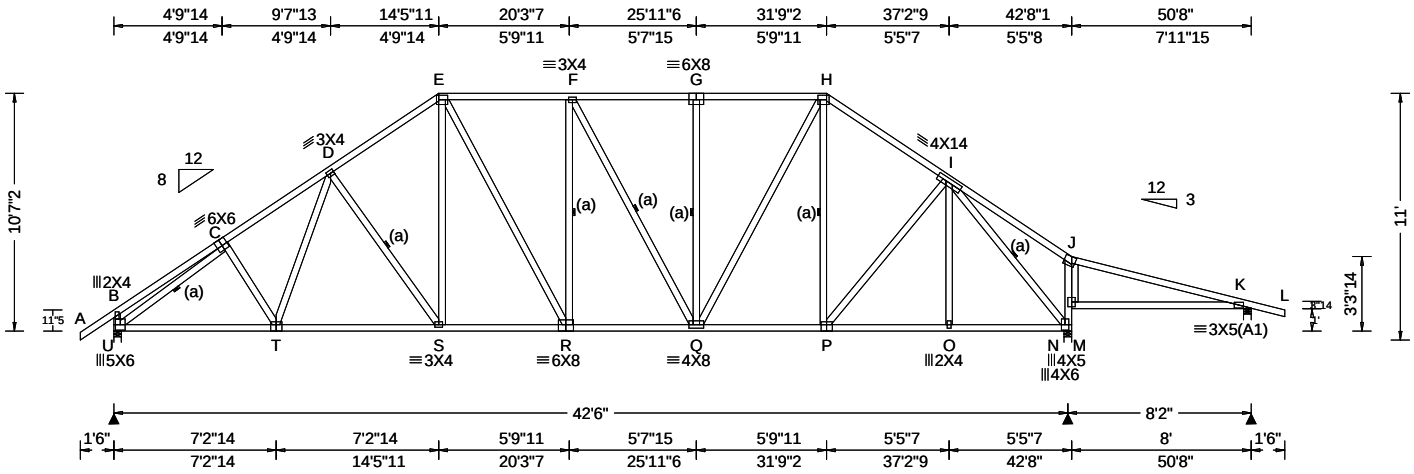

Loading Criteria (psf)	
TCLL:	20.00
TCDL:	10.00
BCLL:	0.00
BCDL:	10.00
Des Ld:	40.00
NCBCLL:	10.00
Soffit:	2.00

Load Duration: 1.25
Spacing: 24.0 "

Wind Criteria
Wind Std: ASCE 7-16
Speed: 130 mph
Enclosure: Closed
Risk Category: II
EXP: C Kzt: NA
Mean Height: 15.36 ft
TCDL: 5.0 psf
BCDL: 5.0 psf
MWFRS Parallel Dist: h/2 to h
C&C Dist a: 5.07 ft
Loc. from endwall: not in 13.00 ft
GCpi: 0.18
Wind Duration: 1.60

Snow Criteria (Pg,Pf in PSF)
Pg: NA Ct: NA CAT: NA
Pf: NA Ce: NA
Lu: NA Cs: NA
Snow Duration: NA

Building Code:
FBC 7th Ed. 2020 Res.
TPI Std: 2014
Rep Fac: Yes
FT/RT:20(0)/10(0)
Plate Type(s):
WAVE

Defl/CSI Criteria

PP Deflection in	loc	L/defl	L/#
VERT(LL): 0.147	F	999	240
VERT(CL): 0.263	F	999	180
HORZ(LL): 0.075	N	-	-
HORZ(TL): 0.135	N	-	-

Creep Factor: 2.0
Max TC CSI: 0.684
Max BC CSI: 0.858
Max Web CSI: 0.944

VIEW Ver: 21.01.01A.0521.20

▲ Maximum Reactions (lbs)

Loc	Gravity R+	/ R-	/ Rh	Non-Gravity / Rw	/ U	/ RL
U	2153	/-	/-	/1160	/324	/320
N	2518	/-	/-	/1201	/371	/-
K	409	/-	/-	/220	/86	/-

Wind reactions based on MWFRS
U Brg Width = 4.0 Min Req = 2.5
N Brg Width = 4.0 Min Req = 3.0
K Brg Width = 4.0 Min Req = 1.5
Bearings U, N, & K are a rigid surface.
Members not listed have forces less than 375#

Maximum Top Chord Forces Per Ply (lbs)

Chords	Tens.	Comp.	Chords	Tens.	Comp.
C - D	751	- 2866	F - G	739	- 2093
D - E	771	- 2492	G - H	740	- 2094
E - F	765	- 2205	H - I	676	- 2101

Maximum Bot Chord Forces Per Ply (lbs)

Chords	Tens.	Comp.	Chords	Tens.	Comp.
U - T	2319	- 504	Q - P	1665	- 277
T - S	2238	- 439	P - O	1473	- 267
S - R	1999	- 340	O - N	1470	- 268
R - Q	2209	- 421			

Maximum Web Forces Per Ply (lbs)

Webs	Tens.	Comp.	Webs	Tens.	Comp.
U - C	564	- 2836	Q - H	873	- 276
D - S	181	- 417	I - N	494	- 2483
E - S	626	- 85	N - M	267	- 516
E - R	426	- 203	M - J	282	- 419

Lumber
Top chord: 2x4 SP #2;
Bot chord: 2x4 SP #2;
Webs: 2x4 SP #3;

Bracing
(a) Continuous lateral restraint equally spaced on member.

Plating Notes
All plates are 5X6 except as noted.

Loading
Truss passed check for 20 psf additional bottom chord live load in areas with 42"-high x 24"-wide clearance.

Wind
Wind loads based on MWFRS with additional C&C member design.
Left end vertical not exposed to wind pressure.
Wind loading based on both gable and hip roof types.

Additional Notes
WARNING: Furnish a copy of this DWG to the installation contractor. Special care must be taken during handling, shipping and installation of trusses. See "WARNING" note below.

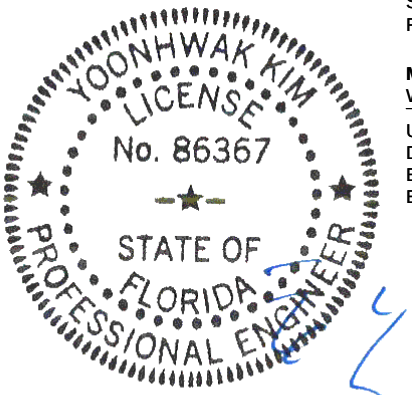

FL REG# 278, Yoonhwak Kim, FL PE #86367
07/01/2021

****WARNING**** READ AND FOLLOW ALL NOTES ON THIS DRAWING!
****IMPORTANT**** FURNISH THIS DRAWING TO ALL CONTRACTORS INCLUDING THE INSTALLERS

Trusses require extreme care in fabricating, handling, shipping, installing and bracing. Refer to and follow the latest edition of BCSI (Building Component Safety Information, by TPI and SBCA) for safety practices prior to performing these functions. Installers shall provide temporary bracing per BCSI. Unless noted otherwise, top chord shall have properly attached structural sheathing and bottom chord shall have a properly attached rigid ceiling. Locations shown for permanent lateral restraint of webs shall have bracing installed per BCSI sections B3, B7, or B10, as applicable. Apply plates to each face of truss and position as shown above and on the Joint Details, unless noted otherwise. Refer to drawings 160A-Z for standard plate positions. Refer to job's General Notes page for additional information.

Alpine, a division of ITW Building Components Group Inc. shall not be responsible for any deviation from this drawing, any failure to build the truss in conformance with ANSI/TPI 1, or for handling, shipping, installation and bracing of trusses. A seal on this drawing or cover page listing this drawing, indicates acceptance of professional engineering responsibility solely for the design shown. The suitability and use of this drawing for any structure is the responsibility of the Building Designer per ANSI/TPI 1 Sec.2.
For more information see these web sites: Alpine: alpineitw.com; TPI: tpinst.org; SBCA: sbcindustry.com; ICC: iccsafe.org; AWC: awc.org

ALPINE AN ITW COMPANY
6750 Forum Drive
Suite 305
Orlando FL, 32821

SEQN: 626632 COMN FROM: CDM	Ply: 1 Qty: 8	**Job Number:** 21-5719 Jones/Freeman **Truss Label:** B05	Cust: R 215 JRef:1X6P2150009 T10 DrwNo: 182.21.1413.29303 / YK 07/01/2021

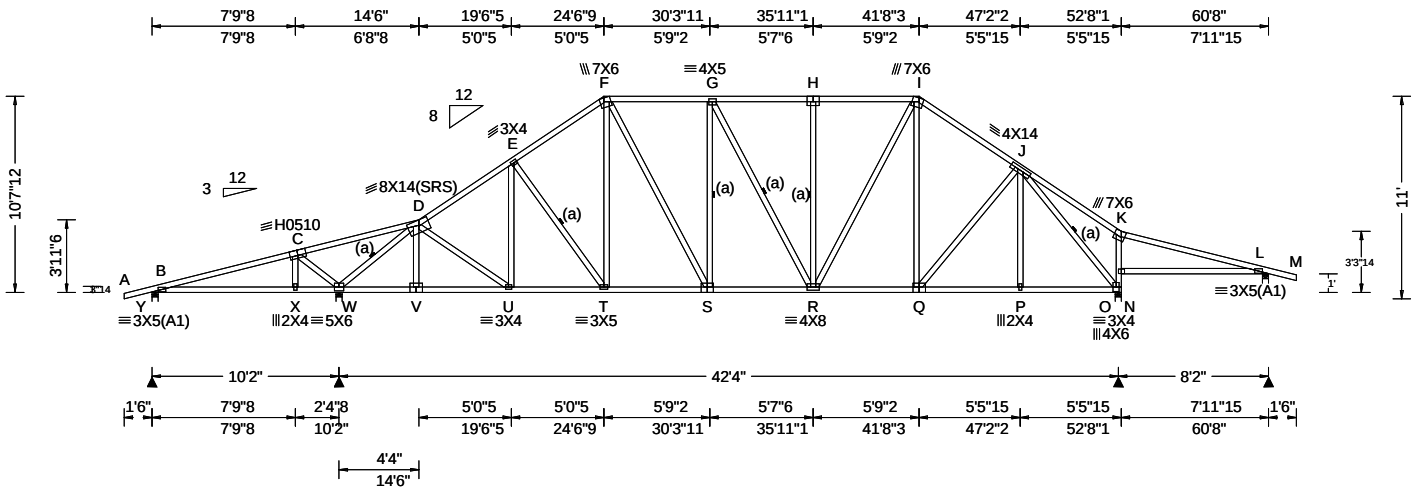

Loading Criteria (psf)

TCLL: 20.00
TCDL: 10.00
BCLL: 0.00
BCDL: 10.00
Des Ld: 40.00
NCBCLL: 10.00
Soffit: 2.00
Load Duration: 1.25
Spacing: 24.0 "

Wind Criteria

Wind Std: ASCE 7-16
Speed: 130 mph
Enclosure: Closed
Risk Category: II
EXP: C Kzt: NA
Mean Height: 15.39 ft
TCDL: 5.0 psf
BCDL: 5.0 psf
MWFRS Parallel Dist: h to 2h
C&C Dist a: 6.07 ft
Loc. from endwall: not in 8.50 ft
GCpi: 0.18
Wind Duration: 1.60

Snow Criteria (Pg,Pf in PSF)

Pg: NA Ct: NA CAT: NA
Pf: NA Ce: NA
Lu: NA Cs: NA
Snow Duration: NA

Building Code:
FBC 7th Ed. 2020 Res.
TPI Std: 2014
Rep Fac: Yes
FT/RT:20(0)/10(0)
Plate Type(s):
WAVE, HS

Defl/CSI Criteria

PP Deflection in	loc	L/defl	L/#
VERT(LL): 0.131	G	999	240
VERT(CL): 0.239	G	999	180
HORZ(LL): 0.058	O	-	-
HORZ(TL): 0.105	O	-	-

Creep Factor: 2.0
Max TC CSI: 0.940
Max BC CSI: 0.667
Max Web CSI: 0.916

VIEW Ver: 21.01.01A.0521.20

▲ Maximum Reactions (lbs)

Loc	Gravity R+	Gravity / R-	Gravity / Rh	Non-Gravity / Rw	Non-Gravity / U	Non-Gravity / RL
Y	339	/0	/-	/114	/88	/274
W	2731	/-	/-	/1397	/60	/-
O	2447	/-	/-	/1190	/42	/-
L	406	/-	/-	/217	/73	/-

Wind reactions based on MWFRS
Y Brg Width = 4.0 Min Req = 1.5
W Brg Width = 4.0 Min Req = 2.8
O Brg Width = 4.0 Min Req = 2.9
L Brg Width = 4.0 Min Req = 1.5
Bearings Y, W, O, & L are a rigid surface.
Members not listed have forces less than 375#

Maximum Top Chord Forces Per Ply (lbs)

Chords	Tens.	Comp.	Chords	Tens.	Comp.
B - C	683	- 192	F - G	723	- 2029
C - D	1138	- 279	G - H	713	- 1957
D - E	638	- 2377	H - I	714	- 1957
E - F	713	- 2231	I - J	657	- 2001

Maximum Bot Chord Forces Per Ply (lbs)

Chords	Tens.	Comp.	Chords	Tens.	Comp.
B - X	221	- 637	T - S	1782	- 285
X - W	218	- 645	S - R	2034	- 373
W - V	1586	- 327	R - Q	1581	- 260
V - U	1583	- 330	Q - P	1415	- 255
U - T	1906	- 347	P - O	1412	- 256

Maximum Web Forces Per Ply (lbs)

Webs	Tens.	Comp.	Webs	Tens.	Comp.
C - W	327	- 782	R - I	778	- 267
W - D	825	- 3385	J - O	478	- 2390
D - U	445	- 60	O - N	271	- 515
F - T	399	- 47	N - K	284	- 417
F - S	527	- 202			

Lumber

Top chord: 2x4 SP #2;
Bot chord: 2x4 SP #2;
Webs: 2x4 SP #3;

Bracing

(a) Continuous lateral restraint equally spaced on member.

Plating Notes

All plates are 6X8 except as noted.

Loading

Truss passed check for 20 psf additional bottom chord live load in areas with 42"-high x 24"-wide clearance.

Wind

Wind loads based on MWFRS with additional C&C member design.

Wind loading based on both gable and hip roof types.

Additional Notes

WARNING: Furnish a copy of this DWG to the installation contractor. Failure to follow provisions of BCSI in handling and installation of trusses can result in serious injuries. Do not permit inexperienced and uninstructed people to install trusses. See "WARNING" note below. BCSI recommends retaining a registered professional engineer for the design of temporary bracing.

YOONHWAK KIM
LICENSE
No. 86367
STATE OF
FLORIDA
PROFESSIONAL ENGINEER

FL REG# 278, Yoonhwak Kim, FL PE #86367
07/01/2021

****WARNING**** READ AND FOLLOW ALL NOTES ON THIS DRAWING!
****IMPORTANT**** FURNISH THIS DRAWING TO ALL CONTRACTORS INCLUDING THE INSTALLERS

Trusses require extreme care in fabricating, handling, shipping, installing and bracing. Refer to and follow the latest edition of BCSI (Building Component Safety Information, by TPI and SBCA) for safety practices prior to performing these functions. Installers shall provide temporary bracing per BCSI. Unless noted otherwise, top chord shall have properly attached structural sheathing and bottom chord shall have a properly attached rigid ceiling. Locations shown for permanent lateral restraint of webs shall have bracing installed per BCSI sections B3, B7, or B10, as applicable. Apply plates to each face of truss and position as shown above and on the Joint Details, unless noted otherwise. Refer to drawings 160A-Z for standard plate positions. Refer to job's General Notes page for additional information.

Alpine, a division of ITW Building Components Group Inc. shall not be responsible for any deviation from this drawing, any failure to build the truss in conformance with ANSI/TPI 1, or for handling, shipping, installation and bracing of trusses. A seal on this drawing or cover page listing this drawing, indicates acceptance of professional engineering responsibility solely for the design shown. The suitability and use of this drawing for any structure is the responsibility of the Building Designer per ANSI/TPI 1 Sec.2.

For more information see these web sites: Alpine: alpineitw.com; TPI: tpinst.org; SBCA: sbcindustry.com; ICC: iccsafe.org; AWC: awc.org

ALPINE AN ITW COMPANY
6750 Forum Drive
Suite 305
Orlando FL, 32821

SEQN: 626981 COMN FROM: CDM	Ply: 1 Qty: 1	**Job Number:** 21-5719 Jones/Freeman **Truss Label:** B05	Cust: R 215 JRef:1X6P2150009 T55 DrwNo: 182.21.1413.32690 / YK 07/01/2021

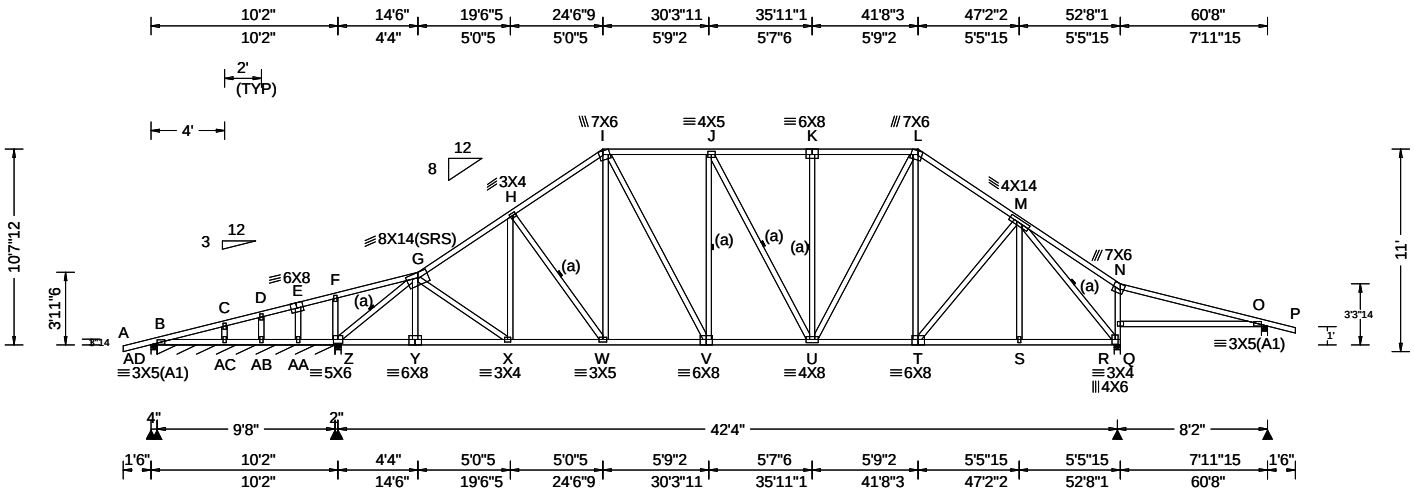

Loading Criteria (psf)

TCLL: 20.00
TCDL: 10.00
BCLL: 0.00
BCDL: 10.00
Des Ld: 40.00
NCBCLL: 10.00
Soffit: 2.00
Load Duration: 1.25
Spacing: 24.0 "

Wind Criteria

Wind Std: ASCE 7-16
Speed: 130 mph
Enclosure: Closed
Risk Category: II
EXP: C Kzt: NA
Mean Height: 15.39 ft
TCDL: 5.0 psf
BCDL: 5.0 psf
MWFRS Parallel Dist: h to 2h
C&C Dist a: 6.07 ft
Loc. from endwall: not in 8.50 ft
GCpi: 0.18
Wind Duration: 1.60

Snow Criteria (Pg,Pf in PSF)

Pg: NA Ct: NA CAT: NA
Pf: NA Ce: NA
Lu: NA Cs: NA
Snow Duration: NA

Building Code:
FBC 7th Ed. 2020 Res.
TPI Std: 2014
Rep Fac: Yes
FT/RT:20(0)/10(0)
Plate Type(s):
WAVE

Defl/CSI Criteria

PP Deflection in	loc	L/defl	L/#
VERT(LL): 0.131	J	999	240
VERT(CL): 0.239	J	999	180
HORZ(LL): 0.056	R	-	-
HORZ(TL): 0.103	R	-	-

Creep Factor: 2.0
Max TC CSI: 0.682
Max BC CSI: 0.670
Max Web CSI: 0.920

VIEW Ver: 21.01.01A.0521.20

▲ Maximum Reactions (lbs), or *=PLF

	Gravity			Non-Gravity		
Loc	R+	/ R-	/ Rh	/ Rw	/ U	/ RL
AD	136	/-101	/-	/31	/97	/274
B*	52	/-	/-	/26	/2	/-
Z	2470	/-	/-	/1256	/47	/-
R	2451	/-	/-	/1193	/43	/-
O	406	/-	/-	/217	/73	/-
B		/-100				

Wind reactions based on MWFRS

AD	Brg Width = 4.0	Min Req = 1.5
B	Brg Width = 116	Min Req = -
Z	Brg Width = 4.0	Min Req = 2.5
R	Brg Width = 4.0	Min Req = 2.9
O	Brg Width = 4.0	Min Req = 1.5

Bearings AD, B, Z, R, & O are a rigid surface.

Members not listed have forces less than 375#

Maximum Top Chord Forces Per Ply (lbs)

Chords	Tens.	Comp.	Chords	Tens.	Comp.
B - C	861	- 255	H - I	715	- 2249
C - D	850	- 226	I - J	724	- 2042
D - E	855	- 206	J - K	715	- 1970
E - F	876	- 197	K - L	715	- 1971
F - G	893	- 167	L - M	658	- 2013
G - H	654	- 2397			

Maximum Bot Chord Forces Per Ply (lbs)

Chords	Tens.	Comp.	Chords	Tens.	Comp.
B -AC	244	- 813	X - W	1929	- 351
AC-AB	248	- 816	W - V	1795	- 286
AB-AA	249	- 818	V - U	2048	- 375
AA- Z	250	- 818	U - T	1590	- 261
Z - Y	1609	- 326	T - S	1422	- 256
Y - X	1607	- 328	S - R	1419	- 256

Maximum Web Forces Per Ply (lbs)

Webs	Tens.	Comp.	Webs	Tens.	Comp.
Z - G	727	- 3195	U - L	783	- 270
G - X	400	- 61	M - R	479	- 2402
I - W	413	- 57	R - Q	271	- 515
I - V	518	- 198	Q - N	284	- 417

Lumber

Top chord: 2x4 SP #2;
Bot chord: 2x4 SP #2;
Webs: 2x4 SP #3;

Bracing

(a) Continuous lateral restraint equally spaced on member.

Plating Notes

All plates are 2X4 except as noted.

Loading

Truss passed check for 20 psf additional bottom chord live load in areas with 42"-high x 24"-wide clearance.

Wind

Wind loads based on MWFRS with additional C&C member design.

Wind loading based on both gable and hip roof types.

Additional Notes

WARNING: Furnish a copy of this DWG to the installation contractor. Failure to follow provisions of BCSI in handling and installation of trusses can result in serious injuries. Do not permit inexperienced and uninstructed people to install trusses. See "WARNING" note below. BCSI recommends retaining a registered professional engineer for the design of temporary bracing.

YOONHWAK KIM
LICENSE
No. 86367
STATE OF
FLORIDA
PROFESSIONAL ENGINEER

FL REG# 278, Yoonhwak Kim, FL PE #86367
07/01/2021

****WARNING**** READ AND FOLLOW ALL NOTES ON THIS DRAWING!
****IMPORTANT**** FURNISH THIS DRAWING TO ALL CONTRACTORS INCLUDING THE INSTALLERS

Trusses require extreme care in fabricating, handling, shipping, installing and bracing. Refer to and follow the latest edition of BCSI (Building Component Safety Information, by TPI and SBCA) for safety practices prior to performing these functions. Installers shall provide temporary bracing per BCSI. Unless noted otherwise, top chord shall have properly attached structural sheathing and bottom chord shall have a properly attached rigid ceiling. Locations shown for permanent lateral restraint of webs shall have bracing installed per BCSI sections B3, B7, or B10, as applicable. Apply plates to each face of truss and position as shown above and on the Joint Details, unless noted otherwise. Refer to drawings 160A-Z for standard plate positions. Refer to job's General Notes page for additional information.

Alpine, a division of ITW Building Components Group Inc. shall not be responsible for any deviation from this drawing, any failure to build the truss in conformance with ANSI/TPI 1, or for handling, shipping, installation and bracing of trusses. A seal on this drawing or cover page listing this drawing, indicates acceptance of professional engineering responsibility solely for the design shown. The suitability and use of this drawing for any structure is the responsibility of the Building Designer per ANSI/TPI 1 Sec.2.

For more information see these web sites: Alpine: alpineitw.com; TPI: tpinst.org; SBCA: sbcindustry.com; ICC: iccsafe.org; AWC: awc.org

ALPINE
AN ITW COMPANY
6750 Forum Drive
Suite 305
Orlando FL, 32821

SEQN: 627000 COMN	Ply: 2	**Job Number:** 21-5719	Cust: R 215 JRef:1X6P2150009 T40
FROM: CDM	Qty: 2	Jones/Freeman	DrwNo: 182.21.1413.39580
Page 1 of 2		**Truss Label:** B06	/ YK 07/01/2021

2 Complete Trusses Required

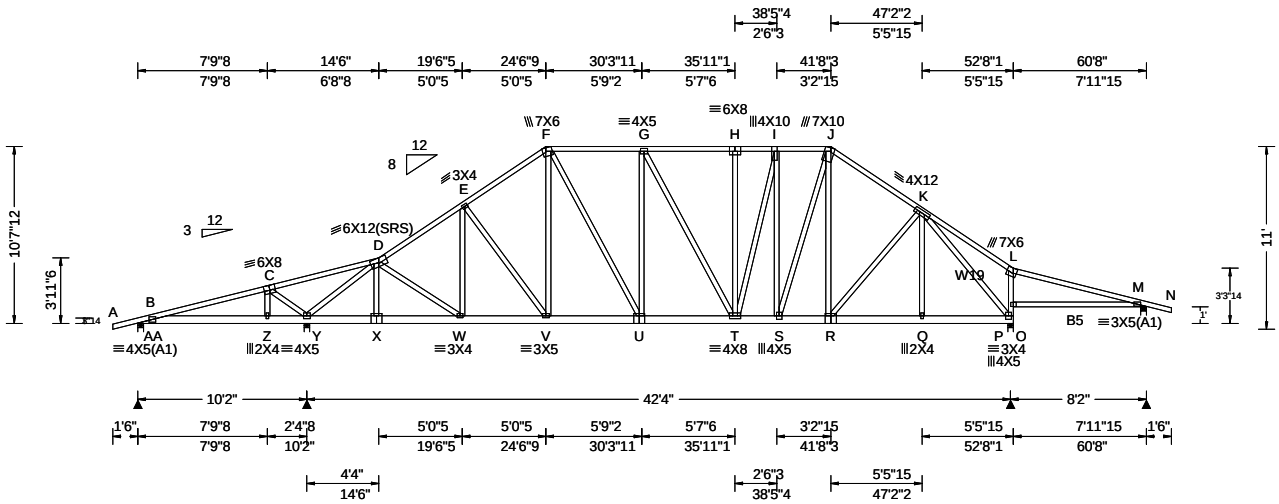

Loading Criteria (psf)	**Wind Criteria**	**Snow Criteria** (Pg,Pf in PSF)	**Defl/CSI Criteria**
TCLL: 20.00	Wind Std: ASCE 7-16	Pg: NA Ct: NA CAT: NA	PP Deflection in loc L/defl L/#
TCDL: 10.00	Speed: 130 mph	Pf: NA Ce: NA	VERT(LL): 0.095 H 999 240
BCLL: 0.00	Enclosure: Closed	Lu: NA Cs: NA	VERT(CL): 0.183 H 999 180
BCDL: 10.00	Risk Category: II	Snow Duration: NA	HORZ(LL): 0.022 P - -
Des Ld: 40.00	EXP: C Kzt: NA		HORZ(TL): 0.042 P - -
NCBCLL: 0.00	Mean Height: 15.39 ft	Building Code:	Creep Factor: 2.0
Soffit: 2.00	TCDL: 5.0 psf	FBC 7th Ed. 2020 Res.	Max TC CSI: 0.447
Load Duration: 1.25	BCDL: 5.0 psf	TPI Std: 2014	Max BC CSI: 0.362
Spacing: 24.0 "	MWFRS Parallel Dist: 0 to h/2	Rep Fac: No	Max Web CSI: 0.885
	C&C Dist a: 6.07 ft	FT/RT:20(0)/10(0)	
	Loc. from endwall: not in 17.00 ft	Plate Type(s):	
	GCpi: 0.18	WAVE	VIEW Ver: 21.01.01A.0521.20
	Wind Duration: 1.60		

▲ Maximum Reactions (lbs)

Loc	Gravity R+	Gravity / R-	Gravity / Rh	Non-Gravity / Rw	Non-Gravity / U	Non-Gravity / RL
AA	252	/-54	/-	/-	/91	/-
Y	3631	/-	/-	/-	/339	/-
P	3903	/-	/-	/-	/227	/-
M	399	/-	/-	/-	/96	/-

Wind reactions based on MWFRS
AA Brg Width = 4.0 Min Req = 1.5
Y Brg Width = 4.0 Min Req = 1.5
P Brg Width = 4.0 Min Req = 1.6
M Brg Width = 4.0 Min Req = 1.5
Bearings AA, Y, P, & M are a rigid surface.
Members not listed have forces less than 375#

Maximum Top Chord Forces Per Ply (lbs)

Chords	Tens.	Comp.	Chords	Tens.	Comp.
B - C	461	- 12	G - H	50	- 2008
C - D	664	- 72	H - I	50	- 2008
D - E	131	- 1832	I - J	39	- 1940
E - F	113	- 1797	J - K	70	- 1948
F - G	79	- 1808			

Maximum Bot Chord Forces Per Ply (lbs)

Chords	Tens.	Comp.	Chords	Tens.	Comp.
B - Z	2	- 436	U - T	1823	- 80
Z - Y	0	- 437	T - S	1948	- 40
Y - X	1220	- 87	S - R	1576	- 42
X - W	1222	- 88	R - Q	1281	- 44
W - V	1491	- 95	Q - P	1280	- 44
V - U	1457	- 81			

Maximum Web Forces Per Ply (lbs)

Webs	Tens.	Comp.	Webs	Tens.	Comp.
Y - D	191	- 2328	S - J	1254	0
F - U	736	0	R - K	467	0
U - G	22	- 536	K - P	79	- 2130
G - T	448	0			

Lumber

Top chord: 2x4 SP #2;
Bot chord: 2x6 SP 2400f-2.0E; B5 2x4 SP #2;
Webs: 2x4 SP #3; W19 2x4 SP M-31;

Nailnote

Nail Schedule:0.128"x3", min. nails
Top Chord: 1 Row @12.00" o.c.
Bot Chord: 1 Row @12.00" o.c.
Webs : 1 Row @ 4" o.c.
Use equal spacing between rows and stagger nails in each row to avoid splitting.

Special Loads

------(Lumber Dur.Fac.=1.25 / Plate Dur.Fac.=1.25)

TC: From	61 plf at	-1.50 to	61 plf at	14.50
TC: From	64 plf at	14.50 to	64 plf at	24.55
TC: From	61 plf at	24.55 to	61 plf at	41.68
TC: From	64 plf at	41.68 to	64 plf at	52.67
TC: From	61 plf at	52.67 to	61 plf at	62.17
BC: From	4 plf at	-1.50 to	4 plf at	0.00
BC: From	20 plf at	0.00 to	20 plf at	60.67
BC: From	4 plf at	60.67 to	4 plf at	62.17
PLB: From	40 plf at	19.67 to	40 plf at	21.77
PLB: From	40 plf at	24.84 to	40 plf at	28.11
PLB: From	40 plf at	30.45 to	40 plf at	33.73
PLB: From	40 plf at	44.86 to	40 plf at	47.03

BC: 2505 lb Conc. Load at 37.67

Plating Notes

All plates are 7X8 except as noted.

Loading

Truss passed check for 20 psf additional bottom chord live load in areas with 42"-high x 24"-wide clearance.

Wind

Wind loads and reactions based on MWFRS.

Wind loading based on both gable and hip roof types.

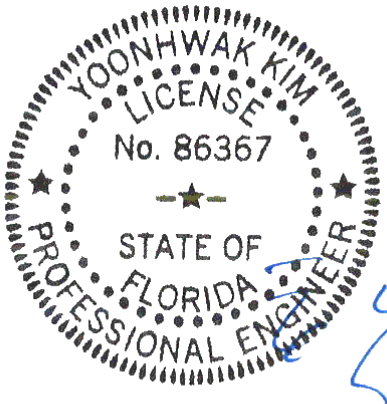

FL REG# 278, Yoonhwak Kim, FL PE #86367
07/01/2021

****WARNING**** READ AND FOLLOW ALL NOTES ON THIS DRAWING!
****IMPORTANT**** FURNISH THIS DRAWING TO ALL CONTRACTORS INCLUDING THE INSTALLERS

Trusses require extreme care in fabricating, handling, shipping, installing and bracing. Refer to and follow the latest edition of BCSI (Building Component Safety Information, by TPI and SBCA) for safety practices prior to performing these functions. Installers shall provide temporary bracing per BCSI. Unless noted otherwise, top chord shall have properly attached structural sheathing and bottom chord shall have a properly attached rigid ceiling. Locations shown for permanent lateral restraint of webs shall have bracing installed per BCSI sections B3, B7, or B10, as applicable. Apply plates to each face of truss and position as shown above and on the Joint Details, unless noted otherwise. Refer to drawings 160A-Z for standard plate positions. Refer to job's General Notes page for additional information.

Alpine, a division of ITW Building Components Group Inc. shall not be responsible for any deviation from this drawing, any failure to build the truss in conformance with ANSI/TPI 1, or for handling, shipping, installation and bracing of trusses. A seal on this drawing or cover page listing this drawing, indicates acceptance of professional engineering responsibility solely for the design shown. The suitability and use of this drawing for any structure is the responsibility of the Building Designer per ANSI/TPI 1 Sec.2.

For more information see these web sites: Alpine: alpineitw.com; TPI: tpinst.org; SBCA: sbcindustry.com; ICC: iccsafe.org; AWC: awc.org

ALPINE
AN ITW COMPANY
6750 Forum Drive
Suite 305
Orlando FL, 32821

Additional Notes

WARNING: Furnish a copy of this DWG to the installation contractor. Failure to follow provisions of BCSI in handling and installation of trusses can result in serious injuries. Do not permit inexperienced and uninstructed people to install trusses. See "WARNING" note below. BCSI recommends retaining a registered professional engineer for the design of temporary bracing.

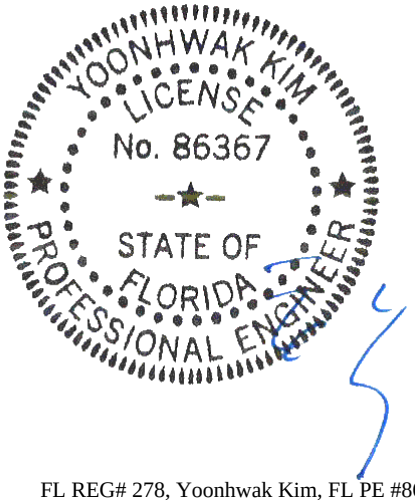

FL REG# 278, Yoonhwak Kim, FL PE #86367
07/01/2021

****WARNING**** READ AND FOLLOW ALL NOTES ON THIS DRAWING!
****IMPORTANT**** FURNISH THIS DRAWING TO ALL CONTRACTORS INCLUDING THE INSTALLERS

Trusses require extreme care in fabricating, handling, shipping, installing and bracing. Refer to and follow the latest edition of BCSI (Building Component Safety Information, by TPI and SBCA) for safety practices prior to performing these functions. Installers shall provide temporary bracing per BCSI. Unless noted otherwise, top chord shall have properly attached structural sheathing and bottom chord shall have a properly attached rigid ceiling. Locations shown for permanent lateral restraint of webs shall have bracing installed per BCSI sections B3, B7, or B10, as applicable. Apply plates to each face of truss and position as shown above and on the Joint Details, unless noted otherwise. Refer to drawings 160A-Z for standard plate positions. Refer to job's General Notes page for additional information.

Alpine, a division of ITW Building Components Group Inc. shall not be responsible for any deviation from this drawing, any failure to build the truss in conformance with ANSI/TPI 1, or for handling, shipping, installation and bracing of trusses. A seal on this drawing or cover page listing this drawing, indicates acceptance of professional engineering responsibility solely for the design shown. The suitability and use of this drawing for any structure is the responsibility of the Building Designer per ANSI/TPI 1 Sec.2.

For more information see these web sites: Alpine: alpineitw.com; TPI: tpinst.org; SBCA: sbcindustry.com; ICC: iccsafe.org; AWC: awc.org

ALPINE
AN ITW COMPANY
6750 Forum Drive
Suite 305
Orlando FL, 32821

SEQN: 626668 COMN FROM: CDM	Ply: 1 Qty: 4	**Job Number:** 21-5719 Jones/Freeman **Truss Label:** B07	Cust: R 215 JRef:1X6P2150009 T23 DrwNo: 182.21.1413.43327 / YK 07/01/2021

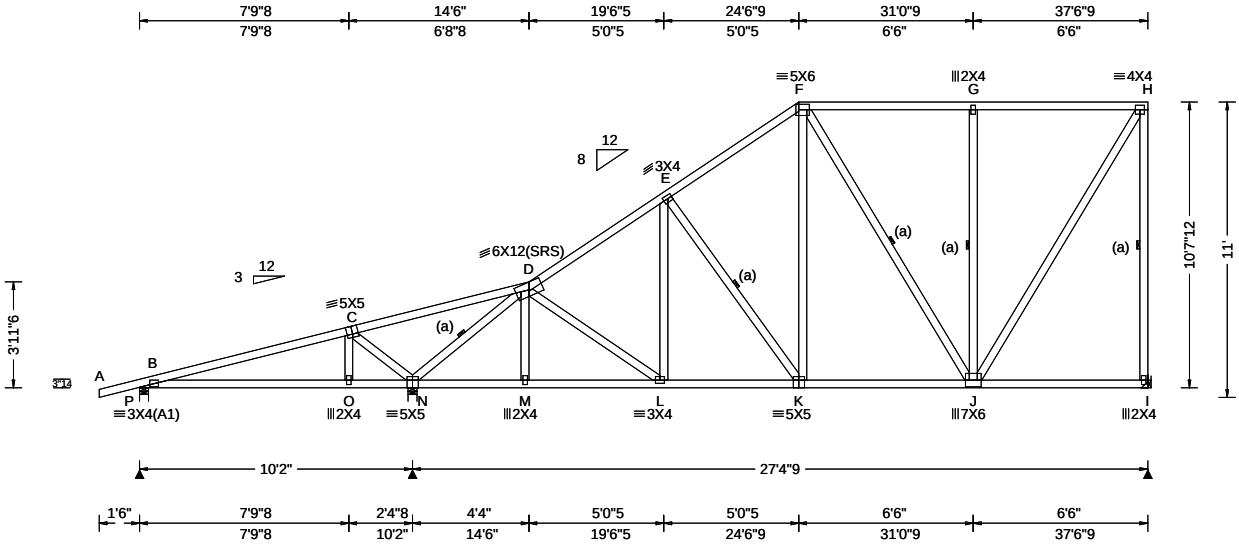

Loading Criteria (psf)

TCLL: 20.00
TCDL: 10.00
BCLL: 0.00
BCDL: 10.00
Des Ld: 40.00
NCBCLL: 10.00
Soffit: 2.00
Load Duration: 1.25
Spacing: 24.0 "

Wind Criteria

Wind Std: ASCE 7-16
Speed: 130 mph
Enclosure: Closed
Risk Category: II
EXP: C Kzt: NA
Mean Height: 18.25 ft
TCDL: 5.0 psf
BCDL: 5.0 psf
MWFRS Parallel Dist: h to 2h
C&C Dist a: 3.75 ft
Loc. from endwall: not in 9.00 ft
GCpi: 0.18
Wind Duration: 1.60

Snow Criteria (Pg,Pf in PSF)

Pg: NA Ct: NA CAT: NA
Pf: NA Ce: NA
Lu: NA Cs: NA
Snow Duration: NA

Building Code:
FBC 7th Ed. 2020 Res.
TPI Std: 2014
Rep Fac: Yes
FT/RT:20(0)/10(0)
Plate Type(s):
WAVE

Defl/CSI Criteria

PP Deflection in	loc	L/defl	L/#
VERT(LL): 0.054	K	999	240
VERT(CL): 0.101	K	999	180
HORZ(LL): 0.018	E	-	-
HORZ(TL): 0.033	E	-	-

Creep Factor: 2.0
Max TC CSI: 0.735
Max BC CSI: 0.575
Max Web CSI: 0.687

VIEW Ver: 21.01.01A.0521.20

▲Maximum Reactions (lbs)

Loc	Gravity R+	/ R-	/ Rh	Non-Gravity / Rw	/ U	/ RL
P	403	/-	/-	/178	/99	/265
N	1881	/-	/-	/1018	/-	/-
I	1362	/-	/-	/647	/-	/-

Wind reactions based on MWFRS
P Brg Width = 4.0 Min Req = 1.5
N Brg Width = 4.0 Min Req = 1.9
I Brg Width = - Min Req = -
Bearings P & N are a rigid surface.
Members not listed have forces less than 375#

Maximum Top Chord Forces Per Ply (lbs)

Chords	Tens.	Comp.	Chords	Tens.	Comp.
C - D	711	- 247	F - G	0	- 668
D - E	0	- 1379	G - H	0	- 668
E - F	11	- 1122			

Maximum Bot Chord Forces Per Ply (lbs)

Chords	Tens.	Comp.	Chords	Tens.	Comp.
N - M	1011	- 207	L - K	1069	- 159
M - L	1008	- 209	K - J	861	- 50

Maximum Web Forces Per Ply (lbs)

Webs	Tens.	Comp.	Webs	Tens.	Comp.
C - N	321	- 773	G - J	0	- 483
N - D	164	- 2092	J - H	1256	0
F - K	534	- 97	H - I	0	- 1227

Lumber

Top chord: 2x4 SP #2;
Bot chord: 2x4 SP #2;
Webs: 2x4 SP #3;

Bracing

(a) Continuous lateral restraint equally spaced on member.

Hangers / Ties

Simpson Construction Hardware is specified based on the most current information provided by Simpson Strong-Tie. Please refer to the most recent Simpson Strong-Tie catalog for additional information.

Recommended hanger connections are based on manufacturer tested capacities and calculations. Conditions may exist that require different connections than indicated. Refer to manufacturer publication for additional information.

Hanger specified assumes connection to supporting chord is located a minimum of five times the depth of the supporting chord from any unsupported end, unless unsupported chord end has 85% plating coverage.

Bearing at location x=37'3"9 uses the following support conditions: 37'3"9
Bearing I (37'3"9, 10'1"2) HUS26
Supporting Member: (2)2x6 SP 2400f-2.0E
(14) 0.148"x3" nails into supporting member,
(4) 0.148"x3" nails into supported member.

Loading

Truss passed check for 20 psf additional bottom chord live load in areas with 42"-high x 24"-wide clearance.

Wind

Wind loads based on MWFRS with additional C&C member design.

Right end vertical not exposed to wind pressure.

Wind loading based on both gable and hip roof types.

Additional Notes

Refer to DWG PB160160118 for plug/back details.

YOONHWAK KIM LICENSE No. 86367 STATE OF FLORIDA PROFESSIONAL ENGINEER

FL REG# 278, Yoonhwak Kim, FL PE #86367
07/01/2021

****WARNING**** READ AND FOLLOW ALL NOTES ON THIS DRAWING!
****IMPORTANT**** FURNISH THIS DRAWING TO ALL CONTRACTORS INCLUDING THE INSTALLERS

Trusses require extreme care in fabricating, handling, shipping, installing and bracing. Refer to and follow the latest edition of BCSI (Building Component Safety Information, by TPI and SBCA) for safety practices prior to performing these functions. Installers shall provide temporary bracing per BCSI. Unless noted otherwise, top chord shall have properly attached structural sheathing and bottom chord shall have a properly attached rigid ceiling. Locations shown for permanent lateral restraint of webs shall have bracing installed per BCSI sections B3, B7, or B10, as applicable. Apply plates to each face of truss and position as shown above and on the Joint Details, unless noted otherwise. Refer to drawings 160A-Z for standard plate positions. Refer to job's General Notes page for additional information.

Alpine, a division of ITW Building Components Group Inc. shall not be responsible for any deviation from this drawing, any failure to build the truss in conformance with ANSI/TPI 1, or for handling, shipping, installation and bracing of trusses. A seal on this drawing or cover page listing this drawing, indicates acceptance of professional engineering responsibility solely for the design shown. The suitability and use of this drawing for any structure is the responsibility of the Building Designer per ANSI/TPI 1 Sec.2.

For more information see these web sites: Alpine: alpineitw.com; TPI: tpinst.org; SBCA: sbcindustry.com; ICC: iccsafe.org; AWC: awc.org

ALPINE AN ITW COMPANY
6750 Forum Drive
Suite 305
Orlando FL, 32821

SEQN: 626665 GABL	Ply: 1	**Job Number:** 21-5719	Cust: R 215 JRef:1X6P2150009 T5
FROM: CDM	Qty: 1	Jones/Freeman	DrwNo: 182.21.1413.48590
Page 1 of 2		**Truss Label:** B08	/ YK 07/01/2021

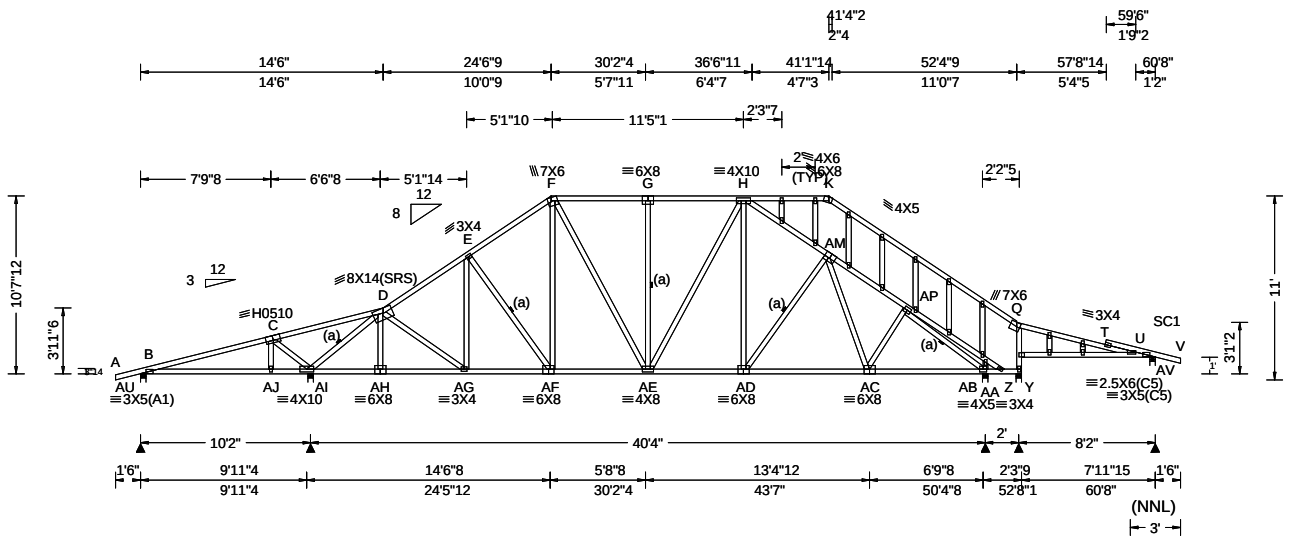

Loading Criteria (psf)		**Wind Criteria**	**Snow Criteria** (Pg,Pf in PSF)	**Defl/CSI Criteria**
TCLL:	20.00	Wind Std: ASCE 7-16	Pg: NA Ct: NA CAT: NA	PP Deflection in loc L/defl L/#
TCDL:	10.00	Speed: 130 mph	Pf: NA Ce: NA	VERT(LL): 0.173 W 543 240
BCLL:	0.00	Enclosure: Closed	Lu: NA Cs: NA	VERT(CL): 0.318 W 296 180
BCDL:	10.00	Risk Category: II	Snow Duration: NA	HORZ(LL): 0.088 Q - -
Des Ld:	40.00	EXP: C Kzt: NA		HORZ(TL): 0.164 Q - -
NCBCLL:	10.00	Mean Height: 15.39 ft	Building Code:	Creep Factor: 2.0
Soffit:	2.00	TCDL: 5.0 psf	FBC 7th Ed. 2020 Res.	Max TC CSI: 0.826
Load Duration: 1.25		BCDL: 5.0 psf	TPI Std: 2014	Max BC CSI: 0.880
Spacing: 24.0 "		MWFRS Parallel Dist: > 2h	Rep Fac: Yes	Max Web CSI: 0.721
		C&C Dist a: 6.07 ft	FT/RT:20(0)/10(0)	
		Loc. from endwall: not in 17.00 ft	Plate Type(s):	
		GCpi: 0.18	WAVE, HS	VIEW Ver: 21.01.01A.0521.20
		Wind Duration: 1.60		

▲ Maximum Reactions (lbs)

	Gravity			Non-Gravity		
Loc	R+	/ R-	/ Rh	/ Rw	/ U	/ RL
AU	375	/-	/-	/139	/85	/290
AI	2548	/-	/-	/1327	/48	/-
AB	1839	/-	/-	/957	/32	/-
Z	541	/-	/-	/271	/-	/-
AV	428	/-	/-	/224	/43	/-

Wind reactions based on MWFRS

AU	Brg Width = 4.0	Min Req = 1.5
AI	Brg Width = 4.0	Min Req = 2.6
AB	Brg Width = 4.0	Min Req = 1.8
Z	Brg Width = 4.0	Min Req = 1.5
AV	Brg Width = 4.0	Min Req = 1.5

Bearings AU, AI, AB, Z, & AV are a rigid surface.

Members not listed have forces less than 375#

Maximum Top Chord Forces Per Ply (lbs)

Chords	Tens.	Comp.	Chords	Tens.	Comp.
B - C	457	- 150	F - G	693	- 1845
C - D	997	- 263	G - H	692	- 1845
D - E	618	- 2273	T - U	439	- 496
E - F	686	- 2090			

Maximum Bot Chord Forces Per Ply (lbs)

Chords	Tens.	Comp.	Chords	Tens.	Comp.
B -AJ	151	- 419	AF-AE	1660	- 305
AJ-AI	149	- 435	AE-AD	1726	- 360
AI-AH	3138	- 721	AD-AC	1946	- 378
AH-AG	1570	- 364	AC-AB	1982	- 430
AG-AF	1819	- 382	AB-AA	385	- 106

Maximum Web Forces Per Ply (lbs)

Webs	Tens.	Comp.	Webs	Tens.	Comp.
C -AI	368	- 942	AM-AP	496	- 2425
AI- D	776	- 3128	AP-AB	512	- 2249
F -AE	388	- 181	Q - Y	0	- 400
H -AM	460	- 2158	Y - Z	0	- 510

Maximum Gable Forces Per Ply (lbs)

Gables	Tens.	Comp.	Gables	Tens.	Comp.
AJ- C	396	- 9	H -AD	594	0
AE- F	449	- 55			

Lumber

Top chord: 2x4 SP #2;
Bot chord: 2x4 SP #2;
Webs: 2x4 SP #3;
Stack Chord: SC1 2x4 SP #2;

Bracing

(a) Continuous lateral restraint equally spaced on member.

Plating Notes

All plates are 2X4 except as noted.

Loading

Gable end supports 8" max rake overhang. Top chord must not be cut or notched.

Truss passed check for 20 psf additional bottom chord live load in areas with 42"-high x 24"-wide clearance.

Purlins

In lieu of structural panels use purlins to brace all sloping TC @ 24" oc; all flat TC @ 0" oc.

Wind

Wind loads based on MWFRS with additional C&C member design.

Wind loading based on both gable and hip roof types.

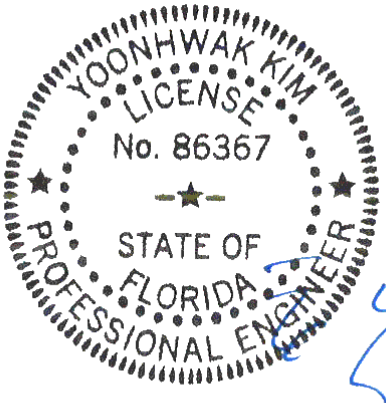

FL REG# 278, Yoonhwak Kim, FL PE #86367
07/01/2021

****WARNING**** READ AND FOLLOW ALL NOTES ON THIS DRAWING!
****IMPORTANT**** FURNISH THIS DRAWING TO ALL CONTRACTORS INCLUDING THE INSTALLERS

Trusses require extreme care in fabricating, handling, shipping, installing and bracing. Refer to and follow the latest edition of BCSI (Building Component Safety Information, by TPI and SBCA) for safety practices prior to performing these functions. Installers shall provide temporary bracing per BCSI. Unless noted otherwise, top chord shall have properly attached structural sheathing and bottom chord shall have a properly attached rigid ceiling. Locations shown for permanent lateral restraint of webs shall have bracing installed per BCSI sections B3, B7, or B10, as applicable. Apply plates to each face of truss and position as shown above and on the Joint Details, unless noted otherwise. Refer to drawings 160A-Z for standard plate positions. Refer to job's General Notes page for additional information.

Alpine, a division of ITW Building Components Group Inc. shall not be responsible for any deviation from this drawing, any failure to build the truss in conformance with ANSI/TPI 1, or for handling, shipping, installation and bracing of trusses. A seal on this drawing or cover page listing this drawing, indicates acceptance of professional engineering responsibility solely for the design shown. The suitability and use of this drawing for any structure is the responsibility of the Building Designer per ANSI/TPI 1 Sec.2.

For more information see these web sites: Alpine: alpineitw.com; TPI: tpinst.org; SBCA: sbcindustry.com; ICC: iccsafe.org; AWC: awc.org

ALPINE
AN ITW COMPANY
6750 Forum Drive
Suite 305
Orlando FL, 32821

Additional Notes

See DWGS A14030ENC160118 & GBLLETIN0118 for gable wind bracing and other requirements.

Stacked top chord must NOT be notched or cut in area (NNL). Dropped top chord braced at 24" oc intervals. Attach stacked top chord (SC) to dropped top chord in notchable area using 3x4 tie-plates 24" oc. Center plate on stacked/dropped chord interface, plate length perpendicular to chord length. Splice top chord in notchable area using 3x6.

WARNING: Furnish a copy of this DWG to the installation contractor. Failure to follow provisions of BCSI in handling and installation of trusses can result in serious injuries. Do not permit inexperienced and uninstructed people to install trusses. See "WARNING" note below. BCSI recommends retaining a registered professional engineer for the design of temporary bracing.

YOONHWAK KIM
LICENSE
No. 86367
STATE OF
FLORIDA
PROFESSIONAL ENGINEER

FL REG# 278, Yoonhwak Kim, FL PE #86367
07/01/2021

****WARNING**** READ AND FOLLOW ALL NOTES ON THIS DRAWING!
****IMPORTANT**** FURNISH THIS DRAWING TO ALL CONTRACTORS INCLUDING THE INSTALLERS

Trusses require extreme care in fabricating, handling, shipping, installing and bracing. Refer to and follow the latest edition of BCSI (Building Component Safety Information, by TPI and SBCA) for safety practices prior to performing these functions. Installers shall provide temporary bracing per BCSI. Unless noted otherwise, top chord shall have properly attached structural sheathing and bottom chord shall have a properly attached rigid ceiling. Locations shown for permanent lateral restraint of webs shall have bracing installed per BCSI sections B3, B7, or B10, as applicable. Apply plates to each face of truss and position as shown above and on the Joint Details, unless noted otherwise. Refer to drawings 160A-Z for standard plate positions. Refer to job's General Notes page for additional information.

Alpine, a division of ITW Building Components Group Inc. shall not be responsible for any deviation from this drawing, any failure to build the truss in conformance with ANSI/TPI 1, or for handling, shipping, installation and bracing of trusses. A seal on this drawing or cover page listing this drawing, indicates acceptance of professional engineering responsibility solely for the design shown. The suitability and use of this drawing for any structure is the responsibility of the Building Designer per ANSI/TPI 1 Sec.2.

For more information see these web sites: Alpine: alpineitw.com; TPI: tpinst.org; SBCA: sbcindustry.com; ICC: iccsafe.org; AWC: awc.org

ALPINE
AN ITW COMPANY
6750 Forum Drive
Suite 305
Orlando FL, 32821

SEQN: 626627 SPEC FROM: CDM	Ply: 1 Qty: 3	**Job Number:** 21-5719 Jones/Freeman **Truss Label:** B09	Cust: R 215 JRef:1X6P2150009 T53 DrwNo: 182.21.1413.51160 / YK 07/01/2021

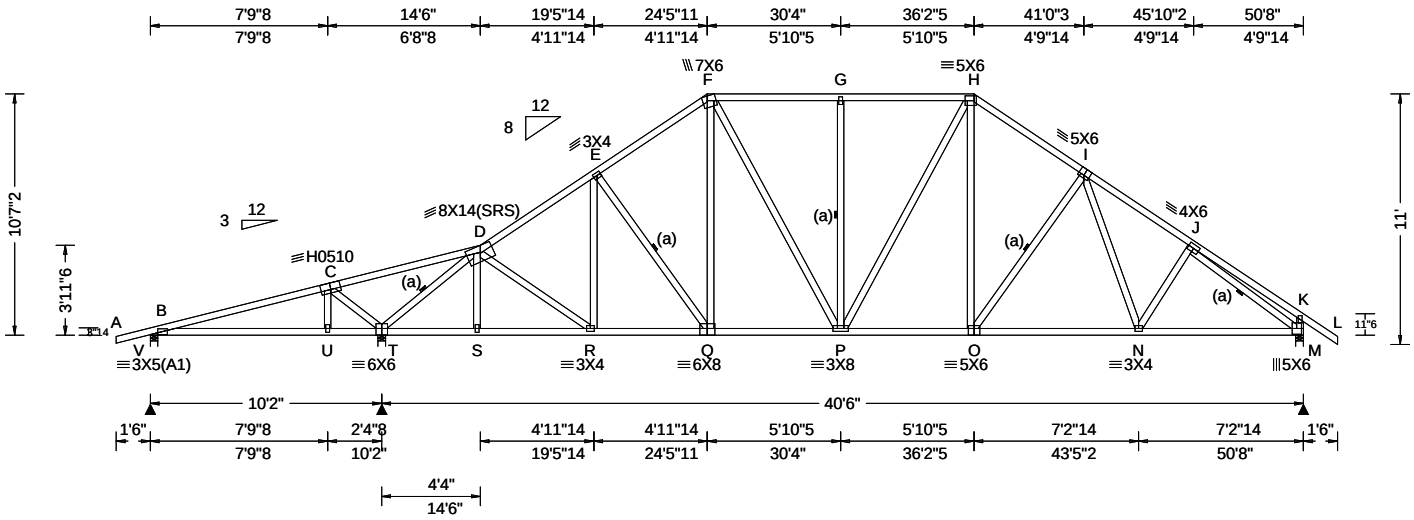

Loading Criteria (psf)

TCLL: 20.00
TCDL: 10.00
BCLL: 0.00
BCDL: 10.00
Des Ld: 40.00
NCBCLL: 10.00
Soffit: 2.00
Load Duration: 1.25
Spacing: 24.0 "

Wind Criteria

Wind Std: ASCE 7-16
Speed: 130 mph
Enclosure: Closed
Risk Category: II
EXP: C Kzt: NA
Mean Height: 15.36 ft
TCDL: 5.0 psf
BCDL: 5.0 psf
MWFRS Parallel Dist: > 2h
C&C Dist a: 5.07 ft
Loc. from endwall: not in 13.00 ft
GCpi: 0.18
Wind Duration: 1.60

Snow Criteria (Pg,Pf in PSF)

Pg: NA Ct: NA CAT: NA
Pf: NA Ce: NA
Lu: NA Cs: NA
Snow Duration: NA

Building Code:
FBC 7th Ed. 2020 Res.
TPI Std: 2014
Rep Fac: Yes
FT/RT:20(0)/10(0)
Plate Type(s):
WAVE, HS

Defl/CSI Criteria

PP Deflection in	loc	L/defl	L/#
VERT(LL): 0.131	G	999	240
VERT(CL): 0.242	G	999	180
HORZ(LL): 0.066	K	-	-
HORZ(TL): 0.122	K	-	-

Creep Factor: 2.0
Max TC CSI: 0.937
Max BC CSI: 0.801
Max Web CSI: 0.747

VIEW Ver: 21.01.01A.0521.20

▲ Maximum Reactions (lbs)

Loc	Gravity R+	/ R-	/ Rh	Non-Gravity / Rw	/ U	/ RL
V	341	/-	/-	/112	/96	/333
T	2628	/-	/-	/1347	/100	/-
M	1975	/-	/-	/1092	/29	/-

Wind reactions based on MWFRS
V Brg Width = 4.0 Min Req = 1.5
T Brg Width = 4.0 Min Req = 2.6
M Brg Width = 4.0 Min Req = 2.3
Bearings V, T, & M are a rigid surface.
Members not listed have forces less than 375#

Maximum Top Chord Forces Per Ply (lbs)

Chords	Tens.	Comp.	Chords	Tens.	Comp.
B - C	674	- 173	F - G	714	- 1862
C - D	1129	- 274	G - H	714	- 1862
D - E	641	- 2226	H - I	729	- 2188
E - F	698	- 2077	I - J	717	- 2584

Maximum Bot Chord Forces Per Ply (lbs)

Chords	Tens.	Comp.	Chords	Tens.	Comp.
B - U	243	- 629	Q - P	1654	- 236
U - T	240	- 637	P - O	1747	- 257
T - S	1479	- 279	O - N	1994	- 344
S - R	1476	- 282	N - M	2098	- 422
R - Q	1781	- 302			

Maximum Web Forces Per Ply (lbs)

Webs	Tens.	Comp.	Webs	Tens.	Comp.
C - T	331	- 783	F - P	426	- 174
T - D	797	- 3231	H - O	637	- 90
D - R	421	- 50	O - I	185	- 431
F - Q	411	- 58	J - M	529	- 2565

Lumber

Top chord: 2x4 SP #2;
Bot chord: 2x4 SP #2;
Webs: 2x4 SP #3;

Bracing

(a) Continuous lateral restraint equally spaced on member.

Plating Notes

All plates are 2X4 except as noted.

Loading

Truss passed check for 20 psf additional bottom chord live load in areas with 42"-high x 24"-wide clearance.

Wind

Wind loads based on MWFRS with additional C&C member design.

Right end vertical not exposed to wind pressure.

Wind loading based on both gable and hip roof types.

Additional Notes

WARNING: Furnish a copy of this DWG to the installation contractor. Special care must be taken during handling, shipping and installation of trusses. See "WARNING" note below.

Refer to DWG PB160160118 for piggyback details.

YOONHWAK KIM
LICENSE
No. 86367
STATE OF
FLORIDA
PROFESSIONAL ENGINEER

FL REG# 278, Yoonhwak Kim, FL PE #86367
07/01/2021

****WARNING**** READ AND FOLLOW ALL NOTES ON THIS DRAWING!
****IMPORTANT**** FURNISH THIS DRAWING TO ALL CONTRACTORS INCLUDING THE INSTALLERS

Trusses require extreme care in fabricating, handling, shipping, installing and bracing. Refer to and follow the latest edition of BCSI (Building Component Safety Information, by TPI and SBCA) for safety practices prior to performing these functions. Installers shall provide temporary bracing per BCSI. Unless noted otherwise, top chord shall have properly attached structural sheathing and bottom chord shall have a properly attached rigid ceiling. Locations shown for permanent lateral restraint of webs shall have bracing installed per BCSI sections B3, B7, or B10, as applicable. Apply plates to each face of truss and position as shown above and on the Joint Details, unless noted otherwise. Refer to drawings 160A-Z for standard plate positions. Refer to job's General Notes page for additional information.

Alpine, a division of ITW Building Components Group Inc. shall not be responsible for any deviation from this drawing, any failure to build the truss in conformance with ANSI/TPI 1, or for handling, shipping, installation and bracing of trusses. A seal on this drawing or cover page listing this drawing, indicates acceptance of professional engineering responsibility solely for the design shown. The suitability and use of this drawing for any structure is the responsibility of the Building Designer per ANSI/TPI 1 Sec.2.

For more information see these web sites: Alpine: alpineitw.com; TPI: tpinst.org; SBCA: sbcindustry.com; ICC: iccsafe.org; AWC: awc.org

ALPINE AN ITW COMPANY
6750 Forum Drive
Suite 305
Orlando FL, 32821

SEQN: 626758 COMN	Ply: 2	**Job Number:** 21-5719	Cust: R 215 JRef:1X6P2150009 T44
FROM: CDM	Qty: 1	Jones/Freeman	DrwNo: 182.21.1414.03733
Page 1 of 2		**Truss Label:** B10	/ YK 07/01/2021

2 Complete Trusses Required

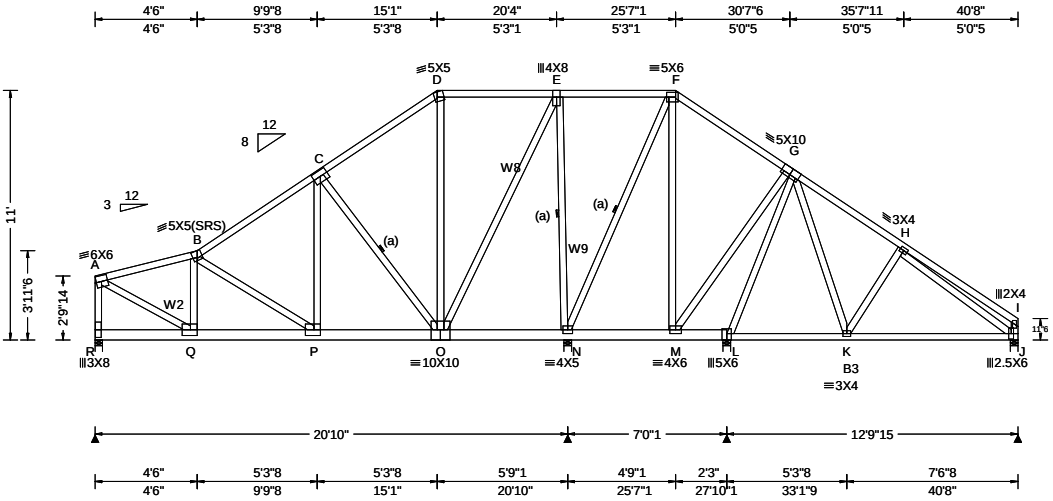

Loading Criteria (psf)

TCLL: 20.00
TCDL: 10.00
BCLL: 0.00
BCDL: 10.00
Des Ld: 40.00
NCBCLL: 0.00
Soffit: 2.00
Load Duration: 1.25
Spacing: 24.0 "

Wind Criteria

Wind Std: ASCE 7-16
Speed: 130 mph
Enclosure: Closed
Risk Category: II
EXP: C Kzt: NA
Mean Height: 17.82 ft
TCDL: 5.0 psf
BCDL: 5.0 psf
MWFRS Parallel Dist: 0 to h/2
C&C Dist a: 4.07 ft
Loc. from endwall: not in 13.00 ft
GCpi: 0.18
Wind Duration: 1.60

Snow Criteria (Pg,Pf in PSF)

Pg: NA Ct: NA CAT: NA
Pf: NA Ce: NA
Lu: NA Cs: NA
Snow Duration: NA

Building Code:
FBC 7th Ed. 2020 Res.
TPI Std: 2014
Rep Fac: No
FT/RT:20(0)/10(0)
Plate Type(s):
WAVE

Defl/CSI Criteria

PP Deflection in	loc	L/defl	L/#
VERT(LL): 0.094	P	999	240
VERT(CL): 0.186	P	999	180
HORZ(LL): 0.027	B	-	-
HORZ(TL): 0.054	B	-	-

Creep Factor: 2.0
Max TC CSI: 0.381
Max BC CSI: 0.493
Max Web CSI: 0.925

VIEW Ver: 21.01.01A.0521.20

▲Maximum Reactions (lbs)

Loc	Gravity R+	/ R-	/ Rh	Non-Gravity / Rw	/ U	/ RL
R	5910	/-	/-	/-	/747	/-
N	10017	/-	/-	/-	/677	/-
L	1847	/-	/-	/-	/173	/-
J	-	/-284	/-	/-	/16	/-

Wind reactions based on MWFRS
R Brg Width = 4.0 Min Req = 2.4
N Brg Width = 4.0 Min Req = 3.8
L Brg Width = 4.0 Min Req = 1.5
J Brg Width = 4.0 Min Req = 1.5
Bearings R, N, L, & J are a rigid surface.
Members not listed have forces less than 375#

Maximum Top Chord Forces Per Ply (lbs)

Chords	Tens.	Comp.	Chords	Tens.	Comp.
A - B	347	- 3059	D - E	67	- 758
B - C	292	- 2504	E - F	758	- 95
C - D	90	- 929	F - G	417	- 84

Maximum Bot Chord Forces Per Ply (lbs)

Chords	Tens.	Comp.	Chords	Tens.	Comp.
Q - P	2964	- 335	O - N	79	- 621
P - O	1996	- 227	M - L	53	- 598

Maximum Web Forces Per Ply (lbs)

Webs	Tens.	Comp.	Webs	Tens.	Comp.
A - R	299	- 2503	O - E	3125	- 336
A - Q	3399	- 379	E - N	341	- 2923
B - P	122	- 1092	N - F	85	- 1068
P - C	2429	- 290	F - M	695	- 4
C - O	265	- 2067	M - G	468	0
D - O	448	- 15	L - G	48	- 767

Lumber

Top chord: 2x4 SP #2;
Bot chord: 2x6 SP 2400f-2.0E; B3 2x4 SP #2;
Webs: 2x4 SP #3; W2,W8 2x4 SP #2;
W9 2x4 SP M-31;

Bracing

(a) Continuous lateral restraint equally spaced on member.

Nailnote

Nail Schedule:0.128"x3", min. nails
Top Chord: 1 Row @12.00" o.c.
Bot Chord: 1 Row @ 4.00" o.c.
Webs : 1 Row @ 4" o.c.
Use equal spacing between rows and stagger nails in each row to avoid splitting.

Plating Notes

All plates are 6X8 except as noted.

Loading

Truss passed check for 20 psf additional bottom chord live load in areas with 42"-high x 24"-wide clearance.

Wind

Wind loads and reactions based on MWFRS.

End verticals not exposed to wind pressure.

Wind loading based on both gable and hip roof types.

Additional Notes

Negative reaction(s) of -284# MAX. from a non-wind load case requires uplift connection. See Maximum Reactions.

Refer to DWG PB160160118 for piggyback details.

YOONHWAK KIM
LICENSE
No. 86367
STATE OF
FLORIDA
PROFESSIONAL ENGINEER

FL REG# 278, Yoonhwak Kim, FL PE #86367
07/01/2021

****WARNING**** READ AND FOLLOW ALL NOTES ON THIS DRAWING!
****IMPORTANT**** FURNISH THIS DRAWING TO ALL CONTRACTORS INCLUDING THE INSTALLERS

Trusses require extreme care in fabricating, handling, shipping, installing and bracing. Refer to and follow the latest edition of BCSI (Building Component Safety Information, by TPI and SBCA) for safety practices prior to performing these functions. Installers shall provide temporary bracing per BCSI. Unless noted otherwise, top chord shall have properly attached structural sheathing and bottom chord shall have a properly attached rigid ceiling. Locations shown for permanent lateral restraint of webs shall have bracing installed per BCSI sections B3, B7, or B10, as applicable. Apply plates to each face of truss and position as shown above and on the Joint Details, unless noted otherwise. Refer to drawings 160A-Z for standard plate positions. Refer to job's General Notes page for additional information.

Alpine, a division of ITW Building Components Group Inc. shall not be responsible for any deviation from this drawing, any failure to build the truss in conformance with ANSI/TPI 1, or for handling, shipping, installation and bracing of trusses. A seal on this drawing or cover page listing this drawing, indicates acceptance of professional engineering responsibility solely for the design shown. The suitability and use of this drawing for any structure is the responsibility of the Building Designer per ANSI/TPI 1 Sec.2.

For more information see these web sites: Alpine: alpineitw.com; TPI: tpinst.org; SBCA: sbcindustry.com; ICC: iccsafe.org; AWC: awc.org

ALPINE AN ITW COMPANY
6750 Forum Drive
Suite 305
Orlando FL, 32821

Special Loads

------(Lumber Dur.Fac.=1.25 / Plate Dur.Fac.=1.25)

TC: From	61 plf at	0.00 to	61 plf at	4.50
TC: From	32 plf at	4.50 to	32 plf at	26.61
TC: From	64 plf at	26.61 to	64 plf at	40.67
BC: From	10 plf at	0.00 to	10 plf at	27.84
BC: From	20 plf at	27.84 to	20 plf at	40.67
PLB: From	20 plf at	9.94 to	20 plf at	12.24
PLB: From	20 plf at	17.23 to	20 plf at	20.47
PLB: From	20 plf at	22.52 to	20 plf at	25.30
PLB: From	20 plf at	29.54 to	20 plf at	31.82

BC: 1109 lb Conc. Load at 1.06
BC: 1172 lb Conc. Load at 3.06
BC: 1152 lb Conc. Load at 5.06
BC: 1104 lb Conc. Load at 6.61, 8.61
BC: 1255 lb Conc. Load at 10.61
BC: 1287 lb Conc. Load at 12.61
BC: 1271 lb Conc. Load at 14.61
BC: 1315 lb Conc. Load at 16.61
BC: 405 lb Conc. Load at 18.61
BC: 314 lb Conc. Load at 20.61
BC: 1210 lb Conc. Load at 22.61,24.61
BC: 1160 lb Conc. Load at 26.61

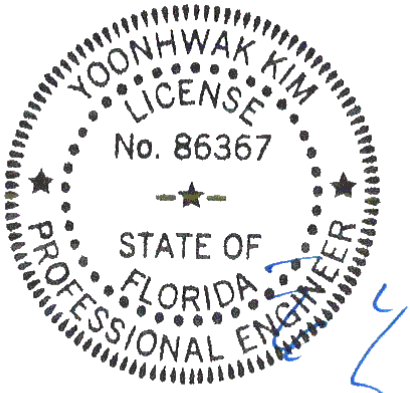

FL REG# 278, Yoonhwak Kim, FL PE #86367
07/01/2021

****WARNING**** READ AND FOLLOW ALL NOTES ON THIS DRAWING!
****IMPORTANT**** FURNISH THIS DRAWING TO ALL CONTRACTORS INCLUDING THE INSTALLERS

Trusses require extreme care in fabricating, handling, shipping, installing and bracing. Refer to and follow the latest edition of BCSI (Building Component Safety Information, by TPI and SBCA) for safety practices prior to performing these functions. Installers shall provide temporary bracing per BCSI. Unless noted otherwise, top chord shall have properly attached structural sheathing and bottom chord shall have a properly attached rigid ceiling. Locations shown for permanent lateral restraint of webs shall have bracing installed per BCSI sections B3, B7, or B10, as applicable. Apply plates to each face of truss and position as shown above and on the Joint Details, unless noted otherwise. Refer to drawings 160A-Z for standard plate positions. Refer to job's General Notes page for additional information.

Alpine, a division of ITW Building Components Group Inc. shall not be responsible for any deviation from this drawing, any failure to build the truss in conformance with ANSI/TPI 1, or for handling, shipping, installation and bracing of trusses. A seal on this drawing or cover page listing this drawing, indicates acceptance of professional engineering responsibility solely for the design shown. The suitability and use of this drawing for any structure is the responsibility of the Building Designer per ANSI/TPI 1 Sec.2.

For more information see these web sites: Alpine: alpineitw.com; TPI: tpinst.org; SBCA: sbcindustry.com; ICC: iccsafe.org; AWC: awc.org

ALPINE AN ITW COMPANY
6750 Forum Drive
Suite 305
Orlando FL, 32821

SEQN: 626984 FLAT FROM: CDM Page 1 of 2	Ply: 2 Qty: 1	**Job Number:** 21-5719 Jones/Freeman **Truss Label:** C01	Cust: R 215 JRef:1X6P2150009 T56 DrwNo: 182.21.1414.12647 / YK 07/01/2021

2 Complete Trusses Required

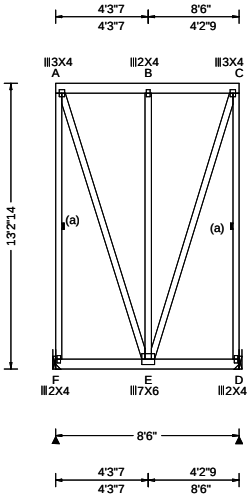

Loading Criteria (psf)

TCLL: 20.00
TCDL: 10.00
BCLL: 0.00
BCDL: 10.00
Des Ld: 40.00
NCBCLL: 0.00
Soffit: 2.00
Load Duration: 1.25
Spacing: 24.0 "

Wind Criteria

Wind Std: ASCE 7-16
Speed: 130 mph
Enclosure: Closed
Risk Category: II
EXP: C Kzt: NA
Mean Height: 23.33 ft
TCDL: 5.0 psf
BCDL: 5.0 psf
MWFRS Parallel Dist: 0 to h/2
C&C Dist a: 3.00 ft
Loc. from endwall: not in 14.50 ft
GCpi: 0.18
Wind Duration: 1.60

Snow Criteria (Pg,Pf in PSF)

Pg: NA Ct: NA CAT: NA
Pf: NA Ce: NA
Lu: NA Cs: NA
Snow Duration: NA

Building Code:
FBC 7th Ed. 2020 Res.
TPI Std: 2014
Rep Fac: No
FT/RT:20(0)/10(0)
Plate Type(s):
WAVE

Defl/CSI Criteria

PP Deflection in	loc	L/defl	L/#
VERT(LL): 0.023	B	999	240
VERT(CL): 0.045	B	999	180
HORZ(LL): 0.001	A	-	-
HORZ(TL): 0.002	A	-	-

Creep Factor: 2.0
Max TC CSI: 0.038
Max BC CSI: 0.280
Max Web CSI: 0.574

VIEW Ver: 21.01.01A.0521.20

▲Maximum Reactions (lbs)

Loc	Gravity R+	/ R-	/ Rh	Non-Gravity / Rw	/ U	/ RL
F	2505	/-	/-	/213	/-	/-
D	3386	/-	/-	/317	/-	/-

Wind reactions based on MWFRS
F Brg Width = - Min Req = -
D Brg Width = - Min Req = -
Members not listed have forces less than 375#

Maximum Web Forces Per Ply (lbs)

Webs	Tens.	Comp.	Webs	Tens.	Comp.
A - F	0	- 926	E - C	942	0
A - E	928	0	C - D	0	- 941

Lumber

Top chord: 2x6 SP 2400f-2.0E;
Bot chord: 2x6 SP 2400f-2.0E;
Webs: 2x4 SP #3;

Bracing

(a) Continuous lateral restraint equally spaced on member.

Nailnote

Nail Schedule:0.128"x3", min. nails
Top Chord: 1 Row @12.00" o.c.
Bot Chord: 2 Rows @ 4.50" o.c. (Each Row)
Webs : 1 Row @ 4" o.c.
Use equal spacing between rows and stagger nails in each row to avoid splitting.

Special Loads

------(Lumber Dur.Fac.=1.25 / Plate Dur.Fac.=1.25)

TC: From	30 plf at	0.00 to	30 plf at	8.50
BC: From	10 plf at	0.00 to	10 plf at	8.50
PLB: From	20 plf at	0.29 to	20 plf at	2.89
PLB: From	20 plf at	5.66 to	20 plf at	8.21

BC: 1362 lb Conc. Load at 1.94, 3.94, 5.94, 7.94

Loading

Truss passed check for 20 psf additional bottom chord live load in areas with 42"-high x 24"-wide clearance.

Purlins

The TC of this truss shall be braced with attached spans at 24" oc in lieu of structural sheathing.

Wind

Wind loads and reactions based on MWFRS.
End verticals not exposed to wind pressure.

Additional Notes

Truss must be installed as shown with top chord up.

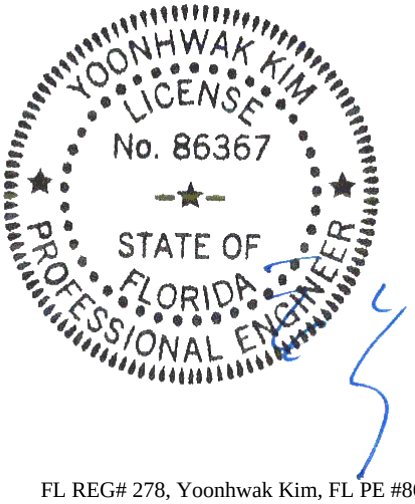

FL REG# 278, Yoonhwak Kim, FL PE #86367
07/01/2021

****WARNING**** READ AND FOLLOW ALL NOTES ON THIS DRAWING!
****IMPORTANT**** FURNISH THIS DRAWING TO ALL CONTRACTORS INCLUDING THE INSTALLERS

Trusses require extreme care in fabricating, handling, shipping, installing and bracing. Refer to and follow the latest edition of BCSI (Building Component Safety Information, by TPI and SBCA) for safety practices prior to performing these functions. Installers shall provide temporary bracing per BCSI. Unless noted otherwise, top chord shall have properly attached structural sheathing and bottom chord shall have a properly attached rigid ceiling. Locations shown for permanent lateral restraint of webs shall have bracing installed per BCSI sections B3, B7, or B10, as applicable. Apply plates to each face of truss and position as shown above and on the Joint Details, unless noted otherwise. Refer to drawings 160A-Z for standard plate positions. Refer to job's General Notes page for additional information.

Alpine, a division of ITW Building Components Group Inc. shall not be responsible for any deviation from this drawing, any failure to build the truss in conformance with ANSI/TPI 1, or for handling, shipping, installation and bracing of trusses. A seal on this drawing or cover page listing this drawing, indicates acceptance of professional engineering responsibility solely for the design shown. The suitability and use of this drawing for any structure is the responsibility of the Building Designer per ANSI/TPI 1 Sec.2.

For more information see these web sites: Alpine: alpineitw.com; TPI: tpinst.org; SBCA: sbcindustry.com; ICC: iccsafe.org; AWC: awc.org

ALPINE AN ITW COMPANY
6750 Forum Drive
Suite 305
Orlando FL, 32821

Hangers / Ties

Simpson Construction Hardware is specified based on the most current information provided by Simpson Strong-Tie. Please refer to the most recent Simpson Strong-Tie catalog for additional information.

Recommended hanger connections are based on manufacturer tested capacities and calculations. Conditions may exist that require different connections than indicated. Refer to manufacturer publication for additional information.

Hanger specified assumes connection to supporting chord is located a minimum of five times the depth of the supporting chord from any unsupported end, unless unsupported chord end has 85% plating coverage.

Bearing at location x=0' uses the following support conditions: 0'
Bearing F (0', 10'1"2) HGUS26-2
Supporting Member: (2)2x6 SP 2400f-2.0E
(20) 0.148"x3" nails into supporting member,
(6) 0.148"x3" nails into supported member.
Bearing D (8'3", 10'1"2) HGUS26-2
Supporting Member: (2)2x6 SP 2400f-2.0E
(20) 0.148"x3" nails into supporting member,
(6) 0.148"x3" nails into supported member.

YOONHWAK KIM
LICENSE
No. 86367
STATE OF
FLORIDA
PROFESSIONAL ENGINEER

FL REG# 278, Yoonhwak Kim, FL PE #86367
07/01/2021

****WARNING**** READ AND FOLLOW ALL NOTES ON THIS DRAWING!
****IMPORTANT**** FURNISH THIS DRAWING TO ALL CONTRACTORS INCLUDING THE INSTALLERS

Trusses require extreme care in fabricating, handling, shipping, installing and bracing. Refer to and follow the latest edition of BCSI (Building Component Safety Information, by TPI and SBCA) for safety practices prior to performing these functions. Installers shall provide temporary bracing per BCSI. Unless noted otherwise, top chord shall have properly attached structural sheathing and bottom chord shall have a properly attached rigid ceiling. Locations shown for permanent lateral restraint of webs shall have bracing installed per BCSI sections B3, B7, or B10, as applicable. Apply plates to each face of truss and position as shown above and on the Joint Details, unless noted otherwise. Refer to drawings 160A-Z for standard plate positions. Refer to job's General Notes page for additional information.

Alpine, a division of ITW Building Components Group Inc. shall not be responsible for any deviation from this drawing, any failure to build the truss in conformance with ANSI/TPI 1, or for handling, shipping, installation and bracing of trusses. A seal on this drawing or cover page listing this drawing, indicates acceptance of professional engineering responsibility solely for the design shown. The suitability and use of this drawing for any structure is the responsibility of the Building Designer per ANSI/TPI 1 Sec.2.

For more information see these web sites: Alpine: alpineitw.com; TPI: tpinst.org; SBCA: sbcindustry.com; ICC: iccsafe.org; AWC: awc.org

ALPINE AN ITW COMPANY
6750 Forum Drive
Suite 305
Orlando FL, 32821

SEQN: 626532 HIP_ FROM: CDM	Ply: 1 Qty: 1	**Job Number:** 21-5719 Jones/Freeman **Truss Label:** HJ01	Cust: R 215 JRef:1X6P2150009 T25 DrwNo: 182.21.1414.16617 / YK 07/01/2021

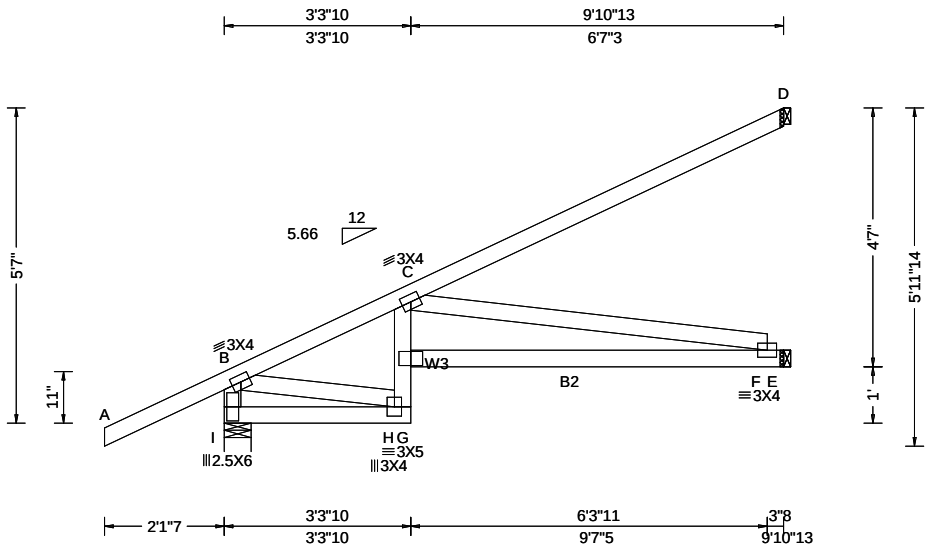

Loading Criteria (psf)	**Wind Criteria**	**Snow Criteria** (Pg,Pf in PSF)	**Defl/CSI Criteria**
TCLL: 20.00 TCDL: 10.00 BCLL: 0.00 BCDL: 10.00 Des Ld: 40.00 NCBCLL: 10.00 Soffit: 2.00 Load Duration: 1.25 Spacing: 24.0 "	Wind Std: ASCE 7-16 Speed: 130 mph Enclosure: Closed Risk Category: II EXP: C Kzt: NA Mean Height: 15.00 ft TCDL: 5.0 psf BCDL: 5.0 psf MWFRS Parallel Dist: 0 to h/2 C&C Dist a: 3.00 ft Loc. from endwall: not in 4.50 ft GCpi: 0.18 Wind Duration: 1.60	Pg: NA Ct: NA CAT: NA Pf: NA Ce: NA Lu: NA Cs: NA Snow Duration: NA Building Code: FBC 7th Ed. 2020 Res. TPI Std: 2014 Rep Fac: Varies by Ld Case FT/RT:20(0)/10(0) Plate Type(s): WAVE	PP Deflection in loc L/defl L/# VERT(LL): 0.070 C 999 240 VERT(CL): 0.141 C 843 180 HORZ(LL): 0.047 F - - HORZ(TL): 0.094 F - - Creep Factor: 2.0 Max TC CSI: 0.573 Max BC CSI: 0.397 Max Web CSI: 0.866 VIEW Ver: 21.01.01A.0521.20

▲Maximum Reactions (lbs)

	Gravity			Non-Gravity		
Loc	R+	/ R-	/ Rh	/ Rw	/ U	/ RL
I	395	/-	/-	/-	/176	/-
E	261	/-	/-	/-	/62	/-
D	184	/-	/-	/-	/76	/-

Wind reactions based on MWFRS
I Brg Width = 5.7 Min Req = 1.5
E Brg Width = 1.5 Min Req = -
D Brg Width = 1.5 Min Req = -
Bearing I is a rigid surface.
Members not listed have forces less than 375#

Maximum Top Chord Forces Per Ply (lbs)

Chords	Tens.	Comp.
B - C	245	- 568

Maximum Bot Chord Forces Per Ply (lbs)

Chords	Tens.	Comp.
G - F	995	- 397

Maximum Web Forces Per Ply (lbs)

Webs	Tens.	Comp.	Webs	Tens.	Comp.
B - I	186	- 380	C - F	403	- 1011
B - H	559	- 223			

Lumber

Top chord: 2x4 SP M-31;
Bot chord: 2x4 SP #2; B2 2x4 SP M-31;
Webs: 2x4 SP #3; W3 2x4 SP M-31;

Special Loads

------(Lumber Dur.Fac.=1.25 / Plate Dur.Fac.=1.25)

TC: From	-0 plf at	-2.12 to	62 plf at	0.00	
TC: From	2 plf at	0.00 to	2 plf at	9.90	
BC: From	0 plf at	-2.12 to	4 plf at	0.00	
BC: From	2 plf at	0.00 to	2 plf at	9.90	

TC: 12 lb Conc. Load at 1.48
TC: 184 lb Conc. Load at 4.31
TC: 316 lb Conc. Load at 7.13
BC: 40 lb Conc. Load at 1.48
BC: 47 lb Conc. Load at 4.31
BC: 131 lb Conc. Load at 7.13

Wind

Wind loads and reactions based on MWFRS.

Left end vertical not exposed to wind pressure.

Wind loading based on both gable and hip roof types.

Additional Notes

Provide (2) 16d common(0.162"x3.5") toe-nails at top chord.
Provide (2) 16d common(0.162"x3.5") toe-nails at bottom chord.

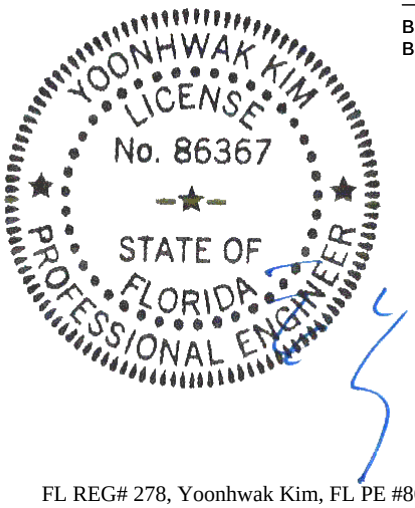

FL REG# 278, Yoonhwak Kim, FL PE #86367
07/01/2021

****WARNING**** READ AND FOLLOW ALL NOTES ON THIS DRAWING!
****IMPORTANT**** FURNISH THIS DRAWING TO ALL CONTRACTORS INCLUDING THE INSTALLERS

Trusses require extreme care in fabricating, handling, shipping, installing and bracing. Refer to and follow the latest edition of BCSI (Building Component Safety Information, by TPI and SBCA) for safety practices prior to performing these functions. Installers shall provide temporary bracing per BCSI. Unless noted otherwise, top chord shall have properly attached structural sheathing and bottom chord shall have a properly attached rigid ceiling. Locations shown for permanent lateral restraint of webs shall have bracing installed per BCSI sections B3, B7, or B10, as applicable. Apply plates to each face of truss and position as shown above and on the Joint Details, unless noted otherwise. Refer to drawings 160A-Z for standard plate positions. Refer to job's General Notes page for additional information.

Alpine, a division of ITW Building Components Group Inc. shall not be responsible for any deviation from this drawing, any failure to build the truss in conformance with ANSI/TPI 1, or for handling, shipping, installation and bracing of trusses. A seal on this drawing or cover page listing this drawing, indicates acceptance of professional engineering responsibility solely for the design shown. The suitability and use of this drawing for any structure is the responsibility of the Building Designer per ANSI/TPI 1 Sec.2.

For more information see these web sites: Alpine: alpineitw.com; TPI: tpinst.org; SBCA: sbcindustry.com; ICC: iccsafe.org; AWC: awc.org

ALPINE AN ITW COMPANY
6750 Forum Drive
Suite 305
Orlando FL, 32821

SEQN: 626762 HIP_ FROM: CDM	Ply: 1 Qty: 1	**Job Number:** 21-5719 Jones/Freeman **Truss Label:** HJ02	Cust: R 215 JRef:1X6P2150009 T34 DrwNo: 182.21.1414.19427 / YK 07/01/2021

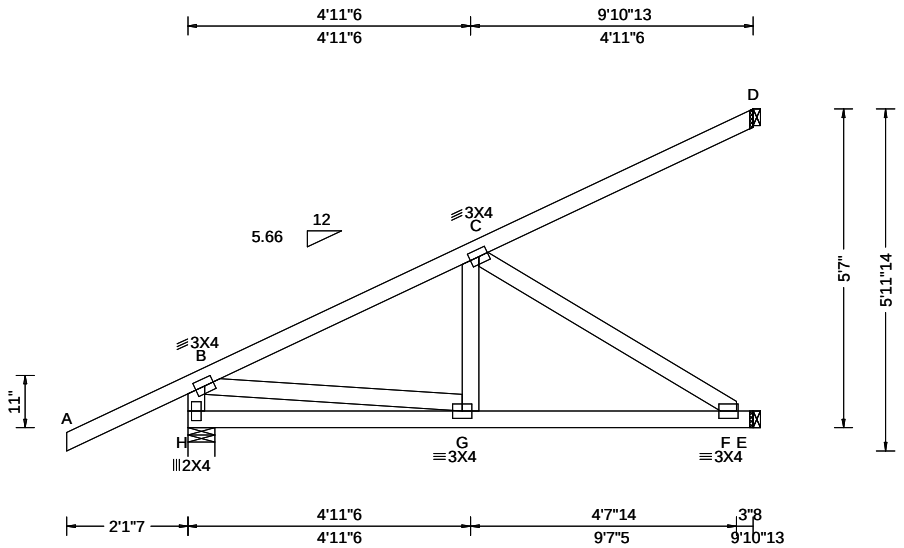

Loading Criteria (psf)

TCLL: 20.00
TCDL: 10.00
BCLL: 0.00
BCDL: 10.00
Des Ld: 40.00
NCBCLL: 10.00
Soffit: 2.00
Load Duration: 1.25
Spacing: 24.0 "

Wind Criteria

Wind Std: ASCE 7-16
Speed: 130 mph
Enclosure: Closed
Risk Category: II
EXP: C Kzt: NA
Mean Height: 15.00 ft
TCDL: 5.0 psf
BCDL: 5.0 psf
MWFRS Parallel Dist: 0 to h/2
C&C Dist a: 3.00 ft
Loc. from endwall: not in 4.50 ft
GCpi: 0.18
Wind Duration: 1.60

Snow Criteria (Pg,Pf in PSF)

Pg: NA Ct: NA CAT: NA
Pf: NA Ce: NA
Lu: NA Cs: NA
Snow Duration: NA

Building Code:
FBC 7th Ed. 2020 Res.
TPI Std: 2014
Rep Fac: Varies by Ld Case
FT/RT:20(0)/10(0)
Plate Type(s):
WAVE

Defl/CSI Criteria

PP Deflection in	loc	L/defl	L/#
VERT(LL): 0.016	G	999	240
VERT(CL): 0.031	G	999	180
HORZ(LL): 0.005	C	-	-
HORZ(TL): 0.010	C	-	-

Creep Factor: 2.0
Max TC CSI: 0.759
Max BC CSI: 0.749
Max Web CSI: 0.368

VIEW Ver: 21.01.01A.0521.20

▲Maximum Reactions (lbs)

Loc	Gravity R+	/ R-	/ Rh	Non-Gravity / Rw	/ U	/ RL
H	379	/-	/-	/-	/155	/-
E	380	/-	/-	/1	/-	/-
D	101	/-	/-	/11	/-	/-

Wind reactions based on MWFRS
H Brg Width = 5.7 Min Req = 1.5
E Brg Width = 1.5 Min Req = -
D Brg Width = 1.5 Min Req = -
Bearing H is a rigid surface.
Members not listed have forces less than 375#

Maximum Top Chord Forces Per Ply (lbs)

Chords	Tens.	Comp.
B - C	82	- 574

Maximum Bot Chord Forces Per Ply (lbs)

Chords	Tens.	Comp.
G - F	509	- 29

Maximum Web Forces Per Ply (lbs)

Webs	Tens.	Comp.	Webs	Tens.	Comp.
H - B	174	- 376	C - F	35	- 607
B - G	438	0			

Lumber

Top chord: 2x4 SP #2;
Bot chord: 2x4 SP #2;
Webs: 2x4 SP #3;

Special Loads

------(Lumber Dur.Fac.=1.25 / Plate Dur.Fac.=1.25)

TC: From	-0 plf at	-2.12 to	62 plf at	0.00
TC: From	2 plf at	0.00 to	2 plf at	9.90
BC: From	0 plf at	-2.12 to	4 plf at	0.00
BC: From	2 plf at	0.00 to	2 plf at	9.90

TC: -41 lb Conc. Load at 1.48
TC: 140 lb Conc. Load at 4.31
TC: 289 lb Conc. Load at 7.13
BC: 40 lb Conc. Load at 1.48
BC: 120 lb Conc. Load at 4.31
BC: 200 lb Conc. Load at 7.13

Wind

Wind loads and reactions based on MWFRS.
Left end vertical not exposed to wind pressure.
Wind loading based on both gable and hip roof types.

Additional Notes

Provide (2) 16d common(0.162"x3.5") toe-nails at top chord.
Provide (3) 16d common(0.162"x3.5") toe-nails at bottom chord.

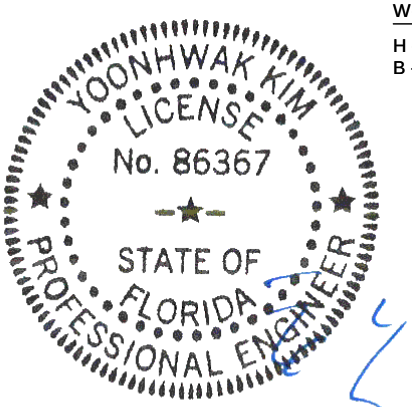

FL REG# 278, Yoonhwak Kim, FL PE #86367
07/01/2021

****WARNING**** READ AND FOLLOW ALL NOTES ON THIS DRAWING!
****IMPORTANT**** FURNISH THIS DRAWING TO ALL CONTRACTORS INCLUDING THE INSTALLERS

Trusses require extreme care in fabricating, handling, shipping, installing and bracing. Refer to and follow the latest edition of BCSI (Building Component Safety Information, by TPI and SBCA) for safety practices prior to performing these functions. Installers shall provide temporary bracing per BCSI. Unless noted otherwise, top chord shall have properly attached structural sheathing and bottom chord shall have a properly attached rigid ceiling. Locations shown for permanent lateral restraint of webs shall have bracing installed per BCSI sections B3, B7, or B10, as applicable. Apply plates to each face of truss and position as shown above and on the Joint Details, unless noted otherwise. Refer to drawings 160A-Z for standard plate positions. Refer to job's General Notes page for additional information.

Alpine, a division of ITW Building Components Group Inc. shall not be responsible for any deviation from this drawing, any failure to build the truss in conformance with ANSI/TPI 1, or for handling, shipping, installation and bracing of trusses. A seal on this drawing or cover page listing this drawing, indicates acceptance of professional engineering responsibility solely for the design shown. The suitability and use of this drawing for any structure is the responsibility of the Building Designer per ANSI/TPI 1 Sec.2.

For more information see these web sites: Alpine: alpineitw.com; TPI: tpinst.org; SBCA: sbcindustry.com; ICC: iccsafe.org; AWC: awc.org

ALPINE AN ITW COMPANY
6750 Forum Drive
Suite 305
Orlando FL, 32821

SEQN: 626520 JACK FROM: CDM	Ply: 1 Qty: 1	**Job Number:** 21-5719 Jones/Freeman **Truss Label:** J02	Cust: R 215 JRef:1X6P2150009 T27 DrwNo: 182.21.1414.21117 / YK 07/01/2021

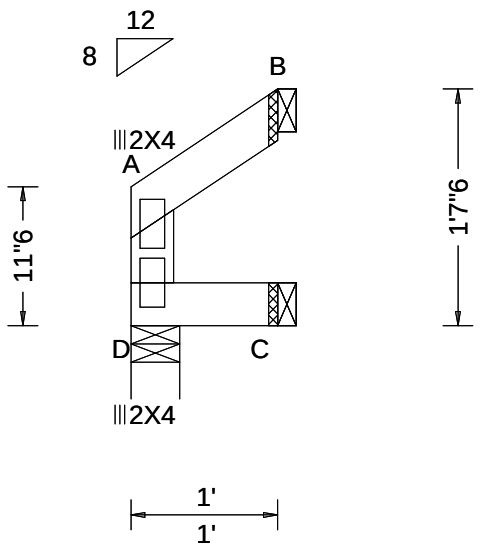

Loading Criteria (psf)

TCLL: 20.00
TCDL: 10.00
BCLL: 0.00
BCDL: 10.00
Des Ld: 40.00
NCBCLL: 10.00
Soffit: 2.00
Load Duration: 1.25
Spacing: 24.0 "

Wind Criteria

Wind Std: ASCE 7-16
Speed: 130 mph
Enclosure: Closed
Risk Category: II
EXP: C Kzt: NA
Mean Height: 15.00 ft
TCDL: 5.0 psf
BCDL: 5.0 psf
MWFRS Parallel Dist: 0 to h/2
C&C Dist a: 3.00 ft
Loc. from endwall: Any
GCpi: 0.18
Wind Duration: 1.60

Snow Criteria (Pg,Pf in PSF)

Pg: NA Ct: NA CAT: NA
Pf: NA Ce: NA
Lu: NA Cs: NA
Snow Duration: NA

Building Code:
FBC 7th Ed. 2020 Res.
TPI Std: 2014
Rep Fac: Yes
FT/RT:20(0)/10(0)
Plate Type(s):
WAVE

Defl/CSI Criteria

PP Deflection in	loc	L/defl	L/#
VERT(LL): 0.000	A	999	240
VERT(CL): 0.000	A	999	180
HORZ(LL): -0.000	A	-	-
HORZ(TL): 0.000	A	-	-

Creep Factor: 2.0
Max TC CSI: 0.024
Max BC CSI: 0.010
Max Web CSI: 0.016

VIEW Ver: 21.01.01A.0521.20

▲Maximum Reactions (lbs)

	Gravity			Non-Gravity		
Loc	R+	/ R-	/ Rh	/ Rw	/ U	/ RL
D	42	/-	/-	/31	/11	/-
C	20	/-	/-	/10	/-	/-
B	32	/-	/-	/17	/5	/22

Wind reactions based on MWFRS
D Brg Width = 4.0 Min Req = 1.5
C Brg Width = 1.5 Min Req = -
B Brg Width = 1.5 Min Req = -
Bearing D is a rigid surface.
Members not listed have forces less than 375#

Lumber

Top chord: 2x4 SP #2;
Bot chord: 2x4 SP #2;
Webs: 2x4 SP #3;

Wind

Wind loads based on MWFRS with additional C&C member design.

Left end vertical not exposed to wind pressure.

Wind loading based on both gable and hip roof types.

Additional Notes

Provide (2) 16d common(0.162"x3.5") toe-nails at top chord.
Provide (2) 16d common(0.162"x3.5") toe-nails at bottom chord.

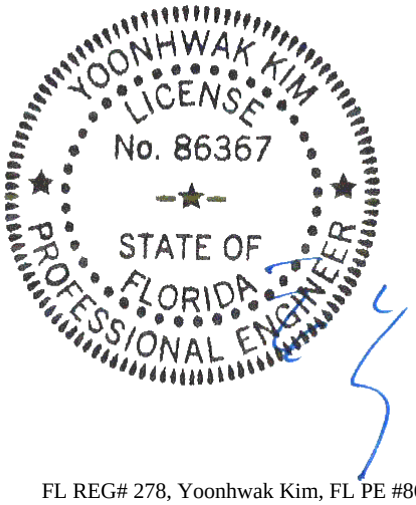

FL REG# 278, Yoonhwak Kim, FL PE #86367
07/01/2021

****WARNING**** READ AND FOLLOW ALL NOTES ON THIS DRAWING!
****IMPORTANT**** FURNISH THIS DRAWING TO ALL CONTRACTORS INCLUDING THE INSTALLERS

Trusses require extreme care in fabricating, handling, shipping, installing and bracing. Refer to and follow the latest edition of BCSI (Building Component Safety Information, by TPI and SBCA) for safety practices prior to performing these functions. Installers shall provide temporary bracing per BCSI. Unless noted otherwise, top chord shall have properly attached structural sheathing and bottom chord shall have a properly attached rigid ceiling. Locations shown for permanent lateral restraint of webs shall have bracing installed per BCSI sections B3, B7, or B10, as applicable. Apply plates to each face of truss and position as shown above and on the Joint Details, unless noted otherwise. Refer to drawings 160A-Z for standard plate positions. Refer to job's General Notes page for additional information.

Alpine, a division of ITW Building Components Group Inc. shall not be responsible for any deviation from this drawing, any failure to build the truss in conformance with ANSI/TPI 1, or for handling, shipping, installation and bracing of trusses. A seal on this drawing or cover page listing this drawing, indicates acceptance of professional engineering responsibility solely for the design shown. The suitability and use of this drawing for any structure is the responsibility of the Building Designer per ANSI/TPI 1 Sec.2.

For more information see these web sites: Alpine: alpineitw.com; TPI: tpinst.org; SBCA: sbcindustry.com; ICC: iccsafe.org; AWC: awc.org

ALPINE AN ITW COMPANY
6750 Forum Drive
Suite 305
Orlando FL, 32821

SEQN: 626517 JACK FROM: CDM	Ply: 1 Qty: 1	**Job Number:** 21-5719 Jones/Freeman **Truss Label:** J03	Cust: R 215 JRef:1X6P2150009 T45 DrwNo: 182.21.1414.23373 / YK 07/01/2021

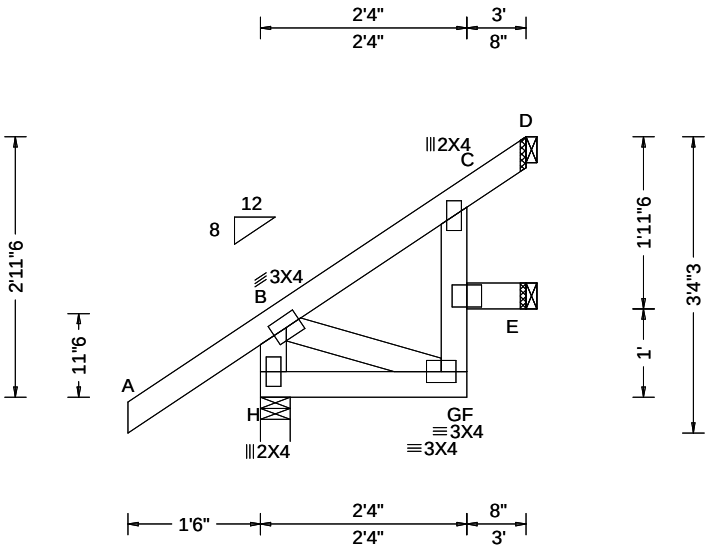

Loading Criteria (psf)	**Wind Criteria**	**Snow Criteria** (Pg,Pf in PSF)	**Defl/CSI Criteria**
TCLL: 20.00 TCDL: 10.00 BCLL: 0.00 BCDL: 10.00 Des Ld: 40.00 NCBCLL: 10.00 Soffit: 2.00 Load Duration: 1.25 Spacing: 24.0 "	Wind Std: ASCE 7-16 Speed: 130 mph Enclosure: Closed Risk Category: II EXP: C Kzt: NA Mean Height: 15.00 ft TCDL: 5.0 psf BCDL: 5.0 psf MWFRS Parallel Dist: h to 2h C&C Dist a: 3.00 ft Loc. from endwall: not in 9.00 ft GCpi: 0.18 Wind Duration: 1.60	Pg: NA Ct: NA CAT: NA Pf: NA Ce: NA Lu: NA Cs: NA Snow Duration: NA Building Code: FBC 7th Ed. 2020 Res. TPI Std: 2014 Rep Fac: Yes FT/RT:20(0)/10(0) Plate Type(s): WAVE	PP Deflection in loc L/defl L/# VERT(LL): 0.004 F 999 240 VERT(CL): 0.008 F 999 180 HORZ(LL): 0.003 C - - HORZ(TL): 0.007 C - - Creep Factor: 2.0 Max TC CSI: 0.240 Max BC CSI: 0.054 Max Web CSI: 0.069 VIEW Ver: 21.01.01A.0521.20

▲Maximum Reactions (lbs)

	Gravity			Non-Gravity		
Loc	R+	/ R-	/ Rh	/ Rw	/ U	/ RL
H	255	/-	/-	/177	/6	/69
E	22	/-	/-	/16	/2	/-
D	83	/-	/-	/72	/31	/-

Wind reactions based on MWFRS
H Brg Width = 4.0 Min Req = 1.5
E Brg Width = 1.5 Min Req = -
D Brg Width = 1.5 Min Req = -
Bearing H is a rigid surface.
Members not listed have forces less than 375#

Lumber

Top chord: 2x4 SP #2;
Bot chord: 2x4 SP #2;
Webs: 2x4 SP #3;

Wind

Wind loads based on MWFRS with additional C&C member design.

Left end vertical not exposed to wind pressure.

Wind loading based on both gable and hip roof types.

Additional Notes

Provide (2) 16d common(0.162"x3.5") toe-nails at top chord.
Provide (2) 16d common(0.162"x3.5") toe-nails at bottom chord.

FL REG# 278, Yoonhwak Kim, FL PE #86367
07/01/2021

****WARNING**** READ AND FOLLOW ALL NOTES ON THIS DRAWING!
****IMPORTANT**** FURNISH THIS DRAWING TO ALL CONTRACTORS INCLUDING THE INSTALLERS

Trusses require extreme care in fabricating, handling, shipping, installing and bracing. Refer to and follow the latest edition of BCSI (Building Component Safety Information, by TPI and SBCA) for safety practices prior to performing these functions. Installers shall provide temporary bracing per BCSI. Unless noted otherwise, top chord shall have properly attached structural sheathing and bottom chord shall have a properly attached rigid ceiling. Locations shown for permanent lateral restraint of webs shall have bracing installed per BCSI sections B3, B7, or B10, as applicable. Apply plates to each face of truss and position as shown above and on the Joint Details, unless noted otherwise. Refer to drawings 160A-Z for standard plate positions. Refer to job's General Notes page for additional information.

Alpine, a division of ITW Building Components Group Inc. shall not be responsible for any deviation from this drawing, any failure to build the truss in conformance with ANSI/TPI 1, or for handling, shipping, installation and bracing of trusses. A seal on this drawing or cover page listing this drawing, indicates acceptance of professional engineering responsibility solely for the design shown. The suitability and use of this drawing for any structure is the responsibility of the Building Designer per ANSI/TPI 1 Sec.2.

For more information see these web sites: Alpine: alpineitw.com; TPI: tpinst.org; SBCA: sbcindustry.com; ICC: iccsafe.org; AWC: awc.org

ALPINE AN ITW COMPANY
6750 Forum Drive
Suite 305
Orlando FL, 32821

SEQN: 626522 JACK FROM: CDM	Ply: 1 Qty: 1	**Job Number:** 21-5719 Jones/Freeman **Truss Label:** J04	Cust: R 215 JRef:1X6P2150009 T3 DrwNo: 182.21.1414.24683 / YK 07/01/2021

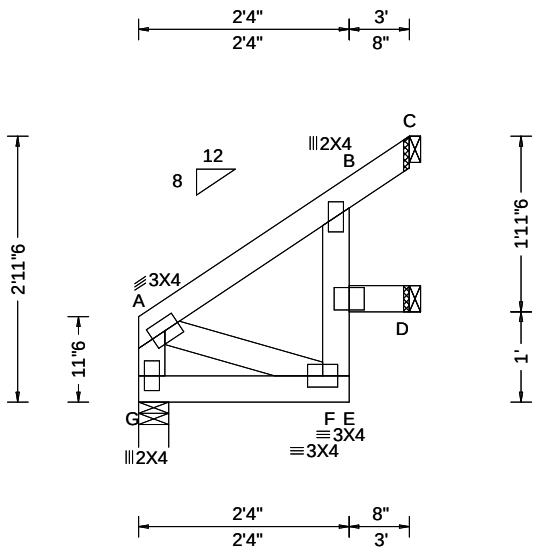

Loading Criteria (psf)
TCLL: 20.00
TCDL: 10.00
BCLL: 0.00
BCDL: 10.00
Des Ld: 40.00
NCBCLL: 10.00
Soffit: 2.00
Load Duration: 1.25
Spacing: 24.0 "

Wind Criteria
Wind Std: ASCE 7-16
Speed: 130 mph
Enclosure: Closed
Risk Category: II
EXP: C Kzt: NA
Mean Height: 15.00 ft
TCDL: 5.0 psf
BCDL: 5.0 psf
MWFRS Parallel Dist: 0 to h/2
C&C Dist a: 3.00 ft
Loc. from endwall: not in 4.50 ft
GCpi: 0.18
Wind Duration: 1.60

Snow Criteria (Pg,Pf in PSF)
Pg: NA Ct: NA CAT: NA
Pf: NA Ce: NA
Lu: NA Cs: NA
Snow Duration: NA

Building Code:
FBC 7th Ed. 2020 Res.
TPI Std: 2014
Rep Fac: Yes
FT/RT:20(0)/10(0)
Plate Type(s):
WAVE

Defl/CSI Criteria

PP Deflection in	loc	L/defl	L/#
VERT(LL): 0.006	E	999	240
VERT(CL): 0.013	E	999	180
HORZ(LL): 0.006	B	-	-
HORZ(TL): 0.012	B	-	-

Creep Factor: 2.0
Max TC CSI: 0.175
Max BC CSI: 0.055
Max Web CSI: 0.043

VIEW Ver: 21.01.01A.0521.20

▲Maximum Reactions (lbs)

	Gravity			Non-Gravity		
Loc	R+	/ R-	/ Rh	/ Rw	/ U	/ RL
G	126	/-	/-	/71	/-	/69
D	25	/-	/-	/21	/6	/-
C	102	/-	/-	/84	/52	/-

Wind reactions based on MWFRS
G Brg Width = 4.0 Min Req = 1.5
D Brg Width = 1.5 Min Req = -
C Brg Width = 1.5 Min Req = -
Bearing G is a rigid surface.
Members not listed have forces less than 375#

Lumber

Top chord: 2x4 SP #2;
Bot chord: 2x4 SP #2;
Webs: 2x4 SP #3;

Wind

Wind loads based on MWFRS with additional C&C member design.

Left end vertical not exposed to wind pressure.

Wind loading based on both gable and hip roof types.

Additional Notes

Provide (2) 16d common(0.162"x3.5") toe-nails at top chord.
Provide (2) 16d common(0.162"x3.5") toe-nails at bottom chord.

FL REG# 278, Yoonhwak Kim, FL PE #86367
07/01/2021

****WARNING**** READ AND FOLLOW ALL NOTES ON THIS DRAWING!
****IMPORTANT**** FURNISH THIS DRAWING TO ALL CONTRACTORS INCLUDING THE INSTALLERS

Trusses require extreme care in fabricating, handling, shipping, installing and bracing. Refer to and follow the latest edition of BCSI (Building Component Safety Information, by TPI and SBCA) for safety practices prior to performing these functions. Installers shall provide temporary bracing per BCSI. Unless noted otherwise, top chord shall have properly attached structural sheathing and bottom chord shall have a properly attached rigid ceiling. Locations shown for permanent lateral restraint of webs shall have bracing installed per BCSI sections B3, B7, or B10, as applicable. Apply plates to each face of truss and position as shown above and on the Joint Details, unless noted otherwise. Refer to drawings 160A-Z for standard plate positions. Refer to job's General Notes page for additional information.

Alpine, a division of ITW Building Components Group Inc. shall not be responsible for any deviation from this drawing, any failure to build the truss in conformance with ANSI/TPI 1, or for handling, shipping, installation and bracing of trusses. A seal on this drawing or cover page listing this drawing, indicates acceptance of professional engineering responsibility solely for the design shown. The suitability and use of this drawing for any structure is the responsibility of the Building Designer per ANSI/TPI 1 Sec.2.

For more information see these web sites: Alpine: alpineitw.com; TPI: tpinst.org; SBCA: sbcindustry.com; ICC: iccsafe.org; AWC: awc.org

ALPINE AN ITW COMPANY
6750 Forum Drive
Suite 305
Orlando FL, 32821

SEQN: 626526 JACK FROM: CDM	Ply: 1 Qty: 1	**Job Number:** 21-5719 Jones/Freeman **Truss Label:** J05	Cust: R 215 JRef:1X6P2150009 T46 DrwNo: 182.21.1414.26117 / YK 07/01/2021

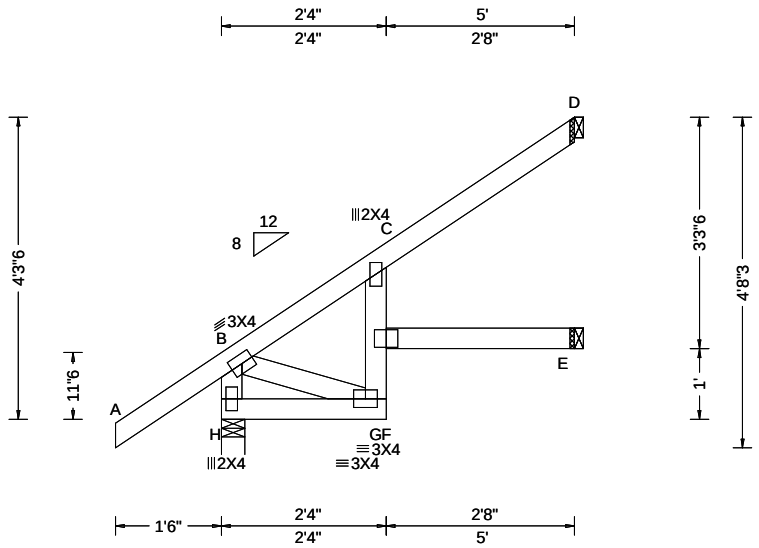

Loading Criteria (psf)	**Wind Criteria**	**Snow Criteria** (Pg,Pf in PSF)	**Defl/CSI Criteria**
TCLL: 20.00 TCDL: 10.00 BCLL: 0.00 BCDL: 10.00 Des Ld: 40.00 NCBCLL: 10.00 Soffit: 2.00 Load Duration: 1.25 Spacing: 24.0 "	Wind Std: ASCE 7-16 Speed: 130 mph Enclosure: Closed Risk Category: II EXP: C Kzt: NA Mean Height: 15.00 ft TCDL: 5.0 psf BCDL: 5.0 psf MWFRS Parallel Dist: h to 2h C&C Dist a: 3.00 ft Loc. from endwall: not in 9.00 ft GCpi: 0.18 Wind Duration: 1.60	Pg: NA Ct: NA CAT: NA Pf: NA Ce: NA Lu: NA Cs: NA Snow Duration: NA Building Code: FBC 7th Ed. 2020 Res. TPI Std: 2014 Rep Fac: Yes FT/RT:20(0)/10(0) Plate Type(s): WAVE	PP Deflection in loc L/defl L/# VERT(LL): 0.060 F 993 240 VERT(CL): 0.122 F 493 180 HORZ(LL): 0.056 C - - HORZ(TL): 0.113 C - - Creep Factor: 2.0 Max TC CSI: 0.522 Max BC CSI: 0.124 Max Web CSI: 0.128 VIEW Ver: 21.01.01A.0521.20

▲Maximum Reactions (lbs)

	Gravity			Non-Gravity		
Loc	R+	/ R-	/ Rh	/ Rw	/ U	/ RL
H	329	/-	/-	/222	/-	/104
E	65	/-	/-	/40	/-	/-
D	152	/-	/-	/121	/56	/-

Wind reactions based on MWFRS
H Brg Width = 4.0 Min Req = 1.5
E Brg Width = 1.5 Min Req = -
D Brg Width = 1.5 Min Req = -
Bearing H is a rigid surface.
Members not listed have forces less than 375#

Lumber

Top chord: 2x4 SP #2;
Bot chord: 2x4 SP #2;
Webs: 2x4 SP #3;

Wind

Wind loads based on MWFRS with additional C&C member design.

Left end vertical not exposed to wind pressure.

Wind loading based on both gable and hip roof types.

Additional Notes

Provide (2) 16d common(0.162"x3.5") toe-nails at top chord.
Provide (2) 16d common(0.162"x3.5") toe-nails at bottom chord.

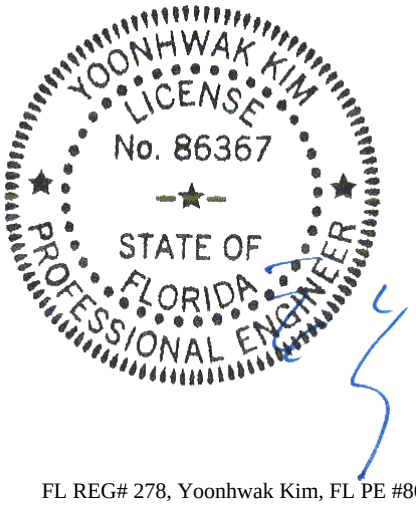

FL REG# 278, Yoonhwak Kim, FL PE #86367
07/01/2021

****WARNING**** READ AND FOLLOW ALL NOTES ON THIS DRAWING!
****IMPORTANT**** FURNISH THIS DRAWING TO ALL CONTRACTORS INCLUDING THE INSTALLERS

Trusses require extreme care in fabricating, handling, shipping, installing and bracing. Refer to and follow the latest edition of BCSI (Building Component Safety Information, by TPI and SBCA) for safety practices prior to performing these functions. Installers shall provide temporary bracing per BCSI. Unless noted otherwise, top chord shall have properly attached structural sheathing and bottom chord shall have a properly attached rigid ceiling. Locations shown for permanent lateral restraint of webs shall have bracing installed per BCSI sections B3, B7, or B10, as applicable. Apply plates to each face of truss and position as shown above and on the Joint Details, unless noted otherwise. Refer to drawings 160A-Z for standard plate positions. Refer to job's General Notes page for additional information.

Alpine, a division of ITW Building Components Group Inc. shall not be responsible for any deviation from this drawing, any failure to build the truss in conformance with ANSI/TPI 1, or for handling, shipping, installation and bracing of trusses. A seal on this drawing or cover page listing this drawing, indicates acceptance of professional engineering responsibility solely for the design shown. The suitability and use of this drawing for any structure is the responsibility of the Building Designer per ANSI/TPI 1 Sec.2.

For more information see these web sites: Alpine: alpineitw.com; TPI: tpinst.org; SBCA: sbcindustry.com; ICC: iccsafe.org; AWC: awc.org

ALPINE AN ITW COMPANY
6750 Forum Drive
Suite 305
Orlando FL, 32821

SEQN: 626524 JACK FROM: CDM	Ply: 1 Qty: 1	**Job Number:** 21-5719 Jones/Freeman **Truss Label:** J06	Cust: R 215 JRef:1X6P2150009 T19 DrwNo: 182.21.1414.27437 / YK 07/01/2021

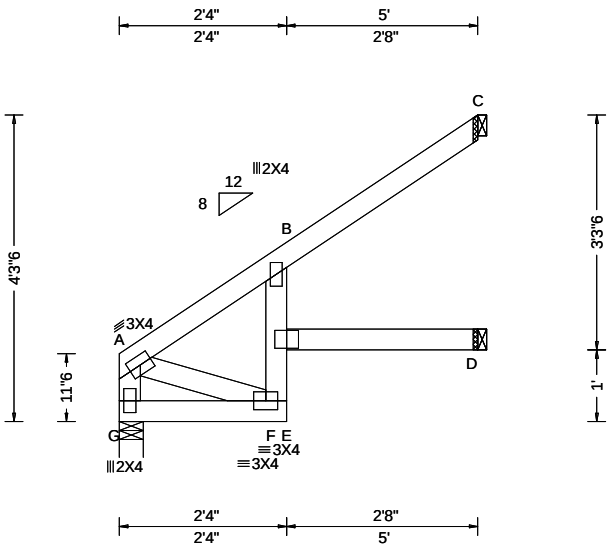

Loading Criteria (psf)

TCLL: 20.00
TCDL: 10.00
BCLL: 0.00
BCDL: 10.00
Des Ld: 40.00
NCBCLL: 10.00
Soffit: 2.00
Load Duration: 1.25
Spacing: 24.0 "

Wind Criteria

Wind Std: ASCE 7-16
Speed: 130 mph
Enclosure: Closed
Risk Category: II
EXP: C Kzt: NA
Mean Height: 15.00 ft
TCDL: 5.0 psf
BCDL: 5.0 psf
MWFRS Parallel Dist: 0 to h/2
C&C Dist a: 3.00 ft
Loc. from endwall: not in 4.50 ft
GCpi: 0.18
Wind Duration: 1.60

Snow Criteria (Pg,Pf in PSF)

Pg: NA Ct: NA CAT: NA
Pf: NA Ce: NA
Lu: NA Cs: NA
Snow Duration: NA

Building Code:
FBC 7th Ed. 2020 Res.
TPI Std: 2014
Rep Fac: Yes
FT/RT:20(0)/10(0)
Plate Type(s):
WAVE

Defl/CSI Criteria

PP Deflection in	loc	L/defl	L/#
VERT(LL): 0.070	E	855	240
VERT(CL): 0.147	E	407	180
HORZ(LL): 0.065	B	-	-
HORZ(TL): 0.137	B	-	-

Creep Factor: 2.0
Max TC CSI: 0.556
Max BC CSI: 0.132
Max Web CSI: 0.145

VIEW Ver: 21.01.01A.0521.20

▲Maximum Reactions (lbs)

Loc	Gravity R+	/ R-	/ Rh	Non-Gravity / Rw	/ U	/ RL
G	210	/-	/-	/124	/-	/116
D	66	/-	/-	/43	/-	/-
C	164	/-	/-	/129	/90	/-

Wind reactions based on MWFRS
G Brg Width = 4.0 Min Req = 1.5
D Brg Width = 1.5 Min Req = -
C Brg Width = 1.5 Min Req = -
Bearing G is a rigid surface.
Members not listed have forces less than 375#

Lumber

Top chord: 2x4 SP #2;
Bot chord: 2x4 SP #2;
Webs: 2x4 SP #3;

Wind

Wind loads based on MWFRS with additional C&C member design.

Left end vertical not exposed to wind pressure.

Wind loading based on both gable and hip roof types.

Additional Notes

Provide (2) 16d common(0.162"x3.5") toe-nails at top chord.
Provide (2) 16d common(0.162"x3.5") toe-nails at bottom chord.

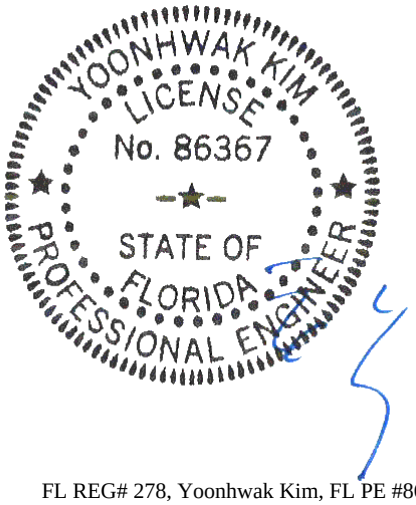

FL REG# 278, Yoonhwak Kim, FL PE #86367
07/01/2021

****WARNING**** READ AND FOLLOW ALL NOTES ON THIS DRAWING!
****IMPORTANT**** FURNISH THIS DRAWING TO ALL CONTRACTORS INCLUDING THE INSTALLERS

Trusses require extreme care in fabricating, handling, shipping, installing and bracing. Refer to and follow the latest edition of BCSI (Building Component Safety Information, by TPI and SBCA) for safety practices prior to performing these functions. Installers shall provide temporary bracing per BCSI. Unless noted otherwise, top chord shall have properly attached structural sheathing and bottom chord shall have a properly attached rigid ceiling. Locations shown for permanent lateral restraint of webs shall have bracing installed per BCSI sections B3, B7, or B10, as applicable. Apply plates to each face of truss and position as shown above and on the Joint Details, unless noted otherwise. Refer to drawings 160A-Z for standard plate positions. Refer to job's General Notes page for additional information.

Alpine, a division of ITW Building Components Group Inc. shall not be responsible for any deviation from this drawing, any failure to build the truss in conformance with ANSI/TPI 1, or for handling, shipping, installation and bracing of trusses. A seal on this drawing or cover page listing this drawing, indicates acceptance of professional engineering responsibility solely for the design shown. The suitability and use of this drawing for any structure is the responsibility of the Building Designer per ANSI/TPI 1 Sec.2.

For more information see these web sites: Alpine: alpineitw.com; TPI: tpinst.org; SBCA: sbcindustry.com; ICC: iccsafe.org; AWC: awc.org

ALPINE AN ITW COMPANY
6750 Forum Drive
Suite 305
Orlando FL, 32821

SEQN: 626528 EJAC FROM: CDM	Ply: 1 Qty: 5	**Job Number:** 21-5719 Jones/Freeman **Truss Label:** J07	Cust: R 215 JRef:1X6P2150009 T32 DrwNo: 182.21.1414.28717 / YK 07/01/2021

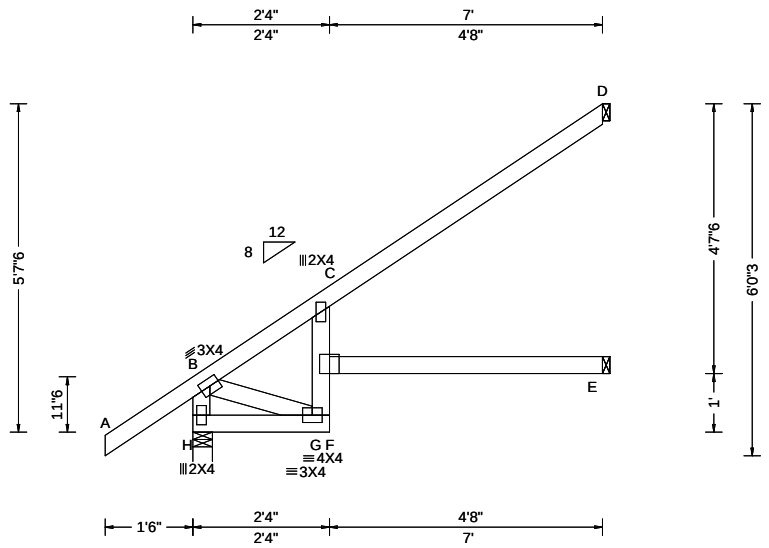

Loading Criteria (psf)	**Wind Criteria**	**Snow Criteria** (Pg,Pf in PSF)	**Defl/CSI Criteria**
TCLL: 20.00 TCDL: 10.00 BCLL: 0.00 BCDL: 10.00 Des Ld: 40.00 NCBCLL: 10.00 Soffit: 2.00 Load Duration: 1.25 Spacing: 24.0 "	Wind Std: ASCE 7-16 Speed: 130 mph Enclosure: Closed Risk Category: II EXP: C Kzt: NA Mean Height: 15.00 ft TCDL: 5.0 psf BCDL: 5.0 psf MWFRS Parallel Dist: h/2 to h C&C Dist a: 3.00 ft Loc. from endwall: not in 9.00 ft GCpi: 0.18 Wind Duration: 1.60	Pg: NA Ct: NA CAT: NA Pf: NA Ce: NA Lu: NA Cs: NA Snow Duration: NA Building Code: FBC 7th Ed. 2020 Res. TPI Std: 2014 Rep Fac: Yes FT/RT:20(0)/10(0) Plate Type(s): WAVE	PP Deflection in loc L/defl L/# VERT(LL): 0.206 F 408 240 VERT(CL): 0.418 F 200 180 HORZ(LL): 0.191 C - - HORZ(TL): 0.389 C - - Creep Factor: 2.0 Max TC CSI: 0.995 Max BC CSI: 0.359 Max Web CSI: 0.252 VIEW Ver: 21.01.01A.0521.20

▲Maximum Reactions (lbs)

	Gravity			Non-Gravity		
Loc	R+	/ R-	/ Rh	/ Rw	/ U	/ RL
H	408	/-	/-	/272	/1	/192
E	108	/-	/-	/65	/-	/-
D	214	/-	/-	/165	/124	/-

Wind reactions based on MWFRS
H Brg Width = 4.0 Min Req = 1.5
E Brg Width = 1.5 Min Req = -
D Brg Width = 1.5 Min Req = -
Bearing H is a rigid surface.
Members not listed have forces less than 375#

Maximum Bot Chord Forces Per Ply (lbs)

Chords	Tens.	Comp.
H - F	114	-398

Maximum Web Forces Per Ply (lbs)

Webs	Tens.	Comp.
B - H	157	-385

Lumber

Top chord: 2x4 SP #2;
Bot chord: 2x4 SP #2;
Webs: 2x4 SP #3;

Wind

Wind loads based on MWFRS with additional C&C member design.

Left end vertical not exposed to wind pressure.

Wind loading based on both gable and hip roof types.

Additional Notes

Provide (2) 16d common(0.162"x3.5") toe-nails at top chord.
Provide (2) 16d common(0.162"x3.5") toe-nails at bottom chord.

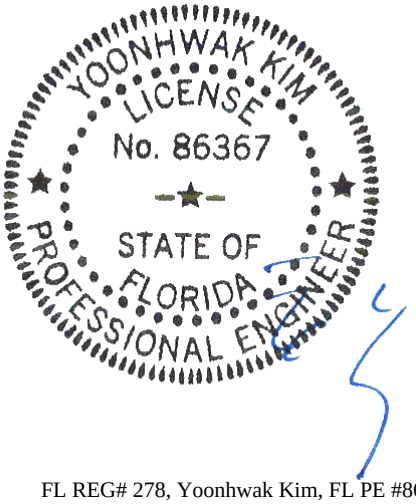

FL REG# 278, Yoonhwak Kim, FL PE #86367
07/01/2021

****WARNING**** READ AND FOLLOW ALL NOTES ON THIS DRAWING!
****IMPORTANT**** FURNISH THIS DRAWING TO ALL CONTRACTORS INCLUDING THE INSTALLERS

Trusses require extreme care in fabricating, handling, shipping, installing and bracing. Refer to and follow the latest edition of BCSI (Building Component Safety Information, by TPI and SBCA) for safety practices prior to performing these functions. Installers shall provide temporary bracing per BCSI. Unless noted otherwise, top chord shall have properly attached structural sheathing and bottom chord shall have a properly attached rigid ceiling. Locations shown for permanent lateral restraint of webs shall have bracing installed per BCSI sections B3, B7, or B10, as applicable. Apply plates to each face of truss and position as shown above and on the Joint Details, unless noted otherwise. Refer to drawings 160A-Z for standard plate positions. Refer to job's General Notes page for additional information.

Alpine, a division of ITW Building Components Group Inc. shall not be responsible for any deviation from this drawing, any failure to build the truss in conformance with ANSI/TPI 1, or for handling, shipping, installation and bracing of trusses. A seal on this drawing or cover page listing this drawing, indicates acceptance of professional engineering responsibility solely for the design shown. The suitability and use of this drawing for any structure is the responsibility of the Building Designer per ANSI/TPI 1 Sec.2.

For more information see these web sites: Alpine: alpineitw.com; TPI: tpinst.org; SBCA: sbcindustry.com; ICC: iccsafe.org; AWC: awc.org

ALPINE AN ITW COMPANY
6750 Forum Drive
Suite 305
Orlando FL, 32821

SEQN: 626530 EJAC FROM: CDM	Ply: 1 Qty: 3	**Job Number:** 21-5719 Jones/Freeman **Truss Label:** J08	Cust: R 215 JRef:1X6P2150009 T33 DrwNo: 182.21.1414.30033 / YK 07/01/2021

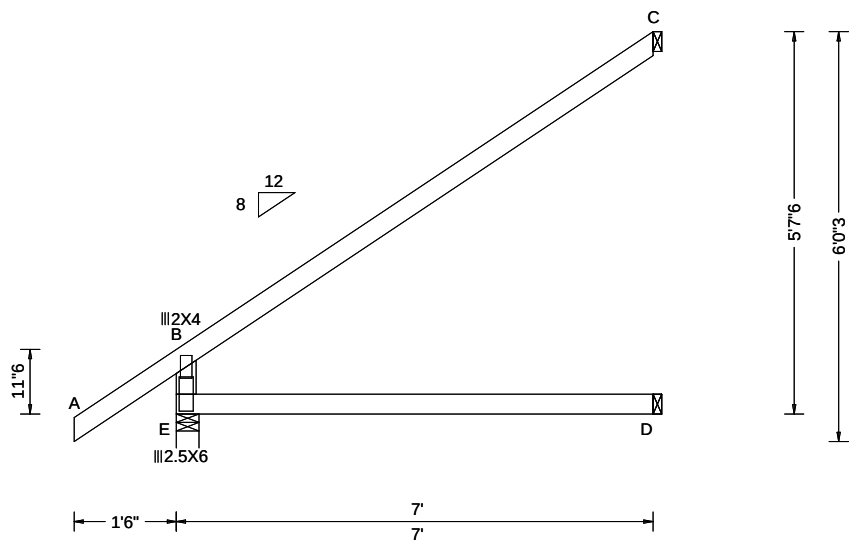

Loading Criteria (psf)	**Wind Criteria**	**Snow Criteria** (Pg,Pf in PSF)	**Defl/CSI Criteria**
TCLL: 20.00 TCDL: 10.00 BCLL: 0.00 BCDL: 10.00 Des Ld: 40.00 NCBCLL: 10.00 Soffit: 2.00 Load Duration: 1.25 Spacing: 24.0 "	Wind Std: ASCE 7-16 Speed: 130 mph Enclosure: Closed Risk Category: II EXP: C Kzt: NA Mean Height: 15.00 ft TCDL: 5.0 psf BCDL: 5.0 psf MWFRS Parallel Dist: h/2 to h C&C Dist a: 3.00 ft Loc. from endwall: not in 4.50 ft GCpi: 0.18 Wind Duration: 1.60	Pg: NA Ct: NA CAT: NA Pf: NA Ce: NA Lu: NA Cs: NA Snow Duration: NA Building Code: FBC 7th Ed. 2020 Res. TPI Std: 2014 Rep Fac: Yes FT/RT:20(0)/10(0) Plate Type(s): WAVE	PP Deflection in loc L/defl L/# VERT(LL): 0.000 B 999 240 VERT(CL): 0.000 B 999 180 HORZ(LL): -0.002 B - - HORZ(TL): 0.002 B - - Creep Factor: 2.0 Max TC CSI: 0.921 Max BC CSI: 0.607 Max Web CSI: 0.142 VIEW Ver: 21.01.01A.0521.20

▲Maximum Reactions (lbs)

	Gravity			Non-Gravity		
Loc	R+	/ R-	/ Rh	/ Rw	/ U	/ RL
E	408	/-	/-	/352	/146	/-
D	140	/-	/-	/70	/-	/-
C	213	/-	/-	/108	/5	/192

Wind reactions based on MWFRS
E Brg Width = 4.0 Min Req = 1.5
D Brg Width = 1.5 Min Req = -
C Brg Width = 1.5 Min Req = -
Bearing E is a rigid surface.
Members not listed have forces less than 375#

Maximum Web Forces Per Ply (lbs)

Webs	Tens.	Comp.
B - E	477	-338

Lumber

Top chord: 2x4 SP #2;
Bot chord: 2x4 SP #2;
Webs: 2x4 SP #3;

Wind

Wind loads based on MWFRS with additional C&C member design.

Left end vertical not exposed to wind pressure.

Wind loading based on both gable and hip roof types.

Additional Notes

Provide (2) 16d common(0.162"x3.5") toe-nails at top chord.
Provide (2) 16d common(0.162"x3.5") toe-nails at bottom chord.

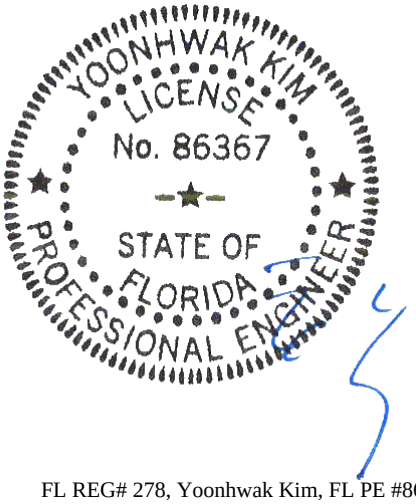

FL REG# 278, Yoonhwak Kim, FL PE #86367
07/01/2021

****WARNING**** READ AND FOLLOW ALL NOTES ON THIS DRAWING!
****IMPORTANT**** FURNISH THIS DRAWING TO ALL CONTRACTORS INCLUDING THE INSTALLERS

Trusses require extreme care in fabricating, handling, shipping, installing and bracing. Refer to and follow the latest edition of BCSI (Building Component Safety Information, by TPI and SBCA) for safety practices prior to performing these functions. Installers shall provide temporary bracing per BCSI. Unless noted otherwise, top chord shall have properly attached structural sheathing and bottom chord shall have a properly attached rigid ceiling. Locations shown for permanent lateral restraint of webs shall have bracing installed per BCSI sections B3, B7, or B10, as applicable. Apply plates to each face of truss and position as shown above and on the Joint Details, unless noted otherwise. Refer to drawings 160A-Z for standard plate positions. Refer to job's General Notes page for additional information.

Alpine, a division of ITW Building Components Group Inc. shall not be responsible for any deviation from this drawing, any failure to build the truss in conformance with ANSI/TPI 1, or for handling, shipping, installation and bracing of trusses. A seal on this drawing or cover page listing this drawing, indicates acceptance of professional engineering responsibility solely for the design shown. The suitability and use of this drawing for any structure is the responsibility of the Building Designer per ANSI/TPI 1 Sec.2.

For more information see these web sites: Alpine: alpineitw.com; TPI: tpinst.org; SBCA: sbcindustry.com; ICC: iccsafe.org; AWC: awc.org

ALPINE AN ITW COMPANY
6750 Forum Drive
Suite 305
Orlando FL, 32821

SEQN: 626511 JACK FROM: CDM	Ply: 1 Qty: 3	**Job Number:** 21-5719 Jones/Freeman **Truss Label:** J09	Cust: R 215 JRef:1X6P2150009 T28 DrwNo: 182.21.1414.31293 / YK 07/01/2021

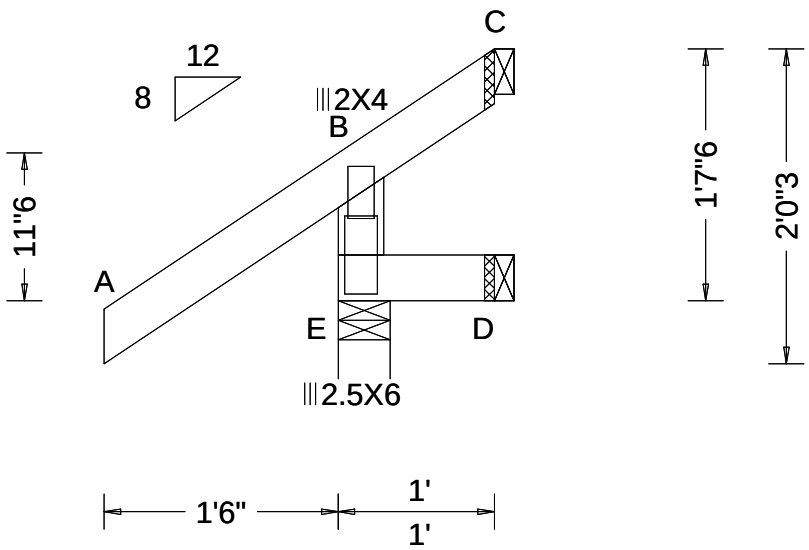

Loading Criteria (psf)	**Wind Criteria**	**Snow Criteria** (Pg,Pf in PSF)	**Defl/CSI Criteria**
TCLL: 20.00 TCDL: 10.00 BCLL: 0.00 BCDL: 10.00 Des Ld: 40.00 NCBCLL: 10.00 Soffit: 2.00 Load Duration: 1.25 Spacing: 24.0 "	Wind Std: ASCE 7-16 Speed: 130 mph Enclosure: Closed Risk Category: II EXP: C Kzt: NA Mean Height: 15.00 ft TCDL: 5.0 psf BCDL: 5.0 psf MWFRS Parallel Dist: 0 to h/2 C&C Dist a: 3.00 ft Loc. from endwall: Any GCpi: 0.18 Wind Duration: 1.60	Pg: NA Ct: NA CAT: NA Pf: NA Ce: NA Lu: NA Cs: NA Snow Duration: NA Building Code: FBC 7th Ed. 2020 Res. TPI Std: 2014 Rep Fac: Yes FT/RT:20(0)/10(0) Plate Type(s): WAVE	PP Deflection in loc L/defl L/# VERT(LL): 0.000 B 999 240 VERT(CL): 0.000 B 999 180 HORZ(LL): 0.000 B - - HORZ(TL): 0.000 B - - Creep Factor: 2.0 Max TC CSI: 0.261 Max BC CSI: 0.010 Max Web CSI: 0.136 VIEW Ver: 21.01.01A.0521.20

▲Maximum Reactions (lbs)

	Gravity			Non-Gravity		
Loc	R+	/ R-	/ Rh	/ Rw	/ U	/ RL
E	223	/-	/-	/218	/83	/-
D	20	/-	/-	/10	/-	/-
C	-	/-45	/-	/60	/87	/50

Wind reactions based on MWFRS
E Brg Width = 4.0 Min Req = 1.5
D Brg Width = 1.5 Min Req = -
C Brg Width = 1.5 Min Req = -
Bearing E is a rigid surface.
Members not listed have forces less than 375#

Maximum Web Forces Per Ply (lbs)

Webs	Tens.	Comp.
B - E	458	- 213

Lumber

Top chord: 2x4 SP #2;
Bot chord: 2x4 SP #2;
Webs: 2x4 SP #3;

Wind

Wind loads based on MWFRS with additional C&C member design.

Left end vertical not exposed to wind pressure.

Wind loading based on both gable and hip roof types.

Additional Notes

Provide (2) 16d common(0.162"x3.5") toe-nails at top chord.
Provide (2) 16d common(0.162"x3.5") toe-nails at bottom chord.

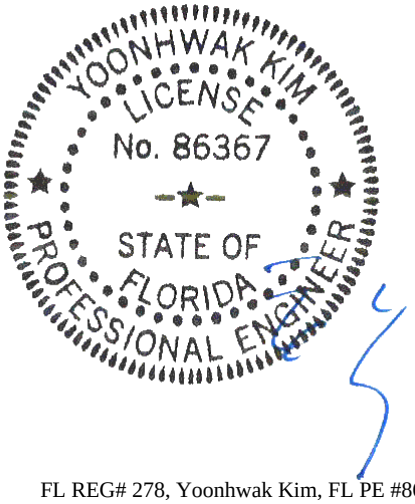

FL REG# 278, Yoonhwak Kim, FL PE #86367
07/01/2021

****WARNING**** READ AND FOLLOW ALL NOTES ON THIS DRAWING!
****IMPORTANT**** FURNISH THIS DRAWING TO ALL CONTRACTORS INCLUDING THE INSTALLERS

Trusses require extreme care in fabricating, handling, shipping, installing and bracing. Refer to and follow the latest edition of BCSI (Building Component Safety Information, by TPI and SBCA) for safety practices prior to performing these functions. Installers shall provide temporary bracing per BCSI. Unless noted otherwise, top chord shall have properly attached structural sheathing and bottom chord shall have a properly attached rigid ceiling. Locations shown for permanent lateral restraint of webs shall have bracing installed per BCSI sections B3, B7, or B10, as applicable. Apply plates to each face of truss and position as shown above and on the Joint Details, unless noted otherwise. Refer to drawings 160A-Z for standard plate positions. Refer to job's General Notes page for additional information.

Alpine, a division of ITW Building Components Group Inc. shall not be responsible for any deviation from this drawing, any failure to build the truss in conformance with ANSI/TPI 1, or for handling, shipping, installation and bracing of trusses. A seal on this drawing or cover page listing this drawing, indicates acceptance of professional engineering responsibility solely for the design shown. The suitability and use of this drawing for any structure is the responsibility of the Building Designer per ANSI/TPI 1 Sec.2.

For more information see these web sites: Alpine: alpineitw.com; TPI: tpinst.org; SBCA: sbcindustry.com; ICC: iccsafe.org; AWC: awc.org

ALPINE AN ITW COMPANY
6750 Forum Drive
Suite 305
Orlando FL, 32821

SEQN: 626513 JACK FROM: CDM	Ply: 1 Qty: 2	**Job Number:** 21-5719 Jones/Freeman **Truss Label:** J10	Cust: R 215 JRef:1X6P2150009 T31 DrwNo: 182.21.1414.32827 / YK 07/01/2021

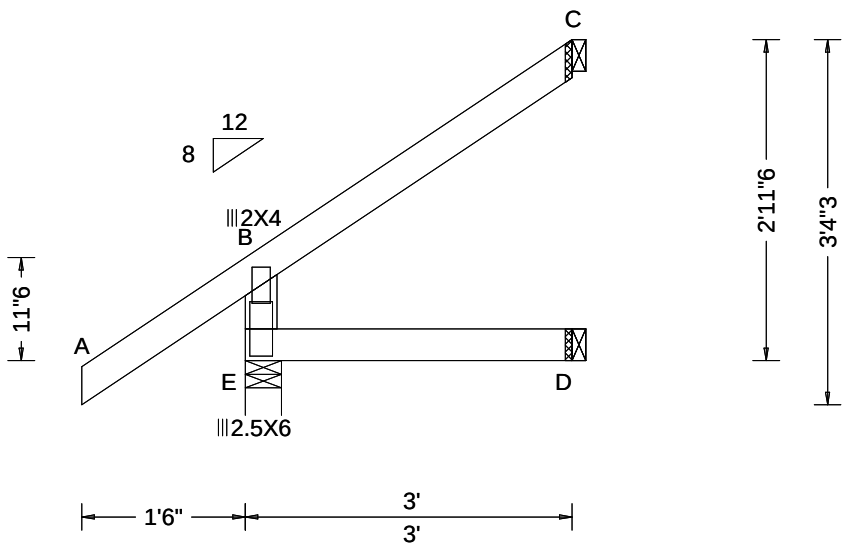

Loading Criteria (psf)	**Wind Criteria**	**Snow Criteria** (Pg,Pf in PSF)	**Defl/CSI Criteria**
TCLL: 20.00 TCDL: 10.00 BCLL: 0.00 BCDL: 10.00 Des Ld: 40.00 NCBCLL: 10.00 Soffit: 2.00 Load Duration: 1.25 Spacing: 24.0 "	Wind Std: ASCE 7-16 Speed: 130 mph Enclosure: Closed Risk Category: II EXP: C Kzt: NA Mean Height: 15.00 ft TCDL: 5.0 psf BCDL: 5.0 psf MWFRS Parallel Dist: 0 to h/2 C&C Dist a: 3.00 ft Loc. from endwall: not in 4.50 ft GCpi: 0.18 Wind Duration: 1.60	Pg: NA Ct: NA CAT: NA Pf: NA Ce: NA Lu: NA Cs: NA Snow Duration: NA Building Code: FBC 7th Ed. 2020 Res. TPI Std: 2014 Rep Fac: Yes FT/RT:20(0)/10(0) Plate Type(s): WAVE	PP Deflection in loc L/defl L/# VERT(LL): 0.000 B 999 240 VERT(CL): 0.000 B 999 180 HORZ(LL): -0.000 B - - HORZ(TL): 0.001 B - - Creep Factor: 2.0 Max TC CSI: 0.226 Max BC CSI: 0.098 Max Web CSI: 0.110 VIEW Ver: 21.01.01A.0521.20

▲Maximum Reactions (lbs)

	Gravity			Non-Gravity		
Loc	R+	/ R-	/ Rh	/ Rw	/ U	/ RL
E	255	/-	/-	/233	/93	/-
D	60	/-	/-	/30	/-	/-
C	70	/-	/-	/64	/24	/98

Wind reactions based on MWFRS
E Brg Width = 4.0 Min Req = 1.5
D Brg Width = 1.5 Min Req = -
C Brg Width = 1.5 Min Req = -
Bearing E is a rigid surface.
Members not listed have forces less than 375#

Lumber

Top chord: 2x4 SP #2;
Bot chord: 2x4 SP #2;
Webs: 2x4 SP #3;

Wind

Wind loads based on MWFRS with additional C&C member design.

Left end vertical not exposed to wind pressure.

Wind loading based on both gable and hip roof types.

Additional Notes

Provide (2) 16d common(0.162"x3.5") toe-nails at top chord.
Provide (2) 16d common(0.162"x3.5") toe-nails at bottom chord.

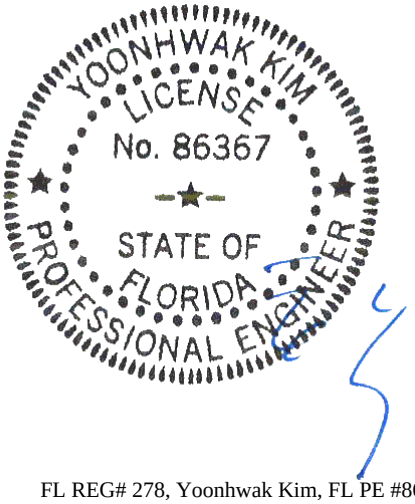

FL REG# 278, Yoonhwak Kim, FL PE #86367
07/01/2021

****WARNING**** READ AND FOLLOW ALL NOTES ON THIS DRAWING!
****IMPORTANT**** FURNISH THIS DRAWING TO ALL CONTRACTORS INCLUDING THE INSTALLERS

Trusses require extreme care in fabricating, handling, shipping, installing and bracing. Refer to and follow the latest edition of BCSI (Building Component Safety Information, by TPI and SBCA) for safety practices prior to performing these functions. Installers shall provide temporary bracing per BCSI. Unless noted otherwise, top chord shall have properly attached structural sheathing and bottom chord shall have a properly attached rigid ceiling. Locations shown for permanent lateral restraint of webs shall have bracing installed per BCSI sections B3, B7, or B10, as applicable. Apply plates to each face of truss and position as shown above and on the Joint Details, unless noted otherwise. Refer to drawings 160A-Z for standard plate positions. Refer to job's General Notes page for additional information.

Alpine, a division of ITW Building Components Group Inc. shall not be responsible for any deviation from this drawing, any failure to build the truss in conformance with ANSI/TPI 1, or for handling, shipping, installation and bracing of trusses. A seal on this drawing or cover page listing this drawing, indicates acceptance of professional engineering responsibility solely for the design shown. The suitability and use of this drawing for any structure is the responsibility of the Building Designer per ANSI/TPI 1 Sec.2.

For more information see these web sites: Alpine: alpineitw.com; TPI: tpinst.org; SBCA: sbcindustry.com; ICC: iccsafe.org; AWC: awc.org

ALPINE AN ITW COMPANY
6750 Forum Drive
Suite 305
Orlando FL, 32821

SEQN: 626515 JACK FROM: CDM	Ply: 1 Qty: 2	**Job Number:** 21-5719 Jones/Freeman **Truss Label:** J11	Cust: R 215 JRef:1X6P2150009 T30 DrwNo: 182.21.1414.34090 / YK 07/01/2021

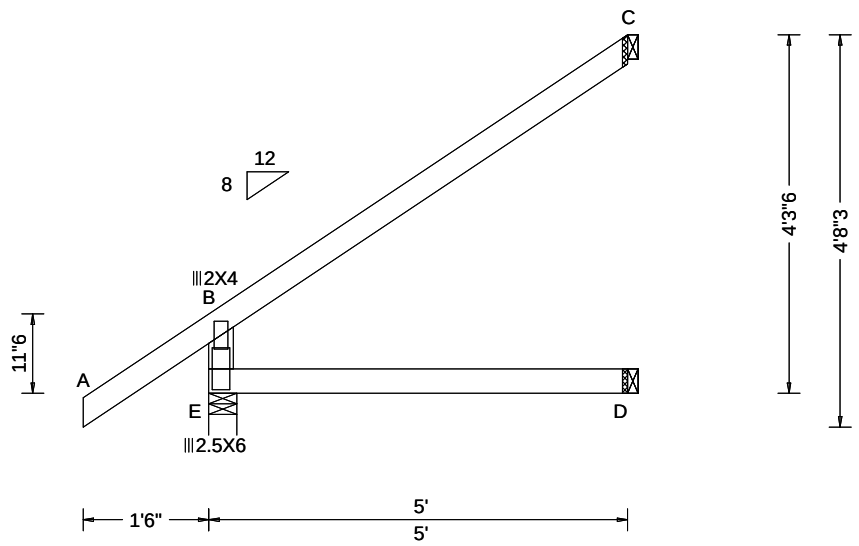

Loading Criteria (psf)	**Wind Criteria**	**Snow Criteria** (Pg,Pf in PSF)	**Defl/CSI Criteria**
TCLL: 20.00 TCDL: 10.00 BCLL: 0.00 BCDL: 10.00 Des Ld: 40.00 NCBCLL: 10.00 Soffit: 2.00 Load Duration: 1.25 Spacing: 24.0 "	Wind Std: ASCE 7-16 Speed: 130 mph Enclosure: Closed Risk Category: II EXP: C Kzt: NA Mean Height: 15.00 ft TCDL: 5.0 psf BCDL: 5.0 psf MWFRS Parallel Dist: 0 to h/2 C&C Dist a: 3.00 ft Loc. from endwall: not in 4.50 ft GCpi: 0.18 Wind Duration: 1.60	Pg: NA Ct: NA CAT: NA Pf: NA Ce: NA Lu: NA Cs: NA Snow Duration: NA Building Code: FBC 7th Ed. 2020 Res. TPI Std: 2014 Rep Fac: Yes FT/RT:20(0)/10(0) Plate Type(s): WAVE	PP Deflection in loc L/defl L/# VERT(LL): 0.000 B 999 240 VERT(CL): 0.000 B 999 180 HORZ(LL): -0.001 B - - HORZ(TL): 0.001 B - - Creep Factor: 2.0 Max TC CSI: 0.483 Max BC CSI: 0.297 Max Web CSI: 0.133 VIEW Ver: 21.01.01A.0521.20

▲Maximum Reactions (lbs)

	Gravity			Non-Gravity		
Loc	R+	/ R-	/ Rh	/ Rw	/ U	/ RL
E	329	/-	/-	/290	/118	/-
D	100	/-	/-	/50	/-	/-
C	145	/-	/-	/85	/3	/145

Wind reactions based on MWFRS
E Brg Width = 4.0 Min Req = 1.5
D Brg Width = 1.5 Min Req = -
C Brg Width = 1.5 Min Req = -
Bearing E is a rigid surface.
Members not listed have forces less than 375#

Maximum Web Forces Per Ply (lbs)

Webs	Tens.	Comp.
B - E	448	-279

Lumber

Top chord: 2x4 SP #2;
Bot chord: 2x4 SP #2;
Webs: 2x4 SP #3;

Wind

Wind loads based on MWFRS with additional C&C member design.

Left end vertical not exposed to wind pressure.

Wind loading based on both gable and hip roof types.

Additional Notes

Provide (2) 16d common(0.162"x3.5") toe-nails at top chord.
Provide (2) 16d common(0.162"x3.5") toe-nails at bottom chord.

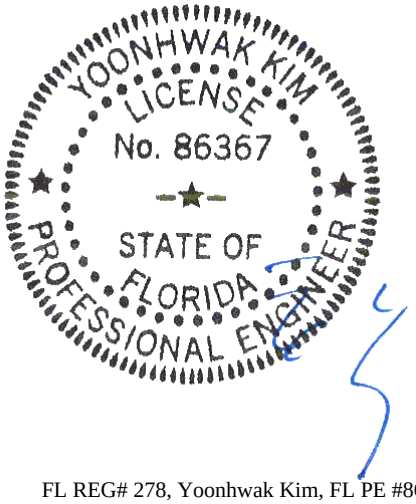

FL REG# 278, Yoonhwak Kim, FL PE #86367
07/01/2021

****WARNING**** READ AND FOLLOW ALL NOTES ON THIS DRAWING!
****IMPORTANT**** FURNISH THIS DRAWING TO ALL CONTRACTORS INCLUDING THE INSTALLERS

Trusses require extreme care in fabricating, handling, shipping, installing and bracing. Refer to and follow the latest edition of BCSI (Building Component Safety Information, by TPI and SBCA) for safety practices prior to performing these functions. Installers shall provide temporary bracing per BCSI. Unless noted otherwise, top chord shall have properly attached structural sheathing and bottom chord shall have a properly attached rigid ceiling. Locations shown for permanent lateral restraint of webs shall have bracing installed per BCSI sections B3, B7, or B10, as applicable. Apply plates to each face of truss and position as shown above and on the Joint Details, unless noted otherwise. Refer to drawings 160A-Z for standard plate positions. Refer to job's General Notes page for additional information.

Alpine, a division of ITW Building Components Group Inc. shall not be responsible for any deviation from this drawing, any failure to build the truss in conformance with ANSI/TPI 1, or for handling, shipping, installation and bracing of trusses. A seal on this drawing or cover page listing this drawing, indicates acceptance of professional engineering responsibility solely for the design shown. The suitability and use of this drawing for any structure is the responsibility of the Building Designer per ANSI/TPI 1 Sec.2.

For more information see these web sites: Alpine: alpineitw.com; TPI: tpinst.org; SBCA: sbcindustry.com; ICC: iccsafe.org; AWC: awc.org

ALPINE AN ITW COMPANY
6750 Forum Drive
Suite 305
Orlando FL, 32821

SEQN: 626644 GABL FROM: CDM	Ply: 1 Qty: 1	**Job Number:** 21-5719 Jones/Freeman **Truss Label:** PB01	Cust: R 215 JRef:1X6P2150009 T52 DrwNo: 182.21.1414.38927 / YK 07/01/2021

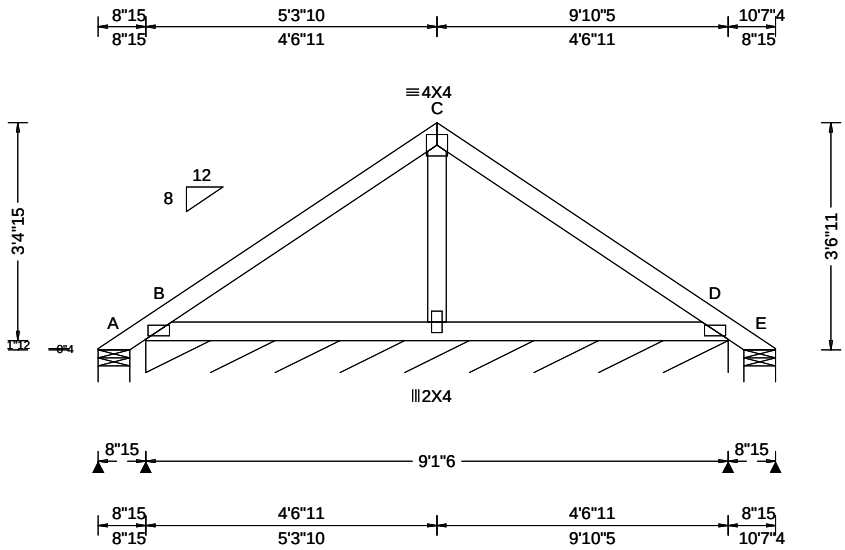

Loading Criteria (psf)	**Wind Criteria**	**Snow Criteria** (Pg,Pf in PSF)	**Defl/CSI Criteria**
TCLL: 20.00 TCDL: 10.00 BCLL: 0.00 BCDL: 10.00 Des Ld: 40.00 NCBCLL: 10.00 Soffit: 2.00 Load Duration: 1.25 Spacing: 24.0 "	Wind Std: ASCE 7-16 Speed: 130 mph Enclosure: Closed Risk Category: II EXP: C Kzt: NA Mean Height: 17.14 ft TCDL: 5.0 psf BCDL: 5.0 psf MWFRS Parallel Dist: 0 to h/2 C&C Dist a: 3.00 ft Loc. from endwall: Any GCpi: 0.18 Wind Duration: 1.60	Pg: NA Ct: NA CAT: NA Pf: NA Ce: NA Lu: NA Cs: NA Snow Duration: NA Building Code: FBC 7th Ed. 2020 Res. TPI Std: 2014 Rep Fac: Yes FT/RT:20(0)/10(0) Plate Type(s): WAVE	PP Deflection in loc L/defl L/# VERT(LL): 0.001 F 999 240 VERT(CL): 0.003 F 999 180 HORZ(LL): 0.001 F - - HORZ(TL): 0.002 F - - Creep Factor: 2.0 Max TC CSI: 0.229 Max BC CSI: 0.095 Max Web CSI: 0.028 VIEW Ver: 21.01.01A.0521.20

▲Maximum Reactions (lbs), or *=PLF

	Gravity			Non-Gravity		
Loc	R+	/ R-	/ Rh	/ Rw	/ U	/ RL
A	-	/-120	/-	/113	/166	/100
B*	102	/-	/-	/71	/40	/-
E	-	/-120	/-	/79	/110	/-

Wind reactions based on MWFRS
A Brg Width = 5.9 Min Req = 1.5
B Brg Width = 109 Min Req = -
E Brg Width = 5.9 Min Req = 1.5
Bearings A, B, & E are a rigid surface.
Members not listed have forces less than 375#

Lumber

Top chord: 2x4 SP #2;
Bot chord: 2x4 SP #2;
Webs: 2x4 SP #3;

Plating Notes

All plates are 2X4(A1) except as noted.

Loading

Gable end supports 8" max rake overhang. Top chord must not be cut or notched.

Wind

Wind loads based on MWFRS with additional C&C member design.

Wind loading based on both gable and hip roof types.

Additional Notes

See DWGS A14030ENC160118 & GBLLETIN0118 for gable wind bracing and other requirements.

Refer to DWG PB160160118 for piggyback details.

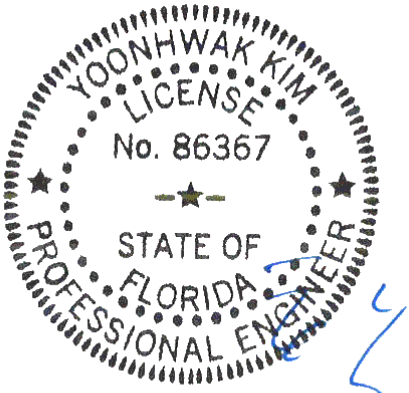

FL REG# 278, Yoonhwak Kim, FL PE #86367
07/01/2021

****WARNING**** READ AND FOLLOW ALL NOTES ON THIS DRAWING!
****IMPORTANT**** FURNISH THIS DRAWING TO ALL CONTRACTORS INCLUDING THE INSTALLERS

Trusses require extreme care in fabricating, handling, shipping, installing and bracing. Refer to and follow the latest edition of BCSI (Building Component Safety Information, by TPI and SBCA) for safety practices prior to performing these functions. Installers shall provide temporary bracing per BCSI. Unless noted otherwise, top chord shall have properly attached structural sheathing and bottom chord shall have a properly attached rigid ceiling. Locations shown for permanent lateral restraint of webs shall have bracing installed per BCSI sections B3, B7, or B10, as applicable. Apply plates to each face of truss and position as shown above and on the Joint Details, unless noted otherwise. Refer to drawings 160A-Z for standard plate positions. Refer to job's General Notes page for additional information.

Alpine, a division of ITW Building Components Group Inc. shall not be responsible for any deviation from this drawing, any failure to build the truss in conformance with ANSI/TPI 1, or for handling, shipping, installation and bracing of trusses. A seal on this drawing or cover page listing this drawing, indicates acceptance of professional engineering responsibility solely for the design shown. The suitability and use of this drawing for any structure is the responsibility of the Building Designer per ANSI/TPI 1 Sec.2.

For more information see these web sites: Alpine: alpineitw.com; TPI: tpinst.org; SBCA: sbcindustry.com; ICC: iccsafe.org; AWC: awc.org

ALPINE AN ITW COMPANY
6750 Forum Drive
Suite 305
Orlando FL, 32821

SEQN: 626636 GABL FROM: CDM	Ply: 1 Qty: 8	**Job Number:** 21-5719 Jones/Freeman **Truss Label:** PB02	Cust: R 215 JRef:1X6P2150009 T50 DrwNo: 182.21.1414.40163 / YK 07/01/2021

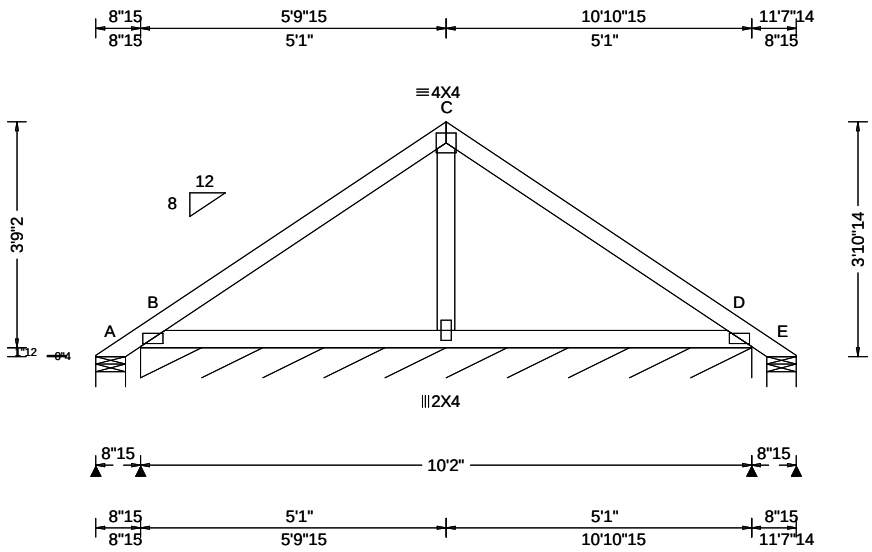

Loading Criteria (psf)

TCLL:	20.00
TCDL:	10.00
BCLL:	0.00
BCDL:	10.00
Des Ld:	40.00
NCBCLL:	10.00
Soffit:	2.00

Load Duration: 1.25
Spacing: 24.0 "

Wind Criteria
Wind Std: ASCE 7-16
Speed: 130 mph
Enclosure: Closed
Risk Category: II
EXP: C Kzt: NA
Mean Height: 17.32 ft
TCDL: 5.0 psf
BCDL: 5.0 psf
MWFRS Parallel Dist: 0 to h/2
C&C Dist a: 3.00 ft
Loc. from endwall: Any
GCpi: 0.18
Wind Duration: 1.60

Snow Criteria (Pg,Pf in PSF)
Pg: NA Ct: NA CAT: NA
Pf: NA Ce: NA
Lu: NA Cs: NA
Snow Duration: NA

Building Code:
FBC 7th Ed. 2020 Res.
TPI Std: 2014
Rep Fac: Yes
FT/RT:20(0)/10(0)
Plate Type(s):
WAVE

Defl/CSI Criteria

PP Deflection in	loc	L/defl	L/#
VERT(LL): 0.002	F	999	240
VERT(CL): 0.003	F	999	180
HORZ(LL): 0.002	F	-	-
HORZ(TL): 0.003	F	-	-

Creep Factor: 2.0
Max TC CSI: 0.292
Max BC CSI: 0.118
Max Web CSI: 0.034

VIEW Ver: 21.01.01A.0521.20

▲Maximum Reactions (lbs), or *=PLF

Loc	Gravity R+	Gravity / R-	Gravity / Rh	Non-Gravity / Rw	Non-Gravity / U	Non-Gravity / RL
A	-	/-163	/-	/137	/211	/111
B*	107	/-	/-	/74	/43	/-
E	-	/-163	/-	/106	/150	/-
D		/-120				

Wind reactions based on MWFRS
A Brg Width = 5.9 Min Req = 1.5
B Brg Width = 121 Min Req = -
E Brg Width = 5.9 Min Req = 1.5
Bearings A, B, & E are a rigid surface.
Members not listed have forces less than 375#

Lumber
Top chord: 2x4 SP #2;
Bot chord: 2x4 SP #2;
Webs: 2x4 SP #3;

Plating Notes
All plates are 2X4(A1) except as noted.

Loading
Gable end supports 8" max rake overhang. Top chord must not be cut or notched.

Wind
Wind loads based on MWFRS with additional C&C member design.
Wind loading based on both gable and hip roof types.

Additional Notes
See DWGS A14030ENC160118 & GBLLETIN0118 for gable wind bracing and other requirements.
Refer to DWG PB160160118 for piggyback details.

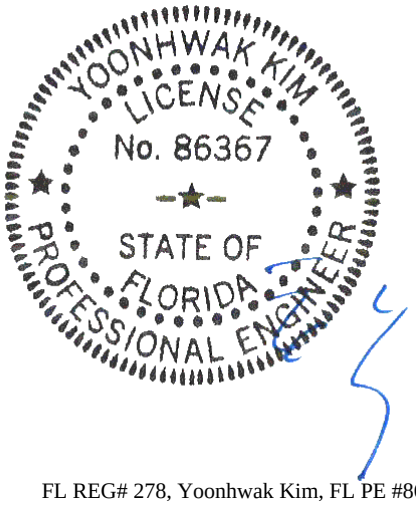

FL REG# 278, Yoonhwak Kim, FL PE #86367
07/01/2021

****WARNING**** READ AND FOLLOW ALL NOTES ON THIS DRAWING!
****IMPORTANT**** FURNISH THIS DRAWING TO ALL CONTRACTORS INCLUDING THE INSTALLERS

Trusses require extreme care in fabricating, handling, shipping, installing and bracing. Refer to and follow the latest edition of BCSI (Building Component Safety Information, by TPI and SBCA) for safety practices prior to performing these functions. Installers shall provide temporary bracing per BCSI. Unless noted otherwise, top chord shall have properly attached structural sheathing and bottom chord shall have a properly attached rigid ceiling. Locations shown for permanent lateral restraint of webs shall have bracing installed per BCSI sections B3, B7, or B10, as applicable. Apply plates to each face of truss and position as shown above and on the Joint Details, unless noted otherwise. Refer to drawings 160A-Z for standard plate positions. Refer to job's General Notes page for additional information.

Alpine, a division of ITW Building Components Group Inc. shall not be responsible for any deviation from this drawing, any failure to build the truss in conformance with ANSI/TPI 1, or for handling, shipping, installation and bracing of trusses. A seal on this drawing or cover page listing this drawing, indicates acceptance of professional engineering responsibility solely for the design shown. The suitability and use of this drawing for any structure is the responsibility of the Building Designer per ANSI/TPI 1 Sec.2.

For more information see these web sites: Alpine: alpineitw.com; TPI: tpinst.org; SBCA: sbcindustry.com; ICC: iccsafe.org; AWC: awc.org

ALPINE
AN ITW COMPANY
6750 Forum Drive
Suite 305
Orlando FL, 32821

SEQN: 626766 COMN FROM: CDM	Ply: 1 Qty: 2	**Job Number:** 21-5719 Jones/Freeman **Truss Label:** PB03	Cust: R 215 JRef:1X6P2150009 T7 DrwNo: 182.21.1414.41830 / YK 07/01/2021

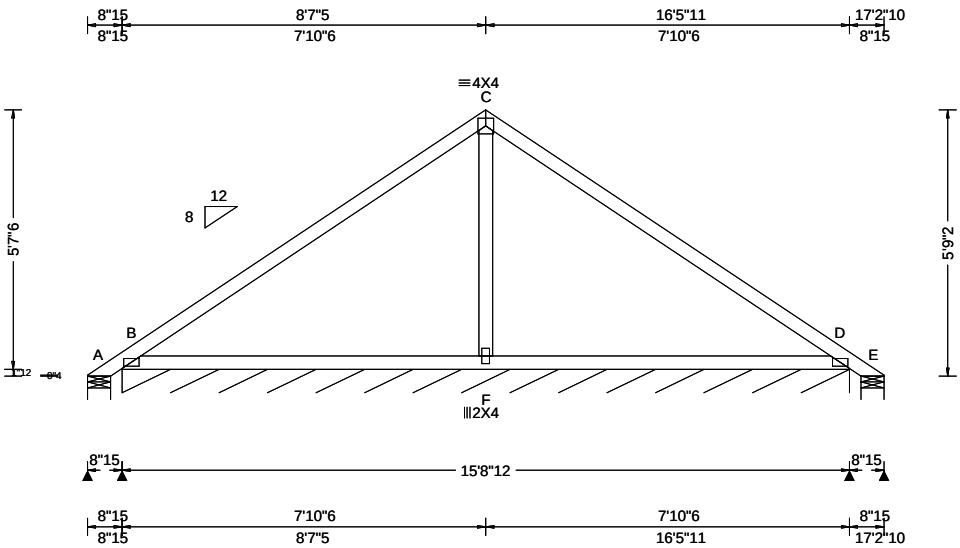

Loading Criteria (psf)

TCLL: 20.00
TCDL: 10.00
BCLL: 0.00
BCDL: 10.00
Des Ld: 40.00
NCBCLL: 10.00
Soffit: 2.00
Load Duration: 1.25
Spacing: 24.0 "

Wind Criteria

Wind Std: ASCE 7-16
Speed: 130 mph
Enclosure: Closed
Risk Category: II
EXP: C Kzt: NA
Mean Height: 23.58 ft
TCDL: 5.0 psf
BCDL: 2.0 psf
MWFRS Parallel Dist: h/2 to h
C&C Dist a: 3.25 ft
Loc. from endwall: not in 13.00 ft
GCpi: 0.18
Wind Duration: 1.60

Snow Criteria (Pg,Pf in PSF)

Pg: NA Ct: NA CAT: NA
Pf: NA Ce: NA
Lu: NA Cs: NA
Snow Duration: NA

Building Code:
FBC 7th Ed. 2020 Res.
TPI Std: 2014
Rep Fac: Yes
FT/RT:20(0)/10(0)
Plate Type(s):
WAVE

Defl/CSI Criteria

PP Deflection in	loc	L/defl	L/#
VERT(LL): 0.006	F	999	240
VERT(CL): 0.010	F	999	180
HORZ(LL): 0.006	F	-	-
HORZ(TL): 0.010	F	-	-

Creep Factor: 2.0
Max TC CSI: 0.800
Max BC CSI: 0.281
Max Web CSI: 0.090

VIEW Ver: 21.01.01A.0521.20

▲Maximum Reactions (lbs), or *=PLF

Loc	Gravity R+	Gravity / R-	Gravity / Rh	Non-Gravity / Rw	Non-Gravity / U	Non-Gravity / RL
A	-	/-499	/-	/312	/565	/172
B*	136	/-	/-	/91	/62	/-
E	-	/-499	/-	/312	/471	/-
B		/-342				
D		/-299				

Wind reactions based on MWFRS
A Brg Width = 5.9 Min Req = 1.5
B Brg Width = 188 Min Req = -
E Brg Width = 5.9 Min Req = 1.5
Bearings A, B, & E are a rigid surface.
Members not listed have forces less than 375#

Maximum Top Chord Forces Per Ply (lbs)

Chords	Tens.	Comp.
A - B	469	- 316

Lumber

Top chord: 2x4 SP #2;
Bot chord: 2x4 SP #2;
Webs: 2x4 SP #3;

Plating Notes

All plates are 2X4(A1) except as noted.

Wind

Wind loads based on MWFRS with additional C&C member design.

Wind loading based on both gable and hip roof types.

Additional Notes

Negative reaction(s) of -499# MAX. from a non-wind load case requires uplift connection. See Maximum Reactions.

Refer to DWG PB160160118 for piggyback details.

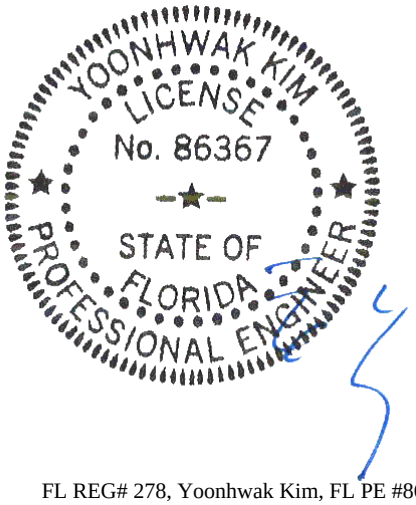

FL REG# 278, Yoonhwak Kim, FL PE #86367
07/01/2021

****WARNING**** READ AND FOLLOW ALL NOTES ON THIS DRAWING!
****IMPORTANT**** FURNISH THIS DRAWING TO ALL CONTRACTORS INCLUDING THE INSTALLERS

Trusses require extreme care in fabricating, handling, shipping, installing and bracing. Refer to and follow the latest edition of BCSI (Building Component Safety Information, by TPI and SBCA) for safety practices prior to performing these functions. Installers shall provide temporary bracing per BCSI. Unless noted otherwise, top chord shall have properly attached structural sheathing and bottom chord shall have a properly attached rigid ceiling. Locations shown for permanent lateral restraint of webs shall have bracing installed per BCSI sections B3, B7, or B10, as applicable. Apply plates to each face of truss and position as shown above and on the Joint Details, unless noted otherwise. Refer to drawings 160A-Z for standard plate positions. Refer to job's General Notes page for additional information.

Alpine, a division of ITW Building Components Group Inc. shall not be responsible for any deviation from this drawing, any failure to build the truss in conformance with ANSI/TPI 1, or for handling, shipping, installation and bracing of trusses. A seal on this drawing or cover page listing this drawing, indicates acceptance of professional engineering responsibility solely for the design shown. The suitability and use of this drawing for any structure is the responsibility of the Building Designer per ANSI/TPI 1 Sec.2.

For more information see these web sites: Alpine: alpineitw.com; TPI: tpinst.org; SBCA: sbcindustry.com; ICC: iccsafe.org; AWC: awc.org

ALPINE AN ITW COMPANY
6750 Forum Drive
Suite 305
Orlando FL, 32821

SEQN: 626634 GABL FROM: CDM	Ply: 1 Qty: 10	**Job Number:** 21-5719 Jones/Freeman **Truss Label:** PB04	Cust: R 215 JRef:1X6P2150009 T48 DrwNo: 182.21.1414.43280 / YK 07/01/2021

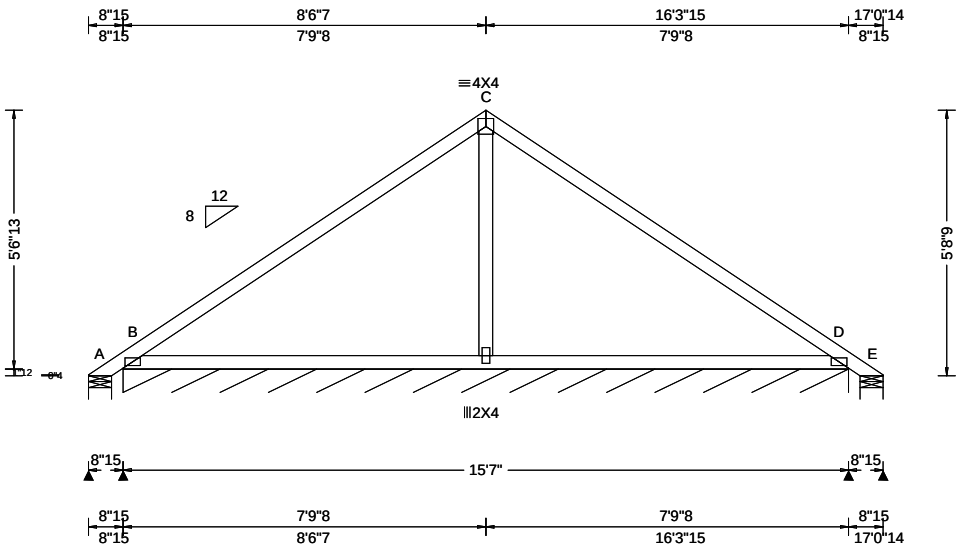

Loading Criteria (psf)

TCLL: 20.00
TCDL: 10.00
BCLL: 0.00
BCDL: 10.00
Des Ld: 40.00
NCBCLL: 10.00
Soffit: 2.00
Load Duration: 1.25
Spacing: 24.0 "

Wind Criteria

Wind Std: ASCE 7-16
Speed: 130 mph
Enclosure: Closed
Risk Category: II
EXP: C Kzt: NA
Mean Height: 23.61 ft
TCDL: 5.0 psf
BCDL: 2.0 psf
MWFRS Parallel Dist: h/2 to h
C&C Dist a: 4.09 ft
Loc. from endwall: not in 9.00 ft
GCpi: 0.18
Wind Duration: 1.60

Snow Criteria (Pg,Pf in PSF)

Pg: NA Ct: NA CAT: NA
Pf: NA Ce: NA
Lu: NA Cs: NA
Snow Duration: NA

Building Code:
FBC 7th Ed. 2020 Res.
TPI Std: 2014
Rep Fac: Yes
FT/RT:20(0)/10(0)
Plate Type(s):
WAVE

Defl/CSI Criteria

PP Deflection in	loc	L/defl	L/#
VERT(LL): 0.006	F	999	240
VERT(CL): 0.010	F	999	180
HORZ(LL): -0.005	F	-	-
HORZ(TL): 0.009	F	-	-

Creep Factor: 2.0
Max TC CSI: 0.782
Max BC CSI: 0.255
Max Web CSI: 0.088

VIEW Ver: 21.01.01A.0521.20

▲Maximum Reactions (lbs), or *=PLF

	Gravity			Non-Gravity		
Loc	R+	/ R-	/ Rh	/ Rw	/ U	/ RL
A	-	/-501	/-	/315	/526	/161
B*	135	/-	/-	/86	/57	/-
E	-	/-501	/-	/282	/438	/-
B		/-364				
D		/-326				

Wind reactions based on MWFRS
A Brg Width = 5.9 Min Req = 1.5
B Brg Width = 186 Min Req = -
E Brg Width = 5.9 Min Req = 1.5
Bearings A, B, & E are a rigid surface.
Members not listed have forces less than 375#

Maximum Top Chord Forces Per Ply (lbs)

Chords	Tens.	Comp.
A - B	433	- 309

Lumber

Top chord: 2x4 SP #2;
Bot chord: 2x4 SP #2;
Webs: 2x4 SP #3;

Plating Notes

All plates are 2X4(A1) except as noted.

Loading

Gable end supports 8" max rake overhang. Top chord must not be cut or notched.

Wind

Wind loads based on MWFRS with additional C&C member design.

Wind loading based on both gable and hip roof types.

Additional Notes

Negative reaction(s) of -501# MAX. from a non-wind load case requires uplift connection. See Maximum Reactions.

See DWGS A14030ENC160118 & GBLLETIN0118 for gable wind bracing and other requirements.

Refer to DWG PB160160118 for piggyback details.

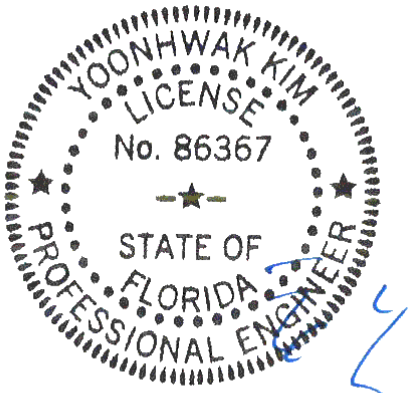

FL REG# 278, Yoonhwak Kim, FL PE #86367
07/01/2021

****WARNING**** READ AND FOLLOW ALL NOTES ON THIS DRAWING!
****IMPORTANT**** FURNISH THIS DRAWING TO ALL CONTRACTORS INCLUDING THE INSTALLERS

Trusses require extreme care in fabricating, handling, shipping, installing and bracing. Refer to and follow the latest edition of BCSI (Building Component Safety Information, by TPI and SBCA) for safety practices prior to performing these functions. Installers shall provide temporary bracing per BCSI. Unless noted otherwise, top chord shall have properly attached structural sheathing and bottom chord shall have a properly attached rigid ceiling. Locations shown for permanent lateral restraint of webs shall have bracing installed per BCSI sections B3, B7, or B10, as applicable. Apply plates to each face of truss and position as shown above and on the Joint Details, unless noted otherwise. Refer to drawings 160A-Z for standard plate positions. Refer to job's General Notes page for additional information.

Alpine, a division of ITW Building Components Group Inc. shall not be responsible for any deviation from this drawing, any failure to build the truss in conformance with ANSI/TPI 1, or for handling, shipping, installation and bracing of trusses. A seal on this drawing or cover page listing this drawing, indicates acceptance of professional engineering responsibility solely for the design shown. The suitability and use of this drawing for any structure is the responsibility of the Building Designer per ANSI/TPI 1 Sec.2.

For more information see these web sites: Alpine: alpineitw.com; TPI: tpinst.org; SBCA: sbcindustry.com; ICC: iccsafe.org; AWC: awc.org

ALPINE
AN ITW COMPANY
6750 Forum Drive
Suite 305
Orlando FL, 32821

SEQN: 626674 COMN FROM: CDM	Ply: 1 Qty: 2	**Job Number:** 21-5719 Jones/Freeman **Truss Label:** PB05	Cust: R 215 JRef:1X6P2150009 T22 DrwNo: 182.21.1414.44747 / YK 07/01/2021

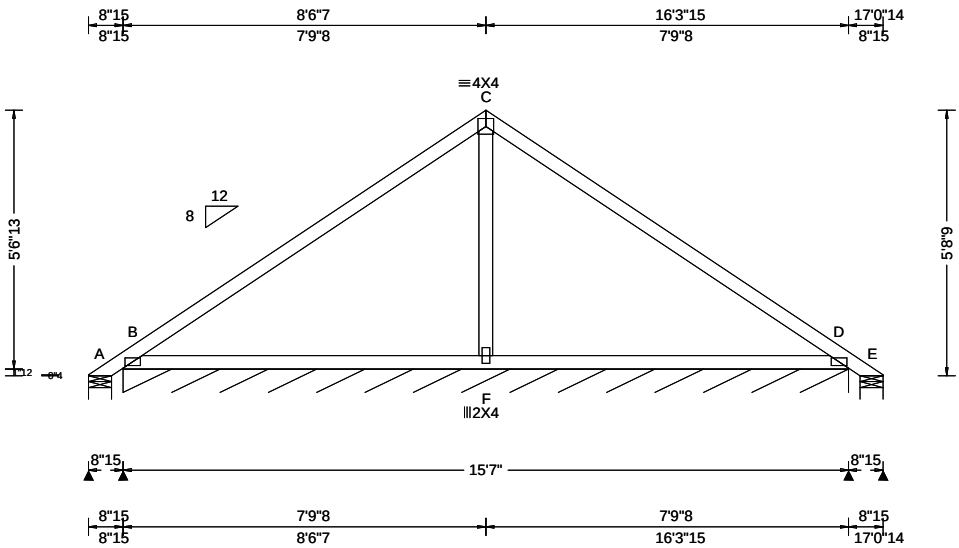

Loading Criteria (psf)

TCLL:	20.00
TCDL:	10.00
BCLL:	0.00
BCDL:	10.00
Des Ld:	40.00
NCBCLL:	10.00
Soffit:	2.00

Load Duration: 1.25
Spacing: 24.0 "

Wind Criteria
Wind Std: ASCE 7-16
Speed: 130 mph
Enclosure: Closed
Risk Category: II
EXP: C Kzt: NA
Mean Height: 23.61 ft
TCDL: 5.0 psf
BCDL: 2.0 psf
MWFRS Parallel Dist: h/2 to h
C&C Dist a: 4.24 ft
Loc. from endwall: not in 9.00 ft
GCpi: 0.18
Wind Duration: 1.60

Snow Criteria (Pg,Pf in PSF)
Pg: NA Ct: NA CAT: NA
Pf: NA Ce: NA
Lu: NA Cs: NA
Snow Duration: NA

Building Code:
FBC 7th Ed. 2020 Res.
TPI Std: 2014
Rep Fac: Yes
FT/RT:20(0)/10(0)
Plate Type(s):
WAVE

Defl/CSI Criteria

PP Deflection in	loc	L/defl	L/#
VERT(LL): 0.006	F	999	240
VERT(CL): 0.010	F	999	180
HORZ(LL): -0.005	F	-	-
HORZ(TL): 0.009	F	-	-

Creep Factor: 2.0
Max TC CSI: 0.782
Max BC CSI: 0.255
Max Web CSI: 0.088

VIEW Ver: 21.01.01A.0521.20

▲Maximum Reactions (lbs), or *=PLF

	Gravity			Non-Gravity		
Loc	R+	/ R-	/ Rh	/ Rw	/ U	/ RL
A	-	/-501	/-	/315	/526	/161
B*	135	/-	/-	/86	/57	/-
E	-	/-501	/-	/282	/438	/-
B		/-364				
D		/-326				

Wind reactions based on MWFRS
A Brg Width = 5.9 Min Req = 1.5
B Brg Width = 186 Min Req = -
E Brg Width = 5.9 Min Req = 1.5
Bearings A, B, & E are a rigid surface.
Members not listed have forces less than 375#

Maximum Top Chord Forces Per Ply (lbs)

Chords	Tens.	Comp.
A - B	433	- 309

Lumber
Top chord: 2x4 SP #2;
Bot chord: 2x4 SP #2;
Webs: 2x4 SP #3;

Plating Notes
All plates are 2X4(A1) except as noted.

Wind
Wind loads based on MWFRS.
Wind loading based on both gable and hip roof types.

Additional Notes
Negative reaction(s) of -501# MAX. from a non-wind load case requires uplift connection. See Maximum Reactions.
Refer to DWG PB160160118 for piggyback details.

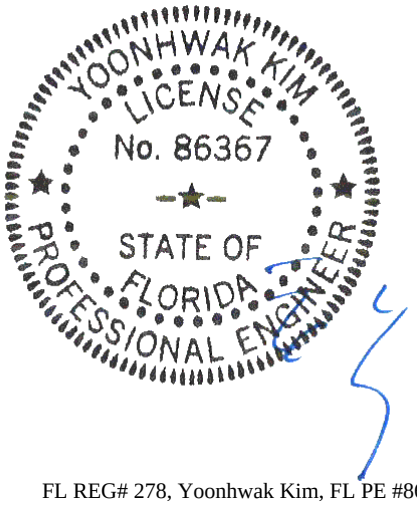

FL REG# 278, Yoonhwak Kim, FL PE #86367
07/01/2021

****WARNING**** READ AND FOLLOW ALL NOTES ON THIS DRAWING!
****IMPORTANT**** FURNISH THIS DRAWING TO ALL CONTRACTORS INCLUDING THE INSTALLERS

Trusses require extreme care in fabricating, handling, shipping, installing and bracing. Refer to and follow the latest edition of BCSI (Building Component Safety Information, by TPI and SBCA) for safety practices prior to performing these functions. Installers shall provide temporary bracing per BCSI. Unless noted otherwise, top chord shall have properly attached structural sheathing and bottom chord shall have a properly attached rigid ceiling. Locations shown for permanent lateral restraint of webs shall have bracing installed per BCSI sections B3, B7, or B10, as applicable. Apply plates to each face of truss and position as shown above and on the Joint Details, unless noted otherwise. Refer to drawings 160A-Z for standard plate positions. Refer to job's General Notes page for additional information.

Alpine, a division of ITW Building Components Group Inc. shall not be responsible for any deviation from this drawing, any failure to build the truss in conformance with ANSI/TPI 1, or for handling, shipping, installation and bracing of trusses. A seal on this drawing or cover page listing this drawing, indicates acceptance of professional engineering responsibility solely for the design shown. The suitability and use of this drawing for any structure is the responsibility of the Building Designer per ANSI/TPI 1 Sec.2.

For more information see these web sites: Alpine: alpineitw.com; TPI: tpinst.org; SBCA: sbcindustry.com; ICC: iccsafe.org; AWC: awc.org

ALPINE AN ITW COMPANY
6750 Forum Drive
Suite 305
Orlando FL, 32821

SEQN: 626670 GABL FROM: CDM	Ply: 1 Qty: 4	**Job Number:** 21-5719 Jones/Freeman **Truss Label:** PB06	Cust: R 215 JRef:1X6P2150009 T14 DrwNo: 182.21.1414.46023 / YK 07/01/2021

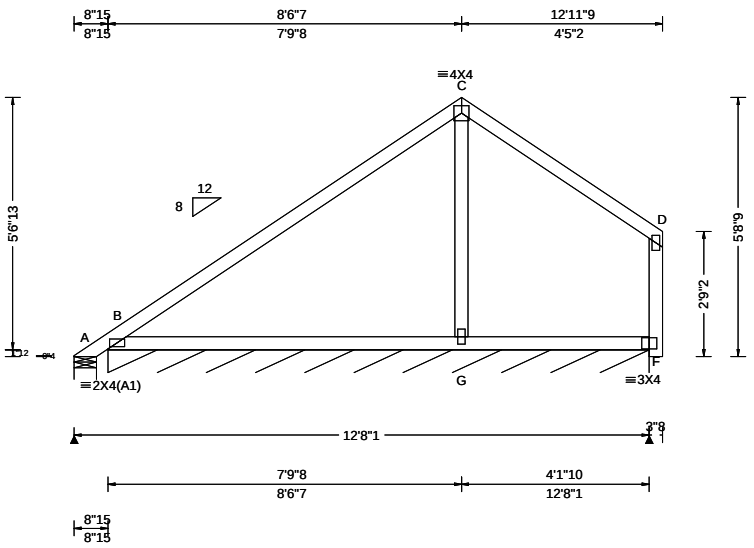

Loading Criteria (psf)

TCLL: 20.00
TCDL: 10.00
BCLL: 0.00
BCDL: 10.00
Des Ld: 40.00
NCBCLL: 10.00
Soffit: 2.00
Load Duration: 1.25
Spacing: 24.0 "

Wind Criteria

Wind Std: ASCE 7-16
Speed: 130 mph
Enclosure: Closed
Risk Category: II
EXP: C Kzt: NA
Mean Height: 18.25 ft
TCDL: 5.0 psf
BCDL: 5.0 psf
MWFRS Parallel Dist: h to 2h
C&C Dist a: 3.73 ft
Loc. from endwall: not in 9.00 ft
GCpi: 0.18
Wind Duration: 1.60

Snow Criteria (Pg,Pf in PSF)

Pg: NA Ct: NA CAT: NA
Pf: NA Ce: NA
Lu: NA Cs: NA
Snow Duration: NA

Building Code:
FBC 7th Ed. 2020 Res.
TPI Std: 2014
Rep Fac: Yes
FT/RT:20(0)/10(0)
Plate Type(s):
WAVE

Defl/CSI Criteria

PP Deflection in	loc	L/defl	L/#
VERT(LL): 0.006	G	999	240
VERT(CL): 0.011	G	999	180
HORZ(LL): 0.005	G	-	-
HORZ(TL): 0.008	G	-	-

Creep Factor: 2.0
Max TC CSI: 0.780
Max BC CSI: 0.178
Max Web CSI: 0.174

VIEW Ver: 21.01.01A.0521.20

▲ Maximum Reactions (lbs), or *=PLF

	Gravity			Non-Gravity		
Loc	R+	/ R-	/ Rh	/ Rw	/ U	/ RL
A	-	/-521	/-	/295	/541	/156
B*	116	/-	/-	/99	/29	/-
B		/-311				

Wind reactions based on MWFRS
A Brg Width = 5.9 Min Req = 1.5
B Brg Width = 143 Min Req = -
Bearings A & B are a rigid surface.
Members not listed have forces less than 375#

Maximum Top Chord Forces Per Ply (lbs)

Chords	Tens.	Comp.
A - B	419	- 299

Lumber

Top chord: 2x4 SP #2;
Bot chord: 2x4 SP #2;
Webs: 2x4 SP #3;

Plating Notes

All plates are 2X4 except as noted.

Wind

Wind loads based on MWFRS with additional C&C member design.

Right end vertical not exposed to wind pressure.

Wind loading based on both gable and hip roof types.

Additional Notes

Negative reaction(s) of -521# MAX. from a non-wind load case requires uplift connection. See Maximum Reactions.

Refer to DWG PB160160118 for piggyback details.

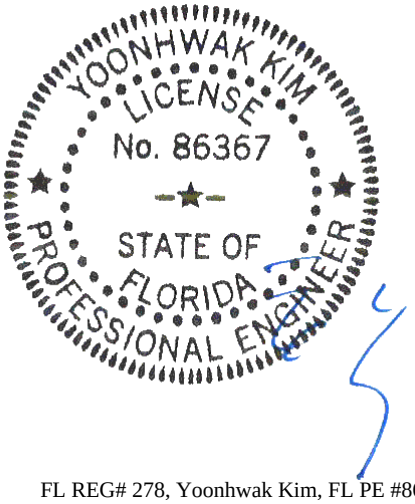

FL REG# 278, Yoonhwak Kim, FL PE #86367
07/01/2021

****WARNING**** READ AND FOLLOW ALL NOTES ON THIS DRAWING!
****IMPORTANT**** FURNISH THIS DRAWING TO ALL CONTRACTORS INCLUDING THE INSTALLERS

Trusses require extreme care in fabricating, handling, shipping, installing and bracing. Refer to and follow the latest edition of BCSI (Building Component Safety Information, by TPI and SBCA) for safety practices prior to performing these functions. Installers shall provide temporary bracing per BCSI. Unless noted otherwise, top chord shall have properly attached structural sheathing and bottom chord shall have a properly attached rigid ceiling. Locations shown for permanent lateral restraint of webs shall have bracing installed per BCSI sections B3, B7, or B10, as applicable. Apply plates to each face of truss and position as shown above and on the Joint Details, unless noted otherwise. Refer to drawings 160A-Z for standard plate positions. Refer to job's General Notes page for additional information.

Alpine, a division of ITW Building Components Group Inc. shall not be responsible for any deviation from this drawing, any failure to build the truss in conformance with ANSI/TPI 1, or for handling, shipping, installation and bracing of trusses. A seal on this drawing or cover page listing this drawing, indicates acceptance of professional engineering responsibility solely for the design shown. The suitability and use of this drawing for any structure is the responsibility of the Building Designer per ANSI/TPI 1 Sec.2.

For more information see these web sites: Alpine: alpineitw.com; TPI: tpinst.org; SBCA: sbcindustry.com; ICC: iccsafe.org; AWC: awc.org

ALPINE AN ITW COMPANY
6750 Forum Drive
Suite 305
Orlando FL, 32821

SEQN: 626760 GABL FROM: CDM	Ply: 1 Qty: 1	**Job Number:** 21-5719 Jones/Freeman **Truss Label:** PB07	Cust: R 215 JRef:1X6P2150009 T54 DrwNo: 182.21.1414.47447 / YK 07/01/2021

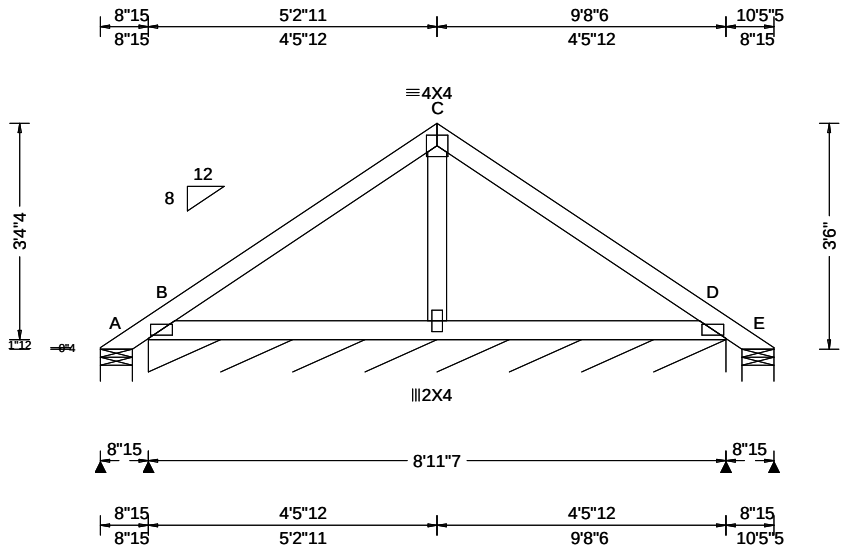

Loading Criteria (psf)

TCLL: 20.00
TCDL: 10.00
BCLL: 0.00
BCDL: 10.00
Des Ld: 40.00
NCBCLL: 10.00
Soffit: 2.00
Load Duration: 1.25
Spacing: 24.0 "

Wind Criteria

Wind Std: ASCE 7-16
Speed: 130 mph
Enclosure: Closed
Risk Category: II
EXP: C Kzt: NA
Mean Height: 17.82 ft
TCDL: 5.0 psf
BCDL: 5.0 psf
MWFRS Parallel Dist: h to 2h
C&C Dist a: 3.00 ft
Loc. from endwall: not in 13.00 ft
GCpi: 0.18
Wind Duration: 1.60

Snow Criteria (Pg,Pf in PSF)

Pg: NA Ct: NA CAT: NA
Pf: NA Ce: NA
Lu: NA Cs: NA
Snow Duration: NA

Building Code:
FBC 7th Ed. 2020 Res.
TPI Std: 2014
Rep Fac: Yes
FT/RT:20(0)/10(0)
Plate Type(s):
WAVE

Defl/CSI Criteria

PP Deflection in	loc	L/defl	L/#
VERT(LL): 0.001	F	999	240
VERT(CL): 0.003	F	999	180
HORZ(LL): -0.001	F	-	-
HORZ(TL): 0.002	F	-	-

Creep Factor: 2.0
Max TC CSI: 0.222
Max BC CSI: 0.092
Max Web CSI: 0.027

VIEW Ver: 21.01.01A.0521.20

▲Maximum Reactions (lbs), or *=PLF

	Gravity			Non-Gravity		
Loc	R+	/ R-	/ Rh	/ Rw	/ U	/ RL
A	-	/-118	/-	/110	/159	/99
B*	101	/-	/-	/70	/17	/-
E	-	/-116	/-	/55	/104	/-
B		/-130				
D		/-105				

Wind reactions based on MWFRS
A Brg Width = 5.9 Min Req = 1.5
B Brg Width = 107 Min Req = -
E Brg Width = 5.9 Min Req = 1.5
Bearings A, B, & E are a rigid surface.
Members not listed have forces less than 375#

Lumber

Top chord: 2x4 SP #2;
Bot chord: 2x4 SP #2;
Webs: 2x4 SP #3;

Plating Notes

All plates are 2X4(A1) except as noted.

Loading

Gable end supports 8" max rake overhang. Top chord must not be cut or notched.

Wind

Wind loads based on MWFRS.

Wind loading based on both gable and hip roof types.

Additional Notes

See DWGS A14030ENC160118 & GBLLETIN0118 for gable wind bracing and other requirements.

Refer to DWG PB160160118 for piggyback details.

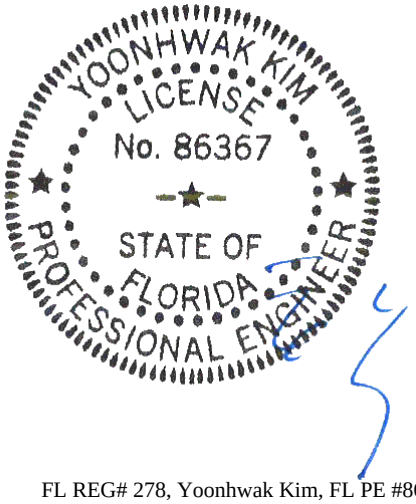

FL REG# 278, Yoonhwak Kim, FL PE #86367
07/01/2021

****WARNING**** READ AND FOLLOW ALL NOTES ON THIS DRAWING!
****IMPORTANT**** FURNISH THIS DRAWING TO ALL CONTRACTORS INCLUDING THE INSTALLERS

Trusses require extreme care in fabricating, handling, shipping, installing and bracing. Refer to and follow the latest edition of BCSI (Building Component Safety Information, by TPI and SBCA) for safety practices prior to performing these functions. Installers shall provide temporary bracing per BCSI. Unless noted otherwise, top chord shall have properly attached structural sheathing and bottom chord shall have a properly attached rigid ceiling. Locations shown for permanent lateral restraint of webs shall have bracing installed per BCSI sections B3, B7, or B10, as applicable. Apply plates to each face of truss and position as shown above and on the Joint Details, unless noted otherwise. Refer to drawings 160A-Z for standard plate positions. Refer to job's General Notes page for additional information.

Alpine, a division of ITW Building Components Group Inc. shall not be responsible for any deviation from this drawing, any failure to build the truss in conformance with ANSI/TPI 1, or for handling, shipping, installation and bracing of trusses. A seal on this drawing or cover page listing this drawing, indicates acceptance of professional engineering responsibility solely for the design shown. The suitability and use of this drawing for any structure is the responsibility of the Building Designer per ANSI/TPI 1 Sec.2.

For more information see these web sites: Alpine: alpineitw.com; TPI: tpinst.org; SBCA: sbcindustry.com; ICC: iccsafe.org; AWC: awc.org

ALPINE AN ITW COMPANY
6750 Forum Drive
Suite 305
Orlando FL, 32821

SEQN: 626746 GABL FROM: CDM	Ply: 1 Qty: 1	**Job Number:** 21-5719 Jones/Freeman **Truss Label:** PB08	Cust: R 215 JRef:1X6P2150009 T49 DrwNo: 182.21.1414.48740 / YK 07/01/2021

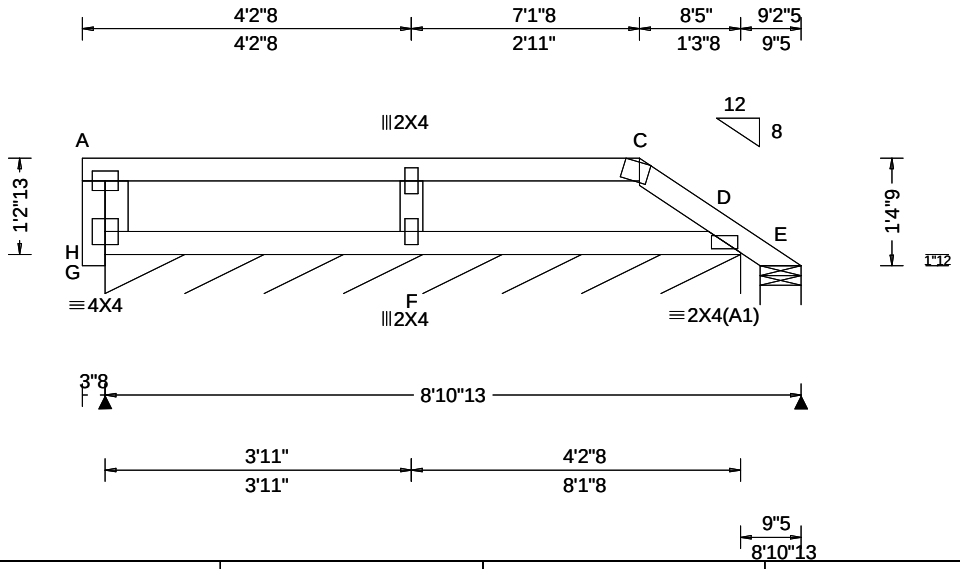

Loading Criteria (psf)

TCLL: 20.00
TCDL: 10.00
BCLL: 0.00
BCDL: 10.00
Des Ld: 40.00
NCBCLL: 10.00
Soffit: 2.00
Load Duration: 1.25
Spacing: 24.0 "

Wind Criteria

Wind Std: ASCE 7-16
Speed: 130 mph
Enclosure: Closed
Risk Category: II
EXP: C Kzt: NA
Mean Height: 16.05 ft
TCDL: 5.0 psf
BCDL: 5.0 psf
MWFRS Parallel Dist: h to 2h
C&C Dist a: 3.00 ft
Loc. from endwall: not in 9.00 ft
GCpi: 0.18
Wind Duration: 1.60

Snow Criteria (Pg,Pf in PSF)

Pg: NA Ct: NA CAT: NA
Pf: NA Ce: NA
Lu: NA Cs: NA
Snow Duration: NA

Building Code:
FBC 7th Ed. 2020 Res.
TPI Std: 2014
Rep Fac: Yes
FT/RT:20(0)/10(0)
Plate Type(s):
WAVE

Defl/CSI Criteria

PP Deflection in	loc	L/defl	L/#
VERT(LL): 0.007	C	999	240
VERT(CL): 0.012	C	999	180
HORZ(LL): -0.005	C	-	-
HORZ(TL): 0.009	C	-	-

Creep Factor: 2.0
Max TC CSI: 0.277
Max BC CSI: 0.069
Max Web CSI: 0.088

VIEW Ver: 21.01.01A.0521.20

▲Maximum Reactions (lbs), or *=PLF

	Gravity			Non-Gravity		
Loc	R+	/ R-	/ Rh	/ Rw	/ U	/ RL
H*	81	/-	/-	/52	/25	/4
E	-	/-50	/-	/22	/27	/-
F		/-107				

Wind reactions based on MWFRS
H Brg Width = 97.5 Min Req = -
E Brg Width = 6.3 Min Req = 1.5
Bearings H & E are a rigid surface.
Members not listed have forces less than 375#

Lumber

Top chord: 2x4 SP #2;
Bot chord: 2x4 SP #2;
Webs: 2x4 SP #3;

Plating Notes

All plates are 3X4 except as noted.

Loading

Gable end supports 8" max rake overhang. Top chord must not be cut or notched.

Wind

Wind loads based on MWFRS with additional C&C member design.

Left end vertical not exposed to wind pressure.

Wind loading based on both gable and hip roof types.

Additional Notes

See DWGS A14030ENC160118 & GBLLETIN0118 for gable wind bracing and other requirements.

Refer to DWG PB160160118 for piggyback details.

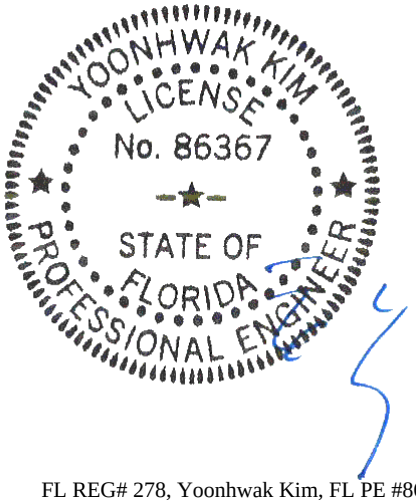

FL REG# 278, Yoonhwak Kim, FL PE #86367
07/01/2021

****WARNING**** READ AND FOLLOW ALL NOTES ON THIS DRAWING!
****IMPORTANT**** FURNISH THIS DRAWING TO ALL CONTRACTORS INCLUDING THE INSTALLERS

Trusses require extreme care in fabricating, handling, shipping, installing and bracing. Refer to and follow the latest edition of BCSI (Building Component Safety Information, by TPI and SBCA) for safety practices prior to performing these functions. Installers shall provide temporary bracing per BCSI. Unless noted otherwise, top chord shall have properly attached structural sheathing and bottom chord shall have a properly attached rigid ceiling. Locations shown for permanent lateral restraint of webs shall have bracing installed per BCSI sections B3, B7, or B10, as applicable. Apply plates to each face of truss and position as shown above and on the Joint Details, unless noted otherwise. Refer to drawings 160A-Z for standard plate positions. Refer to job's General Notes page for additional information.

Alpine, a division of ITW Building Components Group Inc. shall not be responsible for any deviation from this drawing, any failure to build the truss in conformance with ANSI/TPI 1, or for handling, shipping, installation and bracing of trusses. A seal on this drawing or cover page listing this drawing, indicates acceptance of professional engineering responsibility solely for the design shown. The suitability and use of this drawing for any structure is the responsibility of the Building Designer per ANSI/TPI 1 Sec.2.

For more information see these web sites: Alpine: alpineitw.com; TPI: tpinst.org; SBCA: sbcindustry.com; ICC: iccsafe.org; AWC: awc.org

ALPINE AN ITW COMPANY
6750 Forum Drive
Suite 305
Orlando FL, 32821

SEQN: 626748 GABL FROM: CDM	Ply: 1 Qty: 1	**Job Number:** 21-5719 Jones/Freeman **Truss Label:** PB09	Cust: R 215 JRef:1X6P2150009 T47 DrwNo: 182.21.1414.50397 / YK 07/01/2021

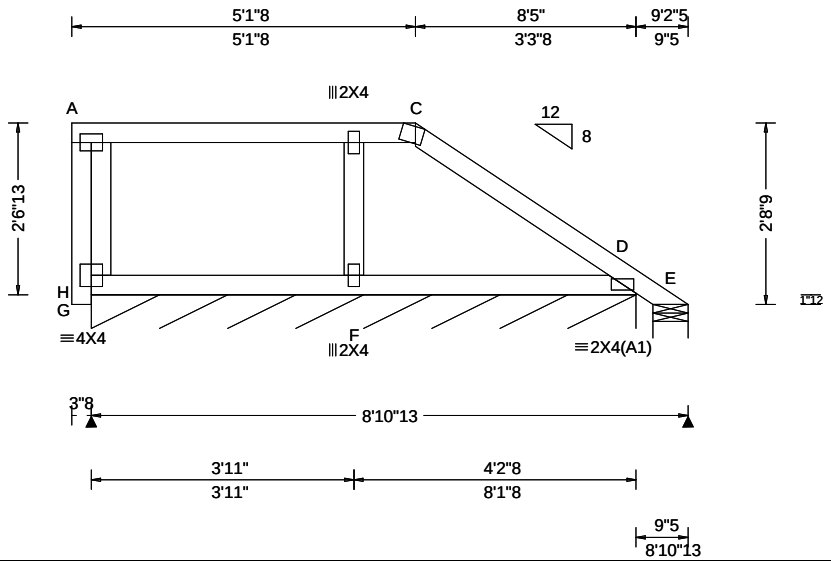

Loading Criteria (psf)

TCLL: 20.00
TCDL: 10.00
BCLL: 0.00
BCDL: 10.00
Des Ld: 40.00
NCBCLL: 10.00
Soffit: 2.00
Load Duration: 1.25
Spacing: 24.0 "

Wind Criteria

Wind Std: ASCE 7-16
Speed: 130 mph
Enclosure: Closed
Risk Category: II
EXP: C Kzt: NA
Mean Height: 16.72 ft
TCDL: 5.0 psf
BCDL: 5.0 psf
MWFRS Parallel Dist: h to 2h
C&C Dist a: 3.00 ft
Loc. from endwall: not in 9.00 ft
GCpi: 0.18
Wind Duration: 1.60

Snow Criteria (Pg,Pf in PSF)

Pg: NA Ct: NA CAT: NA
Pf: NA Ce: NA
Lu: NA Cs: NA
Snow Duration: NA

Building Code:
FBC 7th Ed. 2020 Res.
TPI Std: 2014
Rep Fac: Yes
FT/RT:20(0)/10(0)
Plate Type(s):
WAVE

Defl/CSI Criteria

PP Deflection in	loc	L/defl	L/#
VERT(LL): 0.006	C	999	240
VERT(CL): 0.014	C	999	180
HORZ(LL): -0.004	C	-	-
HORZ(TL): 0.010	C	-	-

Creep Factor: 2.0
Max TC CSI: 0.221
Max BC CSI: 0.071
Max Web CSI: 0.061

VIEW Ver: 21.01.01A.0521.20

▲Maximum Reactions (lbs), or *=PLF

	Gravity			Non-Gravity		
Loc	R+	/ R-	/ Rh	/ Rw	/ U	/ RL
H*	81	/-	/-	/61	/23	/8
E	-	/-70	/-	/34	/58	/-
F		/-112				

Wind reactions based on MWFRS
H Brg Width = 97.5 Min Req = -
E Brg Width = 6.3 Min Req = 1.5
Bearings H & E are a rigid surface.
Members not listed have forces less than 375#

Lumber

Top chord: 2x4 SP #2;
Bot chord: 2x4 SP #2;
Webs: 2x4 SP #3;

Plating Notes

All plates are 3X4 except as noted.

Loading

Gable end supports 8" max rake overhang. Top chord must not be cut or notched.

Wind

Wind loads based on MWFRS with additional C&C member design.

Left end vertical not exposed to wind pressure.

Wind loading based on both gable and hip roof types.

Additional Notes

See DWGS A14030ENC160118 & GBLLETIN0118 for gable wind bracing and other requirements.

Refer to DWG PB160160118 for piggyback details.

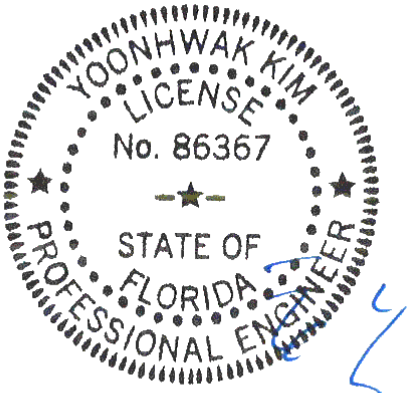

FL REG# 278, Yoonhwak Kim, FL PE #86367
07/01/2021

****WARNING**** READ AND FOLLOW ALL NOTES ON THIS DRAWING!
****IMPORTANT**** FURNISH THIS DRAWING TO ALL CONTRACTORS INCLUDING THE INSTALLERS

Trusses require extreme care in fabricating, handling, shipping, installing and bracing. Refer to and follow the latest edition of BCSI (Building Component Safety Information, by TPI and SBCA) for safety practices prior to performing these functions. Installers shall provide temporary bracing per BCSI. Unless noted otherwise, top chord shall have properly attached structural sheathing and bottom chord shall have a properly attached rigid ceiling. Locations shown for permanent lateral restraint of webs shall have bracing installed per BCSI sections B3, B7, or B10, as applicable. Apply plates to each face of truss and position as shown above and on the Joint Details, unless noted otherwise. Refer to drawings 160A-Z for standard plate positions. Refer to job's General Notes page for additional information.

Alpine, a division of ITW Building Components Group Inc. shall not be responsible for any deviation from this drawing, any failure to build the truss in conformance with ANSI/TPI 1, or for handling, shipping, installation and bracing of trusses. A seal on this drawing or cover page listing this drawing, indicates acceptance of professional engineering responsibility solely for the design shown. The suitability and use of this drawing for any structure is the responsibility of the Building Designer per ANSI/TPI 1 Sec.2.

For more information see these web sites: Alpine: alpineitw.com; TPI: tpinst.org; SBCA: sbcindustry.com; ICC: iccsafe.org; AWC: awc.org

ALPINE AN ITW COMPANY
6750 Forum Drive
Suite 305
Orlando FL, 32821

SEQN: 626750 GABL FROM: CDM	Ply: 1 Qty: 1	**Job Number:** 21-5719 Jones/Freeman **Truss Label:** PB10	Cust: R 215 JRef:1X6P2150009 T39 DrwNo: 182.21.1414.51850 / YK 07/01/2021

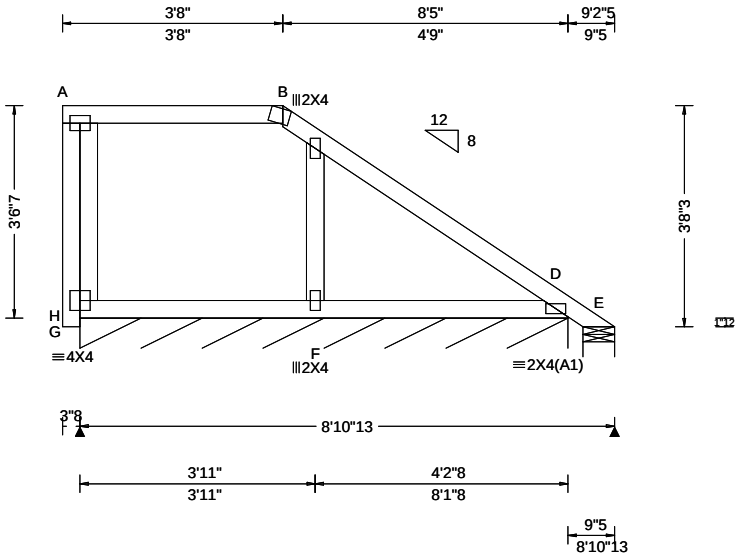

Loading Criteria (psf)

TCLL: 20.00
TCDL: 10.00
BCLL: 0.00
BCDL: 10.00
Des Ld: 40.00
NCBCLL: 10.00
Soffit: 2.00
Load Duration: 1.25
Spacing: 24.0 "

Wind Criteria

Wind Std: ASCE 7-16
Speed: 130 mph
Enclosure: Closed
Risk Category: II
EXP: C Kzt: NA
Mean Height: 17.21 ft
TCDL: 5.0 psf
BCDL: 5.0 psf
MWFRS Parallel Dist: h to 2h
C&C Dist a: 3.00 ft
Loc. from endwall: not in 9.00 ft
GCpi: 0.18
Wind Duration: 1.60

Snow Criteria (Pg,Pf in PSF)

Pg: NA Ct: NA CAT: NA
Pf: NA Ce: NA
Lu: NA Cs: NA
Snow Duration: NA

Building Code:
FBC 7th Ed. 2020 Res.
TPI Std: 2014
Rep Fac: Yes
FT/RT:20(0)/10(0)
Plate Type(s):
WAVE

Defl/CSI Criteria

PP Deflection in	loc	L/defl	L/#
VERT(LL): 0.007	B	999	240
VERT(CL): 0.016	B	999	180
HORZ(LL): -0.005	B	-	-
HORZ(TL): 0.011	B	-	-

Creep Factor: 2.0
Max TC CSI: 0.223
Max BC CSI: 0.073
Max Web CSI: 0.068

VIEW Ver: 21.01.01A.0521.20

▲Maximum Reactions (lbs), or *=PLF

	Gravity			Non-Gravity		
Loc	R+	/ R-	/ Rh	/ Rw	/ U	/ RL
H*	81	/-	/-	/65	/21	/12
E	-	/-69	/-	/38	/61	/-
F		/-108				

Wind reactions based on MWFRS
H Brg Width = 97.5 Min Req = -
E Brg Width = 6.3 Min Req = 1.5
Bearings H & E are a rigid surface.
Members not listed have forces less than 375#

Lumber

Top chord: 2x4 SP #2;
Bot chord: 2x4 SP #2;
Webs: 2x4 SP #3;

Plating Notes

All plates are 3X4 except as noted.

Loading

Gable end supports 8" max rake overhang. Top chord must not be cut or notched.

Wind

Wind loads based on MWFRS with additional C&C member design.

Left end vertical not exposed to wind pressure.

Wind loading based on both gable and hip roof types.

Additional Notes

See DWGS A14030ENC160118 & GBLLETIN0118 for gable wind bracing and other requirements.

Refer to DWG PB160160118 for piggyback details.

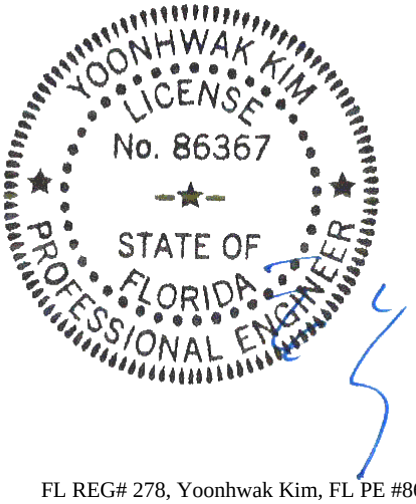

FL REG# 278, Yoonhwak Kim, FL PE #86367
07/01/2021

****WARNING**** READ AND FOLLOW ALL NOTES ON THIS DRAWING!
****IMPORTANT**** FURNISH THIS DRAWING TO ALL CONTRACTORS INCLUDING THE INSTALLERS

Trusses require extreme care in fabricating, handling, shipping, installing and bracing. Refer to and follow the latest edition of BCSI (Building Component Safety Information, by TPI and SBCA) for safety practices prior to performing these functions. Installers shall provide temporary bracing per BCSI. Unless noted otherwise, top chord shall have properly attached structural sheathing and bottom chord shall have a properly attached rigid ceiling. Locations shown for permanent lateral restraint of webs shall have bracing installed per BCSI sections B3, B7, or B10, as applicable. Apply plates to each face of truss and position as shown above and on the Joint Details, unless noted otherwise. Refer to drawings 160A-Z for standard plate positions. Refer to job's General Notes page for additional information.

Alpine, a division of ITW Building Components Group Inc. shall not be responsible for any deviation from this drawing, any failure to build the truss in conformance with ANSI/TPI 1, or for handling, shipping, installation and bracing of trusses. A seal on this drawing or cover page listing this drawing, indicates acceptance of professional engineering responsibility solely for the design shown. The suitability and use of this drawing for any structure is the responsibility of the Building Designer per ANSI/TPI 1 Sec.2.

For more information see these web sites: Alpine: alpineitw.com; TPI: tpinst.org; SBCA: sbcindustry.com; ICC: iccsafe.org; AWC: awc.org

ALPINE
AN ITW COMPANY
6750 Forum Drive
Suite 305
Orlando FL, 32821

SEQN: 626752 GABL FROM: CDM	Ply: 1 Qty: 1	**Job Number:** 21-5719 Jones/Freeman **Truss Label:** PB11	Cust: R 215 JRef:1X6P2150009 T1 DrwNo: 182.21.1414.53233 / YK 07/01/2021

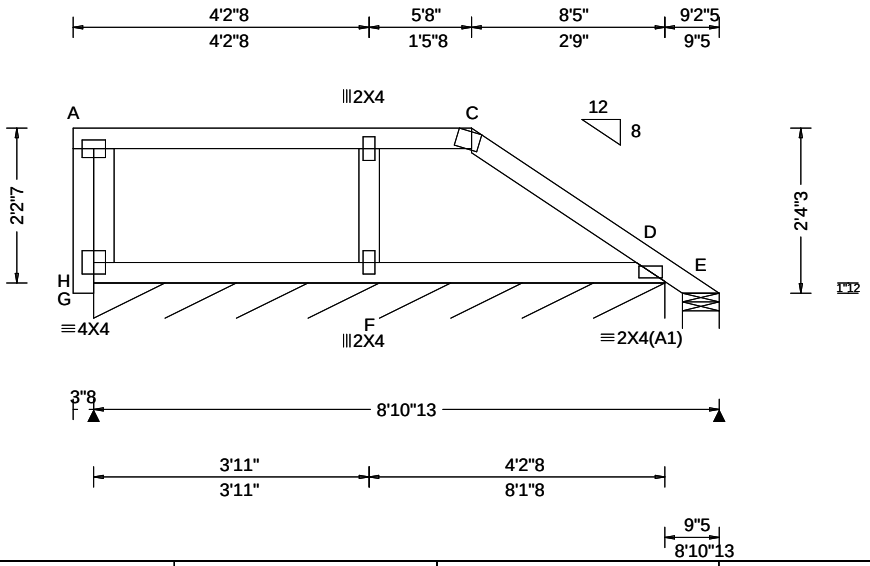

Loading Criteria (psf)

TCLL: 20.00
TCDL: 10.00
BCLL: 0.00
BCDL: 10.00
Des Ld: 40.00
NCBCLL: 10.00
Soffit: 2.00
Load Duration: 1.25
Spacing: 24.0 "

Wind Criteria

Wind Std: ASCE 7-16
Speed: 130 mph
Enclosure: Closed
Risk Category: II
EXP: C Kzt: NA
Mean Height: 16.54 ft
TCDL: 5.0 psf
BCDL: 5.0 psf
MWFRS Parallel Dist: h to 2h
C&C Dist a: 3.00 ft
Loc. from endwall: not in 9.00 ft
GCpi: 0.18
Wind Duration: 1.60

Snow Criteria (Pg,Pf in PSF)

Pg: NA Ct: NA CAT: NA
Pf: NA Ce: NA
Lu: NA Cs: NA
Snow Duration: NA

Building Code:
FBC 7th Ed. 2020 Res.
TPI Std: 2014
Rep Fac: Yes
FT/RT:20(0)/10(0)
Plate Type(s):
WAVE

Defl/CSI Criteria

PP Deflection in	loc	L/defl	L/#
VERT(LL): 0.009	C	999	240
VERT(CL): 0.015	C	999	180
HORZ(LL): -0.006	C	-	-
HORZ(TL): 0.010	C	-	-

Creep Factor: 2.0
Max TC CSI: 0.229
Max BC CSI: 0.070
Max Web CSI: 0.090

VIEW Ver: 21.01.01A.0521.20

▲Maximum Reactions (lbs), or *=PLF

	Gravity			Non-Gravity		
Loc	R+	/ R-	/ Rh	/ Rw	/ U	/ RL
H*	81	/-	/-	/59	/24	/7
E	-	/-54	/-	/29	/53	/-
F		/-112				

Wind reactions based on MWFRS
H Brg Width = 97.5 Min Req = -
E Brg Width = 6.3 Min Req = 1.5
Bearings H & E are a rigid surface.
Members not listed have forces less than 375#

Lumber

Top chord: 2x4 SP #2;
Bot chord: 2x4 SP #2;
Webs: 2x4 SP #3;

Plating Notes

All plates are 3X4 except as noted.

Loading

Gable end supports 8" max rake overhang. Top chord must not be cut or notched.

Wind

Wind loads based on MWFRS with additional C&C member design.

Left end vertical not exposed to wind pressure.

Wind loading based on both gable and hip roof types.

Additional Notes

See DWGS A14030ENC160118 & GBLLETIN0118 for gable wind bracing and other requirements.

Refer to DWG PB160160118 for piggyback details.

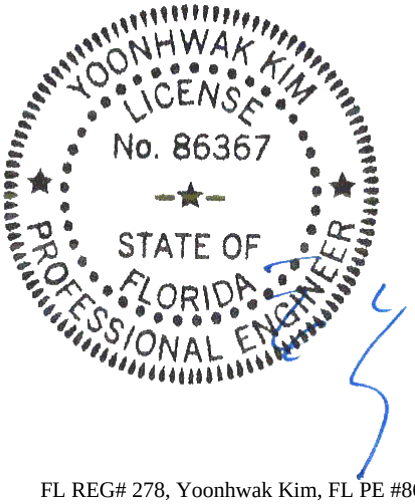

FL REG# 278, Yoonhwak Kim, FL PE #86367
07/01/2021

****WARNING**** READ AND FOLLOW ALL NOTES ON THIS DRAWING!
****IMPORTANT**** FURNISH THIS DRAWING TO ALL CONTRACTORS INCLUDING THE INSTALLERS

Trusses require extreme care in fabricating, handling, shipping, installing and bracing. Refer to and follow the latest edition of BCSI (Building Component Safety Information, by TPI and SBCA) for safety practices prior to performing these functions. Installers shall provide temporary bracing per BCSI. Unless noted otherwise, top chord shall have properly attached structural sheathing and bottom chord shall have a properly attached rigid ceiling. Locations shown for permanent lateral restraint of webs shall have bracing installed per BCSI sections B3, B7, or B10, as applicable. Apply plates to each face of truss and position as shown above and on the Joint Details, unless noted otherwise. Refer to drawings 160A-Z for standard plate positions. Refer to job's General Notes page for additional information.

Alpine, a division of ITW Building Components Group Inc. shall not be responsible for any deviation from this drawing, any failure to build the truss in conformance with ANSI/TPI 1, or for handling, shipping, installation and bracing of trusses. A seal on this drawing or cover page listing this drawing, indicates acceptance of professional engineering responsibility solely for the design shown. The suitability and use of this drawing for any structure is the responsibility of the Building Designer per ANSI/TPI 1 Sec.2.

For more information see these web sites: Alpine: alpineitw.com; TPI: tpinst.org; SBCA: sbcindustry.com; ICC: iccsafe.org; AWC: awc.org

ALPINE AN ITW COMPANY
6750 Forum Drive
Suite 305
Orlando FL, 32821

SEQN: 626756 GABL FROM: CDM	Ply: 1 Qty: 1	**Job Number:** 21-5719 Jones/Freeman **Truss Label:** PB12	Cust: R 215 JRef:1X6P2150009 T2 DrwNo: 182.21.1414.57373 / YK 07/01/2021

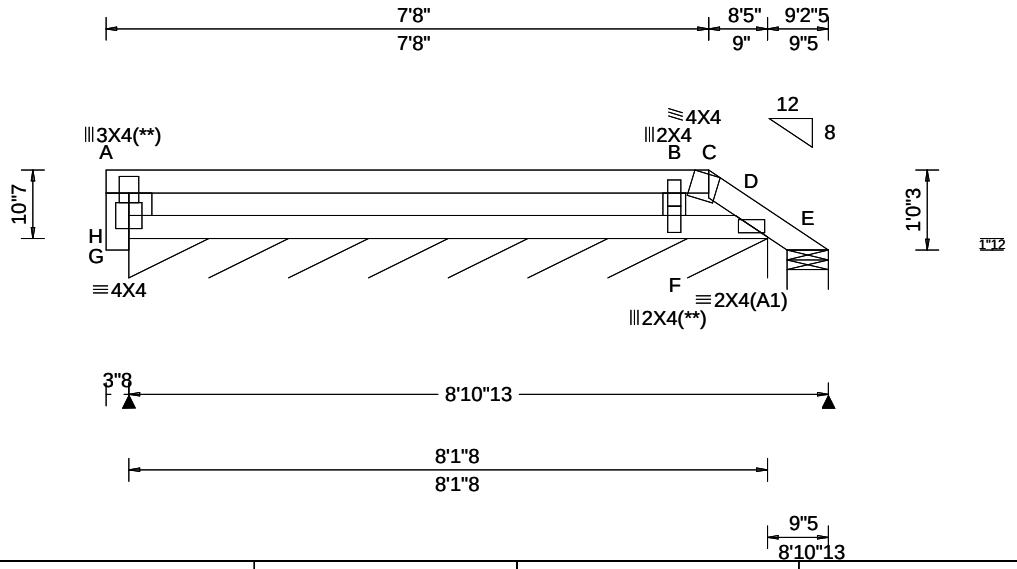

Loading Criteria (psf)
TCLL: 20.00
TCDL: 10.00
BCLL: 0.00
BCDL: 10.00
Des Ld: 40.00
NCBCLL: 10.00
Soffit: 2.00
Load Duration: 1.25
Spacing: 24.0 "

Wind Criteria
Wind Std: ASCE 7-16
Speed: 130 mph
Enclosure: Closed
Risk Category: II
EXP: C Kzt: NA
Mean Height: 15.87 ft
TCDL: 5.0 psf
BCDL: 5.0 psf
MWFRS Parallel Dist: h to 2h
C&C Dist a: 3.00 ft
Loc. from endwall: not in 9.00 ft
GCpi: 0.18
Wind Duration: 1.60

Snow Criteria (Pg,Pf in PSF)
Pg: NA Ct: NA CAT: NA
Pf: NA Ce: NA
Lu: NA Cs: NA
Snow Duration: NA

Building Code:
FBC 7th Ed. 2020 Res.
TPI Std: 2014
Rep Fac: Yes
FT/RT:20(0)/10(0)
Plate Type(s):
WAVE

Defl/CSI Criteria

PP Deflection in	loc	L/defl	L/#
VERT(LL): -0.005	C	999	240
VERT(CL): -0.009	C	999	180
HORZ(LL): 0.004	A	-	-
HORZ(TL): 0.007	A	-	-

Creep Factor: 2.0
Max TC CSI: 0.657
Max BC CSI: 0.169
Max Web CSI: 0.205

VIEW Ver: 21.01.01A.0521.20

▲Maximum Reactions (lbs), or *=PLF

	Gravity			Non-Gravity		
Loc	R+	/ R-	/ Rh	/ Rw	/ U	/ RL
H*	63	/-	/-	/41	/19	/3
E	96	/-	/-	/52	/33	/-
D		/-343				

Wind reactions based on MWFRS
H Brg Width = 97.5 Min Req = -
E Brg Width = 6.3 Min Req = 1.5
Bearings H & E are a rigid surface.
Members not listed have forces less than 375#

Maximum Web Forces Per Ply (lbs)

Webs	Tens.	Comp.
B - F	688	-656

Lumber
Top chord: 2x4 SP #2;
Bot chord: 2x4 SP #2;
Webs: 2x4 SP #3;

Plating Notes
(**) 2 plate(s) require special positioning. Refer to scaled plate plot details for special positioning requirements.

Loading
Gable end supports 8" max rake overhang. Top chord must not be cut or notched.

Wind
Wind loads based on MWFRS with additional C&C member design.
Left end vertical not exposed to wind pressure.
Wind loading based on both gable and hip roof types.

Additional Notes
See DWGS A14030ENC160118 & GBLLETIN0118 for gable wind bracing and other requirements.
Refer to DWG PB160160118 for piggyback details.

YOONHWAK KIM
LICENSE
No. 86367
STATE OF FLORIDA
PROFESSIONAL ENGINEER

FL REG# 278, Yoonhwak Kim, FL PE #86367
07/01/2021

****WARNING**** READ AND FOLLOW ALL NOTES ON THIS DRAWING!
****IMPORTANT**** FURNISH THIS DRAWING TO ALL CONTRACTORS INCLUDING THE INSTALLERS

Trusses require extreme care in fabricating, handling, shipping, installing and bracing. Refer to and follow the latest edition of BCSI (Building Component Safety Information, by TPI and SBCA) for safety practices prior to performing these functions. Installers shall provide temporary bracing per BCSI. Unless noted otherwise, top chord shall have properly attached structural sheathing and bottom chord shall have a properly attached rigid ceiling. Locations shown for permanent lateral restraint of webs shall have bracing installed per BCSI sections B3, B7, or B10, as applicable. Apply plates to each face of truss and position as shown above and on the Joint Details, unless noted otherwise. Refer to drawings 160A-Z for standard plate positions. Refer to job's General Notes page for additional information.

Alpine, a division of ITW Building Components Group Inc. shall not be responsible for any deviation from this drawing, any failure to build the truss in conformance with ANSI/TPI 1, or for handling, shipping, installation and bracing of trusses. A seal on this drawing or cover page listing this drawing, indicates acceptance of professional engineering responsibility solely for the design shown. The suitability and use of this drawing for any structure is the responsibility of the Building Designer per ANSI/TPI 1 Sec.2.

For more information see these web sites: Alpine: alpineitw.com; TPI: tpinst.org; SBCA: sbcindustry.com; ICC: iccsafe.org; AWC: awc.org

ALPINE
AN ITW COMPANY
6750 Forum Drive
Suite 305
Orlando FL, 32821

Gable Stud Reinforcement Detail

ASCE 7-16: 140 mph Wind Speed, 15' Mean Height, Enclosed, Exposure C, Kzt = 1.00

Or: 120 mph Wind Speed, 15' Mean Height, Partially Enclosed, Exposure C, Kzt = 1.00
Or: 120 mph Wind Speed, 15' Mean Height, Enclosed, Exposure D, Kzt = 1.00
Or: 100 mph Wind Speed, 15' Mean Height, Partially Enclosed, Exposure D, Kzt = 1.00

Max Gable Vertical Length	2x4 Gable Vertical Spacing	Species	Brace Grade	No Braces	(1) 1x4 'L' Brace * Group A	(1) 1x4 'L' Brace * Group B	(1) 2x4 'L' Brace * Group A	(1) 2x4 'L' Brace * Group B	(2) 2x4 'L' Brace ** Group A	(2) 2x4 'L' Brace ** Group B	(1) 2x6 'L' Brace * Group A	(1) 2x6 'L' Brace * Group B	(2) 2x6 'L' Brace ** Group A	(2) 2x6 'L' Brace ** Group B
	24" o.c.	SPF HF	#1 / #2	4' 3"	7' 3"	7' 7"	8' 7"	8' 11"	10' 3"	10' 8"	13' 6"	14' 0"	14' 0"	14' 0"
			#3	4' 1"	6' 7"	7' 1"	8' 6"	8' 10"	10' 1"	10' 6"	13' 4"	13' 10"	14' 0"	14' 0"
			Stud	4' 1"	6' 7"	7' 0"	8' 6"	8' 10"	10' 1"	10' 6"	13' 4"	13' 10"	14' 0"	14' 0"
			Standard	4' 1"	5' 8"	6' 0"	7' 7"	8' 1"	10' 1"	10' 6"	11' 10"	12' 8"	14' 0"	14' 0"
		SP DFL	#1	4' 6"	7' 4"	7' 8"	8' 8"	9' 0"	10' 4"	10' 9"	13' 8"	14' 0"	14' 0"	14' 0"
			#2	4' 3"	7' 3"	7' 7"	8' 7"	8' 11"	10' 3"	10' 8"	13' 6"	14' 0"	14' 0"	14' 0"
			#3	4' 2"	6' 0"	6' 4"	7' 11"	8' 6"	10' 2"	10' 7"	12' 5"	13' 4"	14' 0"	14' 0"
			Stud	4' 2"	6' 0"	6' 4"	7' 11"	8' 6"	10' 2"	10' 7"	12' 5"	13' 4"	14' 0"	14' 0"
			Standard	4' 0"	5' 3"	5' 7"	7' 0"	7' 6"	9' 6"	10' 2"	11' 0"	11' 10"	14' 0"	14' 0"
	16" o.c.	SPF HF	#1 / #2	4' 11"	8' 4"	8' 8"	9' 10"	10' 3"	11' 8"	12' 2"	14' 0"	14' 0"	14' 0"	14' 0"
			#3	4' 8"	8' 1"	8' 8"	9' 8"	10' 1"	11' 7"	12' 1"	14' 0"	14' 0"	14' 0"	14' 0"
			Stud	4' 8"	8' 1"	8' 6"	9' 8"	10' 1"	11' 7"	12' 1"	14' 0"	14' 0"	14' 0"	14' 0"
			Standard	4' 8"	6' 11"	7' 5"	9' 3"	9' 11"	11' 7"	12' 1"	14' 0"	14' 0"	14' 0"	14' 0"
		SP DFL	#1	5' 1"	8' 5"	8' 9"	9' 11"	10' 4"	11' 10"	12' 4"	14' 0"	14' 0"	14' 0"	14' 0"
			#2	4' 11"	8' 4"	8' 8"	9' 10"	10' 3"	11' 8"	12' 2"	14' 0"	14' 0"	14' 0"	14' 0"
			#3	4' 9"	7' 4"	7' 9"	9' 9"	10' 2"	11' 8"	12' 1"	14' 0"	14' 0"	14' 0"	14' 0"
			Stud	4' 9"	7' 4"	7' 9"	9' 9"	10' 2"	11' 8"	12' 1"	14' 0"	14' 0"	14' 0"	14' 0"
			Standard	4' 8"	6' 5"	6' 10"	8' 7"	9' 2"	11' 7"	12' 1"	13' 6"	14' 0"	14' 0"	14' 0"
	12" o.c.	SPF HF	#1 / #2	5' 5"	9' 2"	9' 6"	10' 10"	11' 3"	11' 8"	13' 5"	14' 0"	14' 0"	14' 0"	14' 0"
			#3	5' 1"	9' 0"	9' 4"	10' 8"	11' 1"	12' 9"	13' 3"	14' 0"	14' 0"	14' 0"	14' 0"
			Stud	5' 1"	9' 0"	9' 4"	10' 8"	11' 1"	12' 9"	13' 3"	14' 0"	14' 0"	14' 0"	14' 0"
			Standard	5' 1"	8' 0"	8' 6"	10' 8"	11' 1"	12' 9"	13' 3"	14' 0"	14' 0"	14' 0"	14' 0"
		SP DFL	#1	5' 8"	9' 3"	9' 8"	10' 11"	11' 4"	13' 0"	13' 6"	14' 0"	14' 0"	14' 0"	14' 0"
			#2	5' 5"	9' 2"	9' 6"	10' 10"	11' 3"	12' 11"	13' 5"	14' 0"	14' 0"	14' 0"	14' 0"
			#3	5' 3"	8' 5"	9' 0"	10' 9"	11' 2"	12' 10"	13' 4"	14' 0"	14' 0"	14' 0"	14' 0"
			Stud	5' 3"	8' 5"	9' 0"	10' 9"	11' 2"	12' 10"	13' 4"	14' 0"	14' 0"	14' 0"	14' 0"
			Standard	5' 1"	7' 5"	7' 11"	9' 11"	10' 7"	12' 9"	13' 3"	14' 0"	14' 0"	14' 0"	14' 0"

Bracing Group Species and Grades:

Group A:

Spruce-Pine-Fir

#1 / #2	Standard
#3	Stud

Hem-Fir

#2	Stud
#3	Standard

Douglas Fir-Larch

#3
Stud
Standard

Southern Pine***

#3
Stud
Standard

Group B:

Hem-Fir

#1 & Btr
#1

Douglas Fir-Larch

#1
#2

Southern Pine***

#1
#2

1x4 Braces shall be SRB (Stress-Rated Board).

***For 1x4 So. Pine use only Industrial 55 or Industrial 45 Stress-Rated Boards. Group B values may be used with these grades.

Gable Truss Detail Notes:

Wind Load deflection criterion is L/240.

Provide uplift connections for 55 plf over continuous bearing (5 psf TC Dead Load).

Gable end supports load from 4' 0" outlookers with 2' 0" overhang, or 12" plywood overhang.

Attach 'L' braces with 10d (0.128"x3.0" min) nails.

* For (1) 'L' brace: space nails at 2" o.c. in 18" end zones and 4" o.c. between zones.

** For (2) 'L' braces: space nails at 3" o.c. in 18" end zones and 6" o.c. between zones.

'L' bracing must be a minimum of 80% of web member length.

Gable Vertical Plate Sizes

Vertical Length	No Splice
Less than 4' 0"	1X4 or 2X3
Greater than 4' 0"	3X4

+ Refer to common truss design for peak, splice, and heel plates.

Refer to the Building Designer for conditions not addressed by this detail.

Diagonal brace option: vertical length may be doubled when diagonal brace is used. Connect diagonal brace for 450# at each end. Max web total length is 14'.

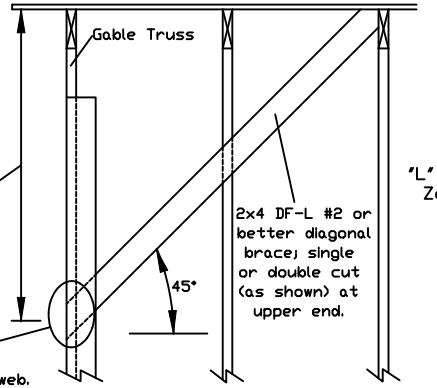

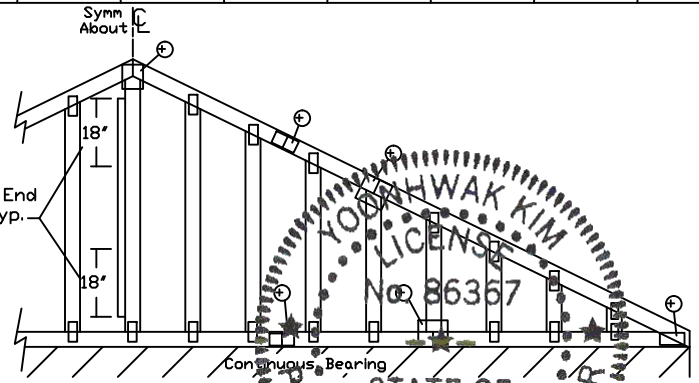

Refer to chart above for max gable vertical length.

YOONHWAK KIM LICENSE No 86367 STATE OF FLORIDA PROFESSIONAL ENGINEER

ALPINE AN ITW COMPANY
514 Earth City Expressway
Suite 242
Earth City, MO 63045

WARNING READ AND FOLLOW ALL NOTES ON THIS DRAWING!
IMPORTANT FURNISH THIS DRAWING TO ALL CONTRACTORS INCLUDING THE INSTALLERS.

Trusses require extreme care in fabricating, handling, shipping, installing and bracing. Refer to and follow the latest edition of BCSI (Building Component Safety Information, by TPI and SBCA) for safety practices prior to performing these functions. Installers shall provide temporary bracing per BCSI. Unless noted otherwise, top chord shall have properly attached structural sheathing and bottom chord shall have a properly attached rigid ceiling. Locations shown for permanent lateral restraint of webs shall have bracing installed per BCSI sections B3, B7 or B10, as applicable. Apply plates to each face of truss and position as shown above and on the Joint Details, unless noted otherwise. Refer to drawings 160A-Z for standard plate positions.

Alpine, a division of ITW Building Components Group Inc. shall not be responsible for any deviation from this drawing, any failure to build the truss in conformance with ANSI/TPI 1, or for handling, shipping, installation & bracing of trusses.

A seal on this drawing or cover page listing this drawing, indicates acceptance of professional engineering responsibility solely for the design shown. The suitability and use of this drawing for any structure is the responsibility of the Building Designer per ANSI/TPI 1 Sec.2.

For more information see this job's general notes page and these web sites: ALPINE: www.alpineitw.com; TPI: www.tpinst.org; SBCA: www.sbcindustry.org; ICC: www.icc-safe.org

07/01/2021

Job# 278, Yoonhwak Kim, FL PE #86367

REF	ASCE7-16-GAB14015
DATE	01/26/2018
DRWG	A14015ENC160118

MAX. TOT. LD. 60 PSF

MAX. SPACING 24.0"

Gable Detail

For Let-in Verticals

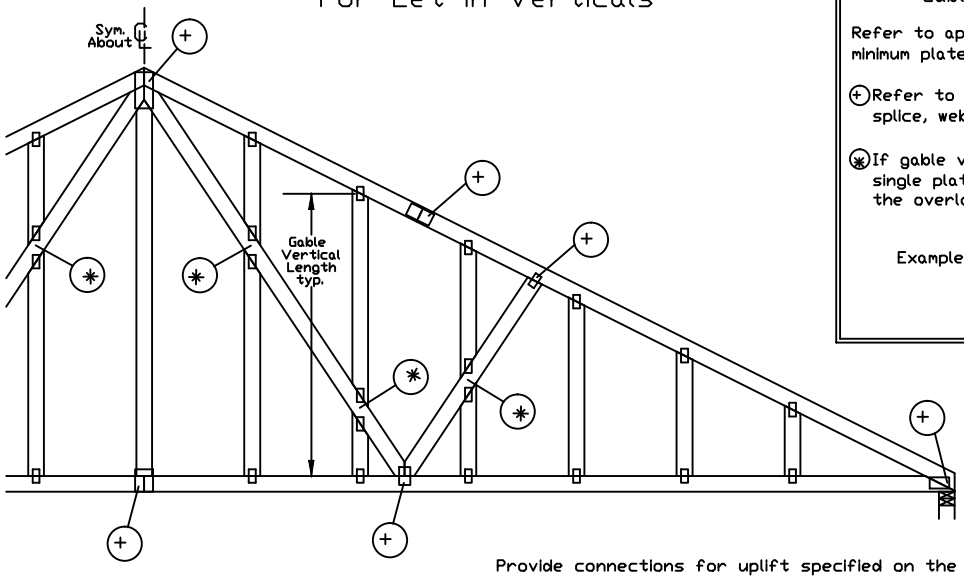

Gable Truss Plate Sizes

Refer to appropriate Alpine gable detail for minimum plate sizes for vertical studs.

(+) Refer to Engineered truss design for peak, splice, web, and heel plates.

(✱) If gable vertical plates overlap, use a single plate that covers the total area of the overlapped plates to span the web.

Example:

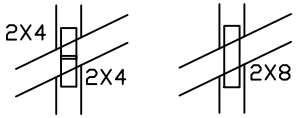

"T" Reinforcement Attachment Detail

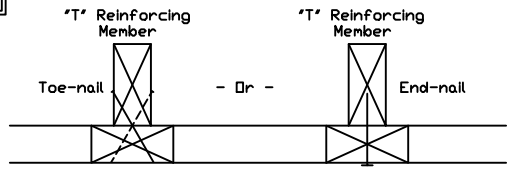

Provide connections for uplift specified on the engineered truss design.

Attach each "T" reinforcing member with

End Driven Nails:
10d Common (0.148"x 3.",min) Nails at 4" o.c. plus
(4) nails in the top and bottom chords.

Toenailed Nails:
10d Common (0.148"x3",min) Toenails at 4" o.c. plus
(4) toenails in the top and bottom chords.

This detail to be used with the appropriate Alpine gable detail for ASCE wind load.

ASCE 7-05 Gable Detail Drawings
A13015051014, A12015051014, A11015051014, A10015051014, A14015051014,
A13030051014, A12030051014, A11030051014, A10030051014, A14030051014

ASCE 7-10 & ASCE 7-16 Gable Detail Drawings
A11515ENC100118, A12015ENC100118, A14015ENC100118, A16015ENC100118,
A18015ENC100118, A20015ENC100118, A20015END100118, A20015PED100118,
A11530ENC100118, A12030ENC100118, A14030ENC100118, A16030ENC100118,
A18030ENC100118, A20030ENC100118, A20030END100118, A20030PED100118,
S11515ENC100118, S12015ENC100118, S14015ENC100118, S16015ENC100118,
S18015ENC100118, S20015ENC100118, S20015END100118, S20015PED100118,
S11530ENC100118, S12030ENC100118, S14030ENC100118, S16030ENC100118,
S18030ENC100118, S20030ENC100118, S20030END100118, S20030PED100118

See appropriate Alpine gable detail for maximum unreinforced gable vertical length.

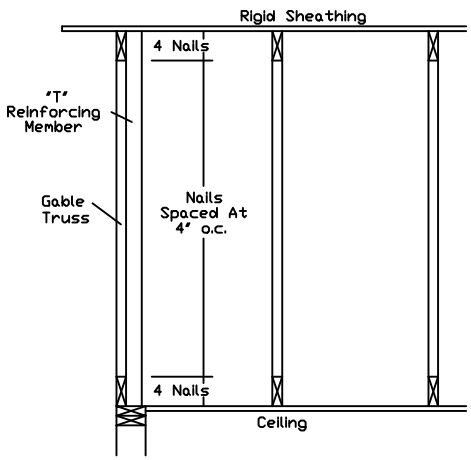

To convert from "L" to "T" reinforcing members, multiply "T" increase by length (based on appropriate Alpine gable detail).

Maximum allowable "T" reinforced gable vertical length is 14' from top to bottom chord.

"T" reinforcing member material must match size, specie, and grade of the "L" reinforcing member.

Web Length Increase w/ "T" Brace

"T" Reinf. Mbr. Size	"T" Increase
2x4	30 %
2x6	20 %

Example:
ASCE 7-10 Wind Speed = 120 mph
Mean Roof Height = 30 ft, Kzt = 1.00
Gable Vertical = 24"o.c. SP #3
"T" Reinforcing Member Size = 2x4
"T" Brace Increase (From Above) = 30% = 1.30
(1) 2x4 "L" Brace Length = 8' 7"
Maximum "T" Reinforced Gable Vertical Length
1.30 x 8' 7" = 11' 2"

YOONHWAK KIM
LICENSE NUMBER 86367
STATE OF FLORIDA
PROFESSIONAL ENGINEER

ALPINE AN ITW COMPANY
514 Earth City Expressway
Suite 242
Earth City, MO 63045

****WARNING** READ AND FOLLOW ALL NOTES ON THIS DRAWING!**
****IMPORTANT** FURNISH THIS DRAWING TO ALL CONTRACTORS INCLUDING THE INSTALLERS.**

Trusses require extreme care in fabricating, handling, shipping, installing and bracing. Refer to and follow the latest edition of BCSI (Building Component Safety Information, by TPI and SBCA) for safety practices prior to performing these functions. Installers shall provide temporary bracing per BCSI. Unless noted otherwise, top chord shall have properly attached structural sheathing and bottom chord shall have a properly attached rigid ceiling. Locations shown for permanent lateral restraint of webs shall have bracing installed per BCSI sections B3, B7 or B10, as applicable. Apply plates to each face of truss and position as shown above and on the Joint Details, unless noted otherwise. Refer to drawings 160A-Z for standard plate positions.

Alpine, a division of ITW Building Components Group Inc. shall not be responsible for any deviation from this drawing, any failure to build the truss in conformance with ANSI/TPI 1, or for handling, shipping, installation & bracing of trusses.

A seal on this drawing or cover page listing this drawing, indicates acceptance of professional engineering responsibility solely for the design shown. The suitability and use of this drawing for any structure is the responsibility of the Building Designer per ANSI/TPI 1 Sec.2.

For more information see this job's general notes page and these web sites: ALPINE: www.alpineitw.com; TPI: www.tpinst.org; SBCA: www.sbcindustry.org; ICC: www.iccsafe.org

REF	LET-IN VERT
DATE	01/02/2018
DRWG	GBLLETIN0118

MAX. TOT. LD.	60 PSF
DUR. FAC.	ANY
MAX. SPACING	24.0"

CLR Reinforcing Member Substitution

This detail is to be used when a Continuous Lateral Restraint (CLR) is specified on a truss design but an alternative web reinforcement method is desired.

Notes:

This detail is only applicable for changing the specified CLR shown on single ply sealed designs to T-reinforcement or L-reinforecement or scab reinforcement.

Alternative reinforcement specified in chart below may be conservative. For minimum alternative reinforcement, re-run design with appropriate reinforcement type.

Use scabs instead of L- or T- reinforcement on webs with intersecting truss joints, such as K-web joints, that may interfere with proper application along the narrow face of the web.

Web Member Size	Specified CLR Restraint	Alternative Reinforecement T- or L- Reinf.	Alternative Reinforecement Scab Reinf.
2x3 or 2x4	1 row	2x4	1-2x4
2x3 or 2x4	2 rows	2x6	2-2x4
2x6	1 row	2x4	1-2x6
2x6	2 rows	2x6	2-2x4(✱)
2x8	1 row	2x6	1-2x8
2x8	2 rows	2x6	2-2x6(✱)

T-reinforcement, L-reinforcement, or scab reinforcement to be same species and grade or better than web member unless specified otherwise on Engineer's sealed design.

(✱) Center scab on wide face of web. Apply (1) scab to each face of web.

T-Reinforcement or L-Reinforcement:

Apply to either side of web narrow face. Attach with 10d (0.128"x3.0",min) nails at 6" o.c. Reinforcing member is a minimum 80% of web member length.

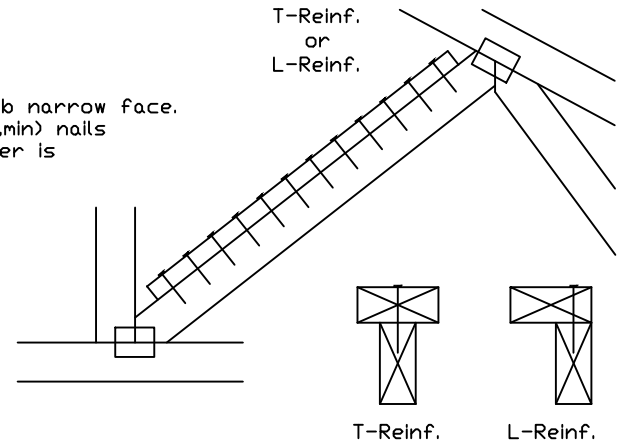

Scab Reinforcement:

Apply scab(s) to wide face of web. No more than (1) scab per face. Attach with 10d (0.128"x3.0",min) nails at 6" o.c. Reinforcing member is a minimum 80% of web member length.

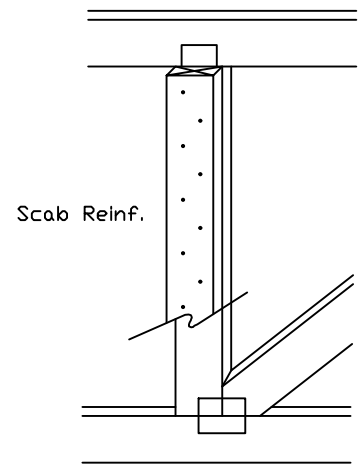

YOONHWAK KIM
LICENSE
No. 86367
STATE OF
FLORIDA
PROFESSIONAL ENGINEER

ALPINE
AN ITW COMPANY
514 Earth City Expressway
Suite 242
Earth City, MO 63045

WARNING READ AND FOLLOW ALL NOTES ON THIS DRAWING!
IMPORTANT FURNISH THIS DRAWING TO ALL CONTRACTORS INCLUDING THE INSTALLERS.

Trusses require extreme care in fabricating, handling, shipping, installing and bracing. Refer to and follow the latest edition of BCSI (Building Component Safety Information, by TPI and SBCA) for safety practices prior to performing these functions. Installers shall provide temporary bracing per BCSI. Unless noted otherwise, top chord shall have properly attached structural sheathing and bottom chord shall have a properly attached rigid ceiling. Locations shown for permanent lateral restraint of webs shall have bracing installed per BCSI sections B3, B7 or B10, as applicable. Apply plates to each face of truss and position as shown above and on the Joint Details, unless noted otherwise. Refer to drawings 160A-Z for standard plate positions.

Alpine, a division of ITW Building Components Group Inc. shall not be responsible for any deviation from this drawing, any failure to build the truss in conformance with ANSI/TPI 1, or for handling, shipping, installation & bracing of trusses.

A seal on this drawing or cover page listing this drawing, indicates acceptance of professional engineering responsibility solely for the design shown. The suitability and use of this drawing for any structure is the responsibility of the Building Designer per ANSI/TPI 1 Sec.2.

For more information see this job's general notes page and these web sites:
ALPINE: www.alpineitw.com; TPI: www.tpinst.org; SBCA: www.sbcindustry.org; ICC: www.iccsafe.org

TC LL	PSF	
TC DL	PSF	
BC DL	PSF	
BC LL	PSF	
TOT. LD.	PSF	
DUR. FAC.		
SPACING		

REF	CLR Subst.
DATE	01/02/19
DRWG	BRCLBSUB0119

Piggyback Detail - ASCE 7-16: 160 mph, 30' Mean Height, Enclosed, Exposure C, Kzt=1.00

160 mph Wind, 30.00 ft Mean Hgt, ASCE 7-16, Enclosed Bldg. located anywhere in roof, Exp C, Wind DL= 5.0 psf (min), Kzt=1.0.
Or 140 mph wind, 30.00 ft Mean Hgt, ASCE 7-16, Enclosed Bldg. located anywhere in roof, Exp D, wind DL= 5.0 psf (min), Kzt=1.0.

Note: Top chords of trusses supporting piggyback cap trusses must be adequately braced by sheathing or purlins. The building Engineer of Record shall provide diagonal bracing or any other suitable anchorage to permanently restrain purlins, and lateral bracing for out of plane loads over gable ends.

Maximum truss spacing is 24" o.c. detail is not applicable if cap supports additional loads such as cupola, steeple, chimney or drag strut loads.

** Refer to Engineer's sealed truss design drawing for piggyback and base truss specifications.

Detail A : Purlin Spacing = 24" o.c. or less

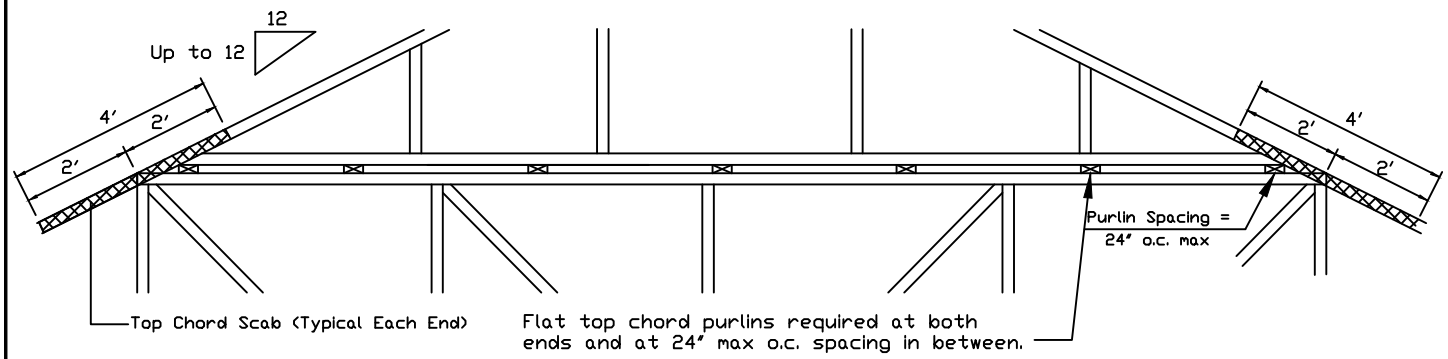

Piggyback cap truss slant nailed to all top chord purlin bracing with (2) 16d box nails (0.135"x3.5") and secure top chord with 2x4 #3 grade scab (1 side only at each end) attached with 2 rows of 10d box nails (0.128"x3") at 4" o.c.

Attach purlin bracing to the flat top chord using (2) 16d box nails (0.135"x3.5").

The top chord #3 grade 2x4 scab may be replaced with either of the following: (1) 3X8 Trulox plate attached with (8) 0.120"x1.375" nails, (4) into cap TC & (4) into base truss TC or (1) 28PB wave piggyback plate plated to the piggyback truss TC and attached to the base truss TC with (4) 0.120"x1.375" nails. Note: Nailing thru holes of wave plate is acceptable.

Detail B : Purlin Spacing > 24" o.c.

Piggyback cap truss slant nailed to all top chord purlin bracing with (2) 16d box nails (0.135"x3.5") and secure top chord with 2x4 #3 grade scab (1 side only at each end) attached with 2 rows of 10d box nails (0.128"x3") at 4" o.c.

Attach purlin bracing to the flat top chord using a minimum of (2) 16d box nails (0.135"x3.5").

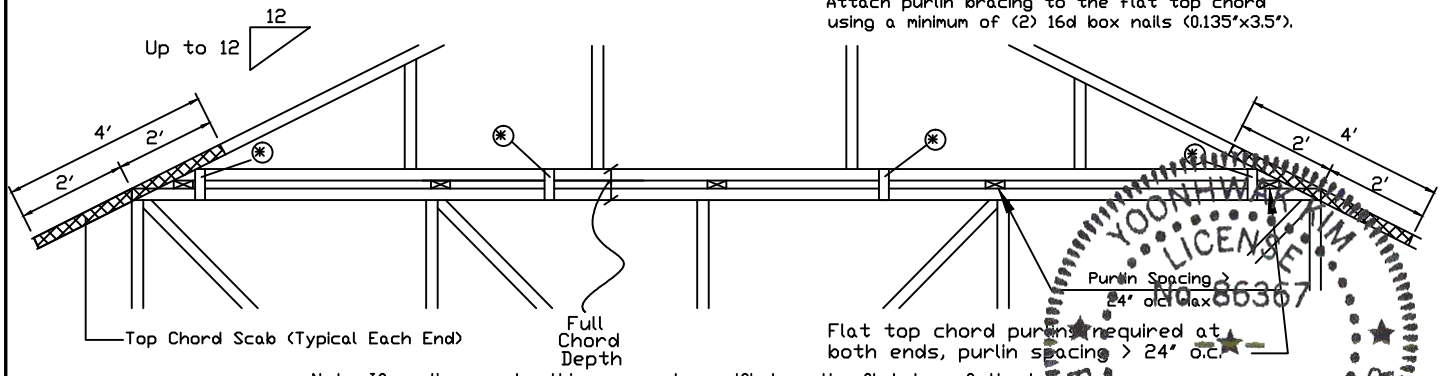

Note: If purlins or sheathing are not specified on the flat top of the base truss, purlins must be installed at 24" o.c. max. and use Detail A.

* In addition, provide connection with one of the following methods:

Trulox
Use 3X8 Trulox plates for 2x4 chord member, and 3X10 Trulox plates for 2x6 and larger chord members. Attach to each face @ 8' o.c. with (4) 0.120"x1.375" nails into cap bottom chord and (4) in base truss top chord. Trulox plates may be staggered 4' o.c. front to back faces.

APA Rated Gusset
8"x8"x7/16" (min) APA rated sheathing gussets (each face). Attach @ 8' o.c. with (8) 6d common (0.113"x2") nails per gusset, (4) in cap bottom chord and (4) in base truss top chord. Gussets may be staggered 4' o.c. front to back faces.

2x4 Vertical Scabs
2x4 SPF #2, full chord depth scabs (each face). Attach @ 8' o.c. with (6) 10d box nails (0.128"x3") per scab, (3) in cap bottom chord and (3) in base truss top chord. Scabs may be staggered 4' o.c. front to back faces.

28PB Wave Piggyback Plate
One 28PB wave piggyback plate to each face @ 8' o.c. Attach teeth to piggyback at time of fabrication. Attach to supporting truss with (4) 0.120"x1.375" nails per face per ply. Piggyback plates may be staggered 4' o.c. front to back faces.

YOONHWAK KIM
LICENSE
No 86367
STATE OF
FLORIDA
PROFESSIONAL ENGINEER

ALPINE™
AN ITW COMPANY

13723 Riverport Drive
Suite 200
Maryland Heights, MO 63043

****WARNING** READ AND FOLLOW ALL NOTES ON THIS DRAWING!**
****IMPORTANT** FURNISH THIS DRAWING TO ALL CONTRACTORS INCLUDING THE INSTALLERS.**

Trusses require extreme care in fabricating, handling, shipping, installing and bracing. Refer to and follow the latest edition of BCSI (Building Component Safety Information, by TPI and SBCA) for safety practices prior to performing these functions. Installers shall provide temporary bracing per BCSI. Unless noted otherwise, top chord shall have properly attached structural sheathing and bottom chord shall have a properly attached rigid ceiling. Locations shown for permanent lateral restraint of webs shall have bracing installed per BCSI sections B3, B7 or B10, as applicable. Apply plates to each face of truss and position as shown above and on the Joint Details, unless noted otherwise. Refer to drawings 160A-Z for standard plate positions.

Alpine, a division of ITW Building Components Group Inc. shall not be responsible for any deviation from this drawing, any failure to build the truss in conformance with ANSI/TPI 1, or for handling, shipping, installation & bracing of trusses.

A seal on this drawing or cover page listing this drawing, indicates acceptance of professional engineering responsibility solely for the design shown. The suitability and use of this drawing for any structure is the responsibility of the Building Designer per ANSI/TPI 1 Sec.2.

For more information see this job's general notes page and these web sites: ALPINE: www.alpineitw.com; TPI: www.tpinst.org; SBCA: www.sbcindustry.org; ICC: www.iccsafe.org

REF	PIGGYBACK
DATE	01/02/2018
DRWG	PB160160118
SPACING	24.0"

Gable Stud Reinforcement Detail

ASCE 7-16: 140 mph Wind Speed, 30' Mean Height, Enclosed, Exposure C, Kzt = 1.00

Or: 120 mph Wind Speed, 30' Mean Height, Partially Enclosed, Exposure C, Kzt = 1.00
Or: 120 mph Wind Speed, 30' Mean Height, Enclosed, Exposure D, Kzt = 1.00
Or: 100 mph wind speed, 30' Mean Height, Partially Enclosed, Exposure D, Kzt = 1.00

Max Gable Vertical Length	2x4 Gable Vertical Spacing	Species	Brace Grade	No Braces	(1) 1x4 'L' Brace * Group A	(1) 1x4 'L' Brace * Group B	(1) 2x4 'L' Brace * Group A	(1) 2x4 'L' Brace * Group B	(2) 2x4 'L' Brace ** Group A	(2) 2x4 'L' Brace ** Group B	(1) 2x6 'L' Brace * Group A	(1) 2x6 'L' Brace * Group B	(2) 2x6 'L' Brace ** Group A	(2) 2x6 'L' Brace ** Group B
	24" o.c.	SPF HF	#1 / #2	4' 1"	6' 11"	7' 2"	8' 2"	8' 6"	9' 9"	10' 2"	12' 10"	13' 4"	14' 0"	14' 0"
			#3	3' 10"	6' 2"	6' 7"	8' 1"	8' 5"	9' 8"	10' 0"	12' 8"	13' 2"	14' 0"	14' 0"
			Stud	3' 10"	6' 2"	6' 6"	8' 1"	8' 5"	9' 8"	10' 0"	12' 8"	13' 2"	14' 0"	14' 0"
			Standard	3' 10"	5' 3"	5' 7"	7' 0"	7' 6"	9' 6"	10' 0"	11' 0"	11' 10"	14' 0"	14' 0"
		SP DFL	#1	4' 2"	7' 0"	7' 3"	8' 3"	8' 7"	9' 10"	10' 3"	13' 0"	13' 6"	14' 0"	14' 0"
			#2	4' 1"	6' 11"	7' 2"	8' 2"	8' 6"	9' 9"	10' 2"	12' 10"	13' 4"	14' 0"	14' 0"
			#3	4' 0"	5' 7"	5' 11"	7' 5"	7' 11"	9' 8"	10' 1"	11' 7"	12' 5"	14' 0"	14' 0"
			Stud	4' 0"	5' 7"	5' 11"	7' 5"	7' 11"	9' 8"	10' 1"	11' 7"	12' 5"	14' 0"	14' 0"
			Standard	3' 9"	4' 11"	5' 13"	6' 6"	7' 0"	8' 10"	9' 6"	10' 3"	11' 0"	13' 11"	14' 0"
	16" o.c.	SPF HF	#1 / #2	4' 8"	7' 11"	8' 3"	9' 4"	9' 9"	11' 2"	11' 7"	14' 0"	14' 0"	14' 0"	14' 0"
			#3	4' 5"	7' 6"	8' 3"	9' 3"	9' 7"	11' 0"	11' 6"	14' 0"	14' 0"	14' 0"	14' 0"
			Stud	4' 5"	7' 6"	8' 0"	9' 3"	9' 7"	11' 0"	11' 6"	14' 0"	14' 0"	14' 0"	14' 0"
			Standard	4' 5"	6' 5"	6' 10"	8' 7"	9' 2"	11' 0"	11' 6"	13' 6"	14' 0"	14' 0"	14' 0"
		SP DFL	#1	4' 10"	8' 0"	8' 4"	9' 6"	9' 10"	11' 3"	11' 9"	14' 0"	14' 0"	14' 0"	14' 0"
			#2	4' 8"	7' 11"	8' 3"	9' 4"	9' 9"	11' 2"	11' 7"	14' 0"	14' 0"	14' 0"	14' 0"
			#3	4' 7"	6' 10"	7' 3"	9' 1"	9' 8"	11' 1"	11' 6"	14' 0"	14' 0"	14' 0"	14' 0"
			Stud	4' 7"	6' 10"	7' 3"	9' 1"	9' 8"	11' 1"	11' 6"	14' 0"	14' 0"	14' 0"	14' 0"
			Standard	4' 5"	6' 0"	6' 5"	8' 0"	8' 7"	10' 10"	11' 6"	12' 7"	13' 15"	14' 0"	14' 0"
	12" o.c.	SPF HF	#1 / #2	5' 2"	8' 9"	9' 1"	10' 4"	10' 9"	11' 2"	12' 9"	14' 0"	14' 0"	14' 0"	14' 0"
			#3	4' 10"	8' 7"	8' 11"	10' 2"	10' 7"	12' 2"	12' 8"	14' 0"	14' 0"	14' 0"	14' 0"
			Stud	4' 10"	8' 7"	8' 11"	10' 2"	10' 7"	12' 2"	12' 8"	14' 0"	14' 0"	14' 0"	14' 0"
			Standard	4' 10"	7' 5"	7' 11"	9' 11"	10' 7"	12' 2"	12' 8"	14' 0"	14' 0"	14' 0"	14' 0"
		SP DFL	#1	5' 4"	8' 10"	9' 2"	10' 5"	10' 10"	12' 5"	12' 11"	14' 0"	14' 0"	14' 0"	14' 0"
			#2	5' 2"	8' 9"	9' 1"	10' 4"	10' 9"	12' 3"	12' 9"	14' 0"	14' 0"	14' 0"	14' 0"
			#3	5' 0"	7' 10"	8' 4"	10' 3"	10' 8"	12' 2"	12' 8"	14' 0"	14' 0"	14' 0"	14' 0"
			Stud	5' 0"	7' 10"	8' 4"	10' 3"	10' 8"	12' 2"	12' 8"	14' 0"	14' 0"	14' 0"	14' 0"
			Standard	4' 10"	6' 11"	7' 4"	9' 3"	9' 10"	12' 2"	12' 8"	14' 0"	14' 0"	14' 0"	14' 0"

Bracing Group Species and Grades:

Group A:

Spruce-Pine-Fir

#1 / #2	Standard
#3	Stud

Hem-Fir

#2	Stud
#3	Standard

Douglas Fir-Larch

#3
Stud
Standard

Southern Pine***

#3
Stud
Standard

Group B:

Hem-Fir

#1 & Btr
#1

Douglas Fir-Larch

#1
#2

Southern Pine***

#1
#2

1x4 Braces shall be SRB (Stress-Rated Board).

***For 1x4 So. Pine use only Industrial 55 or Industrial 45 Stress-Rated Boards. Group B values may be used with these grades.

Gable Truss Detail Notes:

Wind Load deflection criterion is L/240.

Provide uplift connections for 100 plf over continuous bearing (5 psf TC Dead Load).

Gable end supports load from 4' 0" outlookers with 2' 0" overhang, or 12" plywood overhang.

Attach 'L' braces with 10d (0.128"x3.0" min) nails.

* For (1) 'L' brace: space nails at 2" o.c. in 18" end zones and 4" o.c. between zones.

** For (2) 'L' braces: space nails at 3" o.c. in 18" end zones and 6" o.c. between zones.

'L' bracing must be a minimum of 80% of web member length.

Gable Vertical Plate Sizes

Vertical Length	No Splice
Less than 4' 0"	2X4
Greater than 4' 0", but less than 11' 6"	3X4
Greater than 11' 6"	4X4

+ Refer to common truss design for peak, splice, and heel plates.

Refer to the Building Designer for conditions not addressed by this detail.

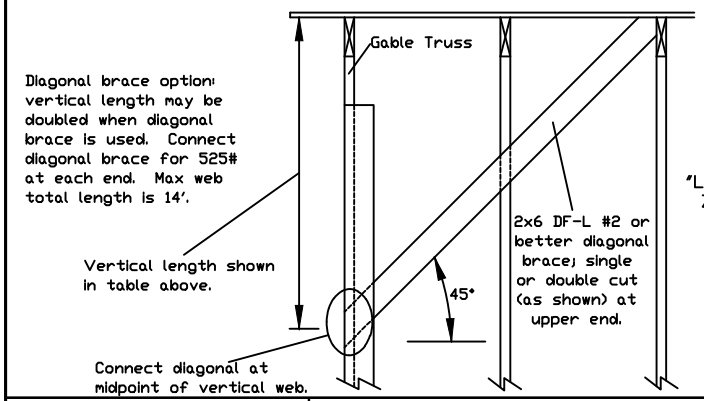

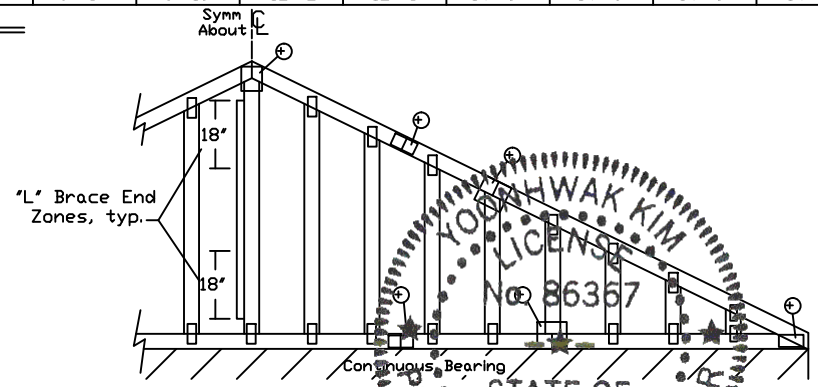

Refer to chart above for max gable vertical length.

YOONHWAK KIM LICENSE No 86367 STATE OF FLORIDA PROFESSIONAL ENGINEER

WARNING READ AND FOLLOW ALL NOTES ON THIS DRAWING!
IMPORTANT FURNISH THIS DRAWING TO ALL CONTRACTORS INCLUDING THE INSTALLERS.

Trusses require extreme care in fabricating, handling, shipping, installing and bracing. Refer to and follow the latest edition of BCSI (Building Component Safety Information, by TPI and SBCA) for safety practices prior to performing these functions. Installers shall provide temporary bracing per BCSI. Unless noted otherwise, top chord shall have properly attached structural sheathing and bottom chord shall have a properly attached rigid ceiling. Locations shown for permanent lateral restraint of webs shall have bracing installed per BCSI sections B3, B7 or B10, as applicable. Apply plates to each face of truss and position as shown above and on the Joint Details, unless noted otherwise. Refer to drawings 160A-Z for standard plate positions.

Alpine, a division of ITW Building Components Group Inc. shall not be responsible for any deviation from this drawing, any failure to build the truss in conformance with ANSI/TPI 1, or for handling, shipping, installation & bracing of trusses.

A seal on this drawing or cover page listing this drawing, indicates acceptance of professional engineering responsibility solely for the design shown. The suitability and use of this drawing for any structure is the responsibility of the Building Designer per ANSI/TPI 1 Sec.2.

For more information see this job's general notes page and these web sites: ALPINE: www.alpineitw.com; TPI: www.tpinst.org; SBCA: www.sbcindustry.org; ICC: www.icc-safe.org

ALPINE AN ITW COMPANY
514 Earth City Expressway
Suite 242
Earth City, MO 63045

MAX. TOT. LD. 60 PSF

MAX. SPACING 24.0"

REF	ASCE7-16-GAB14030
DATE	01/26/2018
DRWG	A14030ENC160118

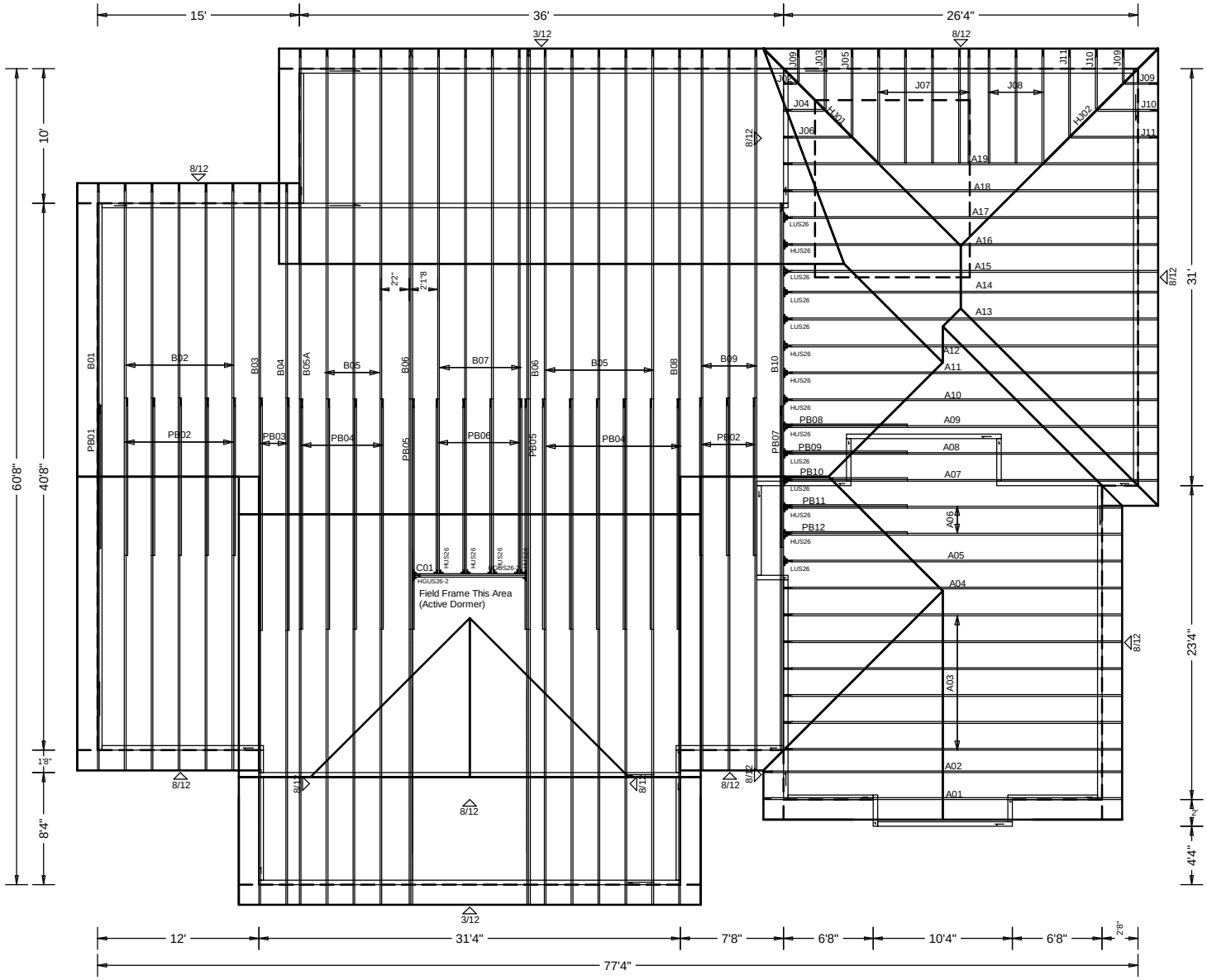

W.B. Howland Truss Co.
610 11th St. SW
Live Oak, FL 32064
(386) 362-1235
(386) 362-7124 (Fax)
howlandtruss@gmail.com

ROOF PITCH: 3, 8/12
OVERHANG: 18"
CEILING: 10'
EXT. WALLS: 4"
LOADING: 40psf
WIND LOAD: 130mph
EXPOSURE: C

DATE: 6/25/21

Truss to Truss Connectors:
(11) HUS26
(7) LUS26
(2) HGUS26-2

JOB #: 21-5719

Job Name: Jones/Freeman
Customer: JOSH SPARKS CONSTRUCTION
Designer: Kelly Caudill
ADDRESS: 587 Pinehurst Dr
SALESMAN: SB
: <Not Found>

JOB NO:
21-5719

PAGE NO:
1 OF 1