DATE 12/22/2005

Columbia County Building Permit

This Permit Expires One Year From the Date of Issue

PERMIT
000023983

APPLICANT MATT CASON PHONE 752-5152

ADDRESS 853 SW SISTERS WELCOME ROAD LAKE CITY FL 32055

OWNER STANLEY CRAWFORD PHONE 752-5152

ADDRESS 334 SW PHILLIPS CIRCLE LAKE CITY FL 32055

CONTRACTOR STANLEY CRAWFORD PHONE 752-5152

LOCATION OF PROPERTY 90W, TL ON 252B, TR ON PHILLIPS CIRCLE, PAST CURVE TO 1ST ON LEFT

TYPE DEVELOPMENT SFD,UTILITY ESTIMATED COST OF CONSTRUCTION 104150.00

HEATED FLOOR AREA 2083.00 TOTAL AREA 3068.00 HEIGHT ____ STORIES 1

FOUNDATION CONC WALLS FRAMED ROOF PITCH 7/12 FLOOR SLAB

LAND USE & ZONING RSF-2 MAX. HEIGHT 20

Minimum Set Back Requirments: STREET-FRONT 25.00 REAR 15.00 SIDE 10.00

NO. EX.D.U. 0 FLOOD ZONE X PP DEVELOPMENT PERMIT NO. ____

PARCEL ID 03-4S-16-02739-248 SUBDIVISION TURKEY RUN

LOT 48 BLOCK ____ PHASE ____ UNIT ____ TOTAL ACRES 0.64

000000926		RG0042896		
Culvert Permit No.	Culvert Waiver	Contractor's License Number	Applicant/Owner/Contractor	
CULVERT	05-1220-N	BK	JH	Y
Driveway Connection	Septic Tank Number	LU & Zoning checked by	Approved for Issuance	New Resident

COMMENTS: ONE FOOT ABOVE THE ROAD, NOC ON FILE

ALTERNATIVE TERMIT TREATMENT RECEIVED

Check # or Cash 7644

FOR BUILDING & ZONING DEPARTMENT ONLY

(footer/Slab)

Temporary Power ____ date/app. by Foundation ____ date/app. by Monolithic ____ date/app. by

Under slab rough-in plumbing ____ date/app. by Slab ____ date/app. by Sheathing/Nailing ____ date/app. by

Framing ____ date/app. by Rough-in plumbing above slab and below wood floor ____ date/app. by

Electrical rough-in ____ date/app. by Heat & Air Duct ____ date/app. by Peri. beam (Lintel) ____ date/app. by

Permanent power ____ date/app. by C.O. Final ____ date/app. by Culvert ____ date/app. by

M/H tie downs, blocking, electricity and plumbing ____ date/app. by Pool ____ date/app. by

Reconnection ____ date/app. by Pump pole ____ date/app. by Utility Pole ____ date/app. by

M/H Pole ____ date/app. by Travel Trailer ____ date/app. by Re-roof ____ date/app. by

BUILDING PERMIT FEE $ 525.00 CERTIFICATION FEE $ 15.34 SURCHARGE FEE $ 15.34

MISC. FEES $ 0.00 ZONING CERT. FEE $ 50.00 FIRE FEE $ 0.00 WASTE FEE $ ____

FLOOD DEVELOPMENT FEE $ ____ FLOOD ZONE FEE $ 25.00 CULVERT FEE $ 25.00 **TOTAL FEE** 655.68

INSPECTORS OFFICE ____ CLERKS OFFICE CH

NOTICE: IN ADDITION TO THE REQUIREMENTS OF THIS PERMIT, THERE MAY BE ADDITIONAL RESTRICTIONS APPLICABLE TO THIS PROPERTY THAT MAY BE FOUND IN THE PUBLIC RECORDS OF THIS COUNTY. AND THERE MAY BE ADDITIONAL PERMITS REQUIRED FROM OTHER GOVERNMENTAL ENTITIES SUCH AS WATER MANAGEMENT DISTRICTS, STATE AGENCIES, OR FEDERAL AGENCIES.

"WARNING TO OWNER: YOUR FAILURE TO RECORD A NOTICE OF COMMENCEMENT MAY RESULT IN YOUR PAYING TWICE FOR IMPROVEMENTS TO YOUR PROPERTY. IF YOU INTEND TO OBTAIN FINANCING, CONSULT WITH YOUR LENDER OR AN ATTORNEY BEFORE RECORDING YOUR NOTICE OF COMMENCEMENT."

This Permit Must Be Prominently Posted on Premises During Construction

PLEASE NOTIFY THE COLUMBIA COUNTY BUILDING DEPARTMENT AT LEAST 24 HOURS IN ADVANCE OF EACH INSPECTION, IN ORDER THAT IT MAY BE MADE WITHOUT DELAY OR INCONVIENCE, PHONE 758-1008. THIS PERMIT IS NOT VALID UNLESS THE WORK AUTHORIZED BY IT IS COMMENCED WITHIN 6 MONTHS AFTER ISSUANCE.

The Issuance of this Permit Does Not Waive Compliance by Permittee with Deed Restrictions.

Columbia County Building Department
Culvert Permit

Culvert Permit No.
000000926

DATE 12/22/2005 PARCEL ID # 03-4S-16-02739-248

APPLICANT MATT CASON PHONE 752-5152

ADDRESS 85 SW SISTERS WELCOME ROAD LAKE CITY FL 32055

OWNER STANLEY CRAWFORD PHONE 752-5152

ADDRESS 334 SW PHILLIPS CIRCLE LAKE CITY FL 32055

CONTRACTOR STANLEY CRAWFORD PHONE 752-5152

LOCATION OF PROPERTY 90W, TL ON 252B, TR ON PHILLIPS CIRCLE, PAST CURVE TO 1ST ON LEFT

SUBDIVISION/LOT/BLOCK/PHASE/UNIT TURKEY RUN 48

SIGNATURE

INSTALLATION REQUIREMENTS

[X] Culvert size will be 18 inches in diameter with a total lenght of 32 feet, leaving 24 feet of driving surface. Both ends will be mitered 4 foot with a 4 : 1 slope and poured with a 4 inch thick reinforced concrete slab.

INSTALLATION NOTE: Turnouts will be required as follows:
a) a majority of the current and existing driveway turnouts are paved, or;
b) the driveway to be served will be paved or formed with concrete.
Turnouts shall be concrete or paved a minimum of 12 feet wide or the width of the concrete or paved driveway, whichever is greater. The width shall conform to the current and existing paved or concreted turnouts.

[ ] Culvert installation shall conform to the approved site plan standards.

[ ] Department of Transportation Permit installation approved standards.

[ ] Other

ALL PROPER SAFETY REQUIREMENTS SHOULD BE FOLLOWED DURING THE INSTALATION OF THE CULVERT.

135 NE Hernando Ave., Suite B-21
Lake City, FL 32055
Phone: 386-758-1008 Fax: 386-758-2160

Amount Paid 25.00

COLUMBIA COUNTY GATEWAY TO FLORIDA

Columbia County Building Permit Application

CK# 7644

Revised 9-23-04

For Office Use Only Application # 0512-28 Date Received 12/12/05 By G Permit # 23983/ 926

Application Approved by - Zoning Official BLK Date 12.12.05 Plans Examiner OKTH Date 12-22-05

Flood Zone X Per PLAT Development Permit N/A Zoning RSF-2 Land Use Plan Map Category RES. LOW DEN.

Comments

Applicants Name Matt Cason Phone 752-5152 FAX 755-2165

Address 853 SW Sisters Welcome Rd

Owners Name Stanley Crawford Const. Phone 752-5152

911 Address 334 SW Phillips Circle

Contractors Name Stanley Crawford Const. Phone 752-5152

Address 853 SW Sisters Welcome Rd

Fee Simple Owner Name & Address

Bonding Co. Name & Address

Architect/Engineer Name & Address

Mortgage Lenders Name & Address

Circle the correct power company - FL Power & Light - Clay Elec. - Suwannee Valley Elec. - Progressive Energy

Property ID Number 03 4S 16 02739 248 Estimated Cost of Construction 102,000.00

Subdivision Name Turkey Run Lot 48 Block ___ Unit ___ Phase ___

Driving Directions Hwy 90 W. TL on 252B, TR on Philips Circle, past curve House on left, (1st on left)

Type of Construction Single Fam / Res. Number of Existing Dwellings on Property Ø

Total Acreage .64 Lot Size ___ Do you need a Culvert Permit or Culvert Waiver or Have an Existing Drive

Actual Distance of Structure from Property Lines - Front 43 Side 35 Side 31 Rear 100+

Total Building Height 20'7" Number of Stories 1 Heated Floor Area 2083 Roof Pitch 7/12

Porch 452 GARAGE 532 TOTAL 3068

Application is hereby made to obtain a permit to do work and installations as indicated. I certify that no work or installation has commenced prior to the issuance of a permit and that all work be performed to meet the standards of all laws regulating construction in this jurisdiction.

OWNERS AFFIDAVIT: I hereby certify that all the foregoing information is accurate and all work will be done in compliance with all applicable laws and regulating construction and zoning.

WARNING TO OWNER: YOUR FAILURE TO RECORD A NOTICE OF COMMENCMENT MAY RESULT IN YOU PAYING TWICE FOR IMPROVEMENTS TO YOUR PROPERTY. IF YOU INTEND TO OBTAIN FINANCING, CONSULT WITH YOUR LENDER OR ATTORNEY BEFORE RECORDING YOUR NOTICE OF COMMENCEMENT.

Stanley Crawford

Owner Builder or Agent (Including Contractor)

JANET L. CHEEK
MY COMMISSION # DD 226496
EXPIRES June 25, 2007
Bonded Thru Notary Public Underwriters

STATE OF FLORIDA
COUNTY OF COLUMBIA

Sworn to (or affirmed) and subscribed before me this 6th day of December 2005.

Personally known ✓ or Produced Identification ___

Stanley Crawford

Contractor Signature

Contractors License Number RG-0042896

Competency Card Number 5627

NOTARY STAMP/SEAL

Janet L. Cheek

Notary Signature

FORM 600A-2004 EnergyGauge® 4.0

FLORIDA ENERGY EFFICIENCY CODE FOR BUILDING CONSTRUCTION

Florida Department of Community Affairs

Residential Whole Building Performance Method A

Project Name:	TR 48	Builder:	STAN CRAWFORD
Address:		Permitting Office:	Columbia
City, State:	,	Permit Number:	23983
Owner:	TR 48	Jurisdiction Number:	221000
Climate Zone:	North		

1. New construction or existing	New	__
2. Single family or multi-family	Single family	__
3. Number of units, if multi-family	1	__
4. Number of Bedrooms	3	__
5. Is this a worst case?	Yes	__
6. Conditioned floor area (ft²)	2083 ft²	__
7. Glass type[1] and area: (Label reqd. by 13-104.4.5 if not default)		
a. U-factor: (or Single or Double DEFAULT)	Description Area 7a. (Dble Default) 335.0 ft²	__
b. SHGC: (or Clear or Tint DEFAULT)	7b. (Clear) 335.0 ft²	__
8. Floor types		
a. Slab-On-Grade Edge Insulation	R=4.0, 217.0(p) ft	__
b. N/A		__
c. N/A		__
9. Wall types		
a. Frame, Wood, Exterior	R=13.0, 1165.0 ft²	__
b. Frame, Wood, Adjacent	R=13.0, 182.0 ft²	__
c. N/A		__
d. N/A		__
e. N/A		__
10. Ceiling types		__
a. Under Attic	R=30.0, 2083.0 ft²	
b. N/A		__
c. N/A		__
11. Ducts		__
a. Sup: Unc. Ret: Unc. AH: Interior	Sup. R=6.0, 226.0 ft	
b. N/A		__
		__

12. Cooling systems		
a. Central Unit	Cap: 42.0 kBtu/hr	__
	SEER: 13.00	__
b. N/A		__
		__
c. N/A		__
		__
13. Heating systems		
a. Electric Heat Pump	Cap: 41.0 kBtu/hr	__
	HSPF: 7.00	__
b. N/A		__
		__
c. N/A		__
		__
14. Hot water systems		
a. Electric Resistance	Cap: 50.0 gallons	__
	EF: 0.92	__
b. N/A		__
		__
c. Conservation credits (HR-Heat recovery, Solar DHP-Dedicated heat pump)		__
15. HVAC credits (CF-Ceiling fan, CV-Cross ventilation, HF-Whole house fan, PT-Programmable Thermostat, MZ-C-Multizone cooling, MZ-H-Multizone heating)		__

Glass/Floor Area: 0.16 | Total as-built points: 26247 | Total base points: 28946 | **PASS**

I hereby certify that the plans and specifications covered by this calculation are in compliance with the Florida Energy Code.

PREPARED BY: SUNCOAST INSULATION

DATE: 11/25/5

I hereby certify that this building, as designed, is in compliance with the Florida Energy Code.

OWNER/AGENT: _____

DATE: _____

Review of the plans and specifications covered by this calculation indicates compliance with the Florida Energy Code. Before construction is completed this building will be inspected for compliance with Section 553.908 Florida Statutes.

GREAT SEAL OF THE STATE OF FLORIDA — IN GOD WE TRUST

BUILDING OFFICIAL: _____

DATE: _____

1 Predominant glass type. For actual glass type and areas, see Summer & Winter Glass output on pages 2&4.

FORM 600A-2004 EnergyGauge® 4.0

SUMMER CALCULATIONS

Residential Whole Building Performance Method A - Details

ADDRESS: , , , PERMIT #:

BASE				AS-BUILT							
GLASS TYPES .18 X Conditioned Floor Area	X BSPM	= Points		Type/SC	Overhang Ornt	Len	Hgt	Area X	SPM X	SOF	= Points
.18	2083.0	20.04	7513.8	Double, Clear	E	2.0	6.0	98.0	42.06	0.85	3495.8
				Double, Clear	N	2.0	6.0	45.0	19.20	0.90	777.7
				Double, Clear	S	2.0	6.0	35.0	35.87	0.78	974.2
				Double, Clear	W	2.0	6.0	157.0	38.52	0.85	5137.4
				As-Built Total:				**335.0**			**10385.0**
WALL TYPES	Area X	BSPM =	Points	Type		R-Value		Area X	SPM =		Points
Adjacent	182.0	0.70	127.4	Frame, Wood, Exterior		13.0		1165.0	1.50		1747.5
Exterior	1165.0	1.70	1980.5	Frame, Wood, Adjacent		13.0		182.0	0.60		109.2
Base Total:	**1347.0**		**2107.9**	**As-Built Total:**				**1347.0**			**1856.7**
DOOR TYPES	Area X	BSPM =	Points	Type				Area X	SPM =		Points
Adjacent	18.0	2.40	43.2	Exterior Insulated				36.0	4.10		147.6
Exterior	36.0	6.10	219.6	Adjacent Insulated				18.0	1.60		28.8
Base Total:	**54.0**		**262.8**	**As-Built Total:**				**54.0**			**176.4**
CEILING TYPES	Area X	BSPM =	Points	Type		R-Value		Area X	SPM X SCM =		Points
Under Attic	2083.0	1.73	3603.6	Under Attic		30.0		2083.0	1.73 X 1.00		3603.6
Base Total:	**2083.0**		**3603.6**	**As-Built Total:**				**2083.0**			**3603.6**
FLOOR TYPES	Area X	BSPM =	Points	Type		R-Value		Area X	SPM =		Points
Slab	217.0(p)	-37.0	-8029.0	Slab-On-Grade Edge Insulation		4.0		217.0(p	-36.70		-7963.9
Raised	0.0	0.00	0.0								
Base Total:			**-8029.0**	**As-Built Total:**				**217.0**			**-7963.9**
INFILTRATION	Area X	BSPM =	Points					Area X	SPM =		Points
	2083.0	10.21	21267.4					2083.0	10.21		21267.4

FORM 600A-2004 EnergyGauge® 4.0

WATER HEATING & CODE COMPLIANCE STATUS

Residential Whole Building Performance Method A - Details

ADDRESS: , , , PERMIT #:

BASE					AS-BUILT							
WATER HEATING												
Number of Bedrooms	X	Multiplier	=	Total	Tank Volume	EF	Number of Bedrooms	X	Tank Ratio	X Multiplier	X Credit Multiplier	= Total
3		2635.00		7905.0	50.0	0.92	3		1.00	2635.00	1.00	7905.0
					As-Built Total:							***7905.0***

CODE COMPLIANCE STATUS									
BASE					AS-BUILT				
Cooling Points	+	Heating Points	+	Hot Water Points	=	Total Points	Cooling Points	+	Heating Points	+	Hot Water Points	=	Total Points
11402		**9640**		**7905**		**28946**	**8759**		**9583**		**7905**		**26247**

PASS

FORM 600A-2004 EnergyGauge® 4.0

WINTER CALCULATIONS

Residential Whole Building Performance Method A - Details

ADDRESS: , , ,	PERMIT #:

BASE				AS-BUILT							
Winter Base Points:			**15364.7**	**Winter As-Built Points:**							**16926.3**
Total Winter Points	X	System Multiplier	= Heating Points	Total Component (System - Points)	X	Cap Ratio	X Duct Multiplier (DM x DSM x AHU)	X System Multiplier	X Credit Multiplier	=	Heating Points
				(sys 1: Electric Heat Pump 41000 btuh ,EFF(7.0) Ducts:Unc(S),Unc(R),Int(AH),R6.0							
				16926.3		1.000	(1.069 x 1.169 x 0.93)	0.487	1.000		9582.8
15364.7		**0.6274**	**9639.8**	**16926.3**		**1.00**	**1.162**	**0.487**	**1.000**		**9582.8**

FORM 600A-2004 EnergyGauge® 4.0

WINTER CALCULATIONS

Residential Whole Building Performance Method A - Details

ADDRESS: , , , PERMIT #:

BASE

GLASS TYPES .18 X Conditioned Floor Area		X BWPM	= Points
.18	2083.0	12.74	4776.7

WALL TYPES	Area	X BWPM	= Points
Adjacent	182.0	3.60	655.2
Exterior	1165.0	3.70	4310.5
Base Total:	**1347.0**		**4965.7**

DOOR TYPES	Area	X BWPM	= Points
Adjacent	18.0	11.50	207.0
Exterior	36.0	12.30	442.8
Base Total:	**54.0**		**649.8**

CEILING TYPES	Area	X BWPM	= Points
Under Attic	2083.0	2.05	4270.1
Base Total:	**2083.0**		**4270.1**

FLOOR TYPES	Area	X BWPM	= Points
Slab	217.0(p)	8.9	1931.3
Raised	0.0	0.00	0.0
Base Total:			**1931.3**

INFILTRATION	Area	X BWPM	= Points
	2083.0	-0.59	-1229.0

AS-BUILT

Type/SC	Overhang Ornt	Len	Hgt	Area	X WPM	X WOF	= Points
Double, Clear	E	2.0	6.0	98.0	18.79	1.06	1953.2
Double, Clear	N	2.0	6.0	45.0	24.58	1.00	1111.2
Double, Clear	S	2.0	6.0	35.0	13.30	1.26	585.7
Double, Clear	W	2.0	6.0	157.0	20.73	1.04	3393.4
As-Built Total:				**335.0**			**7043.5**

Type	R-Value	Area	X WPM	= Points
Frame, Wood, Exterior	13.0	1165.0	3.40	3961.0
Frame, Wood, Adjacent	13.0	182.0	3.30	600.6
As-Built Total:		**1347.0**		**4561.6**

Type	Area	X WPM	= Points
Exterior Insulated	36.0	8.40	302.4
Adjacent Insulated	18.0	8.00	144.0
As-Built Total:	**54.0**		**446.4**

Type	R-Value	Area	X WPM X WCM	= Points
Under Attic	30.0	2083.0	2.05 X 1.00	4270.1
As-Built Total:		**2083.0**		**4270.1**

Type	R-Value	Area	X WPM	= Points
Slab-On-Grade Edge Insulation	4.0	217.0(p	8.45	1833.6
As-Built Total:		**217.0**		**1833.6**

Area	X WPM	= Points
2083.0	-0.59	-1229.0

FORM 600A-2004 EnergyGauge® 4.0

SUMMER CALCULATIONS

Residential Whole Building Performance Method A - Details

ADDRESS: , , ,	PERMIT #:

BASE				AS-BUILT							
Summer Base Points: 26726.5				**Summer As-Built Points:**							**29325.2**
Total Summer Points	X	System Multiplier	=	Cooling Points	Total Component (System - Points)	X	Cap Ratio	X	Duct Multiplier (DM x DSM x AHU)	X	System Multiplier	X	Credit Multiplier	=	Cooling Points
					(sys 1: Central Unit 42000 btuh ,SEER/EFF(13.0) Ducts:Unc(S),Unc(R),Int(AH),R6.0(INS)										
					29325		1.00		(1.09 x 1.147 x 0.91)		0.263		1.000		8759.2
26726.5		**0.4266**		**11401.5**	**29325.2**		**1.00**		**1.138**		**0.263**		**1.000**		**8759.2**

Code Compliance Checklist

Residential Whole Building Performance Method A - Details

ADDRESS: , , ,	PERMIT #:

6A-21 INFILTRATION REDUCTION COMPLIANCE CHECKLIST

COMPONENTS	SECTION	REQUIREMENTS FOR EACH PRACTICE	CHECK
Exterior Windows & Doors	606.1.ABC.1.1	Maximum:.3 cfm/sq.ft. window area; .5 cfm/sq.ft. door area.	
Exterior & Adjacent Walls	606.1.ABC.1.2.1	Caulk, gasket, weatherstrip or seal between: windows/doors & frames, surrounding wall; foundation & wall sole or sill plate; joints between exterior wall panels at corners; utility penetrations; between wall panels & top/bottom plates; between walls and floor. EXCEPTION: Frame walls where a continuous infiltration barrier is installed that extends from, and is sealed to, the foundation to the top plate.	
Floors	606.1.ABC.1.2.2	Penetrations/openings >1/8" sealed unless backed by truss or joint members. EXCEPTION: Frame floors where a continuous infiltration barrier is installed that is sealed to the perimeter, penetrations and seams.	
Ceilings	606.1.ABC.1.2.3	Between walls & ceilings; penetrations of ceiling plane of top floor; around shafts, chases, soffits, chimneys, cabinets sealed to continuous air barrier; gaps in gyp board & top plate; attic access. EXCEPTION: Frame ceilings where a continuous infiltration barrier is installed that is sealed at the perimeter, at penetrations and seams.	
Recessed Lighting Fixtures	606.1.ABC.1.2.4	Type IC rated with no penetrations, sealed; or Type IC or non-IC rated, installed inside a sealed box with 1/2" clearance & 3" from insulation; or Type IC rated with < 2.0 cfm from conditioned space, tested.	
Multi-story Houses	606.1.ABC.1.2.5	Air barrier on perimeter of floor cavity between floors.	
Additional Infiltration reqts	606.1.ABC.1.3	Exhaust fans vented to outdoors, dampers; combustion space heaters comply with NFPA, have combustion air.	

6A-22 OTHER PRESCRIPTIVE MEASURES (must be met or exceeded by all residences.)

COMPONENTS	SECTION	REQUIREMENTS	CHECK
Water Heaters	612.1	Comply with efficiency requirements in Table 612.1.ABC.3.2. Switch or clearly marked circuit breaker (electric) or cutoff (gas) must be provided. External or built-in heat trap required.	
Swimming Pools & Spas	612.1	Spas & heated pools must have covers (except solar heated). Non-commercial pools must have a pump timer. Gas spa & pool heaters must have a minimum thermal efficiency of 78%.	
Shower heads	612.1	Water flow must be restricted to no more than 2.5 gallons per minute at 80 PSIG.	
Air Distribution Systems	610.1	All ducts, fittings, mechanical equipment and plenum chambers shall be mechanically attached, sealed, insulated, and installed in accordance with the criteria of Section 610. Ducts in unconditioned attics: R-6 min. insulation.	
HVAC Controls	607.1	Separate readily accessible manual or automatic thermostat for each system.	
Insulation	604.1, 602.1	Ceilings-Min. R-19. Common walls-Frame R-11 or CBS R-3 both sides. Common ceiling & floors R-11.	

ENERGY PERFORMANCE LEVEL (EPL) DISPLAY CARD

ESTIMATED ENERGY PERFORMANCE SCORE* = 84.8

The higher the score, the more efficient the home.

TR 48, , , ,

1.	New construction or existing	New	
2.	Single family or multi-family	Single family	
3.	Number of units, if multi-family	1	
4.	Number of Bedrooms	3	
5.	Is this a worst case?	Yes	
6.	Conditioned floor area (ft²)	2083 ft²	
7.	Glass type[1] and area: (Label reqd. by 13-104.4.5 if not default)		
	a. U-factor: (or Single or Double DEFAULT) 7a.	Description Area (Dble Default) 335.0 ft²	
	b. SHGC: (or Clear or Tint DEFAULT) 7b.	(Clear) 335.0 ft²	
8.	Floor types		
	a. Slab-On-Grade Edge Insulation	R=4.0, 217.0(p) ft	
	b. N/A		
	c. N/A		
9.	Wall types		
	a. Frame, Wood, Exterior	R=13.0, 1165.0 ft²	
	b. Frame, Wood, Adjacent	R=13.0, 182.0 ft²	
	c. N/A		
	d. N/A		
	e. N/A		
10.	Ceiling types		
	a. Under Attic	R=30.0, 2083.0 ft²	
	b. N/A		
	c. N/A		
11.	Ducts		
	a. Sup: Unc. Ret: Unc. AH: Interior	Sup. R=6.0, 226.0 ft	
	b. N/A		
12.	Cooling systems		
	a. Central Unit	Cap: 42.0 kBtu/hr	
		SEER: 13.00	
	b. N/A		
	c. N/A		
13.	Heating systems		
	a. Electric Heat Pump	Cap: 41.0 kBtu/hr	
		HSPF: 7.00	
	b. N/A		
	c. N/A		
14.	Hot water systems		
	a. Electric Resistance	Cap: 50.0 gallons	
		EF: 0.92	
	b. N/A		
	c. Conservation credits (HR-Heat recovery, Solar DHP-Dedicated heat pump)		
15.	HVAC credits (CF-Ceiling fan, CV-Cross ventilation, HF-Whole house fan, PT-Programmable Thermostat, MZ-C-Multizone cooling, MZ-H-Multizone heating)		

I certify that this home has complied with the Florida Energy Efficiency Code For Building Construction through the above energy saving features which will be installed (or exceeded) in this home before final inspection. Otherwise, a new EPL Display Card will be completed based on installed Code compliant features.

Builder Signature: _____ Date: _____

Address of New Home: _____ City/FL Zip: _____

**NOTE: The home's estimated energy performance score is only available through the FLA/RES computer program. This is not a Building Energy Rating. If your score is 80 or greater (or 86 for a US EPA/DOE EnergyStar™ designation), your home may qualify for energy efficiency mortgage (EEM) incentives if you obtain a Florida Energy Gauge Rating. Contact the Energy Gauge Hotline at 321/638-1492 or see the Energy Gauge web site at www.fsec.ucf.edu for information and a list of certified Raters. For information about Florida's Energy Efficiency Code For Building Construction, contact the Department of Community Affairs at 850/487-1824.*

1 Predominant glass type. For actual glass type and areas, see Summer & Winter Glass output on pages 2&4.

EnergyGauge® (Version: FLRCSB v4.0)

Application for Onsite Sewage Disposal System Construction Permit. Part II Site Plan

Permit Application Number: 05-1220N

ALL CHANGES MUST BE APPROVED BY THE COUNTY HEALTH UNIT

CRAWFORD/CR 05-3248

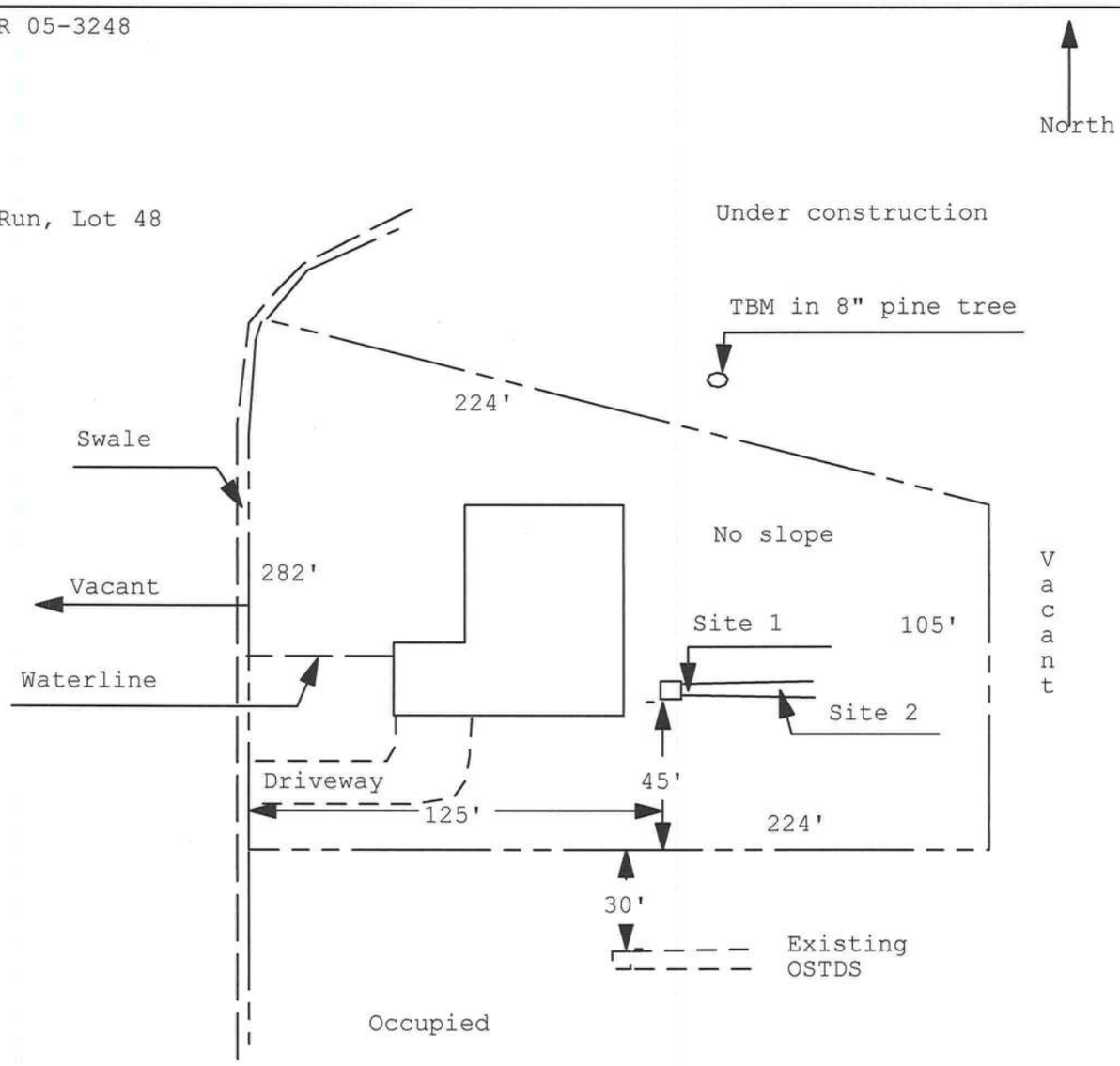

1 inch = 50 feet

Site Plan Submitted By Paul Lloyd **Date** 12/5/05

Plan Approved ✓ **Not Approved** ____ **Date** 12/12/05

By [illegible] Columbia **CPHU**

Notes:

```
* 03-4S-16-02739-248
-----------------------------------------------------------------------------------------------------------------------
LOT 48 TURKEY RUN S/D.            STANLEY CRAWFORD CONSTRUCTION  03-4S-16-02739-248                Columbia Cou
WD 1004-1341.                     1531 SW COMMERCIAL GLEN
                                                                                   PRINTED 10/21/2005 10:50
                                  LAKE CITY                      FL 32025          APPR     8/20/2003 JEFF
-----------------------------------------------------------------------------------------------------------------------
USE                          AE?            HTD AREA       .000 INDEX     3416.00 NBHD          PROP USE  000
MOD                 BATH                    EFF AREA            E-RATE       .000 INDX   STR   3- 4S- 16
EXW                 FIXT                    RCN                                  AYB    MKT AREA 06
   %                BDRM                    %GOOD               BLDG VAL         EYB    (PUD1
RSTR                RMS                ---------------------------------------------    AC        .640
RCVR                UNTS               ³FIELD CK:                                  ³    NTCD
   %                C-W%               ³LOC:   TURKEY RUN                          ³    APPR CD
INT                 HGHT               ³                                           ³    CNDO
   %                PMTR               ³                                           ³    SUBD
FLR                 STYS               ³                                           ³    BLK
   %                ECON               ³                                           ³    LOT
HTTP                FUNC               ³                                           ³    MAP# 45A
A/C                 SPCD               ³                                           ³
QUAL                DEPR               ³                                           ³    TXDT    002
FNDN                UD-1               ³                                           ³
SIZE                UD-2               ³                                           ³ -------------- BLDG TRA
CEIL                UD-3               ³                                           ³
ARCH                UD-4               ³                                           ³
FRME                UD-5               ³                                           ³
KTCH                UD-6               ³                                           ³
WNDO                UD-7               ³                                           ³
CLAS                UD-8               ³                                           ³
OCC                 UD-9               ³                                           ³
COND                   %               ³                                           ³----------------- PERMIT
SUB   A-AREA  %  E-AREA   SUB VALUE     ³                                           ³  NUMBER     DESC
                                        ³                                           ³
                                        ³                                           ³
                                        ³                                           ³ ------------------ SALE
                                        ³                                           ³ BOOK   PAGE     DATE
                                        ³                                           ³   1004   1341  1/12/200
                                        ³                                           ³ GRANTOR EVERETT A & KAT
                                        ³                                           ³ GRANTEE STANLEY CRAWFOR
                                        ³                                           ³
                                        ³                                           ³ GRANTOR
TOTAL                                    ---------------------------------------------  GRANTEE
-------EXTRA FEATURES--------------------------------- FIELD CK:                    ------------------------
AE BN  CODE      DESC       LEN   WID HGHT QTY QL   YR  ADJ        UNITS UT      PRICE   ADJ UT PR   SPCD %
-----------------------------------------------------------------------------------------------------------------------
    LAND   DESC      ZONE  ROAD {UD1 {UD3 FRONT DEPTH  FIELD CK:
AE  CODE             TOPO  UTIL {UD2 {UD4  BACK   DT     ADJUSTMENTS             UNITS UT      PRICE   ADJ UT P
Y 000000 VAC RES    RSF-2  0007                      1.00 1.00 1.00 1.00       1.000  LT   16500.000    16500.
                      0002 0003
 2006
```

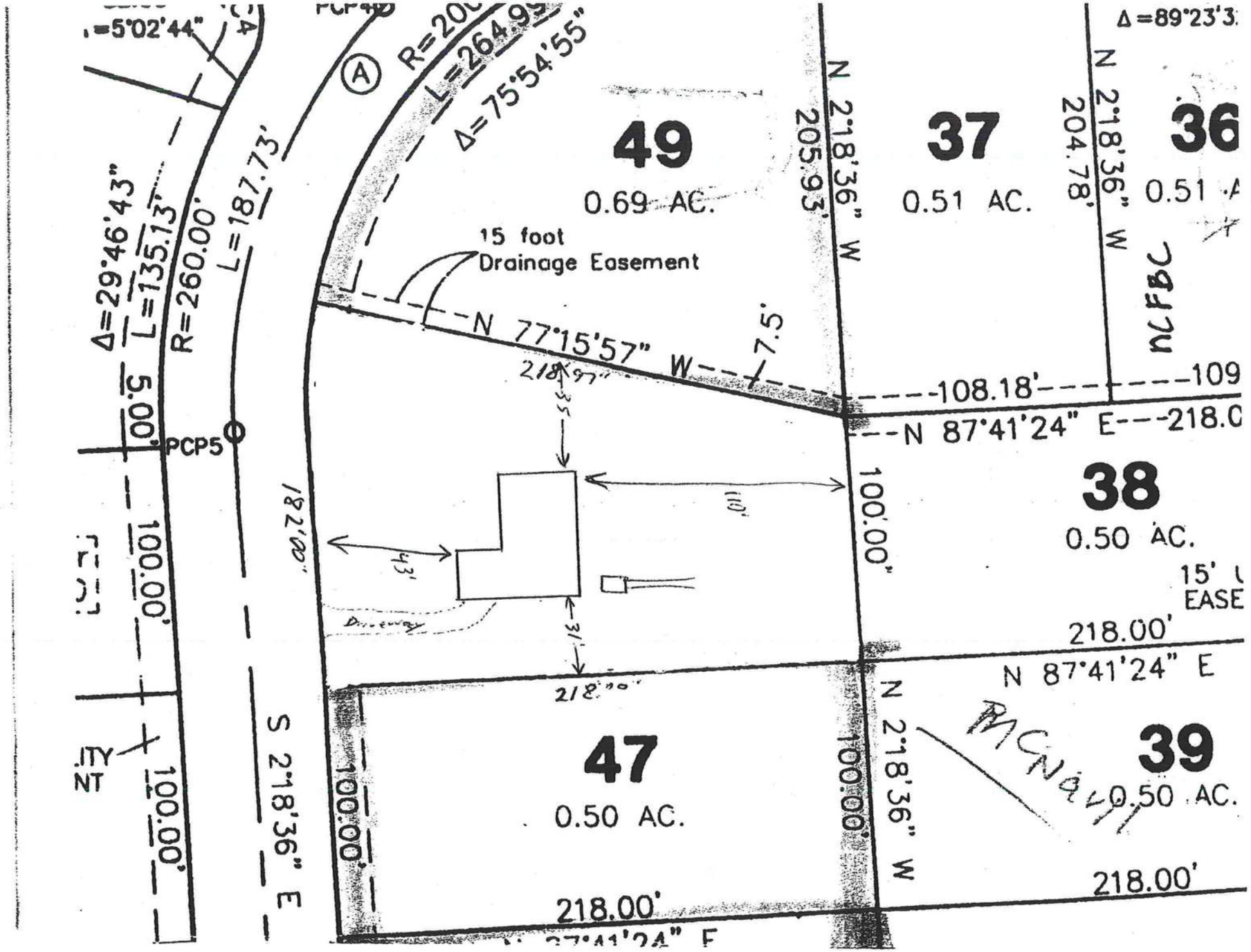
Δ=5°02'44"
PCP4
R=200
L=264.99
Δ=75°54'55"
Δ=89°23'3
49
0.69 AC.
37
0.51 AC.
36
0.51 A
N 2°18'36" W
205.93'
N 2°18'36" W
204.78'
15 foot
Drainage Easement
N 77°15'57" W
7.5'
108.18'
109
N 87°41'24" E
218.0
Δ=29°46'43"
L=135.13'
R=260.00'
L=187.73'
100.00'
PCP5
182.00'
110'
43'
31'
Driveway
100.00'
38
0.50 AC.
15' U
EASE
218.00'
N 87°41'24" E
S 2°18'36" E
100.00'
47
0.50 AC.
100.00'
218.00'
N 2°18'36" W
100.00'
39
0.50 AC.
218.00'

This instrument was Prepared By:
STANLEY CRAWFORD CONSTRUCTION, INC.
1531 S.W. Commercial Glen.
Lake City, Florida 32025

Inst:2005030671 Date:12/12/2005 Time:16:53
MK DC,P.DeWitt Cason,Columbia County B:1067 P:2443

PERMIT NO._____ TAX FOLIO NO.: _____

NOTICE OF COMMENCEMENT

STATE OF FLORIDA
COUNTY OF COLUMBIA

The undersigned hereby gives notice that improvement will be made to certain real Property, and in accordance with Chapter 713, Florida Statutes, the following information Is provided in this Notice of Commencement.

1. Description of property: Turkey Run Lot 48

2. General description of improvement: Construction of Dwelling

3. Owner information:
   Name and address: Stanley Crawford Construction
   853 S.W. Sisters Welcome Rd.
   Lake City, FL 32025

   b. Interest in property: Fee Simple

   c. Name and address of fee simple title holder (if other Than owner): NONE

4. Contractor: Stanley Crawford Construction, Inc.
   853 S.W. Sisters Welcome Rd. ,Lake City, FL 32025

5. Surety N/A
   a. Name and address:
   b. Amount of bond:

6. Lender:

7. Persons within the State of Florida designated by Owner upon whom notices Or other documents may be served as provided by Section 713.13 (1) (a) 7., Florida Statutes : NONE

8. In addition to himself, Owner designates _____ _____ to receive a copy of the Lienor's Notice as provided in section 713.13 (1) (b), Florida Statutes.

9. Expiration date of notice of commencement (the expiration date is 1 year from The date of recording unless a different date is specified).

Stanley Crawford

_____

The foregoing instrument was acknowledged before me this 12th day of December, 2005, by Stanley Crawford, who are personally known to me and who did not take an oath.

Janet L. Cheek
Notary Public
My Commission Expires: June 25, 2007

JANET L. CHEEK
MY COMMISSION # DD 226496
EXPIRES: June 25, 2007
Bonded Thru Notary Public Underwriters

From: The Columbia County Building Department
Plans Review
135 NE Hernando Av.
P. O Box 1529
Lake City Florida, 32056-1529

Reference to: Build permit application Number: 0512-28

Stanley Crawford /Owner Stanley Crawford Construction Lot 48 of Turkey Rum Subdivision

On the date of December 15, 2005 application 0512-28 and plans for construction of a single family dwelling were reviewed and the following information or alteration to the plans will be required to continue processing this application. If you should have any question please contact the above address, or contact phone number (386) 758-1163 or fax any information to (386) 754-7088.

Please include application number 0512-28 when making reference to this application.

1. Have Mr. Geisler show the all required fasteners for continuous tie from roof to foundation (truss anchors, straps, anchor bolts and washers) by using the engineered roof truss plans.

Thank you,

Joe Haltiwanger
Plan Examiner
Columbia County Building Department

NICHOLAS
PAUL
GEISLER
ARCHITECT
N.C.A.R.B. Certified

1758 NW Brown Road
Lake City, FL 32055
386/755-9021

21 DECEMBER 2005

JOHNNY KEARSE, BUILDING OFFICIAL
COLUMBIA COUNTY, BUILDING DEPT.
COLUMBIA COUNTY COURTHOUSE ANNEX
LAKE CITY, FLORIDA 32055

RE: STANLEY CRAWFORD: TURKEY RUN S/D, LOT 48
PERMIT Nr.: 0512-28

DEAR SIR:

PLEASE BE ADVISED THAT I HAVE REVIED THE ABOVE REFERENCED PROJECTS TRUSS ENGINEERING PACKAGE FOR UPLIFT RESISTANCE AND THE REQUIRED CONNECTORS FOR SAME. FOR ALL TRUSSES, UNLESS NOTED BELOW, "USP" STRUCTURAL CONNECTORS, MODEL HDPT2, W/ 6-8d NAILS, SHALL BE USED TO ATTACH TRUSSES TO THE WALL/BEAM SUPPORTING STRUCTURE.

FOR GIRDER HT1A:
"USP" HDPT2 W/ 8-10d NAILS, EA. END

FOR GIRDER DSG:
"USP" HDPTD W/ 8-10d NAILS, EA. END

FOR GIRDER CG:
"USP" MUGT15, W/ PHD2
MUGT15 - 1 5/8"Φ ALL THREAD ROD & 22-10d NAILS
PHD2 - 10 WS3 WOOD SCREWS
AT TIE TO FOUNDATION, PROVIDE PHD2 W/ 1 5/8"Φ ANC. BOLT, & 10 WS3 WOOD SCREWS

NOTE: THE MINIMUM REQUIRED PENETRATION FOR ALL NAILS SHALL BE 1 1/2"INTO THE PARENT WOOD.

PLEASE REFER TOTHE ATTACHED TRUSS PLACEMENT DRAWING FOR THE LOCATION OF THE ABOVE NOTED GIRDERS.

SHOULD YOU HAVE ANY FURTHER QUESTIONS WITH THIS, PLEASE CALL FOR ASSISTANCE.

YOURS TRULY,
NICHOLAS PAUL GEISLER, ARCHITECT AR0007005

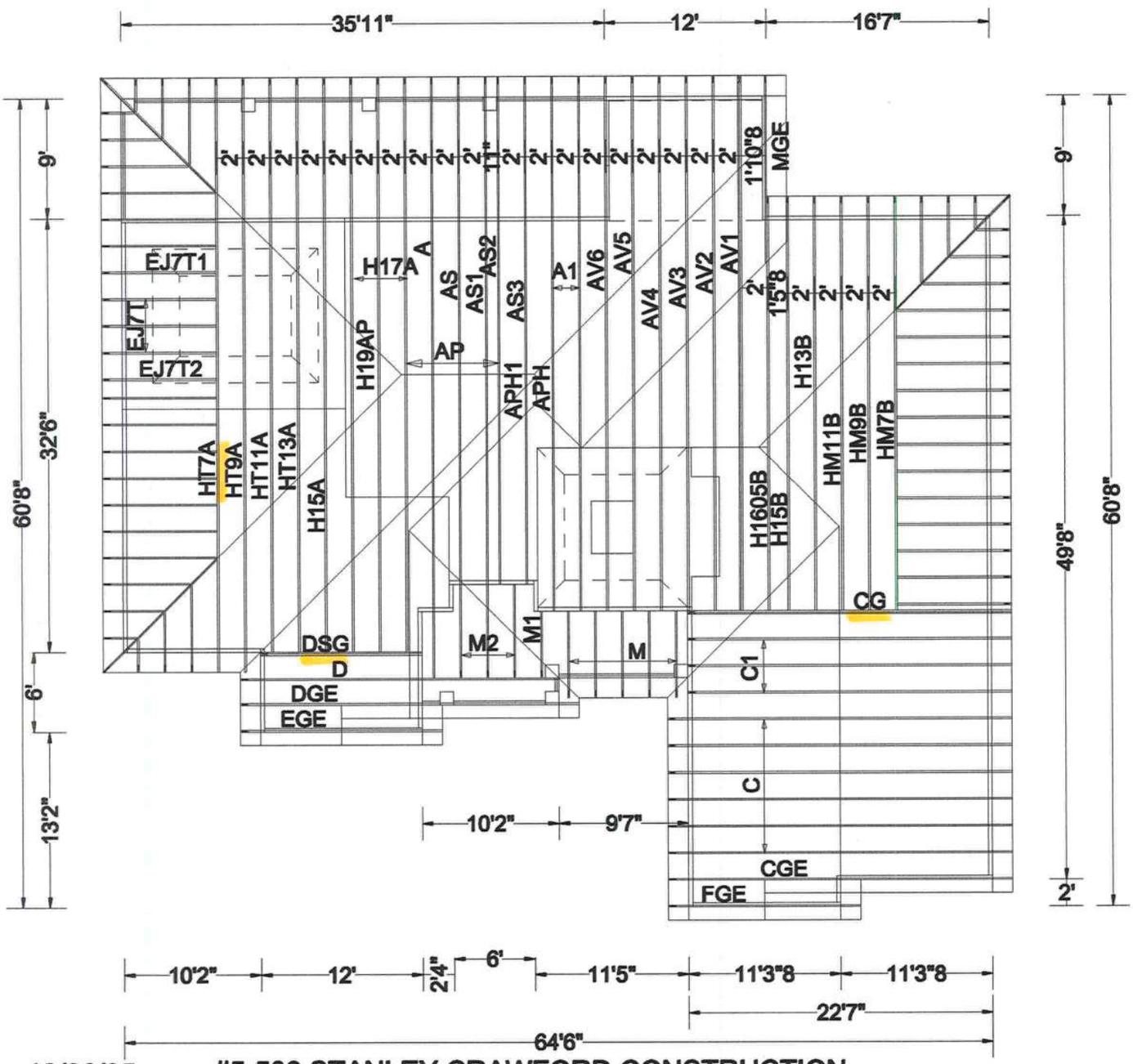

12/06/05

#5-509 STANLEY CRAWFORD CONSTRUCTION - LOT #48 TURKEY RUN

MIAMI-DADE

MIAMI-DADE COUNTY, FLORIDA
METRO-DADE FLAGLER BUILDING

BUILDING CODE COMPLIANCE OFFICE
METRO-DADE FLAGLER BUILDING
140 WEST FLAGLER STREET, SUITE 1603
MIAMI, FLORIDA 33130-1563
(305) 375-2901 FAX (305) 375-2908

CONTRACTOR LICENSING SECTION
(305) 375-2527 FAX (305) 375-2558

CONTRACTOR ENFORCEMENT DIVISION
(305) 375-2966 FAX (305) 375-2908

PRODUCT CONTROL DIVISION
(305) 375-2902 FAX (305) 372-6339

PRODUCT CONTROL NOTICE OF ACCEPTANCE

Premdor Entry Systems
911 E. Jeferson, P.O. Box 76
Pittsburgh ,KS 66762

Your application for Notice of Acceptance (NOA) of:
Entergy 6-8 S/E Inswing Opaque Double w/sidelites Residential Insulated Steel Door
under Chapter 8 of the Code of Miami-Dade County governing the use of Alternate Materials and Types of Construction, and completely described herein, has been recommended for acceptance by the Miami-Dade County Building Code Compliance Office (BCCO) under the conditions specified herein.

This NOA shall not be valid after the expiration date stated below. BCCO reserves the right to secure this product or material at any time from a jobsite or manufacturer's plant for quality control testing. If this product or material fails to perform in the approved manner, BCCO may revoke, modify, or suspend the use of such product or material immediately. BCCO reserves the right to revoke this approval, if it is determined by BCCO that this product or material fails to meet the requirements of the South Florida Building Code.

The expense of such testing will be incurred by the manufacturer.

ACCEPTANCE NO.: 01-0314.23
EXPIRES: 04/02/2006

Raul Rodriguez
Chief Product Control Division

THIS IS THE COVERSHEET, SEE ADDITIONAL PAGES FOR SPECIFIC AND GENERAL CONDITIONS
BUILDING CODE & PRODUCT REVIEW COMMITTEE

This application for Product Approval has been reviewed by the BCCO and approved by the Building Code and Product Review Committee to be used in Miami-Dade County, Florida under the conditions set forth above.

Francisco J. Quintana, R.A.
Director
Miami-Dade County
Building Code Compliance Office

APPROVED: 06/05/2001

Premdor Entry Systems

ACCEPTANCE No.: 01-0314.23

APPROVED : JUN 05 2001

EXPIRES : April 02, 2006

NOTICE OF ACCEPTANCE: SPECIFIC CONDITIONS

1. SCOPE

1.1 This **renews** the Notice of Acceptance No. 00-0321.25 which was issued on April 28, 2000. It approves a residential insulated door, as described in Section 2 of this Notice of Acceptance, designed to comply with the South Florida Building Code (SFBC), 1994 Edition for Miami-Dade County, for the locations where the pressure requirements, as determined by SFBC Chapter 23, do not exceed the Design Pressure Rating values indicated in the approved drawings.

2. PRODUCT DESCRIPTION

2.1 The **Series Entergy 6-8 S/E Inswing Opaque Double Residential Insulated Steel Doors with Sidelites-Impact Resistant Door Slab** Only and its components shall be constructed in strict compliance with the following documents: Drawing No **31-1029-EM-I**, Sheets 1 through 6 of 6, titled "Premdor (Entergy Brand) Double Door with Sidelites in Wood Frames with Bumper Threshold (Inswing)," prepared by manufacturer, dated 7/29/97 with revision C dated 01/11/00, bearing the Miami-Dade County Product Control approval stamp with the Notice of Acceptance number and approval date by the Miami-Dade County Product Control Division. These documents shall hereinafter be referred to as the approved drawings.

3. LIMITATIONS

3.1 This approval applies to single unit applications of pair of doors and single door only, as shown in approved drawings. Single door units shall include all components described in the active leaf of this approval.

3.2 Unit shall be installed only at locations protected by a canopy or overhang such that the angle between the edge of canopy or overhang to sill is less than 45 degrees. Unless unit is installed in non-habitable areas where the unit and the area are designed to accept water infiltration.

4. INSTALLATION

4.1 The residential insulated steel door and its components shall be installed in strict compliance with the approved drawings.

4.2 Hurricane protection system (shutters):

4.2.1 Door: the installation of this unit **will not require** a hurricane protection system.

4.2.2 Sidelite: the installation of this unit **will require** a hurricane protection system.

5. LABELING

5.1 Each unit shall bear a permanent label with the manufacturer's name or logo, city, state and following statement: "Miami-Dade County Product Control Approved".

6. BUILDING PERMIT REQUIREMENTS

6.1 Application for building permit shall be accompanied by copies of the following:

6.1.1 This Notice of Acceptance

6.1.2 Duplicate copies of the approved drawings, as identified in Section 2 of this Notice of Acceptance, clearly marked to show the components selected for the proposed installation.

6.1.3 Any other documents required by the Building Official or the South Florida Building Code (SFBC) in order to properly evaluate the installation of this system.

Manuel Perez

Manuel Perez, P.E. Product Control Examiner
Product Control Division

Premdor Entry Systems

ACCEPTANCE No. 01-0314.23

APPROVED : JUN 0 5-2001

EXPIRES : April 02, 2006

NOTICE OF ACCEPTANCE: STANDARD CONDITIONS

1. Renewal of this Acceptance (approval) shall be considered after a renewal application has been filed and the original submitted documentation, including test supporting data, engineering documents, are no older than eight (8) years.

2. Any and all approved products shall be permanently labeled with the manufacturer's name, city, state, and the following statement: "Miami-Dade County Product Control Approved", or as specifically stated in the specific conditions of this Acceptance.

3. Renewals of Acceptance will not be considered if:
   a. There has been a change in the South Florida Building Code affecting the evaluation of this product and the product is not in compliance with the code changes.
   b. The product is no longer the same product (identical) as the one originally approved.
   c. If the Acceptance holder has not complied with all the requirements of this acceptance, including the correct installation of the product.
   d. The engineer who originally prepared, signed and sealed the required documentation initially submitted, is no longer practicing the engineering profession.

4. Any revision or change in the materials, use, and/or manufacture of the product or process shall automatically be cause for termination of this Acceptance, unless prior written approval has been requested (through the filing of a revision application with appropriate fee) and granted by this office.

5. Any of the following shall also be grounds for removal of this Acceptance:
   a. Unsatisfactory performance of this product or process.
   b. Misuse of this Acceptance as an endorsement of any product, for sales, advertising or any other purposes.

6. The Notice of Acceptance number preceded by the words Miami-Dade County, Florida, and followed by the expiration date may be displayed in advertising literature. If any portion of the Notice of Acceptance is displayed, then it shall be done in its entirety.

7. A copy of this Acceptance as well as approved drawings and other documents, where it applies, shall be provided to the user by the manufacturer or its distributors and shall be available for inspection at the job site at all time. The engineer needs not reseal the copies.

8. Failure to comply with any section of this Acceptance shall be cause for termination and removal of Acceptance.

9. This Notice of Acceptance consists of pages 1, 2 and this last page 3.

END OF THIS ACCEPTANCE

Manuel Perez

Manuel Perez, P.E., Product Control Examiner
Product Control Division

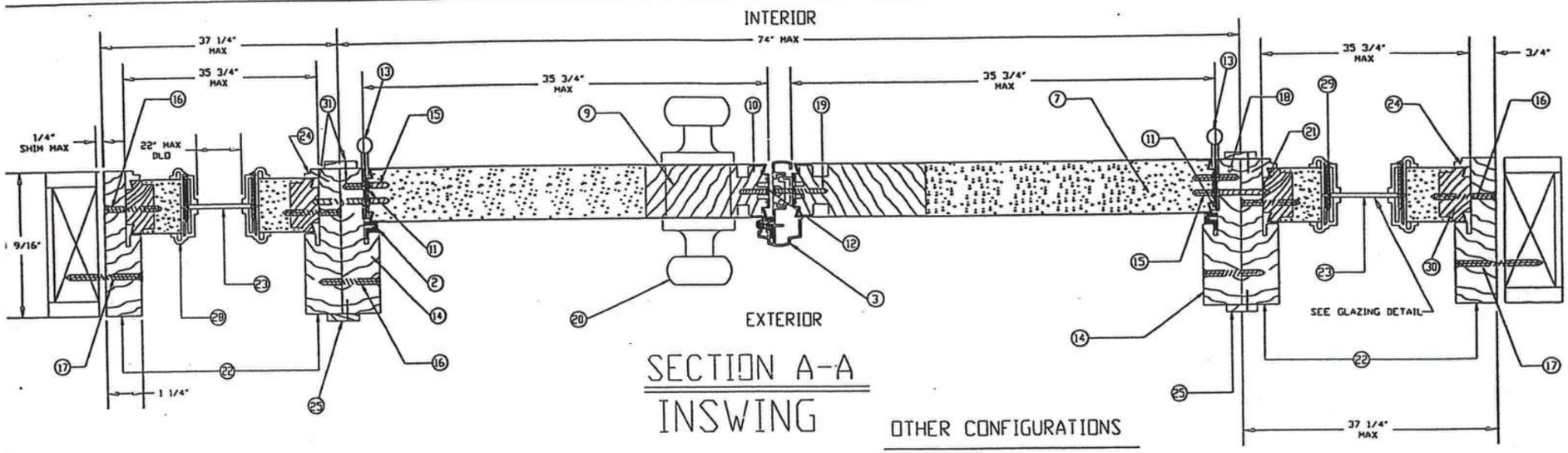

SECTION A-A
INSWING

OTHER CONFIGURATIONS

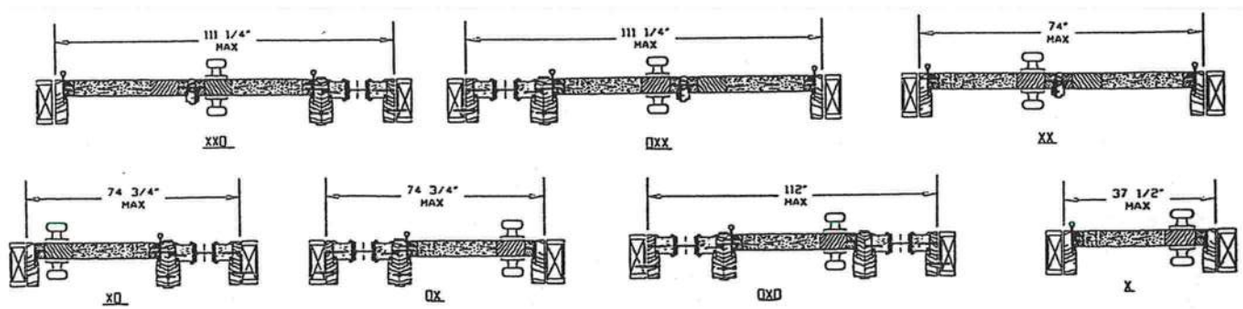

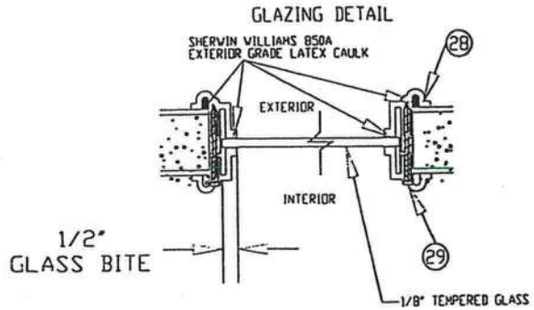

APPROVED AS COMPLYING WITH THE SOUTH FLORIDA BUILDING CODE
DATE JUN 05 2001
BY
PRODUCT CONTROL DIVISION
BUILDING CODE COMPLIANCE OFFICE
ACCEPTANCE NO. 01-0314.23

C	DADE COUNTY MODIFICATIONS	5/11/00	JD
B	ADDED PAGE 5 (DOOR OPTIONS)	10-1-98	RS
A	ADD SCREWS TO LITE FRAMES & ADD OTHER DOOR CONFIGURATIONS	2-18-97	RS
LTR	REVISIONS	DATE	BY

LINTS UNLESS NOTED FDC : REC : ANG :
EXTRUSIONS UNLESS NOTED STR CONL 10.5
ENGINEER:
FILE NAME: ENTRYGY DOOR W/SIDELITES (A-A)
DR BY RS | DATE 7-29-97 | MATL: | SCALE NTS

PREMDOR ENTRY SYSTEMS
501 E. JEFFERSON
PITTSBURG, KS 66762

31-1029-EM-1
SHEET 2 OF 6

REVISION LETTER C

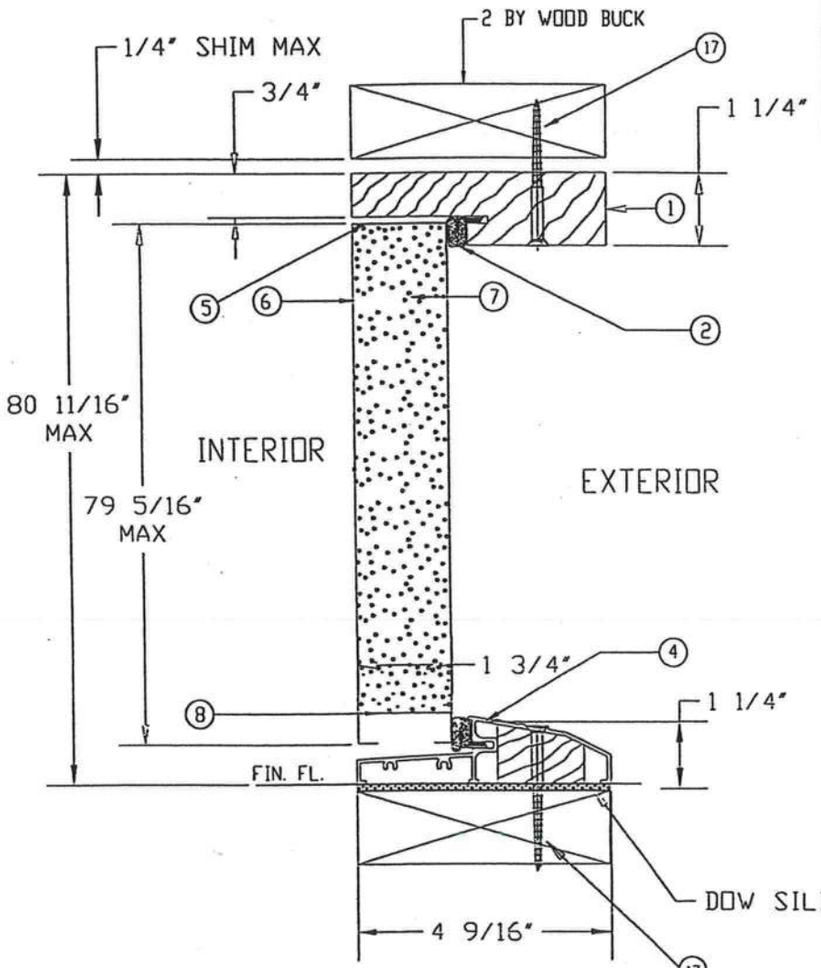

SECTION B-B

MATERIALS LIST

ITEM NO.	DESCRIPTION	PART NUMBER	COMMENTS
1	WOOD HEAD JAMB	EM-14	1 1/4" X 4 9/16" MTL. TO BE PINE OR EQUIVALENT
2	COMPRESSION WEATHERSTRIP	EM-25	LOCKSCREEN BRAND LOXSEAL 9650 (BRONZE)
3	ALUMINUM ASTRAGAL	EM-12	PREMDOR BRAND OR EQUIVALENT- 5/8" ALUMINUM ASTRAGA
4	ALUMINUM-BUMPER THRESHOLD	EM-15	PREMDOR BRAND OR EQUIVALENT - 1 1/4" x 4 9/16"
5	TOP CHANNEL	EM-08	PREMDOR BRAND - 1 11/16" - 20 GA STEEL
6	STEEL SKIN	26 ga. (.017 +.004 -.000)	MIN. YIELD STRENGTH 25,000 PSI MIN. THICKNESS PER TENSILE TEST REPORT IS .021"
7	POLYURETHANE FOAM CORE	BASF FOAM - DENSITY 2.0 TO 2.5 lbs./ft³	
8	BOTTOM CHANNEL	EM-07	PREMDOR BRAND - 1 11/16" - 20 GA STEEL
9	WOOD LOCK BLOCK	EM-09	4" X 9 1/2" MTL. TO BE PINE OR EQUIVALENT
10	STRIKE STILE	EM-06	PREMDOR BRAND - 1 11/16" - 20 GA STEEL
11	HINGE STILE	EM-05	PREMDOR BRAND - 1 11/16" - 20 GA STEEL
12	LOCK PREP FILLER PLATE	EM-10	PREMDOR BRAND - .050" THICK- MTL. TO BE POLYETHYLEN
13	4"x4" HINGE	EM-16	HAGER BRAND HINGE OR EQUIVALENT - .097 THICK (STEEL
14	WOOD HINGE JAMB	EM-13	1 1/4" X 4 9/16" MTL. TO BE PINE OR EQUIVALENT
15	#10-24 x 1/2" F.H.M.S.		(4) SCREWS PER HINGE INTO DOOR
16	#10 X 2" F.H.W.S.		(5) SCREWS THROUGH HINGE JAMB INTO SIDELITE JAMB, 8" DOWN FROM TO MAX 18" O.C. THEREAFTER (10) SCREWS THROUGH STRIKE JAMB INTO SIDELITE JAMB, 4" DOWN FROM TI MAX 8" O.C. THEREAFTER (6) SCREWS THROUGH EACH SIDELITE JAMB INTO SIDELITE, 4" DOWN FROM TOP, MAX 15" O.C. THEREAFTER
17	#10 F.H.W.S. W/MINIMUM 1 1/2 EMBEDMENT OR 3/16" PFH TAPCONS W/MINIMUM 1 1/2" EMBEDMENT		REFER TO ELEVATION VIEW, FOR # OF SCREWS USED AND LOCATIONS
18	#10 X 3/4" F.H.W.S.		(2) SCREWS PER HINGE INTO JAMB
19	#8 x 2" F.H.W.S.		(2) SCREWS AT EACH STRIKE PLATE
20	LOCKSET		KWIKSET BRAND 200 LOCK OR HARLOC BRAND 100 LOCK
21	#10 X 1 3/4" F.H.W.S.		(2) SCREWS PER HINGE INTO JAMB
22	WOOD SIDELITE JAMB	EM-18	1 1/4" X 4 9/16" MTL. TO BE PINE OR EQUIVALENT
23	22" X 64" SINGLE PANEL GLASS	EM-19	TEMPERED GLASS IN POLYPROPYLENE FRAME- DC-1643 - (ODL- 1/8" CLEAR TEMPERED GLASS
24	SIDELITE TRIM (WOOD)	EM-20	5/16 x 1/2" MTL. TO BE PINE OR EQUIVALENT
25	WOOD CASING	EM-21	1/8" x 1" MTL. TO BE PINE OR EQUIVALENT - ITEMS ARE MOLDINGS USI FOR "SIDE BY SIDE JAMBS" AS MULLIONS
26	WOOD SIDELITE HEAD JAMB	EM-22	1 1/4" X 4 9/16" MTL. TO BE PINE OR EQUIVALENT
27	WOOD SIDELITE BASE	EM-23	1 1/4" X 4 9/16" MTL. TO BE PINE OR EQUIVALENT
28	POLYPROPYLENE LITE FRAME	DC-1643, ODL-2	HP Polypropylene by ODL
29	#6 X 1 1/2" PAN HEAD SCREWS		18 PER FRAME SCREW SPACING TO BE 3" IN FROM EACH CORNER AND NO TO EXCEED 14" OC THERE AFTER.
30	SIDELITE STILES	EM-26	15/16" X 1 11/16" MTL. TO BE PINE OR EQUIVALENT
31	PIN NAIL		3/4" LONG NAIL, 4" IN FROM END, MAX 8" O.C. THERAFTER, USED ON MULLIONS AND TRI

APPROVED AS COMPLYING WITH THE SOUTH FLORIDA BUILDING CODE
DATE JUN 05 2001
BY
PRODUCT CONTROL DIVISION
BUILDING CODE COMPLIANCE OFFICE
ACCEPTANCE NO. 01-0314.23

LIMITS: UNLESS NOTED, FRAC. : DEC. : ANG. :
EXTRUSIONS: UNLESS NOTED, STD. COM'L. TOL'S.

LTR	REVISIONS	DATE	BY
B	DADE COUNTY MODIFICATIONS	1/11/01	JD
A	ADDED PAGE 5 (DOOR OPTIONS)	10-1-98	RS

ENGINEER:
DR. BY R.S. | DATE 7-29-97
PART NAME: ENTERGY STEEL EDGE DOOR (R-B)
MAT'L: | SCALE:

PREMDOR ENTRY SYSTEMS
911 E. JEFFERSON
PITTSBURG, KS. 66762

A

31-1029-EM-I
SHEET 3 OF 6

REVISION LETTER B

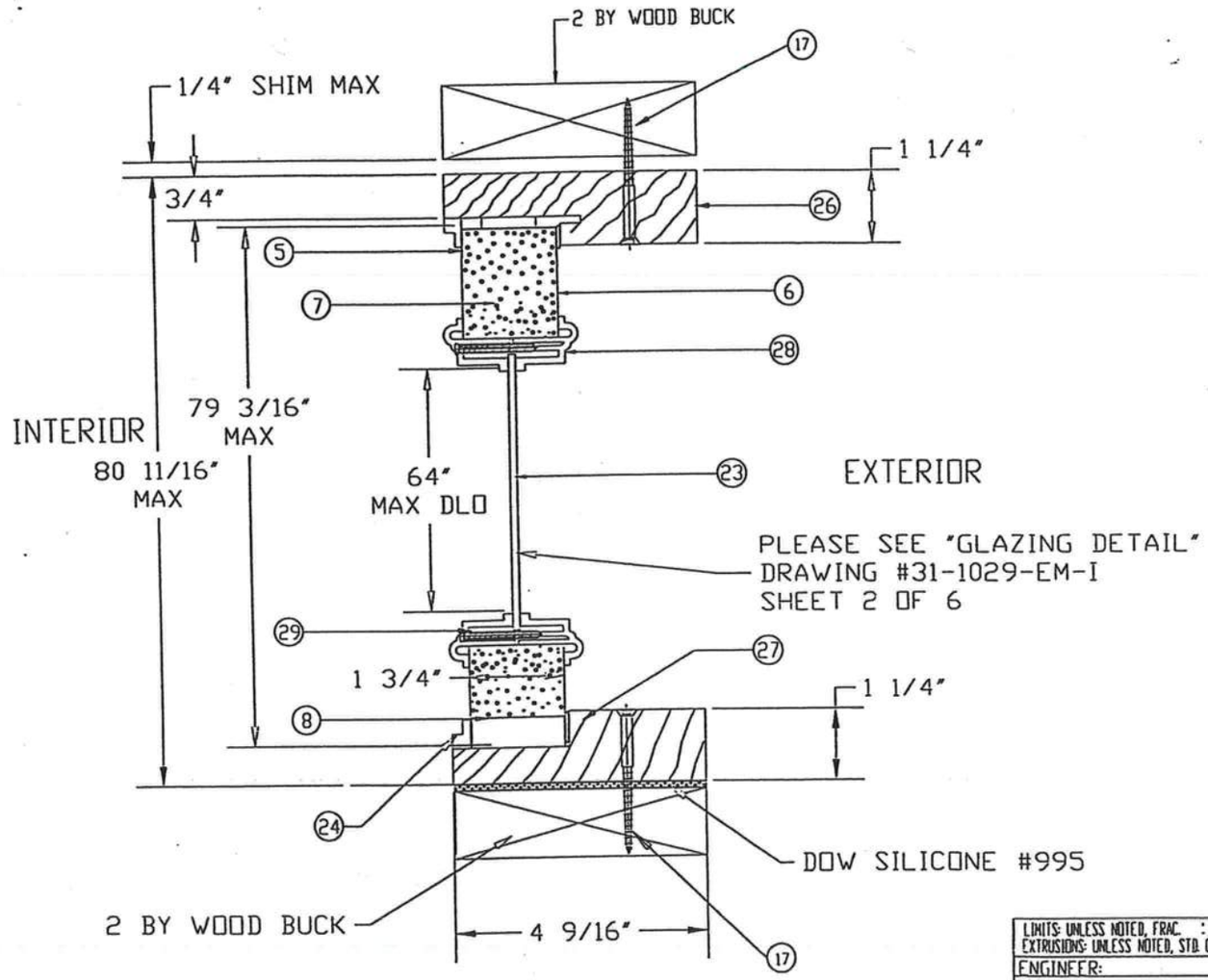

SECTION C-C

APPROVED AS COMPLYING WITH THE
SOUTH FLORIDA BUILDING CODE
DATE JUN 05 2001
BY
PRODUCT CONTROL DIVISION
BUILDING CODE COMPLIANCE OFFICE
ACCEPTANCE NO. 01-0314.23

LIMITS: UNLESS NOTED, FRAC. : DEC. : ANG. :
EXTRUSIONS: UNLESS NOTED, STD. COM'L. TOL'S.

ENGINEER:

DR. BY R.S. | DATE 7-29-97

LTR.	REVISIONS	DATE	BY
D	DADE COUNTY MODIFICATIONS	1/11/01	JD
C	MATERIAL WAS POLYSTYRENE	6-2-99	RS
B	ADDED PAGE 5 (DOOR OPTIONS)	10-1-98	RS
A	ADD SCREWS TO LITE FRAME & MATERIAL LIST	12-18-97	R.S.

PART NAME: ENTERGY METAL EDGE SIDELITE (C-C)
MAT'L: SCALE:

PREMDOR ENTRY SYSTEMS
911 E. JEFFERSON
PITTSBURG, KS. 66762

31-1029-EM-I
SHEET 4 OF 6

REVISION LETTER D

OTHER DOOR CONFIGURATIONS

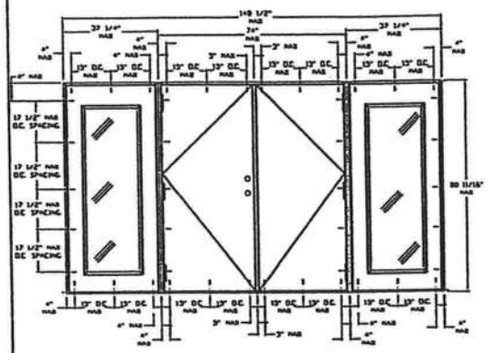

OXO

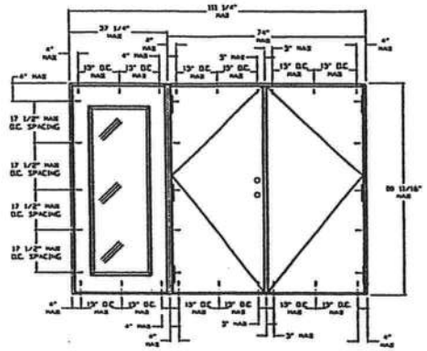

OX

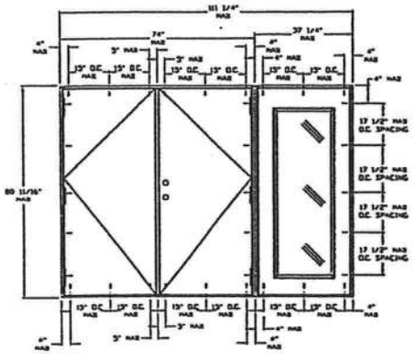

XO

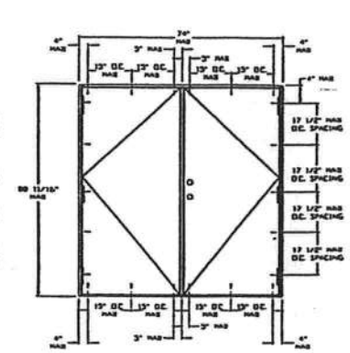

XX

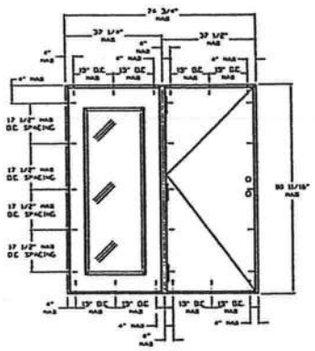

OX

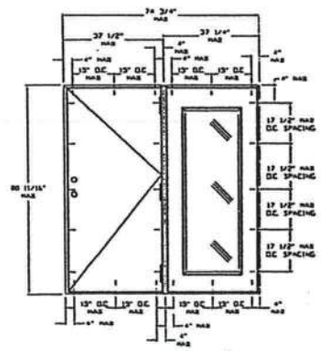

XO

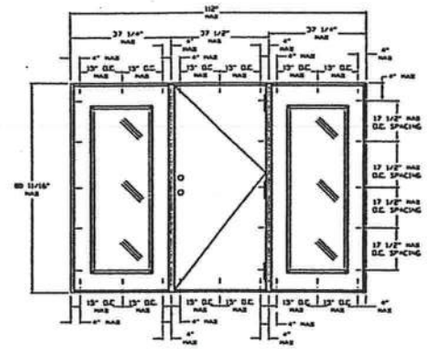

OXO

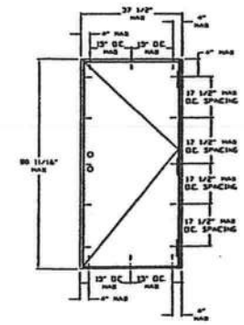

X

APPROVED AS COMPLYING WITH THE
SOUTH FLORIDA BUILDING CODE
DATE JUN 05 2001
BY Manuel Sosa
PRODUCT CONTROL DIVISION
BUILDING CODE COMPLIANCE OFFICE
ACCEPTANCE NO. 01-0314.23

LIMITS: UNLESS NOTED, FRAC : DEC : ANG : EXTRUSIONS: UNLESS NOTED, STD. COML. TOL'S.			
ENGINEER:	LTR	REVISIONS	DATE	BY
	PART NAME:			
DR. BY J.D.	DATE 1-11-01	MAT'L:	SCALE:	
PREMDOR ENTRY SYSTEMS 911 E. JEFFERSON PITTSBURG, KS. 66762		31-1029-EM-I SHEET 5 OF 6		
			REVISION LETTER	

OTHER DOOR PANEL STYLES

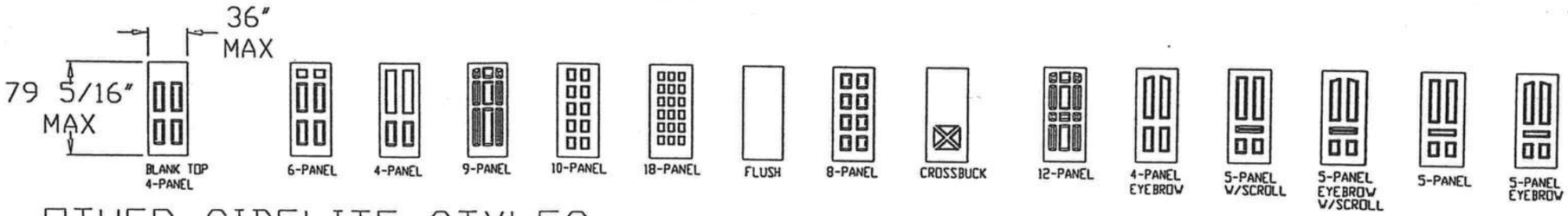

OTHER SIDELITE STYLES

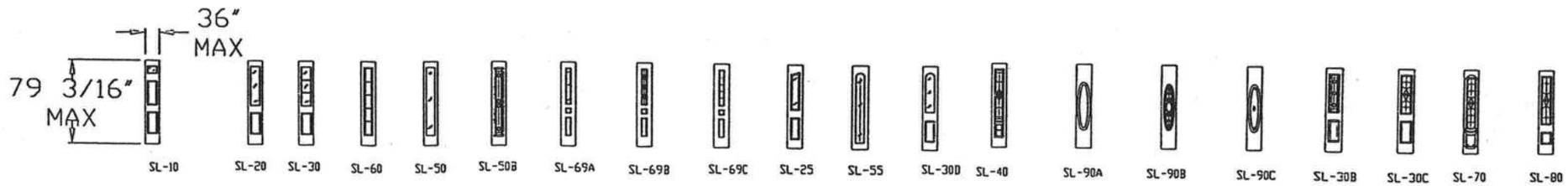

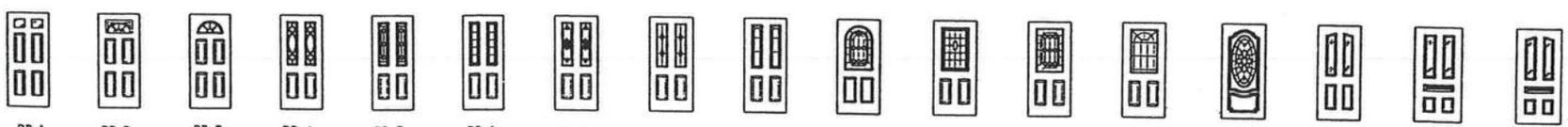

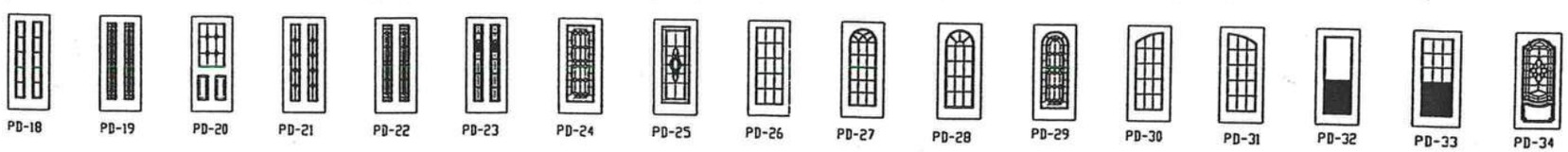

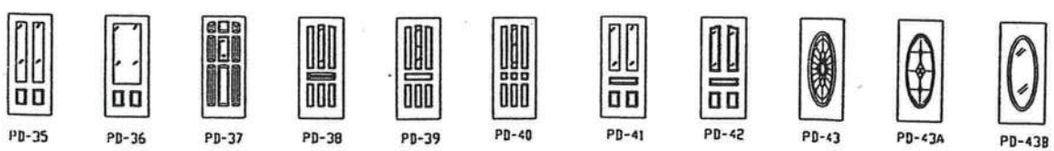

APPROVED AS COMPLYING WITH THE SOUTH FLORIDA BUILDING CODE
DATE JUN 05 2001
BY [signature]
PRODUCT CONTROL DIVISION
BUILDING CODE COMPLIANCE OFFICE
ACCEPTANCE NO 01-0319.23

LIMITS: UNLESS NOTED, FRAC. : DEC. : ANG. :
EXTRUSIONS: UNLESS NOTED, STD. COMM. TOL'S.
ENGINEER:
DR. BY J.D. | DATE 1/15/01

LTR	REVISIONS	DATE	BY

PART NAME: PREMDOR DOOR OPTIONS
MAT'L:
SCALE:

PREMDOR ENTRY SYSTEMS
911 E. JEFFERSON
PITTSBURG, KS. 66762

31-1029-EM-I
SHEET 6 OF 6

REVISION LETTER

PREMDOR (ENTERGY BRAND) DOUBLE DOOR WITH SIDELITES IN WOOD FRAMES WITH BUMPER THRESHOLD (INSWING)

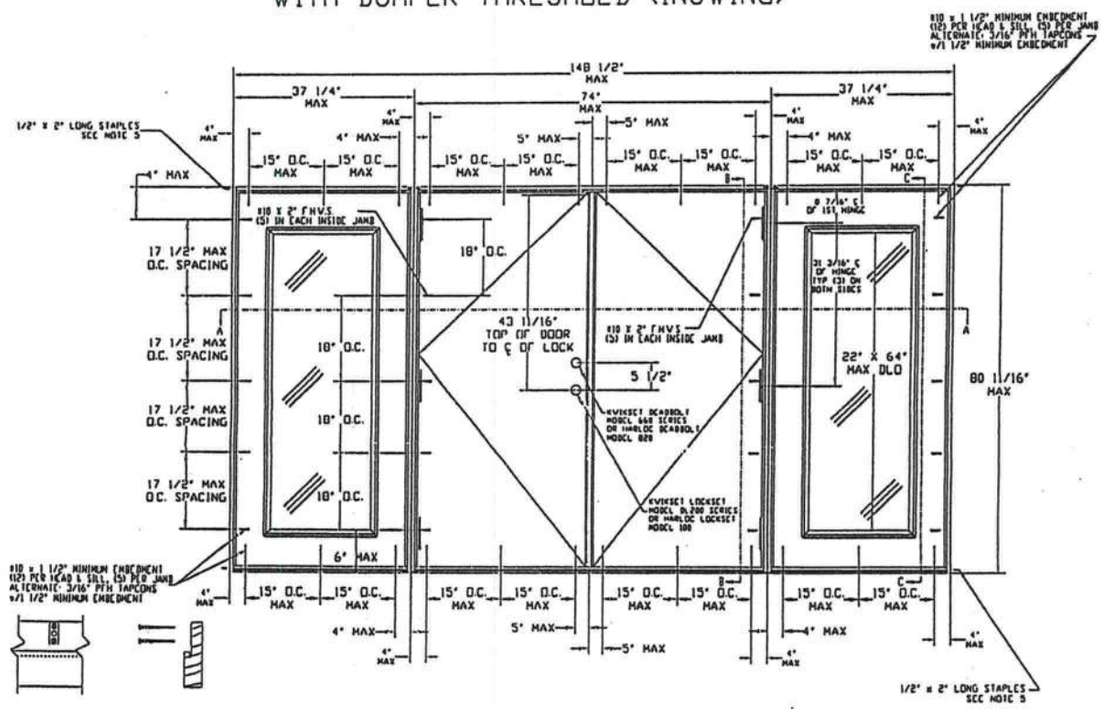

ATTACH ASTRAGAL THROW BOLT STRIKE PLATE TO THE HEADER AND THRESHOLD WITH #10 x 1 3/4" FLATHEAD SCREWS

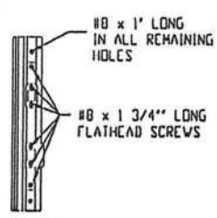

ASTRAGAL

NOTES:

.) WOOD BUCKS BY OTHERS. MUST BE ANCHORED PROPERLY TO TRANSFER LOADS TO THE STRUCTURE.

2.) THE PRECEDING DRAWINGS ARE INTENDED TO QUALIFY THE FOLLOWING INSTALLATIONS.

\. WOOD FRAME CONSTRUCTION WHERE DOOR SYSTEM IS ANCHORED TO A MINIMUM TWO BY WOOD OPENING.

). MASONRY OR CONCRETE CONSTRUCTION WHERE DOOR SYSTEM IS ANCHORED TO A MINIMUM TWO BY STRUCTURAL WOOD BUCK.

:. MASONRY OR CONCRETE CONSTRUCTION WHERE DOOR SYSTEM IS ANCHORED DIRECTLY TO CONCRETE OR MASONRY WITH OR WITHOUT A NON-STRUCTURAL INC BY WOOD BUCK.

I. ALL ANCHORING SCREWS TO BE #10 WITH MINIMUM 1 1/2" EMBEDMENT INTO WOOD SUBSTRATE OR 3/16" PFH TAPCONS WITH 1 1/2" MINIMUM EMBEDMENT INTO MASONRY.

. UNIT MUST BE INSTALLED WITH 'MIAMI-DADE COUNTY APPROVED' SHUTTERS

. THREE STAPLES PER SIDE JAMB INTO HEADER ON SIDELITES AND DOOR, THREE STAPLES PER JAMB INTO THRESHOLD ON SIDELITES AND DOOR.

. LATEX SEALANT TO BE APPLIED AT SIDE BY SIDE JAMBS AND SIDELITES.

. DOOR/SIDELITE HEADER, DOOR/SIDELITE JAMBS, AND SIDELITE BASE CORNERS ARE COPED AND BUTT JOINED.

I. DOORS SHALL BE PRE-PAINTED WITH A WATER-BASED EPOXY RUST INHIBITIVE PRIMER PAINT WITH A DRY FILM THICKNESS OF 0.8 TO 1.2 MIL.

). FRAMES SHALL BE PRE-PAINTED WITH AN ACRYLIC LATEX WATER-BASED/ WATER-REDUCIBLE WHITE PRIMER WITH A DRY FILM THICKNESS OF 0.8 TO 1.2 MIL.

DESIGN PRESSURE RATINGS		
	WHERE WATER INFILTRATION REQUIREMENT IS NEEDED *	WHERE WATER INFILTRATION REQUIREMENT IS NOT NEEDED
Positive	NOT APPROVED *	+55.0 psf
Negative	NOT APPROVED *	-55.0 psf

* UNITS SHALL BE INSTALLED ONLY AT LOCATIONS PROTECTED BY A CANOPY OR OVERHANG SUCH THAT THE ANGLE BETWEEN THE EDGE OF CANOPY OR OVERHANG TO SILL IS LESS THAN 45 DEGREES. UNLESS UNIT IS INSTALLED IN NON-HABITABLE AREAS WHERE THE UNIT AND THE AREA ARE DESIGNED TO ACCEPT WATER INFILTRATION.

APPROVED AS COMPLYING WITH THE SOUTH FLORIDA BUILDING CODE
DATE JUN 05 2001
BY [signature]
PRODUCT CONTROL DIVISION
BUILDING CODE COMPLIANCE OFFICE
ACCEPTANCE NO. 01-0314.23

C	DADE COUNTY MODIFICATIONS	11/11/00	JD
B	ADDED PAGE 5 (DOOR OPTIONS)	10-1-98	RS
A	ADD OTHER DOOR CONFIGURATIONS	12/18/97	RS
LTR	REVISIONS	DATE	BY

UNITS: UNLESS NOTED, FRAC. ± DEC. ± ANG. ±
EXTRUSIONS: UNLESS NOTED, STD. COML. TOL'S
ENGINEER:
DR. BY R.S. | DATE 7-29-97
PART NAME: ENTERGY METAL EXCEL DOUBLE DOOR W/SIDELITES
MAT'L: | SCALE: N.T.S.

PREMDOR ENTRY SYSTEMS
911 E. JEFFERSON
PITTSBURG, KS 66762

31-1029-EM-I
SHEET 1 OF 6

First Section

ELK Premium Roofing

March 6, 2002

Subject: Elk Product Approval Information

All Prestique® and Capstone® products manufactured in Tuscaloosa, AL are certified under the Miami – Dade County Building Code Office (BCCO). These products also meet the requirements for the Florida Building Code since they are MD approved. The following test protocols must be passed by each of the products in order for MD product certification:
ASTM D3462
PA 100 (110 mph uplift and wind driven rain resistance)
PA 107 (Modified ASTM D3161 - 110 mph wind uplift resistance)

The nailing patterns that were used during the PA 100 and PA 107 wind test protocols for the Prestique and Capstone products are listed below. Also listed below are the Miami – Dade Notice of Acceptance Numbers (NOA).

Raised Profile, Prestique High Definition, Prestique 25, or Prestique 30 –
PA 100 = 4 nails
PA 107 = 5 nails
MD NOA# = 01-1226.04

Prestique I 35 or Prestique I* –
PA 100 = 4 nails
PA 107 = 5 nails
MD NOA# = 01-1226.05

Prestique Plus or Prestique Gallery Collection* –
PA 100 = 4 nails
PA 107 = 4 nails
MD NOA# = 01-1226.03

Capstone*
PA 100 = 4 Nails
PA 107 = 4 Nails
MD NOA# = 01-0523.01
* As per the Elk Limited Warranty, six nails are required for the Elk high wind warranty.

If there are any questions please contact:

Mike Reed – Technical Manager
(205) 342-0287

or

Daniel DeJarnette – QA Engineer
(205) 342-0298

ELK ROOFING PRODUCTS SPECIFICATIONS – TUSCALOOSA, AL

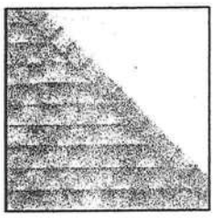

PRESTIQUE® HIGH DEFINITION®

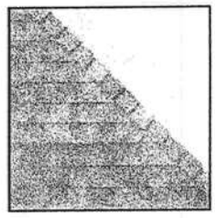

RAISED PROFILE™

High Definition

Product size	13¼"x 39⅜"
Exposure	5⅝"
Pieces/Bundle	16
Bundles/Square	4/98.5 sq.ft.
Squares/Pallet	11

50-year limited warranty period: non-prorated coverage for shingles and application labor for the initial 5 years, plus an option for transferability*; prorated coverage for application labor and shingles for balance of limited warranty period; 5-year limited wind warranty*.

Product size	13¼"x 38¾"
Exposure	5⅝"
Pieces/Bundle	22
Bundles/Square	3/100 sq.ft.
Squares/Pallet	16

30-year limited warranty period: non-prorated coverage for shingles and application labor for the initial 5 years, plus an option for transferability*; prorated coverage for application labor and shingles for balance of limited warranty period; 5-year limited wind warranty*.

High Definition

Product size	13¼"x 39⅜"
Exposure	5⅝"
Pieces/Bundle	16
Bundles/Square	4/98.5 sq.ft.
Squares/Pallet	14

40-year limited warranty period: non-prorated coverage for shingles and application labor for the initial 5 years, plus an option for transferability*; prorated coverage for application labor and shingles for balance of limited warranty period; 5-year limited wind warranty*.

HIP AND RIDGE SHINGLES

Size: 12"x 12"
Exposure: 6⅝"
Pieces/Bundle: 45
Coverage: 4 Bundles = 100 linear feet

High Definition

Product size	13¼"x 38¾"
Exposure	5⅝"
Pieces/Bundle	22
Bundles/Square	3/100 sq.ft.
Squares/Pallet	16

30-year limited warranty period: non-prorated coverage for shingles and application labor for the initial 5 years, plus an option for transferability*; prorated coverage for application labor and shingles for balance of limited warranty period; 5-year limited wind warranty*.

52 Bundles/Pallet
18 Pallets/Truck
936 Bundles/Truck
19 Pieces/Bundle
1 Bundle = 120.33 linear feet

Available Colors: Antique Slate, Weatheredwood, Shakewood, Sablewood, Hickory, Barkwood**, Forest Green, Wedgewood**, Birchwood**, Sandalwood. Gallery Collection: Balsam Forest*, Weathered Sage*, Sienna Sunset*.

All Prestique, Raised Profile and Seal-A-Ridge roofing products contain Elk WindGuard® sealant. WindGuard activates with the sun's heat, bonding shingles into a wind and weather resistant cover that resists blow-offs and leaks.

Check for availability with built-in StainGuard® treatment to inhibit the discoloration of roofing granules caused by the growth of certain types of algae. Not available in Sablewood.

All Prestique and Raised Profile shingles meet UL® Wind Resistant (UL 997) and Class "A" Fire Ratings (UL 790); and ASTM Specifications D 3018, Type-I; D 3161, Type-I; E 108 and the requirements of ASTM D 3462.

All Prestique and Raised Profile shingles meet the latest Metro Dade building code requirements.

***See actual limited warranty for conditions and limitations.**
****Check for product availability.**

SPECIFICATIONS

SCOPE: Work includes furnishing all labor, materials and equipment necessary to complete installation of (name) shingles specified herein. Color shall be (name of color). Hip and ridge type to be Elk Seal-A-Ridge with formula *FLX*.

All exposed metal surfaces (flashing, vents, etc.) to be painted with matching Elk roof accessory paint.

PREPARATION OF ROOF DECK: Roof deck to be dry, well-seasoned 1" x 6" (25.4mm x 152.4mm) boards; exterior-grade plywood (exposure 1 rated sheathing) at least 3/8" (9.525mm) thick conforming to the specifications of the American Plywood Association; 7/16" (11.074mm) oriented strandboard; or chipboard. Most fire retardant plywood decks are NOT approved substrates for Elk shingles. Consult Elk Field Service for application specifications over other decks and other slopes.

MATERIALS: Underlayment for standard roof slopes, 4" per foot (101.6/304.8mm) or greater: apply non-perforated No. 15 or 30 asphalt-saturated felt underlayment. For low slopes [4" per foot (101.6/304.8mm) to a minimum of 2" per foot (50.8/304.8mm)], use two plies of underlayment overlapped a minimum of 19". Fasteners shall be of sufficient length and holding power for securing material as required by the application instructions printed on shingle wrapper.

For areas where algae is a problem, shingles shall be (name) with StainGuard treatment, as manufactured by the Elk Tuscaloosa plant. Hip and ridge type to be Seal-A-Ridge with formula *FLX* with StainGuard treatment.

Complete application instructions are published by Elk and printed on the back of every shingle bundle. All warranties are contingent upon the correct installation as shown on the instructions. These instructions are the minimum required to meet Elk application requirements. In some areas, building codes may require additional application techniques or methods beyond our instructions. In these cases, the local code must be followed. Under no circumstances will Elk accept application requirements less than those contained in its application instructions.

For specifications in CSI format, call 800.354.SPEC (7732) or e-mail specinfo@elkcorp.com.

SOUTHEAST & ATLANTIC OFFICE: 800.945.5551

CORPORATE HEADQUARTERS: 800.354.7732

PLANT LOCATION: 800.945.5545

ELK
www.elkcorp.com

TUSCALOOSA, AL

DIRECTIONS FOR APPLICATION

Please read carefully. Failure to follow these instructions may void the product warranty.
See specific application instructions for Prestique® Plus and Prestique Gallery Collection™ 110 MPH, and Prestique I 90 MPH limited wind warranty requirements.

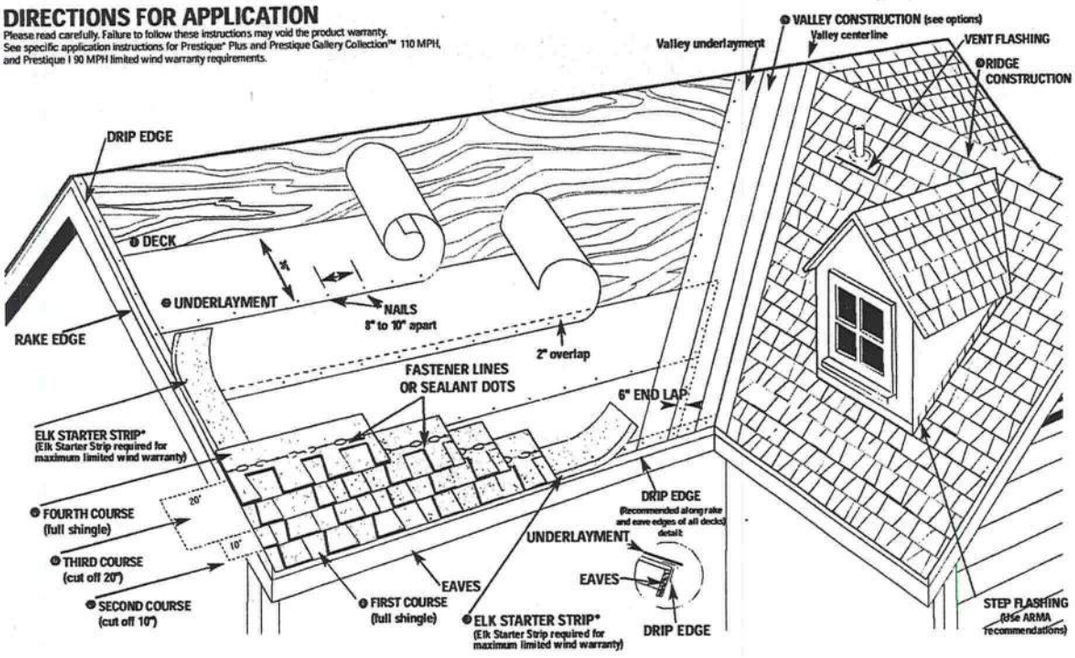

⑤ **VALLEY CONSTRUCTION OPTION** (California Open and California Closed are also acceptable) NOTE: For complete ARMA valley installation details, see ARMA Residential Asphalt Roofing Manual.

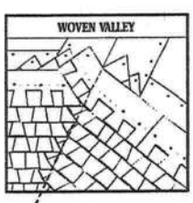

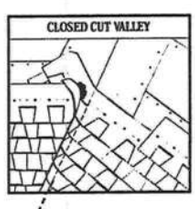

DIRECTIONS FOR APPLICATION

These application instructions are the minimum required to meet Elk's application requirements. Your failure to follow these instructions may void the product warranty. In some areas, the building codes may require additional application techniques or methods beyond our instructions. In these cases, the local code must be followed. Under no circumstances will Elk accept application requirements that are less than those printed here. Shingles should not be jammed tightly together. All attics should be properly ventilated. Note: It is not necessary to remove tape on back of shingle.

① DECK PREPARATION

Roof decks should be dry, well-seasoned 1" x 6" boards or exterior grade plywood minimum 3/8" thick and conform to the specifications of the American Plywood Association or 7/16" oriented strandboard, or 7/16" chipboard.

② UNDERLAYMENT

Apply underlayment (Non-Perforated No. 15 or 30 asphalt saturated felt). Cover drip edge at eaves only.

For low slope (2/12 up to 4/12), completely cover the deck with two plies of underlayment overlapping a minimum of 19". Begin by fastening a 19" wide strip of underlayment placed along the eaves. Place a full 36" wide sheet over the starter, horizontally placed along the eaves and completely overlapping the starter strip.

EAVE FLASHING FOR ICE DAMS (ASK A ROOFING CONTRACTOR, REFER TO ARMA MANUAL OR CHECK LOCAL CODES)

For standard slope (4/12 to less than 21/12), use coated roll roofing of no less than 50 pounds over the felt underlayment extending from the eave edge to a point at least 24" beyond the inside wall of the living space below or one layer of a self-adhered eave and flashing membrane.

For low slope (2/12 up to 4/12), use a continuous layer of asphalt plastic cement between the two plies of underlayment from the eave edge up roof to a point at least 24" beyond the inside wall of the living space below or one layer of a self-adhered eave and flashing membrane.

Consult the Elk Field Service Department for application specifications over other decks and other slopes.

③ STARTER SHINGLE COURSE

USE AN ELK STARTER STRIP OR A STRIP SHINGLE INVERTED WITH THE HEADLAP APPLIED AT THE EAVE EDGE. With at least 4" trimmed from the end of the first shingle, start at the rake edge overhanging the eave 1/2" to 3/4". Fasten 2" from the lower edge and 1" from each side. Shingles may be applied with a course alignment of 45° on the roof.

④ FIRST COURSE

Start at rake and continue course with full shingles laid flush with the starter course.

⑤ SECOND COURSE

Start at the rake with the shingle having 10" trimmed off and continue across roof with full shingles.

⑥ THIRD COURSE

Start at the rake with the shingle having 20" trimmed off and continue across roof with full shingles.

⑥ FOURTH COURSE

Start at the rake and continue with full shingles across roof.

FIFTH AND SUCCEEDING COURSES.

Repeat application as shown for second, third, and fourth courses. Do not rack shingles straight up the roof.

⑤ VALLEY CONSTRUCTION

Open, woven and closed cut valleys are acceptable when applied by Asphalt Roofing Manufacturing Association (ARMA) recommended procedures. For metal valleys, use 36" wide vertical underlayment prior to applying 18" metal flashing (secure edge with nails). No nails are to be within 6" of valley center.

⑦ RIDGE CONSTRUCTION

For ridge construction use Class "A" Seal-A-Ridge® with formula *FLX*™ (See ridge package for installation instructions.)

FASTENERS

While nailing is the preferred method for Elk shingles, Elk will accept fastening methods according to the following instructions.

Always nail or staple through the fastener line or on products without fastener lines, nail or staple between and in line with sealant dots.

NAILS: Corrosive resistant, 3/8" head, minimum 12-gauge roofing nails. Elk recommends 1-1/4" for new roofs and 1-1/2" for roof-overs. In cases where you are applying shingles to a roof that has an exposed overhang, for new roofs only, 3/4" ring shank nails are allowed to be used from the eave's edge to a point up the roof that is past the outside wall line. 1" ring shank nails allowed for re-roof.

STAPLES: Corrosive resistant, 16-gauge minimum, crown width minimum of 15/16". Note: An improperly adjusted staple gun can result in raised staples that can cause a fish-mouthed appearance and can prevent sealing.

Fasteners should be long enough to obtain 3/4" deck penetration or penetration through deck, whichever is less.

MANSARD APPLICATIONS

Correct fastening is critical to the performance of the roof. For slopes exceeding 60° (or 21/12) use six fasteners per shingle. Locate fasteners in the fastener area 1" from each side edge with the remaining four fasteners equally spaced along the length of the double thickness (laminated) area. Only fastening methods according to the above instructions are acceptable.

LIMITED WIND WARRANTY

- For a Limited Wind Warranty, all Prestique and Raised Profile™ shingles must be applied with 4 properly placed fasteners, or in the case of mansard applications, 6 properly placed fasteners per shingle.
- For a Limited Wind Warranty up to 110 MPH for Prestique Gallery Collection or Prestique Plus or 90 MPH for Prestique I, shingles must be applied with 6 properly placed NAILS per shingle. SHINGLES APPLIED WITH STAPLES WILL NOT QUALIFY FOR THIS ENHANCED LIMITED WIND WARRANTY. Also, Elk Starter Strip shingles must be applied at the eaves and rake edges to qualify Prestique Plus, Prestique Gallery Collection and Prestique I shingles for this enhanced Limited Wind Warranty. Under no circumstances should the Elk Shingles or the Elk Starter Strip overhang the eaves or rake edge more than 3/4 of an inch.

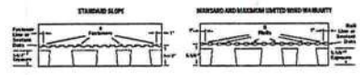

HELP STOP BLOW-OFFS AND CALL-BACKS

A minimum of four fasteners must be driven into the DOUBLE THICKNESS (laminated) area of the shingle. Nails or staples must be placed along – and through – the "fastener line" or on products without fastener lines, nail or staple between and in line with sealant dots. CAUTION: Do not use fastener line for shingle alignment.

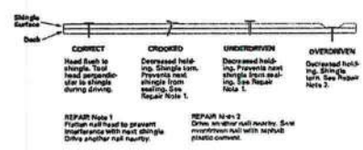

Refer to local codes which in some areas may require specific application techniques beyond those Elk has specified.

All Prestique and Raised Profile shingles have a U.L.® Wind Resistance Rating when applied in accordance with these instructions using nails or staples on re-roofs as well as new construction.

CAUTION TO WHOLESALER: Careless and improper storage or handling can harm fiberglass shingles. Keep these shingles completely covered, dry, reasonably cool, and protected from the weather. Do not store near various sources of heat. Do not store in direct sunlight until applied. DO NOT DOUBLE STACK. Systematically rotate all stock so that the material that has been stored the longest will be the first to be moved out.

ELK®

www.elkcorp.com

333 Pfingsten Road
Northbrook, Illinois 60062-2096
United States Country Code (1)
(847) 272-8800
FAX No. (847) 272-8129
http://www.ul.com

Underwriters Laboratories Inc.®

March 4, 2002

GAF Materials Corporation
Mr Randall Ziegler
1361 Alps Road
Wayne, NJ 07470

Our Reference: R21

Subject: UL Listed products

Dear Mr Ziegler:

This is is response to your request to identify some of the products that are curently Listed with Underwriters Laboratories relating to various Standards. Following are those products:

Royal Sovereign®
Marquis®/Marquis® WeatherMax®
SLATELINE®
Grand canyon™
Grand Sequoia®
Country Mansion™
Country Estates™
Timberline 30™
Timberline Select™ 40
Timberline Ultra™
Sentinel®
The above products have been tested to ASTM D3462, Class A UL790/ASTM E108 and UL 997/ ASTM D3161(secured with 4 nails)with velocities up to 110 mph and have successfully met those test criteria.

If you have any questions please feel free to contact the writer.

Very truly yours,

Roger Anderson (Ext. 43283)
Senior Engineering Associate
Conformity Assessment Services- 3011E-NBK

Reviewed by,

Douglas C. Miller (Ext. 43262)
Engineering Group Leader
Conformity Assessment Services- 3011E-NBK

** TOTAL PAGE.01 **

GAF®
GAF MATERIALS CORPORATION

MARQUIS® WeatherMax® SHINGLES

ROYAL SOVEREIGN® SHINGLES

SENTINEL® SHINGLES

APPLICATION INSTRUCTIONS

Note: These shingles must be nailed a nominal 5 5/8" (143mm) from bottom of shingles, not in or above self seal, as shown. Nails should remain unexposed.

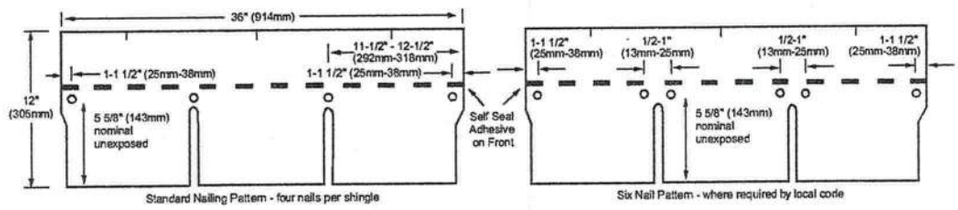

Standard Nailing Pattern - four nails per shingle

Six Nail Pattern - where required by local code

GENERAL INSTRUCTIONS

• **ROOF DECKS:** For use on new or reroofing work over well-seasoned, supported wood deck, tightly-constructed with maximum 6" (152mm) wide lumber, having adequate nail-holding capacity and smooth surface. Plywood decking as recommended by The Engineered Wood Assn. is acceptable. Plywood decks for Class A installations must be 3/8" (10mm) thick or greater with underlayments as noted below. Shingles must **not** be fastened directly to insulation or insulated deck unless authorized in writing by GAF Materials Corporation. Roof decks and existing surfacing material must be **dry** prior to application of shingles.

• **UNDERLAYMENT:** Underlayment is required on new construction and required for reroofing when old roof is removed from the deck. Use only "breather type" material like GAF Materials Corporation Shingle-Mate® Underlayment or equivalent. Underlayments must be installed flat, without wrinkles.

• **FASTENERS:** Use of nails is recommended. (Staple specifications and application instructions are available from GAF Materials Corporation, Contractor Services Dept., 1361 Alps Road, Wayne, NJ 07470.) Use only zinc coated steel or aluminum, 10-12 gauge, barbed, deformed or smooth shank roofing nails with heads 3/8" (10mm) to 7/16" (12mm) in diameter. Fasteners should be long enough to penetrate at least 3/4" (19mm) into wood decks or just through the plywood decks. Fasteners must be driven flush with the surface of the shingle. Over driving will damage the shingle. Raised fasteners will interfere with the sealing of the shingles. For normal installation, four fasteners must be installed per shingle, a nominal 5 5/8" (143mm) up from the bottom of the shingle. Fasteners must be installed approximately 1"- 1 1/2" (25-38mm) and 11 1/2"- 12 1/2" (292-318mm) from each side.

• **WIND RESISTANT:** These shingles have a special thermal sealant that firmly bonds the shingles together after application when exposed to sun and warm temperatures. Shingles installed in Fall or Winter may not seal until the following Spring. If shingles are damaged by winds before sealing or are not exposed to adequate surface temperatures, or if the self-sealant gets dirty, the shingles may never seal. Failure to seal under these circumstances results from the nature of self-sealing shingles and is not a manufacturing defect. To insure immediate sealing, apply 2 quarter-sized dabs of shingle tab adhesive on the back of each tab, approximately 1" (25mm) from end and 1" (25mm) up from bottom of each tab corner. The shingle must be pressed firmly into the adhesive.

NOTE: Application of excess tab adhesive can cause blistering of the shingle.

For maximum wind resistance along rakes, cement shingles to underlayment and each other in a 4" (102mm) width of asphalt plastic roof cement.

NOTE: The film strips on the back of each shingle are to prevent sticking together of the shingles while in the bundle. Their removal is NOT required during application.

• **CANADIAN COLD WEATHER APPLICATIONS:** CSA A123.5-M90 mandates that shingles applied between September 1 and April 30 shall be adhered with a compatible field-applied adhesive. See Wind Resistant for GAF Materials Corporation's recommendations for the application of that adhesive.

• **MANSARD AND STEEP SLOPE APPLICATIONS:** For roof slopes greater than 21" (1750mm/m) per foot (do NOT use on vertical side walls), shingle sealing must be enhanced by hand sealing. After fastening the shingle in place, apply 2 quarter-sized dabs of shingle tab adhesive as indicated in Wind Resistant above. The shingle must be pressed firmly into the adhesive.

• **EXPOSURE:** 5" (127mm)

• **THROUGH VENTILATION:** All roof structures must be provided with through ventilation to prevent entrapment of moisture laden air behind roof sheathing. Ventilation provisions must at least meet or exceed current F.H.A., H.U.D. or local code minimum requirements.

• **NON-CORRODING METAL DRIP EDGES:** Recommended along rake and eave edges on all decks, especially plywood decks.

• **ASPHALT PLASTIC CEMENT:** For use as shingle tab adhesive. Must conform to ASTM D4586 Type I or II.

1 Underlayment: Standard Slope–4/12 (333mm/m) or more

Application of underlayment: Cover deck with one layer of underlayment installed without wrinkles. Use only enough nails to hold underlayment in place until covered by shingles.

Application of eave flashing: Install eave flashing such as GAF Materials Corporation Weather Watch® or StormGuard® Leak Barrier in localities where leaks may be caused by water backing up behind ice or debris dams. Eave flashing must overhang the roof edge by 3/8" (10mm) and extend 24" (610mm) beyond the inside wall line.

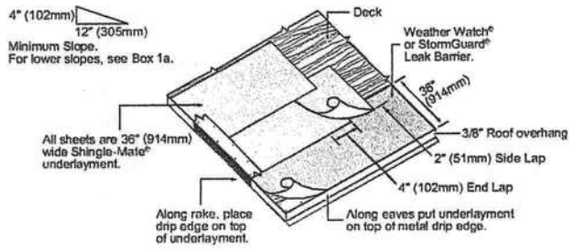

1a Underlayment: Low Slope 2/12-4/12 (167mm-333mm/m)

Application of underlayment and eave flashing: Completely cover the deck with two layers of underlayment as shown. Use only enough nails to hold underlayment in place until covered by shingles. Use blind nailing for eave flashings. At eaves and where ice dams can be expected, use one layer of GAF Materials Corporation Weather Watch® or StormGuard® Leak Barrier. Eave flashing must overhang the roof edge by 3/8" (10mm) and extend 24" (610mm) beyond the inside wall line. Where ice dams or debris dams are not expected, install 2 plies of Shingle-Mate® underlayment.

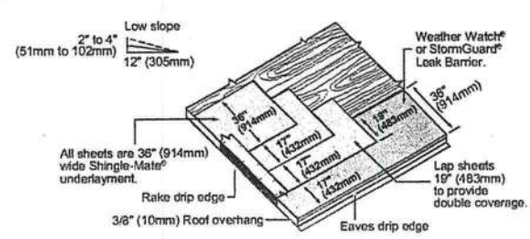

2 Starter Course

Use of any GAF MC 3-tab Shingle is recommended. Apply as shown.

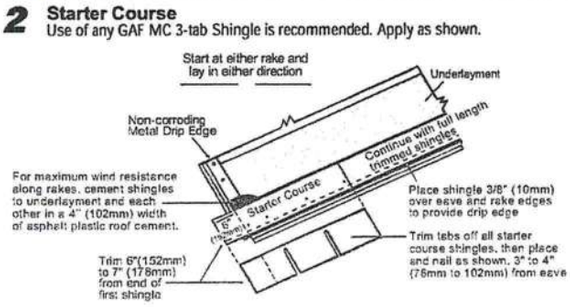

3 First Course

Start and continue with full shingles laid flush with the starter course. Shingles may be laid from left to right or right to left. DO NOT lay shingles straight up the roof since this procedure can cause an incorrect color blend on the roof and may damage the shingles.

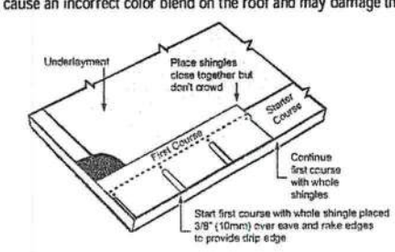

4 Second Course

Start and continue second course and all even numbered courses as shown. Position the shingle on the top of the cutouts of the underlying shingle so that there will be 5" (127mm) of each shingle exposed. Strike a chalk line about every 6 courses to check parallel alignment with eaves. Factory applied self-sealing dots on lower courses are designed to seal down the shingle tabs in an upper course.

NOTE: Shingles may be laid from either left or right hand side. Start at either rake edge with shingles having 6" (152mm) trimmed from rake.

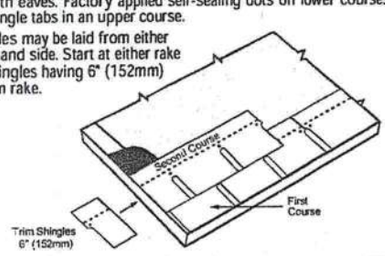

5 Hip and Ridge

Use GAF hip & ridge shingles, or cut hip & ridge shingles from these full shingles, and apply as shown. Position laps away from prevailing wind direction.

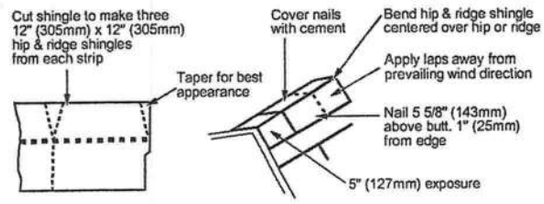

6 Wall Flashing (Sloped Roof to Vertical Wall)

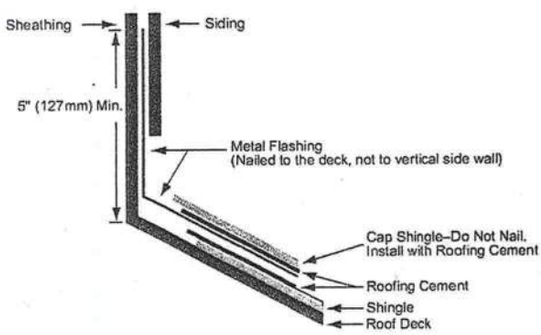

7 Chimney Flashing

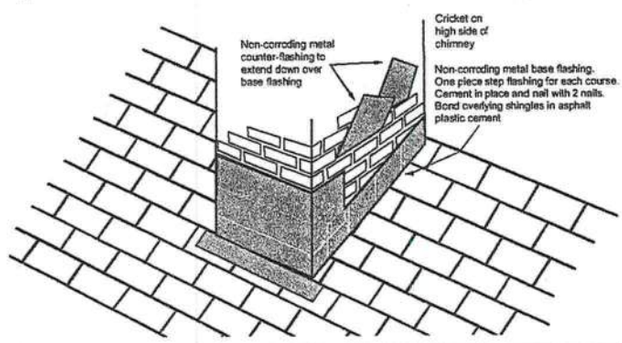

8 Valley Construction - Closed or Woven Valley

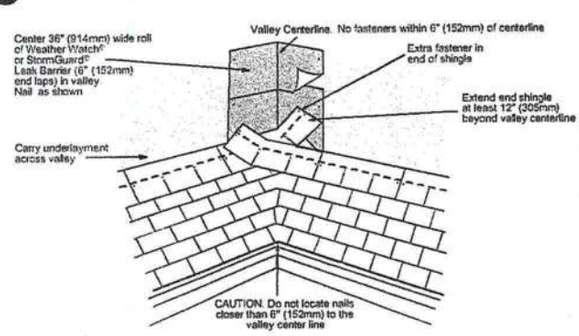

9 Valley Construction–Open Cut

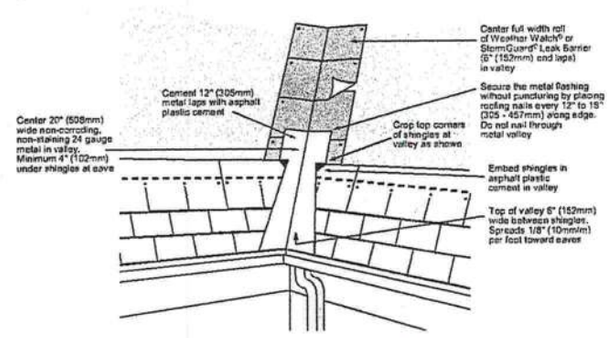

10 Valley Construction–Closed Cut

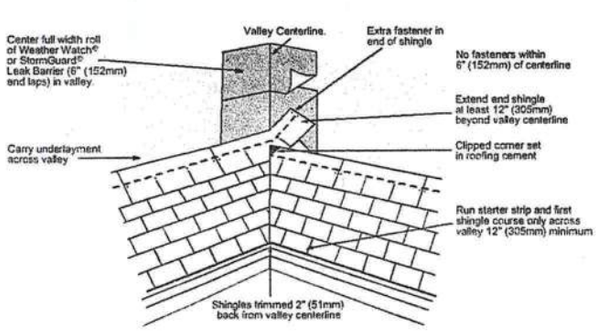

Precautionary Notes

These shingles are fiberglass, self-sealing asphalt shingles. Because of the natural characteristics of the high quality waterproofing material used, these shingles will be stiff in cold weather and flexible in hot weather.

1. Bundles should not be dropped on edge nor should attempt be made to separate shingles by "breaking" over ridge or other bundles.
2. Handle carefully. Shingles can easily be broken in cold weather or their edges damaged in hot weather.
3. All exposed materials must be of Class A type.
4. Storage should be in a covered, ventilated area–maximum temperature 110°F (43°C.) Store on flat surface and use weight equalization boards if pallets are to be double stacked. Shingles must be protected from weather when stored at job site. Do not store near steam pipes, radiators, etc., or in sunlight. All rolled product must be stored on ends.
5. If shingles are to be applied during PROLONGED COLD periods or in areas where airborne dust or sand can be expected before sealing occurs, the shingles MUST be hand sealed. See Wind Resistant instructions.

Re-Roofing

If old asphalt shingles are to remain in place, nail down or cut away all loose, curled or lifted shingles; replace with new; and just before applying the new roofing, sweep the surface clean of all loose debris. Since any irregularities may show through the new shingles, be sure the underlying shingles provide a smooth surface. Fasteners must be of sufficient length to penetrate the wood deck at least 3/4" (19mm) or just through plywood. Follow other above instructions for application. *Note*: Shingles can be applied over wood shingles when precautions have been taken to provide an acceptable smooth surface. This includes cutting back old shingles at eaves and rakes and installing new wood edging strips as needed. Make surface smooth and use beveled wood strips if necessary. Install #30 underlayment to maintain Class A rating.

GAF®

GAF MATERIALS CORPORATION

TIMBERLINE® Ultra® SHINGLES

TIMBERLINE® 40 SELECT SHINGLES

TIMBERLINE® 30 SHINGLES

APPLICATION INSTRUCTIONS

Timberline® Series shingles come in either 36" (914mm) or 36-15/16" (938mm) lengths, depending on shingle brand. Application instructions apply to both.

These shingles must be nailed a nominal 5-5/8" (143mm) from bottom of shingles, as shown, to allow for penetration through the double ply area just above the tabs. Nails should remain unexposed.

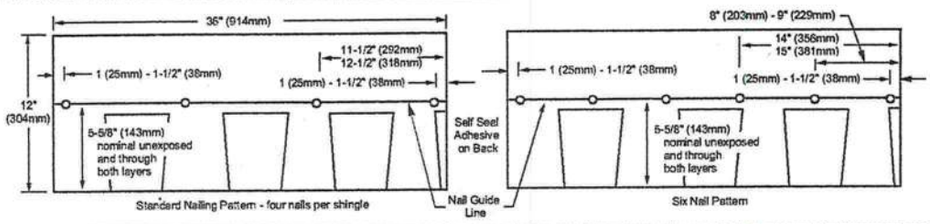

GENERAL INSTRUCTIONS

• **ROOF DECKS:** For use on new or reroofing work over well-seasoned, supported wood deck, tightly-constructed with maximum 6" (152mm) wide lumber, having adequate nail-holding capacity and smooth surface. Plywood decking as recommended by The Engineered Wood Assn. is acceptable. Plywood decks for Class A installations must be 3/8" (10mm) thick or greater with underlayments as noted below. Shingles must **not** be fastened directly to insulation or insulated deck unless authorized in writing by GAF Materials Corporation. Roof decks and existing surfacing material must be **dry** prior to application of shingles.

• **UNDERLAYMENT:** Underlayment beneath shingles has many benefits, including preventing wind driven rain from reaching the interior of the building and preventing sap in some wood decking from reacting with asphalt shingles. Underlayment is also required by many code bodies. Consult your local building department for its requirements. Where an underlayment is to be installed, a breather-type underlayment such as GAFMC's Shingle-Mate® underlayment is recommended. Underlayment must be installed flat, without wrinkles.

• **FASTENERS:** Use of nails is recommended. (Staple specifications and application instructions are available from GAF Materials Corporation, Contractor Services Dept., 1361 Alps Road, Wayne, NJ 07470.) Use only zinc coated steel or aluminum, 10-12 gauge, barbed, deformed or smooth shank roofing nails with heads 3/8" (10mm) to 7/16" (12mm) in diameter. Fasteners should be long enough to penetrate at least 3/4" (19mm) into wood decks or just through the plywood decks. Fasteners must be driven flush with the surface of the shingle. Over driving will damage the shingle. Raised fasteners will interfere with the sealing of the shingles. For normal installation, four fasteners must be installed per shingle, a nominal 5-5/8" (143mm) up from the bottom of the shingle, to penetrate both layers of the shingle. Fasteners must be installed approximately 1"- 1 1/2" (25-38mm) and 11-1/2"-12-1/2" (292-318mm) from each side.

• **WIND RESISTANT:** These shingles have a special thermal sealant that firmly bonds the shingles together after application when exposed to sun and warm temperatures. Shingles installed in Fall or Winter may not seal until the following Spring. If shingles are damaged by winds before sealing or are not exposed to adequate surface temperatures, or if the self-sealant gets dirty, the shingles may never seal. Failure to seal under these circumstances results from the nature of self-sealing shingles and is not a manufacturing defect. To insure immediate sealing, apply 4 quarter-sized dabs of shingle tab adhesive on the back of the shingle 1" (25mm) and 13" (330mm) in from each side and 1" (25mm) up from bottom of the shingle. The shingle must be pressed firmly into the adhesive.

NOTE: Application of excess tab adhesive can cause blistering of the shingle.

For maximum wind resistance along rakes, cement shingles to underlayment and each other in a 4" (102mm) width of asphalt plastic roof cement.

NOTE: The film strips on the back of each shingle are to prevent sticking together of the shingles while in the bundle. Their removal is NOT required during application.

• **CANADIAN COLD WEATHER APPLICATIONS:** CSA 123.5-M90 mandates that shingles applied between September 1 and April 30 shall be adhered with a compatible field-applied adhesive. See Wind Resistant for GAF Materials Corporation's recommendations for the application of that adhesive.

• **MANSARD AND STEEP SLOPE APPLICATIONS:** For roof slopes greater than 21" (1750mm/m) per foot (do NOT use on vertical side walls), shingle sealing must be enhanced by hand sealing. After fastening the shingle in place, apply 4 quarter-sized dabs of shingle tab adhesive as indicated in Wind Resistant above. The shingle must be pressed firmly into the adhesive.

• **EXPOSURE:** 5" (127mm)

• **THROUGH VENTILATION:** All roof structures must be provided with through ventilation to prevent entrapment of moisture laden air behind roof sheathing. Ventilation provisions must at least meet or exceed current F.H.A., H.U.D. or local code minimum requirements.

• **NON-CORRODING METAL DRIP EDGES:** Recommended along rake and eave edges on all decks, especially plywood decks.

• **ASPHALT PLASTIC CEMENT:** For use as shingle tab adhesive. Must conform to ASTM D4586 Type I or II.

1 Underlayment: Standard Slope–4/12 (333mm/m) or more

Application of underlayment: Cover deck with one layer of underlayment installed without wrinkles. Use only enough nails to hold underlayment in place until covered by shingles.

Application of eave flashing: Install eave flashing such as GAF Materials Corporation Weather Watch® or StormGuard® Leak Barrier in localities where leaks may be caused by water backing up behind ice or debris dams. Eave flashing must overhang the roof edge by 3/8" (10mm) and extend 24" (610mm) beyond the inside wall line.

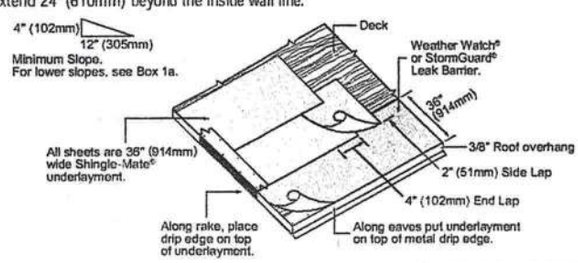

1a Underlayment: Low Slope 2/12-4/12 (167mm-333mm/m)

Application of underlayment and eave flashing: Completely cover the deck with two layers of underlayment as shown. Use only enough nails to hold underlayment in place until covered by shingles. Use blind nailing for eave flashings. At eaves and where ice dams can be expected, use one layer of GAF Materials Corporation Weather Watch® or StormGuard® Leak Barrier. Eave flashing must overhang the roof edge by 3/8" (10mm) and extend 24" (610mm) beyond the inside wall line. Where ice dams or debris dams are not expected, install 2 plies of Shingle-Mate® underlayment.

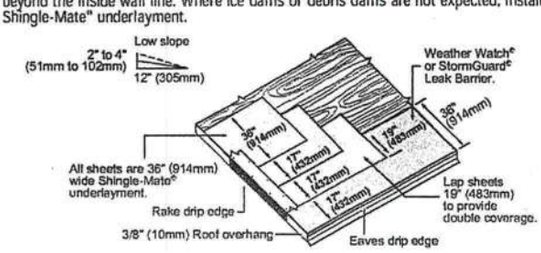

2 Starter Course

Apply as shown.

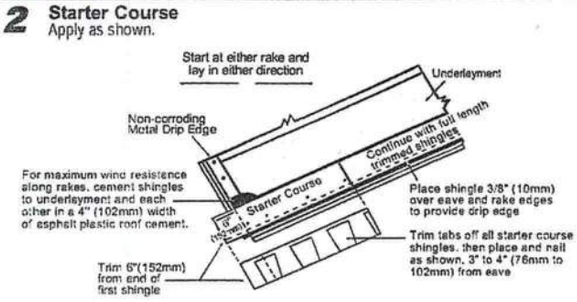

3 First Course

Start and continue with full shingles laid flush with the starter course. Shingles may be laid from left to right or right to left. DO NOT lay shingles straight up the roof since this procedure can cause an incorrect color blend on the roof and may damage the shingles.

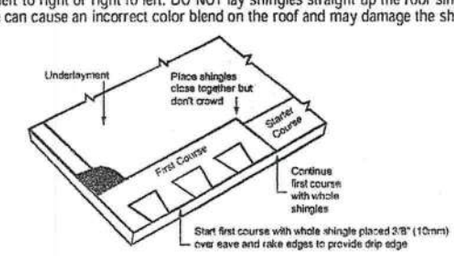

4 Second Course

Start and continue second course as shown. Trim 6" (152mm) from the end of the shingle. Position the shingles in the second and subsequent courses flush with the tops of the wide cutouts. This results in a 5" (127mm) exposure. Continue with full width shingles across the roof. Strike a chalk line about every 6 courses to check parallel alignment with eaves. NOTE: Shingles may be laid from either left or right hand side. Start at either rake edge with shingles having 6" (152mm) trimmed from rake.

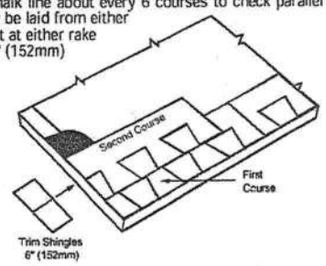

5 Third Course

Trim 11" (279mm) from the first shingle in the course then continue with full shingles across the roof.

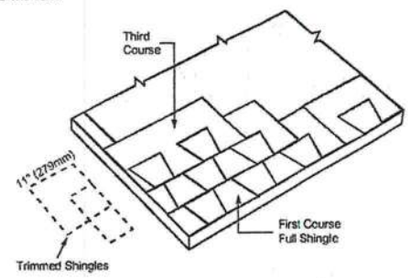

6 Fourth Course and Remaining Courses

Trim 17" (432 mm) from first shingle in the course, then continue with full shingles across the roof. Fifth and subsequent courses repeat full shingle instructions from Step 3.

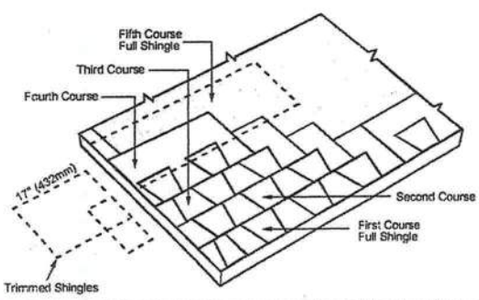

7 Hip and Ridge

For single layer application, use hip and ridge shingles and apply as shown. To enhance appearance, use GAF TIMBERTEX® or a double layer application of Universal Hip & Ridge. (One bundle of TIMBERTEX® Hip & Ridge covers 20 lineal ft.–6.1 meters.) For double application, start with triple thickness of precut Hip & Ridge shingles and continue remainder with double thickness. Fasten in same manner as single application shown. Apply laps away from prevailing wind direction.

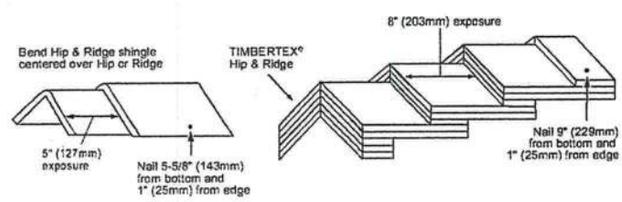

8 Wall Flashing (Sloped Roof to Vertical Wall)

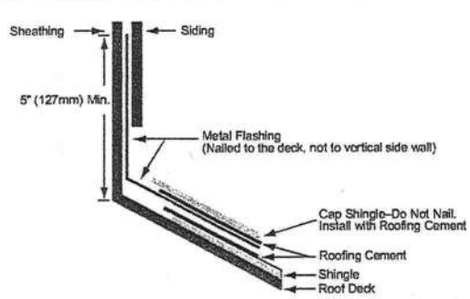

9 Chimney Flashing

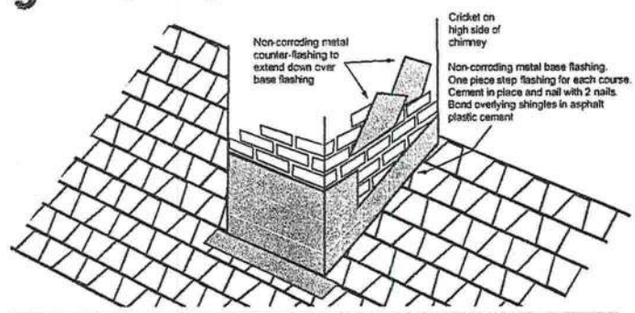

10 Valley Construction–Closed Cut

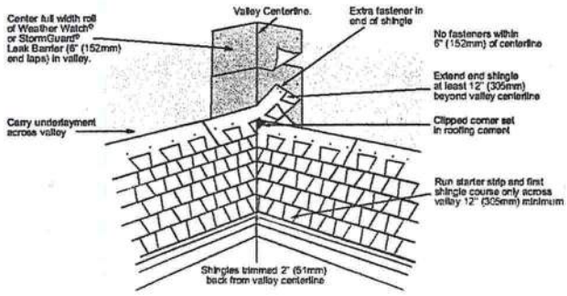

11 Valley Construction–Open

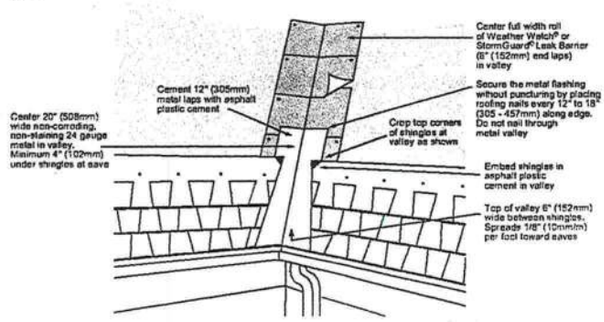

Precautionary Notes

Timberline® Series shingles are fiberglass, self-sealing asphalt shingles. Because of the natural characteristics of the high quality waterproofing material used, these shingles will be stiff in cold weather and flexible in hot weather.

1. Bundles should not be dropped on edge nor should attempt be made to separate shingles by "breaking" over ridge or other bundles.
2. Handle carefully. Shingles can easily be broken in cold weather or their edges damaged in hot weather.
3. All exposed materials must be of Class A type.
4. Storage should be in a covered, ventilated area–maximum temperature 110°F (43°C.) Store on flat surface and use weight equalization boards if pallets are to be double stacked. Shingles must be protected from weather when stored at job site. Do not store near steam pipes, radiators, etc., or in sunlight. All rolled product must be stored on ends.
5. If shingles are to be applied during PROLONGED COLD periods or in areas where airborne dust or sand can be expected before sealing occurs, the shingles MUST be hand sealed. See Wind Resistant instructions.

Re-Roofing

If old asphalt shingles are to remain in place, nail down or cut away all loose, curled or lifted shingles; replace with new; and just before applying the new roofing, sweep the surface clean of all loose debris. Since any irregularities may show through the new shingles, be sure the underlying shingles provide a smooth surface. Fasteners must be of sufficient length to penetrate the wood deck at least 3/4" (19mm) or just through plywood. Follow other above instructions for application.

Note: Shingles can be applied over wood shingles when precautions have been taken to provide an acceptable smooth surface. This includes cutting back old shingles at eaves and rakes and installing new wood edging strips as needed. Make surface smooth and use beveled wood strips if necessary. Install #30 underlayment to maintain Class A rating.

This product is sold with an express LIMITED WARRANTY only. A copy of the LIMITED WARRANTY stating its terms and restrictions is printed on the product wrapper or may be obtained from the distributor of this product or directly from GAF Materials Corporation. Any deviation from printed instructions shall be the responsibility of applicator and/or specifier.

CERTIFIED TESTING LABORATORIES

Architectural Division • 7252 Narcoossee Rd. • Orlando, Fl. 32822
(407) 384-7744 • Fax (407) 384-7751
Web Site: www.ctlarch.com
E-mail: ctlarch.com

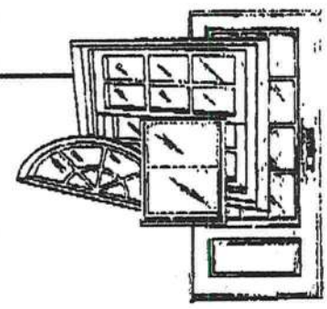

Report Number: CTLA-991W-1-AWT
Report Date: February 18, 2003

STRUCTURAL PERFORMANCE TEST REPORT

Client: ACTION WINDOOR TECHNOLOGY INC
1312 W. CROSBY ROAD
CARROLLTON, TX 75006

Product Type and Series: **AWT Series 3950 Vinyl Fin Frame Single Hung Window with Reinforced Sash Top Rail, Stiles & Meeting Rail H-R40 (36"x 72")**

Test Specifications: AAMA/NWWDA 101/I.S.2-97 "Voluntary Specifications for Aluminum, Vinyl (PVC) and Wood Windows and Glass Doors"

Frame: Vinyl Fin frame measured 35.50" wide x 71.50" high overall. Mitered corner weld construction. Fixed meeting rail secured to each frame jamb with one (1) #8 x 2" PH., PH. screw.

Ventilator: Operable sash measured 33.375" wide x 35.25" high overall. Mitered corner weld construction. Clear lite measured 31.5625" high x 33.5625" high. Fixed lite measured 32.50" wide x 33.4375"high.

Weather Stripping: One (1) strip of woolpile .220" high with integral plastic fin frame sill. One (1) strip of woolpile .250" high with integral plastic fin sash top rail exterior. One (1) strip of woolpile .250" high each sash stile exterior leg. One (1) strip of woolpile .250" high with integral plastic fin each sash stile interior leg. One (1) strip of foam filled bulb weatherstrip sash bottom rail.

Hardware & Location: Two (2) metallic sweep locks located on sash top rail approx 8" from each end of rail. Two (2) metallic keepers located on fixed meeting rail. One (1) tilt latch at each end of sash top rail. One (1) block and tackle at each frame jamb. One (1) pivot bar at each end of sash bottom rail.

Glazing: 5/8" insulated annealed glass consisting of .125" glass .375" air space with swiggle .125" glass. Sash exterior glazed. Fixed lite interior glazed adhesive foam strip backbedding and vinyl snap in glazing bead.

Sealant: A silicone type sealant was used on sill and to seal specimen to test buck.

Weep System: Weep notch measuring 2.25" x leg height located each end of sill weeping to the exterior

Muntins: N/A

Reinforcement: Fixed meeting rail has one (1) piece of extruded aluminum reinforcement measuring .662" wide x .755" high x .099" thick x full length. Top rail, and sash stiles has one (1) piece of extruded aluminum reinforcement measuring .590" wide x .995" high x .115" thick x full length.

Additional Description: N/A

Screen: Roll formed aluminum frame, fiberglass mesh with vinyl spline. Two (2) metallic retainer clips and two (2) metallic plungers. Corners secured with plastic corner keys

Installation: Twenty-six (26) 1.75" roofing nails were used to secure the specimen to the wood test buck. Five (5) were located in head and sill measuring 4", 13", 21", 29", and 33" from left jamb. Eight (8) were located in each jamb measuring 4.50", 14.25", 24", 32.75", 42", 57.25", 60.50" and 70" from sill.

Surface Finish: White Vinyl

Comment: Nominal 2 mil polyethylene film was used to seal against air leakage during structural loads. The film was used in a manner that did not influence the test results.

Performance Test Results

Paragraph No	Title of Test	Method	Measured	Allowed
2.1.2	Air Infiltration @1.57 psf	ASTM E283-91	.18 cfm/ft²	.34 cfm/ft²
	The tested specimen meets or exceeds the performance levels specified in AAMA/NWWDA 101/I.S.2-97. Results recorded in two (2) decimals at the clients request. Unit tested with shims installed under cam locks.			
2.1.3	Water Resistance @ 5.0 gph/ft²	ASTM E547-93 Four (4) five (5) minute cycles	No Entry	No Entry
	WTP= 6.75 psf	ASTM E331-93 Fifteen (15) minute duration	No Entry	No Entry
	Unit tested with insect screen.			
2.1.3	Water Resistance @ 5.0 gph/ft²	ASTM E547-93 Four (4) five (5) minute cycles	No Entry	No Entry
	WTP= 6 psf	ASTM E331-93 Fifteen (15) minute duration	No Entry	No Entry
	Unit tested without insect screen.			
2.1.4.2	Uniform Load Structural Permanent Deformation	ASTM E330-90 Ten (10) second load		
	@ 60 psf positive		.015"	.134"
	@ 60 psf negative		.005"	.134"
2.1.8	Forced Entry Resistance	AAMA 1302.5-76		
	Test A		0"	½"
	Test B		0"	½"
	Test C		0"	½"
	Test D, E and F		0"	½"
	Test G		0"	½"

Performance Test Results (continued)

Paragraph No	Title of Test		Method	Measured	Allowed
2.2.2.5.1	Operating Force Sash		AAMA/NWWDA 101/I.S.2-97	18 lbs.	30 lbs.
2.2.2.5.2	Deglazing		ASTM E987-88		
	Top Rail	70 lbs		.039" = 7.8%<100%	
	Bottom Rail	70 lbs.		.038" = 7.6%<100%	
	Left Side	50 lbs.		.050" = 10%<100%	
	Right Side	50 lbs.		.035" = 7.0%<100%	
2.1.7	Welded Corner Test		AAMA/NWWDA 101/ IS2-97	Passed	

Test Date November 21, 2002

Test Completion Date: November 21, 2002

Remarks: Detailed drawings were available for laboratory records and comparison to the test specimen at the time of this report. A copy of this report along with representative sections of the test specimen will be retained by CTL for a period of four (4) years. The results obtained apply only to the specimen tested.

This test report does not constitute certification of this product, but only that the above test results were obtained using the designated test methods and they indicate compliance with the performance requirements (paragraphs as listed) of the above referenced specifications.

Certified Testing Laboratories assumes that all information provided by the client is accurate and that the physical and chemical properties of the components are as stated by the manufacturer.

Certified Testing Laboratories, Inc.

James W. Blakely
Vice President
Architectural Division

cc: Action Windoor Technology Inc. (3)
File (1)

Report Number: ETC-04-034-14644.0
Test Start Date: 04/10/03
Test Finish Date: 03/16/04
Report Date: 03/18/04
Expiration Date: 03/18/08

Fenestration Structural Test Report

Rendered To:

Vinyl Building Products, Inc.
One Raritan Road
Oakland, NJ 07436

Series/Model

2900 Horizontal Slider (OX)

Description: The product tested was a vinyl Horizontal Sliding window. The test specimen was glazed with 5/8-inch thick insulating glass units constructed with double strength annealed glass. The frame size was 69 inches wide by 48 inches high by 2-3/4 inches deep. See Appendix A.

Test Specification: ANSI/AAMA/NWWDA 101/I.S.2

Summary of Results

Overall Design Pressure	35.0 psf
Air Leakage Rate	0.18 scfm/ft^2
Maximum Water Pressure Achieved	5.25 psf
Maximum Structural Pressure Achieved	60.0 psf
Forced Entry Resistance - (ASTM)	Grade 10
Product Designation	**H–R35 69 x 48**

TEST REPORT

ETC Laboratories

Specifications: The test specimen was evaluated in accordance with ANSI/AAMA/NWWDA 101/I.S.2 "Voluntary Specification for Aluminum, Vinyl and Wood Windows and Glass Doors". Sections 1, 2 and 4 only. All performance specifications in this standard shall be met for full compliance to the standard and for product certification, labeling or represented as conforming to this standard.

Referenced Test Reports: NONE

Note – The test data in any section below with an "RTR" comment have not been obtained from this specimen but from the Referenced Test Report with a specimen of the same or larger size and identical construction.

Design Pressure (DP): The product tested herein has been first evaluated to the Gateway pressure in the referenced specification for the performance class rating achieved.

Gateway Performance Tests

Specification Paragraph	Title of Test	Results	Allowed
2.1.2	*Air Infiltration – ASTM E283*		
	Test Pressure - 1.57 psf	0.18 scfm/ft^2	0.30 scfm/ft^2
	The tested specimen exceeds the performance levels specified in ANSI/AAMA/NWWDA 101/I.S.2 for air infiltration.		
2.1.3	*Water Resistance -- ASTM E547*		
	5 gal/hr-ft^2 – 4 Test cycles – 24 Minutes		
	Design Pressure - 15.0 psf		
	Test Pressure – 2.86 psf		
	With and Without Screen	Pass	No Leakage
2.1.4.2	*Uniform Structural Load - ASTM E330*		
	Design Pressure - 15.0 psf		
	Test Pressure		
	Positive Load – 22.5 psf (150% x DP)	0.033 in.	0.177 in.
	Negative Load – 22.5 psf (150% x DP)	0.020 in.	0.177 in.
	Note: Measurement taken after load from center of the meeting stile		
2.1.7	*Corner Weld*		
	Frame – 4 Corners	Pass	< 100%
	Sashes – 4 Corners	Pass	< 100%
2.1.8	*Forced Entry Resistance - ASTM F588*		
	Lock/Tool Manipulation	Pass	No Entry
	Tests A1 through A7	Pass	No Entry
	Lock/Tool Manipulation	Pass	No Entry
2.2.1.6.1	*Operating Force -- No Standardized Method*		
	Right Sash -- Open/Close	18/18 lbf	20 lbf
2.2.1.6.2	*Deglazing – ASTM E987*		
	Right Sash: Left Stile - 70 lbf	0.0%	<100%
	Right Stile - 70 lbf	0.0%	<100%
	Top Rail - 50 lbf	0.0%	<100%
	Bottom Rail - 50 lbf	0.0%	<100%

Optional Performance Tests

The manufacturer specified herein has successfully achieved all the required criteria in Section 2 of the referenced specification for the Gateway size of the achieved Performance Rating and has further successfully tested the product to higher performance levels as indicated below.

Design Pressure (DP): The product tested herein has been additionally evaluated to the Design Pressure referenced below.

Specification Paragraph	Title of Test	Results	Allowed
4.3	*Water Resistance - ASTM E547*		
	5 gal/hr-ft^2 – 4 Test cycles – 24 Minutes		
	Design Pressure - 35.0 psf		
	Test Pressure – 5.25 psf (15% x DP)		
	With and Without Screen	Pass	No Leakage
4.4	*Uniform Structural Load - ASTM E330*		
	Design Pressure - 40.0 psf		
	Test Pressure		
	Positive Load – 60.0 psf (150% x DP)	0.069 in.	0.177 in.
	Negative Load – 60.0 psf (150% x DP)	0.066 in.	0.177 in.
	Note: Measurement taken after load from center of meeting stile		

Conditions, Terms, and General Notes Regarding These Tests

The product tested **Has Been** compared to the detailed drawings, bill of materials and fabrication information supplied by the client so named herein. Our analysis, which includes dimensional and component description comparisons, indicate the tested product and engineering information supplied by the client **"Are Equivalent"**. **See Appendix A.** The report and representative samples will be retained for four years from the date of initial test.

These test results were obtained by employing all requirements of the designated test methods with no deviations. The test results and specimen supplied for testing are in compliance with the referenced specifications.

The test results are specific to the product tested by this laboratory and of the sample supplied by the client named herein, and they relate to no other product either manufactured by the client, a Fabricator of the client or of installed field performance.

This report does not constitute an AAMA or NWWDA certified product under the certification programs of these organizations. The program administrator of these programs and organizations may only grant product certification.

ETC Laboratories makes no opinions or endorsements regarding this product and its performance. This report may not be reproduced or quoted in partial form without the expressed written approval of ETC Laboratories.

No conclusions of any kind regarding the adequacy of the glass in the test specimen may be drawn from the test. Procedure "A" in ASTM E330 was used for this test.

ETC Laboratories letters, reports, its name or insignia or mark are for the exclusive use of the client so named herein and any other use is strictly prohibited. The report, letters and the name of ETC Laboratories, its seal or mark shall not be used in any circumstance to the general public or in any advertising.

Limitation of Liability: Due diligence was used in rendering this professional opinion. By acceptance of this report, this client agrees to hold harmless and indemnify ETC Laboratories, its employees and offices and owners against all claims and demands of any kind whatsoever, which arise out of or in any manner connected with the performance of work referred to herein.

FOR ETC LABORATORIES

Mark Sennett
AWS Supervisor

Arthur Murray, VP
Manager, Wind Engineering Laboratory

TEST REPORT

ETC Laboratories

RIGHT-J LOAD AND EQUIPMENT SUMMARY
Entire House

Touchstone Heating and Air, Inc.
490 SE 3rd Ave., Lake Butler, FL 32054 Phone: 386-496-3467 Fax: 386-496-3147

Job: Turkey Run Lot 48
11/22/05

Project Information

For: Stanley Crawford Construction
1531 S.W. Commercial Glen, Lake City, FL 32025
Phone: 386-752-5152 Fax: 386-755-2165

Notes:

Design Information

Weather: Gainesville, FL , US

Winter Design Conditions

Outside db	33	°F
Inside db	70	°F
Design TD	37	°F

Summer Design Conditions

Outside db	92	°F
Inside db	75	°F
Design TD	17	°F
Daily range	M	
Relative humidity	50	%
Moisture difference	52	gr/lb

Heating Summary

Building heat loss	61857	Btuh
Ventilation air	0	cfm
Ventilation air loss	0	Btuh
Design heat load	61857	Btuh

Sensible Cooling Equipment Load Sizing

Structure	30919	Btuh
Ventilation	0	Btuh
Design temperature swing	3.0	°F
Use mfg. data	n	
Rate/swing multiplier	0.97	
Total sens. equip. load	29992	Btuh

Infiltration

Method		Simplified
Construction quality		Average
Fireplaces		0
	Heating	Cooling
Area (ft²)	***2083***	***2083***
Volume (ft³)	***17706***	***17706***
Air changes/hour	***0.60***	***0.60***
Equiv. AVF (cfm)	177	177

Latent Cooling Equipment Load Sizing

Internal gains	230	Btuh
Ventilation	0	Btuh
Infiltration	6207	Btuh
Total latent equip. load	6437	Btuh
Total equipment load	36429	Btuh
Req. total capacity at 0.70% SHR	3.6	ton

Heating Equipment Summary

Make Trane
Trade E. XE 1200 Weathertron
TWP042C

Efficiency	9.1 HSPF	
Heating input		
Heating output	42000	Btuh @ 47°F
Heating temp rise	27	°F
Actual heating fan	1400	cfm
Heating air flow factor	0.023	cfm/Btuh

Space thermostat

Cooling Equipment Summary

Make Trane
Trade E. XE 1200 Weathertron
TWP042C
TWE040E13

Efficiency	13.0 SEER	
Sensible cooling	29400	Btuh
Latent cooling	12600	Btuh
Total cooling	42000	Btuh
Actual cooling fan	1400	cfm
Cooling air flow factor	0.045	cfm/Btuh
Load sensible heat ratio	83	%

Bold/italic values have been manually overridden

Printout certified by ACCA to meet all requirements of Manual J 7th Ed.

COLUMBIA COUNTY BUILDING DEPARTMENT

RESIDENTIAL MINIMUM PLAN REQUIREMENTS AND CHECKLIST FOR FLORIDA BUILDING CODE 2001
ONE (1) AND TWO (2) FAMILY DWELLINGS

ALL REQUIREMENTS ARE SUBJECT TO CHANGE
EFFECTIVE MARCH 1, 2002

ALL BUILDING PLANS MUST INDICATE THE FOLLOWING ITEMS AND INDICATE COMPLIANCE WITH CHAPTER 1606 OF THE FLORIDA BUILDING CODE 2001 BY PROVIDING CALCULATIONS AND DETAILS THAT HAVE THE SEAL AND SIGNATURE OF A CERTIFIED ARCHITECT OR ENGINEER REGISTERED IN THE STATE OF FLORIDA, OR ALTERNATE METHODOLOGIES, APPROVED BY THE STATE OF FLORIDA BUILDING COMMISSION FOR ONE-AND-TWO FAMILY DWELLINGS. FOR DESIGN PURPOSES THE FOLLOWING BASIC WIND SPEED AS PER FIGURE 1606 SHALL BE USED.

WIND SPEED LINE SHALL BE DEFINED AS FOLLOWS: THE CENTERLINE OF INTERSTATE 75.

1. ALL BUILDINGS CONSTRUCTED EAST OF SAID LINE SHALL BE -------- 100 MPH
2. ALL BUILDINGS CONSTRUCTED WEST OF SAID LINE SHALL BE --------110 MPH
3. NO AREA IN COLUMBIA COUNTY IS IN A WIND BORNE DEBRIS REGION

APPLICANT – PLEASE CHECK ALL APPLICABLE BOXES BEFORE SUBMITTAL

GENERAL REQUIREMENTS: Two (2) complete sets of plans containing the following:

Applicant	Plans Examiner	
☑	☑	All drawings must be clear, concise and drawn to scale ("Optional " details that are not used shall be marked void or crossed off). Square footage of different areas shall be shown on plans.
☑	☑	Designers name and signature on document (FBC 104.2.1). If licensed architect or engineer, official seal shall be affixed.
☑	☑	**Site Plan including:** a) Dimensions of lot b) Dimensions of building set backs c) Location of all other buildings on lot, well and septic tank if applicable, and all utility easements. d) Provide a full legal description of property.
☑	☑	**Wind-load Engineering Summary, calculations and any details required** a) Plans or specifications must state compliance with FBC Section 1606 b) The following information must be shown as per section 1606.1.7 FBC a. Basic wind speed (MPH) b. Wind importance factor (I) and building category c. Wind exposure – if more than one wind exposure is used, the wind exposure and applicable wind direction shall be indicated d. The applicable internal pressure coefficient e. Components and Cladding. The design wind pressure in terms of psf (kN/m²), to b used for the design of exterior component and cladding materials not specifically designed by the registered design professional
☑	☑	**Elevations including:**
☑	☑	a) All sides
☑	☑	b) Roof pitch NOT ON ELEVATION PLAN
☑	☑	c) Overhang dimensions and detail with attic ventilation
☑	☑	d) Location, size and height above roof of chimneys
☑	☑	e) Location and size of skylights
☑	☑	f) Building height
☑	☑	e) Number of stories

Floor Plan including:

a) Rooms labeled and dimensioned

b) Shear walls

c) Windows and doors (including garage doors) showing size, mfg., approval listing and attachment specs. (FBC 1707) and safety glazing where needed (egress windows in bedrooms to be shown)

d) Fireplaces (gas appliance) (vented or non-vented) or wood burning with hearth

e) Stairs with dimensions (width, tread and riser) and details of guardrails and handrails

f) Must show and identify accessibility requirements (accessible bathroom)

Foundation Plan including:

a) Location of all load-bearing wall with required footings indicated as standard Or monolithic and dimensions and reinforcing

b) All posts and/or column footing including size and reinforcing

c) Any special support required by soil analysis such as piling

d) Location of any vertical steel

Roof System:

a) Truss package including: SEE NOTE 1

1. Truss layout and truss details signed and sealed by Fl. Pro. Eng.
2. Roof assembly (FBC 104.2.1 Roofing system, materials, manufacturer, fastening requirements and product evaluation with wind resistance rating)

b) Conventional Framing Layout including:

1. Rafter size, species and spacing
2. Attachment to wall and uplift
3. Ridge beam sized and valley framing and support details
4. Roof assembly (FBC 104.2.1 Roofing systems, materials, manufacturer, fastening requirements and product evaluation with wind resistance rating)

Wall Sections including:

a) Masonry wall

1. All materials making up wall
2. Block size and mortar type with size and spacing of reinforcement
3. Lintel, tie-beam sizes and reinforcement
4. Gable ends with rake beams showing reinforcement or gable truss and wall bracir details
5. All required connectors with uplift rating and required number and size of fastener for continuous tie from roof to foundation
6. Roof assembly shown here or on roof system detail (FBC 104.2.1 Roofing system materials, manufacturer, fastening requirements and product evaluation with resistance rating)
7. Fire resistant construction (if required)
8. Fireproofing requirements
9. Shoe type of termite treatment (termicide or alternative method)
10. Slab on grade
    a. Vapor retardant (6mil. Polyethylene with joints lapped 6 inches and sealed)
    b. Must show control joints, synthetic fiber reinforcement or Welded fire fabric reinforcement and supports
11. Indicate where pressure treated wood will be placed
12. Provide insulation R value for the following:
    a. Attic space
    b. Exterior wall cavity
    c. Crawl space (if applicable)

☑ ☐ **b) Wood frame wall**

1. All materials making up wall
2. Size and species of studs
3. Sheathing size, type and nailing schedule
4. Headers sized
5. Gable end showing balloon framing detail or gable truss and wall hinge bracing detail
6. All required fasteners for continuous tie from roof to foundation (truss anchors, straps, anchor bolts and washers)
7. Roof assembly shown here or on roof system detail (FBC104.2.1 Roofing system materials, manufacturer, fastening requirements and product evaluation with wind resistance rating)
8. Fire resistant construction (if applicable)
9. Fireproofing requirements
10. Show type of termite treatment (termicide or alternative method)
11. Slab on grade
    a. Vapor retardant (6Mil. Polyethylene with joints lapped 6 inches and sealed
    b. Must show control joints, synthetic fiber reinforcement or welded wire fabric reinforcement and supports
12. Indicate where pressure treated wood will be placed
13. Provide insulation R value for the following:
    a. Attic space
    b. Exterior wall cavity
    c. Crawl space (if applicable)

☐ ☐ c) Metal frame wall and roof (designed, signed and sealed by Florida Prof. Engineer or Architect)

Floor Framing System:

☐ ☐ a) Floor truss package including layout and details, signed and sealed by Florida Registered Professional Engineer

☐ ☐ b) Floor joist size and spacing

☐ ☐ c) Girder size and spacing

☐ ☐ d) Attachment of joist to girder

☐ ☐ e) Wind load requirements where applicable

☑ ☐ **Plumbing Fixture layout**

Electrical layout including:

☑ ☐ a) Switches, outlets/receptacles, lighting and all required GFCI outlets identified

☑ ☐ b) Ceiling fans

☑ ☐ c) Smoke detectors

☑ ☐ d) Service panel and sub-panel size and location(s)

☑ ☐ e) Meter location with type of service entrance (overhead or underground)

☑ ☐ f) Appliances and HVAC equipment

☑ ☐ g) Arc Fault Circuits (AFCI) in bedrooms

HVAC Information

☑ ☐ a) Manual J sizing equipment or equivalent computation

☑ ☐ b) Exhaust fans in bathroom

☑ ☐ **Energy Calculations** (dimensions shall match plans)

☐ ☐ **Gas System** Type (LP or Natural) Location and BTU demand of equipment

☐ ☐ **Disclosure Statement for Owner Builders**

☑ ☐ ***Notice Of Commencement Required Before Any Inspections Will Be Done**

☐ ☐ **Private Potable Water**

a) Size of pump motor

b) Size of pressure tank

c) Cycle stop valve if used

Alpine Engineered Products, Inc.

1950 Marley Drive Haines City, FL 33844
Florida Engineering Certificate of Authorization Number: 567
Florida Certificate of Product Approval # FL1999
 Document ID:1SSS487-Z0907133000

Truss Fabricator: Anderson Truss Company
Job Identification: 5-509-STANLEY CRAWFORD-48 TURKEY RUN
Truss Count: 49
Model Code: Florida Building Code
Truss Criteria: ANSI/TPI-2002(STD)/FBC
Engineering Software: Alpine Software,Version 7.04.
Structural Engineer of Record:
Address:
Minimum Design Loads: Roof - 40.0 PSF @ 1.25 Duration
Floor - N/A
Wind - 110 MPH ASCE 7-98 -Closed

Seal Date: 12/07/2005

-Truss Design Engineer-
Arthur R. Fisher
Florida License Number: 59687
1950 Marley Drive
Haines City, FL 33844

Notes:

1. Determination as to the suitability of these truss components for the structure is the responsibility of the building designer/engineer of record, as defined in ANSI/TPI 1
2. The drawing date shown on this index sheet must match the date shown on the individual truss component drawing.
3. As shown on attached drawings; the drawing number is preceded by: HCUSR487

Details: CNBRGBLK-MAX DEAD LOAD-BRCLBSUB-A11015EC-GBLLETIN-PIGBACKB

#	Ref Description	Drawing#	Date
1	25390--HT7A	05341015	12/07/05
2	25391--HT9A	05341016	12/07/05
3	25392--HT11A	05341017	12/07/05
4	25393--HT13A	05341018	12/07/05
5	25394--H15A	05341019	12/07/05
6	25395--H17A	05341020	12/07/05
7	25396--A	05341021	12/07/05
8	25397--AS	05341022	12/07/05
9	25398--AS1	05341023	12/07/05
10	25399--AS2	05341024	12/07/05
11	25400--AS3	05341025	12/07/05
12	25401--A1	05341026	12/07/05
13	25402--AV1	05341027	12/07/05
14	25403--AV2	05341028	12/07/05
15	25404--AV3	05341007	12/07/05
16	25405--AV4	05341029	12/07/05
17	25406--AV5	05341030	12/07/05
18	25407--AV6	05341031	12/07/05
19	25408--HM7B	05341032	12/07/05
20	25409--HM9B	05341033	12/07/05
21	25410--HM11B	05341034	12/07/05
22	25411--H13B	05341035	12/07/05
23	25412--H15B	05341036	12/07/05
24	25413--H1605B	05341037	12/07/05
25	25414--C	05341008	12/07/05
26	25415--CGE	05341038	12/07/05
27	25416--C1	05341009	12/07/05
28	25417--CG	05341039	12/07/05
29	25418--D	05341040	12/07/05
30	25419--DGE	05341041	12/07/05
31	25420--DSG	05341042	12/07/05
32	25421--EGE	05341043	12/07/05
33	25422--FGE	05341044	12/07/05
34	25423--HJ7	05341045	12/07/05
35	25424--EJ7	05341046	12/07/05
36	25425--CJ5	05341047	12/07/05
37	25426--CJ3	05341048	12/07/05
38	25427--CJ1	05341049	12/07/05
39	25428--EJ7T	05341010	12/07/05
40	25429--EJ7T1	05341011	12/07/05
41	25430--EJ7T2	05341050	12/07/05
42	25431--M	05341012	12/07/05
43	25432--M1	05341013	12/07/05
44	25433--M2	05341014	12/07/05
45	25434--MGE	05341051	12/07/05
46	25435--H19AP	05341052	12/07/05
47	25436--AP	05341053	12/07/05
48	25437--APH	05341054	12/07/05
49	25438--APH1	05341055	12/07/05

Alpine Engineered Products, Inc.

1950 Marley Drive Haines City, FL 33844
Florida Engineering Certificate of Authorization Number: 567
 Document ID:1SSS487-Z0907133000

Truss Fabricator: Anderson Truss Company
Job Identification: 5-509-STANLEY CRAWFORD-48 TURKEY RUN (5-509|-STANLEY CRAWFORD-48 TURKEY RUN)
Truss Count: 6
Model Code: Florida Building Code
Truss Criteria: ANSI/TPI-2002(STD)/FBC
Engineering Software: Alpine Software,Version 7.04.
Structural Engineer of Record:
Address:
Minimum Design Loads: Roof - 40.0 PSF @ 1.25 Duration
Floor - N/A
Wind - 110 MPH ASCE 7-98 -Closed

Seal Date: 12/07/2005

-Truss Design Engineer-
Arthur R. Fisher
Florida License Number: 59687
1950 Marley Drive
Haines City, FL 33844

Notes:

1. Determination as to the suitability of these truss components for the structure is the responsibility of the building designer/engineer of record, as defined in ANSI/TPI 1
2. The drawing date shown on this index sheet must match the date shown on the individual truss component drawing.
3. As shown on attached drawings; the drawing number is preceded by: HCUSR487

Revised Trusses

#	Ref Description	Drawing#	Date
1	25399--AS2	05341024	12/07/05
2	25415--CGE	05341038	12/07/05
3	25419--DGE	05341041	12/07/05
4	25421--EGE	05341043	12/07/05
5	25422--FGE	05341044	12/07/05
6	25434--MGE	05341051	12/07/05

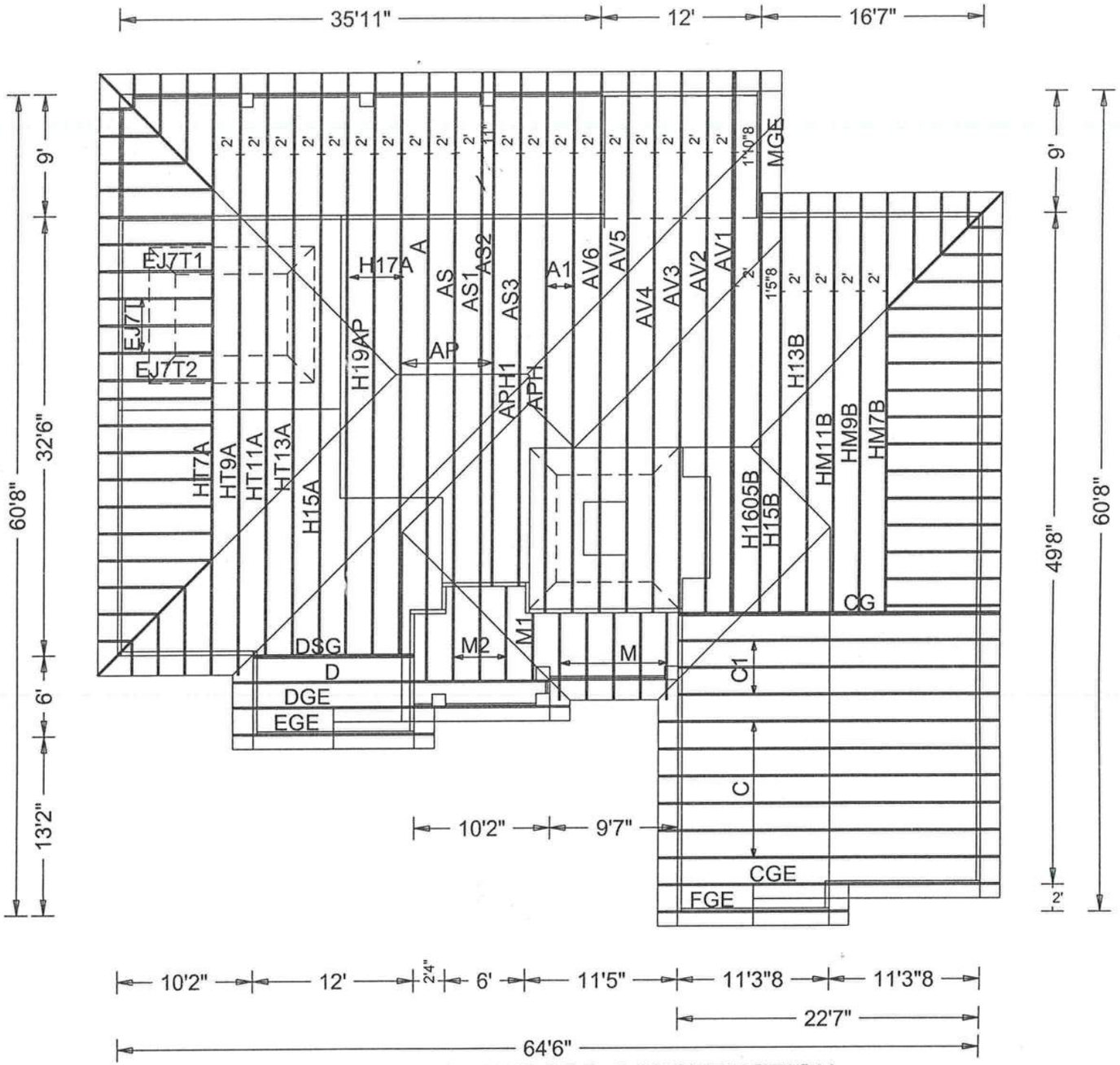

752-5152
867-0686
Mary Ann

12/06/05

#5-509 STANLEY CRAWFORD CONSTRUCTION -
LOT #48 TURKEY RUN

(5-509-STANLEY CRAWFORD-48 TURKEY RUN - HT7A)

Top chord 2x4 SP #2 Dense :T2, T3 2x6 SP #1 Dense:
Bot chord 2x6 SP #1 Dense
Webs 2x4 SP #3

110 mph wind, 15.00 ft mean hgt, ASCE 7-98, CLOSED bldg, Located anywhere in roof, CAT II, EXP B, wind TC DL=2.8 psf, wind BC DL=2.2 psf.

#1 hip supports 7-0-0 jacks with no webs.

Bearing blocks: Nail type: 10d_Common_(0.148"x3",_min.)_nails

BRG	X-LOC	#BLOCKS	LENGTH/BLK	#NAILS/BLK	WALL PLATE
1	9.000'	1	12"	6	Match Truss

Bearing block to be same size and species as bottom chord.
Refer to drawing CNBRGBLK1103 for additional information.

Dead loads are stated on projected horizontal area basis.

Deflection meets L/360 live and L/240 total load. Creep increase factor for dead load is 1.50.

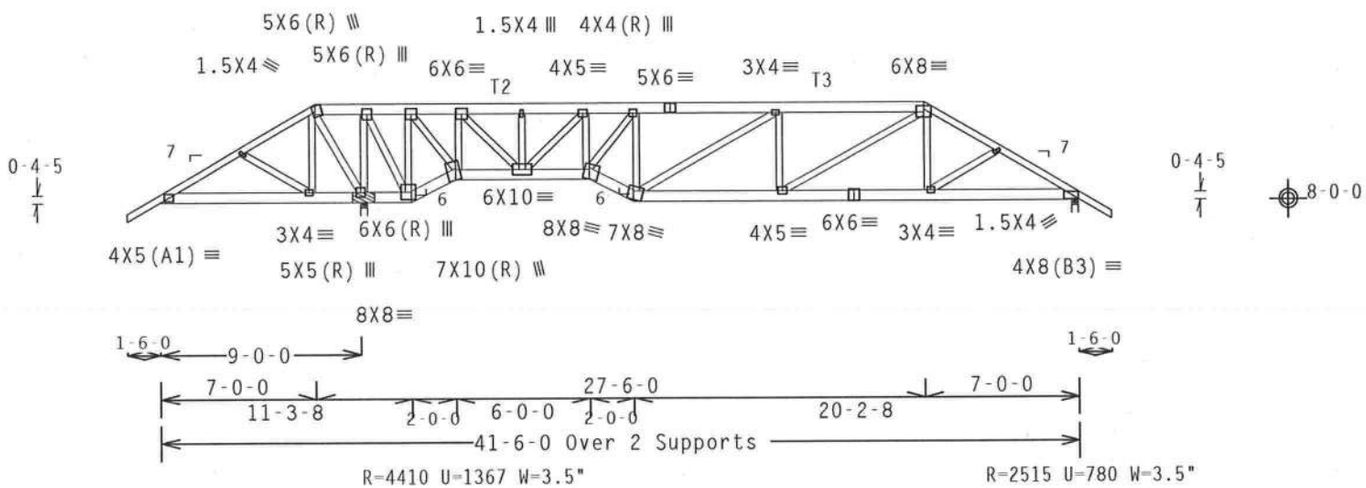

Design Crit: TPI-2002(STD)/FBC

PLT TYP. Wave — Cq/RT=1.00(1.25)/10(0) 7.04.00 — QTY:1 — FL/-/4/-/-/R/- — Scale =.125"/Ft.

ALPINE
Alpine Engineered Products, Inc.
1950 Marley Drive
Haines City, FL 33844
FL Certificate of Authorization # 567

WARNING TRUSSES REQUIRE EXTREME CARE IN FABRICATION, HANDLING, SHIPPING, INSTALLING AND BRACING. REFER TO BCSI 1-03 (BUILDING COMPONENT SAFETY INFORMATION), PUBLISHED BY TPI (TRUSS PLATE INSTITUTE, 583 D'ONOFRIO DR., SUITE 200, MADISON, WI 53719) AND WTCA (WOOD TRUSS COUNCIL OF AMERICA, 6300 ENTERPRISE LN, MADISON, WI 53719) FOR SAFETY PRACTICES PRIOR TO PERFORMING THESE FUNCTIONS. UNLESS OTHERWISE INDICATED, TOP CHORD SHALL HAVE PROPERLY ATTACHED STRUCTURAL PANELS AND BOTTOM CHORD SHALL HAVE A PROPERLY ATTACHED RIGID CEILING.

IMPORTANT FURNISH A COPY OF THIS DESIGN TO THE INSTALLATION CONTRACTOR. ALPINE ENGINEERED PRODUCTS, INC. SHALL NOT BE RESPONSIBLE FOR ANY DEVIATION FROM THIS DESIGN; ANY FAILURE TO BUILD THE TRUSS IN CONFORMANCE WITH TPI; OR FABRICATING, HANDLING, SHIPPING, INSTALLING & BRACING OF TRUSSES. DESIGN CONFORMS WITH APPLICABLE PROVISIONS OF NDS (NATIONAL DESIGN SPEC. BY AF&PA) AND TPI. ALPINE CONNECTOR PLATES ARE MADE OF 20/18/16GA (W,H/S/K) ASTM A653 GRADE 40/60 (W, K/H,S) GALV. STEEL. APPLY PLATES TO EACH FACE OF TRUSS AND, UNLESS OTHERWISE LOCATED ON THIS DESIGN, POSITION PER DRAWINGS 160A-Z. ANY INSPECTION OF PLATES FOLLOWED BY (1) SHALL BE PER ANNEX A3 OF TPI1-2002 SEC.3. A SEAL ON THIS DRAWING INDICATES ACCEPTANCE OF PROFESSIONAL ENGINEERING RESPONSIBILITY SOLELY FOR THE TRUSS COMPONENT DESIGN SHOWN. THE SUITABILITY AND USE OF THIS COMPONENT FOR ANY BUILDING IS THE RESPONSIBILITY OF THE BUILDING DESIGNER PER ANSI/TPI 1 SEC. 2.

ARTHUR R. FISHER LICENSE No.58687 STATE OF FLORIDA PROFESSIONAL ENGINEER
DEC 07 '05

TC LL	20.0 PSF	REF	R487-- 25390
TC DL	10.0 PSF	DATE	12/07/05
BC DL	10.0 PSF	DRW	HCUSR487 05341015
BC LL	0.0 PSF	HC-ENG	JB/AF
TOT.LD.	40.0 PSF	SEQN-	17756
DUR.FAC.	1.25		
SPACING	24.0"	JREF-	1SSS487_Z09

(5-509-STANLEY CRAWFORD-48 TURKEY RUN - HT9A)

Top chord 2x4 SP #2 Dense
Bot chord 2x4 SP #2 Dense
Webs 2x4 SP #3

Dead loads are stated on projected horizontal area basis.

110 mph wind, 10.55 ft mean hgt, ASCE 7-98, CLOSED bldg, not located within 6.50 ft from roof edge, CAT II, EXP B, wind TC DL=2.8 psf, wind BC DL=2.2 psf.

Deflection meets L/360 live and L/240 total load. Creep increase factor for dead load is 1.50.

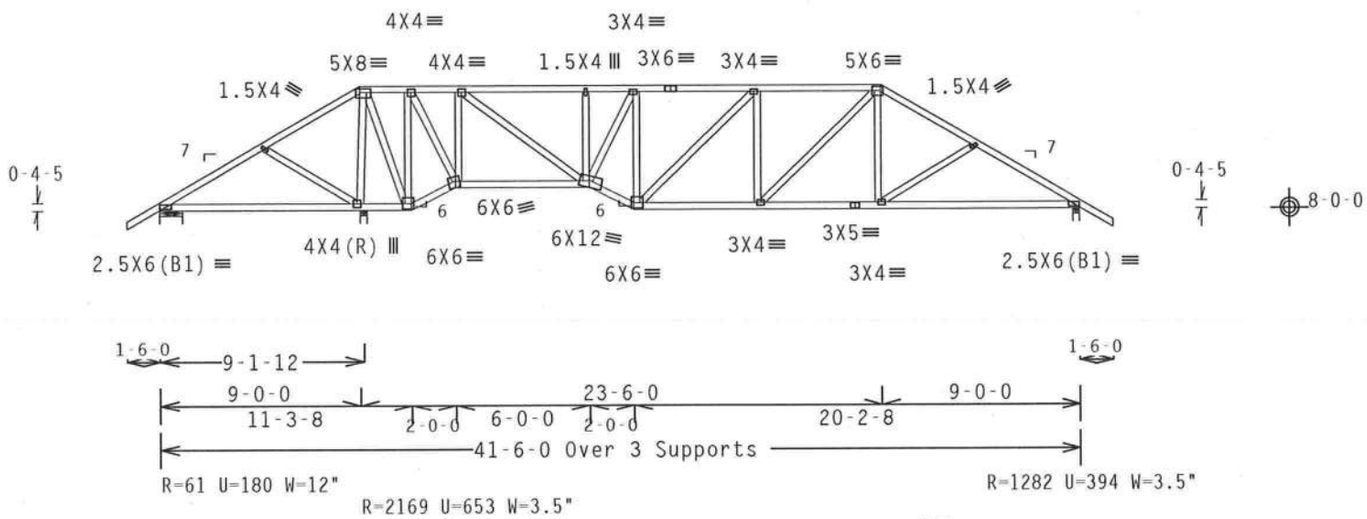

Design Crit: TPI-2002(STD)/FBC
Cq/RT=1.00(1.25)/10(0) 7.04.0 QTY:1 FL/-/4/-/-/R/-

PLT TYP. Wave

Scale =.125"/Ft.

ALPINE

Alpine Engineered Products, Inc.
1950 Marley Drive
Haines City, FL 33844
FL Certificate of Authorization # 567

WARNING TRUSSES REQUIRE EXTREME CARE IN FABRICATION, HANDLING, SHIPPING, INSTALLING AND BRACING. REFER TO BCSI 1-03 (BUILDING COMPONENT SAFETY INFORMATION), PUBLISHED BY TPI (TRUSS PLATE INSTITUTE, 583 D'ONOFRIO DR., SUITE 200, MADISON, WI 53719) AND WTCA (WOOD TRUSS COUNCIL OF AMERICA, 6300 ENTERPRISE LN, MADISON, WI 53719) FOR SAFETY PRACTICES PRIOR TO PERFORMING THESE FUNCTIONS. UNLESS OTHERWISE INDICATED, TOP CHORD SHALL HAVE PROPERLY ATTACHED STRUCTURAL PANELS AND BOTTOM CHORD SHALL HAVE A PROPERLY ATTACHED RIGID CEILING.

IMPORTANT FURNISH A COPY OF THIS DESIGN TO THE INSTALLATION CONTRACTOR. ALPINE ENGINEERED PRODUCTS, INC. SHALL NOT BE RESPONSIBLE FOR ANY DEVIATION FROM THIS DESIGN; ANY FAILURE TO BUILD THE TRUSS IN CONFORMANCE WITH TPI; OR FABRICATING, HANDLING, SHIPPING, INSTALLING & BRACING OF TRUSSES. DESIGN CONFORMS WITH APPLICABLE PROVISIONS OF NDS (NATIONAL DESIGN SPEC. BY AF&PA) AND TPI. ALPINE CONNECTOR PLATES ARE MADE OF 20/18/16GA (W,H/S/K) ASTM A653 GRADE 40/60 (W, K/H,S) GALV. STEEL. APPLY PLATES TO EACH FACE OF TRUSS AND, UNLESS OTHERWISE LOCATED ON THIS DESIGN, POSITION PER DRAWINGS 160A-Z. ANY INSPECTION OF PLATES FOLLOWED BY (I) SHALL BE PER ANNEX A3 OF TPI1-2002 SEC.3. A SEAL ON THIS DRAWING INDICATES ACCEPTANCE OF PROFESSIONAL ENGINEERING RESPONSIBILITY SOLELY FOR THE TRUSS COMPONENT DESIGN SHOWN. THE SUITABILITY AND USE OF THIS COMPONENT FOR ANY BUILDING IS THE RESPONSIBILITY OF THE BUILDING DESIGNER PER ANSI/TPI 1 SEC. 2.

ARTHUR R. FISHER LICENSE No.59687 STATE OF FLORIDA PROFESSIONAL ENGINEER

Dec 07 '05

TC LL	20.0 PSF	REF	R487-- 25391
TC DL	10.0 PSF	DATE	12/07/05
BC DL	10.0 PSF	DRW	HCUSR487 05341016
BC LL	0.0 PSF	HC-ENG	JB/AF
TOT.LD.	40.0 PSF	SEQN-	17757
DUR.FAC.	1.25		
SPACING	24.0"	JREF-	1SSS487_Z09

(5-509-STANLEY CRAWFORD 48 TURKEY RUN - HT11A)

Top chord 2x4 SP #2 Dense
Bot chord 2x4 SP #2 Dense
Webs 2x4 SP #3

Dead loads are stated on projected horizontal area basis.

Deflection meets L/360 live and L/240 total load. Creep increase factor for dead load is 1.50.

110 mph wind, 11.13 ft mean hgt, ASCE 7-98, CLOSED bldg, not located within 6.50 ft from roof edge, CAT II, EXP B, wind TC DL=2.8 psf, wind BC DL=2.2 psf.

H = recommended connection based on manufacturer tested capacities and calculations. Conditions may exist that require different connections than indicated. Refer to manufacturer publication for additional information.

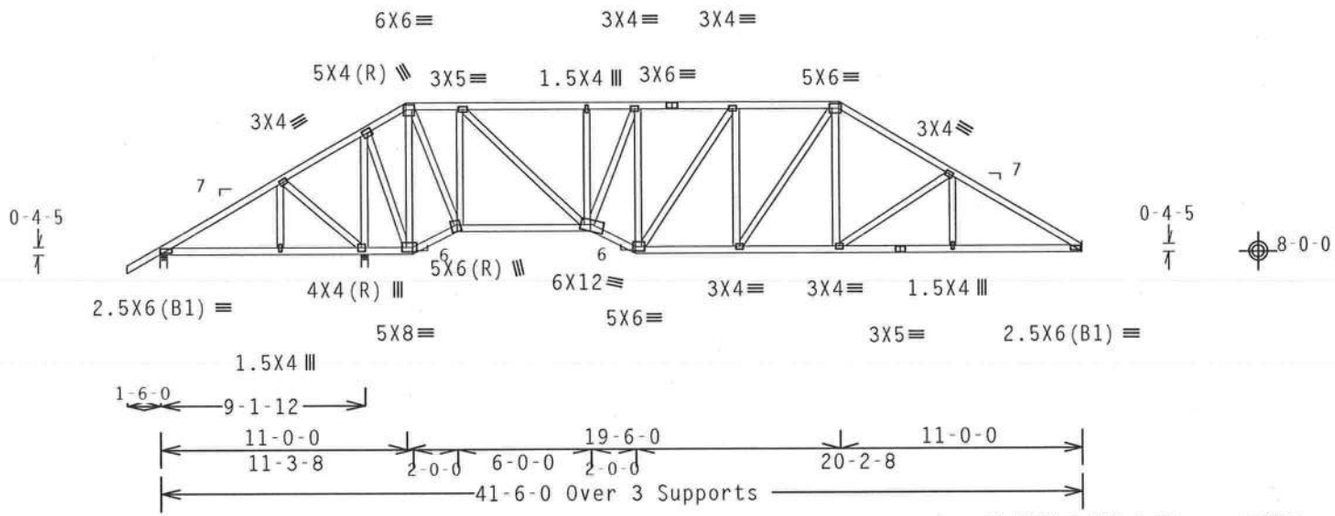

R=81 U=180 W=3.5"

R=2137 U=643 W=3.5"

R=1198 U=362 H=Simpson HUS26
w/ (6) 10d Common, 0.148"x3.0" nails in Truss
w/ (14) 10d Common, 0.148"x3.0" nails in Girder
Girder is (2)2X6 min. So.Pine

Design Crit: TPI-2002(STD)/FBC

PLT TYP. Wave

Cq/RT=1.00(1.25)/10(0) 7.04.0 QTY:1 FL/-/4/-/-/R/- Scale =.125"/Ft.

ALPINE

Alpine Engineered Products, Inc.
1950 Marley Drive
Haines City, FL 33844
FL Certificate of Authorization # 567

WARNING TRUSSES REQUIRE EXTREME CARE IN FABRICATION, HANDLING, SHIPPING, INSTALLING AND BRACING. REFER TO BCSI 1-03 (BUILDING COMPONENT SAFETY INFORMATION), PUBLISHED BY TPI (TRUSS PLATE INSTITUTE, 583 D'ONOFRIO DR., SUITE 200, MADISON, WI 53719) AND WTCA (WOOD TRUSS COUNCIL OF AMERICA, 6300 ENTERPRISE LN, MADISON, WI 53719) FOR SAFETY PRACTICES PRIOR TO PERFORMING THESE FUNCTIONS. UNLESS OTHERWISE INDICATED, TOP CHORD SHALL HAVE PROPERLY ATTACHED STRUCTURAL PANELS AND BOTTOM CHORD SHALL HAVE A PROPERLY ATTACHED RIGID CEILING.

IMPORTANT FURNISH A COPY OF THIS DESIGN TO THE INSTALLATION CONTRACTOR. ALPINE ENGINEERED PRODUCTS, INC. SHALL NOT BE RESPONSIBLE FOR ANY DEVIATION FROM THIS DESIGN; ANY FAILURE TO BUILD THE TRUSS IN CONFORMANCE WITH TPI; OR FABRICATING, HANDLING, SHIPPING, INSTALLING & BRACING OF TRUSSES. DESIGN CONFORMS WITH APPLICABLE PROVISIONS OF NDS (NATIONAL DESIGN SPEC, BY AF&PA) AND TPI. ALPINE CONNECTOR PLATES ARE MADE OF 20/18/16GA (W,H/S/K) ASTM A653 GRADE 40/60 (W, K/H,S) GALV. STEEL. APPLY PLATES TO EACH FACE OF TRUSS AND, UNLESS OTHERWISE LOCATED ON THIS DESIGN, POSITION PER DRAWINGS 160A-Z. ANY INSPECTION OF PLATES FOLLOWED BY (I) SHALL BE PER ANNEX A3 OF TPI1-2002 SEC.3. A SEAL ON THIS DRAWING INDICATES ACCEPTANCE OF PROFESSIONAL ENGINEERING RESPONSIBILITY SOLELY FOR THE TRUSS COMPONENT DESIGN SHOWN. THE SUITABILITY AND USE OF THIS COMPONENT FOR ANY BUILDING IS THE RESPONSIBILITY OF THE BUILDING DESIGNER PER ANSI/TPI 1 SEC. 2.

ARTHUR R. FISHER
LICENSE
No. 59667
STATE OF FLORIDA
PROFESSIONAL ENGINEER

Dec 6, '05

TC LL	20.0 PSF	REF	R487-- 25392
TC DL	10.0 PSF	DATE	12/07/05
BC DL	10.0 PSF	DRW	HCUSR487 05341017
BC LL	0.0 PSF	HC-ENG	JB/AF
TOT.LD.	40.0 PSF	SEQN-	17758
DUR.FAC.	1.25		
SPACING	24.0"	JREF-	1SSS487_Z09

(5-509-STANLEY CRAWFORD-48 TURKEY RUN - HT15A)

Top chord 2x4 SP #2 Dense
Bot chord 2x4 SP #2 Dense
Webs 2x4 SP #3

Dead loads are stated on projected horizontal area basis.

(A) Continuous lateral bracing equally spaced on member.

Deflection meets L/360 live and L/240 total load. Creep increase factor for dead load is 1.50.

110 mph wind, 11.71 ft mean hgt, ASCE 7-98, CLOSED bldg, not located within 6.50 ft from roof edge, CAT II, EXP B, wind TC DL=2.8 psf, wind BC DL=2.2 psf.

H = recommended connection based on manufacturer tested capacities and calculations. Conditions may exist that require different connections than indicated. Refer to manufacturer publication for additional information.

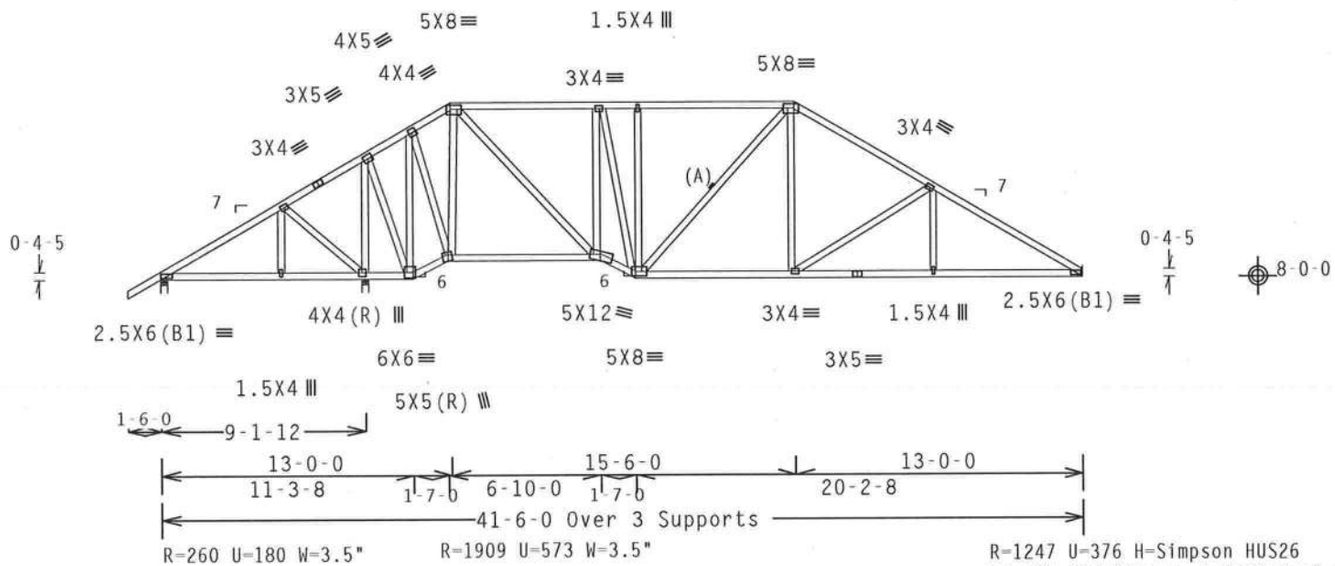

R=1247 U=376 H=Simpson HUS26
w/ (6) 10d Common, 0.148"x3.0" nails in Truss
w/ (14) 10d Common, 0.148"x3.0" nails in Girder
Girder is (2)2X6 min. So.Pine

Design Crit: TPI-2002(STD)/FBC
Cq/RT=1.00(1.25)/10(0) 7.04.0 QTY:1 FL/-/4/-/-/R/-

PLT TYP. Wave

Scale =.125"/Ft.

ARTHUR R. FISHER LICENSE No 59687 STATE OF FLORIDA PROFESSIONAL ENGINEER

Dec 07 '05

TC LL	20.0 PSF	REF	R487-- 25393
TC DL	10.0 PSF	DATE	12/07/05
BC DL	10.0 PSF	DRW	HCUSR487 05341018
BC LL	0.0 PSF	HC-ENG	JB/AF
TOT.LD.	40.0 PSF	SEQN-	17759
DUR.FAC.	1.25		
SPACING	24.0"	JREF-	1SSS487_Z09

ALPINE

Alpine Engineered Products, Inc.
1950 Marley Drive
Haines City, FL 33844
FL Certificate of Authorization # 567

WARNING TRUSSES REQUIRE EXTREME CARE IN FABRICATION, HANDLING, SHIPPING, INSTALLING AND BRACING. REFER TO BCSI 1-03 (BUILDING COMPONENT SAFETY INFORMATION), PUBLISHED BY TPI (TRUSS PLATE INSTITUTE, 583 D'ONOFRIO DR., SUITE 200, MADISON, WI 53719) AND WTCA (WOOD TRUSS COUNCIL OF AMERICA, 6300 ENTERPRISE LN, MADISON, WI 53719) FOR SAFETY PRACTICES PRIOR TO PERFORMING THESE FUNCTIONS. UNLESS OTHERWISE INDICATED, TOP CHORD SHALL HAVE PROPERLY ATTACHED STRUCTURAL PANELS AND BOTTOM CHORD SHALL HAVE A PROPERLY ATTACHED RIGID CEILING.

IMPORTANT FURNISH A COPY OF THIS DESIGN TO THE INSTALLATION CONTRACTOR. ALPINE ENGINEERED PRODUCTS, INC. SHALL NOT BE RESPONSIBLE FOR ANY DEVIATION FROM THIS DESIGN; ANY FAILURE TO BUILD THE TRUSS IN CONFORMANCE WITH TPI; OR FABRICATING, HANDLING, SHIPPING, INSTALLING & BRACING OF TRUSSES. DESIGN CONFORMS WITH APPLICABLE PROVISIONS OF NDS (NATIONAL DESIGN SPEC. BY AF&PA) AND TPI. ALPINE CONNECTOR PLATES ARE MADE OF 20/18/16GA (W,H/S/K) ASTM A653 GRADE 40/60 (W, K/H,S) GALV. STEEL. APPLY PLATES TO EACH FACE OF TRUSS AND, UNLESS OTHERWISE LOCATED ON THIS DESIGN, POSITION PER DRAWINGS 160A-Z. ANY INSPECTION OF PLATES FOLLOWED BY (I) SHALL BE PER ANNEX A3 OF TPI1-2002 SEC.3. A SEAL ON THIS DRAWING INDICATES ACCEPTANCE OF PROFESSIONAL ENGINEERING RESPONSIBILITY SOLELY FOR THE TRUSS COMPONENT DESIGN SHOWN. THE SUITABILITY AND USE OF THIS COMPONENT FOR ANY BUILDING IS THE RESPONSIBILITY OF THE BUILDING DESIGNER PER ANSI/TPI 1 SEC. 2.

(5-509-STANLEY CRAWFORD-48 TURKEY RUN - H15A)

Top chord 2x4 SP #2 Dense
Bot chord 2x4 SP #2 Dense
Webs 2x4 SP #3

Dead loads are stated on projected horizontal area basis.

(A) Continuous lateral bracing equally spaced on member.

Deflection meets L/360 live and L/240 total load. Creep increase factor for dead load is 1.50.

110 mph wind, 12.30 ft mean hgt, ASCE 7-98, CLOSED bldg, not located within 6.50 ft from roof edge, CAT II, EXP B, wind TC DL=2.8 psf, wind BC DL=2.2 psf.

H = recommended connection based on manufacturer tested capacities and calculations. Conditions may exist that require different connections than indicated. Refer to manufacturer publication for additional information.

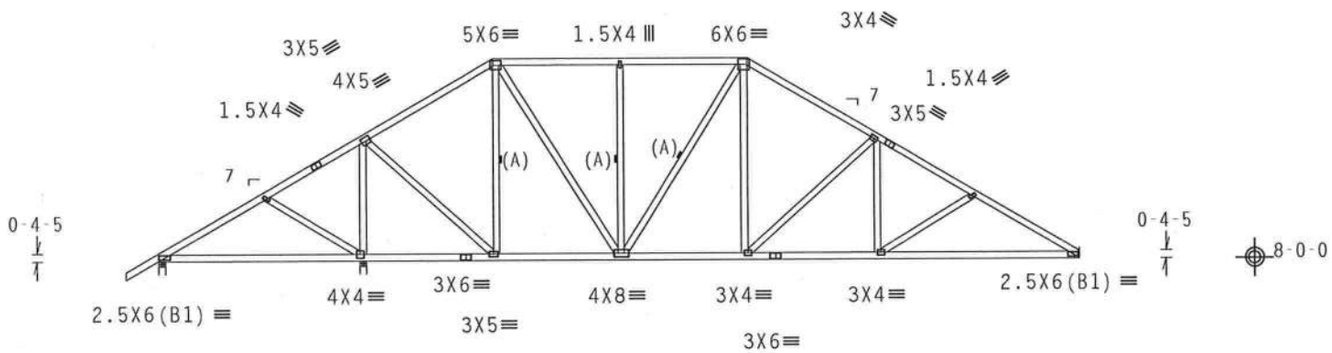

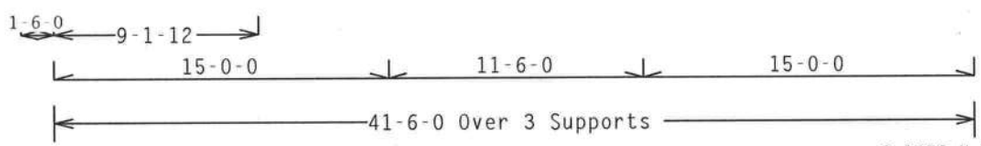

R=294 U=180 W=3.5"

R=1866 U=578 W=3.5"

R=1256 U=374 H=Simpson HUS26
w/ (6) 10d Common, 0.148"x3.0" nails in Truss
w/ (14) 10d Common, 0.148"x3.0" nails in Girder
Girder is (2)2X6 min. So.Pine

Design Crit: TPI-2002(STD)/FBC
Cq/RT=1.00(1.25)/10(0) 7.04.0 QTY:1 FL/-/4/-/-/R/-

PLT TYP. Wave

Scale =.125"/Ft.

ALPINE
Alpine Engineered Products, Inc.
1950 Marley Drive
Haines City, FL 33844
FL Certificate of Authorization # 567

WARNING TRUSSES REQUIRE EXTREME CARE IN FABRICATION, HANDLING, SHIPPING, INSTALLING AND BRACING. REFER TO BCSI 1-03 (BUILDING COMPONENT SAFETY INFORMATION), PUBLISHED BY TPI (TRUSS PLATE INSTITUTE, 583 D'ONOFRIO DR., SUITE 200, MADISON, WI 53719) AND WTCA (WOOD TRUSS COUNCIL OF AMERICA, 6300 ENTERPRISE LN, MADISON, WI 53719) FOR SAFETY PRACTICES PRIOR TO PERFORMING THESE FUNCTIONS. UNLESS OTHERWISE INDICATED, TOP CHORD SHALL HAVE PROPERLY ATTACHED STRUCTURAL PANELS AND BOTTOM CHORD SHALL HAVE A PROPERLY ATTACHED RIGID CEILING.

IMPORTANT FURNISH A COPY OF THIS DESIGN TO THE INSTALLATION CONTRACTOR. ALPINE ENGINEERED PRODUCTS, INC. SHALL NOT BE RESPONSIBLE FOR ANY DEVIATION FROM THIS DESIGN; ANY FAILURE TO BUILD THE TRUSS IN CONFORMANCE WITH TPI; OR FABRICATING, HANDLING, SHIPPING, INSTALLING & BRACING OF TRUSSES. DESIGN CONFORMS WITH APPLICABLE PROVISIONS OF NDS (NATIONAL DESIGN SPEC. BY AF&PA) AND TPI. ALPINE CONNECTOR PLATES ARE MADE OF 20/18/16GA (W,H/S/K) ASTM A653 GRADE 40/60 (W, K/H,S) GALV. STEEL. APPLY PLATES TO EACH FACE OF TRUSS AND, UNLESS OTHERWISE LOCATED ON THIS DESIGN, POSITION PER DRAWINGS 160A-Z. ANY INSPECTION OF PLATES FOLLOWED BY (I) SHALL BE PER ANNEX A3 OF TPI1-2002 SEC.3. A SEAL ON THIS DRAWING INDICATES ACCEPTANCE OF PROFESSIONAL ENGINEERING RESPONSIBILITY SOLELY FOR THE TRUSS COMPONENT DESIGN SHOWN. THE SUITABILITY AND USE OF THIS COMPONENT FOR ANY BUILDING IS THE RESPONSIBILITY OF THE BUILDING DESIGNER PER ANSI/TPI 1 SEC. 2.

ARTHUR R. FISHER LICENSE No.59687 STATE OF FLORIDA PROFESSIONAL ENGINEER

Dec 07 '05

TC LL	20.0 PSF	REF	R487-- 25394
TC DL	10.0 PSF	DATE	12/07/05
BC DL	10.0 PSF	DRW	HCUSR487 05341019
BC LL	0.0 PSF	HC-ENG	JB/AF
TOT.LD.	40.0 PSF	SEQN-	17760
DUR.FAC.	1.25		
SPACING	24.0"	JREF-	1SSS487_Z09

(5-509-STANLEY CRAWFORD-48 TURKEY RUN H17A)

Top chord 2x4 SP #2 Dense
Bot chord 2x4 SP #2 Dense
Webs 2x4 SP #3

Dead loads are stated on projected horizontal area basis.

(A) Continuous lateral bracing equally spaced on member.

Deflection meets L/360 live and L/240 total load. Creep increase factor for dead load is 1.50.

110 mph wind, 12.88 ft mean hgt, ASCE 7-98, CLOSED bldg, not located within 6.50 ft from roof edge, CAT II, EXP B, wind TC DL=2.8 psf, wind BC DL=2.2 psf.

H = recommended connection based on manufacturer tested capacities and calculations. Conditions may exist that require different connections than indicated. Refer to manufacturer publication for additional information.

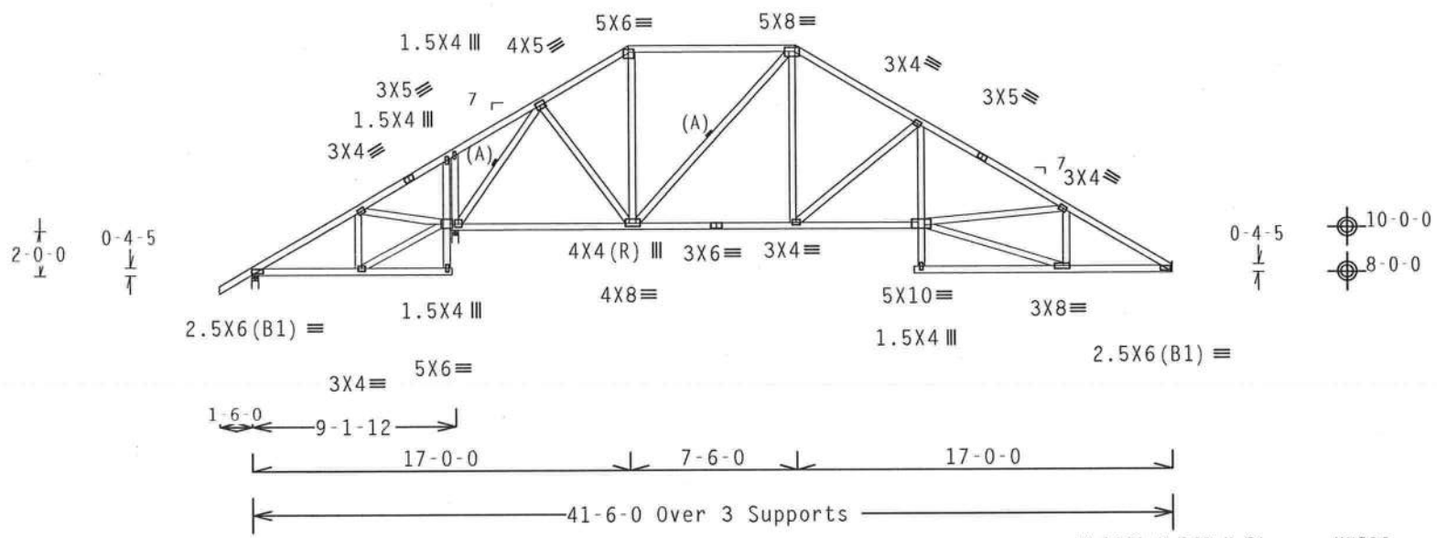

R=264 U=180 W=3.5"
R=1922 U=577 W=3.5"

R=1231 U=368 H=Simpson HUS26
w/ (6) 10d Common, 0.148"x3.0" nails in Truss
w/ (14) 10d Common, 0.148"x3.0" nails in Girder
Girder is (2)2X6 min. So.Pine

Design Crit: TPI-2002(STD)/FBC
Cq/RT=1.00(1.25)/10(0) 7.04.0 TY:3 FL/-/4/-/-/R/-

PLT TYP. Wave

Scale =.125"/Ft.

ALPINE
Alpine Engineered Products, Inc.
1950 Marley Drive
Haines City, FL 33844
FL Certificate of Authorization # 567

WARNING TRUSSES REQUIRE EXTREME CARE IN FABRICATION, HANDLING, SHIPPING, INSTALLING AND BRACING. REFER TO BCSI 1-03 (BUILDING COMPONENT SAFETY INFORMATION), PUBLISHED BY TPI (TRUSS PLATE INSTITUTE, 583 D'ONOFRIO DR., SUITE 200, MADISON, WI 53719) AND WTCA (WOOD TRUSS COUNCIL OF AMERICA, 6300 ENTERPRISE LN, MADISON, WI 53719) FOR SAFETY PRACTICES PRIOR TO PERFORMING THESE FUNCTIONS. UNLESS OTHERWISE INDICATED, TOP CHORD SHALL HAVE PROPERLY ATTACHED STRUCTURAL PANELS AND BOTTOM CHORD SHALL HAVE A PROPERLY ATTACHED RIGID CEILING.

IMPORTANT FURNISH A COPY OF THIS DESIGN TO THE INSTALLATION CONTRACTOR. ALPINE ENGINEERED PRODUCTS, INC. SHALL NOT BE RESPONSIBLE FOR ANY DEVIATION FROM THIS DESIGN; ANY FAILURE TO BUILD THE TRUSS IN CONFORMANCE WITH TPI; OR FABRICATING, HANDLING, SHIPPING, INSTALLING & BRACING OF TRUSSES. DESIGN CONFORMS WITH APPLICABLE PROVISIONS OF NDS (NATIONAL DESIGN SPEC, BY AF&PA) AND TPI. ALPINE CONNECTOR PLATES ARE MADE OF 20/18/16GA (W,H/S/K) ASTM A653 GRADE 40/60 (H, K/H,S) GALV. STEEL. APPLY PLATES TO EACH FACE OF TRUSS AND, UNLESS OTHERWISE LOCATED ON THIS DESIGN, POSITION PER DRAWINGS 160A-Z. ANY INSPECTION OF PLATES FOLLOWED BY (1) SHALL BE PER ANNEX A3 OF TPI1-2002 SEC.3. A SEAL ON THIS DRAWING INDICATES ACCEPTANCE OF PROFESSIONAL ENGINEERING RESPONSIBILITY SOLELY FOR THE TRUSS COMPONENT DESIGN SHOWN. THE SUITABILITY AND USE OF THIS COMPONENT FOR ANY BUILDING IS THE RESPONSIBILITY OF THE BUILDING DESIGNER PER ANSI/TPI 1 SEC. 2.

ARTHUR R. FISHER
LICENSE
No. 59687
STATE OF FLORIDA
PROFESSIONAL ENGINEER
Dec 05

TC LL	20.0 PSF	REF	R487-- 25395
TC DL	10.0 PSF	DATE	12/07/05
BC DL	10.0 PSF	DRW	HCUSR487 05341020
BC LL	0.0 PSF	HC-ENG	JB/AF
TOT.LD.	40.0 PSF	SEQN-	17747
DUR.FAC.	1.25		
SPACING	24.0"	JREF-	1SSS487_Z09

(5-509-STANLEY CRAWFORD-48 TURKEY RUN - A)

Top chord 2x4 SP #2 Dense
Bot chord 2x4 SP #2 Dense
Webs 2x4 SP #3

Dead loads are stated on projected horizontal area basis.

Deflection meets L/360 live and L/240 total load. Creep increase factor for dead load is 1.50.

110 mph wind, 12.88 ft mean hgt, ASCE 7-98, CLOSED bldg, not located within 6.50 ft from roof edge, CAT II, EXP B, wind TC DL=2.8 psf, wind BC DL=2.2 psf.

(A) Continuous lateral bracing equally spaced on member.

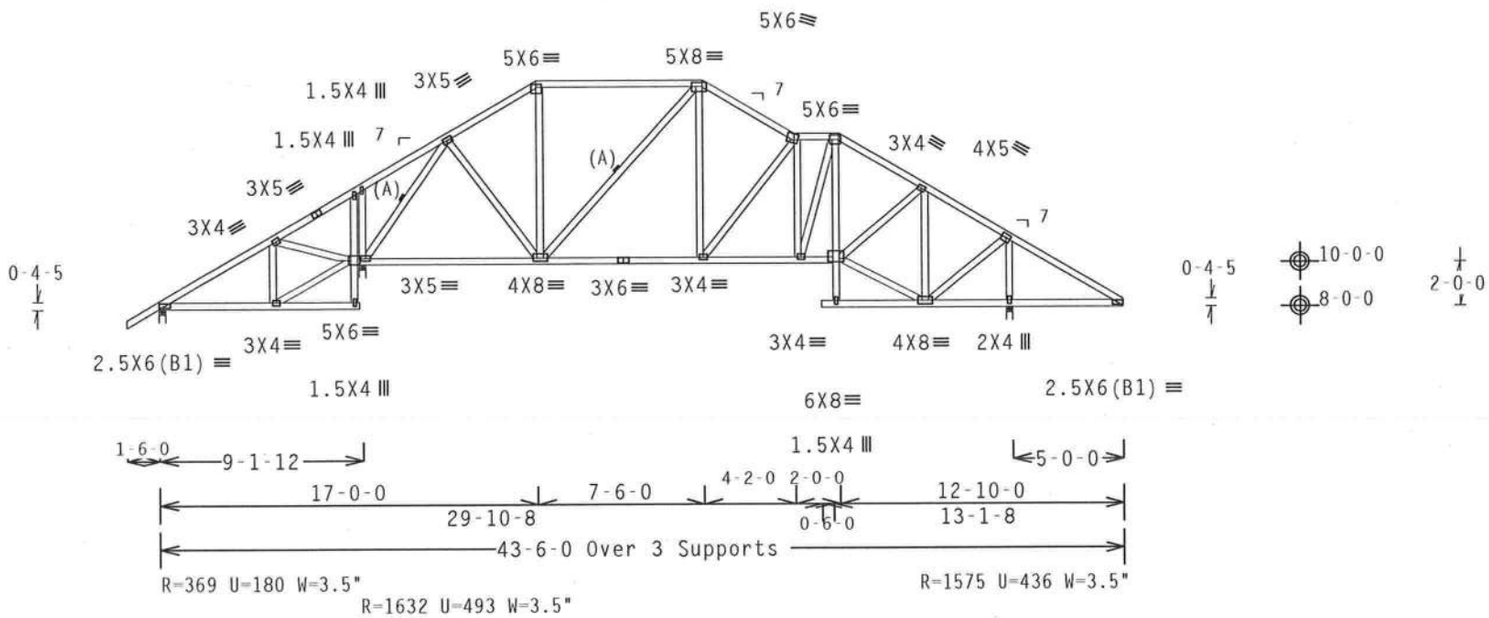

Design Crit: TPI-2002(STD)/FBC
Cq/RT=1.00(1.25)/10(0) 7.04.0 TY:1 FL/-/4/-/-/R/-

PLT TYP. Wave

Scale =.125"/Ft.

ALPINE
Alpine Engineered Products, Inc.
1950 Marley Drive
Haines City, FL 33844
FL Certificate of Authorization # 567

WARNING TRUSSES REQUIRE EXTREME CARE IN FABRICATION, HANDLING, SHIPPING, INSTALLING AND BRACING. REFER TO BCSI 1-03 (BUILDING COMPONENT SAFETY INFORMATION), PUBLISHED BY TPI (TRUSS PLATE INSTITUTE, 583 D'ONOFRIO DR., SUITE 200, MADISON, WI 53719) AND WTCA (WOOD TRUSS COUNCIL OF AMERICA, 6300 ENTERPRISE LN, MADISON, WI 53719) FOR SAFETY PRACTICES PRIOR TO PERFORMING THESE FUNCTIONS. UNLESS OTHERWISE INDICATED, TOP CHORD SHALL HAVE PROPERLY ATTACHED STRUCTURAL PANELS AND BOTTOM CHORD SHALL HAVE A PROPERLY ATTACHED RIGID CEILING.

IMPORTANT FURNISH A COPY OF THIS DESIGN TO THE INSTALLATION CONTRACTOR. ALPINE ENGINEERED PRODUCTS, INC. SHALL NOT BE RESPONSIBLE FOR ANY DEVIATION FROM THIS DESIGN; ANY FAILURE TO BUILD THE TRUSS IN CONFORMANCE WITH TPI; OR FABRICATING, HANDLING, SHIPPING, INSTALLING & BRACING OF TRUSSES. DESIGN CONFORMS WITH APPLICABLE PROVISIONS OF NDS (NATIONAL DESIGN SPEC. BY AF&PA) AND TPI. ALPINE CONNECTOR PLATES ARE MADE OF 20/18/16GA (W,H/S/K) ASTM A653 GRADE 40/60 (W, K/H,S) GALV. STEEL. APPLY PLATES TO EACH FACE OF TRUSS AND, UNLESS OTHERWISE LOCATED ON THIS DESIGN, POSITION PER DRAWINGS 160A-Z. ANY INSPECTION OF PLATES FOLLOWED BY (I) SHALL BE PER ANNEX A3 OF TPI1-2002 SEC.3. A SEAL ON THIS DRAWING INDICATES ACCEPTANCE OF PROFESSIONAL ENGINEERING RESPONSIBILITY SOLELY FOR THE TRUSS COMPONENT DESIGN SHOWN. THE SUITABILITY AND USE OF THIS COMPONENT FOR ANY BUILDING IS THE RESPONSIBILITY OF THE BUILDING DESIGNER PER ANSI/TPI 1 SEC. 2.

ARTHUR R. FISHER
LICENSE
No. 39687
STATE OF FLORIDA
PROFESSIONAL ENGINEER
Dec 07, 2005

TC LL	20.0 PSF	REF	R487-- 25396
TC DL	10.0 PSF	DATE	12/07/05
BC DL	10.0 PSF	DRW	HCUSR487 05341021
BC LL	0.0 PSF	HC-ENG	JB/AF
TOT.LD.	40.0 PSF	SEQN-	17762
DUR.FAC.	1.25		
SPACING	24.0"	JREF-	1SSS487_Z09

(5-509-STANLEY CRAWFORD-48 TURKEY RUN - AS)

Top chord 2x4 SP #2 Dense
Bot chord 2x4 SP #2 Dense
Webs 2x4 SP #3

Dead loads are stated on projected horizontal area basis.

(A) Continuous lateral bracing equally spaced on member.

110 mph wind, 12.88 ft mean hgt, ASCE 7-98, CLOSED bldg, not located within 4.50 ft from roof edge, CAT II, EXP B, wind TC DL=2.8 psf, wind BC DL=2.2 psf.

Right end vertical not exposed to wind pressure.

Deflection meets L/360 live and L/240 total load. Creep increase factor for dead load is 1.50.

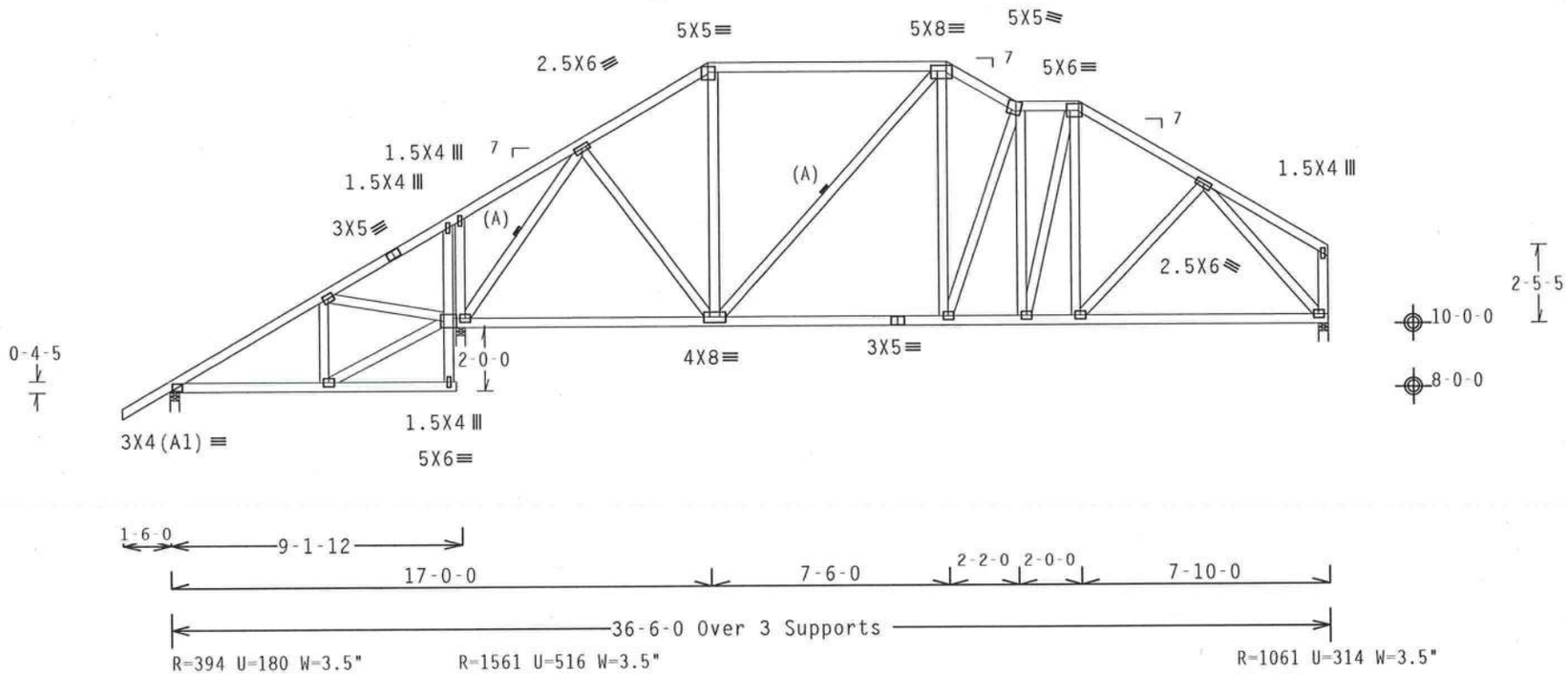

Note: All Plates Are 3X4 Except As Shown.

Design Crit: TPI-2002(STD)/FBC

PLT TYP. Wave

Cq/RT=1.00(1.25)/10(0) 7.04.0 TY:1 FL/-/4/-/-/R/- Scale =.1875"/Ft.

ALPINE

Alpine Engineered Products, Inc.
1950 Marley Drive
Haines City, FL 33844
FL Certificate of Authorization # 567

WARNING TRUSSES REQUIRE EXTREME CARE IN FABRICATION, HANDLING, SHIPPING, INSTALLING AND BRACING. REFER TO BCSI 1-03 (BUILDING COMPONENT SAFETY INFORMATION), PUBLISHED BY TPI (TRUSS PLATE INSTITUTE, 583 D'ONOFRIO DR., SUITE 200, MADISON, WI 53719) AND WTCA (WOOD TRUSS COUNCIL OF AMERICA, 6300 ENTERPRISE LN, MADISON, WI 53719) FOR SAFETY PRACTICES PRIOR TO PERFORMING THESE FUNCTIONS. UNLESS OTHERWISE INDICATED, TOP CHORD SHALL HAVE PROPERLY ATTACHED STRUCTURAL PANELS AND BOTTOM CHORD SHALL HAVE A PROPERLY ATTACHED RIGID CEILING.

IMPORTANT FURNISH A COPY OF THIS DESIGN TO THE INSTALLATION CONTRACTOR. ALPINE ENGINEERED PRODUCTS, INC. SHALL NOT BE RESPONSIBLE FOR ANY DEVIATION FROM THIS DESIGN; ANY FAILURE TO BUILD THE TRUSS IN CONFORMANCE WITH TPI: OR FABRICATING, HANDLING, SHIPPING, INSTALLING & BRACING OF TRUSSES. DESIGN CONFORMS WITH APPLICABLE PROVISIONS OF NDS (NATIONAL DESIGN SPEC, BY AF&PA) AND TPI. ALPINE CONNECTOR PLATES ARE MADE OF 20/18/16GA (W,H/S/K) ASTM A653 GRADE 40/60 (W, K/H,S) GALV. STEEL. APPLY PLATES TO EACH FACE OF TRUSS AND, UNLESS OTHERWISE LOCATED ON THIS DESIGN, POSITION PER DRAWINGS 160A-2. ANY INSPECTION OF PLATES FOLLOWED BY (I) SHALL BE PER ANNEX A3 OF TPI1-2002 SEC.3. A SEAL ON THIS DRAWING INDICATES ACCEPTANCE OF PROFESSIONAL ENGINEERING RESPONSIBILITY SOLELY FOR THE TRUSS COMPONENT DESIGN SHOWN. THE SUITABILITY AND USE OF THIS COMPONENT FOR ANY BUILDING IS THE RESPONSIBILITY OF THE BUILDING DESIGNER PER ANSI/TPI 1 SEC. 2.

ARTHUR R. FISHER LICENSE No. 59687 STATE OF FLORIDA PROFESSIONAL ENGINEER

Dec 07 '05

TC LL	20.0 PSF	REF	R487-- 25397
TC DL	10.0 PSF	DATE	12/07/05
BC DL	10.0 PSF	DRW	HCUSR487 05341022
BC LL	0.0 PSF	HC-ENG	JB/AF
TOT.LD.	40.0 PSF	SEQN-	17773
DUR.FAC.	1.25		
SPACING	24.0"	JREF-	1SSS487_Z09

(5-509-STANLEY CRAWFORD-48 TURKEY RUN - AS1)

Top chord 2x4 SP #2 Dense
Bot chord 2x4 SP #2 Dense
Webs 2x4 SP #3

Dead loads are stated on projected horizontal area basis.

(A) Continuous lateral bracing equally spaced on member.

110 mph wind, 12.88 ft mean hgt, ASCE 7-98, CLOSED bldg, not located within 4.50 ft from roof edge, CAT II, EXP B, wind TC DL=2.8 psf, wind BC DL=2.2 psf.

Right end vertical not exposed to wind pressure.

Deflection meets L/360 live and L/240 total load. Creep increase factor for dead load is 1.50.

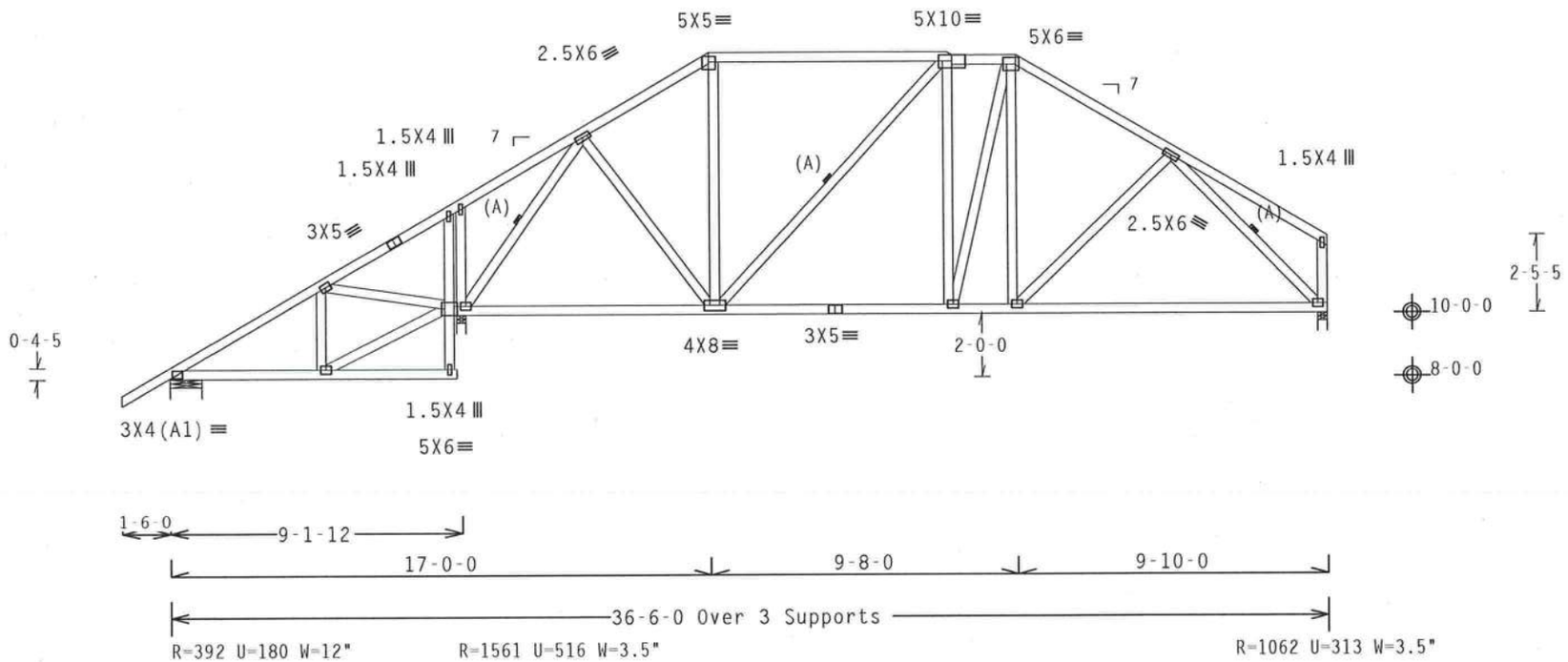

Note: All Plates Are 3X4 Except As Shown.

Design Crit: TPI-2002(STD)/FBC

PLT TYP. Wave — Cq/RT=1.00(1.25)/10(0) 7.04.08 — TY:1 — FL/-/4/-/-/R/- — Scale =.1875"/Ft.

ALPINE

Alpine Engineered Products, Inc.
1950 Marley Drive
Haines City, FL 33844
FL Certificate of Authorization # 567

WARNING TRUSSES REQUIRE EXTREME CARE IN FABRICATION, HANDLING, SHIPPING, INSTALLING AND BRACING. REFER TO BCSI 1-03 (BUILDING COMPONENT SAFETY INFORMATION), PUBLISHED BY TPI (TRUSS PLATE INSTITUTE, 583 D'ONOFRIO DR., SUITE 200, MADISON, WI 53719) AND WTCA (WOOD TRUSS COUNCIL OF AMERICA, 6300 ENTERPRISE LN, MADISON, WI 53719) FOR SAFETY PRACTICES PRIOR TO PERFORMING THESE FUNCTIONS. UNLESS OTHERWISE INDICATED, TOP CHORD SHALL HAVE PROPERLY ATTACHED STRUCTURAL PANELS AND BOTTOM CHORD SHALL HAVE A PROPERLY ATTACHED RIGID CEILING.

IMPORTANT FURNISH A COPY OF THIS DESIGN TO THE INSTALLATION CONTRACTOR. ALPINE ENGINEERED PRODUCTS, INC. SHALL NOT BE RESPONSIBLE FOR ANY DEVIATION FROM THIS DESIGN; ANY FAILURE TO BUILD THE TRUSS IN CONFORMANCE WITH TPI; OR FABRICATING, HANDLING, SHIPPING, INSTALLING & BRACING OF TRUSSES. DESIGN CONFORMS WITH APPLICABLE PROVISIONS OF NDS (NATIONAL DESIGN SPEC. BY AF&PA) AND TPI. ALPINE CONNECTOR PLATES ARE MADE OF 20/18/16GA (W,H/S/K) ASTM A653 GRADE 40/60 (W, K/H,S) GALV. STEEL. APPLY PLATES TO EACH FACE OF TRUSS AND, UNLESS OTHERWISE LOCATED ON THIS DESIGN, POSITION PER DRAWINGS 160A-Z. ANY INSPECTION OF PLATES FOLLOWED BY (1) SHALL BE PER ANNEX A3 OF TPI1-2002 SEC.3. A SEAL ON THIS DRAWING INDICATES ACCEPTANCE OF PROFESSIONAL ENGINEERING RESPONSIBILITY SOLELY FOR THE TRUSS COMPONENT DESIGN SHOWN. THE SUITABILITY AND USE OF THIS COMPONENT FOR ANY BUILDING IS THE RESPONSIBILITY OF THE BUILDING DESIGNER PER ANSI/TPI 1 SEC. 2.

ARTHUR R. FISHER LICENSE No. 59687 STATE OF FLORIDA PROFESSIONAL ENGINEER

Dec 07 '05

TC LL	20.0 PSF	REF	R487-- 25398
TC DL	10.0 PSF	DATE	12/07/05
BC DL	10.0 PSF	DRW	HCUSR487 05341023
BC LL	0.0 PSF	HC-ENG	JB/AF
TOT.LD.	40.0 PSF	SEQN-	17776
DUR.FAC.	1.25		
SPACING	24.0"	JREF-	1SSS487_Z09

(5-509-STANLEY CRAWFORD-48 TURKEY RUN - AS2)

Top chord 2x4 SP #2 Dense
Bot chord 2x4 SP #2 Dense
Webs 2x4 SP #3

Dead loads are stated on projected horizontal area basis.

Deflection meets L/360 live and L/240 total load. Creep increase factor for dead load is 1.50.

SEE DWGS TCFILLER1103 AND BCFILLER1103 FOR FILLER DETAILS. LATERALLY BRACE BOTTOM CHORD ABOVE FILLER AT 24" O.C,AND TOP CHORD UNDER FILLER AT 24" OC INCLUDING A LATERAL BRACE AT CHORD ENDS.

110 mph wind, 13.10 ft mean hgt, ASCE 7-98, CLOSED bldg, not located within 4.50 ft from roof edge, CAT II, EXP B, wind TC DL=2.8 psf, wind BC DL=2.2 psf.

Right end vertical not exposed to wind pressure.

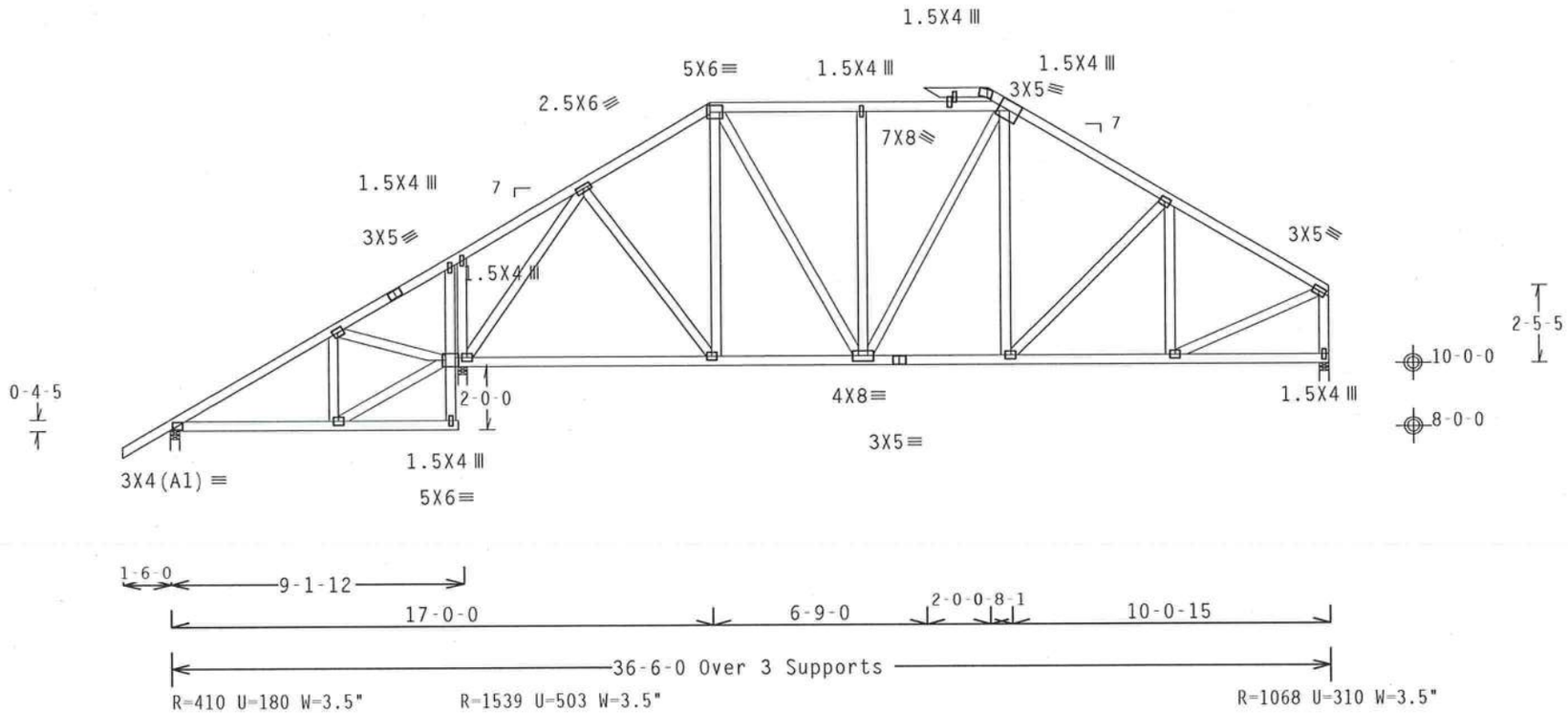

Note: All Plates Are 3X4 Except As Shown.

Design Crit: TPI-2002(STD)/FBC

PLT TYP. Wave — Cq/RT=1.00(1.25)/10(0) 7.04.0 TY:1 FL/-/4/-/-/R/- Scale =.1875"/Ft.

ALPINE
Alpine Engineered Products, Inc.
1950 Marley Drive
Haines City, FL 33844
FL Certificate of Authorization # 567

WARNING TRUSSES REQUIRE EXTREME CARE IN FABRICATION, HANDLING, SHIPPING, INSTALLING AND BRACING. REFER TO BCSI 1-03 (BUILDING COMPONENT SAFETY INFORMATION), PUBLISHED BY TPI (TRUSS PLATE INSTITUTE, 583 D'ONOFRIO DR., SUITE 200, MADISON, WI 53719) AND WTCA (WOOD TRUSS COUNCIL OF AMERICA, 6300 ENTERPRISE LN, MADISON, WI 53719) FOR SAFETY PRACTICES PRIOR TO PERFORMING THESE FUNCTIONS. UNLESS OTHERWISE INDICATED, TOP CHORD SHALL HAVE PROPERLY ATTACHED STRUCTURAL PANELS AND BOTTOM CHORD SHALL HAVE A PROPERLY ATTACHED RIGID CEILING.

IMPORTANT FURNISH A COPY OF THIS DESIGN TO THE INSTALLATION CONTRACTOR. ALPINE ENGINEERED PRODUCTS, INC. SHALL NOT BE RESPONSIBLE FOR ANY DEVIATION FROM THIS DESIGN; ANY FAILURE TO BUILD THE TRUSS IN CONFORMANCE WITH TPI; OR FABRICATING, HANDLING, SHIPPING, INSTALLING & BRACING OF TRUSSES. DESIGN CONFORMS WITH APPLICABLE PROVISIONS OF NDS (NATIONAL DESIGN SPEC. BY AF&PA) AND TPI. ALPINE CONNECTOR PLATES ARE MADE OF 20/18/16GA (W,H/S/K) ASTM A653 GRADE 40/60 (H, K/H,S) GALV. STEEL. APPLY PLATES TO EACH FACE OF TRUSS AND, UNLESS OTHERWISE LOCATED ON THIS DESIGN, POSITION PER DRAWINGS 160A-Z. ANY INSPECTION OF PLATES FOLLOWED BY (1) SHALL BE PER ANNEX A3 OF TPI1-2002 SEC.3. A SEAL ON THIS DRAWING INDICATES ACCEPTANCE OF PROFESSIONAL ENGINEERING RESPONSIBILITY SOLELY FOR THE TRUSS COMPONENT DESIGN SHOWN. THE SUITABILITY AND USE OF THIS COMPONENT FOR ANY BUILDING IS THE RESPONSIBILITY OF THE BUILDING DESIGNER PER ANSI/TPI 1 SEC. 2.

ARTHUR R. FISHER LICENSE No. 59687 STATE OF FLORIDA PROFESSIONAL ENGINEER

Dec 07 '05

TC LL	20.0 PSF	REF	R487-- 25399
TC DL	10.0 PSF	DATE	12/07/05
BC DL	10.0 PSF	DRW	HCUSR487 05341024
BC LL	0.0 PSF	HC-ENG	JB/AF
TOT.LD.	40.0 PSF	SEQN-	17763 REV
DUR.FAC.	1.25		
SPACING	24.0"	JREF-	1SSS487_Z09

(5-509-STANLEY CRAWFORD-48 TURKEY RUN - AS3)

Top chord 2x4 SP #2 Dense
Bot chord 2x4 SP #2 Dense
Webs 2x4 SP #3

Dead loads are stated on projected horizontal area basis.

(A) Continuous lateral bracing equally spaced on member.

110 mph wind, 12.88 ft mean hgt, ASCE 7-98, CLOSED bldg, not located within 4.50 ft from roof edge, CAT II, EXP B, wind TC DL=2.8 psf, wind BC DL=2.2 psf.

Right end vertical not exposed to wind pressure.

Deflection meets L/360 live and L/240 total load. Creep increase factor for dead load is 1.50.

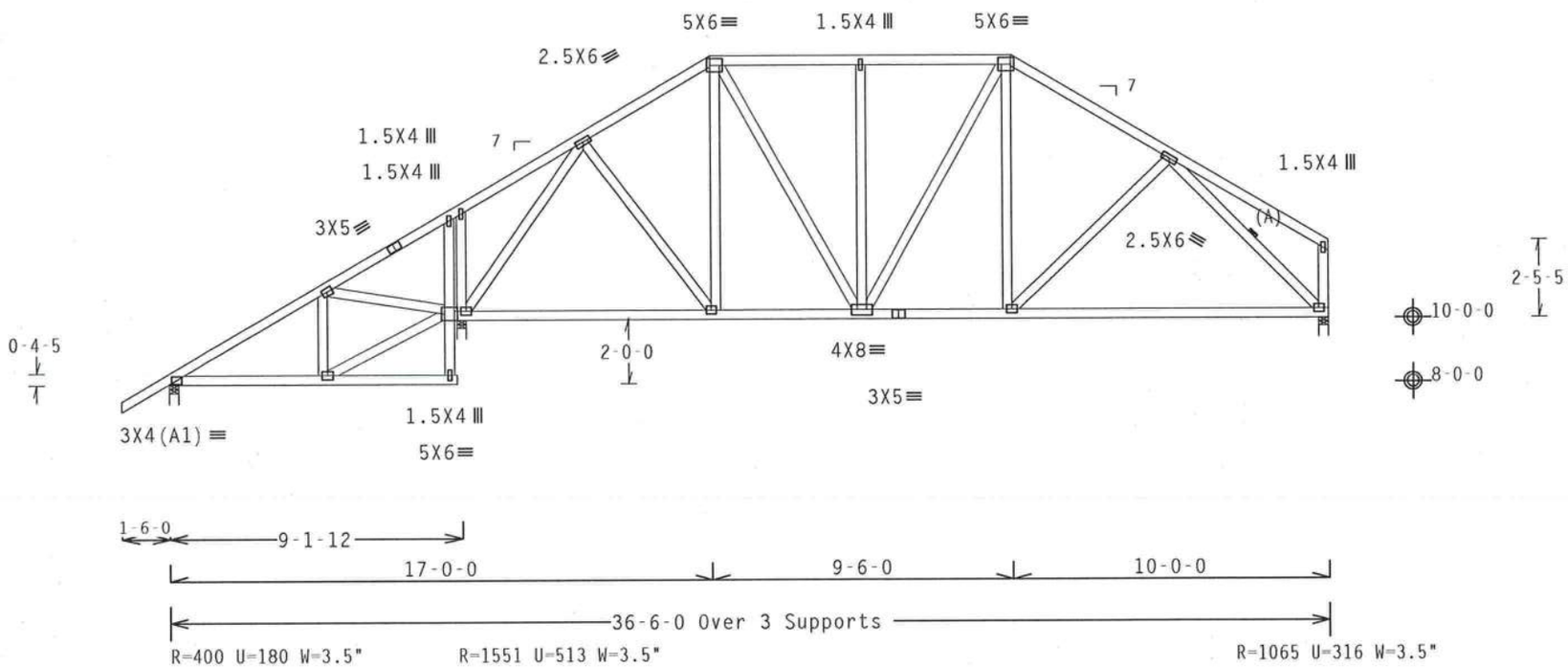

Note: All Plates Are 3X4 Except As Shown.

Design Crit: TPI-2002(STD)/FBC

PLT TYP. Wave Cq/RT=1.00(1.25)/10(0) 7.04.0 QTY:1 FL/-/4/-/-/R/- Scale =.1875"/Ft.

ALPINE

Alpine Engineered Products, Inc.
1950 Marley Drive
Haines City, FL 33844
FL Certificate of Authorization # 567

WARNING TRUSSES REQUIRE EXTREME CARE IN FABRICATION, HANDLING, SHIPPING, INSTALLING AND BRACING. REFER TO BCSI 1-03 (BUILDING COMPONENT SAFETY INFORMATION), PUBLISHED BY TPI (TRUSS PLATE INSTITUTE, 583 D'ONOFRIO DR., SUITE 200, MADISON, WI 53719) AND WTCA (WOOD TRUSS COUNCIL OF AMERICA, 6300 ENTERPRISE LN, MADISON, WI 53719) FOR SAFETY PRACTICES PRIOR TO PERFORMING THESE FUNCTIONS. UNLESS OTHERWISE INDICATED, TOP CHORD SHALL HAVE PROPERLY ATTACHED STRUCTURAL PANELS AND BOTTOM CHORD SHALL HAVE A PROPERLY ATTACHED RIGID CEILING.

IMPORTANT FURNISH A COPY OF THIS DESIGN TO THE INSTALLATION CONTRACTOR. ALPINE ENGINEERED PRODUCTS, INC. SHALL NOT BE RESPONSIBLE FOR ANY DEVIATION FROM THIS DESIGN; ANY FAILURE TO BUILD THE TRUSS IN CONFORMANCE WITH TPI; OR FABRICATING, HANDLING, SHIPPING, INSTALLING & BRACING OF TRUSSES. DESIGN CONFORMS WITH APPLICABLE PROVISIONS OF NDS (NATIONAL DESIGN SPEC, BY AF&PA) AND TPI. ALPINE CONNECTOR PLATES ARE MADE OF 20/18/16GA (W,H/S/K) ASTM A653 GRADE 40/60 (W, K/H,S) GALV. STEEL. APPLY PLATES TO EACH FACE OF TRUSS AND, UNLESS OTHERWISE LOCATED ON THIS DESIGN, POSITION PER DRAWINGS 160A-Z. ANY INSPECTION OF PLATES FOLLOWED BY (I) SHALL BE PER ANNEX A3 OF TPI1-2002 SEC.3. A SEAL ON THIS DRAWING INDICATES ACCEPTANCE OF PROFESSIONAL ENGINEERING RESPONSIBILITY SOLELY FOR THE TRUSS COMPONENT DESIGN SHOWN. THE SUITABILITY AND USE OF THIS COMPONENT FOR ANY BUILDING IS THE RESPONSIBILITY OF THE BUILDING DESIGNER PER ANSI/TPI 1 SEC. 2.

ARTHUR R. FISHER
LICENSE
No. 59687
STATE OF FLORIDA
PROFESSIONAL ENGINEER
Dec 07 '05

TC LL	20.0 PSF	REF	R487-- 25400
TC DL	10.0 PSF	DATE	12/07/05
BC DL	10.0 PSF	DRW	HCUSR487 05341025
BC LL	0.0 PSF	HC-ENG	JB/AF
TOT.LD.	40.0 PSF	SEQN-	17769
DUR.FAC.	1.25		
SPACING	24.0"	JREF-	1SSS487_Z09

(5-509-STANLEY CRAWFORD-48 TURKEY RUN A1)

Top chord 2x4 SP #2 Dense
Bot chord 2x4 SP #2 Dense
Webs 2x4 SP #3

Dead loads are stated on projected horizontal area basis.

Deflection meets L/360 live and L/240 total load. Creep increase factor for dead load is 1.50.

110 mph wind, 12.97 ft mean hgt, ASCE 7-98, CLOSED bldg, not located within 4.50 ft from roof edge, CAT II, EXP B, wind TC DL=2.8 psf, wind BC DL=2.2 psf.

(A) Continuous lateral bracing equally spaced on member.

Shim all supports to solid bearing.

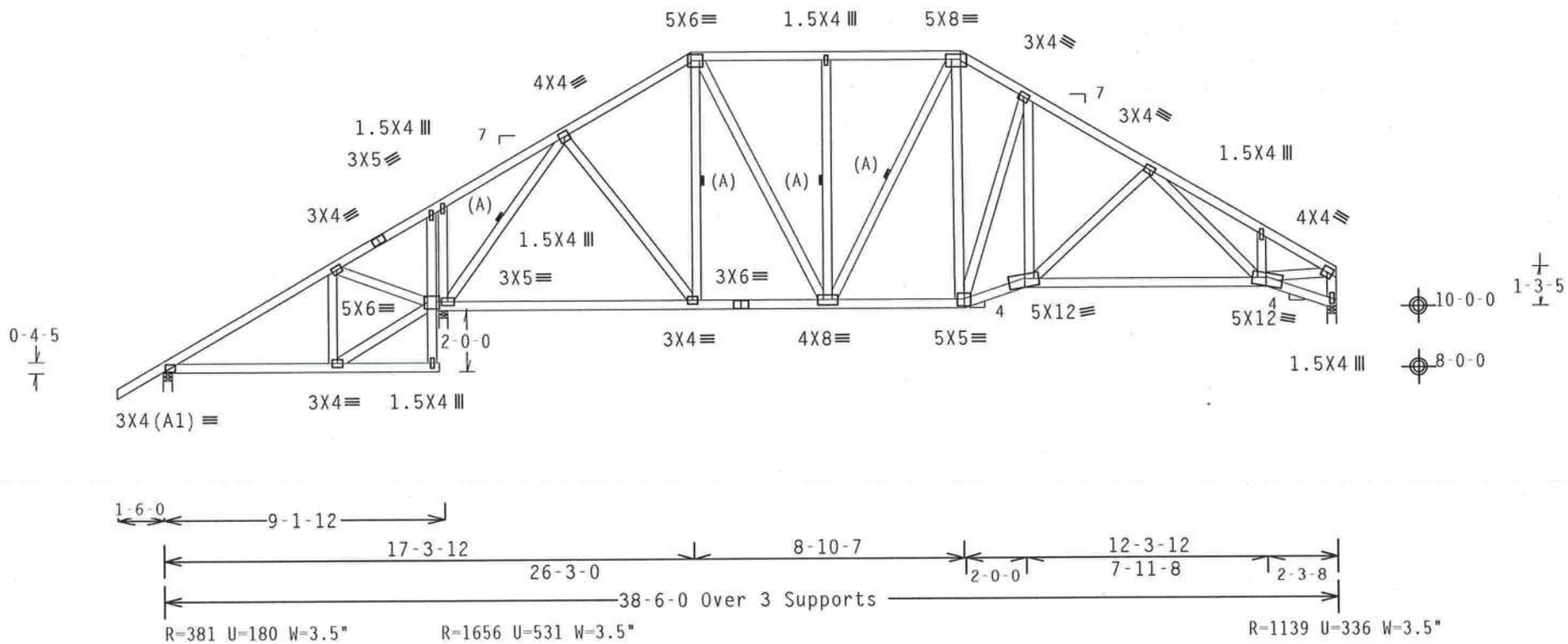

Design Crit: TPI-2002(STD)/FBC
Cq/RT=1.00(1.25)/10(0) 7.04.08 QTY:2 FL/-/4/-/-/R/-

PLT TYP. Wave

Scale =.1875"/Ft.

ALPINE
Alpine Engineered Products, Inc.
1950 Marley Drive
Haines City, FL 33844
FL Certificate of Authorization # 567

WARNING TRUSSES REQUIRE EXTREME CARE IN FABRICATION, HANDLING, SHIPPING, INSTALLING AND BRACING. REFER TO BCSI 1-03 (BUILDING COMPONENT SAFETY INFORMATION), PUBLISHED BY TPI (TRUSS PLATE INSTITUTE, 583 D'ONOFRIO DR., SUITE 200, MADISON, WI 53719) AND WTCA (WOOD TRUSS COUNCIL OF AMERICA, 6300 ENTERPRISE LN, MADISON, WI 53719) FOR SAFETY PRACTICES PRIOR TO PERFORMING THESE FUNCTIONS. UNLESS OTHERWISE INDICATED, TOP CHORD SHALL HAVE PROPERLY ATTACHED STRUCTURAL PANELS AND BOTTOM CHORD SHALL HAVE A PROPERLY ATTACHED RIGID CEILING.

IMPORTANT FURNISH A COPY OF THIS DESIGN TO THE INSTALLATION CONTRACTOR. ALPINE ENGINEERED PRODUCTS, INC. SHALL NOT BE RESPONSIBLE FOR ANY DEVIATION FROM THIS DESIGN; ANY FAILURE TO BUILD THE TRUSS IN CONFORMANCE WITH TPI; OR FABRICATING, HANDLING, SHIPPING, INSTALLING & BRACING OF TRUSSES. DESIGN CONFORMS WITH APPLICABLE PROVISIONS OF NDS (NATIONAL DESIGN SPEC, BY AF&PA) AND TPI. ALPINE CONNECTOR PLATES ARE MADE OF 20/18/16GA (W,H/S/K) ASTM A653 GRADE 40/60 (W, K/H,S) GALV. STEEL. APPLY PLATES TO EACH FACE OF TRUSS AND, UNLESS OTHERWISE LOCATED ON THIS DESIGN, POSITION PER DRAWINGS 160A-Z. ANY INSPECTION OF PLATES FOLLOWED BY (1) SHALL BE PER ANNEX A3 OF TPI1-2002 SEC.3. A SEAL ON THIS DRAWING INDICATES ACCEPTANCE OF PROFESSIONAL ENGINEERING RESPONSIBILITY SOLELY FOR THE TRUSS COMPONENT DESIGN SHOWN. THE SUITABILITY AND USE OF THIS COMPONENT FOR ANY BUILDING IS THE RESPONSIBILITY OF THE BUILDING DESIGNER PER ANSI/TPI 1 SEC. 2.

ARTHUR R. FISHER
LICENSE
No. 59687
STATE OF FLORIDA
PROFESSIONAL ENGINEER
Dec 07 '05

TC LL	20.0 PSF	REF	R487-- 25401
TC DL	10.0 PSF	DATE	12/07/05
BC DL	10.0 PSF	DRW	HCUSR487 05341026
BC LL	0.0 PSF	HC-ENG	JB/AF
TOT.LD.	40.0 PSF	SEQN-	17761
DUR.FAC.	1.25		
SPACING	24.0"	JREF-	1SSS487_Z09

(5-509-STANLEY CRAWFORD-48 TURKEY RUN AV1)

Top chord 2x4 SP #2 Dense
Bot chord 2x4 SP #2 Dense :B2 2x6 SP #1 Dense:
Webs 2x4 SP #3

110 mph wind, 12.95 ft mean hgt, ASCE 7-98, CLOSED bldg, not located within 4.50 ft from roof edge, CAT II, EXP B, wind TC DL=2.8 psf, wind BC DL=2.2 psf.

Calculated horizontal deflection is 0.19" due to live load and 0.29" due to dead load.

Dead loads are stated on projected horizontal area basis.

(A) Continuous lateral bracing equally spaced on member.

Deflection meets L/360 live and L/240 total load. Creep increase factor for dead load is 1.50.

2 COMPLETE TRUSSES REQUIRED

Nailing Schedule: (10d_Common_(0.148"x3",_min.)_nails)
Top Chord: 1 Row @12.00" o.c.
Bot Chord: 1 Row @12.00" o.c.
Webs : 1 Row @ 4" o.c.
Use equal spacing between rows and stagger nails in each row to avoid splitting.

Right end vertical not exposed to wind pressure.

H = recommended connection based on manufacturer tested capacities and calculations. Conditions may exist that require different connections than indicated. Refer to manufacturer publication for additional information.

Calculated vertical deflection is 0.54" due to live load and 0.80" due to dead load at X = 14-0-4.

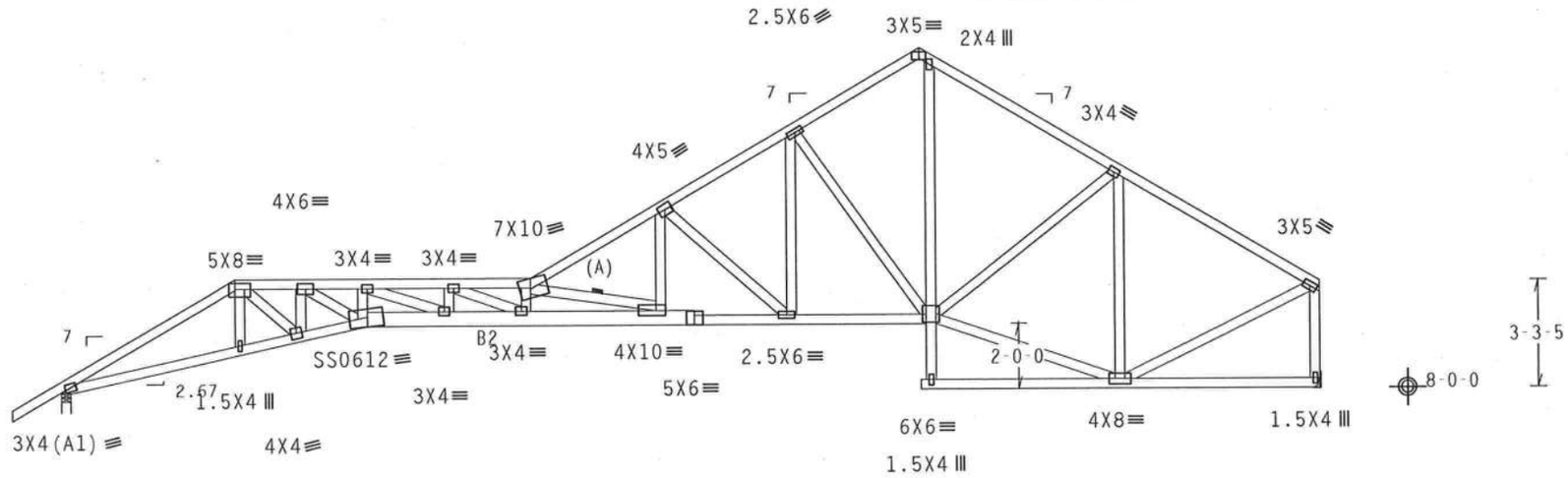

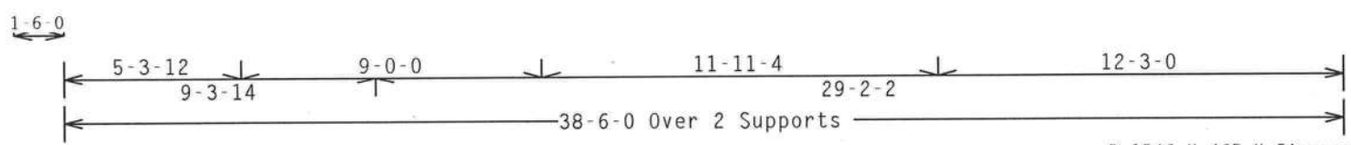

R=1630 U=489 W=3.5"

R=1546 U=465 H=Simpson HHUS26-2
w/ (6) 10d Common, 0.148"x3.0" nails in Truss
w/ (14) 10d Common, 0.148"x3.0" nails in Girder
Girder is (2)2X6 min. So.Pine

Design Crit: TPI-2002(STD)/FBC
PLT TYP. 18 Gauge HS,Wave Cq/RT=1.00(1.25)/10(0) 7.04.08 TY:1 FL/-/4/-/-/R/- Scale =.1875"/Ft.

ALPINE
Alpine Engineered Products, Inc.
1950 Marley Drive
Haines City, FL 33844
FL Certificate of Authorization # 567

WARNING TRUSSES REQUIRE EXTREME CARE IN FABRICATION, HANDLING, SHIPPING, INSTALLING AND BRACING. REFER TO BCSI 1-03 (BUILDING COMPONENT SAFETY INFORMATION), PUBLISHED BY TPI (TRUSS PLATE INSTITUTE, 583 D'ONOFRIO DR., SUITE 200, MADISON, WI 53719) AND WTCA (WOOD TRUSS COUNCIL OF AMERICA, 6300 ENTERPRISE LN, MADISON, WI 53719) FOR SAFETY PRACTICES PRIOR TO PERFORMING THESE FUNCTIONS. UNLESS OTHERWISE INDICATED, TOP CHORD SHALL HAVE PROPERLY ATTACHED STRUCTURAL PANELS AND BOTTOM CHORD SHALL HAVE A PROPERLY ATTACHED RIGID CEILING.

IMPORTANT FURNISH A COPY OF THIS DESIGN TO THE INSTALLATION CONTRACTOR. ALPINE ENGINEERED PRODUCTS, INC. SHALL NOT BE RESPONSIBLE FOR ANY DEVIATION FROM THIS DESIGN; ANY FAILURE TO BUILD THE TRUSS IN CONFORMANCE WITH TPI: OR FABRICATING, HANDLING, SHIPPING, INSTALLING & BRACING OF TRUSSES. DESIGN CONFORMS WITH APPLICABLE PROVISIONS OF NDS (NATIONAL DESIGN SPEC. BY AF&PA) AND TPI. ALPINE CONNECTOR PLATES ARE MADE OF 20/18/16GA (W,H/S/K) ASTM A653 GRADE 40/60 (W, K/H,S) GALV. STEEL. APPLY PLATES TO EACH FACE OF TRUSS AND, UNLESS OTHERWISE LOCATED ON THIS DESIGN, POSITION PER DRAWINGS 160A-Z. ANY INSPECTION OF PLATES FOLLOWED BY (1) SHALL BE PER ANNEX A3 OF TPI1-2002 SEC.3. A SEAL ON THIS DRAWING INDICATES ACCEPTANCE OF PROFESSIONAL ENGINEERING RESPONSIBILITY SOLELY FOR THE TRUSS COMPONENT DESIGN SHOWN. THE SUITABILITY AND USE OF THIS COMPONENT FOR ANY BUILDING IS THE RESPONSIBILITY OF THE BUILDING DESIGNER PER ANSI/TPI 1 SEC. 2.

ARTHUR R. FISHER LICENSE No. 59687 STATE OF FLORIDA PROFESSIONAL ENGINEER
Dec 07 '05

TC LL	20.0 PSF	REF	R487-- 25402
TC DL	10.0 PSF	DATE	12/07/05
BC DL	10.0 PSF	DRW	HCUSR487 05341027
BC LL	0.0 PSF	HC-ENG	JB/AF
TOT.LD.	40.0 PSF	SEQN-	17781
DUR.FAC.	1.25		
SPACING	24.0"	JREF-	1SSS487_Z09

(J-509-STANLEY CRAWFORD-48 TURKEY RUN AV2)

Top chord 2x4 SP #2 Dense
Bot chord 2x4 SP #2 Dense :B2 2x6 SP #1 Dense:
Webs 2x4 SP #3

Calculated horizontal deflection is 0.20" due to live load and 0.30" due to dead load.

H = recommended connection based on manufacturer tested capacities and calculations. Conditions may exist that require different connections than indicated. Refer to manufacturer publication for additional information.

Calculated vertical deflection is 0.43" due to live load and 0.63" due to dead load at X = 16-0-4.

110 mph wind, 12.95 ft mean hgt, ASCE 7-98, CLOSED bldg, not located within 4.50 ft from roof edge, CAT II, EXP B, wind TC DL=2.8 psf, wind BC DL=2.2 psf.

Right end vertical not exposed to wind pressure.

Dead loads are stated on projected horizontal area basis.

(A) Continuous lateral bracing equally spaced on member.

Deflection meets L/360 live and L/240 total load. Creep increase factor for dead load is 1.50.

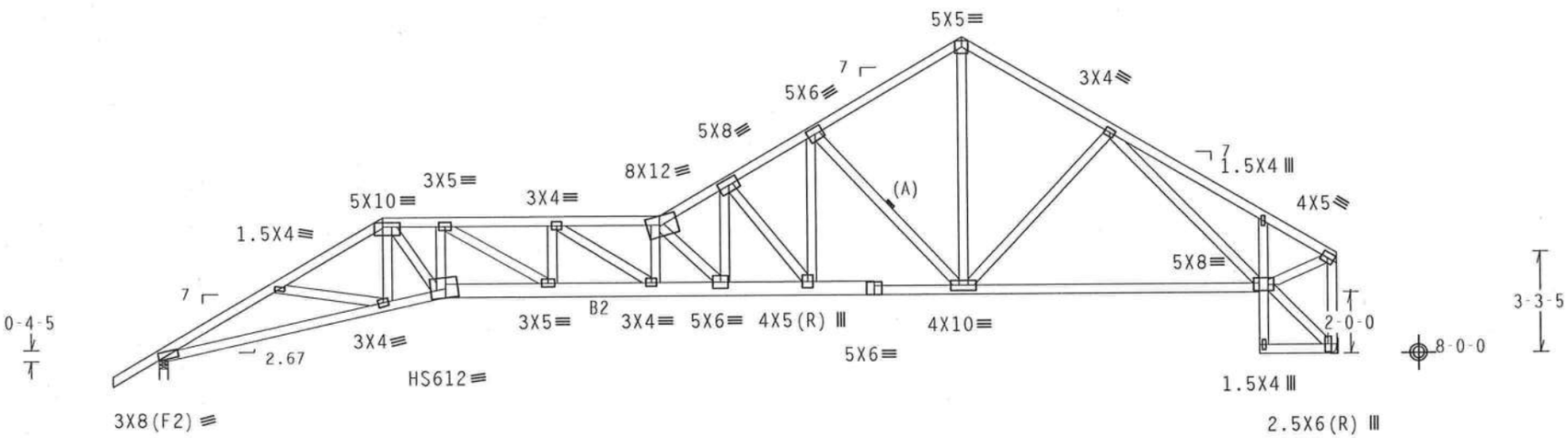

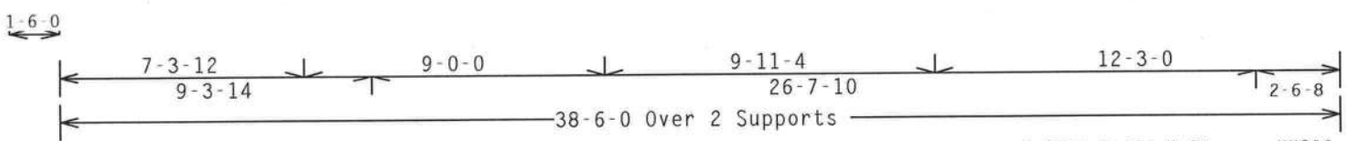

R=1632 U=490 W=3.5"

R=1544 U=464 H=Simpson HUS26
w/ (6) 10d Common, 0.148"x3.0" nails in Truss
w/ (14) 10d Common, 0.148"x3.0" nails in Girder
Girder is (2)2X6 min. So.Pine

Design Crit: TPI-2002(STD)/FBC
Cq/RT=1.00(1.25)/10(0) 7.04.0 QTY:1 FL/-/4/-/-/R/-

PLT TYP. 20 Gauge HS,Wave

Scale =.1875"/Ft.

ALPINE
Alpine Engineered Products, Inc.
1950 Marley Drive
Haines City, FL 33844
FL Certificate of Authorization # 567

WARNING TRUSSES REQUIRE EXTREME CARE IN FABRICATION, HANDLING, SHIPPING, INSTALLING AND BRACING. REFER TO BCSI 1-03 (BUILDING COMPONENT SAFETY INFORMATION), PUBLISHED BY TPI (TRUSS PLATE INSTITUTE, 583 D'ONOFRIO DR., SUITE 200, MADISON, WI 53719) AND WTCA (WOOD TRUSS COUNCIL OF AMERICA, 6300 ENTERPRISE LN, MADISON, WI 53719) FOR SAFETY PRACTICES PRIOR TO PERFORMING THESE FUNCTIONS. UNLESS OTHERWISE INDICATED, TOP CHORD SHALL HAVE PROPERLY ATTACHED STRUCTURAL PANELS AND BOTTOM CHORD SHALL HAVE A PROPERLY ATTACHED RIGID CEILING.

IMPORTANTFURNISH A COPY OF THIS DESIGN TO THE INSTALLATION CONTRACTOR. ALPINE ENGINEERED PRODUCTS, INC. SHALL NOT BE RESPONSIBLE FOR ANY DEVIATION FROM THIS DESIGN; ANY FAILURE TO BUILD THE TRUSS IN CONFORMANCE WITH TPI: OR FABRICATING, HANDLING, SHIPPING, INSTALLING & BRACING OF TRUSSES. DESIGN CONFORMS WITH APPLICABLE PROVISIONS OF NDS (NATIONAL DESIGN SPEC. BY AF&PA) AND TPI. ALPINE CONNECTOR PLATES ARE MADE OF 20/18/16GA (W,H/S/K) ASTM A653 GRADE 40/60 (W, K/H,S) GALV. STEEL. APPLY PLATES TO EACH FACE OF TRUSS AND, UNLESS OTHERWISE LOCATED ON THIS DESIGN, POSITION PER DRAWINGS 160A-2. ANY INSPECTION OF PLATES FOLLOWED BY (1) SHALL BE PER ANNEX A3 OF TPI1-2002 SEC.3. A SEAL ON THIS DRAWING INDICATES ACCEPTANCE OF PROFESSIONAL ENGINEERING RESPONSIBILITY SOLELY FOR THE TRUSS COMPONENT DESIGN SHOWN. THE SUITABILITY AND USE OF THIS COMPONENT FOR ANY BUILDING IS THE RESPONSIBILITY OF THE BUILDING DESIGNER PER ANSI/TPI 1 SEC. 2.

ARTHUR R. FISHER LICENSE No. 49687 STATE OF FLORIDA PROFESSIONAL ENGINEER

Dec 07 05

TC LL	20.0 PSF	REF R487-- 25403
TC DL	10.0 PSF	DATE 12/07/05
BC DL	10.0 PSF	DRW HCUSR487 05341028
BC LL	0.0 PSF	HC-ENG JB/AF
TOT.LD.	40.0 PSF	SEQN- 17772
DUR.FAC.	1.25	
SPACING	24.0"	JREF- 1SSS487_Z09

(5-509-STANLEY CRAWFORD-48 TURKEY RUN - AV3)

Top chord 2x4 SP #2 Dense
Bot chord 2x4 SP #2 Dense
Webs 2x4 SP #3 :W8 2x4 SP #2 Dense:

Calculated horizontal deflection is 0.13" due to live load and 0.19" due to dead load.

Deflection meets L/360 live and L/240 total load. Creep increase factor for dead load is 1.50.

110 mph wind, 12.95 ft mean hgt, ASCE 7-98, CLOSED bldg, not located within 4.50 ft from roof edge, CAT II, EXP B, wind TC DL=2.8 psf, wind BC DL=2.2 psf.

Dead loads are stated on projected horizontal area basis.

(A) Continuous lateral bracing equally spaced on member.

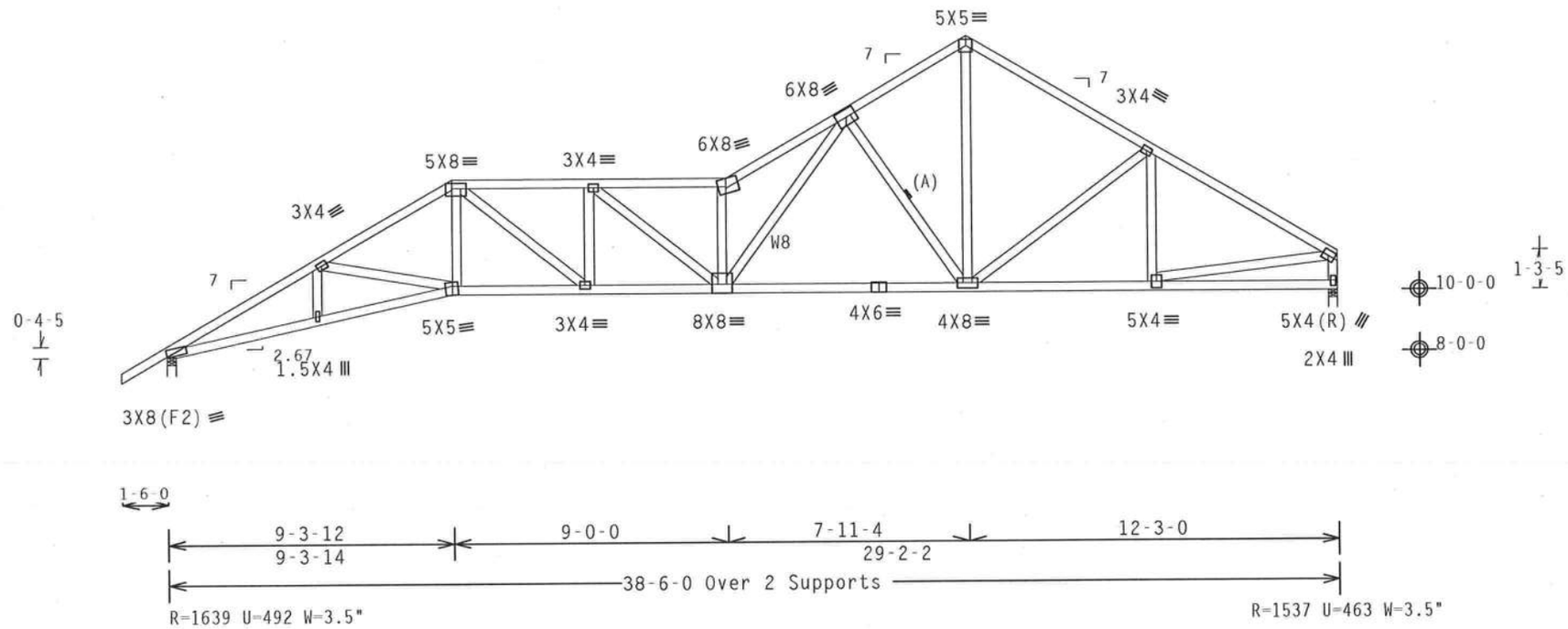

Design Crit: TPI-2002(STD)/FBC
Cq/RT=1.00(1.25)/10(0) 7.04.0 QTY:1 FL/-/4/-/-/R/- Scale =.1875"/Ft.

PLT TYP. Wave

ALPINE
Alpine Engineered Products, Inc.
1950 Marley Drive
Haines City, FL 33844
FL Certificate of Authorization # 567

WARNING TRUSSES REQUIRE EXTREME CARE IN FABRICATION, HANDLING, SHIPPING, INSTALLING AND BRACING. REFER TO BCSI 1-03 (BUILDING COMPONENT SAFETY INFORMATION), PUBLISHED BY TPI (TRUSS PLATE INSTITUTE, 583 D'ONOFRIO DR., SUITE 200, MADISON, WI 53719) AND WTCA (WOOD TRUSS COUNCIL OF AMERICA, 6300 ENTERPRISE LN, MADISON, WI 53719) FOR SAFETY PRACTICES PRIOR TO PERFORMING THESE FUNCTIONS. UNLESS OTHERWISE INDICATED, TOP CHORD SHALL HAVE PROPERLY ATTACHED STRUCTURAL PANELS AND BOTTOM CHORD SHALL HAVE A PROPERLY ATTACHED RIGID CEILING.

IMPORTANTFURNISH A COPY OF THIS DESIGN TO THE INSTALLATION CONTRACTOR. ALPINE ENGINEERED PRODUCTS, INC. SHALL NOT BE RESPONSIBLE FOR ANY DEVIATION FROM THIS DESIGN; ANY FAILURE TO BUILD THE TRUSS IN CONFORMANCE WITH TPI; OR FABRICATING, HANDLING, SHIPPING, INSTALLING & BRACING OF TRUSSES. DESIGN CONFORMS WITH APPLICABLE PROVISIONS OF NDS (NATIONAL DESIGN SPEC. BY AF&PA) AND TPI. ALPINE CONNECTOR PLATES ARE MADE OF 20/18/16GA (W,H/S/K) ASTM A653 GRADE 40/60 (W, K/H,S) GALV. STEEL. APPLY PLATES TO EACH FACE OF TRUSS AND, UNLESS OTHERWISE LOCATED ON THIS DESIGN, POSITION PER DRAWINGS 160A-Z. ANY INSPECTION OF PLATES FOLLOWED BY (1) SHALL BE PER ANNEX A3 OF TPI1-2002 SEC.3. A SEAL ON THIS DRAWING INDICATES ACCEPTANCE OF PROFESSIONAL ENGINEERING RESPONSIBILITY SOLELY FOR THE TRUSS COMPONENT DESIGN SHOWN. THE SUITABILITY AND USE OF THIS COMPONENT FOR ANY BUILDING IS THE RESPONSIBILITY OF THE BUILDING DESIGNER PER ANSI/TPI 1 SEC. 2.

ARTHUR R. FISHER
LICENSE
No.59687
STATE OF
FLORIDA
PROFESSIONAL ENGINEER
Dec 07 '05

TC LL	20.0 PSF	REF	R487-- 25404
TC DL	10.0 PSF	DATE	12/07/05
BC DL	10.0 PSF	DRW	HCUSR487 05341007
BC LL	0.0 PSF	HC-ENG	JB/AF *
TOT.LD.	40.0 PSF	SEQN-	17777
DUR.FAC.	1.25		
SPACING	24.0"	JREF-	1SSS487_Z09

(5-509-STANLEY CRAWFORD-48 TURKEY RUN - AV4)

Top chord 2x4 SP #2 Dense
Bot chord 2x4 SP #2 Dense
Webs 2x4 SP #3

Calculated horizontal deflection is 0.13" due to live load and 0.19" due to dead load.

Deflection meets L/360 live and L/240 total load. Creep increase factor for dead load is 1.50.

110 mph wind, 12.95 ft mean hgt, ASCE 7-98, CLOSED bldg, not located within 4.50 ft from roof edge, CAT II, EXP B, wind TC DL=2.8 psf, wind BC DL=2.2 psf.

Dead loads are stated on projected horizontal area basis.

(A) Continuous lateral bracing equally spaced on member.

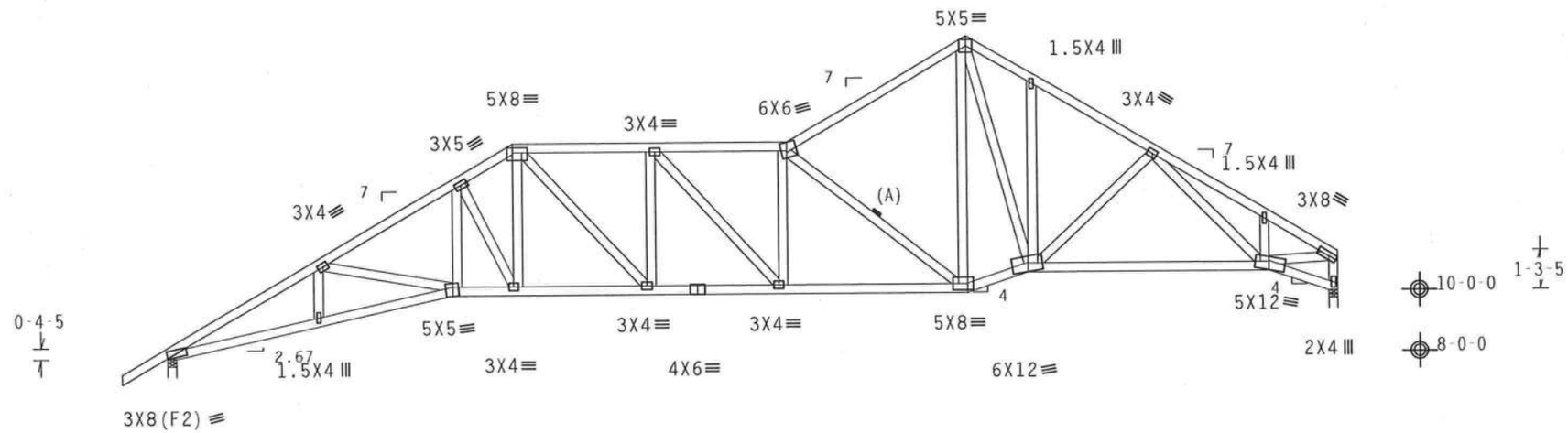

Design Crit: TPI-2002(STD)/FBC
Cq/RT=1.00(1.25)/10(0) 7.04.0 QTY:1 FL/-/4/-/-/R/- Scale =.1875"/Ft.

PLT TYP. Wave

ALPINE
Alpine Engineered Products, Inc.
1950 Marley Drive
Haines City, FL 33844
FL Certificate of Authorization # 567

WARNING TRUSSES REQUIRE EXTREME CARE IN FABRICATION, HANDLING, SHIPPING, INSTALLING AND BRACING. REFER TO BCSI 1-03 (BUILDING COMPONENT SAFETY INFORMATION), PUBLISHED BY TPI (TRUSS PLATE INSTITUTE, 583 D'ONOFRIO DR., SUITE 200, MADISON, WI 53719) AND WTCA (WOOD TRUSS COUNCIL OF AMERICA, 6300 ENTERPRISE LN, MADISON, WI 53719) FOR SAFETY PRACTICES PRIOR TO PERFORMING THESE FUNCTIONS. UNLESS OTHERWISE INDICATED, TOP CHORD SHALL HAVE PROPERLY ATTACHED STRUCTURAL PANELS AND BOTTOM CHORD SHALL HAVE A PROPERLY ATTACHED RIGID CEILING.

IMPORTANTFURNISH A COPY OF THIS DESIGN TO THE INSTALLATION CONTRACTOR. ALPINE ENGINEERED PRODUCTS, INC. SHALL NOT BE RESPONSIBLE FOR ANY DEVIATION FROM THIS DESIGN; ANY FAILURE TO BUILD THE TRUSS IN CONFORMANCE WITH TPI; OR FABRICATING, HANDLING, SHIPPING, INSTALLING & BRACING OF TRUSSES. DESIGN CONFORMS WITH APPLICABLE PROVISIONS OF NDS (NATIONAL DESIGN SPEC, BY AF&PA) AND TPI. ALPINE CONNECTOR PLATES ARE MADE OF 20/18/16GA (W,H/S/K) ASTM A653 GRADE 40/60 (W, K/H,S) GALV. STEEL. APPLY PLATES TO EACH FACE OF TRUSS AND, UNLESS OTHERWISE LOCATED ON THIS DESIGN, POSITION PER DRAWINGS 160A-Z. ANY INSPECTION OF PLATES FOLLOWED BY (1) SHALL BE PER ANNEX A3 OF TPI1-2002 SEC.3. A SEAL ON THIS DRAWING INDICATES ACCEPTANCE OF PROFESSIONAL ENGINEERING RESPONSIBILITY SOLELY FOR THE TRUSS COMPONENT DESIGN SHOWN. THE SUITABILITY AND USE OF THIS COMPONENT FOR ANY BUILDING IS THE RESPONSIBILITY OF THE BUILDING DESIGNER PER ANSI/TPI 1 SEC. 2.

ARTHUR R. FISHER
LICENSE
No. 59687
STATE OF FLORIDA
PROFESSIONAL ENGINEER

Dec 07 '05

TC LL	20.0 PSF	REF	R487-- 25405
TC DL	10.0 PSF	DATE	12/07/05
BC DL	10.0 PSF	DRW	HCUSR487 05341029
BC LL	0.0 PSF	HC-ENG	JB/AF
TOT.LD.	40.0 PSF	SEQN-	17779
DUR.FAC.	1.25		
SPACING	24.0"	JREF-	1SSS487_Z09

(5-509-STANLEY CRAWFORD-48 TURKEY RUN AVS)

Top chord 2x4 SP #2 Dense
Bot chord 2x4 SP #2 Dense
Webs 2x4 SP #3

Calculated horizontal deflection is 0.13" due to live load and 0.19" due to dead load.

Deflection meets L/360 live and L/240 total load. Creep increase factor for dead load is 1.50.

110 mph wind, 12.95 ft mean hgt, ASCE 7-98, CLOSED bldg, not located within 4.50 ft from roof edge, CAT II, EXP B, wind TC DL=2.8 psf, wind BC DL=2.2 psf.

Dead loads are stated on projected horizontal area basis.

(A) Continuous lateral bracing equally spaced on member.

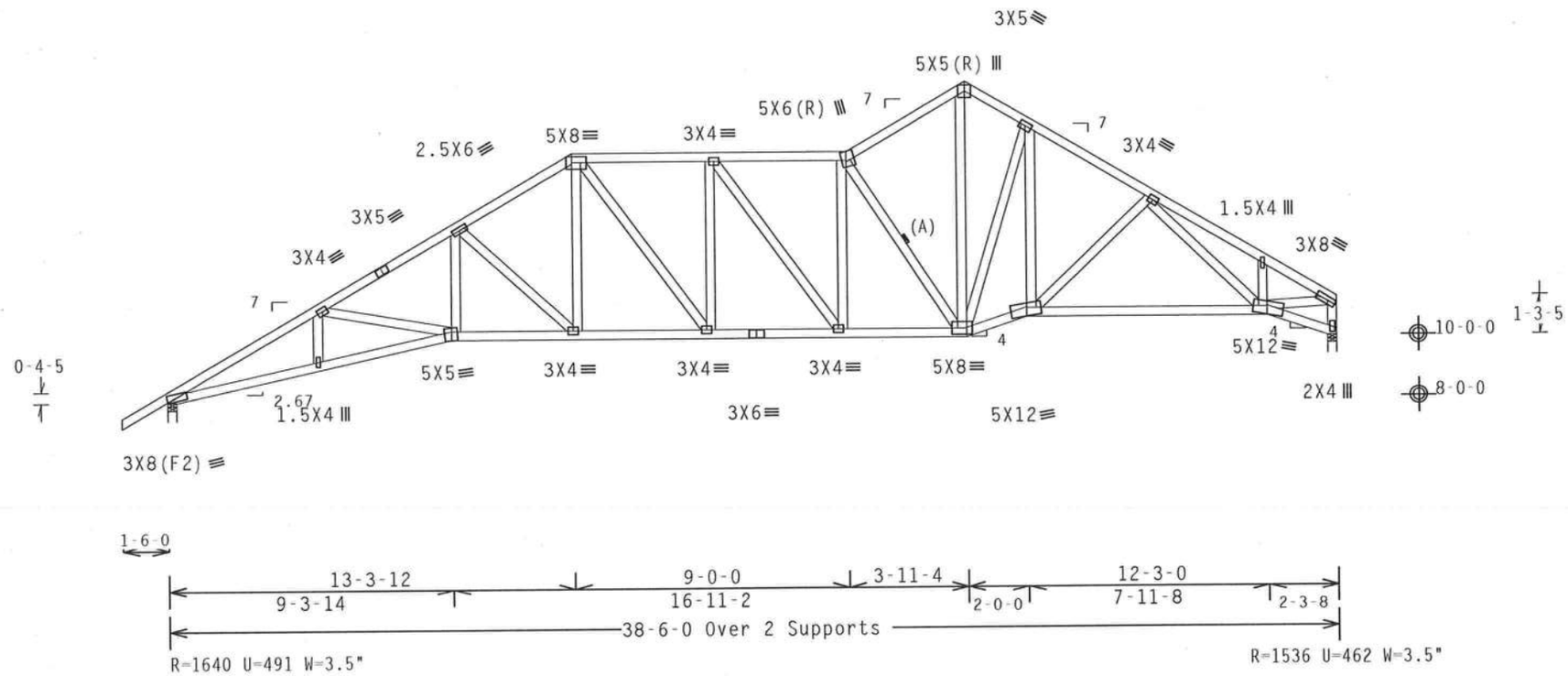

Design Crit: TPI-2002(STD)/FBC
Cq/RT=1.00(1.25)/10(0) 7.04.08 ... Y:1 FL/-/4/-/-/R/-

PLT TYP. Wave

Scale =.1875"/Ft.

ALPINE
Alpine Engineered Products, Inc.
1950 Marley Drive
Haines City, FL 33844
FL Certificate of Authorization # 567

WARNING TRUSSES REQUIRE EXTREME CARE IN FABRICATION, HANDLING, SHIPPING, INSTALLING AND BRACING. REFER TO BCSI 1-03 (BUILDING COMPONENT SAFETY INFORMATION), PUBLISHED BY TPI (TRUSS PLATE INSTITUTE, 583 D'ONOFRIO DR., SUITE 200, MADISON, WI 53719) AND WTCA (WOOD TRUSS COUNCIL OF AMERICA, 6300 ENTERPRISE LN, MADISON, WI 53719) FOR SAFETY PRACTICES PRIOR TO PERFORMING THESE FUNCTIONS. UNLESS OTHERWISE INDICATED, TOP CHORD SHALL HAVE PROPERLY ATTACHED STRUCTURAL PANELS AND BOTTOM CHORD SHALL HAVE A PROPERLY ATTACHED RIGID CEILING.

IMPORTANT FURNISH A COPY OF THIS DESIGN TO THE INSTALLATION CONTRACTOR. ALPINE ENGINEERED PRODUCTS, INC. SHALL NOT BE RESPONSIBLE FOR ANY DEVIATION FROM THIS DESIGN; ANY FAILURE TO BUILD THE TRUSS IN CONFORMANCE WITH TPI; OR FABRICATING, HANDLING, SHIPPING, INSTALLING & BRACING OF TRUSSES. DESIGN CONFORMS WITH APPLICABLE PROVISIONS OF NDS (NATIONAL DESIGN SPEC. BY AF&PA) AND TPI. ALPINE CONNECTOR PLATES ARE MADE OF 20/18/16GA (W,H/S/K) ASTM A653 GRADE 40/60 (W, K/H,S) GALV. STEEL. APPLY PLATES TO EACH FACE OF TRUSS AND, UNLESS OTHERWISE LOCATED ON THIS DESIGN, POSITION PER DRAWINGS 160A-Z. ANY INSPECTION OF PLATES FOLLOWED BY (1) SHALL BE PER ANNEX A3 OF TPI1-2002 SEC.3. A SEAL ON THIS DRAWING INDICATES ACCEPTANCE OF PROFESSIONAL ENGINEERING RESPONSIBILITY SOLELY FOR THE TRUSS COMPONENT DESIGN SHOWN. THE SUITABILITY AND USE OF THIS COMPONENT FOR ANY BUILDING IS THE RESPONSIBILITY OF THE BUILDING DESIGNER PER ANSI/TPI 1 SEC. 2.

ARTHUR R. FISHER
LICENSE
No. 59687
STATE OF FLORIDA
PROFESSIONAL ENGINEER

Dec 07 '05

TC LL	20.0 PSF	REF	R487-- 25406
TC DL	10.0 PSF	DATE	12/07/05
BC DL	10.0 PSF	DRW	HCUSR487 05341030
BC LL	0.0 PSF	HC-ENG	JB/AF
TOT.LD.	40.0 PSF	SEQN-	17768
DUR.FAC.	1.25		
SPACING	24.0"	JREF-	1SSS487_Z09

(5-509-STANLEY CRAWFORD-48-TURKEY RUN - AV6)

Top chord 2x4 SP #2 Dense
Bot chord 2x4 SP #2 Dense
Webs 2x4 SP #3

Calculated horizontal deflection is 0.15" due to live load and 0.22" due to dead load.

Deflection meets L/360 live and L/240 total load. Creep increase factor for dead load is 1.50.

110 mph wind, 12.95 ft mean hgt, ASCE 7-98, CLOSED bldg, not located within 4.50 ft from roof edge, CAT II, EXP B, wind TC DL=2.8 psf, wind BC DL=2.2 psf.

Dead loads are stated on projected horizontal area basis.

(A) Continuous lateral bracing equally spaced on member.

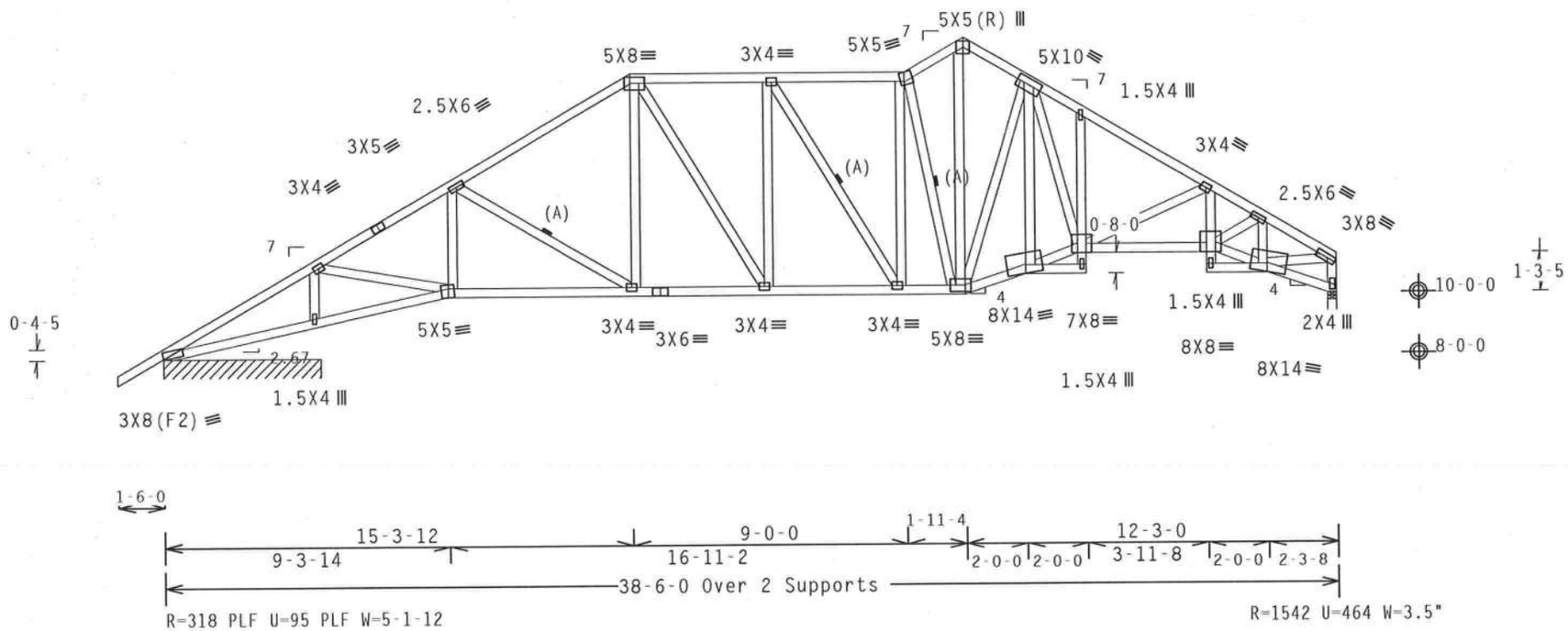

Design Crit: TPI-2002(STD)/FBC
Cq/RT=1.00(1.25)/10(0) 7.04.08 QTY:1 FL/-/4/-/-/R/- Scale =.1875"/Ft.

PLT TYP. Wave

ALPINE
Alpine Engineered Products, Inc.
1950 Marley Drive
Haines City, FL 33844
FL Certificate of Authorization # 567

WARNING TRUSSES REQUIRE EXTREME CARE IN FABRICATION, HANDLING, SHIPPING, INSTALLING AND BRACING. REFER TO BCSI 1-03 (BUILDING COMPONENT SAFETY INFORMATION), PUBLISHED BY TPI (TRUSS PLATE INSTITUTE, 583 D'ONOFRIO DR., SUITE 200, MADISON, WI 53719) AND WTCA (WOOD TRUSS COUNCIL OF AMERICA, 6300 ENTERPRISE LN, MADISON, WI 53719) FOR SAFETY PRACTICES PRIOR TO PERFORMING THESE FUNCTIONS. UNLESS OTHERWISE INDICATED, TOP CHORD SHALL HAVE PROPERLY ATTACHED STRUCTURAL PANELS AND BOTTOM CHORD SHALL HAVE A PROPERLY ATTACHED RIGID CEILING.

IMPORTANT FURNISH A COPY OF THIS DESIGN TO THE INSTALLATION CONTRACTOR. ALPINE ENGINEERED PRODUCTS, INC. SHALL NOT BE RESPONSIBLE FOR ANY DEVIATION FROM THIS DESIGN; ANY FAILURE TO BUILD THE TRUSS IN CONFORMANCE WITH TPI; OR FABRICATING, HANDLING, SHIPPING, INSTALLING & BRACING OF TRUSSES. DESIGN CONFORMS WITH APPLICABLE PROVISIONS OF NDS (NATIONAL DESIGN SPEC. BY AF&PA) AND TPI. ALPINE CONNECTOR PLATES ARE MADE OF 20/18/16GA (W,H/S/K) ASTM A653 GRADE 40/60 (W, K/H,S) GALV. STEEL. APPLY PLATES TO EACH FACE OF TRUSS AND, UNLESS OTHERWISE LOCATED ON THIS DESIGN, POSITION PER DRAWINGS 160A-Z. ANY INSPECTION OF PLATES FOLLOWED BY (1) SHALL BE PER ANNEX A3 OF TPI1-2002 SEC.3. A SEAL ON THIS DRAWING INDICATES ACCEPTANCE OF PROFESSIONAL ENGINEERING RESPONSIBILITY SOLELY FOR THE TRUSS COMPONENT DESIGN SHOWN. THE SUITABILITY AND USE OF THIS COMPONENT FOR ANY BUILDING IS THE RESPONSIBILITY OF THE BUILDING DESIGNER PER ANSI/TPI 1 SEC. 2.

ARTHUR R. FISHER
LICENSE
No. 59687
STATE OF FLORIDA
PROFESSIONAL ENGINEER
Dec 07 '05

TC LL	20.0 PSF	REF	R487-- 25407
TC DL	10.0 PSF	DATE	12/07/05
BC DL	10.0 PSF	DRW	HCUSR487 05341031
BC LL	0.0 PSF	HC-ENG	JB/AF
TOT.LD.	40.0 PSF	SEQN-	17780
DUR.FAC.	1.25		
SPACING	24.0"	JREF-	1SSS487_Z09

(5-509-STANLEY CRAWFORD-48 TURKEY RUN - HM78)

Top chord 2x6 SP #2 :T1 2x4 SP #2 Dense:
Bot chord 2x6 SP #2
Webs 2x4 SP #3 :W7 2x4 SP #2 Dense:

Dead loads are stated on projected horizontal area basis.

H = recommended connection based on manufacturer tested capacities and calculations. Conditions may exist that require different connections than indicated. Refer to manufacturer publication for additional information.

Deflection meets L/360 live and L/240 total load. Creep increase factor for dead load is 1.50.

110 mph wind, 15.00 ft mean hgt, ASCE 7-98, CLOSED bldg, Located anywhere in roof, CAT II, EXP B, wind TC DL=2.8 psf, wind BC DL=2.2 psf.

Right end vertical not exposed to wind pressure.

(A) Continuous lateral bracing equally spaced on member.

#1 hip supports 7-0-0 jacks with no webs.

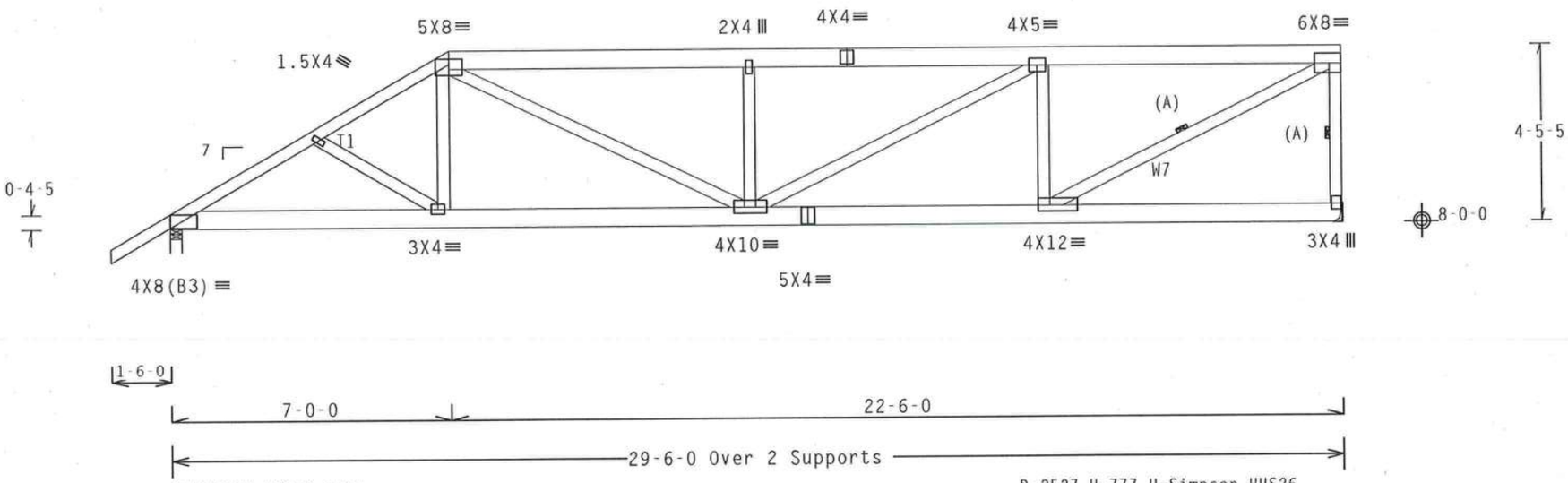

R=2416 U=760 W=3.5"

R=2527 U=777 H=Simpson HUS26
w/ (6) 10d Common, 0.148"x3.0" nails in Truss
w/ (14) 10d Common, 0.148"x3.0" nails in Girder
Girder is (2)2X8 min. So.Pine

Design Crit: TPI-2002(STD)/FBC
Cq/RT=1.00(1.25)/10(0) 7.04.08 QTY:1 FL/-/4/-/-/R/-

PLT TYP. Wave

Scale =.25"/Ft.

ALPINE
Alpine Engineered Products, Inc.
1950 Marley Drive
Haines City, FL 33844
FL Certificate of Authorization # 567

WARNING TRUSSES REQUIRE EXTREME CARE IN FABRICATION, HANDLING, SHIPPING, INSTALLING AND BRACING. REFER TO BCSI 1-03 (BUILDING COMPONENT SAFETY INFORMATION), PUBLISHED BY TPI (TRUSS PLATE INSTITUTE, 583 D'ONOFRIO DR., SUITE 200, MADISON, WI 53719) AND WTCA (WOOD TRUSS COUNCIL OF AMERICA, 6300 ENTERPRISE LN, MADISON, WI 53719) FOR SAFETY PRACTICES PRIOR TO PERFORMING THESE FUNCTIONS. UNLESS OTHERWISE INDICATED, TOP CHORD SHALL HAVE PROPERLY ATTACHED STRUCTURAL PANELS AND BOTTOM CHORD SHALL HAVE A PROPERLY ATTACHED RIGID CEILING.

IMPORTANTFURNISH A COPY OF THIS DESIGN TO THE INSTALLATION CONTRACTOR. ALPINE ENGINEERED PRODUCTS, INC. SHALL NOT BE RESPONSIBLE FOR ANY DEVIATION FROM THIS DESIGN; ANY FAILURE TO BUILD THE TRUSS IN CONFORMANCE WITH TPI; OR FABRICATING, HANDLING, SHIPPING, INSTALLING & BRACING OF TRUSSES. DESIGN CONFORMS WITH APPLICABLE PROVISIONS OF NDS (NATIONAL DESIGN SPEC, BY AF&PA) AND TPI. ALPINE CONNECTOR PLATES ARE MADE OF 20/18/16GA (W,H/S/K) ASTM A653 GRADE 40/60 (W, K/H,S) GALV. STEEL. APPLY PLATES TO EACH FACE OF TRUSS AND, UNLESS OTHERWISE LOCATED ON THIS DESIGN, POSITION PER DRAWINGS 160A-Z. ANY INSPECTION OF PLATES FOLLOWED BY (1) SHALL BE PER ANNEX A3 OF TPI1-2002 SEC.3. A SEAL ON THIS DRAWING INDICATES ACCEPTANCE OF PROFESSIONAL ENGINEERING RESPONSIBILITY SOLELY FOR THE TRUSS COMPONENT DESIGN SHOWN. THE SUITABILITY AND USE OF THIS COMPONENT FOR ANY BUILDING IS THE RESPONSIBILITY OF THE BUILDING DESIGNER PER ANSI/TPI 1 SEC. 2.

ARTHUR R. FISHER
LICENSE
No.59687
STATE OF FLORIDA
PROFESSIONAL ENGINEER

Dec 07 '05

TC LL	20.0 PSF	REF	R487-- 25408
TC DL	10.0 PSF	DATE	12/07/05
BC DL	10.0 PSF	DRW	HCUSR487 05341032
BC LL	0.0 PSF	HC-ENG	JB/AF
TOT.LD.	40.0 PSF	SEQN-	17742
DUR.FAC.	1.25		
SPACING	24.0"	JREF-	1SSS487_Z09

(5-509-STANLEY CRAWFORD-48 TURKEY RUN HM9B)

Top chord 2x4 SP #2 Dense
Bot chord 2x4 SP #2 Dense
Webs 2x4 SP #3

Dead loads are stated on projected horizontal area basis.

H = recommended connection based on manufacturer tested capacities and calculations. Conditions may exist that require different connections than indicated. Refer to manufacturer publication for additional information.

110 mph wind, 10.55 ft mean hgt, ASCE 7-98, CLOSED bldg, not located within 4.50 ft from roof edge, CAT II, EXP B, wind TC DL=2.8 psf, wind BC DL=2.2 psf.

Right end vertical not exposed to wind pressure.

(A) Continuous lateral bracing equally spaced on member.

Deflection meets L/360 live and L/240 total load. Creep increase factor for dead load is 1.50.

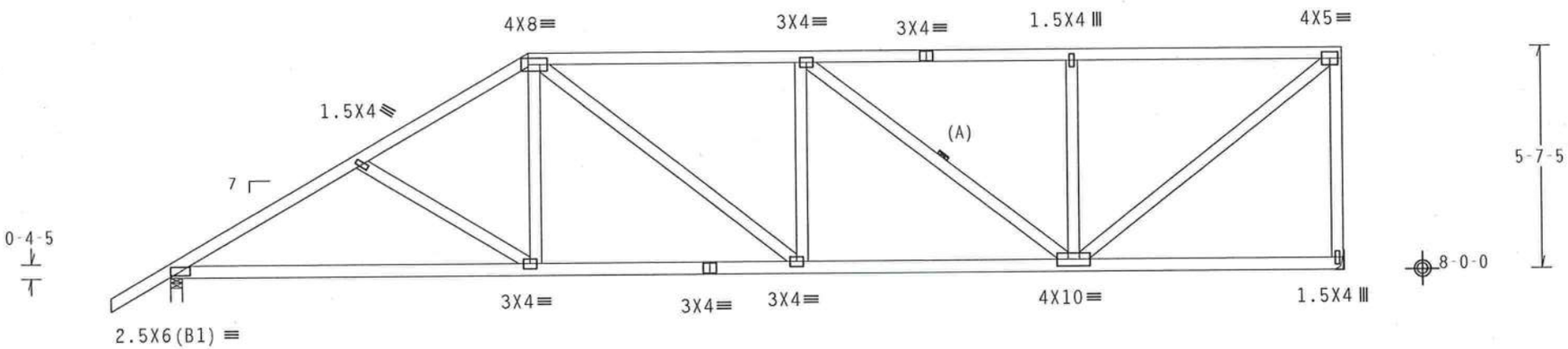

1-6-0

9-0-0 | 20-6-0

29-6-0 Over 2 Supports

R=1285 U=379 W=3.5"

R=1171 U=375 H=Simpson HUS26
w/ (6) 10d Common, 0.148"x3.0" nails in Truss
w/ (14) 10d Common, 0.148"x3.0" nails in Girder
Girder is (2)2X6 min. So.Pine

Design Crit: TPI-2002(STD)/FBC
Cq/RT=1.00(1.25)/10(0) 7.04.0[illegible] QTY:1 FL/-/4/-/-/R/-

PLT TYP. Wave

Scale =.25"/Ft.

ALPINE
Alpine Engineered Products, Inc.
1950 Marley Drive
Haines City, FL 33844
FL Certificate of Authorization # 567

WARNING TRUSSES REQUIRE EXTREME CARE IN FABRICATION, HANDLING, SHIPPING, INSTALLING AND BRACING. REFER TO BCSI 1-03 (BUILDING COMPONENT SAFETY INFORMATION), PUBLISHED BY TPI (TRUSS PLATE INSTITUTE, 583 D'ONOFRIO DR., SUITE 200, MADISON, WI 53719) AND WTCA (WOOD TRUSS COUNCIL OF AMERICA, 6300 ENTERPRISE LN, MADISON, WI 53719) FOR SAFETY PRACTICES PRIOR TO PERFORMING THESE FUNCTIONS. UNLESS OTHERWISE INDICATED, TOP CHORD SHALL HAVE PROPERLY ATTACHED STRUCTURAL PANELS AND BOTTOM CHORD SHALL HAVE A PROPERLY ATTACHED RIGID CEILING.

IMPORTANTFURNISH A COPY OF THIS DESIGN TO THE INSTALLATION CONTRACTOR. ALPINE ENGINEERED PRODUCTS, INC. SHALL NOT BE RESPONSIBLE FOR ANY DEVIATION FROM THIS DESIGN; ANY FAILURE TO BUILD THE TRUSS IN CONFORMANCE WITH TPI; OR FABRICATING, HANDLING, SHIPPING, INSTALLING & BRACING OF TRUSSES. DESIGN CONFORMS WITH APPLICABLE PROVISIONS OF NDS (NATIONAL DESIGN SPEC, BY AF&PA) AND TPI. ALPINE CONNECTOR PLATES ARE MADE OF 20/18/16GA (W,H/S/K) ASTM A653 GRADE 40/60 (W, K/H,S) GALV. STEEL. APPLY PLATES TO EACH FACE OF TRUSS AND, UNLESS OTHERWISE LOCATED ON THIS DESIGN, POSITION PER DRAWINGS 160A-Z. ANY INSPECTION OF PLATES FOLLOWED BY (1) SHALL BE PER ANNEX A3 OF TPI1-2002 SEC.3. A SEAL ON THIS DRAWING INDICATES ACCEPTANCE OF PROFESSIONAL ENGINEERING RESPONSIBILITY SOLELY FOR THE TRUSS COMPONENT DESIGN SHOWN. THE SUITABILITY AND USE OF THIS COMPONENT FOR ANY BUILDING IS THE RESPONSIBILITY OF THE BUILDING DESIGNER PER ANSI/TPI 1 SEC. 2.

ARTHUR R. FISHER
LICENSE
No. 39687
STATE OF FLORIDA
PROFESSIONAL ENGINEER

Dec 0[illegible] 05

TC LL	20.0 PSF	REF	R487-- 25409
TC DL	10.0 PSF	DATE	12/07/05
BC DL	10.0 PSF	DRW	HCUSR487 05341033
BC LL	0.0 PSF	HC-ENG	JB/AF
TOT.LD.	40.0 PSF	SEQN-	17743
DUR.FAC.	1.25		
SPACING	24.0"	JREF-	1SSS487_Z09

(5-509-STANLEY CRAWFORD-46-TURKEY RUN - HM118)

Top chord 2x4 SP #2 Dense
Bot chord 2x4 SP #2 Dense
Webs 2x4 SP #3

Dead loads are stated on projected horizontal area basis.

H = recommended connection based on manufacturer tested capacities and calculations. Conditions may exist that require different connections than indicated. Refer to manufacturer publication for additional information.

110 mph wind, 11.13 ft mean hgt, ASCE 7-98, CLOSED bldg, not located within 4.50 ft from roof edge, CAT II, EXP B, wind TC DL=2.8 psf, wind BC DL=2.2 psf.

Right end vertical not exposed to wind pressure.

(A) Continuous lateral bracing equally spaced on member.

Deflection meets L/360 live and L/240 total load. Creep increase factor for dead load is 1.50.

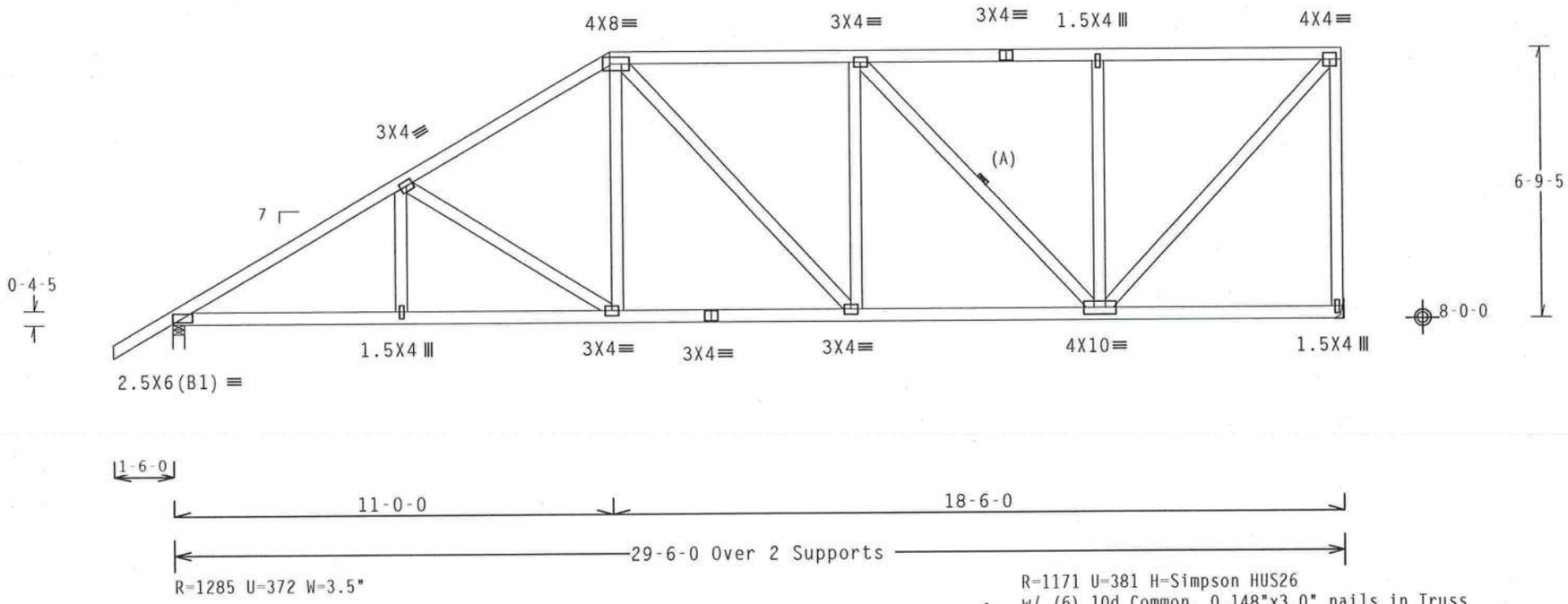

Design Crit: TPI-2002(STD)/FBC
Cq/RT=1.00(1.25)/10(0) 7.04.0 QTY:1 FL/-/4/-/-/R/-

PLT TYP. Wave

Scale =.25"/Ft.

ALPINE

Alpine Engineered Products, Inc.
1950 Marley Drive
Haines City, FL 33844
FL Certificate of Authorization # 567

WARNING TRUSSES REQUIRE EXTREME CARE IN FABRICATION, HANDLING, SHIPPING, INSTALLING AND BRACING. REFER TO BCSI 1-03 (BUILDING COMPONENT SAFETY INFORMATION), PUBLISHED BY TPI (TRUSS PLATE INSTITUTE, 583 D'ONOFRIO DR., SUITE 200, MADISON, WI 53719) AND WTCA (WOOD TRUSS COUNCIL OF AMERICA, 6300 ENTERPRISE LN, MADISON, WI 53719) FOR SAFETY PRACTICES PRIOR TO PERFORMING THESE FUNCTIONS. UNLESS OTHERWISE INDICATED, TOP CHORD SHALL HAVE PROPERLY ATTACHED STRUCTURAL PANELS AND BOTTOM CHORD SHALL HAVE A PROPERLY ATTACHED RIGID CEILING.

IMPORTANTFURNISH A COPY OF THIS DESIGN TO THE INSTALLATION CONTRACTOR. ALPINE ENGINEERED PRODUCTS, INC. SHALL NOT BE RESPONSIBLE FOR ANY DEVIATION FROM THIS DESIGN; ANY FAILURE TO BUILD THE TRUSS IN CONFORMANCE WITH TPI; OR FABRICATING, HANDLING, SHIPPING, INSTALLING & BRACING OF TRUSSES. DESIGN CONFORMS WITH APPLICABLE PROVISIONS OF NDS (NATIONAL DESIGN SPEC. BY AF&PA) AND TPI. ALPINE CONNECTOR PLATES ARE MADE OF 20/18/16GA (W,H/S/K) ASTM A653 GRADE 40/60 (W, K/H,S) GALV. STEEL. APPLY PLATES TO EACH FACE OF TRUSS AND, UNLESS OTHERWISE LOCATED ON THIS DESIGN, POSITION PER DRAWINGS 160A-Z. ANY INSPECTION OF PLATES FOLLOWED BY (I) SHALL BE PER ANNEX A3 OF TPI1-2002 SEC.3. A SEAL ON THIS DRAWING INDICATES ACCEPTANCE OF PROFESSIONAL ENGINEERING RESPONSIBILITY SOLELY FOR THE TRUSS COMPONENT DESIGN SHOWN. THE SUITABILITY AND USE OF THIS COMPONENT FOR ANY BUILDING IS THE RESPONSIBILITY OF THE BUILDING DESIGNER PER ANSI/TPI 1 SEC. 2.

ARTHUR R. FISHER
LICENSE
No. 59687
STATE OF FLORIDA
PROFESSIONAL ENGINEER

Dec 07 '05

TC LL	20.0 PSF	REF	R487-- 25410
TC DL	10.0 PSF	DATE	12/07/05
BC DL	10.0 PSF	DRW	HCUSR487 05341034
BC LL	0.0 PSF	HC-ENG	JB/AF
TOT.LD.	40.0 PSF	SEQN-	17744
DUR.FAC.	1.25		
SPACING	24.0"	JREF-	1SSS487_Z09

(5-509-STANLEY CRAWFORD-48 TURKEY RUN - H13B)

Top chord 2x4 SP #2 Dense
Bot chord 2x4 SP #2 Dense
Webs 2x4 SP #3

Dead loads are stated on projected horizontal area basis.

H = recommended connection based on manufacturer tested capacities and calculations. Conditions may exist that require different connections than indicated. Refer to manufacturer publication for additional information.

110 mph wind, 11.71 ft mean hgt, ASCE 7-98, CLOSED bldg, not located within 4.50 ft from roof edge, CAT II, EXP B, wind TC DL=2.8 psf, wind BC DL=2.2 psf.

Right end vertical not exposed to wind pressure.

(A) Continuous lateral bracing equally spaced on member.

Deflection meets L/360 live and L/240 total load. Creep increase factor for dead load is 1.50.

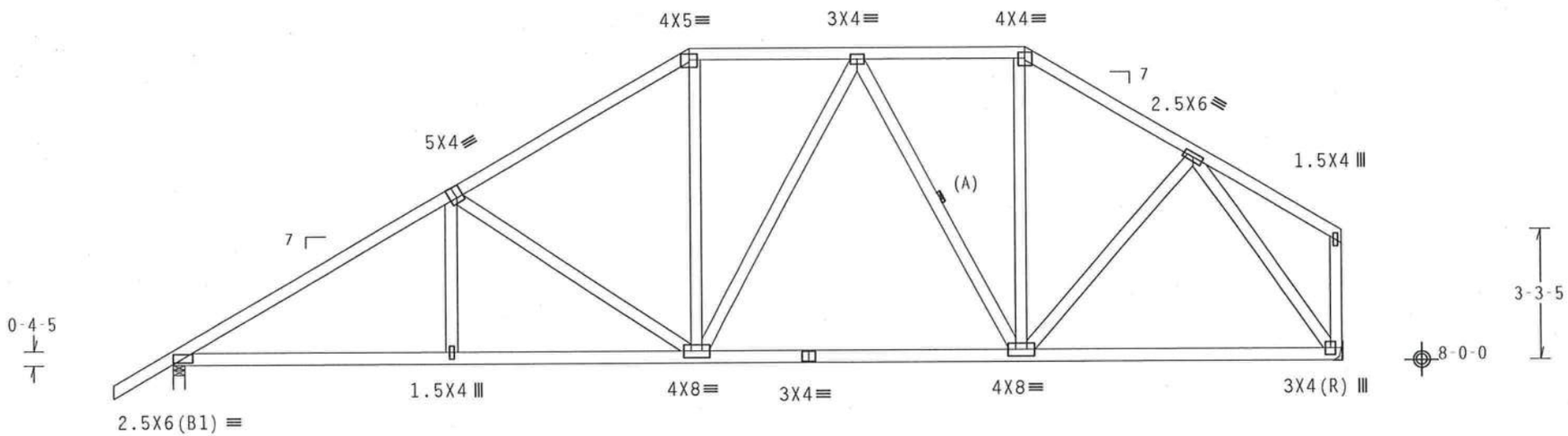

R=1282 U=385 W=3.5"

R=1174 U=358 H=Simpson HUS26
w/ (6) 10d Common, 0.148"x3.0" nails in Truss
w/ (14) 10d Common, 0.148"x3.0" nails in Girder
Girder is (2)2X6 min. So.Pine

Design Crit: TPI-2002(STD)/FBC
Cq/RT=1.00(1.25)/10(0) 7.04.0[illegible] TY:1 FL/-/4/-/-/R/-

PLT TYP. Wave

Scale =.25"/Ft.

ALPINE
Alpine Engineered Products, Inc.
1950 Marley Drive
Haines City, FL 33844
FL Certificate of Authorization # 567

WARNING TRUSSES REQUIRE EXTREME CARE IN FABRICATION, HANDLING, SHIPPING, INSTALLING AND BRACING. REFER TO BCSI 1-03 (BUILDING COMPONENT SAFETY INFORMATION), PUBLISHED BY TPI (TRUSS PLATE INSTITUTE, 583 D'ONOFRIO DR., SUITE 200, MADISON, WI 53719) AND WTCA (WOOD TRUSS COUNCIL OF AMERICA, 6300 ENTERPRISE LN, MADISON, WI 53719) FOR SAFETY PRACTICES PRIOR TO PERFORMING THESE FUNCTIONS. UNLESS OTHERWISE INDICATED, TOP CHORD SHALL HAVE PROPERLY ATTACHED STRUCTURAL PANELS AND BOTTOM CHORD SHALL HAVE A PROPERLY ATTACHED RIGID CEILING.

IMPORTANTFURNISH A COPY OF THIS DESIGN TO THE INSTALLATION CONTRACTOR. ALPINE ENGINEERED PRODUCTS, INC. SHALL NOT BE RESPONSIBLE FOR ANY DEVIATION FROM THIS DESIGN; ANY FAILURE TO BUILD THE TRUSS IN CONFORMANCE WITH TPI; OR FABRICATING, HANDLING, SHIPPING, INSTALLING & BRACING OF TRUSSES. DESIGN CONFORMS WITH APPLICABLE PROVISIONS OF NDS (NATIONAL DESIGN SPEC. BY AF&PA) AND TPI. ALPINE CONNECTOR PLATES ARE MADE OF 20/18/16GA (W,H/S/K) ASTM A653 GRADE 40/60 (W, K/H,S) GALV. STEEL. APPLY PLATES TO EACH FACE OF TRUSS AND, UNLESS OTHERWISE LOCATED ON THIS DESIGN, POSITION PER DRAWINGS 160A-Z. ANY INSPECTION OF PLATES FOLLOWED BY (1) SHALL BE PER ANNEX A3 OF TPI1-2002 SEC.3. A SEAL ON THIS DRAWING INDICATES ACCEPTANCE OF PROFESSIONAL ENGINEERING RESPONSIBILITY SOLELY FOR THE TRUSS COMPONENT DESIGN SHOWN. THE SUITABILITY AND USE OF THIS COMPONENT FOR ANY BUILDING IS THE RESPONSIBILITY OF THE BUILDING DESIGNER PER ANSI/TPI 1 SEC. 2.

ARTHUR R. FISHER
LICENSE
No.59687
STATE OF FLORIDA
PROFESSIONAL ENGINEER

DEC 07 '05

TC LL	20.0 PSF	REF	R487-- 25411
TC DL	10.0 PSF	DATE	12/07/05
BC DL	10.0 PSF	DRW	HCUSR487 05341035
BC LL	0.0 PSF	HC-ENG	JB/AF
TOT.LD.	40.0 PSF	SEQN-	17745
DUR.FAC.	1.25		
SPACING	24.0"	JREF-	1SSS487_Z09

(5-509-STANLEY CRAWFORD-48 TURKEY RUN - H15B)

Top chord 2x4 SP #2 Dense
Bot chord 2x4 SP #2 Dense
Webs 2x4 SP #3

Dead loads are stated on projected horizontal area basis.

H = recommended connection based on manufacturer tested capacities and calculations. Conditions may exist that require different connections than indicated. Refer to manufacturer publication for additional information.

110 mph wind, 12.30 ft mean hgt, ASCE 7-98, CLOSED bldg, not located within 4.50 ft from roof edge, CAT II, EXP B, wind TC DL=2.8 psf, wind BC DL=2.2 psf.

Right end vertical not exposed to wind pressure.

(A) Continuous lateral bracing equally spaced on member.

Deflection meets L/360 live and L/240 total load. Creep increase factor for dead load is 1.50.

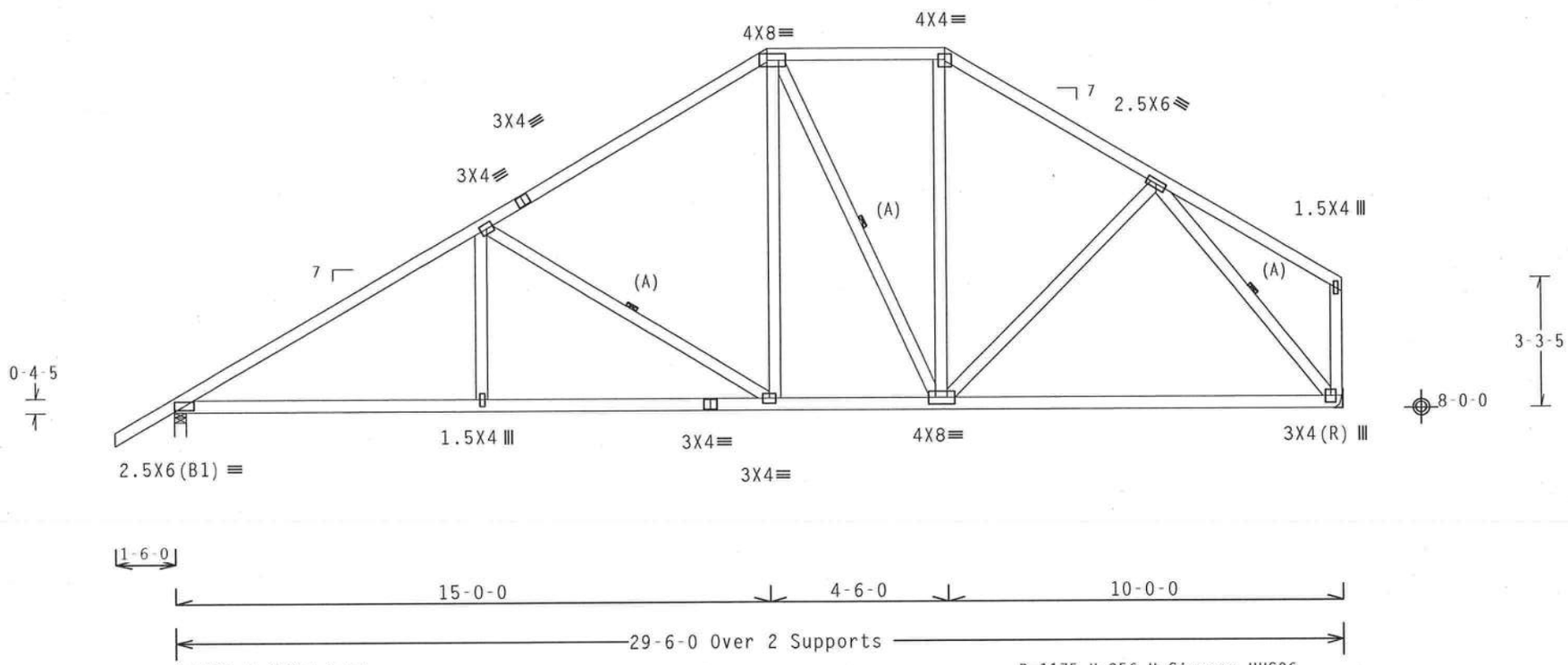

Design Crit: TPI-2002(STD)/FBC
Cq/RT=1.00(1.25)/10(0) 7.04.0[illegible] QTY:1 FL/-/4/-/-/R/-

PLT TYP. Wave

Scale =.25"/Ft.

ALPINE
Alpine Engineered Products, Inc.
1950 Marley Drive
Haines City, FL 33844
FL Certificate of Authorization # 567

WARNING TRUSSES REQUIRE EXTREME CARE IN FABRICATION, HANDLING, SHIPPING, INSTALLING AND BRACING. REFER TO BCSI 1-03 (BUILDING COMPONENT SAFETY INFORMATION), PUBLISHED BY TPI (TRUSS PLATE INSTITUTE, 583 D'ONOFRIO DR., SUITE 200, MADISON, WI 53719) AND WTCA (WOOD TRUSS COUNCIL OF AMERICA, 6300 ENTERPRISE LN, MADISON, WI 53719) FOR SAFETY PRACTICES PRIOR TO PERFORMING THESE FUNCTIONS. UNLESS OTHERWISE INDICATED, TOP CHORD SHALL HAVE PROPERLY ATTACHED STRUCTURAL PANELS AND BOTTOM CHORD SHALL HAVE A PROPERLY ATTACHED RIGID CEILING.

IMPORTANTFURNISH A COPY OF THIS DESIGN TO THE INSTALLATION CONTRACTOR. ALPINE ENGINEERED PRODUCTS, INC. SHALL NOT BE RESPONSIBLE FOR ANY DEVIATION FROM THIS DESIGN; ANY FAILURE TO BUILD THE TRUSS IN CONFORMANCE WITH TPI; OR FABRICATING, HANDLING, SHIPPING, INSTALLING & BRACING OF TRUSSES. DESIGN CONFORMS WITH APPLICABLE PROVISIONS OF NDS (NATIONAL DESIGN SPEC. BY AF&PA) AND TPI. ALPINE CONNECTOR PLATES ARE MADE OF 20/18/16GA (W,H/S/K) ASTM A653 GRADE 40/60 (W, K/H,S) GALV. STEEL. APPLY PLATES TO EACH FACE OF TRUSS AND, UNLESS OTHERWISE LOCATED ON THIS DESIGN, POSITION PER DRAWINGS 160A-Z. ANY INSPECTION OF PLATES FOLLOWED BY (1) SHALL BE PER ANNEX A3 OF TPI1-2002 SEC.3. A SEAL ON THIS DRAWING INDICATES ACCEPTANCE OF PROFESSIONAL ENGINEERING RESPONSIBILITY SOLELY FOR THE TRUSS COMPONENT DESIGN SHOWN. THE SUITABILITY AND USE OF THIS COMPONENT FOR ANY BUILDING IS THE RESPONSIBILITY OF THE BUILDING DESIGNER PER ANSI/TPI 1 SEC. 2.

ARTHUR R. FISHER
LICENSE
No. 59687
STATE OF FLORIDA
PROFESSIONAL ENGINEER

Dec [illegible] '05

TC LL	20.0 PSF	REF	R487-- 25412
TC DL	10.0 PSF	DATE	12/07/05
BC DL	10.0 PSF	DRW	HCUSR487 05341036
BC LL	0.0 PSF	HC-ENG	JB/AF
TOT.LD.	40.0 PSF	SEQN-	17746
DUR.FAC.	1.25		
SPACING	24.0"	JREF-	1SSS487_Z09

(3-509-STANLEY CRAWFORD-46 TURKEY RUN H16038)

Top chord 2x4 SP #2 Dense
Bot chord 2x4 SP #2 Dense
Webs 2x4 SP #3

Dead loads are stated on projected horizontal area basis.

H = recommended connection based on manufacturer tested capacities and calculations. Conditions may exist that require different connections than indicated. Refer to manufacturer publication for additional information.

110 mph wind, 12.72 ft mean hgt, ASCE 7-98, CLOSED bldg, not located within 4.50 ft from roof edge, CAT II, EXP B, wind TC DL=2.8 psf, wind BC DL=2.2 psf.

Right end vertical not exposed to wind pressure.

(A) Continuous lateral bracing equally spaced on member.

Deflection meets L/360 live and L/240 total load. Creep increase factor for dead load is 1.50.

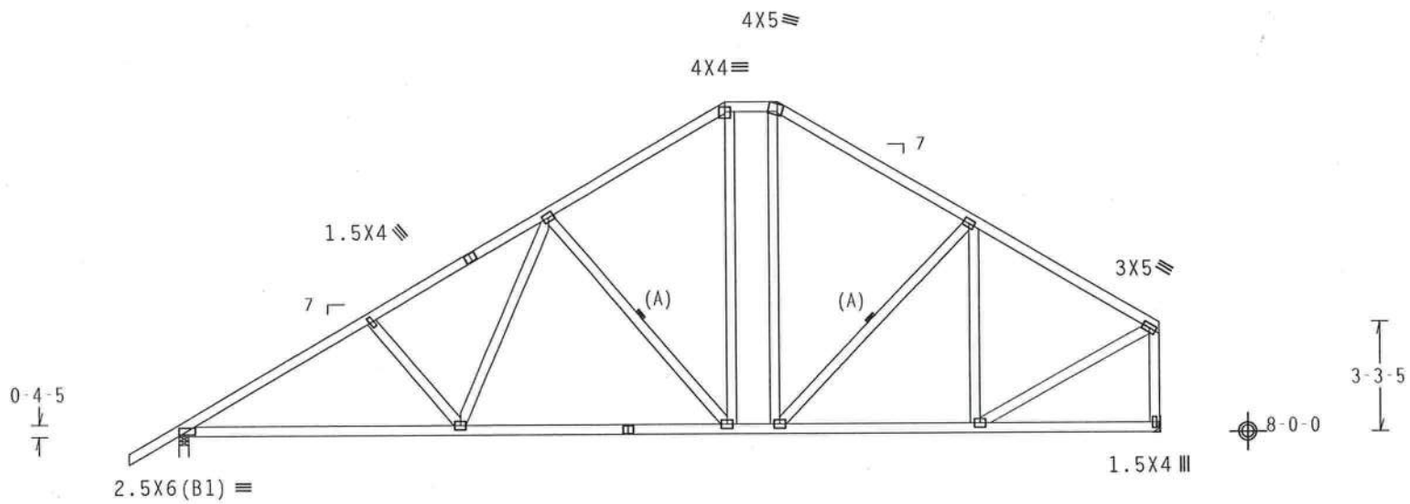

R=1174 U=354 H=Simpson HUS26
w/ (6) 10d Common, 0.148"x3.0" nails in Truss
w/ (14) 10d Common, 0.148"x3.0" nails in Girder
Girder is (2)2X6 min. So.Pine

Note: All Plates Are 3X4 Except As Shown.

Design Crit: TPI-2002(STD)/FBC
Cq/RT=1.00(1.25)/10(0) 7.04.0

PLT TYP. Wave QTY:1 FL/-/4/-/-/R/- Scale =.1875"/Ft.

ALPINE
Alpine Engineered Products, Inc.
1950 Marley Drive
Haines City, FL 33844
FL Certificate of Authorization # 567

WARNING TRUSSES REQUIRE EXTREME CARE IN FABRICATION, HANDLING, SHIPPING, INSTALLING AND BRACING. REFER TO BCSI 1-03 (BUILDING COMPONENT SAFETY INFORMATION), PUBLISHED BY TPI (TRUSS PLATE INSTITUTE, 583 D'ONOFRIO DR., SUITE 200, MADISON, WI 53719) AND WTCA (WOOD TRUSS COUNCIL OF AMERICA, 6300 ENTERPRISE LN, MADISON, WI 53719) FOR SAFETY PRACTICES PRIOR TO PERFORMING THESE FUNCTIONS. UNLESS OTHERWISE INDICATED, TOP CHORD SHALL HAVE PROPERLY ATTACHED STRUCTURAL PANELS AND BOTTOM CHORD SHALL HAVE A PROPERLY ATTACHED RIGID CEILING.

IMPORTANTFURNISH A COPY OF THIS DESIGN TO THE INSTALLATION CONTRACTOR. ALPINE ENGINEERED PRODUCTS, INC. SHALL NOT BE RESPONSIBLE FOR ANY DEVIATION FROM THIS DESIGN; ANY FAILURE TO BUILD THE TRUSS IN CONFORMANCE WITH TPI; OR FABRICATING, HANDLING, SHIPPING, INSTALLING & BRACING OF TRUSSES. DESIGN CONFORMS WITH APPLICABLE PROVISIONS OF NDS (NATIONAL DESIGN SPEC. BY AF&PA) AND TPI. ALPINE CONNECTOR PLATES ARE MADE OF 20/18/16GA (W.H/S/K) ASTM A653 GRADE 40/60 (W. K/H.S) GALV. STEEL. APPLY PLATES TO EACH FACE OF TRUSS AND, UNLESS OTHERWISE LOCATED ON THIS DESIGN, POSITION PER DRAWINGS 160A-Z. ANY INSPECTION OF PLATES FOLLOWED BY (1) SHALL BE PER ANNEX A3 OF TPI1-2002 SEC.3. A SEAL ON THIS DRAWING INDICATES ACCEPTANCE OF PROFESSIONAL ENGINEERING RESPONSIBILITY SOLELY FOR THE TRUSS COMPONENT DESIGN SHOWN. THE SUITABILITY AND USE OF THIS COMPONENT FOR ANY BUILDING IS THE RESPONSIBILITY OF THE BUILDING DESIGNER PER ANSI/TPI 1 SEC. 2.

ARTHUR R. FISHER
LICENSE
No.59687
STATE OF FLORIDA
PROFESSIONAL ENGINEER

Dec 07 '05

TC LL	20.0 PSF	REF	R487-- 25413
TC DL	10.0 PSF	DATE	12/07/05
BC DL	10.0 PSF	DRW	HCUSR487 05341037
BC LL	0.0 PSF	HC-ENG	JB/AF
TOT.LD.	40.0 PSF	SEQN-	17778
DUR.FAC.	1.25		
SPACING	24.0"	JREF-	1SSS487_Z09

(5-509-STANLEY CRAWFORD-48-TURKEY RUN C)

Top chord 2x4 SP #2 Dense
Bot chord 2x4 SP #2 Dense
Webs 2x4 SP #3

Dead loads are stated on projected horizontal area basis.

110 mph wind, 11.21 ft mean hgt, ASCE 7-98, CLOSED bldg, Located anywhere in roof, CAT II, EXP B, wind TC DL=2.8 psf, wind BC DL=2.2 psf.

Deflection meets L/360 live and L/240 total load. Creep increase factor for dead load is 1.50.

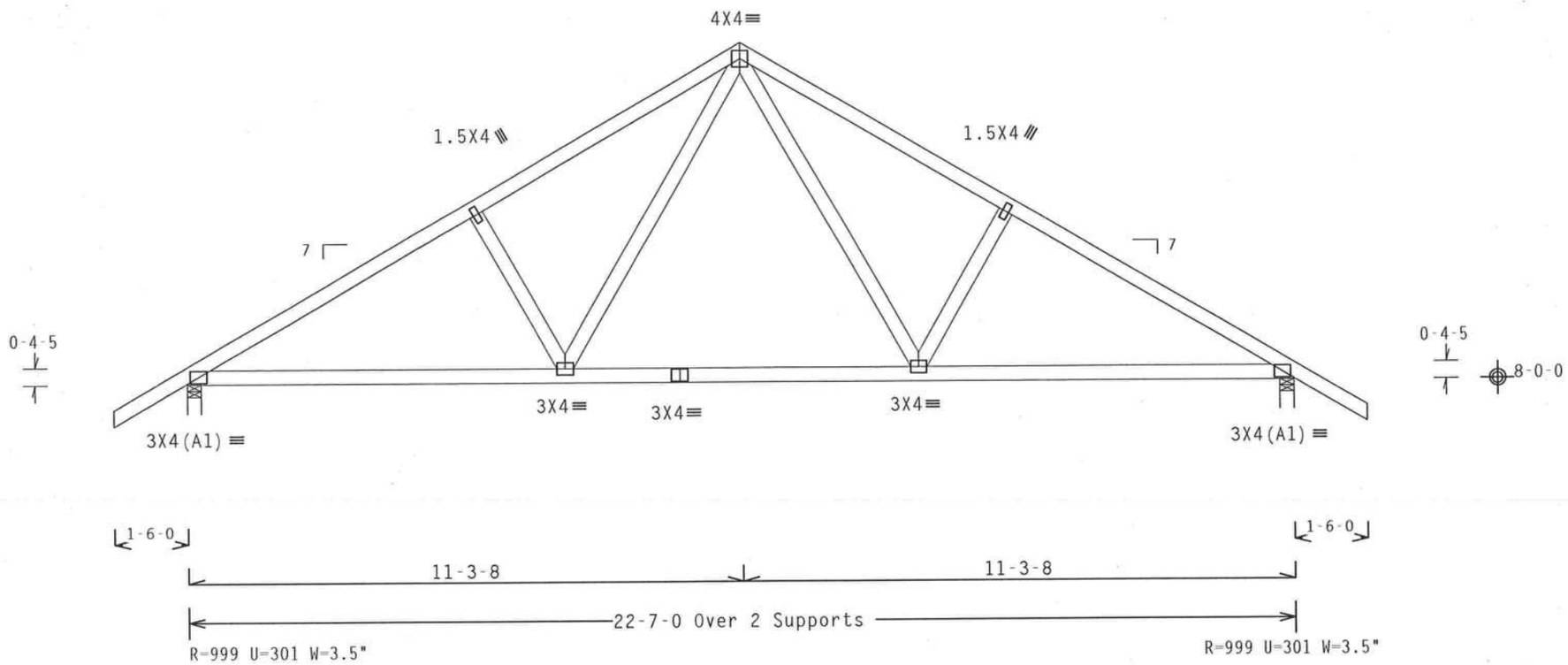

Design Crit: TPI-2002(STD)/FBC
Cq/RT=1.00(1.25)/10(0) 7.04.0 QTY:6 FL/-/4/-/-/R/- Scale =.3125"/Ft.

PLT TYP. Wave

ALPINE
Alpine Engineered Products, Inc.
1950 Marley Drive
Haines City, FL 33844
FL Certificate of Authorization # 567

WARNING TRUSSES REQUIRE EXTREME CARE IN FABRICATION, HANDLING, SHIPPING, INSTALLING AND BRACING. REFER TO BCSI 1-03 (BUILDING COMPONENT SAFETY INFORMATION), PUBLISHED BY TPI (TRUSS PLATE INSTITUTE, 583 D'ONOFRIO DR., SUITE 200, MADISON, WI 53719) AND WTCA (WOOD TRUSS COUNCIL OF AMERICA, 6300 ENTERPRISE LN, MADISON, WI 53719) FOR SAFETY PRACTICES PRIOR TO PERFORMING THESE FUNCTIONS. UNLESS OTHERWISE INDICATED, TOP CHORD SHALL HAVE PROPERLY ATTACHED STRUCTURAL PANELS AND BOTTOM CHORD SHALL HAVE A PROPERLY ATTACHED RIGID CEILING.

IMPORTANT FURNISH A COPY OF THIS DESIGN TO THE INSTALLATION CONTRACTOR. ALPINE ENGINEERED PRODUCTS, INC. SHALL NOT BE RESPONSIBLE FOR ANY DEVIATION FROM THIS DESIGN; ANY FAILURE TO BUILD THE TRUSS IN CONFORMANCE WITH TPI; OR FABRICATING, HANDLING, SHIPPING, INSTALLING & BRACING OF TRUSSES. DESIGN CONFORMS WITH APPLICABLE PROVISIONS OF NDS (NATIONAL DESIGN SPEC. BY AF&PA) AND TPI. ALPINE CONNECTOR PLATES ARE MADE OF 20/18/16GA (W,H/S/K) ASTM A653 GRADE 40/60 (W, K/H,S) GALV. STEEL. APPLY PLATES TO EACH FACE OF TRUSS AND, UNLESS OTHERWISE LOCATED ON THIS DESIGN, POSITION PER DRAWINGS 160A-Z. ANY INSPECTION OF PLATES FOLLOWED BY (1) SHALL BE PER ANNEX A3 OF TPI1-2002 SEC.3. A SEAL ON THIS DRAWING INDICATES ACCEPTANCE OF PROFESSIONAL ENGINEERING RESPONSIBILITY SOLELY FOR THE TRUSS COMPONENT DESIGN SHOWN. THE SUITABILITY AND USE OF THIS COMPONENT FOR ANY BUILDING IS THE RESPONSIBILITY OF THE BUILDING DESIGNER PER ANSI/TPI 1 SEC. 2.

ARTHUR R. FISHER
LICENSE
No. 59687
STATE OF FLORIDA
PROFESSIONAL ENGINEER

Dec 07 '05

TC LL	20.0 PSF	REF	R487-- 25414
TC DL	10.0 PSF	DATE	12/07/05
BC DL	10.0 PSF	DRW	HCUSR487 05341008
BC LL	0.0 PSF	HC-ENG	JB/AF *
TOT.LD.	40.0 PSF	SEQN-	17739
DUR.FAC.	1.25		
SPACING	24.0"	JREF-	1SSS487_Z09

(5-509-STANLEY CRAWFORD-48 TURKEY RUN CGE)

Top chord 2x4 SP #2 Dense
Bot chord 2x4 SP #2 Dense
Webs 2x4 SP #3

Dead loads are stated on projected horizontal area basis.

Gable end supports 8" max rake overhang.

Deflection meets L/360 live and L/240 total load. Creep increase factor for dead load is 1.50.

+ MEMBER TO BE LATERALLY BRACED FOR HORIZONTAL WIND LOADS. BRACING SYSTEM TO BE DESIGNED AND FURNISHED BY OTHERS.

110 mph wind, 11.05 ft mean hgt, ASCE 7-98, CLOSED bldg, Located anywhere in roof, CAT II, EXP B, wind TC DL=2.8 psf, wind BC DL=2.2 psf.

See DWGS A11015EC1103 & GBLLETIN0405 for more requirements.

THE BUILDING DESIGNER IS RESPONSIBLE FOR THE DESIGN OF ROOF AND CEILING DIAPHRAGMS, GABLE END SHEAR WALLS, SUPPORTING SHEAR WALLS. SHEAR WALLS MUST PROVIDE CONTINUOUS LATERAL RESTRAINT TO GABLE END. ALL CONNECTIONS TO BE DESIGNED BY THE BUILDING DESIGNER.

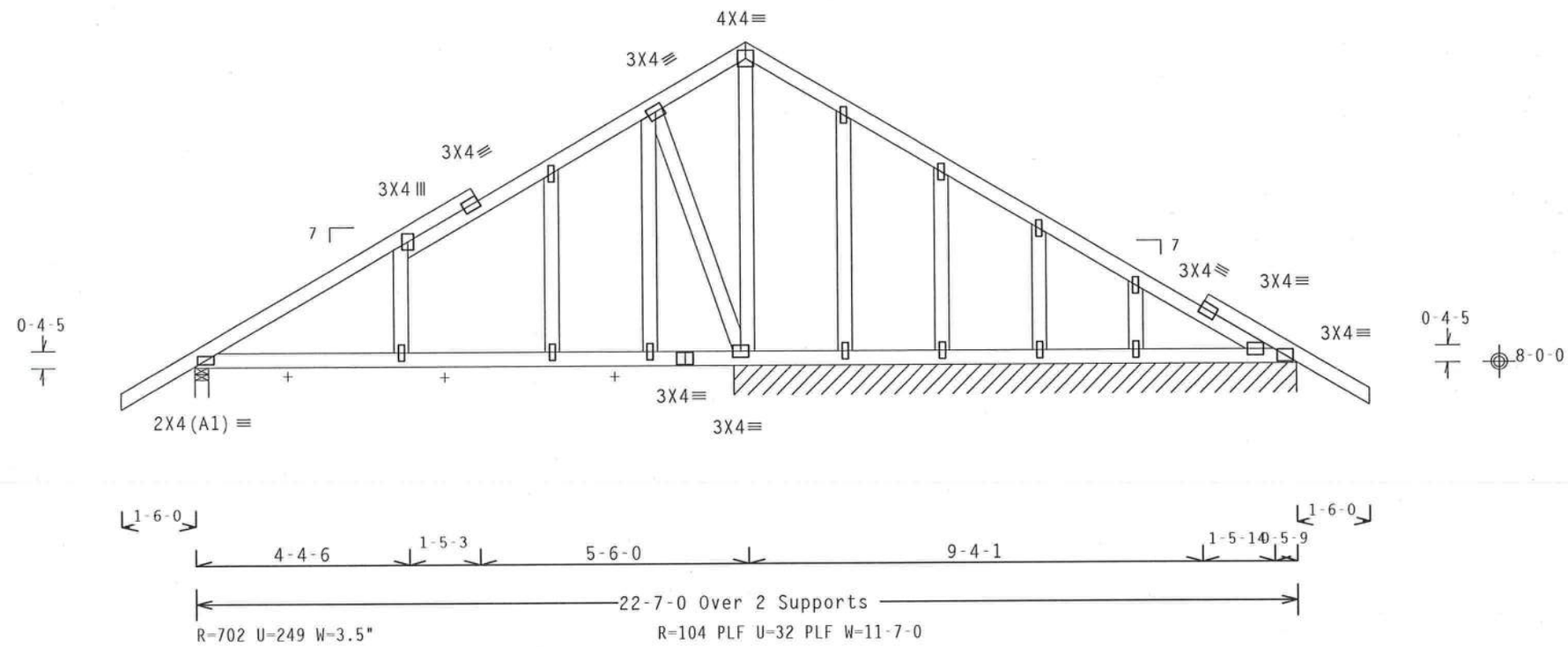

Note: All Plates Are 1.5X4 Except As Shown.

Design Crit: TPI-2002(STD)/FBC

PLT TYP. Wave

Cq/RT=1.00(1.25)/10(0) 7.04.G QTY:1 FL/-/4/-/-/R/- Scale =.3125"/Ft.

ALPINE

Alpine Engineered Products, Inc.
1950 Marley Drive
Haines City, FL 33844
FL Certificate of Authorization # 567

WARNING TRUSSES REQUIRE EXTREME CARE IN FABRICATION, HANDLING, SHIPPING, INSTALLING AND BRACING. REFER TO BCSI 1-03 (BUILDING COMPONENT SAFETY INFORMATION), PUBLISHED BY TPI (TRUSS PLATE INSTITUTE, 583 D'ONOFRIO DR., SUITE 200, MADISON, WI 53719) AND WTCA (WOOD TRUSS COUNCIL OF AMERICA, 6300 ENTERPRISE LN, MADISON, WI 53719) FOR SAFETY PRACTICES PRIOR TO PERFORMING THESE FUNCTIONS. UNLESS OTHERWISE INDICATED, TOP CHORD SHALL HAVE PROPERLY ATTACHED STRUCTURAL PANELS AND BOTTOM CHORD SHALL HAVE A PROPERLY ATTACHED RIGID CEILING.

IMPORTANT FURNISH A COPY OF THIS DESIGN TO THE INSTALLATION CONTRACTOR. ALPINE ENGINEERED PRODUCTS, INC. SHALL NOT BE RESPONSIBLE FOR ANY DEVIATION FROM THIS DESIGN; ANY FAILURE TO BUILD THE TRUSS IN CONFORMANCE WITH TPI; OR FABRICATING, HANDLING, SHIPPING, INSTALLING & BRACING OF TRUSSES. DESIGN CONFORMS WITH APPLICABLE PROVISIONS OF NDS (NATIONAL DESIGN SPEC. BY AF&PA) AND TPI. ALPINE CONNECTOR PLATES ARE MADE OF 20/18/16GA (W.H/S/K) ASTM A653 GRADE 40/60 (W. K/H.S) GALV. STEEL. APPLY PLATES TO EACH FACE OF TRUSS AND, UNLESS OTHERWISE LOCATED ON THIS DESIGN, POSITION PER DRAWINGS 160A-Z. ANY INSPECTION OF PLATES FOLLOWED BY (1) SHALL BE PER ANNEX A3 OF TPI1-2002 SEC.3. A SEAL ON THIS DRAWING INDICATES ACCEPTANCE OF PROFESSIONAL ENGINEERING RESPONSIBILITY SOLELY FOR THE TRUSS COMPONENT DESIGN SHOWN. THE SUITABILITY AND USE OF THIS COMPONENT FOR ANY BUILDING IS THE RESPONSIBILITY OF THE BUILDING DESIGNER PER ANSI/TPI 1 SEC. 2.

ARTHUR R. FISHER LICENSE No.59687 STATE OF FLORIDA PROFESSIONAL ENGINEER

Dec 07 '05

TC LL	20.0 PSF	REF	R487-- 25415
TC DL	10.0 PSF	DATE	12/07/05
BC DL	10.0 PSF	DRW	HCUSR487 05341038
BC LL	0.0 PSF	HC-ENG	JB/AF
TOT.LD.	40.0 PSF	SEQN-	17738 REV
DUR.FAC.	1.25		
SPACING	24.0"	JREF-	1SSS487_Z09

(5-509-STANLEY CRAWFORD-48 TURKEY RUN C1)

Top chord 2x4 SP #2 Dense
Bot chord 2x4 SP #2 Dense
Webs 2x4 SP #3

Dead loads are stated on projected horizontal area basis.

110 mph wind, 11.21 ft mean hgt, ASCE 7-98, CLOSED bldg, Located anywhere in roof, CAT II, EXP B, wind TC DL=2.8 psf, wind BC DL=2.2 psf.

Deflection meets L/360 live and L/240 total load. Creep increase factor for dead load is 1.50.

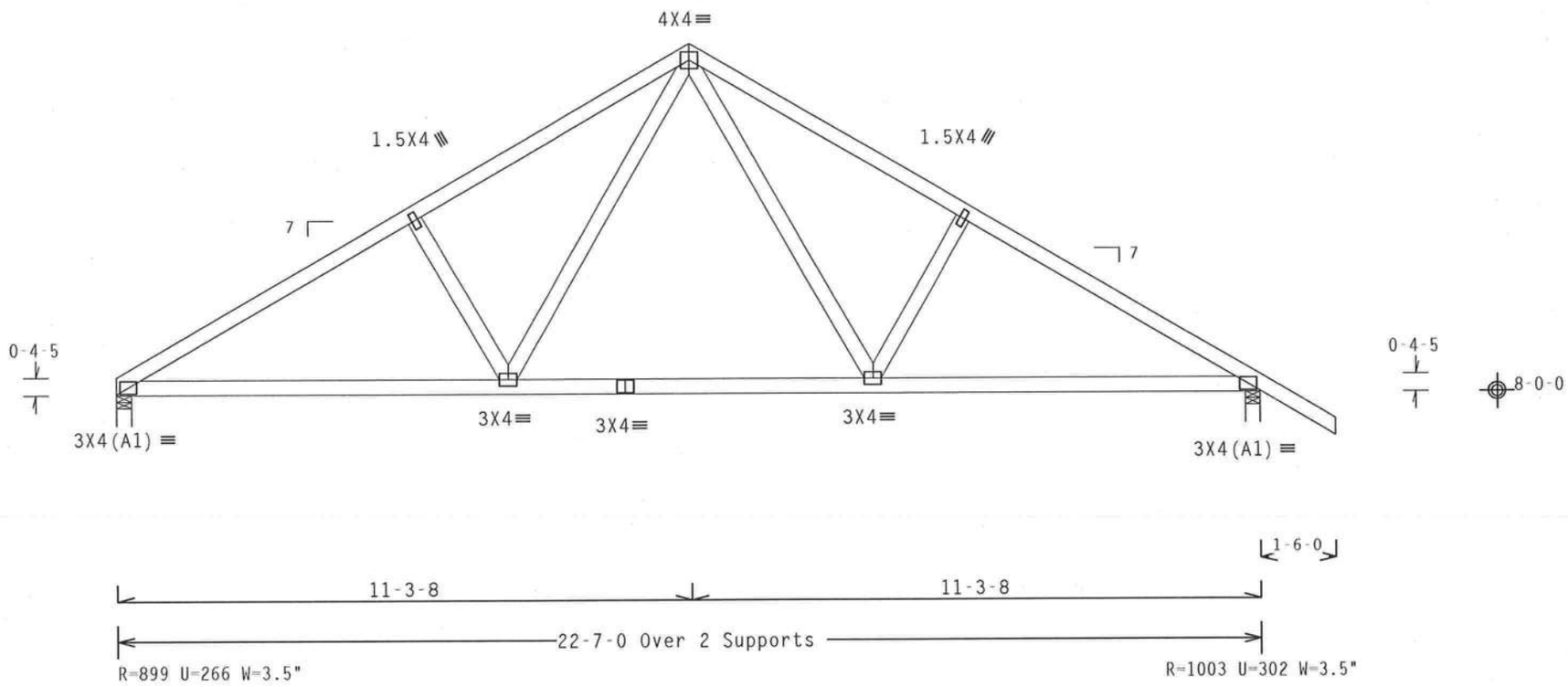

Design Crit: TPI-2002(STD)/FBC
PLT TYP. Wave Cq/RT=1.00(1.25)/10(0) 7.04.0 TY:3 FL/-/4/-/-/R/- Scale =.3125"/Ft.

ALPINE
Alpine Engineered Products, Inc.
1950 Marley Drive
Haines City, FL 33844
FL Certificate of Authorization # 567

WARNING TRUSSES REQUIRE EXTREME CARE IN FABRICATION, HANDLING, SHIPPING, INSTALLING AND BRACING. REFER TO BCSI 1-03 (BUILDING COMPONENT SAFETY INFORMATION), PUBLISHED BY TPI (TRUSS PLATE INSTITUTE, 583 D'ONOFRIO DR., SUITE 200, MADISON, WI 53719) AND WTCA (WOOD TRUSS COUNCIL OF AMERICA, 6300 ENTERPRISE LN, MADISON, WI 53719) FOR SAFETY PRACTICES PRIOR TO PERFORMING THESE FUNCTIONS. UNLESS OTHERWISE INDICATED, TOP CHORD SHALL HAVE PROPERLY ATTACHED STRUCTURAL PANELS AND BOTTOM CHORD SHALL HAVE A PROPERLY ATTACHED RIGID CEILING.

IMPORTANTFURNISH A COPY OF THIS DESIGN TO THE INSTALLATION CONTRACTOR. ALPINE ENGINEERED PRODUCTS, INC. SHALL NOT BE RESPONSIBLE FOR ANY DEVIATION FROM THIS DESIGN; ANY FAILURE TO BUILD THE TRUSS IN CONFORMANCE WITH TPI; OR FABRICATING, HANDLING, SHIPPING, INSTALLING & BRACING OF TRUSSES. DESIGN CONFORMS WITH APPLICABLE PROVISIONS OF NDS (NATIONAL DESIGN SPEC. BY AF&PA) AND TPI. ALPINE CONNECTOR PLATES ARE MADE OF 20/18/16GA (W,H/S/K) ASTM A653 GRADE 40/60 (W, K/H,S) GALV. STEEL. APPLY PLATES TO EACH FACE OF TRUSS AND, UNLESS OTHERWISE LOCATED ON THIS DESIGN, POSITION PER DRAWINGS 160A-Z. ANY INSPECTION OF PLATES FOLLOWED BY (1) SHALL BE PER ANNEX A3 OF TPI1-2002 SEC.3. A SEAL ON THIS DRAWING INDICATES ACCEPTANCE OF PROFESSIONAL ENGINEERING RESPONSIBILITY SOLELY FOR THE TRUSS COMPONENT DESIGN SHOWN. THE SUITABILITY AND USE OF THIS COMPONENT FOR ANY BUILDING IS THE RESPONSIBILITY OF THE BUILDING DESIGNER PER ANSI/TPI 1 SEC. 2.

ARTHUR R. FISHER LICENSE No. 59687 STATE OF FLORIDA PROFESSIONAL ENGINEER
Dec 07 '05

TC LL	20.0 PSF	REF	R487-- 25416
TC DL	10.0 PSF	DATE	12/07/05
BC DL	10.0 PSF	DRW	HCUSR487 05341009
BC LL	0.0 PSF	HC-ENG	JB/AF *
TOT.LD.	40.0 PSF	SEQN-	17740
DUR.FAC.	1.25		
SPACING	24.0"	JREF-	1SSS487_Z09

(5-509-STANLEY CRAWFORD-48 TURKEY RUN - CG)

Top chord 2x4 SP #2 Dense
Bot chord 2x6 SP #1 Dense
Webs 2x4 SP #3 :W7 2x4 SP #2 Dense:
:Lt Wedge 2x4 SP #3:

SPECIAL LOADS
------(LUMBER DUR.FAC.=1.25 / PLATE DUR.FAC.=1.25)
TC - From 60 PLF at 0.00 to 60 PLF at 24.08
BC - From 20 PLF at 0.00 to 20 PLF at 22.58
BC - From 4 PLF at 22.58 to 4 PLF at 24.08
BC - 1526 LB Conc. Load at 2.06, 4.00
BC - 1165 LB Conc. Load at 6.06, 7.52, 9.52, 11.52, 13.52
BC - 2508 LB Conc. Load at 15.52

110 mph wind, 15.00 ft mean hgt, ASCE 7-98, CLOSED bldg, not located within 4.50 ft from roof edge, CAT II, EXP B, wind TC DL=2.8 psf, wind BC DL=2.2 psf.

2 COMPLETE TRUSSES REQUIRED

Nailing Schedule: (10d_Common_(0.148"x3",_min.)_nails)
Top Chord: 1 Row @12.00" o.c.
Bot Chord: 1 Row @ 3.75" o.c.
Webs : 1 Row @ 4" o.c.
Use equal spacing between rows and stagger nails in each row to avoid splitting.

Bearing blocks: Nail type: 10d_Common_(0.148"x3",_min.)_nails

BRG	X-LOC	#BLOCKS	LENGTH/BLK	#NAILS/BLK	WALL PLATE
1	0.000'	1	12"	7	Match Truss

Bearing block to be same size and species as bottom chord.
Refer to drawing CNBRGBLK1103 for additional information.

Dead loads are stated on projected horizontal area basis.

Deflection meets L/360 live and L/240 total load. Creep increase factor for dead load is 1.50.

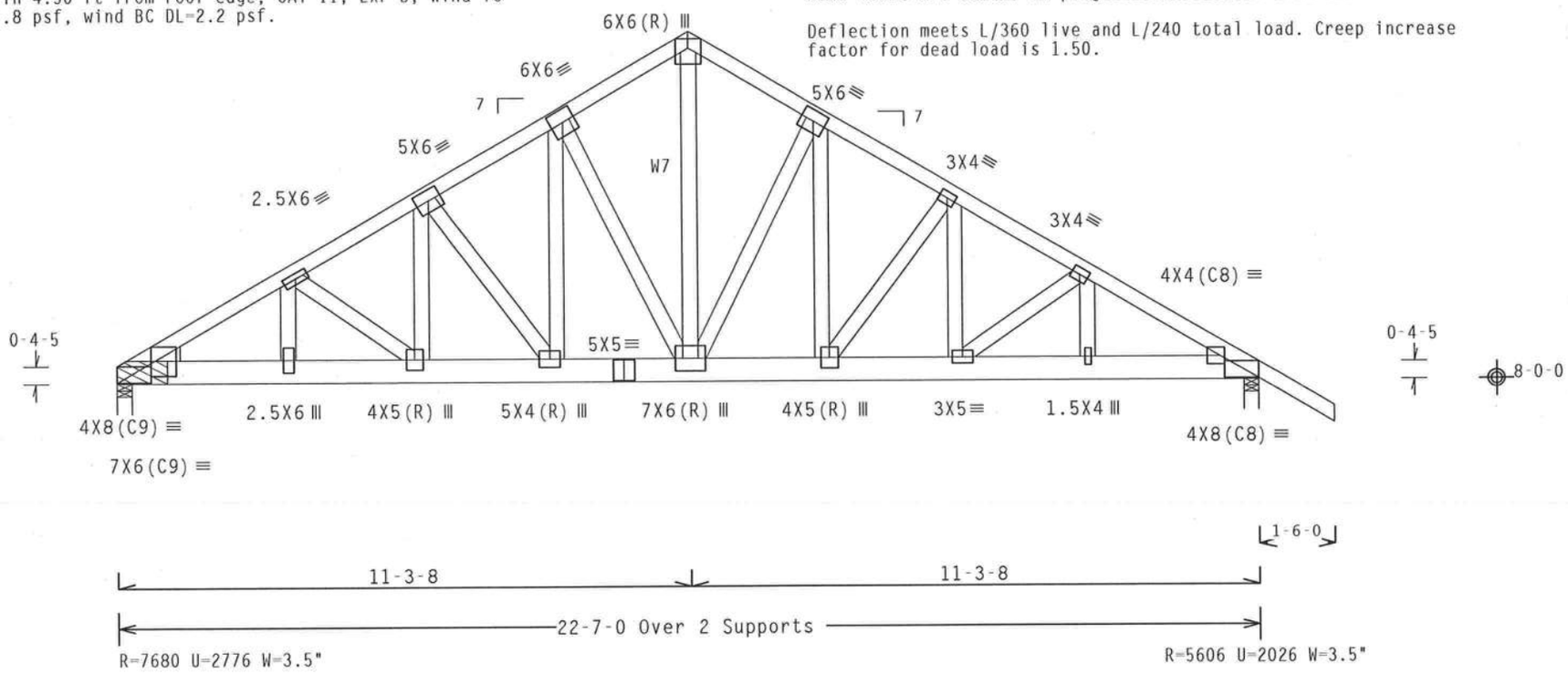

Design Crit: TPI-2002(STD)/FBC
Cq/RT=1.00(1.25)/10(0) 7.04.0 QTY:1 FL/-/4/-/-/R/- Scale =.3125"/Ft.

PLT TYP. Wave

ALPINE
Alpine Engineered Products, Inc.
1950 Marley Drive
Haines City, FL 33844
FL Certificate of Authorization # 567

WARNING TRUSSES REQUIRE EXTREME CARE IN FABRICATION, HANDLING, SHIPPING, INSTALLING AND BRACING. REFER TO BCSI 1-03 (BUILDING COMPONENT SAFETY INFORMATION), PUBLISHED BY TPI (TRUSS PLATE INSTITUTE, 583 D'ONOFRIO DR., SUITE 200, MADISON, WI 53719) AND WTCA (WOOD TRUSS COUNCIL OF AMERICA, 6300 ENTERPRISE LN, MADISON, WI 53719) FOR SAFETY PRACTICES PRIOR TO PERFORMING THESE FUNCTIONS. UNLESS OTHERWISE INDICATED, TOP CHORD SHALL HAVE PROPERLY ATTACHED STRUCTURAL PANELS AND BOTTOM CHORD SHALL HAVE A PROPERLY ATTACHED RIGID CEILING.

IMPORTANTFURNISH A COPY OF THIS DESIGN TO THE INSTALLATION CONTRACTOR. ALPINE ENGINEERED PRODUCTS, INC. SHALL NOT BE RESPONSIBLE FOR ANY DEVIATION FROM THIS DESIGN; ANY FAILURE TO BUILD THE TRUSS IN CONFORMANCE WITH TPI; OR FABRICATING, HANDLING, SHIPPING, INSTALLING & BRACING OF TRUSSES. DESIGN CONFORMS WITH APPLICABLE PROVISIONS OF NDS (NATIONAL DESIGN SPEC. BY AF&PA) AND TPI. ALPINE CONNECTOR PLATES ARE MADE OF 20/18/16GA (W,H/S/K) ASTM A653 GRADE 40/60 (W, K/H,S) GALV. STEEL. APPLY PLATES TO EACH FACE OF TRUSS AND, UNLESS OTHERWISE LOCATED ON THIS DESIGN, POSITION PER DRAWINGS 160A-Z. ANY INSPECTION OF PLATES FOLLOWED BY (1) SHALL BE PER ANNEX A3 OF TPI1-2002 SEC.3. A SEAL ON THIS DRAWING INDICATES ACCEPTANCE OF PROFESSIONAL ENGINEERING RESPONSIBILITY SOLELY FOR THE TRUSS COMPONENT DESIGN SHOWN. THE SUITABILITY AND USE OF THIS COMPONENT FOR ANY BUILDING IS THE RESPONSIBILITY OF THE BUILDING DESIGNER PER ANSI/TPI 1 SEC. 2.

ARTHUR R. FISHER LICENSE No.59687 STATE OF FLORIDA PROFESSIONAL ENGINEER
Dec 07 '05

TC LL	20.0 PSF	REF	R487-- 25417
TC DL	10.0 PSF	DATE	12/07/05
BC DL	10.0 PSF	DRW	HCUSR487 05341039
BC LL	0.0 PSF	HC-ENG	JB/AF
TOT.LD.	40.0 PSF	SEQN-	17741
DUR.FAC.	1.25		
SPACING	24.0"	JREF-	1SSS487_Z09

(5-509-STANLEY CRAWFORD-48-TURKEY RUN D)

Top chord 2x4 SP #2 Dense
Bot chord 2x4 SP #2 Dense
Webs 2x4 SP #3

SPECIAL LOADS
------(LUMBER DUR.FAC.=1.25 / PLATE DUR.FAC.=1.25)
TC - From 60 PLF at -1.50 to 60 PLF at 22.17
BC - From 4 PLF at -1.50 to 4 PLF at 0.00
BC - From 20 PLF at 0.00 to 20 PLF at 22.17
BC - 278 LB Conc. Load at 14.90, 16.90, 18.90
BC - 205 LB Conc. Load at 20.90

110 mph wind, 15.00 ft mean hgt, ASCE 7-98, CLOSED bldg, not located within 4.50 ft from roof edge, CAT II, EXP B, wind TC DL=2.8 psf, wind BC DL=2.2 psf.

Dead loads are stated on projected horizontal area basis.

Deflection meets L/360 live and L/240 total load. Creep increase factor for dead load is 1.50.

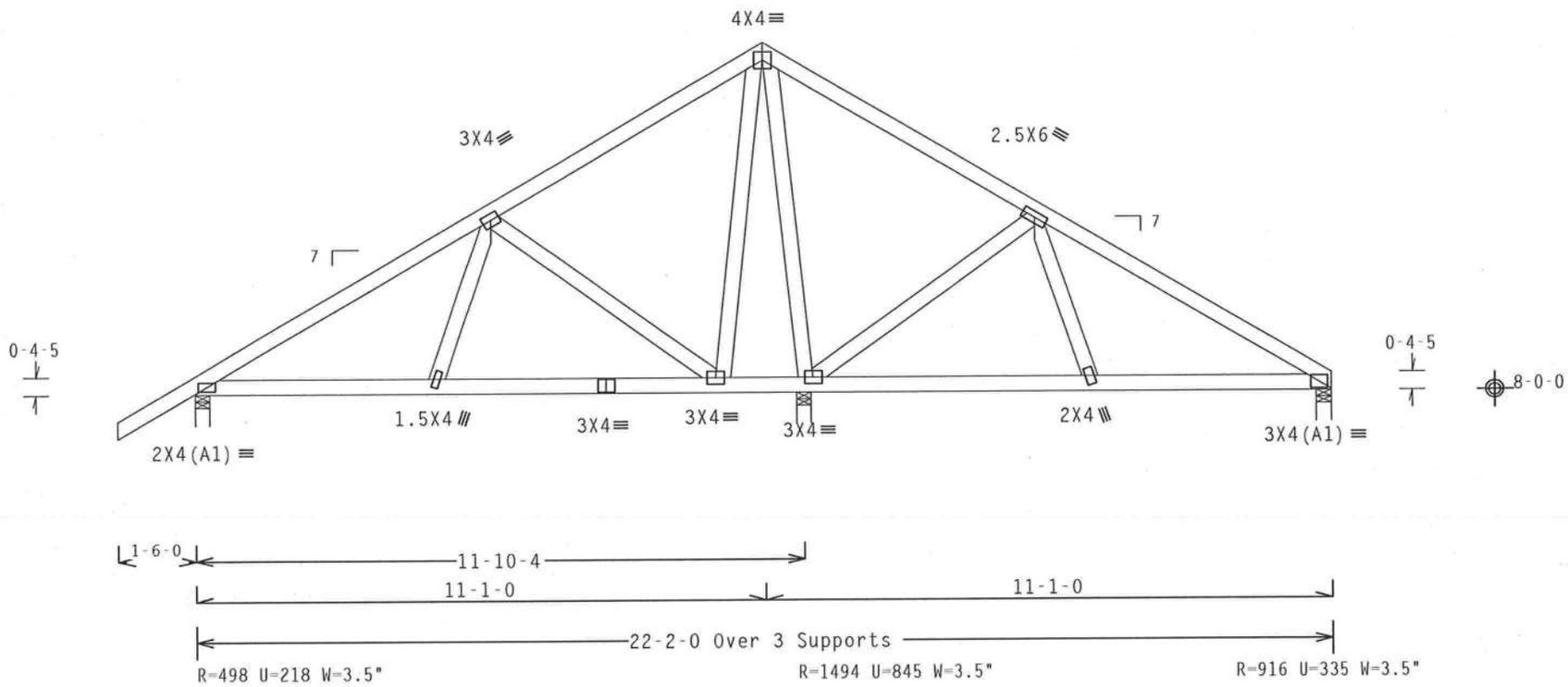

Design Crit: TPI-2002(STD)/FBC
PLT TYP. Wave Cq/RT=1.00(1.25)/10(0) 7.04.0 QTY:1 FL/-/4/-/-/R/- Scale =.3125"/Ft.

ALPINE
Alpine Engineered Products, Inc.
1950 Marley Drive
Haines City, FL 33844
FL Certificate of Authorization # 567

WARNING TRUSSES REQUIRE EXTREME CARE IN FABRICATION, HANDLING, SHIPPING, INSTALLING AND BRACING. REFER TO BCSI 1-03 (BUILDING COMPONENT SAFETY INFORMATION), PUBLISHED BY TPI (TRUSS PLATE INSTITUTE, 583 D'ONOFRIO DR., SUITE 200, MADISON, WI 53719) AND WTCA (WOOD TRUSS COUNCIL OF AMERICA, 6300 ENTERPRISE LN, MADISON, WI 53719) FOR SAFETY PRACTICES PRIOR TO PERFORMING THESE FUNCTIONS. UNLESS OTHERWISE INDICATED, TOP CHORD SHALL HAVE PROPERLY ATTACHED STRUCTURAL PANELS AND BOTTOM CHORD SHALL HAVE A PROPERLY ATTACHED RIGID CEILING.

IMPORTANTFURNISH A COPY OF THIS DESIGN TO THE INSTALLATION CONTRACTOR. ALPINE ENGINEERED PRODUCTS, INC. SHALL NOT BE RESPONSIBLE FOR ANY DEVIATION FROM THIS DESIGN; ANY FAILURE TO BUILD THE TRUSS IN CONFORMANCE WITH TPI; OR FABRICATING, HANDLING, SHIPPING, INSTALLING & BRACING OF TRUSSES. DESIGN CONFORMS WITH APPLICABLE PROVISIONS OF NDS (NATIONAL DESIGN SPEC, BY AF&PA) AND TPI. ALPINE CONNECTOR PLATES ARE MADE OF 20/18/16GA (W,H/S/K) ASTM A653 GRADE 40/60 (W, K/H,S) GALV. STEEL. APPLY PLATES TO EACH FACE OF TRUSS AND, UNLESS OTHERWISE LOCATED ON THIS DESIGN, POSITION PER DRAWINGS 160A-Z. ANY INSPECTION OF PLATES FOLLOWED BY (I) SHALL BE PER ANNEX A3 OF TPI1-2002 SEC.3. A SEAL ON THIS DRAWING INDICATES ACCEPTANCE OF PROFESSIONAL ENGINEERING RESPONSIBILITY SOLELY FOR THE TRUSS COMPONENT DESIGN SHOWN. THE SUITABILITY AND USE OF THIS COMPONENT FOR ANY BUILDING IS THE RESPONSIBILITY OF THE BUILDING DESIGNER PER ANSI/TPI 1 SEC. 2.

ARTHUR R. FISHER LICENSE No.59687 STATE OF FLORIDA PROFESSIONAL ENGINEER
Dec '05

TC LL	20.0 PSF	REF	R487-- 25418
TC DL	10.0 PSF	DATE	12/07/05
BC DL	10.0 PSF	DRW	HCUSR487 05341040
BC LL	0.0 PSF	HC-ENG	JB/AF
TOT.LD.	40.0 PSF	SEQN-	17770
DUR.FAC.	1.25		
SPACING	24.0"	JREF-	1SSS487_Z09

(5-509-STANLEY CRAWFORD-48 TURKEY RUN DGE)

Top chord 2x4 SP #2 Dense
Bot chord 2x4 SP #2 Dense
Webs 2x4 SP #3

SPECIAL LOADS
------(LUMBER DUR.FAC.=1.25 / PLATE DUR.FAC.=1.25)

TC - From	60 PLF at	-1.50 to	60 PLF at	6.00
TC - From	82 PLF at	6.00 to	82 PLF at	23.67
BC - From	4 PLF at	-1.50 to	4 PLF at	0.00
BC - From	20 PLF at	0.00 to	20 PLF at	22.17
BC - From	4 PLF at	22.17 to	4 PLF at	23.67

+ MEMBER TO BE LATERALLY BRACED FOR HORIZONTAL WIND LOADS.
BRACING SYSTEM TO BE DESIGNED AND FURNISHED BY OTHERS.

110 mph wind, 10.98 ft mean hgt, ASCE 7-98, CLOSED bldg, Located anywhere in roof, CAT II, EXP B, wind TC DL=2.8 psf, wind BC DL=2.2 psf.

Dead loads are stated on projected horizontal area basis.

See DWGS A11015EC1103 & GBLLETIN0405 for more requirements.

Deflection meets L/360 live and L/240 total load. Creep increase factor for dead load is 1.50.

THE BUILDING DESIGNER IS RESPONSIBLE FOR THE DESIGN OF ROOF AND CEILING DIAPHRAGMS, GABLE END SHEAR WALLS, SUPPORTING SHEAR WALLS. SHEAR WALLS MUST PROVIDE CONTINUOUS LATERAL RESTRAINT TO GABLE END. ALL CONNECTIONS TO BE DESIGNED BY THE BUILDING DESIGNER.

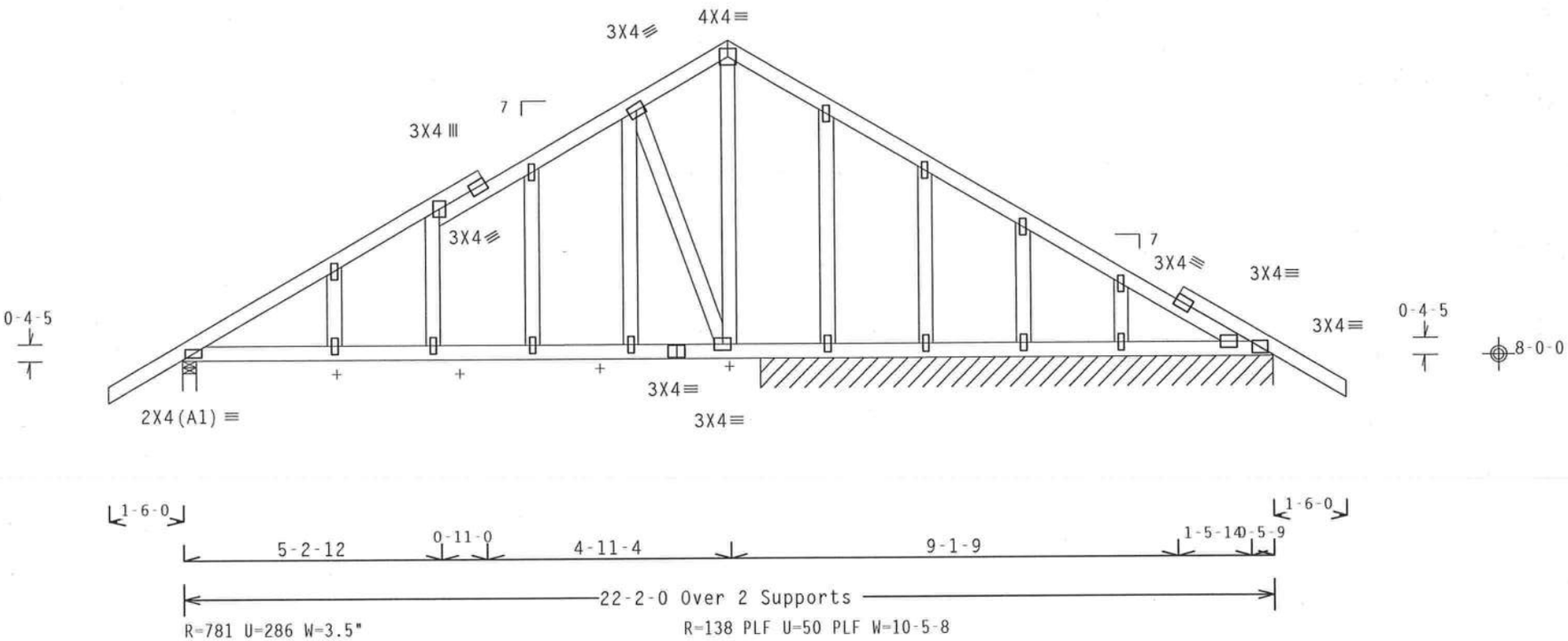

Note: All Plates Are 1.5X4 Except As Shown.
Design Crit: TPI-2002(STD)/FBC
PLT TYP. Wave Cq/RT=1.00(1.25)/10(0) 7.04.0 QTY:1 FL/-/4/-/-/R/- Scale =.3125"/Ft.

ALPINE
Alpine Engineered Products, Inc.
1950 Marley Drive
Haines City, FL 33844
FL Certificate of Authorization # 567

WARNING TRUSSES REQUIRE EXTREME CARE IN FABRICATION, HANDLING, SHIPPING, INSTALLING AND BRACING. REFER TO BCSI 1-03 (BUILDING COMPONENT SAFETY INFORMATION), PUBLISHED BY TPI (TRUSS PLATE INSTITUTE, 583 D'ONOFRIO DR., SUITE 200, MADISON, WI 53719) AND WTCA (WOOD TRUSS COUNCIL OF AMERICA, 6300 ENTERPRISE LN, MADISON, WI 53719) FOR SAFETY PRACTICES PRIOR TO PERFORMING THESE FUNCTIONS. UNLESS OTHERWISE INDICATED, TOP CHORD SHALL HAVE PROPERLY ATTACHED STRUCTURAL PANELS AND BOTTOM CHORD SHALL HAVE A PROPERLY ATTACHED RIGID CEILING.

IMPORTANT FURNISH A COPY OF THIS DESIGN TO THE INSTALLATION CONTRACTOR. ALPINE ENGINEERED PRODUCTS, INC. SHALL NOT BE RESPONSIBLE FOR ANY DEVIATION FROM THIS DESIGN; ANY FAILURE TO BUILD THE TRUSS IN CONFORMANCE WITH TPI; OR FABRICATING, HANDLING, SHIPPING, INSTALLING & BRACING OF TRUSSES. DESIGN CONFORMS WITH APPLICABLE PROVISIONS OF NDS (NATIONAL DESIGN SPEC, BY AF&PA) AND TPI. ALPINE CONNECTOR PLATES ARE MADE OF 20/18/16GA (W,H/S/K) ASTM A653 GRADE 40/60 (W, K/H,S) GALV. STEEL. APPLY PLATES TO EACH FACE OF TRUSS AND, UNLESS OTHERWISE LOCATED ON THIS DESIGN, POSITION PER DRAWINGS 160A-Z. ANY INSPECTION OF PLATES FOLLOWED BY (I) SHALL BE PER ANNEX A3 OF TPI1-2002 SEC.3. A SEAL ON THIS DRAWING INDICATES ACCEPTANCE OF PROFESSIONAL ENGINEERING RESPONSIBILITY SOLELY FOR THE TRUSS COMPONENT DESIGN SHOWN. THE SUITABILITY AND USE OF THIS COMPONENT FOR ANY BUILDING IS THE RESPONSIBILITY OF THE BUILDING DESIGNER PER ANSI/TPI 1 SEC. 2.

ARTHUR R. FISHER
LICENSE
No. 59687
STATE OF FLORIDA
PROFESSIONAL ENGINEER
Dec 07 '05

TC LL	20.0 PSF	REF	R487-- 25419
TC DL	10.0 PSF	DATE	12/07/05
BC DL	10.0 PSF	DRW	HCUSR487 05341041
BC LL	0.0 PSF	HC-ENG	JB/AF
TOT.LD.	40.0 PSF	SEQN-	17748 REV
DUR.FAC.	1.25		
SPACING	24.0"	JREF-	1SSS487_Z09

(5-509-STANLEY CRAWFORD-48 TURKEY RUN DSG)

Top chord 2x4 SP #2 Dense
Bot chord 2x6 SP #1 Dense
Webs 2x4 SP #3

SPECIAL LOADS
------(LUMBER DUR.FAC.=1.25 / PLATE DUR.FAC.=1.25)
TC - From 60 PLF at 0.00 to 60 PLF at 12.00
BC - From 20 PLF at 0.00 to 20 PLF at 12.00
BC - 1199 LB Conc. Load at 0.90
BC - 1248 LB Conc. Load at 2.90
BC - 1255 LB Conc. Load at 4.90
BC - 1236 LB Conc. Load at 6.90, 8.90, 10.90

Dead loads are stated on projected horizontal area basis.

Deflection meets L/360 live and L/240 total load. Creep increase factor for dead load is 1.50.

2 COMPLETE TRUSSES REQUIRED

Nailing Schedule: (10d_Common_(0.148"x3",_min.)_nails)
Top Chord: 1 Row @12.00" o.c.
Bot Chord: 2 Rows @ 6.00" o.c. (Each Row)
Webs : 1 Row @ 4" o.c.
Use equal spacing between rows and stagger nails in each row to avoid splitting.

110 mph wind, 15.00 ft mean hgt, ASCE 7-98, CLOSED bldg, not located within 4.50 ft from roof edge, CAT II, EXP B, wind TC DL=2.8 psf, wind BC DL=2.2 psf.

Right end vertical not exposed to wind pressure.

4X4

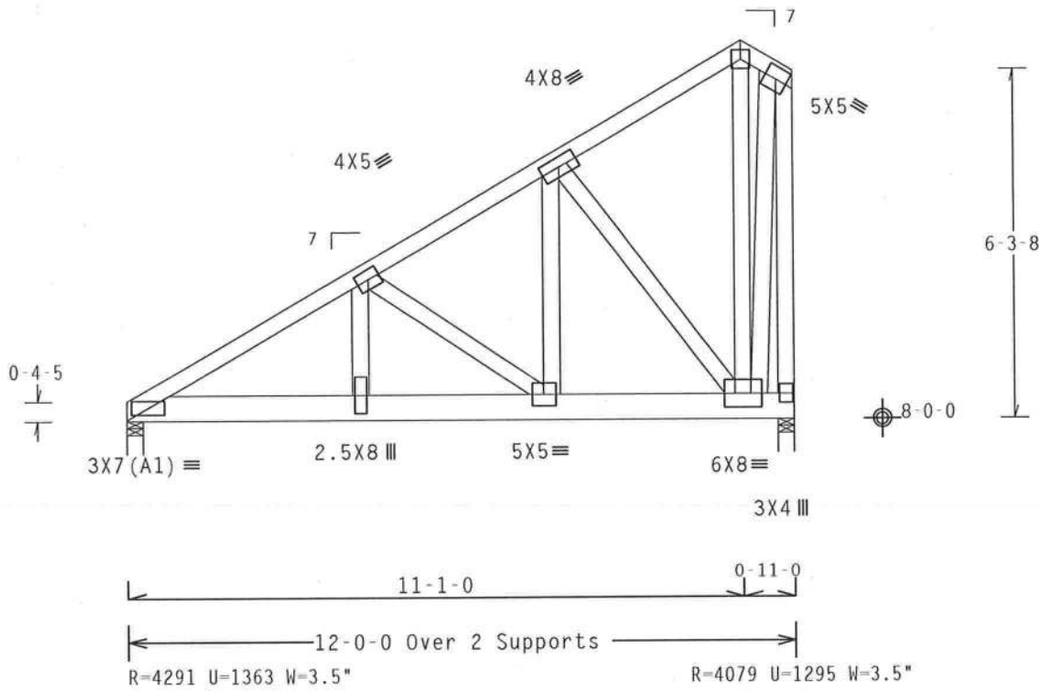

Design Crit: TPI-2002(STD)/FBC
Cq/RT=1.00(1.25)/10(0) 7.04.0

PLT TYP. Wave QTY:1 FL/-/4/-/-/R/- Scale =.3125"/Ft.

ALPINE
Alpine Engineered Products, Inc.
1950 Marley Drive
Haines City, FL 33844
FL Certificate of Authorization # 567

WARNING TRUSSES REQUIRE EXTREME CARE IN FABRICATION, HANDLING, SHIPPING, INSTALLING AND BRACING. REFER TO BCSI 1-03 (BUILDING COMPONENT SAFETY INFORMATION), PUBLISHED BY TPI (TRUSS PLATE INSTITUTE, 583 D'ONOFRIO DR., SUITE 200, MADISON, WI 53719) AND WTCA (WOOD TRUSS COUNCIL OF AMERICA, 6300 ENTERPRISE LN, MADISON, WI 53719) FOR SAFETY PRACTICES PRIOR TO PERFORMING THESE FUNCTIONS. UNLESS OTHERWISE INDICATED, TOP CHORD SHALL HAVE PROPERLY ATTACHED STRUCTURAL PANELS AND BOTTOM CHORD SHALL HAVE A PROPERLY ATTACHED RIGID CEILING.

IMPORTANT FURNISH A COPY OF THIS DESIGN TO THE INSTALLATION CONTRACTOR. ALPINE ENGINEERED PRODUCTS, INC. SHALL NOT BE RESPONSIBLE FOR ANY DEVIATION FROM THIS DESIGN; ANY FAILURE TO BUILD THE TRUSS IN CONFORMANCE WITH TPI; OR FABRICATING, HANDLING, SHIPPING, INSTALLING & BRACING OF TRUSSES. DESIGN CONFORMS WITH APPLICABLE PROVISIONS OF NDS (NATIONAL DESIGN SPEC. BY AF&PA) AND TPI. ALPINE CONNECTOR PLATES ARE MADE OF 20/18/16GA (W,H/S/K) ASTM A653 GRADE 40/60 (W, K/H,S) GALV. STEEL. APPLY PLATES TO EACH FACE OF TRUSS AND, UNLESS OTHERWISE LOCATED ON THIS DESIGN, POSITION PER DRAWINGS 160A-Z. ANY INSPECTION OF PLATES FOLLOWED BY (1) SHALL BE PER ANNEX A3 OF TPI1-2002 SEC.3. A SEAL ON THIS DRAWING INDICATES ACCEPTANCE OF PROFESSIONAL ENGINEERING RESPONSIBILITY SOLELY FOR THE TRUSS COMPONENT DESIGN SHOWN. THE SUITABILITY AND USE OF THIS COMPONENT FOR ANY BUILDING IS THE RESPONSIBILITY OF THE BUILDING DESIGNER PER ANSI/TPI 1 SEC. 2.

ARTHUR B. FISHER LICENSE No.59687 STATE OF FLORIDA PROFESSIONAL ENGINEER

DEC 07 '05

TC LL	20.0 PSF	REF	R487-- 25420
TC DL	10.0 PSF	DATE	12/07/05
BC DL	10.0 PSF	DRW	HCUSR487 05341042
BC LL	0.0 PSF	HC-ENG	JB/AF
TOT.LD.	40.0 PSF	SEQN-	17755
DUR.FAC.	1.25		
SPACING	24.0"	JREF-	1SSS487_Z09

(5-509-STANLEY CRAWFORD-48-TORKEY KOW EGE)

Top chord 2x4 SP #2 Dense
Bot chord 2x4 SP #2 Dense
Webs 2x4 SP #3

SPECIAL LOADS
------(LUMBER DUR.FAC.=1.25 / PLATE DUR.FAC.=1.25)

TC - From	82 PLF at	-1.50 to	82 PLF at	13.50
BC - From	4 PLF at	-1.50 to	4 PLF at	0.00
BC - From	20 PLF at	0.00 to	20 PLF at	12.00
BC - From	4 PLF at	12.00 to	4 PLF at	13.50

110 mph wind, 9.50 ft mean hgt, ASCE 7-98, CLOSED bldg, Located anywhere in roof, CAT II, EXP B, wind TC DL=2.8 psf, wind BC DL=2.2 psf.

Dead loads are stated on projected horizontal area basis.

See DWGS A11015EC1103 & GBLLETIN0405 for more requirements.

Deflection meets L/360 live and L/240 total load. Creep increase factor for dead load is 1.50.

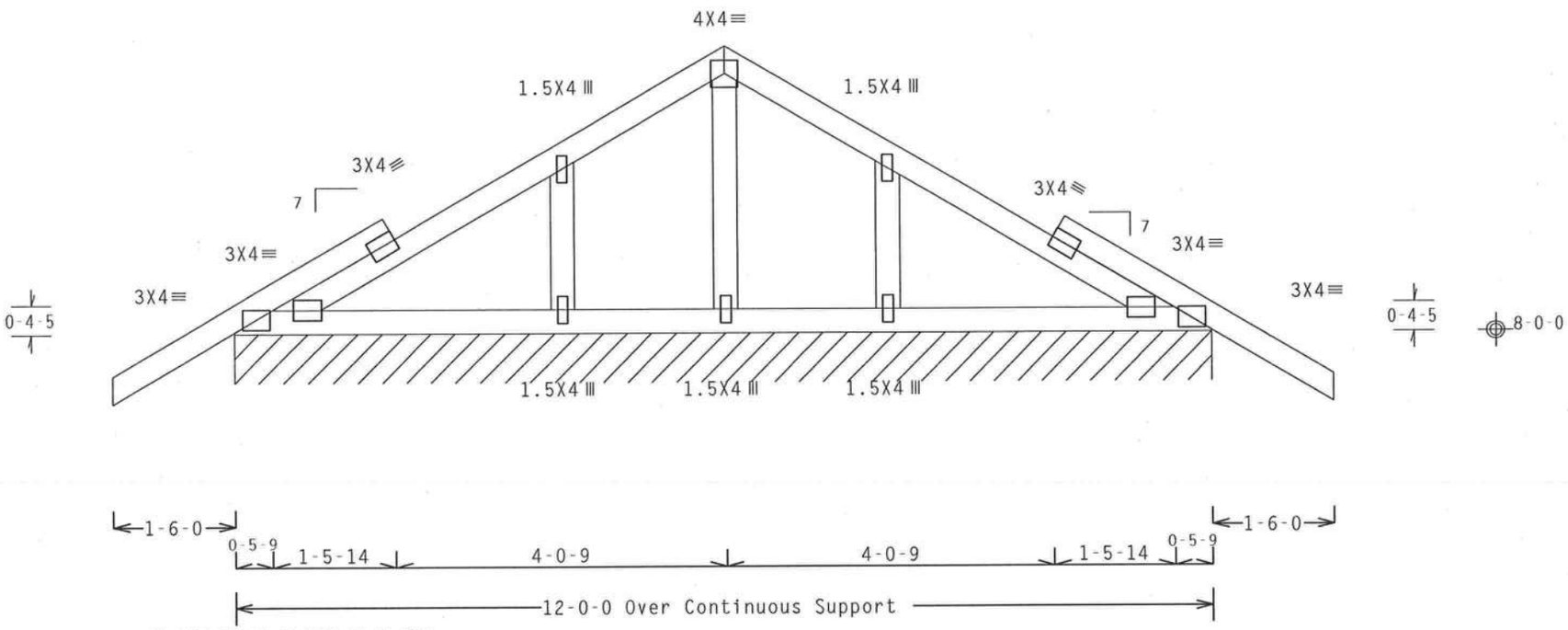

R=102 PLF U=48 PLF W=12-0-0

Design Crit: TPI-2002(STD)/FBC
Cq/RT=1.00(1.25)/10(0) 7.04.0

PLT TYP. Wave QTY:1 FL/-/4/-/-/R/- Scale =.5"/Ft.

ALPINE
Alpine Engineered Products, Inc.
1950 Marley Drive
Haines City, FL 33844
FL Certificate of Authorization # 567

WARNING TRUSSES REQUIRE EXTREME CARE IN FABRICATION, HANDLING, SHIPPING, INSTALLING AND BRACING. REFER TO BCSI 1-03 (BUILDING COMPONENT SAFETY INFORMATION), PUBLISHED BY TPI (TRUSS PLATE INSTITUTE, 583 D'ONOFRIO DR., SUITE 200, MADISON, WI 53719) AND WTCA (WOOD TRUSS COUNCIL OF AMERICA, 6300 ENTERPRISE LN, MADISON, WI 53719) FOR SAFETY PRACTICES PRIOR TO PERFORMING THESE FUNCTIONS. UNLESS OTHERWISE INDICATED, TOP CHORD SHALL HAVE PROPERLY ATTACHED STRUCTURAL PANELS AND BOTTOM CHORD SHALL HAVE A PROPERLY ATTACHED RIGID CEILING.

IMPORTANTFURNISH A COPY OF THIS DESIGN TO THE INSTALLATION CONTRACTOR. ALPINE ENGINEERED PRODUCTS, INC. SHALL NOT BE RESPONSIBLE FOR ANY DEVIATION FROM THIS DESIGN; ANY FAILURE TO BUILD THE TRUSS IN CONFORMANCE WITH TPI; OR FABRICATING, HANDLING, SHIPPING, INSTALLING & BRACING OF TRUSSES. DESIGN CONFORMS WITH APPLICABLE PROVISIONS OF NDS (NATIONAL DESIGN SPEC. BY AF&PA) AND TPI. ALPINE CONNECTOR PLATES ARE MADE OF 20/18/16GA (W.H/S/K) ASTM A653 GRADE 40/60 (W, K/H,S) GALV. STEEL. APPLY PLATES TO EACH FACE OF TRUSS AND, UNLESS OTHERWISE LOCATED ON THIS DESIGN, POSITION PER DRAWINGS 160A-Z. ANY INSPECTION OF PLATES FOLLOWED BY (1) SHALL BE PER ANNEX A3 OF TPI1-2002 SEC.3. A SEAL ON THIS DRAWING INDICATES ACCEPTANCE OF PROFESSIONAL ENGINEERING RESPONSIBILITY SOLELY FOR THE TRUSS COMPONENT DESIGN SHOWN. THE SUITABILITY AND USE OF THIS COMPONENT FOR ANY BUILDING IS THE RESPONSIBILITY OF THE BUILDING DESIGNER PER ANSI/TPI 1 SEC. 2.

ARTHUR R. FISHER
LICENSE
No. 59687
STATE OF FLORIDA
PROFESSIONAL ENGINEER

Dec 07 '05

TC LL	20.0 PSF	REF	R487-- 25421
TC DL	10.0 PSF	DATE	12/07/05
BC DL	10.0 PSF	DRW	HCUSR487 05341043
BC LL	0.0 PSF	HC-ENG	JB/AF
TOT.LD.	40.0 PSF	SEQN-	17749 REV
DUR.FAC.	1.25		
SPACING	24.0"	JREF-	1SSS487_Z09

(5-509-STANLEY CRAWFORD-48 TURKEY RUN FGE)

Top chord 2x4 SP #2 Dense
Bot chord 2x4 SP #2 Dense
Webs 2x4 SP #3

SPECIAL LOADS
------(LUMBER DUR.FAC.=1.25 / PLATE DUR.FAC.=1.25)

TC - From	82 PLF at	-1.50 to	82 PLF at	12.79
BC - From	4 PLF at	-1.50 to	4 PLF at	0.00
BC - From	20 PLF at	0.00 to	20 PLF at	11.29
BC - From	4 PLF at	11.29 to	4 PLF at	12.79

110 mph wind, 9.40 ft mean hgt, ASCE 7-98, CLOSED bldg, Located anywhere in roof, CAT II, EXP B, wind TC DL=2.8 psf, wind BC DL=2.2 psf.

Dead loads are stated on projected horizontal area basis.

See DWGS A11015EC1103 & GBLLETIN0405 for more requirements.

Deflection meets L/360 live and L/240 total load. Creep increase factor for dead load is 1.50.

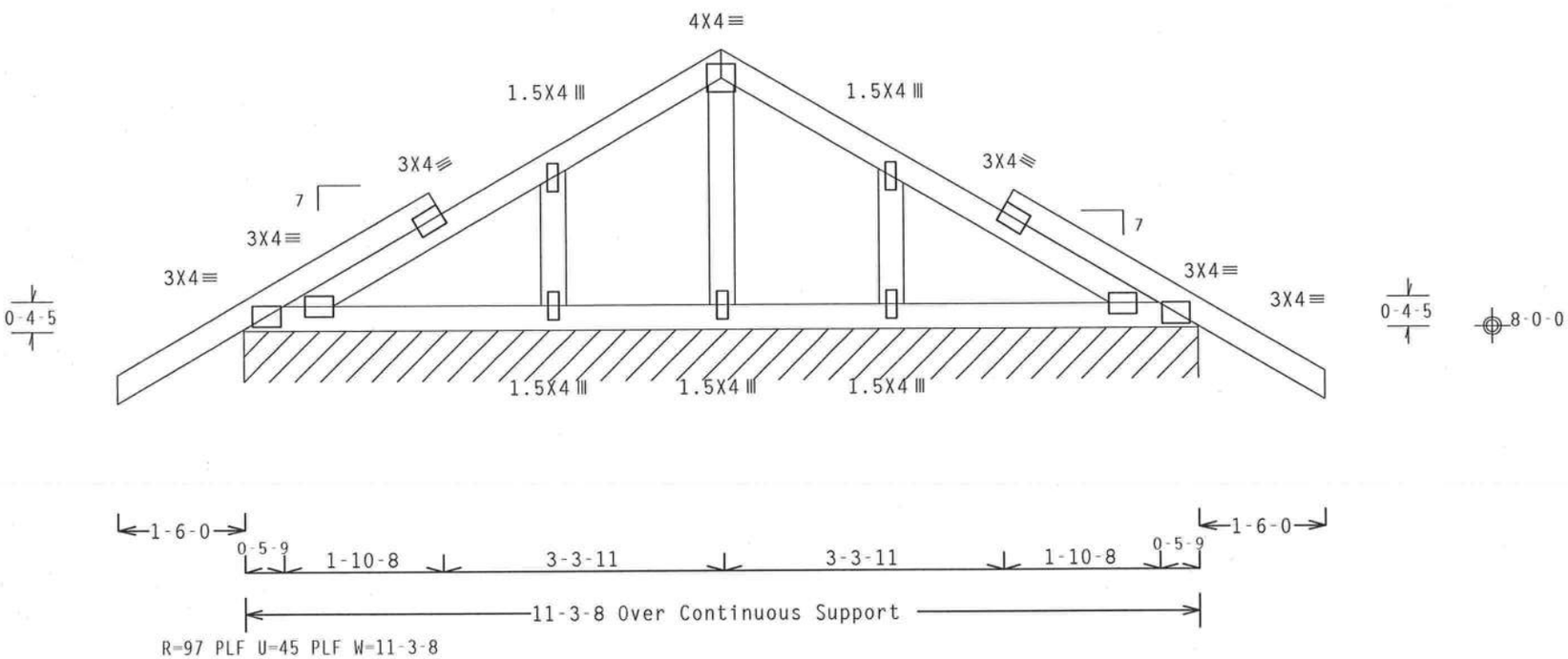

Design Crit: TPI-2002(STD)/FBC
PLT TYP. Wave Cq/RT=1.00(1.25)/10(0) 7.04.08 QTY:1 FL/-/4/-/-/R/- Scale =.5"/Ft.

ALPINE
Alpine Engineered Products, Inc.
1950 Marley Drive
Haines City, FL 33844
FL Certificate of Authorization # 567

WARNING TRUSSES REQUIRE EXTREME CARE IN FABRICATION, HANDLING, SHIPPING, INSTALLING AND BRACING. REFER TO BCSI 1-03 (BUILDING COMPONENT SAFETY INFORMATION), PUBLISHED BY TPI (TRUSS PLATE INSTITUTE, 583 D'ONOFRIO DR., SUITE 200, MADISON, WI 53719) AND WTCA (WOOD TRUSS COUNCIL OF AMERICA, 6300 ENTERPRISE LN, MADISON, WI 53719) FOR SAFETY PRACTICES PRIOR TO PERFORMING THESE FUNCTIONS. UNLESS OTHERWISE INDICATED, TOP CHORD SHALL HAVE PROPERLY ATTACHED STRUCTURAL PANELS AND BOTTOM CHORD SHALL HAVE A PROPERLY ATTACHED RIGID CEILING.

IMPORTANTFURNISH A COPY OF THIS DESIGN TO THE INSTALLATION CONTRACTOR. ALPINE ENGINEERED PRODUCTS, INC. SHALL NOT BE RESPONSIBLE FOR ANY DEVIATION FROM THIS DESIGN; ANY FAILURE TO BUILD THE TRUSS IN CONFORMANCE WITH TPI; OR FABRICATING, HANDLING, SHIPPING, INSTALLING & BRACING OF TRUSSES. DESIGN CONFORMS WITH APPLICABLE PROVISIONS OF NDS (NATIONAL DESIGN SPEC. BY AF&PA) AND TPI. ALPINE CONNECTOR PLATES ARE MADE OF 20/18/16GA (W,H/S/K) ASTM A653 GRADE 40/60 (W, K/H,S) GALV. STEEL. APPLY PLATES TO EACH FACE OF TRUSS AND, UNLESS OTHERWISE LOCATED ON THIS DESIGN, POSITION PER DRAWINGS 160A-Z. ANY INSPECTION OF PLATES FOLLOWED BY (1) SHALL BE PER ANNEX A3 OF TPI1-2002 SEC.3. A SEAL ON THIS DRAWING INDICATES ACCEPTANCE OF PROFESSIONAL ENGINEERING RESPONSIBILITY SOLELY FOR THE TRUSS COMPONENT DESIGN SHOWN. THE SUITABILITY AND USE OF THIS COMPONENT FOR ANY BUILDING IS THE RESPONSIBILITY OF THE BUILDING DESIGNER PER ANSI/TPI 1 SEC. 2.

ARTHUR R. FISHER
LICENSE
No. 59687
STATE OF FLORIDA
PROFESSIONAL ENGINEER
Dec 07, '05

TC LL	20.0 PSF	REF	R487-- 25422
TC DL	10.0 PSF	DATE	12/07/05
BC DL	10.0 PSF	DRW	HCUSR487 05341044
BC LL	0.0 PSF	HC-ENG	JB/AF
TOT.LD.	40.0 PSF	SEQN-	17737 REV
DUR.FAC.	1.25		
SPACING	24.0"	JREF-	1SSS487_Z09

(3-509-STANLEY CRAWFORD-46-TURKEY RUN - HJ7)

Top chord 2x4 SP #2 Dense
Bot chord 2x4 SP #2 Dense
Webs 2x4 SP #3

Dead loads are stated on projected horizontal area basis.

Deflection meets L/360 live and L/240 total load. Creep increase factor for dead load is 1.50.

110 mph wind, 15.00 ft mean hgt, ASCE 7-98, CLOSED bldg, Located anywhere in roof, CAT II, EXP B, wind TC DL=2.8 psf, wind BC DL=2.2 psf.

Hipjack supports 7-0-0 setback jacks with no webs.

Provide (2) 16d common nails(0.162"x3.5"), toe nailed at Top chord.
Provide (3) 16d common nails(0.162"x3.5"), toe nailed at Bot chord.

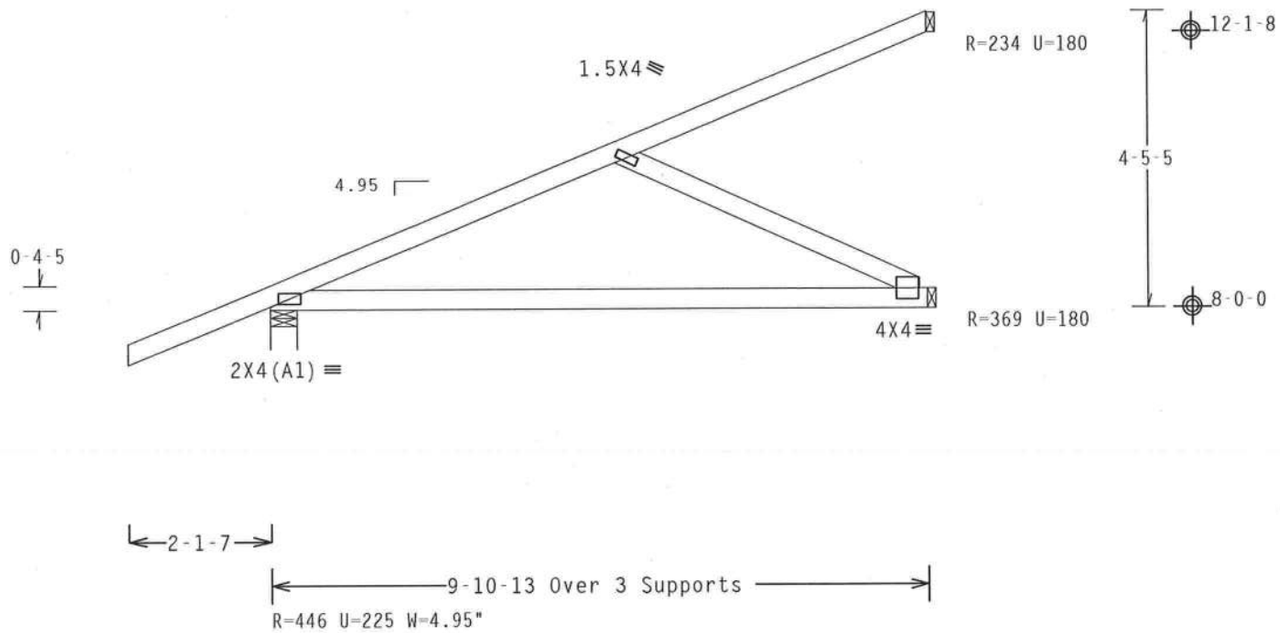

Design Crit: TPI-2002(STD)/FBC
Cq/RT=1.00(1.25)/10(0) 7.04.08 QTY:3 FL/-/4/-/-/R/-

PLT TYP. Wave

Scale =.375"/Ft.

ALPINE
Alpine Engineered Products, Inc.
1950 Marley Drive
Haines City, FL 33844
FL Certificate of Authorization # 567

WARNING TRUSSES REQUIRE EXTREME CARE IN FABRICATION, HANDLING, SHIPPING, INSTALLING AND BRACING. REFER TO BCSI 1-03 (BUILDING COMPONENT SAFETY INFORMATION), PUBLISHED BY TPI (TRUSS PLATE INSTITUTE, 583 D'ONOFRIO DR., SUITE 200, MADISON, WI 53719) AND WTCA (WOOD TRUSS COUNCIL OF AMERICA, 6300 ENTERPRISE LN, MADISON, WI 53719) FOR SAFETY PRACTICES PRIOR TO PERFORMING THESE FUNCTIONS. UNLESS OTHERWISE INDICATED, TOP CHORD SHALL HAVE PROPERLY ATTACHED STRUCTURAL PANELS AND BOTTOM CHORD SHALL HAVE A PROPERLY ATTACHED RIGID CEILING.

IMPORTANTFURNISH A COPY OF THIS DESIGN TO THE INSTALLATION CONTRACTOR. ALPINE ENGINEERED PRODUCTS, INC. SHALL NOT BE RESPONSIBLE FOR ANY DEVIATION FROM THIS DESIGN; ANY FAILURE TO BUILD THE TRUSS IN CONFORMANCE WITH TPI; OR FABRICATING, HANDLING, SHIPPING, INSTALLING & BRACING OF TRUSSES. DESIGN CONFORMS WITH APPLICABLE PROVISIONS OF NDS (NATIONAL DESIGN SPEC, BY AF&PA) AND TPI. ALPINE CONNECTOR PLATES ARE MADE OF 20/18/16GA (W,H/S/K) ASTM A653 GRADE 40/60 (W, K/H,S) GALV. STEEL. APPLY PLATES TO EACH FACE OF TRUSS AND, UNLESS OTHERWISE LOCATED ON THIS DESIGN, POSITION PER DRAWINGS 160A-Z. ANY INSPECTION OF PLATES FOLLOWED BY (I) SHALL BE PER ANNEX A3 OF TPI1-2002 SEC.3. A SEAL ON THIS DRAWING INDICATES ACCEPTANCE OF PROFESSIONAL ENGINEERING RESPONSIBILITY SOLELY FOR THE TRUSS COMPONENT DESIGN SHOWN. THE SUITABILITY AND USE OF THIS COMPONENT FOR ANY BUILDING IS THE RESPONSIBILITY OF THE BUILDING DESIGNER PER ANSI/TPI 1 SEC. 2.

ARTHUR R. FISHER
LICENSE
No. 59687
STATE OF FLORIDA
PROFESSIONAL ENGINEER

Dec 07 05

TC LL	20.0 PSF	REF R487-- 25423
TC DL	10.0 PSF	DATE 12/07/05
BC DL	10.0 PSF	DRW HCUSR487 05341045
BC LL	0.0 PSF	HC-ENG JB/AF
TOT.LD.	40.0 PSF	SEQN- 17750
DUR.FAC.	1.25	
SPACING	24.0"	JREF- 1SSS487_Z09

(5-509-STANLEY CRAWFORD-48 TURKEY RUN - EJ7)

Top chord 2x4 SP #2 Dense
Bot chord 2x4 SP #2 Dense

Dead loads are stated on projected horizontal area basis.

Provide (2) 16d common nails(0.162"x3.5"), toe nailed at Top chord.
Provide (2) 16d common nails(0.162"x3.5"), toe nailed at Bot chord.

110 mph wind, 9.96 ft mean hgt, ASCE 7-98, CLOSED bldg, not located within 4.50 ft from roof edge, CAT II, EXP B, wind TC DL=2.8 psf, wind BC DL=2.2 psf.

Deflection meets L/360 live and L/240 total load. Creep increase factor for dead load is 1.50.

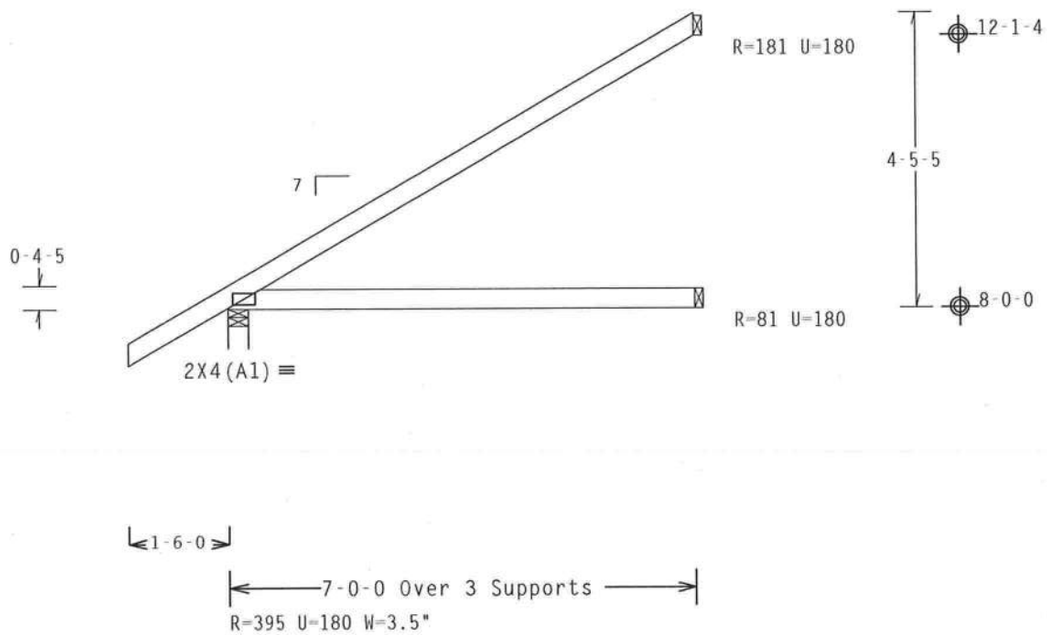

Design Crit: TPI-2002(STD)/FBC
Cq/RT=1.00(1.25)/10(0) 7.04.08 TY:22 FL/-/4/-/-/R/-

PLT TYP. Wave

Scale =.375"/Ft.

ALPINE
Alpine Engineered Products, Inc.
1950 Marley Drive
Haines City, FL 33844
FL Certificate of Authorization # 567

WARNING TRUSSES REQUIRE EXTREME CARE IN FABRICATION, HANDLING, SHIPPING, INSTALLING AND BRACING. REFER TO BCSI 1-03 (BUILDING COMPONENT SAFETY INFORMATION), PUBLISHED BY TPI (TRUSS PLATE INSTITUTE, 583 D'ONOFRIO DR., SUITE 200, MADISON, WI 53719) AND WTCA (WOOD TRUSS COUNCIL OF AMERICA, 6300 ENTERPRISE LN, MADISON, WI 53719) FOR SAFETY PRACTICES PRIOR TO PERFORMING THESE FUNCTIONS. UNLESS OTHERWISE INDICATED, TOP CHORD SHALL HAVE PROPERLY ATTACHED STRUCTURAL PANELS AND BOTTOM CHORD SHALL HAVE A PROPERLY ATTACHED RIGID CEILING.

IMPORTANTFURNISH A COPY OF THIS DESIGN TO THE INSTALLATION CONTRACTOR. ALPINE ENGINEERED PRODUCTS, INC. SHALL NOT BE RESPONSIBLE FOR ANY DEVIATION FROM THIS DESIGN; ANY FAILURE TO BUILD THE TRUSS IN CONFORMANCE WITH TPI; OR FABRICATING, HANDLING, SHIPPING, INSTALLING & BRACING OF TRUSSES. DESIGN CONFORMS WITH APPLICABLE PROVISIONS OF NDS (NATIONAL DESIGN SPEC. BY AF&PA) AND TPI. ALPINE CONNECTOR PLATES ARE MADE OF 20/18/16GA (W,H/S/K) ASTM A653 GRADE 40/60 (W, K/H,S) GALV. STEEL. APPLY PLATES TO EACH FACE OF TRUSS AND, UNLESS OTHERWISE LOCATED ON THIS DESIGN, POSITION PER DRAWINGS 160A-Z. ANY INSPECTION OF PLATES FOLLOWED BY (1) SHALL BE PER ANNEX A3 OF TPI1-2002 SEC.3. A SEAL ON THIS DRAWING INDICATES ACCEPTANCE OF PROFESSIONAL ENGINEERING RESPONSIBILITY SOLELY FOR THE TRUSS COMPONENT DESIGN SHOWN. THE SUITABILITY AND USE OF THIS COMPONENT FOR ANY BUILDING IS THE RESPONSIBILITY OF THE BUILDING DESIGNER PER ANSI/TPI 1 SEC. 2.

ARTHUR R. FISHER
LICENSE
No. 59687
STATE OF FLORIDA
PROFESSIONAL ENGINEER

Dec 07 '05

TC LL	20.0 PSF	REF	R487-- 25424
TC DL	10.0 PSF	DATE	12/07/05
BC DL	10.0 PSF	DRW	HCUSR487 05341046
BC LL	0.0 PSF	HC-ENG	JB/AF
TOT.LD.	40.0 PSF	SEQN-	17754
DUR.FAC.	1.25		
SPACING	24.0"	JREF-	1SSS487_Z09

(5-509-STANLEY CRAWFORD-48 TURKEY RUN CJ9)

Top chord 2x4 SP #2 Dense
Bot chord 2x4 SP #2 Dense

Dead loads are stated on projected horizontal area basis.

Provide (2) 16d common nails(0.162"x3.5"), toe nailed at Top chord.
Provide (2) 16d common nails(0.162"x3.5"), toe nailed at Bot chord.

110 mph wind, 9.38 ft mean hgt, ASCE 7-98, CLOSED bldg, not located within 4.50 ft from roof edge, CAT II, EXP B, wind TC DL=2.8 psf, wind BC DL=2.2 psf.

Deflection meets L/360 live and L/240 total load. Creep increase factor for dead load is 1.50.

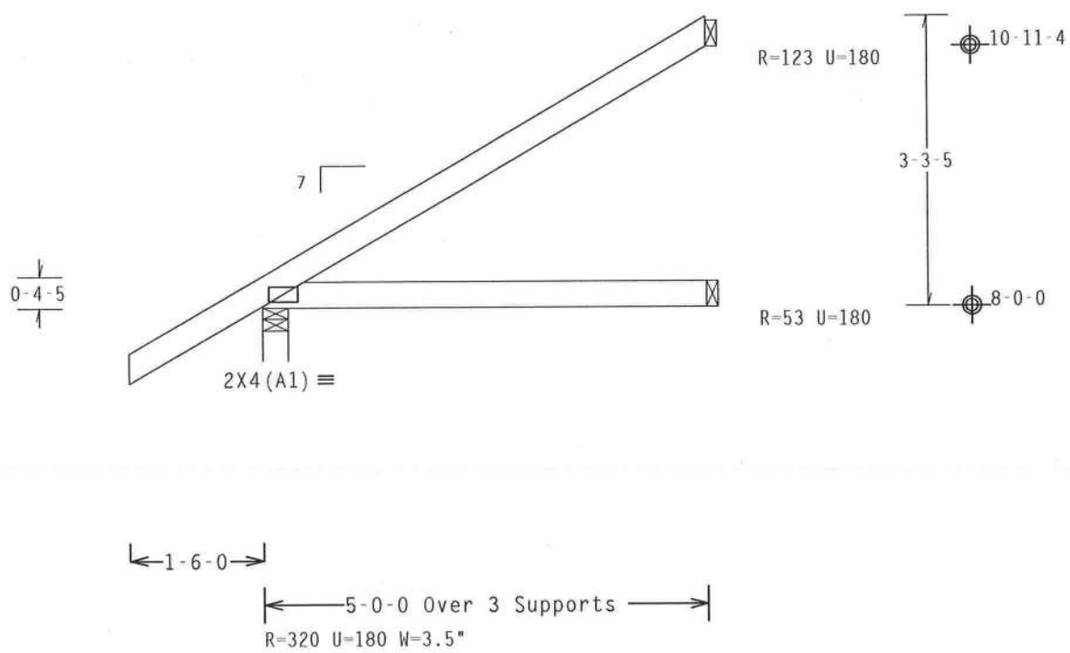

Design Crit: TPI-2002(STD)/FBC
Cq/RT=1.00(1.25)/10(0) 7.04.08 ... Y:6 FL/-/4/-/-/R/-

PLT TYP. Wave

Scale =.5"/Ft.

ALPINE
Alpine Engineered Products, Inc.
1950 Marley Drive
Haines City, FL 33844
FL Certificate of Authorization # 567

WARNING TRUSSES REQUIRE EXTREME CARE IN FABRICATION, HANDLING, SHIPPING, INSTALLING AND BRACING. REFER TO BCSI 1-03 (BUILDING COMPONENT SAFETY INFORMATION), PUBLISHED BY TPI (TRUSS PLATE INSTITUTE, 583 D'ONOFRIO DR., SUITE 200, MADISON, WI 53719) AND WTCA (WOOD TRUSS COUNCIL OF AMERICA, 6300 ENTERPRISE LN, MADISON, WI 53719) FOR SAFETY PRACTICES PRIOR TO PERFORMING THESE FUNCTIONS. UNLESS OTHERWISE INDICATED, TOP CHORD SHALL HAVE PROPERLY ATTACHED STRUCTURAL PANELS AND BOTTOM CHORD SHALL HAVE A PROPERLY ATTACHED RIGID CEILING.

IMPORTANTFURNISH A COPY OF THIS DESIGN TO THE INSTALLATION CONTRACTOR. ALPINE ENGINEERED PRODUCTS, INC. SHALL NOT BE RESPONSIBLE FOR ANY DEVIATION FROM THIS DESIGN; ANY FAILURE TO BUILD THE TRUSS IN CONFORMANCE WITH TPI; OR FABRICATING, HANDLING, SHIPPING, INSTALLING & BRACING OF TRUSSES. DESIGN CONFORMS WITH APPLICABLE PROVISIONS OF NDS (NATIONAL DESIGN SPEC. BY AF&PA) AND TPI. ALPINE CONNECTOR PLATES ARE MADE OF 20/18/16GA (W.H/S/K) ASTM A653 GRADE 40/60 (W. K/H.S) GALV. STEEL. APPLY PLATES TO EACH FACE OF TRUSS AND, UNLESS OTHERWISE LOCATED ON THIS DESIGN, POSITION PER DRAWINGS 160A-Z. ANY INSPECTION OF PLATES FOLLOWED BY (1) SHALL BE PER ANNEX A3 OF TPI1-2002 SEC.3. A SEAL ON THIS DRAWING INDICATES ACCEPTANCE OF PROFESSIONAL ENGINEERING RESPONSIBILITY SOLELY FOR THE TRUSS COMPONENT DESIGN SHOWN. THE SUITABILITY AND USE OF THIS COMPONENT FOR ANY BUILDING IS THE RESPONSIBILITY OF THE BUILDING DESIGNER PER ANSI/TPI 1 SEC. 2.

ARTHUR R. FISHER LICENSE No. 59687 STATE OF FLORIDA PROFESSIONAL ENGINEER

Dec 0 '05

TC LL	20.0 PSF	REF	R487-- 25425
TC DL	10.0 PSF	DATE	12/07/05
BC DL	10.0 PSF	DRW	HCUSR487 05341047
BC LL	0.0 PSF	HC-ENG	JB/AF
TOT.LD.	40.0 PSF	SEQN-	17751
DUR.FAC.	1.25		
SPACING	24.0"	JREF-	1SSS487_Z09

(5-509-STANLEY CRAWFORD-48 TURKEY RUN - CJ3)

Top chord 2x4 SP #2 Dense
Bot chord 2x4 SP #2 Dense

Dead loads are stated on projected horizontal area basis.

Provide (2) 16d common nails(0.162"x3.5"), toe nailed at Top chord.
Provide (2) 16d common nails(0.162"x3.5"), toe nailed at Bot chord.

110 mph wind, 8.80 ft mean hgt, ASCE 7-98, CLOSED bldg, Located anywhere in roof, CAT II, EXP B, wind TC DL=2.8 psf, wind BC DL=2.2 psf.

Deflection meets L/360 live and L/240 total load. Creep increase factor for dead load is 1.50.

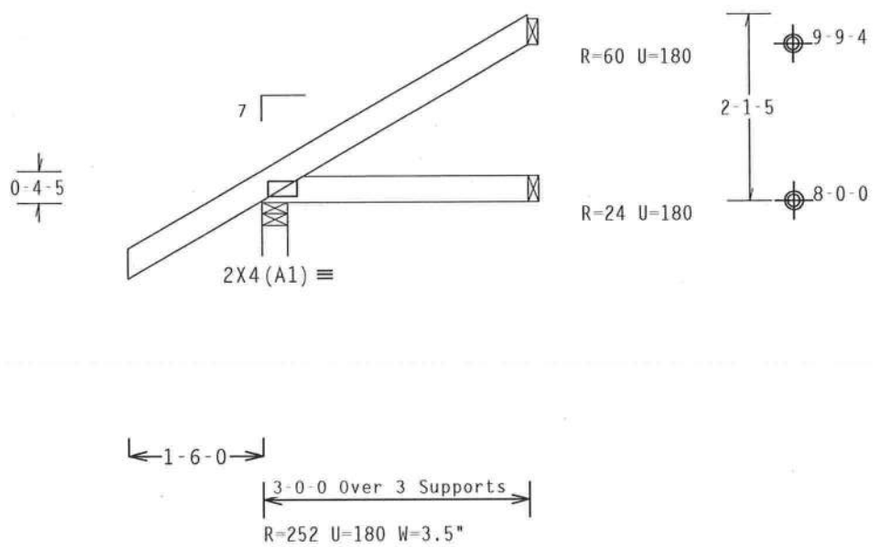

Design Crit: TPI-2002(STD)/FBC
PLT TYP. Wave Cq/RT=1.00(1.25)/10(0) 7.04.08 QTY:6 FL/-/4/-/-/R/- Scale =.5"/Ft.

ALPINE
Alpine Engineered Products, Inc.
1950 Marley Drive
Haines City, FL 33844
FL Certificate of Authorization # 567

WARNING TRUSSES REQUIRE EXTREME CARE IN FABRICATION, HANDLING, SHIPPING, INSTALLING AND BRACING. REFER TO BCSI 1-03 (BUILDING COMPONENT SAFETY INFORMATION), PUBLISHED BY TPI (TRUSS PLATE INSTITUTE, 583 D'ONOFRIO DR., SUITE 200, MADISON, WI 53719) AND WTCA (WOOD TRUSS COUNCIL OF AMERICA, 6300 ENTERPRISE LN, MADISON, WI 53719) FOR SAFETY PRACTICES PRIOR TO PERFORMING THESE FUNCTIONS. UNLESS OTHERWISE INDICATED, TOP CHORD SHALL HAVE PROPERLY ATTACHED STRUCTURAL PANELS AND BOTTOM CHORD SHALL HAVE A PROPERLY ATTACHED RIGID CEILING.

IMPORTANT FURNISH A COPY OF THIS DESIGN TO THE INSTALLATION CONTRACTOR. ALPINE ENGINEERED PRODUCTS, INC. SHALL NOT BE RESPONSIBLE FOR ANY DEVIATION FROM THIS DESIGN; ANY FAILURE TO BUILD THE TRUSS IN CONFORMANCE WITH TPI; OR FABRICATING, HANDLING, SHIPPING, INSTALLING & BRACING OF TRUSSES. DESIGN CONFORMS WITH APPLICABLE PROVISIONS OF NDS (NATIONAL DESIGN SPEC. BY AF&PA) AND TPI. ALPINE CONNECTOR PLATES ARE MADE OF 20/18/16GA (W,H/S/K) ASTM A653 GRADE 40/60 (W, K/H,S) GALV. STEEL. APPLY PLATES TO EACH FACE OF TRUSS AND, UNLESS OTHERWISE LOCATED ON THIS DESIGN, POSITION PER DRAWINGS 160A-2. ANY INSPECTION OF PLATES FOLLOWED BY (I) SHALL BE PER ANNEX A3 OF TPI1-2002 SEC.3. A SEAL ON THIS DRAWING INDICATES ACCEPTANCE OF PROFESSIONAL ENGINEERING RESPONSIBILITY SOLELY FOR THE TRUSS COMPONENT DESIGN SHOWN. THE SUITABILITY AND USE OF THIS COMPONENT FOR ANY BUILDING IS THE RESPONSIBILITY OF THE BUILDING DESIGNER PER ANSI/TPI 1 SEC. 2.

ARTHUR R. FISHER
LICENSE
No. 59687
STATE OF FLORIDA
PROFESSIONAL ENGINEER
Dec 07 '05

TC LL	20.0 PSF	REF	R487-- 25426
TC DL	10.0 PSF	DATE	12/07/05
BC DL	10.0 PSF	DRW	HCUSR487 05341048
BC LL	0.0 PSF	HC-ENG	JB/AF
TOT.LD.	40.0 PSF	SEQN-	17752
DUR.FAC.	1.25		
SPACING	24.0"	JREF-	1SSS487_Z09

(5-509-STANLEY CRAWFORD-48-TURKEY RUN - CJ1)

Top chord 2x4 SP #2 Dense
Bot chord 2x4 SP #2 Dense

Dead loads are stated on projected horizontal area basis.

Provide (2) 16d common nails(0.162"x3.5"), toe nailed at Top chord.
Provide (2) 16d common nails(0.162"x3.5"), toe nailed at Bot chord.

110 mph wind, 8.21 ft mean hgt, ASCE 7-98, CLOSED bldg, Located anywhere in roof, CAT II, EXP B, wind TC DL=2.8 psf, wind BC DL=2.2 psf.

Deflection meets L/360 live and L/240 total load. Creep increase factor for dead load is 1.50.

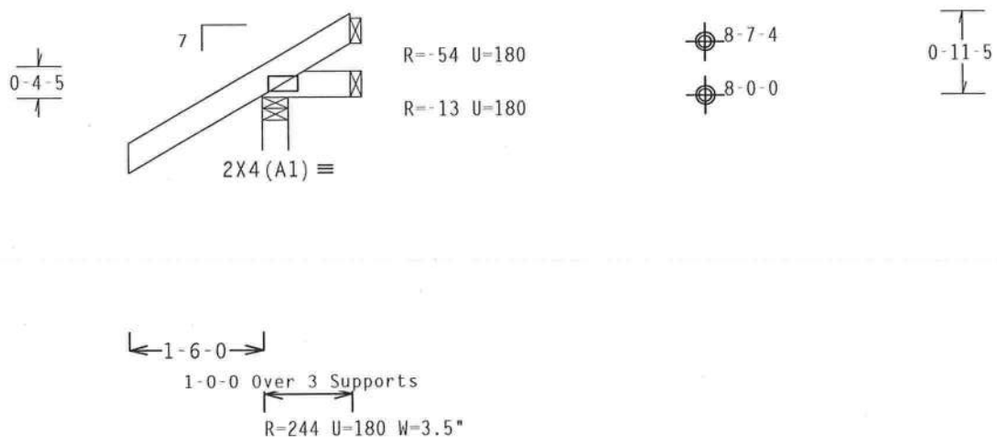

Design Crit: TPI-2002(STD)/FBC
PLT TYP. Wave Cq/RT=1.00(1.25)/10(0) 7.04.08 QTY:6 FL/-/4/-/-/R/- Scale =.5"/Ft.

ALPINE
Alpine Engineered Products, Inc.
1950 Marley Drive
Haines City, FL 33844
FL Certificate of Authorization # 567

WARNING TRUSSES REQUIRE EXTREME CARE IN FABRICATION, HANDLING, SHIPPING, INSTALLING AND BRACING. REFER TO BCSI 1-03 (BUILDING COMPONENT SAFETY INFORMATION), PUBLISHED BY TPI (TRUSS PLATE INSTITUTE, 583 D'ONOFRIO DR., SUITE 200, MADISON, WI 53719) AND WTCA (WOOD TRUSS COUNCIL OF AMERICA, 6300 ENTERPRISE LN, MADISON, WI 53719) FOR SAFETY PRACTICES PRIOR TO PERFORMING THESE FUNCTIONS. UNLESS OTHERWISE INDICATED, TOP CHORD SHALL HAVE PROPERLY ATTACHED STRUCTURAL PANELS AND BOTTOM CHORD SHALL HAVE A PROPERLY ATTACHED RIGID CEILING.

IMPORTANTFURNISH A COPY OF THIS DESIGN TO THE INSTALLATION CONTRACTOR. ALPINE ENGINEERED PRODUCTS, INC. SHALL NOT BE RESPONSIBLE FOR ANY DEVIATION FROM THIS DESIGN; ANY FAILURE TO BUILD THE TRUSS IN CONFORMANCE WITH TPI; OR FABRICATING, HANDLING, SHIPPING, INSTALLING & BRACING OF TRUSSES. DESIGN CONFORMS WITH APPLICABLE PROVISIONS OF NDS (NATIONAL DESIGN SPEC, BY AF&PA) AND TPI. ALPINE CONNECTOR PLATES ARE MADE OF 20/18/16GA (W,H/S/K) ASTM A653 GRADE 40/60 (W, K/H,S) GALV. STEEL. APPLY PLATES TO EACH FACE OF TRUSS AND, UNLESS OTHERWISE LOCATED ON THIS DESIGN, POSITION PER DRAWINGS 160A-Z. ANY INSPECTION OF PLATES FOLLOWED BY (1) SHALL BE PER ANNEX A3 OF TPI1-2002 SEC.3. A SEAL ON THIS DRAWING INDICATES ACCEPTANCE OF PROFESSIONAL ENGINEERING RESPONSIBILITY SOLELY FOR THE TRUSS COMPONENT DESIGN SHOWN. THE SUITABILITY AND USE OF THIS COMPONENT FOR ANY BUILDING IS THE RESPONSIBILITY OF THE BUILDING DESIGNER PER ANSI/TPI 1 SEC. 2.

ARTHUR R. FISHER
LICENSE
No.59687
STATE OF FLORIDA
PROFESSIONAL ENGINEER
DEC 07 '05

TC LL	20.0 PSF	REF	R487-- 25427
TC DL	10.0 PSF	DATE	12/07/05
BC DL	10.0 PSF	DRW	HCUSR487 05341049
BC LL	0.0 PSF	HC-ENG	JB/AF
TOT.LD.	40.0 PSF	SEQN-	17753
DUR.FAC.	1.25		
SPACING	24.0"	JREF-	1SSS487_Z09

(5-509-STANLEY CRAWFORD-46 TURKEY RUN EJ7T)

Top chord 2x4 SP #2 Dense
Bot chord 2x4 SP #2 Dense
Webs 2x4 SP #3

Dead loads are stated on projected horizontal area basis.

Provide (2) 16d common nails(0.162"x3.5"), toe nailed at Top chord.
Provide (2) 16d common nails(0.162"x3.5"), toe nailed at Bot chord.

110 mph wind, 9.96 ft mean hgt, ASCE 7-98, CLOSED bldg, not located within 4.50 ft from roof edge, CAT II, EXP B, wind TC DL=2.8 psf, wind BC DL=2.2 psf.

Deflection meets L/360 live and L/240 total load. Creep increase factor for dead load is 1.50.

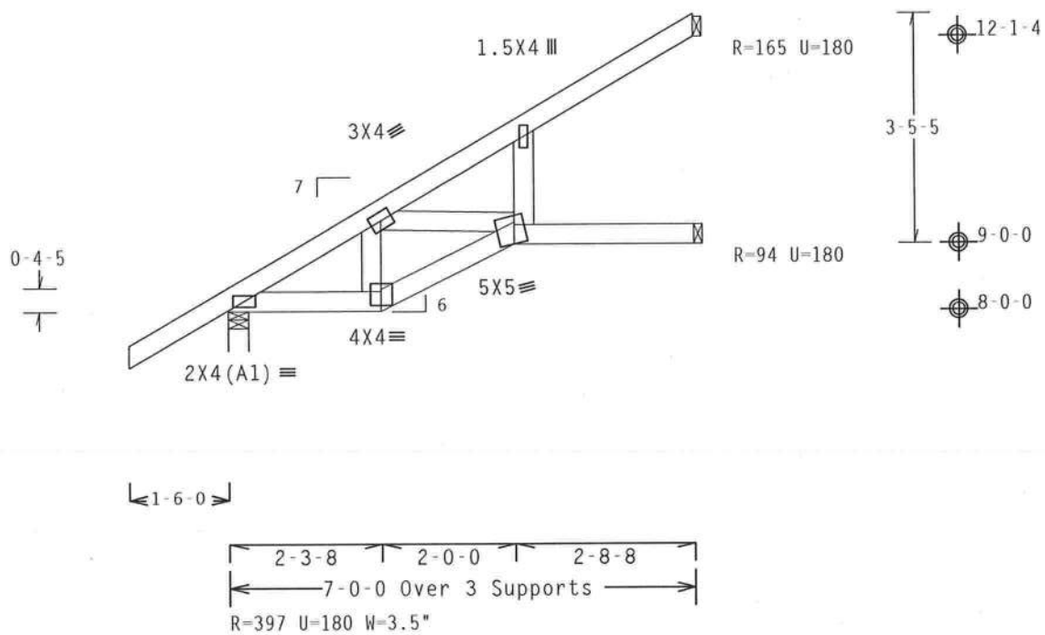

Design Crit: TPI-2002(STD)/FBC
Cq/RT=1.00(1.25)/10(0) 7.04.0 QTY:3 FL/-/4/-/-/R/-

PLT TYP. Wave

Scale =.375"/Ft.

ALPINE
Alpine Engineered Products, Inc.
1950 Marley Drive
Haines City, FL 33844
FL Certificate of Authorization # 567

WARNING TRUSSES REQUIRE EXTREME CARE IN FABRICATION, HANDLING, SHIPPING, INSTALLING AND BRACING. REFER TO BCSI 1-03 (BUILDING COMPONENT SAFETY INFORMATION), PUBLISHED BY TPI (TRUSS PLATE INSTITUTE, 583 D'ONOFRIO DR., SUITE 200, MADISON, WI 53719) AND WTCA (WOOD TRUSS COUNCIL OF AMERICA, 6300 ENTERPRISE LN, MADISON, WI 53719) FOR SAFETY PRACTICES PRIOR TO PERFORMING THESE FUNCTIONS. UNLESS OTHERWISE INDICATED, TOP CHORD SHALL HAVE PROPERLY ATTACHED STRUCTURAL PANELS AND BOTTOM CHORD SHALL HAVE A PROPERLY ATTACHED RIGID CEILING.

IMPORTANT FURNISH A COPY OF THIS DESIGN TO THE INSTALLATION CONTRACTOR. ALPINE ENGINEERED PRODUCTS, INC. SHALL NOT BE RESPONSIBLE FOR ANY DEVIATION FROM THIS DESIGN; ANY FAILURE TO BUILD THE TRUSS IN CONFORMANCE WITH TPI; OR FABRICATING, HANDLING, SHIPPING, INSTALLING & BRACING OF TRUSSES. DESIGN CONFORMS WITH APPLICABLE PROVISIONS OF NDS (NATIONAL DESIGN SPEC, BY AF&PA) AND TPI. ALPINE CONNECTOR PLATES ARE MADE OF 20/18/16GA (W,H/S/K) ASTM A653 GRADE 40/60 (W, K/H,S) GALV. STEEL. APPLY PLATES TO EACH FACE OF TRUSS AND, UNLESS OTHERWISE LOCATED ON THIS DESIGN, POSITION PER DRAWINGS 160A-Z. ANY INSPECTION OF PLATES FOLLOWED BY (I) SHALL BE PER ANNEX A3 OF TPI1-2002 SEC.3. A SEAL ON THIS DRAWING INDICATES ACCEPTANCE OF PROFESSIONAL ENGINEERING RESPONSIBILITY SOLELY FOR THE TRUSS COMPONENT DESIGN SHOWN. THE SUITABILITY AND USE OF THIS COMPONENT FOR ANY BUILDING IS THE RESPONSIBILITY OF THE BUILDING DESIGNER PER ANSI/TPI 1 SEC. 2.

ARTHUR R. FISHER
LICENSE
No.59687
STATE OF FLORIDA
PROFESSIONAL ENGINEER

Dec 07 '05

TC LL	20.0 PSF	REF	R487-- 25428
TC DL	10.0 PSF	DATE	12/07/05
BC DL	10.0 PSF	DRW	HCUSR487 05341010
BC LL	0.0 PSF	HC-ENG	JB/AF *
TOT.LD.	40.0 PSF	SEQN-	17765
DUR.FAC.	1.25		
SPACING	24.0"	JREF-	1SSS487_Z09

(3-509-STANLEY CRAWFORD-48 TURKEY RUN - EJ7-1)

Top chord 2x4 SP #2 Dense
Bot chord 2x4 SP #2 Dense
Webs 2x4 SP #3

Dead loads are stated on projected horizontal area basis.

Provide (2) 16d common nails(0.162"x3.5"), toe nailed at Top chord.
Provide (2) 16d common nails(0.162"x3.5"), toe nailed at Bot chord.

110 mph wind, 9.96 ft mean hgt, ASCE 7-98, CLOSED bldg, not located within 4.50 ft from roof edge, CAT II, EXP B, wind TC DL=2.8 psf, wind BC DL=2.2 psf.

Deflection meets L/360 live and L/240 total load. Creep increase factor for dead load is 1.50.

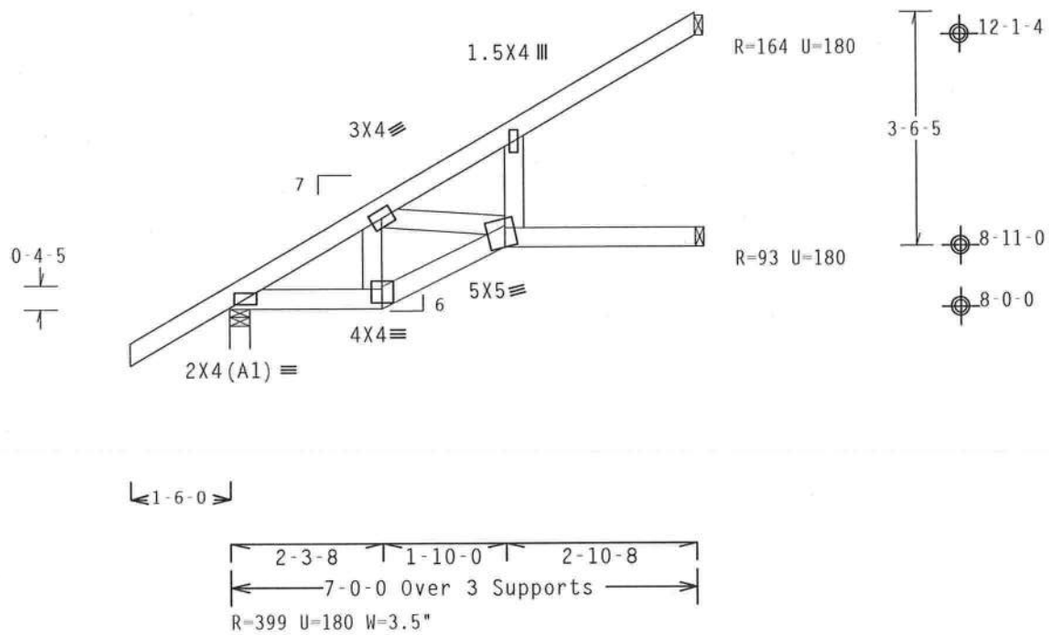

Design Crit: TPI-2002(STD)/FBC
Cq/RT=1.00(1.25)/10(0) 7.04.08 QTY:1 FL/-/4/-/-/R/-

PLT TYP. Wave

Scale =.375"/Ft.

ALPINE
Alpine Engineered Products, Inc.
1950 Marley Drive
Haines City, FL 33844
FL Certificate of Authorization # 567

WARNING TRUSSES REQUIRE EXTREME CARE IN FABRICATION, HANDLING, SHIPPING, INSTALLING AND BRACING. REFER TO BCSI 1-03 (BUILDING COMPONENT SAFETY INFORMATION), PUBLISHED BY TPI (TRUSS PLATE INSTITUTE, 583 D'ONOFRIO DR., SUITE 200, MADISON, WI 53719) AND WTCA (WOOD TRUSS COUNCIL OF AMERICA, 6300 ENTERPRISE LN, MADISON, WI 53719) FOR SAFETY PRACTICES PRIOR TO PERFORMING THESE FUNCTIONS. UNLESS OTHERWISE INDICATED, TOP CHORD SHALL HAVE PROPERLY ATTACHED STRUCTURAL PANELS AND BOTTOM CHORD SHALL HAVE A PROPERLY ATTACHED RIGID CEILING.

IMPORTANTFURNISH A COPY OF THIS DESIGN TO THE INSTALLATION CONTRACTOR. ALPINE ENGINEERED PRODUCTS, INC. SHALL NOT BE RESPONSIBLE FOR ANY DEVIATION FROM THIS DESIGN; ANY FAILURE TO BUILD THE TRUSS IN CONFORMANCE WITH TPI; OR FABRICATING, HANDLING, SHIPPING, INSTALLING & BRACING OF TRUSSES. DESIGN CONFORMS WITH APPLICABLE PROVISIONS OF NDS (NATIONAL DESIGN SPEC. BY AF&PA) AND TPI. ALPINE CONNECTOR PLATES ARE MADE OF 20/18/16GA (W,H/S/K) ASTM A653 GRADE 40/60 (W, K/H,S) GALV. STEEL. APPLY PLATES TO EACH FACE OF TRUSS AND, UNLESS OTHERWISE LOCATED ON THIS DESIGN, POSITION PER DRAWINGS 160A-Z. ANY INSPECTION OF PLATES FOLLOWED BY (1) SHALL BE PER ANNEX A3 OF TPI1-2002 SEC.3. A SEAL ON THIS DRAWING INDICATES ACCEPTANCE OF PROFESSIONAL ENGINEERING RESPONSIBILITY SOLELY FOR THE TRUSS COMPONENT DESIGN SHOWN. THE SUITABILITY AND USE OF THIS COMPONENT FOR ANY BUILDING IS THE RESPONSIBILITY OF THE BUILDING DESIGNER PER ANSI/TPI 1 SEC. 2.

ARTHUR R. FISHER
LICENSE
No. 59687
STATE OF FLORIDA
PROFESSIONAL ENGINEER

Dec 07 '05

TC LL	20.0 PSF	REF	R487-- 25429
TC DL	10.0 PSF	DATE	12/07/05
BC DL	10.0 PSF	DRW	HCUSR487 05341011
BC LL	0.0 PSF	HC-ENG	JB/AF *
TOT.LD.	40.0 PSF	SEQN-	17764
DUR.FAC.	1.25		
SPACING	24.0"	JREF-	1SSS487_Z09

(5-509-STANLEY CRAWFORD-48 TURKEY RUN EJ7-12)

Top chord 2x4 SP #2 Dense
Bot chord 2x6 SP #2 :B2 2x4 SP #2 Dense:

Dead loads are stated on projected horizontal area basis.

Provide (2) 16d common nails(0.162"x3.5"), toe nailed at Top chord.
Provide (2) 16d common nails(0.162"x3.5"), toe nailed at Bot chord.

110 mph wind, 9.96 ft mean hgt, ASCE 7-98, CLOSED bldg, not located within 4.50 ft from roof edge, CAT II, EXP B, wind TC DL=2.8 psf, wind BC DL=2.2 psf.

Deflection meets L/360 live and L/240 total load. Creep increase factor for dead load is 1.50.

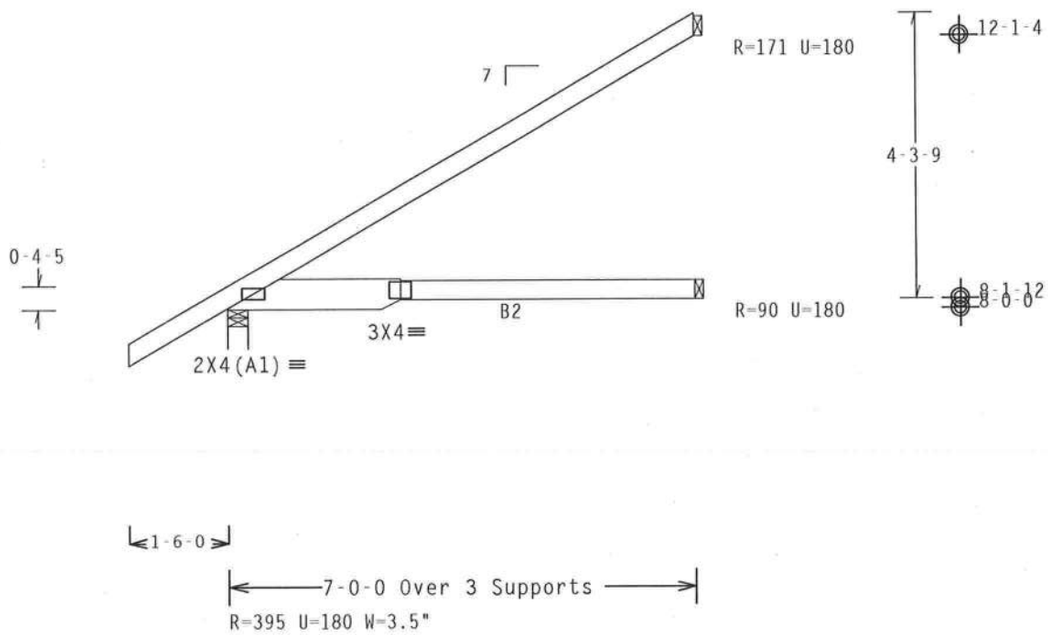

Design Crit: TPI-2002(STD)/FBC
Cq/RT=1.00(1.25)/10(0) 7.04.08 TY:1 FL/-/4/-/-/R/-

PLT TYP. Wave

Scale =.375"/Ft.

ALPINE
Alpine Engineered Products, Inc.
1950 Marley Drive
Haines City, FL 33844
FL Certificate of Authorization # 567

WARNING TRUSSES REQUIRE EXTREME CARE IN FABRICATION, HANDLING, SHIPPING, INSTALLING AND BRACING. REFER TO BCSI 1-03 (BUILDING COMPONENT SAFETY INFORMATION), PUBLISHED BY TPI (TRUSS PLATE INSTITUTE, 583 D'ONOFRIO DR., SUITE 200, MADISON, WI 53719) AND WTCA (WOOD TRUSS COUNCIL OF AMERICA, 6300 ENTERPRISE LN, MADISON, WI 53719) FOR SAFETY PRACTICES PRIOR TO PERFORMING THESE FUNCTIONS. UNLESS OTHERWISE INDICATED, TOP CHORD SHALL HAVE PROPERLY ATTACHED STRUCTURAL PANELS AND BOTTOM CHORD SHALL HAVE A PROPERLY ATTACHED RIGID CEILING.

IMPORTANTFURNISH A COPY OF THIS DESIGN TO THE INSTALLATION CONTRACTOR. ALPINE ENGINEERED PRODUCTS, INC. SHALL NOT BE RESPONSIBLE FOR ANY DEVIATION FROM THIS DESIGN; ANY FAILURE TO BUILD THE TRUSS IN CONFORMANCE WITH TPI; OR FABRICATING, HANDLING, SHIPPING, INSTALLING & BRACING OF TRUSSES. DESIGN CONFORMS WITH APPLICABLE PROVISIONS OF NDS (NATIONAL DESIGN SPEC. BY AF&PA) AND TPI. ALPINE CONNECTOR PLATES ARE MADE OF 20/18/16GA (W,H/S/X) ASTM A653 GRADE 40/60 (W, K/H,S) GALV. STEEL. APPLY PLATES TO EACH FACE OF TRUSS AND, UNLESS OTHERWISE LOCATED ON THIS DESIGN, POSITION PER DRAWINGS 160A-Z. ANY INSPECTION OF PLATES FOLLOWED BY (1) SHALL BE PER ANNEX A3 OF TPI1-2002 SEC.3. A SEAL ON THIS DRAWING INDICATES ACCEPTANCE OF PROFESSIONAL ENGINEERING RESPONSIBILITY SOLELY FOR THE TRUSS COMPONENT DESIGN SHOWN. THE SUITABILITY AND USE OF THIS COMPONENT FOR ANY BUILDING IS THE RESPONSIBILITY OF THE BUILDING DESIGNER PER ANSI/TPI 1 SEC. 2.

ARTHUR R. FISHER
LICENSE
No. 59687
STATE OF FLORIDA
PROFESSIONAL ENGINEER

Dec 07 '05

TC LL	20.0 PSF	REF	R487-- 25430
TC DL	10.0 PSF	DATE	12/07/05
BC DL	10.0 PSF	DRW	HCUSR487 05341050
BC LL	0.0 PSF	HC-ENG	JB/AF
TOT.LD.	40.0 PSF	SEQN-	17766
DUR.FAC.	1.25		
SPACING	24.0"	JREF-	1SSS487_Z09

(5-509-STANLEY CRAWFORD-48 TURKEY RUN M)

Top chord 2x4 SP #2 Dense
Bot chord 2x4 SP #2 Dense
Webs 2x4 SP #3

Dead loads are stated on projected horizontal area basis.

Deflection meets L/360 live and L/240 total load. Creep increase factor for dead load is 1.50.

++ ANCHORAGE REQ'D TO PREVENT TRUSS FROM SLIPPING OFF BEARING.

110 mph wind, 9.38 ft mean hgt, ASCE 7-98, CLOSED bldg, not located within 4.50 ft from roof edge, CAT II, EXP B, wind TC DL=2.8 psf, wind BC DL=2.2 psf.

Right end vertical not exposed to wind pressure.

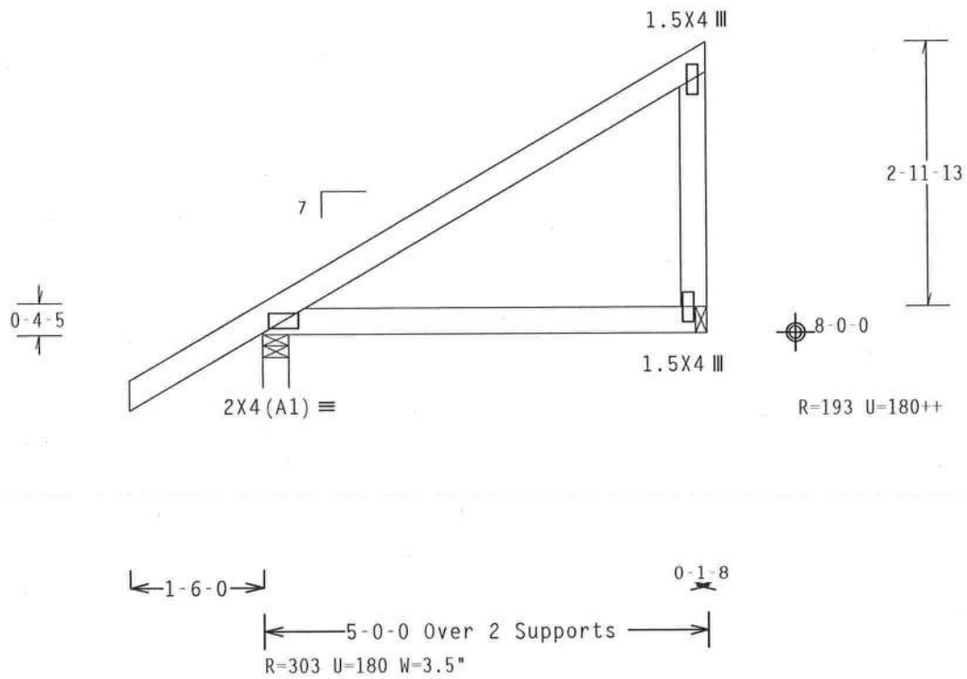

Design Crit: TPI-2002(STD)/FBC
Cq/RT=1.00(1.25)/10(0) 7.04.08 TY:5 FL/-/4/-/-/R/-

PLT TYP. Wave

Scale =.5"/Ft.

ALPINE
Alpine Engineered Products, Inc.
1950 Marley Drive
Haines City, FL 33844
FL Certificate of Authorization # 567

WARNING TRUSSES REQUIRE EXTREME CARE IN FABRICATION, HANDLING, SHIPPING, INSTALLING AND BRACING. REFER TO BCSI 1-03 (BUILDING COMPONENT SAFETY INFORMATION), PUBLISHED BY TPI (TRUSS PLATE INSTITUTE, 583 D'ONOFRIO DR., SUITE 200, MADISON, WI 53719) AND WTCA (WOOD TRUSS COUNCIL OF AMERICA, 6300 ENTERPRISE LN, MADISON, WI 53719) FOR SAFETY PRACTICES PRIOR TO PERFORMING THESE FUNCTIONS. UNLESS OTHERWISE INDICATED, TOP CHORD SHALL HAVE PROPERLY ATTACHED STRUCTURAL PANELS AND BOTTOM CHORD SHALL HAVE A PROPERLY ATTACHED RIGID CEILING.

IMPORTANTFURNISH A COPY OF THIS DESIGN TO THE INSTALLATION CONTRACTOR. ALPINE ENGINEERED PRODUCTS, INC. SHALL NOT BE RESPONSIBLE FOR ANY DEVIATION FROM THIS DESIGN; ANY FAILURE TO BUILD THE TRUSS IN CONFORMANCE WITH TPI; OR FABRICATING, HANDLING, SHIPPING, INSTALLING & BRACING OF TRUSSES. DESIGN CONFORMS WITH APPLICABLE PROVISIONS OF NDS (NATIONAL DESIGN SPEC. BY AF&PA) AND TPI. ALPINE CONNECTOR PLATES ARE MADE OF 20/18/16GA (W,H/S/K) ASTM A653 GRADE 40/60 (W, K/H,S) GALV. STEEL. APPLY PLATES TO EACH FACE OF TRUSS AND, UNLESS OTHERWISE LOCATED ON THIS DESIGN, POSITION PER DRAWINGS 160A-Z. ANY INSPECTION OF PLATES FOLLOWED BY (1) SHALL BE PER ANNEX A3 OF TPI1-2002 SEC.3. A SEAL ON THIS DRAWING INDICATES ACCEPTANCE OF PROFESSIONAL ENGINEERING RESPONSIBILITY SOLELY FOR THE TRUSS COMPONENT DESIGN SHOWN. THE SUITABILITY AND USE OF THIS COMPONENT FOR ANY BUILDING IS THE RESPONSIBILITY OF THE BUILDING DESIGNER PER ANSI/TPI 1 SEC. 2.

ARTHUR R. FISHER LICENSE No.59687 STATE OF FLORIDA PROFESSIONAL ENGINEER

Dec 07 '05

TC LL	20.0 PSF	REF	R487-- 25431
TC DL	10.0 PSF	DATE	12/07/05
BC DL	10.0 PSF	DRW	HCUSR487 05341012
BC LL	0.0 PSF	HC-ENG	JB/AF
TOT.LD.	40.0 PSF	SEQN-	17771
DUR.FAC.	1.25		
SPACING	24.0"	JREF-	1SSS487_Z09

(5-509-STANLEY CRAWFORD-48 TURKEY RUN M1)

Top chord 2x4 SP #2 Dense
Bot chord 2x4 SP #2 Dense
Webs 2x4 SP #3

Dead loads are stated on projected horizontal area basis.

H = recommended connection based on manufacturer tested capacities and calculations. Conditions may exist that require different connections than indicated. Refer to manufacturer publication for additional information.

++ ANCHORAGE REQ'D TO PREVENT TRUSS FROM SLIPPING OFF BEARING.

110 mph wind, 9.82 ft mean hgt, ASCE 7-98, CLOSED bldg, not located within 4.50 ft from roof edge, CAT II, EXP B, wind TC DL=2.8 psf, wind BC DL=2.2 psf.

Right end vertical not exposed to wind pressure.

Deflection meets L/360 live and L/240 total load. Creep increase factor for dead load is 1.50.

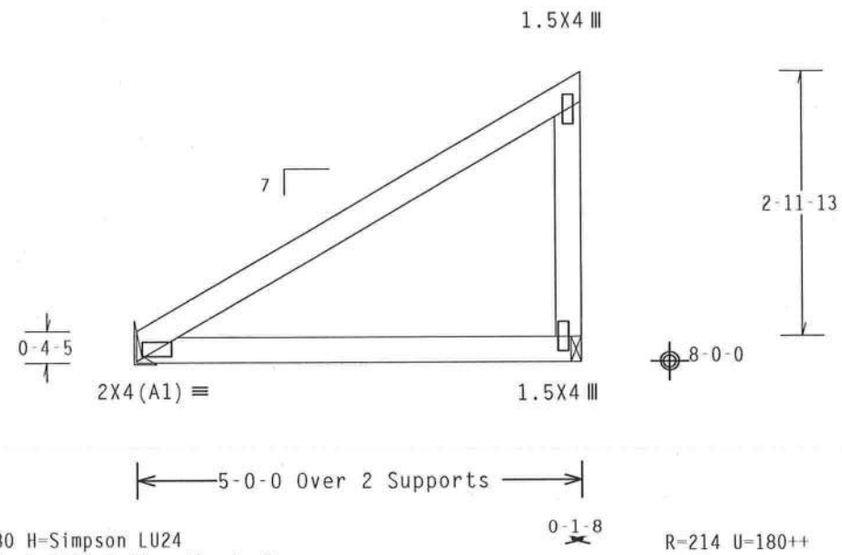

R=186 U=180 H=Simpson LU24
w/ (2) 10d, 0.148"x1.5" nails in Truss
w/ (4) 10d Common, 0.148"x3.0" nails in Girder
Girder is (1)2X4 min. So.Pine

Design Crit: TPI-2002(STD)/FBC
PLT TYP. Wave Cq/RT=1.00(1.25)/10(0) 7.04.0 QTY:1 FL/-/4/-/-/R/- Scale =.5"/Ft.

ALPINE
Alpine Engineered Products, Inc.
1950 Marley Drive
Haines City, FL 33844
FL Certificate of Authorization # 567

WARNING TRUSSES REQUIRE EXTREME CARE IN FABRICATION, HANDLING, SHIPPING, INSTALLING AND BRACING. REFER TO BCSI 1-03 (BUILDING COMPONENT SAFETY INFORMATION), PUBLISHED BY TPI (TRUSS PLATE INSTITUTE, 583 D'ONOFRIO DR., SUITE 200, MADISON, WI 53719) AND WTCA (WOOD TRUSS COUNCIL OF AMERICA, 6300 ENTERPRISE LN, MADISON, WI 53719) FOR SAFETY PRACTICES PRIOR TO PERFORMING THESE FUNCTIONS. UNLESS OTHERWISE INDICATED, TOP CHORD SHALL HAVE PROPERLY ATTACHED STRUCTURAL PANELS AND BOTTOM CHORD SHALL HAVE A PROPERLY ATTACHED RIGID CEILING.

IMPORTANTFURNISH A COPY OF THIS DESIGN TO THE INSTALLATION CONTRACTOR. ALPINE ENGINEERED PRODUCTS, INC. SHALL NOT BE RESPONSIBLE FOR ANY DEVIATION FROM THIS DESIGN; ANY FAILURE TO BUILD THE TRUSS IN CONFORMANCE WITH TPI; OR FABRICATING, HANDLING, SHIPPING, INSTALLING & BRACING OF TRUSSES. DESIGN CONFORMS WITH APPLICABLE PROVISIONS OF NDS (NATIONAL DESIGN SPEC, BY AF&PA) AND TPI. ALPINE CONNECTOR PLATES ARE MADE OF 20/18/16GA (W,H/S/K) ASTM A653 GRADE 40/60 (W, K/H,S) GALV. STEEL. APPLY PLATES TO EACH FACE OF TRUSS AND, UNLESS OTHERWISE LOCATED ON THIS DESIGN, POSITION PER DRAWINGS 160A-Z. ANY INSPECTION OF PLATES FOLLOWED BY (1) SHALL BE PER ANNEX A3 OF TPI1-2002 SEC.3. A SEAL ON THIS DRAWING INDICATES ACCEPTANCE OF PROFESSIONAL ENGINEERING RESPONSIBILITY SOLELY FOR THE TRUSS COMPONENT DESIGN SHOWN. THE SUITABILITY AND USE OF THIS COMPONENT FOR ANY BUILDING IS THE RESPONSIBILITY OF THE BUILDING DESIGNER PER ANSI/TPI 1 SEC. 2.

ARTHUR R. FISHER LICENSE No.59681 STATE OF FLORIDA PROFESSIONAL ENGINEER
Dec 07 '05

TC LL	20.0 PSF	REF	R487-- 25432
TC DL	10.0 PSF	DATE	12/07/05
BC DL	10.0 PSF	DRW	HCUSR487 05341013
BC LL	0.0 PSF	HC-ENG	JB/AF
TOT.LD.	40.0 PSF	SEQN-	17775
DUR.FAC.	1.25		
SPACING	24.0"	JREF-	1SSS487_Z09

(5-509-STANLEY CRAWFORD-48 TURKEY RUN M2)

Top chord 2x4 SP #2 Dense
Bot chord 2x4 SP #2 Dense
Webs 2x4 SP #3

Dead loads are stated on projected horizontal area basis.

H = recommended connection based on manufacturer tested capacities and calculations. Conditions may exist that require different connections than indicated. Refer to manufacturer publication for additional information.

++ ANCHORAGE REQ'D TO PREVENT TRUSS FROM SLIPPING OFF BEARING.

110 mph wind, 10.40 ft mean hgt, ASCE 7-98, CLOSED bldg, not located within 4.50 ft from roof edge, CAT II, EXP B, wind TC DL=2.8 psf, wind BC DL=2.2 psf.

Right end vertical not exposed to wind pressure.

Deflection meets L/360 live and L/240 total load. Creep increase factor for dead load is 1.50.

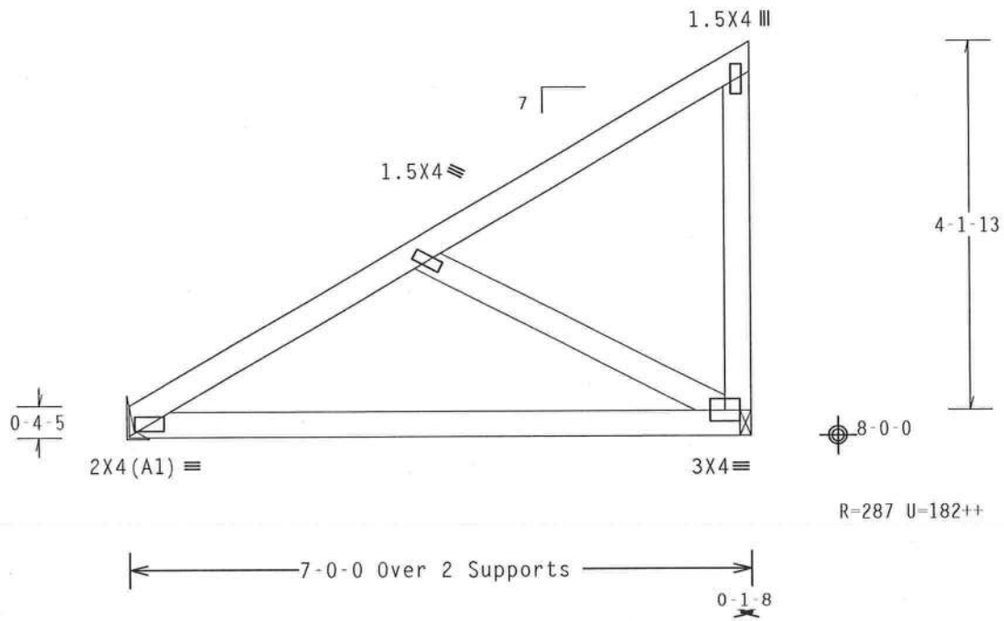

R=273 U=180 H=Simpson LU24
w/ (2) 10d, 0.148"x1.5" nails in Truss
w/ (4) 10d Common, 0.148"x3.0" nails in Girder
Girder is (1)2X4 min. So.Pine

Design Crit: TPI-2002(STD)/FBC

PLT TYP. Wave | Cq/RT=1.00(1.25)/10(0) 7.04.08 | QTY:3 | FL/-/4/-/-/R/- | Scale =.5"/Ft.

ALPINE
Alpine Engineered Products, Inc.
1950 Marley Drive
Haines City, FL 33844
FL Certificate of Authorization # 567

WARNING TRUSSES REQUIRE EXTREME CARE IN FABRICATION, HANDLING, SHIPPING, INSTALLING AND BRACING. REFER TO BCSI 1-03 (BUILDING COMPONENT SAFETY INFORMATION), PUBLISHED BY TPI (TRUSS PLATE INSTITUTE, 583 D'ONOFRIO DR., SUITE 200, MADISON, WI 53719) AND WTCA (WOOD TRUSS COUNCIL OF AMERICA, 6300 ENTERPRISE LN, MADISON, WI 53719) FOR SAFETY PRACTICES PRIOR TO PERFORMING THESE FUNCTIONS. UNLESS OTHERWISE INDICATED, TOP CHORD SHALL HAVE PROPERLY ATTACHED STRUCTURAL PANELS AND BOTTOM CHORD SHALL HAVE A PROPERLY ATTACHED RIGID CEILING.

IMPORTANTFURNISH A COPY OF THIS DESIGN TO THE INSTALLATION CONTRACTOR. ALPINE ENGINEERED PRODUCTS, INC. SHALL NOT BE RESPONSIBLE FOR ANY DEVIATION FROM THIS DESIGN; ANY FAILURE TO BUILD THE TRUSS IN CONFORMANCE WITH TPI; OR FABRICATING, HANDLING, SHIPPING, INSTALLING & BRACING OF TRUSSES. DESIGN CONFORMS WITH APPLICABLE PROVISIONS OF NDS (NATIONAL DESIGN SPEC, BY AF&PA) AND TPI. ALPINE CONNECTOR PLATES ARE MADE OF 20/18/16GA (W,H/S/K) ASTM A653 GRADE 40/60 (W, K/H,S) GALV. STEEL. APPLY PLATES TO EACH FACE OF TRUSS AND, UNLESS OTHERWISE LOCATED ON THIS DESIGN, POSITION PER DRAWINGS 160A-Z. ANY INSPECTION OF PLATES FOLLOWED BY (I) SHALL BE PER ANNEX A3 OF TPI1-2002 SEC.3. A SEAL ON THIS DRAWING INDICATES ACCEPTANCE OF PROFESSIONAL ENGINEERING RESPONSIBILITY SOLELY FOR THE TRUSS COMPONENT DESIGN SHOWN. THE SUITABILITY AND USE OF THIS COMPONENT FOR ANY BUILDING IS THE RESPONSIBILITY OF THE BUILDING DESIGNER PER ANSI/TPI 1 SEC. 2.

ARTHUR R. FISHER LICENSE No. 59687 STATE OF FLORIDA PROFESSIONAL ENGINEER

Dec 07 05

TC LL	20.0 PSF	REF	R487-- 25433
TC DL	10.0 PSF	DATE	12/07/05
BC DL	10.0 PSF	DRW	HCUSR487 05341014
BC LL	0.0 PSF	HC-ENG	JB/AF
TOT.LD.	40.0 PSF	SEQN-	17774
DUR.FAC.	1.25		
SPACING	24.0"	JREF-	1SSS487_Z09

(5-509-STANLEY CRAWFORD-48 TURKEY RUN - MGE)

Top chord 2x4 SP #2 Dense
Bot chord 2x4 SP #2 Dense
Webs 2x4 SP #3

SPECIAL LOADS
------(LUMBER DUR.FAC.=1.25 / PLATE DUR.FAC.=1.25)

TC - From	82 PLF at	-1.50 to	82 PLF at	12.44
BC - From	4 PLF at	-1.50 to	4 PLF at	0.00
BC - From	20 PLF at	0.00 to	20 PLF at	9.29
BC - From	4 PLF at	9.29 to	4 PLF at	12.44

Deflection meets L/360 live and L/240 total load. Creep increase factor for dead load is 1.50.

(A) (1) 2X4X 8-0-0 SP#2 DENSE SCAB; ATTACH TO ONE FACE OF TRUSS LOCATED AS SHOWN WITH 10d BOX(0.128"X3.0") NAILS @ 3"OC WITHOUT SPLITTING LUMBER.

110 mph wind, 8.76 ft mean hgt, ASCE 7-98, CLOSED bldg, Located anywhere in roof, CAT II, EXP B, wind TC DL=2.8 psf, wind BC DL=2.2 psf.

Right end vertical not exposed to wind pressure.

Dead loads are stated on projected horizontal area basis.

See DWGS A11015EC1103 & GBLLETIN0405 for more requirements.

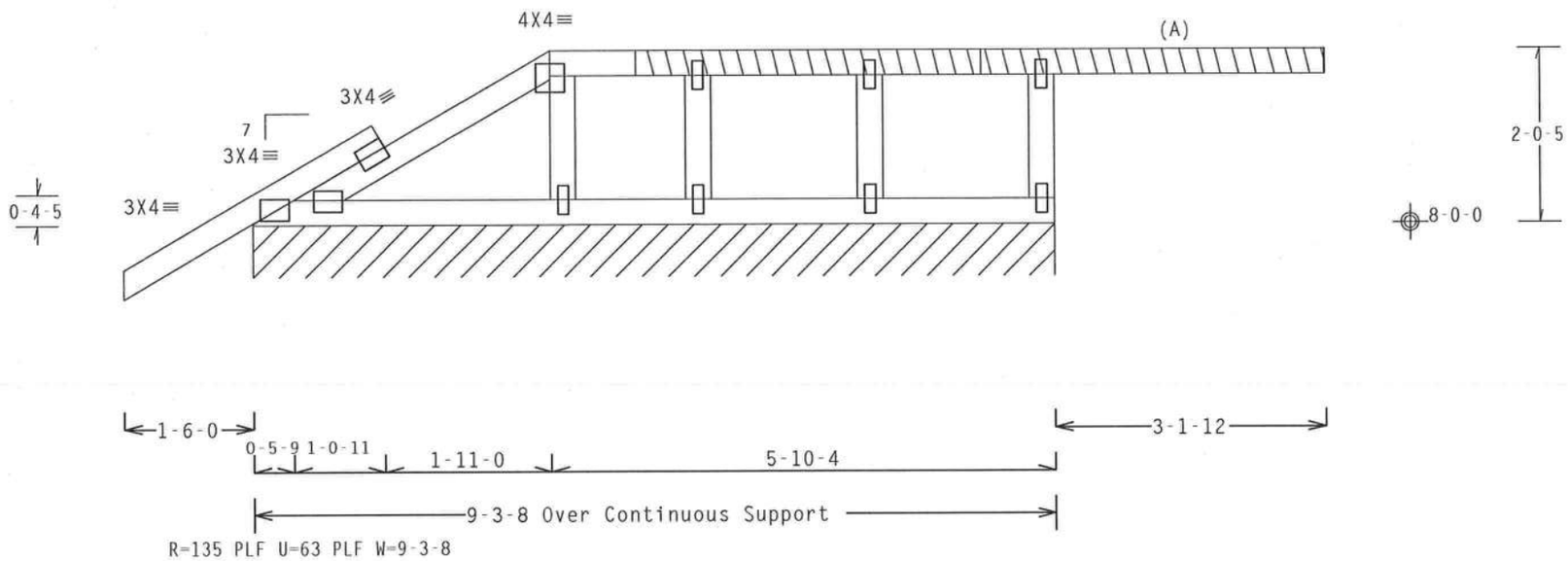

Note: All Plates Are 1.5X4 Except As Shown.

Design Crit: TPI-2002(STD)/FBC

PLT TYP. Wave Cq/RT=1.00(1.25)/10(0) 7.04.08 TY:1 FL/-/4/-/-/R/- Scale =.5"/Ft.

ALPINE
Alpine Engineered Products, Inc.
1950 Marley Drive
Haines City, FL 33844
FL Certificate of Authorization # 567

WARNING TRUSSES REQUIRE EXTREME CARE IN FABRICATION, HANDLING, SHIPPING, INSTALLING AND BRACING. REFER TO BCSI 1-03 (BUILDING COMPONENT SAFETY INFORMATION), PUBLISHED BY TPI (TRUSS PLATE INSTITUTE, 583 D'ONOFRIO DR., SUITE 200, MADISON, WI 53719) AND WTCA (WOOD TRUSS COUNCIL OF AMERICA, 6300 ENTERPRISE LN, MADISON, WI 53719) FOR SAFETY PRACTICES PRIOR TO PERFORMING THESE FUNCTIONS. UNLESS OTHERWISE INDICATED, TOP CHORD SHALL HAVE PROPERLY ATTACHED STRUCTURAL PANELS AND BOTTOM CHORD SHALL HAVE A PROPERLY ATTACHED RIGID CEILING.

IMPORTANTFURNISH A COPY OF THIS DESIGN TO THE INSTALLATION CONTRACTOR. ALPINE ENGINEERED PRODUCTS, INC. SHALL NOT BE RESPONSIBLE FOR ANY DEVIATION FROM THIS DESIGN; ANY FAILURE TO BUILD THE TRUSS IN CONFORMANCE WITH TPI; OR FABRICATING, HANDLING, SHIPPING, INSTALLING & BRACING OF TRUSSES. DESIGN CONFORMS WITH APPLICABLE PROVISIONS OF NDS (NATIONAL DESIGN SPEC. BY AF&PA) AND TPI. ALPINE CONNECTOR PLATES ARE MADE OF 20/18/16GA (W,H/S/K) ASTM A653 GRADE 40/60 (W, K/H,S) GALV. STEEL. APPLY PLATES TO EACH FACE OF TRUSS AND, UNLESS OTHERWISE LOCATED ON THIS DESIGN, POSITION PER DRAWINGS 160A-Z. ANY INSPECTION OF PLATES FOLLOWED BY (1) SHALL BE PER ANNEX A3 OF TPI1-2002 SEC.3. A SEAL ON THIS DRAWING INDICATES ACCEPTANCE OF PROFESSIONAL ENGINEERING RESPONSIBILITY SOLELY FOR THE TRUSS COMPONENT DESIGN SHOWN. THE SUITABILITY AND USE OF THIS COMPONENT FOR ANY BUILDING IS THE RESPONSIBILITY OF THE BUILDING DESIGNER PER ANSI/TPI 1 SEC. 2.

ARTHUR R. FISHER LICENSE No. 59687 STATE OF FLORIDA PROFESSIONAL ENGINEER
Dec 07 '05

TC LL	20.0 PSF	REF	R487-- 25434
TC DL	10.0 PSF	DATE	12/07/05
BC DL	10.0 PSF	DRW	HCUSR487 05341051
BC LL	0.0 PSF	HC-ENG	JB/AF
TOT.LD.	40.0 PSF	SEQN-	17767 REV
DUR.FAC.	1.25		
SPACING	24.0"	JREF-	1SSS487_Z09

(5-509-STANLEY CRAWFORD-48 TURKEY RUN - H19AF)

Top chord 2x4 SP #2 Dense
Bot chord 2x4 SP #2 Dense
Webs 2x4 SP #3

Dead loads are stated on projected horizontal area basis.

Refer to DWG PIGBACKA1103 or PIGBACKB0204 for piggyback details.
PORTION OF TRUSS UNDER PIGGYBACK IS TO BE BRACED @ 24" OC,
UNLESS OTHERWISE SPECIFIED.

110 mph wind, 18.86 ft mean hgt, ASCE 7-98, CLOSED bldg, not located within 4.50 ft from roof edge, CAT II, EXP B, wind TC DL=2.8 psf, wind BC DL=2.2 psf.

Deflection meets L/360 live and L/240 total load. Creep increase factor for dead load is 1.50.

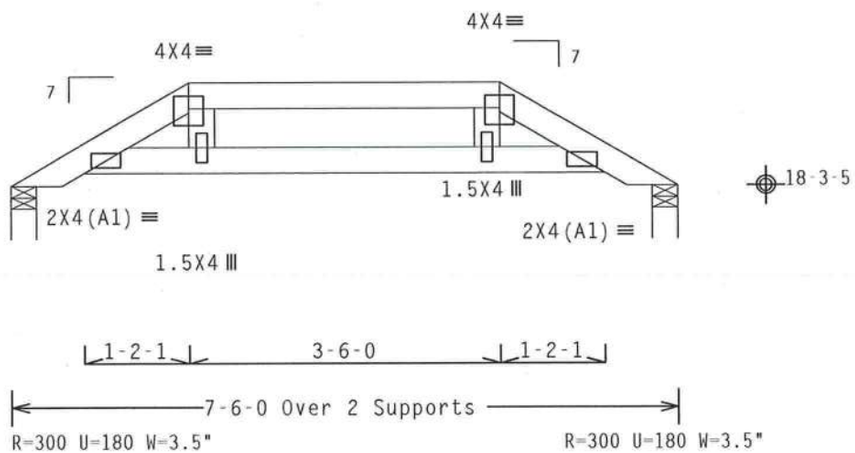

Design Crit: TPI-2002(STD)/FBC
PLT TYP. Wave Cq/RT=1.00(1.25)/10(0) 7.04.08 QTY:1 FL/-/4/-/-/R/- Scale =.5"/Ft.

ALPINE
Alpine Engineered Products, Inc.
1950 Marley Drive
Haines City, FL 33844
FL Certificate of Authorization # 567

WARNING TRUSSES REQUIRE EXTREME CARE IN FABRICATION, HANDLING, SHIPPING, INSTALLING AND BRACING. REFER TO BCSI 1-03 (BUILDING COMPONENT SAFETY INFORMATION), PUBLISHED BY TPI (TRUSS PLATE INSTITUTE, 583 D'ONOFRIO DR., SUITE 200, MADISON, WI 53719) AND WTCA (WOOD TRUSS COUNCIL OF AMERICA, 6300 ENTERPRISE LN, MADISON, WI 53719) FOR SAFETY PRACTICES PRIOR TO PERFORMING THESE FUNCTIONS. UNLESS OTHERWISE INDICATED, TOP CHORD SHALL HAVE PROPERLY ATTACHED STRUCTURAL PANELS AND BOTTOM CHORD SHALL HAVE A PROPERLY ATTACHED RIGID CEILING.

IMPORTANT FURNISH A COPY OF THIS DESIGN TO THE INSTALLATION CONTRACTOR. ALPINE ENGINEERED PRODUCTS, INC. SHALL NOT BE RESPONSIBLE FOR ANY DEVIATION FROM THIS DESIGN; ANY FAILURE TO BUILD THE TRUSS IN CONFORMANCE WITH TPI; OR FABRICATING, HANDLING, SHIPPING, INSTALLING & BRACING OF TRUSSES. DESIGN CONFORMS WITH APPLICABLE PROVISIONS OF NDS (NATIONAL DESIGN SPEC. BY AFA&PA) AND TPI. ALPINE CONNECTOR PLATES ARE MADE OF 20/18/16GA (W,H/S/K) ASTM A653 GRADE 40/60 (W, K/H,S) GALV. STEEL. APPLY PLATES TO EACH FACE OF TRUSS AND, UNLESS OTHERWISE LOCATED ON THIS DESIGN, POSITION PER DRAWINGS 160A-Z. ANY INSPECTION OF PLATES FOLLOWED BY (1) SHALL BE PER ANNEX A3 OF TPI1-2002 SEC.3. A SEAL ON THIS DRAWING INDICATES ACCEPTANCE OF PROFESSIONAL ENGINEERING RESPONSIBILITY SOLELY FOR THE TRUSS COMPONENT DESIGN SHOWN. THE SUITABILITY AND USE OF THIS COMPONENT FOR ANY BUILDING IS THE RESPONSIBILITY OF THE BUILDING DESIGNER PER ANSI/TPI 1 SEC. 2.

ARTHUR R. FISHER LICENSE No. 59687 STATE OF FLORIDA PROFESSIONAL ENGINEER
Dec 07 '05

TC LL	20.0 PSF	REF	R487-- 25435
TC DL	10.0 PSF	DATE	12/07/05
BC DL	10.0 PSF	DRW	HCUSR487 05341052
BC LL	0.0 PSF	HC-ENG	JB/AF
TOT.LD.	40.0 PSF	SEQN-	17782
DUR.FAC.	1.25		
SPACING	24.0"	JREF-	1SSS487_Z09

(5-509-STANLEY CRAWFORD-48 TURKEY RUN - AP)

Top chord 2x4 SP #2 Dense
Bot chord 2x4 SP #2 Dense
Webs 2x4 SP #3

Dead loads are stated on projected horizontal area basis.

Refer to DWG PIGBACKA1103 or PIGBACKB0204 for piggyback details.
PORTION OF TRUSS UNDER PIGGYBACK IS TO BE BRACED @ 24" OC,
UNLESS OTHERWISE SPECIFIED.

110 mph wind, 19.37 ft mean hgt, ASCE 7-98, CLOSED bldg, not located within 4.50 ft from roof edge, CAT II, EXP B, wind TC DL=2.8 psf, wind BC DL=2.2 psf.

Deflection meets L/360 live and L/240 total load. Creep increase factor for dead load is 1.50.

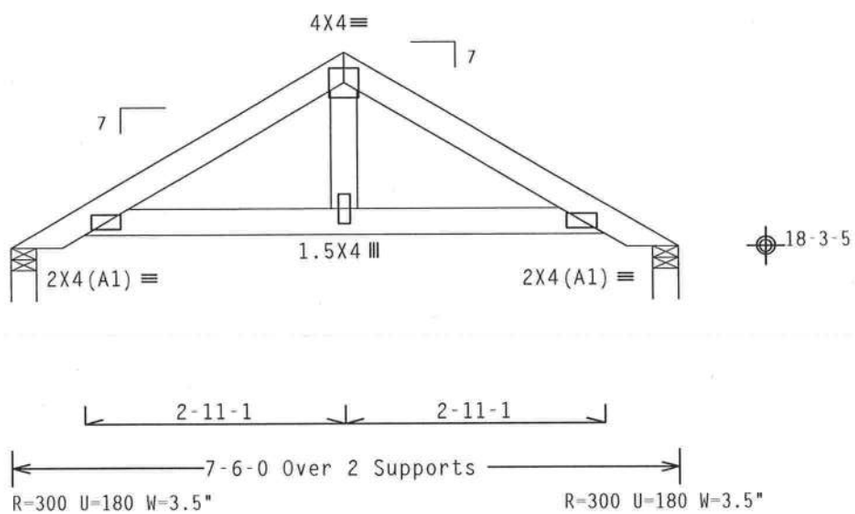

Design Crit: TPI-2002(STD)/FBC
PLT TYP. Wave Cq/RT=1.00(1.25)/10(0) 7.04.08 QTY:5 FL/-/4/-/-/R/- Scale =.5"/Ft.

ALPINE
Alpine Engineered Products, Inc.
1950 Marley Drive
Haines City, FL 33844
FL Certificate of Authorization # 567

WARNING TRUSSES REQUIRE EXTREME CARE IN FABRICATION, HANDLING, SHIPPING, INSTALLING AND BRACING. REFER TO BCSI 1-03 (BUILDING COMPONENT SAFETY INFORMATION), PUBLISHED BY TPI (TRUSS PLATE INSTITUTE, 583 D'ONOFRIO DR., SUITE 200, MADISON, WI 53719) AND WTCA (WOOD TRUSS COUNCIL OF AMERICA, 6300 ENTERPRISE LN, MADISON, WI 53719) FOR SAFETY PRACTICES PRIOR TO PERFORMING THESE FUNCTIONS. UNLESS OTHERWISE INDICATED, TOP CHORD SHALL HAVE PROPERLY ATTACHED STRUCTURAL PANELS AND BOTTOM CHORD SHALL HAVE A PROPERLY ATTACHED RIGID CEILING.

IMPORTANT FURNISH A COPY OF THIS DESIGN TO THE INSTALLATION CONTRACTOR. ALPINE ENGINEERED PRODUCTS, INC. SHALL NOT BE RESPONSIBLE FOR ANY DEVIATION FROM THIS DESIGN; ANY FAILURE TO BUILD THE TRUSS IN CONFORMANCE WITH TPI; OR FABRICATING, HANDLING, SHIPPING, INSTALLING & BRACING OF TRUSSES. DESIGN CONFORMS WITH APPLICABLE PROVISIONS OF NDS (NATIONAL DESIGN SPEC, BY AF&PA) AND TPI. ALPINE CONNECTOR PLATES ARE MADE OF 20/18/16GA (W,H/S/K) ASTM A653 GRADE 40/60 (W, K/H,S) GALV. STEEL. APPLY PLATES TO EACH FACE OF TRUSS AND, UNLESS OTHERWISE LOCATED ON THIS DESIGN, POSITION PER DRAWINGS 160A-Z. ANY INSPECTION OF PLATES FOLLOWED BY (1) SHALL BE PER ANNEX A3 OF TPI1-2002 SEC.3. A SEAL ON THIS DRAWING INDICATES ACCEPTANCE OF PROFESSIONAL ENGINEERING RESPONSIBILITY SOLELY FOR THE TRUSS COMPONENT DESIGN SHOWN. THE SUITABILITY AND USE OF THIS COMPONENT FOR ANY BUILDING IS THE RESPONSIBILITY OF THE BUILDING DESIGNER PER ANSI/TPI 1 SEC. 2.

ARTHUR R. FISHER LICENSE No. 59687 STATE OF FLORIDA PROFESSIONAL ENGINEER
Dec 7 '05

TC LL	20.0 PSF	REF	R487-- 25436
TC DL	10.0 PSF	DATE	12/07/05
BC DL	10.0 PSF	DRW	HCUSR487 05341053
BC LL	0.0 PSF	HC-ENG	JB/AF
TOT.LD.	40.0 PSF	SEQN-	17783
DUR.FAC.	1.25		
SPACING	24.0"	JREF-	1SSS487_Z09

(5-509-STANLEY CRAWFORD-48 TURKEY RUN - APH)

Top chord 2x4 SP #2 Dense
Bot chord 2x4 SP #2 Dense
Webs 2x4 SP #3

Dead loads are stated on projected horizontal area basis.

Refer to DWG PIGBACKA1103 or PIGBACKB0204 for piggyback details.
PORTION OF TRUSS UNDER PIGGYBACK IS TO BE BRACED @ 24" OC,
UNLESS OTHERWISE SPECIFIED.

110 mph wind, 19.04 ft mean hgt, ASCE 7-98, CLOSED bldg, not located within 4.50 ft from roof edge, CAT II, EXP B, wind TC DL=2.8 psf, wind BC DL=2.2 psf.

Deflection meets L/360 live and L/240 total load. Creep increase factor for dead load is 1.50.

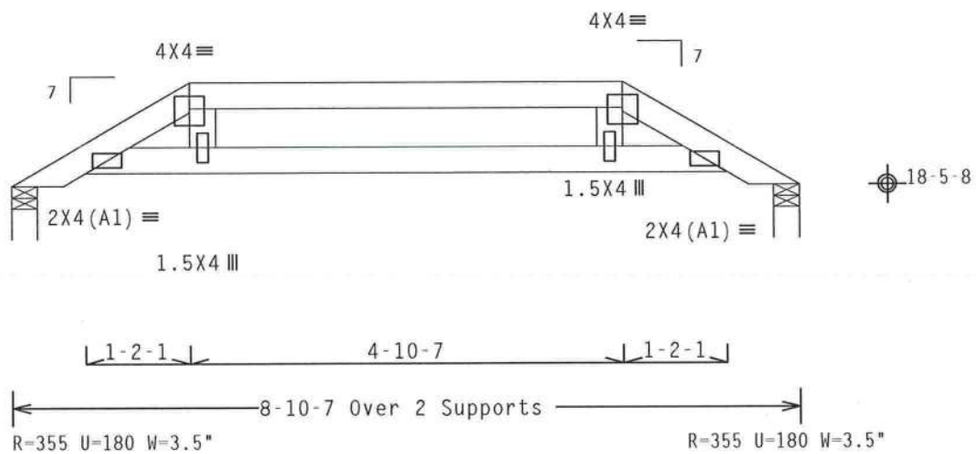

Design Crit: TPI-2002(STD)/FBC
PLT TYP. Wave Cq/RT=1.00(1.25)/10(0) 7.04.0 TY:1 FL/-/4/-/-/R/- Scale =.5"/Ft.

ALPINE
Alpine Engineered Products, Inc.
1950 Marley Drive
Haines City, FL 33844
FL Certificate of Authorization # 567

WARNING TRUSSES REQUIRE EXTREME CARE IN FABRICATION, HANDLING, SHIPPING, INSTALLING AND BRACING. REFER TO BCSI 1-03 (BUILDING COMPONENT SAFETY INFORMATION), PUBLISHED BY TPI (TRUSS PLATE INSTITUTE, 583 D'ONOFRIO DR., SUITE 200, MADISON, WI 53719) AND WTCA (WOOD TRUSS COUNCIL OF AMERICA, 6300 ENTERPRISE LN, MADISON, WI 53719) FOR SAFETY PRACTICES PRIOR TO PERFORMING THESE FUNCTIONS. UNLESS OTHERWISE INDICATED, TOP CHORD SHALL HAVE PROPERLY ATTACHED STRUCTURAL PANELS AND BOTTOM CHORD SHALL HAVE A PROPERLY ATTACHED RIGID CEILING.

IMPORTANTFURNISH A COPY OF THIS DESIGN TO THE INSTALLATION CONTRACTOR. ALPINE ENGINEERED PRODUCTS, INC. SHALL NOT BE RESPONSIBLE FOR ANY DEVIATION FROM THIS DESIGN; ANY FAILURE TO BUILD THE TRUSS IN CONFORMANCE WITH TPI; OR FABRICATING, HANDLING, SHIPPING, INSTALLING & BRACING OF TRUSSES. DESIGN CONFORMS WITH APPLICABLE PROVISIONS OF NDS (NATIONAL DESIGN SPEC. BY AF&PA) AND TPI. ALPINE CONNECTOR PLATES ARE MADE OF 20/18/16GA (W,H/S/K) ASTM A653 GRADE 40/60 (W, K/H,S) GALV. STEEL. APPLY PLATES TO EACH FACE OF TRUSS AND, UNLESS OTHERWISE LOCATED ON THIS DESIGN, POSITION PER DRAWINGS 160A-Z. ANY INSPECTION OF PLATES FOLLOWED BY (1) SHALL BE PER ANNEX A3 OF TPI1-2002 SEC.3. A SEAL ON THIS DRAWING INDICATES ACCEPTANCE OF PROFESSIONAL ENGINEERING RESPONSIBILITY SOLELY FOR THE TRUSS COMPONENT DESIGN SHOWN. THE SUITABILITY AND USE OF THIS COMPONENT FOR ANY BUILDING IS THE RESPONSIBILITY OF THE BUILDING DESIGNER PER ANSI/TPI 1 SEC. 2.

ARTHUR R. FISHER LICENSE No. 59687 STATE OF FLORIDA PROFESSIONAL ENGINEER

DEC 07 '05

TC LL	20.0 PSF	REF	R487-- 25437
TC DL	10.0 PSF	DATE	12/07/05
BC DL	10.0 PSF	DRW	HCUSR487 05341054
BC LL	0.0 PSF	HC-ENG	JB/AF
TOT.LD.	40.0 PSF	SEQN-	17785
DUR.FAC.	1.25		
SPACING	24.0"	JREF-	1SSS487_Z09

(5-509-STANLEY CRAWFORD-48 TURKEY RUN - APH1)

Top chord 2x4 SP #2 Dense
Bot chord 2x4 SP #2 Dense
Webs 2x4 SP #3

Dead loads are stated on projected horizontal area basis.

Refer to DWG PIGBACKA1103 or PIGBACKB0204 for piggyback details.
PORTION OF TRUSS UNDER PIGGYBACK IS TO BE BRACED @ 24" OC,
UNLESS OTHERWISE SPECIFIED.

110 mph wind, 19.08 ft mean hgt, ASCE 7-98, CLOSED bldg, not located within 4.50 ft from roof edge, CAT II, EXP B, wind TC DL=2.8 psf, wind BC DL=2.2 psf.

Deflection meets L/360 live and L/240 total load. Creep increase factor for dead load is 1.50.

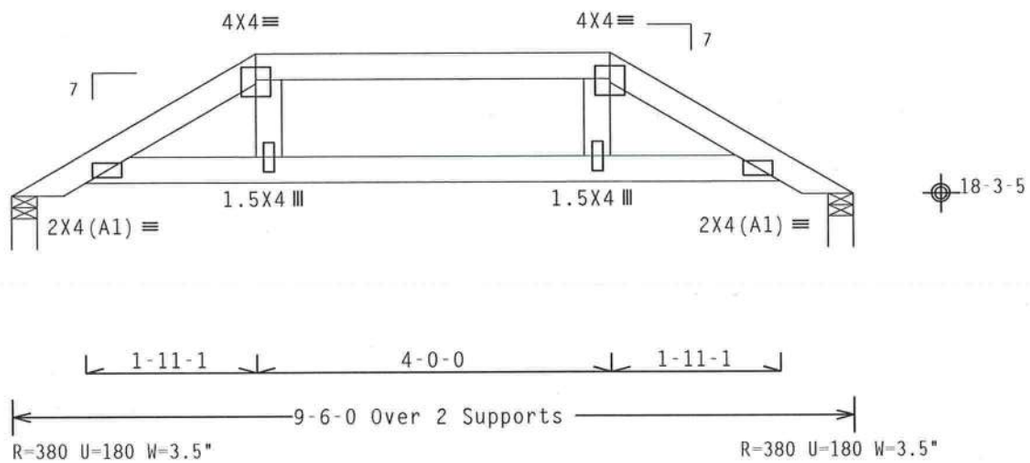

Design Crit: TPI-2002(STD)/FBC

PLT TYP. Wave | Cq/RT=1.00(1.25)/10(0) | 7.04.08 | QTY:1 | FL/-/4/-/-/R/- | Scale =.5"/Ft.

ALPINE
Alpine Engineered Products, Inc.
1950 Marley Drive
Haines City, FL 33844
FL Certificate of Authorization # 567

WARNING TRUSSES REQUIRE EXTREME CARE IN FABRICATION, HANDLING, SHIPPING, INSTALLING AND BRACING. REFER TO BCSI 1-03 (BUILDING COMPONENT SAFETY INFORMATION), PUBLISHED BY TPI (TRUSS PLATE INSTITUTE, 583 D'ONOFRIO DR., SUITE 200, MADISON, WI 53719) AND WTCA (WOOD TRUSS COUNCIL OF AMERICA, 6300 ENTERPRISE LN, MADISON, WI 53719) FOR SAFETY PRACTICES PRIOR TO PERFORMING THESE FUNCTIONS. UNLESS OTHERWISE INDICATED, TOP CHORD SHALL HAVE PROPERLY ATTACHED STRUCTURAL PANELS AND BOTTOM CHORD SHALL HAVE A PROPERLY ATTACHED RIGID CEILING.

IMPORTANTFURNISH A COPY OF THIS DESIGN TO THE INSTALLATION CONTRACTOR. ALPINE ENGINEERED PRODUCTS, INC. SHALL NOT BE RESPONSIBLE FOR ANY DEVIATION FROM THIS DESIGN; ANY FAILURE TO BUILD THE TRUSS IN CONFORMANCE WITH TPI; OR FABRICATING, HANDLING, SHIPPING, INSTALLING & BRACING OF TRUSSES. DESIGN CONFORMS WITH APPLICABLE PROVISIONS OF NDS (NATIONAL DESIGN SPEC. BY AF&PA) AND TPI. ALPINE CONNECTOR PLATES ARE MADE OF 20/18/16GA (W,H/S/K) ASTM A653 GRADE 40/60 (W, K/H,S) GALV. STEEL. APPLY PLATES TO EACH FACE OF TRUSS AND, UNLESS OTHERWISE LOCATED ON THIS DESIGN, POSITION PER DRAWINGS 160A-Z. ANY INSPECTION OF PLATES FOLLOWED BY (1) SHALL BE PER ANNEX A3 OF TPI1-2002 SEC.3. A SEAL ON THIS DRAWING INDICATES ACCEPTANCE OF PROFESSIONAL ENGINEERING RESPONSIBILITY SOLELY FOR THE TRUSS COMPONENT DESIGN SHOWN. THE SUITABILITY AND USE OF THIS COMPONENT FOR ANY BUILDING IS THE RESPONSIBILITY OF THE BUILDING DESIGNER PER ANSI/TPI 1 SEC. 2.

ARTHUR R. FISHER LICENSE No. 59687 STATE OF FLORIDA PROFESSIONAL ENGINEER

Dec 07 '05

TC LL	20.0 PSF	REF	R487-- 25438
TC DL	10.0 PSF	DATE	12/07/05
BC DL	10.0 PSF	DRW	HCUSR487 05341055
BC LL	0.0 PSF	HC-ENG	JB/AF
TOT.LD.	40.0 PSF	SEQN-	17784
DUR.FAC.	1.25		
SPACING	24.0"	JREF-	1SSS487_Z09

BEARING BLOCK NAIL SPACING DETAIL

MINIMUM SPACING FOR SINGLE BEARING BLOCK IS SHOWN. DOUBLE NAIL SPACINGS AND STAGGER NAILING FOR TWO BLOCKS. GREATER SPACING MAY BE REQUIRED TO AVOID SPLITTING.

A – EDGE DISTANCE AND SPACING BETWEEN STAGGERED ROWS OF NAILS (6 NAIL DIAMETERS)
B – SPACING OF NAILS IN A ROW (12 NAIL DIAMETERS)
C – END DISTANCE (15 NAIL DIAMETERS)

IF NAIL HOLES ARE PREBORED, SOME SPACING MAY BE REDUCED BY THE AMOUNTS GIVEN BELOW:
- • SPACING MAY BE REDUCED BY 50%
- •• SPACING MAY BE REDUCED BY 33%

BEARING BLOCK TO BE SAME SIZE AND SPECIES AS BOTTOM CHORD. BLOCKS MAY BE ANY GRADE WITHIN THE SPECIES, PROVIDED THE COMPRESSION PERPENDICULAR TO GRAIN VALUE (Fc-perp) IS AT LEAST THAT OF THE CHORD.

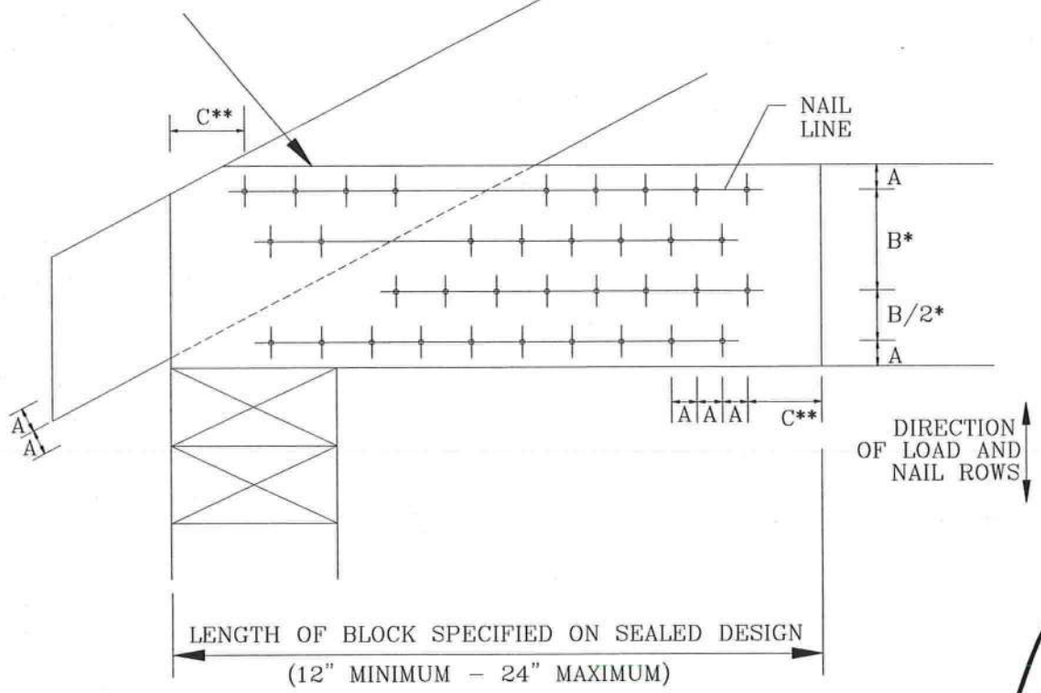

MAXIMUM NUMBER OF NAIL LINES PARALLEL TO GRAIN

NAIL TYPE	CHORD SIZE 2X4	2X6	2X8	2X10	2X12
8d BOX (0.113"X2.5")	3	6	9	12	15
10d BOX (0.128"X3")	3	5	7	10	12
12d BOX (0.128"X3.25")	3	5	7	10	12
16d BOX (0.135"X3.5")	3	5	7	10	12
20d BOX (0.148"X4")	2	4	5	6	8
8d COMMON (0.131"X2.5")	3	5	7	10	12
10d COMMON (0.148"X3")	2	4	6	8	10
12d COMMON (0.148"X3.25")	2	4	6	8	10
16d COMMON (0.162"X3.5")	2	4	6	8	10
0.120"X2.5" GUN	3	6	8	11	14
0.131"X2.5" GUN	3	5	7	10	12
0.120"X3.0" GUN	3	6	8	11	14
0.131"x3.0" GUN	3	5	7	10	12

MINIMUM NAIL SPACING DISTANCES

NAIL TYPE	DISTANCES A	B*	C**
8d BOX (0.113"X2.5")	3/4"	1 3/8"	1 3/4"
10d BOX (0.128"X3")	7/8"	1 5/8"	2"
12d BOX (0.128"X3.25")	7/8"	1 5/8"	2"
16d BOX (0.135"X3.5")	7/8"	1 5/8"	2 1/8"
20d BOX (0.148"X4")	1"	1 7/8"	2 1/4"
8d COMMON (0.131"X2.5")	7/8"	1 5/8"	2"
10d COMMON (0.148"X3")	1"	1 7/8"	2 1/4"
12d COMMON (0.148"X3.25")	1"	1 7/8"	2 1/4"
16d COMMON (0.162"X3.5")	1'	2"	2 1/2"
0.120"X2.5" GUN	3/4"	1 1/2"	1 7/8"
0.131"X2.5" GUN	7/8"	1 5/8"	2"
0.120"X3.0" GUN	3/4"	1 1/2"	1 7/8"
0.131"x3.0" GUN	7/8"	1 5/8"	2"

THIS DRAWING REPLACES DRAWING B139 AND CNBRGBLK0699

ALPINE

ALPINE ENGINEERED PRODUCTS, INC.
POMPANO BEACH, FLORIDA

WARNING TRUSSES REQUIRE EXTREME CARE IN FABRICATING, HANDLING, SHIPPING, INSTALLING AND BRACING. REFER TO BCSI 1-03 (BUILDING COMPONENT SAFETY INFORMATION), PUBLISHED BY TPI (TRUSS PLATE INSTITUTE, 583 D'ONOFRIO DR., SUITE 200, MADISON, WI. 53719) AND WTCA (WOOD TRUSS COUNCIL OF AMERICA, 6300 ENTERPRISE LN, MADISON, WI 53719) FOR SAFETY PRACTICES PRIOR TO PERFORMING THESE FUNCTIONS. UNLESS OTHERWISE INDICATED, TOP CHORD SHALL HAVE PROPERLY ATTACHED STRUCTURAL PANELS AND BOTTOM CHORD SHALL HAVE A PROPERLY ATTACHED RIGID CEILING.

IMPORTANT FURNISH COPY OF THIS DESIGN TO INSTALLATION CONTRACTOR. ALPINE ENGINEERED PRODUCTS, INC., SHALL NOT BE RESPONSIBLE FOR ANY DEVIATION FROM THIS DESIGN; ANY FAILURE TO BUILD THE TRUSS IN CONFORMANCE WITH TPI; OR FABRICATING, HANDLING, SHIPPING, INSTALLING & BRACING OF TRUSSES. DESIGN CONFORMS WITH APPLICABLE PROVISIONS OF NDS (NATIONAL DESIGN SPEC, BY AF&PA) AND TPI. ALPINE CONNECTOR PLATES ARE MADE OF 20/18/16GA (W,H/S/K) ASTM A653 GRADE 40/60 (W,K/H,S) GALV. STEEL. APPLY PLATES TO EACH FACE OF TRUSS AND, UNLESS OTHERWISE LOCATED ON THIS DESIGN, POSITION PER DRAWINGS 160A-Z. ANY INSPECTION OF PLATES FOLLOWED BY (I) SHALL BE PER ANNEX A3 OF TPI 1-2002 SEC. 3. A SEAL ON THIS DRAWING INDICATES ACCEPTANCE OF PROFESSIONAL ENGINEERING RESPONSIBILITY SOLELY FOR THE TRUSS COMPONENT DESIGN SHOWN. THE SUITABILITY AND USE OF THIS COMPONENT FOR ANY BUILDING IS THE RESPONSIBILITY OF THE BUILDING DESIGNER, PER ANSI/TPI 1 SEC. 2.

ARTHUR R. FISHER
LICENSE
No. 59687
STATE OF FLORIDA
PROFESSIONAL ENGINEER

Dec. 0

REF	BEARING BLOCK
DATE	11/26/03
DRWG	CNBRGBLK1103
-ENG	SJP/KAR

CLB WEB BRACE SUBSTITUTION

THIS DETAIL IS TO BE USED WHEN CONTINUOUS LATERAL BRACING (CLB) IS SPECIFIED ON AN ALPINE TRUSS DESIGN BUT AN ALTERNATIVE WEB BRACING METHOD IS DESIRED.

NOTES:

THIS DETAIL IS ONLY APPLICABLE FOR CHANGING THE SPECIFIED CLB SHOWN ON SINGLE PLY SEALED DESIGNS TO T-BRACING OR SCAB BRACING.

ALTERNATIVE BRACING SPECIFIED IN CHART BELOW MAY BE CONSERVATIVE. FOR MINIMUM ALTERNATIVE BRACING, RE-RUN DESIGN WITH APPROPRIATE BRACING.

WEB MEMBER SIZE	SPECIFIED CLB BRACING	ALTERNATIVE BRACING T OR L-BRACE	ALTERNATIVE BRACING SCAB BRACE
2X3 OR 2X4	1 ROW	2X4	1-2X4
2X3 OR 2X4	2 ROWS	2X6	2-2X4
2X6	1 ROW	2X4	1-2X6
2X6	2 ROWS	2X6	2-2X4(*)
2X8	1 ROW	2X6	1-2X8
2X8	2 ROWS	2X6	2-2X6(*)

T-BRACE, L-BRACE AND SCAB BRACE TO BE SAME SPECIES AND GRADE OR BETTER THAN WEB MEMBER UNLESS SPECIFIED OTHERWISE ON ENGINEER'S SEALED DESIGN.

(*) CENTER SCAB ON WIDE FACE OF WEB. APPLY (1) SCAB TO EACH FACE OF WEB.

T-BRACING OR L-BRACING:

APPLY TO EITHER SIDE OF WEB NARROW FACE

ATTACH WITH 16d NAILS AT 6" O.C.

BRACE IS A MINIMUM 80% OF WEB MEMBER LENGTH

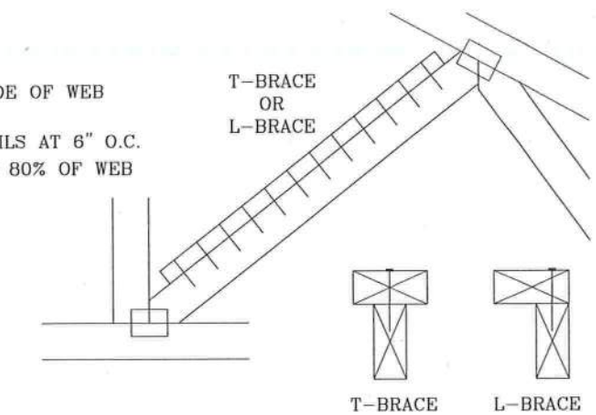

SCAB BRACING:

APPLY SCAB(S) TO WIDE FACE OF WEB.

NO MORE THAN (1) SCAB PER FACE.

ATTACH WITH 10d OR .128"x3" GUN NAILS AT 6" O.C. BRACE IS A MINIMUM 80% OF WEB MEMBER LENGTH

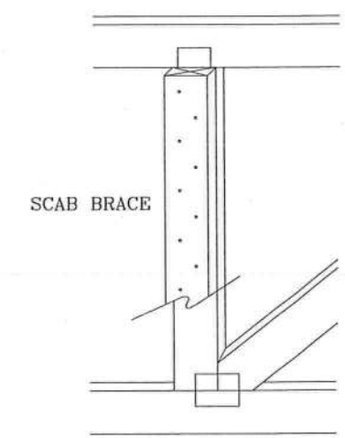

THIS DRAWING REPLACES DRAWING 579,640

ALPINE

ALPINE ENGINEERED PRODUCTS, INC.
POMPANO BEACH, FLORIDA

Dec 07

ARTHUR R. FISHER
LICENSE
No. 59687
STATE OF
FLORIDA
PROFESSIONAL ENGINEER

TC LL	PSF	REF CLB SUBST.
TC DL	PSF	DATE 11/26/03
BC DL	PSF	DRWG BRCLBSUB1103
BC LL	PSF	-ENG MLH/KAR
TOT. LD.	PSF	
DUR. FAC.		
SPACING		

ASCE 7-98: 110 MPH WIND SPEED, 15' MEAN HEIGHT, ENCLOSED, I = 1.00, EXPOSURE C

MAX GABLE VERTICAL LENGTH

2X4 GABLE VERTICAL SPACING	SPECIES	BRACE / GRADE	NO BRACES	(1) 1X4 "L" BRACE * GROUP A	(1) 1X4 "L" BRACE * GROUP B	(1) 2X4 "L" BRACE * GROUP A	(1) 2X4 "L" BRACE * GROUP B	(2) 2X4 "L" BRACE ** GROUP A	(2) 2X4 "L" BRACE ** GROUP B	(1) 2X6 "L" BRACE * GROUP A	(1) 2X6 "L" BRACE * GROUP B	(2) 2X6 "L" BRACE ** GROUP A	(2) 2X6 "L" BRACE ** GROUP B
24" O.C.	SPF HF	#1 / #2	3' 10"	6' 8"	6' 10"	7' 11"	8' 1"	9' 5"	9' 8"	12' 5"	12' 9"	14' 0"	14' 0"
		#3	3' 9"	6' 0"	6' 0"	7' 11"	7' 11"	9' 5"	9' 5"	12' 4"	12' 4"	14' 0"	14' 0"
		STUD	3' 9"	6' 0"	6' 0"	7' 11"	7' 11"	9' 5"	9' 5"	12' 3"	12' 3"	14' 0"	14' 0"
		STANDARD	3' 9"	5' 2"	5' 2"	6' 9"	6' 9"	9' 1"	9' 1"	10' 7"	10' 7"	14' 0"	14' 0"
	SP DFL	#1	4' 3"	6' 8"	7' 2"	7' 11"	8' 6"	9' 5"	10' 2"	12' 5"	13' 5"	14' 0"	14' 0"
		#2	4' 2"	6' 8"	7' 2"	7' 11"	8' 6"	9' 5"	10' 2"	12' 5"	13' 5"	14' 0"	14' 0"
		#3	4' 0"	6' 2"	6' 2"	7' 11"	8' 1"	9' 5"	9' 11"	12' 5"	12' 8"	14' 0"	14' 0"
		STUD	4' 0"	6' 1"	6' 1"	7' 11"	8' 0"	9' 5"	9' 11"	12' 5"	12' 6"	14' 0"	14' 0"
		STANDARD	3' 10"	5' 3"	5' 3"	6' 11"	6' 11"	9' 4"	9' 4"	10' 10"	10' 10"	14' 0"	14' 0"
16" O.C.	SPF HF	#1 / #2	4' 5"	7' 8"	7' 10"	9' 1"	9' 4"	10' 10"	11' 1"	14' 0"	14' 0"	14' 0"	14' 0"
		#3	4' 4"	7' 4"	7' 4"	9' 1"	9' 1"	10' 10"	10' 10"	14' 0"	14' 0"	14' 0"	14' 0"
		STUD	4' 4"	7' 4"	7' 4"	9' 1"	9' 1"	10' 10"	10' 10"	14' 0"	14' 0"	14' 0"	14' 0"
		STANDARD	4' 4"	6' 4"	6' 4"	8' 4"	8' 4"	10' 10"	10' 10"	12' 11"	12' 11"	14' 0"	14' 0"
	SP DFL	#1	4' 10"	7' 8"	8' 3"	9' 1"	9' 9"	10' 10"	11' 8"	14' 0"	14' 0"	14' 0"	14' 0"
		#2	4' 9"	7' 8"	8' 3"	9' 1"	9' 9"	10' 10"	11' 8"	14' 0"	14' 0"	14' 0"	14' 0"
		#3	4' 6"	7' 7"	7' 7"	9' 1"	9' 6"	10' 10"	11' 4"	14' 0"	14' 0"	14' 0"	14' 0"
		STUD	4' 6"	7' 6"	7' 6"	9' 1"	9' 6"	10' 10"	11' 4"	14' 0"	14' 0"	14' 0"	14' 0"
		STANDARD	4' 5"	6' 5"	6' 5"	8' 6"	8' 6"	10' 10"	11' 1"	13' 3"	13' 3"	14' 0"	14' 0"
12" O.C.	SPF HF	#1 / #2	4' 11"	8' 5"	8' 8"	10' 0"	10' 3"	11' 11"	12' 3"	14' 0"	14' 0"	14' 0"	14' 0"
		#3	4' 9"	8' 5"	8' 5"	10' 0"	10' 0"	11' 11"	11' 11"	14' 0"	14' 0"	14' 0"	14' 0"
		STUD	4' 9"	8' 5"	8' 5"	10' 0"	10' 0"	11' 11"	11' 11"	14' 0"	14' 0"	14' 0"	14' 0"
		STANDARD	4' 9"	7' 3"	7' 3"	9' 7"	9' 7"	11' 11"	11' 11"	14' 0"	14' 0"	14' 0"	14' 0"
	SP DFL	#1	5' 4"	8' 5"	9' 1"	10' 0"	10' 9"	11' 11"	12' 10"	14' 0"	14' 0"	14' 0"	14' 0"
		#2	5' 3"	8' 5"	9' 1"	10' 0"	10' 9"	11' 11"	12' 10"	14' 0"	14' 0"	14' 0"	14' 0"
		#3	5' 0"	8' 5"	8' 5"	10' 0"	10' 6"	11' 11"	12' 6"	14' 0"	14' 0"	14' 0"	14' 0"
		STUD	5' 0"	8' 5"	8' 7"	10' 0"	10' 6"	11' 11"	12' 6"	14' 0"	14' 0"	14' 0"	14' 0"
		STANDARD	4' 11"	7' 5"	7' 5"	9' 10"	9' 10"	11' 11"	12' 3"	14' 0"	14' 0"	14' 0"	14' 0"

BRACING GROUP SPECIES AND GRADES:

GROUP A:

SPRUCE-PINE-FIR

#1 / #2	STANDARD
#3	STUD

HEM-FIR

#2	STUD
#3	STANDARD

DOUGLAS FIR-LARCH

#3
STUD
STANDARD

SOUTHERN PINE

#3
STUD
STANDARD

GROUP B:

HEM-FIR

#1 & BTR
#1

SOUTHERN PINE

#1
#2

DOUGLAS FIR-LARCH

#1
#2

GABLE TRUSS DETAIL NOTES:

LIVE LOAD DEFLECTION CRITERIA IS L/240.

PROVIDE UPLIFT CONNECTIONS FOR 80 PLF OVER CONTINUOUS BEARING (5 PSF TC DEAD LOAD).

GABLE END SUPPORTS LOAD FROM 4' 0" OUTLOOKERS WITH 2' 0" OVERHANG, OR 12" PLYWOOD OVERHANG.

ATTACH EACH "L" BRACE WITH 10d NAILS.

* FOR (1) "L" BRACE: SPACE NAILS AT 2" O.C. IN 18" END ZONES AND 4" O.C. BETWEEN ZONES.

** FOR (2) "L" BRACES: SPACE NAILS AT 3" O.C. IN 18" END ZONES AND 6" O.C. BETWEEN ZONES.

"L" BRACING MUST BE A MINIMUM OF 80% OF WEB MEMBER LENGTH.

GABLE VERTICAL PLATE SIZES

VERTICAL LENGTH	NO SPLICE
LESS THAN 4' 0"	1X4 OR 2X3
GREATER THAN 4' 0", BUT LESS THAN 11' 6"	2X4
GREATER THAN 11' 6"	2.5X4

+ REFER TO COMMON TRUSS DESIGN FOR PEAK, SPLICE, AND HEEL PLATES.

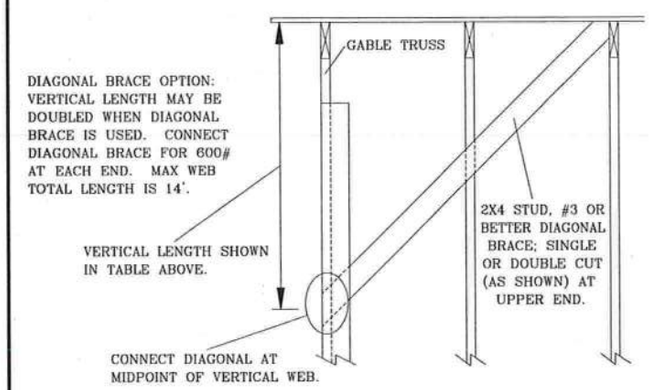

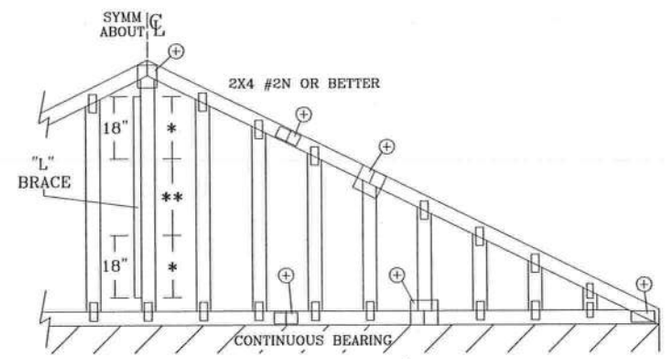

REFER TO CHART ABOVE FOR MAX GABLE VERTICAL LENGTH.

ALPINE

ALPINE ENGINEERED PRODUCTS, INC.
POMPANO BEACH, FLORIDA

WARNING TRUSSES REQUIRE EXTREME CARE IN FABRICATING, HANDLING, SHIPPING, INSTALLING AND BRACING. REFER TO BCSI 1-03 (BUILDING COMPONENT SAFETY INFORMATION), PUBLISHED BY TPI (TRUSS PLATE INSTITUTE, 583 D'ONOFRIO DR., SUITE 200, MADISON, WI. 53719) AND WTCA (WOOD TRUSS COUNCIL OF AMERICA, 6300 ENTERPRISE LN, MADISON, WI 53719) FOR SAFETY PRACTICES PRIOR TO PERFORMING THESE FUNCTIONS. UNLESS OTHERWISE INDICATED, TOP CHORD SHALL HAVE PROPERLY ATTACHED STRUCTURAL PANELS AND BOTTOM CHORD SHALL HAVE A PROPERLY ATTACHED RIGID CEILING.

IMPORTANT FURNISH COPY OF THIS DESIGN TO INSTALLATION CONTRACTOR. ALPINE ENGINEERED PRODUCTS, INC., SHALL NOT BE RESPONSIBLE FOR ANY DEVIATION FROM THIS DESIGN; ANY FAILURE TO BUILD THE TRUSS IN CONFORMANCE WITH TPI; OR FABRICATING, HANDLING, SHIPPING, INSTALLING & BRACING OF TRUSSES. DESIGN CONFORMS WITH APPLICABLE PROVISIONS OF NDS (NATIONAL DESIGN SPEC, BY AF&PA) AND TPI. ALPINE CONNECTOR PLATES ARE MADE OF 20/18/16GA (W,H/S/K) ASTM A653 GRADE 40/60 (W,K/H,S) GALV. STEEL. APPLY PLATES TO EACH FACE OF TRUSS AND, UNLESS OTHERWISE LOCATED ON THIS DESIGN, POSITION PER DRAWINGS 160A-Z. ANY INSPECTION OF PLATES FOLLOWED BY (I) SHALL BE PER ANNEX A3 OF TPI 1-2002 SEC. 3. A SEAL ON THIS DRAWING INDICATES ACCEPTANCE OF PROFESSIONAL ENGINEERING RESPONSIBILITY SOLELY FOR THE TRUSS COMPONENT DESIGN SHOWN. THE SUITABILITY AND USE OF THIS COMPONENT FOR ANY BUILDING IS THE RESPONSIBILITY OF THE BUILDING DESIGNER, PER ANSI/TPI 1 SEC. 2.

ARTHUR R. FISHER
LICENSE
No. 59687
STATE OF FLORIDA
PROFESSIONAL ENGINEER

MAX. TOT. LD. 60 PSF

MAX. SPACING 24.0"

REF	ASCE7-98-GAB11015
DATE	11/26/03
DRWG	A11015EC1103
-ENG	

GABLE DETAIL
FOR LET-IN VERTICALS

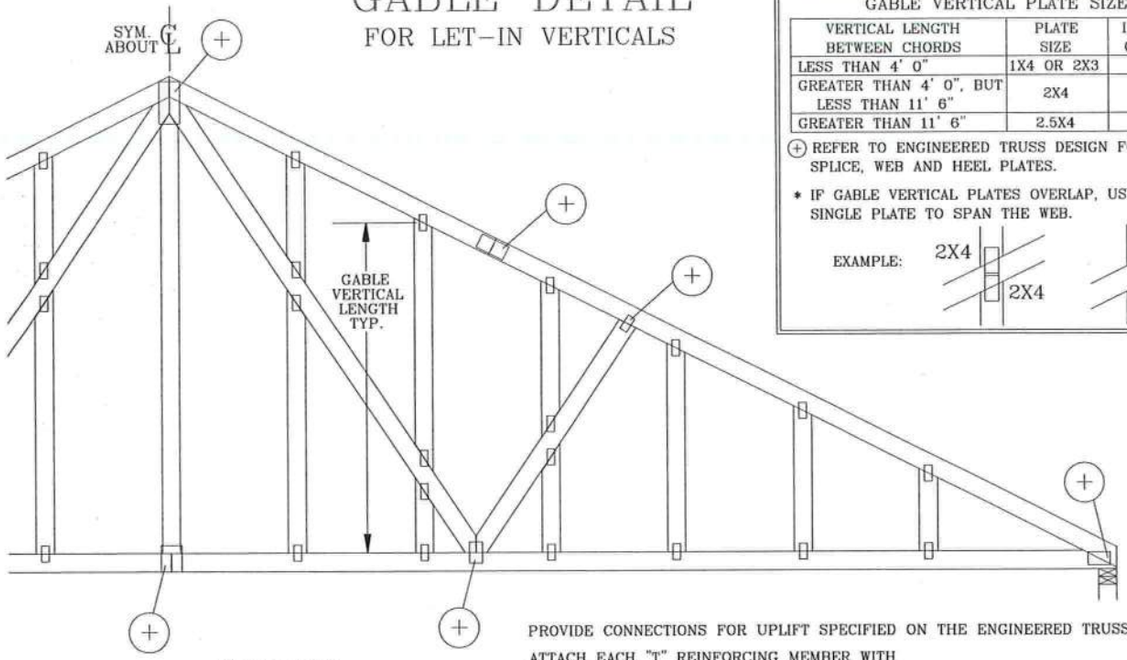

GABLE VERTICAL PLATE SIZES		
VERTICAL LENGTH BETWEEN CHORDS	PLATE SIZE	IF PLATES OVERLAP*
LESS THAN 4' 0"	1X4 OR 2X3	2X8
GREATER THAN 4' 0", BUT LESS THAN 11' 6"	2X4	2X8
GREATER THAN 11' 6"	2.5X4	2.5X8

(+) REFER TO ENGINEERED TRUSS DESIGN FOR PEAK, SPLICE, WEB AND HEEL PLATES.

* IF GABLE VERTICAL PLATES OVERLAP, USE A SINGLE PLATE TO SPAN THE WEB.

EXAMPLE:

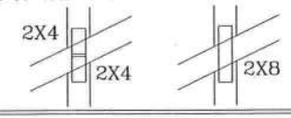

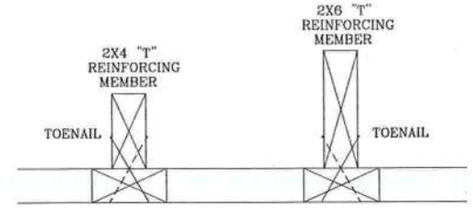

TO CONVERT FROM "L" TO "T" REINFORCING MEMBERS, MULTIPLY "T" FACTOR BY LENGTH (BASED ON GABLE VERTICAL SPECIES, GRADE AND SPACING) FOR (1) 2X4 "L" BRACE, GROUP A, OBTAINED FROM THE APPROPRIATE ALPINE GABLE DETAIL FOR ASCE OR SBCCI WIND LOAD.

MAXIMUM ALLOWABLE "T" REINFORCED GABLE VERTICAL LENGTH IS 14' FROM TOP TO BOTTOM CHORD.

WEB LENGTH INCREASE W/ "T" BRACE

WIND SPEED AND MRH	"T" REINF. MBR. SIZE	SBCCI	ASCE
110 MPH	2x4	10 %	10 %
15 FT	2x6	40 %	50 %
110 MPH	2x4	10 %	10 %
30 FT	2x6	50 %	50 %
100 MPH	2x4	10 %	10 %
15 FT	2x6	30 %	50 %
100 MPH	2x4	10 %	10 %
30 FT	2x6	40 %	40 %
90 MPH	2x4	20 %	10 %
15 FT	2x6	20 %	40 %
90 MPH	2x4	10 %	10 %
30 FT	2x6	30 %	50 %
80 MPH	2x4	10 %	20 %
15 FT	2x6	10 %	30 %
80 MPH	2x4	20 %	10 %
30 FT	2x6	20 %	40 %
70 MPH	2x4	0 %	20 %
15 FT	2x6	0 %	20 %
70 MPH	2x4	10 %	20 %
30 FT	2x6	10 %	30 %

EXAMPLE:
ASCE WIND SPEED = 100 MPH
MEAN ROOF HEIGHT = 30 FT
GABLE VERTICAL = 24" O.C. SP #3
"T" REINFORCING MEMBER SIZE = 2X4
"T" BRACE INCREASE (FROM ABOVE) = 10% = 1.10
(1) 2X4 "L" BRACE LENGTH = 6' 7"
MAXIMUM "T" REINFORCED GABLE VERTICAL LENGTH
1.10 x 6' 7" = 7' 3"

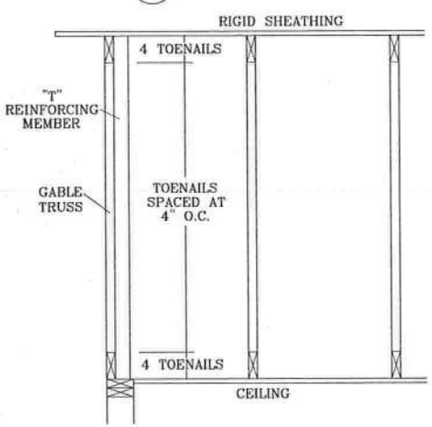

PROVIDE CONNECTIONS FOR UPLIFT SPECIFIED ON THE ENGINEERED TRUSS DESIGN.

ATTACH EACH "T" REINFORCING MEMBER WITH
HAND DRIVEN NAILS:
10d COMMON TOENAILS AT 4" O.C. PLUS (4) 16d COMMON TOENAILS IN TOP AND BOTTOM CHORD.
GUN DRIVEN NAILS – 0.131" X 3":
TOENAILS AT 4" O.C. PLUS (4) TOENAILS IN TOP AND BOTTOM CHORD.

THIS DETAIL TO BE USED WITH THE APPROPRIATE ALPINE GABLE DETAIL FOR ASCE OR SBCCI WIND LOAD.
ASCE 7-93 GABLE DETAIL DRAWINGS
A11015EN1103, A10015EN1103, A09015EN1103, A08015EN1103, A07015EN1103
A11030EN1103, A10030EN1103, A09030EN1103, A08030EN1103, A07030EN1103
ASCE 7-98 GABLE DETAIL DRAWINGS
A13015EC1103, A12015EC1103, A11015EC1103, A10015EC1103, A08515EC1103
A13030EC1103, A12030EC1103, A11030EC1103, A10030EC1103, A08530EC1103
SBCCI GABLE DETAIL DRAWINGS
S11015EN1103, S10015EN1103, S09015EN1103, S08015EN1103, S07015EN1103
S11030EN1103, S10030EN1103, S09030EN1103, S08030EN1103, S07030EN1103

SEE APPROPRIATE ALPINE GABLE DETAIL (ASCE OR SBCCI WIND LOAD) FOR MAXIMUM UNREINFORCED GABLE VERTICAL LENGTH.

REPLACES DRAWINGS GAB98117 876,719 & HC26294035

ALPINE
ALPINE ENGINEERED PRODUCTS, INC.
POMPANO BEACH, FLORIDA

WARNING TRUSSES REQUIRE EXTREME CARE IN FABRICATING, HANDLING, SHIPPING, INSTALLING AND BRACING. REFER TO BCSI 1-03 (BUILDING COMPONENT SAFETY INFORMATION), PUBLISHED BY TPI (TRUSS PLATE INSTITUTE, 583 D'ONOFRIO DR., SUITE 200, MADISON, WI. 53719) AND WTCA (WOOD TRUSS COUNCIL OF AMERICA, 6300 ENTERPRISE LN, MADISON, WI 53719) FOR SAFETY PRACTICES PRIOR TO PERFORMING THESE FUNCTIONS. UNLESS OTHERWISE INDICATED, TOP CHORD SHALL HAVE PROPERLY ATTACHED STRUCTURAL PANELS AND BOTTOM CHORD SHALL HAVE A PROPERLY ATTACHED RIGID CEILING.

IMPORTANT FURNISH COPY OF THIS DESIGN TO INSTALLATION CONTRACTOR. ALPINE ENGINEERED PRODUCTS, INC., SHALL NOT BE RESPONSIBLE FOR ANY DEVIATION FROM THIS DESIGN; ANY FAILURE TO BUILD THE TRUSS IN CONFORMANCE WITH TPI; OR FABRICATING, HANDLING, SHIPPING, INSTALLING & BRACING OF TRUSSES. DESIGN CONFORMS WITH APPLICABLE PROVISIONS OF NDS (NATIONAL DESIGN SPEC, BY AF&PA) AND TPI. ALPINE CONNECTOR PLATES ARE MADE OF 20/18/16GA (W,H/S/K) ASTM A653 GRADE 40/60 (W,K/H,S) GALV. STEEL. APPLY PLATES TO EACH FACE OF TRUSS AND, UNLESS OTHERWISE LOCATED ON THIS DESIGN, POSITION PER DRAWINGS 160A-Z. ANY INSPECTION OF PLATES FOLLOWED BY (I) SHALL BE PER ANNEX A3 OF TPI 1-2002 SEC. 3. A SEAL ON THIS DRAWING INDICATES ACCEPTANCE OF PROFESSIONAL ENGINEERING RESPONSIBILITY SOLELY FOR THE TRUSS COMPONENT DESIGN SHOWN. THE SUITABILITY AND USE OF THIS COMPONENT FOR ANY BUILDING IS THE RESPONSIBILITY OF THE BUILDING DESIGNER, PER ANSI/TPI 1 SEC. 2.

ARTHUR BRAUSHER
LICENSE
No. 59687
STATE OF FLORIDA
PROFESSIONAL ENGINEER

Dec

MAX TOT. LD. 60 PSF
DUR. FAC. ANY
MAX SPACING 24.0"

REF	LET-IN VERT
DATE	01/16/04
DRWG	GBLLETIN1103
-ENG	DLJ/KAR

PIGGYBACK DETAIL

TOP CHORD 2X4 #2 OR BETTER
BOT CHORD 2X4 #2 OR BETTER
WEBS 2X4 #3 OR BETTER

REFER TO SEALED DESIGN FOR DASHED PLATES.

SPACE PIGGYBACK VERTICALS AT 4' OC MAX.

TOP AND BOTTOM CHORD SPLICES MUST BE STAGGERED SO THAT ONE SPLICE IS NOT DIRECTLY OVER ANOTHER.

PIGGYBACK BOTTOM CHORD MAY BE OMITTED. ATTACH VERTICAL WEBS TO TRUSS TOP CHORD WITH 1.5X3 PLATE.

ATTACH PURLINS TO TOP OF FLAT TOP CHORD. IF PIGGYBACK IS SOLID LUMBER OR THE BOTTOM CHORD IS OMITTED, PURLINS MAY BE APPLIED BENEATH THE TOP CHORD OF SUPPORTING TRUSS.

REFER TO ENGINEER'S SEALED DESIGN FOR REQUIRED PURLIN SPACING.

THIS DETAIL IS APPLICABLE FOR THE FOLLOWING WIND CONDITIONS:

130 MPH WIND, 30' MEAN HGT, ASCE 7-02, CLOSED BLDG, LOCATED ANYWHERE IN ROOF, CAT II, EXP C, WIND TC DL=5 PSF, WIND BC DL=5 PSF

110 MPH WIND, 30' MEAN HGT, SBC ENCLOSED BLDG, LOCATED ANYWHERE IN ROOF WIND TC DL=5 PSF, WIND BC DL=5 PSF

130 MPH WIND, 30' MEAN HGT, ASCE 7-98, CLOSED BLDG, LOCATED ANYWHERE IN ROOF, CAT II, EXP. C, WIND TC DL=5 PSF, WIND BC DL=5 PSF

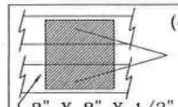

(4) 6d BOX (0.099"X 2.",MIN) NAILS.

8" X 8" X 1/2" RATED SHEATHING GUSSETS (EACH FACE) MAY BE USED IN LIEU OF TRULOX PLATES, ATTACH WITH (8) 6d BOX (0.099"X 2.",MIN) NAILS PER GUSSET.

(4) IN CAP BC AND (4) IN BASE TRUSS FLAT TC.

JOINT TYPE	SPANS UP TO			
	30'	34'	38'	52'
A	2X4	2.5X4	2.5X4	3X5
B	4X6	5X6	5X6	5X6
C	1.5X3	1.5X4	1.5X4	1.5X4
D	5X4	5X5	5X5	5X6
E	4X6 OR 3X6 TRULOX AT 4' OC, ROTATED VERTICALLY			

ATTACH TRULOX PLATES WITH (8) 0.120" X 1.375" NAILS, OR EQUAL, PER FACE PER PLY. (4) NAILS IN EACH MEMBER TO BE CONNECTED. REFER TO DRAWING 160 TL FOR TRULOX INFORMATION.

FRONT FACE (E,*) PLATES MAY BE OFFSET FROM BACK FACE PLATES AS LONG AS BOTH FACES ARE SPACED 4' OC MAX.

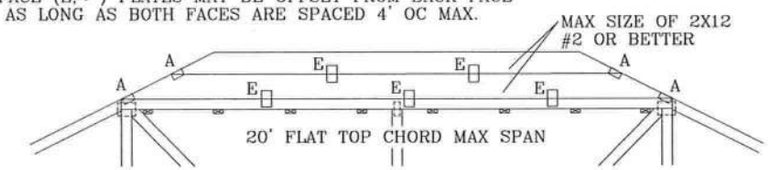

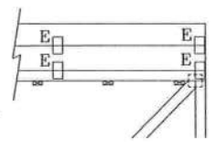

WEB BRACING CHART	
WEB LENGTH	REQUIRED BRACING
0' TO 7'9"	NO BRACING
7'9" TO 10'	1x4 "T" BRACE. SAME GRADE, SPECIES AS WEB MEMBER, OR BETTER, AND 80% LENGTH OF WEB MEMBER. ATTACH WITH 8d BOX (0.113"X 2.5",MIN) NAILS AT 4" OC.
10' TO 14'	2x4 "T" BRACE. SAME GRADE, SPECIES AS WEB MEMBER, OR BETTER, AND 80% LENGTH OF WEB MEMBER. ATTACH WITH 16d BOX (0.135"X 3.5",MIN) NAILS AT 4" OC.

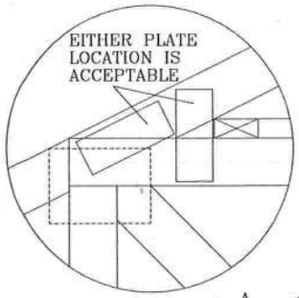

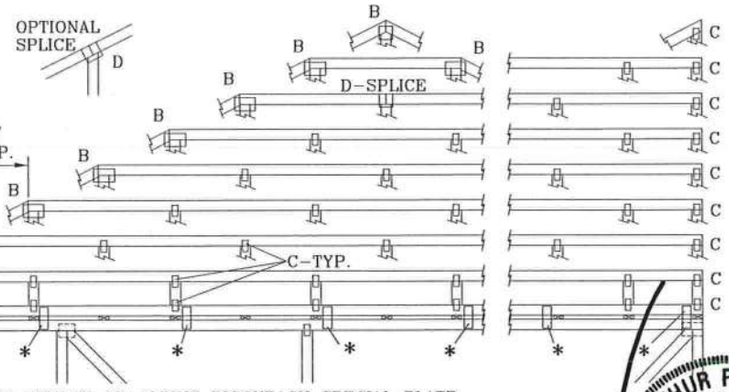

*ATTACH PIGGYBACK WITH 3X8 TRULOX OR ALPINE PIGGYBACK SPECIAL PLATE.

* PIGGYBACK SPECIAL PLATE

ATTACH TEETH TO THE PIGGYBACK AT THE TIME OF FABRICATION. ATTACH TO SUPPORTING TRUSS WITH (4) 0.120" X 1.375" NAILS PER FACE PER PLY. APPLY PIGGYBACK SPECIAL PLATE TO EACH TRUSS FACE AND SPACE 4' OC OR LESS.

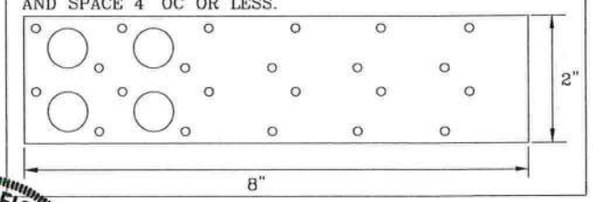

THIS DRAWING REPLACES DRAWINGS 634,016 634,017 & 847,045

ALPINE

ALPINE ENGINEERED PRODUCTS, INC.
POMPANO BEACH, FLORIDA

WARNING TRUSSES REQUIRE EXTREME CARE IN FABRICATING, HANDLING, SHIPPING, INSTALLING AND BRACING. REFER TO BCSI 1-03 (BUILDING COMPONENT SAFETY INFORMATION), PUBLISHED BY TPI (TRUSS PLATE INSTITUTE, 583 D'ONOFRIO DR., SUITE 200, MADISON, WI. 53719) AND WTCA (WOOD TRUSS COUNCIL OF AMERICA, 6300 ENTERPRISE LN, MADISON, WI 53719) FOR SAFETY PRACTICES PRIOR TO PERFORMING THESE FUNCTIONS. UNLESS OTHERWISE INDICATED, TOP CHORD SHALL HAVE PROPERLY ATTACHED STRUCTURAL PANELS AND BOTTOM CHORD SHALL HAVE A PROPERLY ATTACHED RIGID CEILING.

IMPORTANT FURNISH COPY OF THIS DESIGN TO INSTALLATION CONTRACTOR. ALPINE ENGINEERED PRODUCTS, INC., SHALL NOT BE RESPONSIBLE FOR ANY DEVIATION FROM THIS DESIGN; ANY FAILURE TO BUILD THE TRUSS IN CONFORMANCE WITH TPI; OR FABRICATING, HANDLING, SHIPPING, INSTALLING & BRACING OF TRUSSES. DESIGN CONFORMS WITH APPLICABLE PROVISIONS OF NDS (NATIONAL DESIGN SPEC, BY AF&PA) AND TPI. ALPINE CONNECTOR PLATES ARE MADE OF 20/18/16GA (W,H/S/K) ASTM A653 GRADE 40/60 (W,K/H,S) GALV. STEEL. APPLY PLATES TO EACH FACE OF TRUSS AND, UNLESS OTHERWISE LOCATED ON THIS DESIGN, POSITION PER DRAWINGS 160A-Z. ANY INSPECTION OF PLATES FOLLOWED BY (I) SHALL BE PER ANNEX A3 OF TPI 1-2002 SEC. 3. A SEAL ON THIS DRAWING INDICATES ACCEPTANCE OF PROFESSIONAL ENGINEERING RESPONSIBILITY SOLELY FOR THE TRUSS COMPONENT DESIGN SHOWN. THE SUITABILITY AND USE OF THIS COMPONENT FOR ANY BUILDING IS THE RESPONSIBILITY OF THE BUILDING DESIGNER, PER ANSI/TPI 1 SEC. 2.

ARTHUR R. FISHER
LICENSE
No. 59687
STATE OF
FLORIDA
PROFESSIONAL ENGINEER

DEC

MAX LOADING

55 PSF AT 1.33 DUR. FAC.

50 PSF AT 1.25 DUR. FAC.

47 PSF AT 1.15 DUR. FAC.

SPACING 24.0"

REF	PIGGYBACK
DATE	04/14/05
DRWG	PIGBACKB0405
-ENG	DLJ/KAR

1847

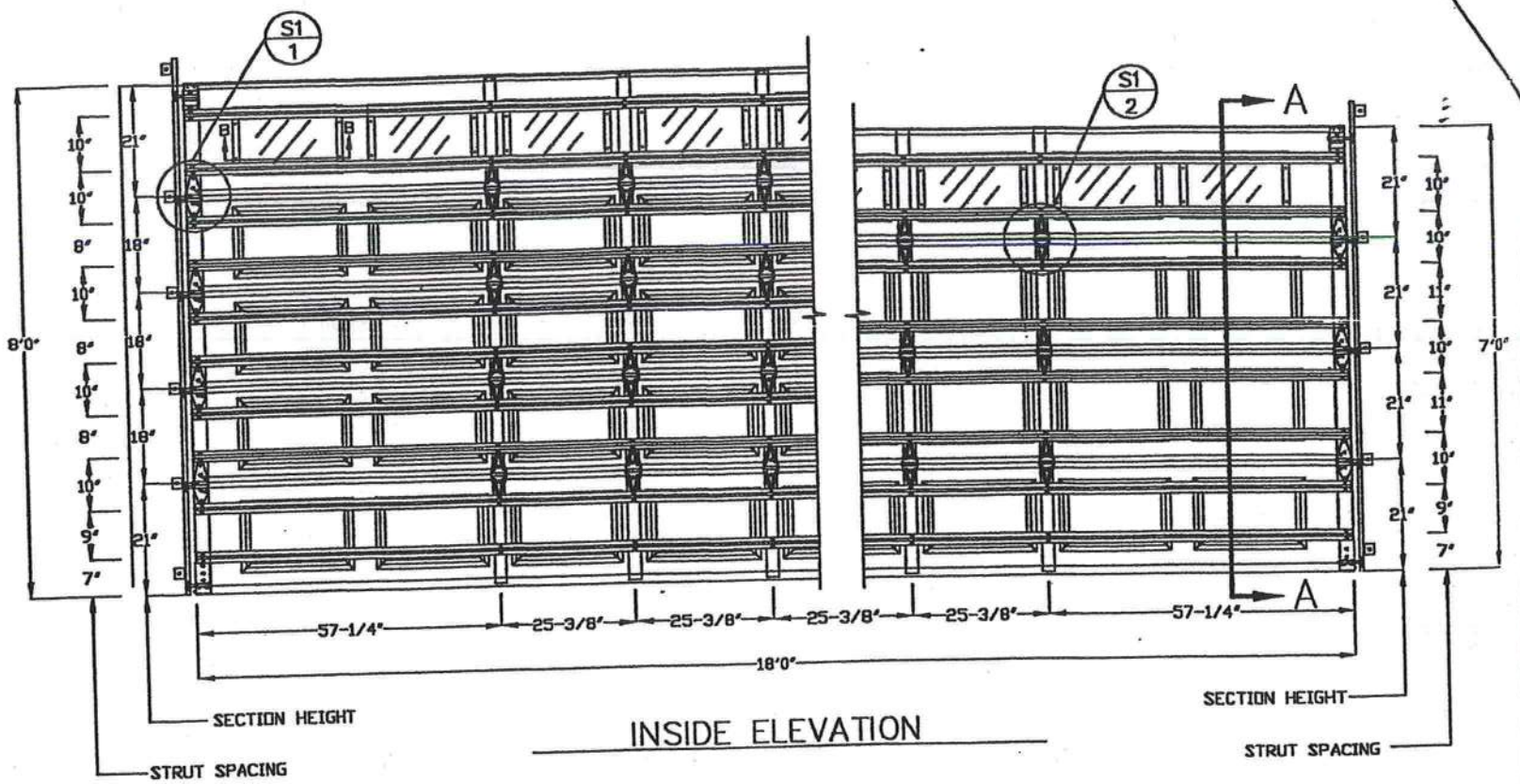

INSIDE ELEVATION

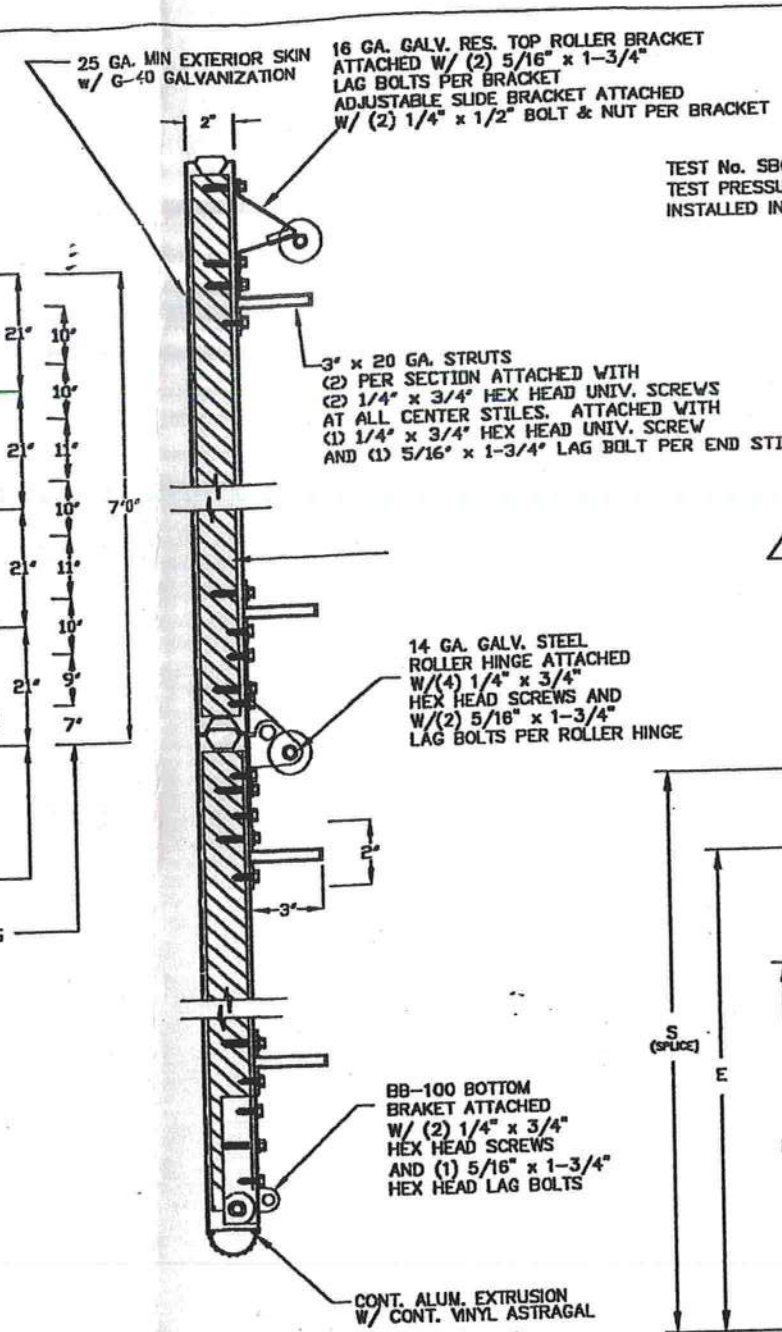

SECTION A-A (SIDE VIEW)

GLAZING OPTION CROSS SECTION

TEST No. SBC-580-011 ON OCTOBER 12, 1995 INCLUDED GLASS WINDOWS IN THE DOOR BEING USED. THE TEST PRESSURES WERE +48.4 PSF AND -54.7 PSF. BY COMPARISION, EIGHT (8) WINDOWS MAY BE INSTALLED IN (1) ONE SECTION OF THE 18' X 7' AND 18' X 8' MODEL 600 AND 950 DOORS.

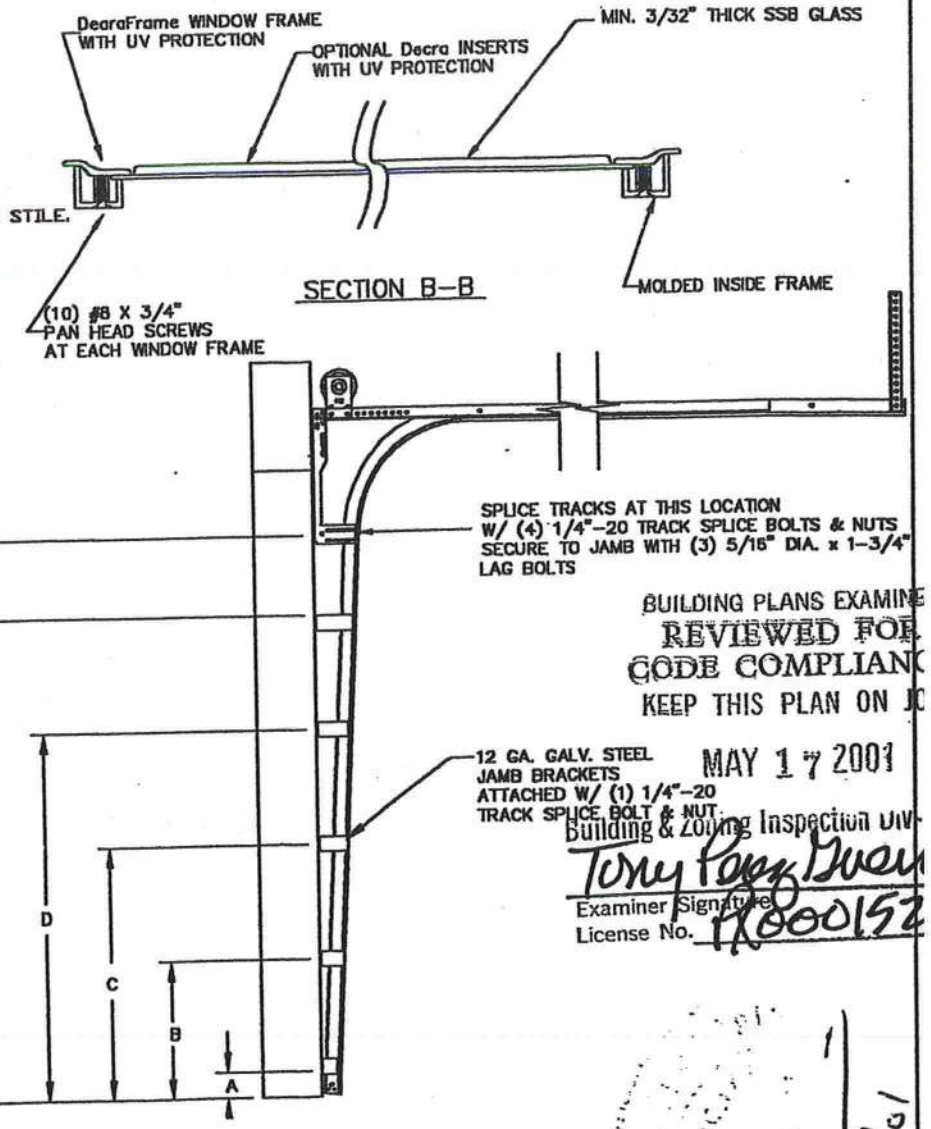

SECTION B-B

TRACK CONFIGURATION FOR 6'6" UP TO 8' TALL DOORS

BUILDING PLANS EXAMINED
REVIEWED FOR
CODE COMPLIANCE
KEEP THIS PLAN ON JOB
MAY 17 2001
Building & Zoning Inspection Div.
Tony Perez Duran
Examiner Signature
License No. TX000152

4/25/01

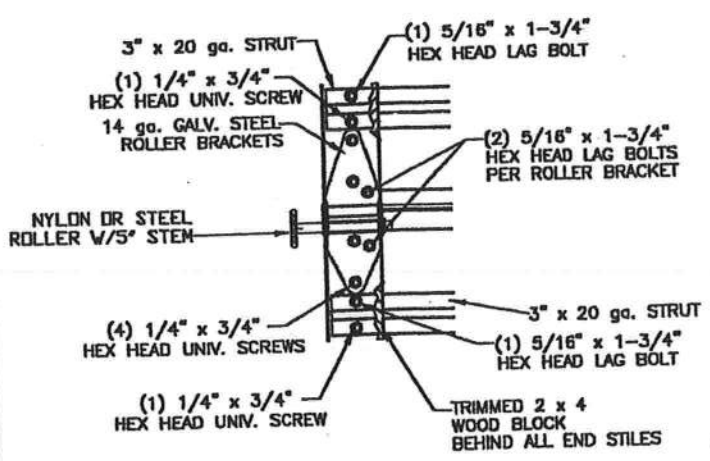

ROLLER BRACKET (TYP) S1/1
NTS

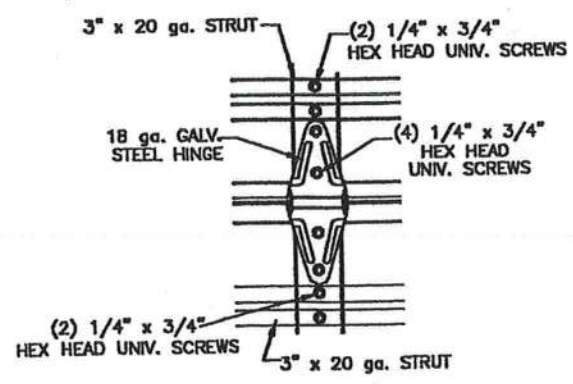

HINGE CONNECTION S1/2
NTS

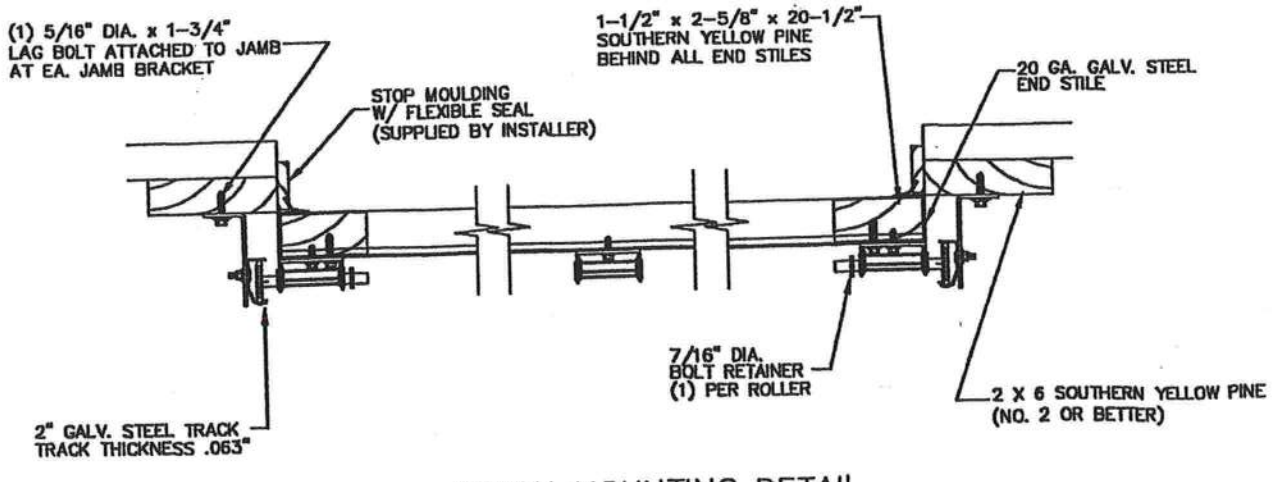

TRACK MOUNTING DETAIL

WOOD JAMB ATTACHMENT TO STRUCTURE

RATED FOR 100 MPH FASTEST-MILE BASIC WIND SPEEDS

VERTICAL JAMB ATTACHMENT TO WOOD FRAME STRUCTURE
5/16" X 3" LAG SCREWS STARTING 6" FROM ENDS THEN 16" O.C.

VERTICAL JAMB ATTACHMENT TO 3,000 PSI CONCRETE
HILTI KWIK BOLT 3/8" X 4" STARTING 6" FROM ENDS THEN 24" O.C.
HILTI SLEEVE ANCHOR 3/8" X 2-3/4" STARTING 6" FROM ENDS THEN 24" O.C.
ITW/RAMSET RED HEAD 3/8" X 3" STARTING 6" FROM ENDS THEN 24" O.C.

VERTICAL JAMB ATTACHMENT TO C-90 BLOCK
HILTI SLEEVE ANCHOR 3/8" X 2-3/4" STARTING 6" FROM ENDS THEN 16" O.C.
ITW/RAMSET TAPCON 1/4" X 2-3/4" STARTING 6" FROM ENDS, USE PAIRS OF FASTENERS (3" APART) AT 16" O.C.

*LAGS AND BOLTS CAN BE COUNTERSUNK TO PROVIDE A FLUSH MOUNTING SURFACE.
*PREPARATION OF WOOD JAMBS BY OTHERS

JAMB BRACKET LOCATIONS

	A	B	C	D	E	S
6'-6"	4"	21-1/2"	39"	57"		70"
7'-0"	4"	21-1/2"	42"	63"		76"
7'-6"	4"	18"	36"	54"	72"	82"
8'-0"	4"	21-1/2"	39"	57"	75"	88"

SPECIFICATIONS AND NOTES

1. DOORS AND HARDWARE WILL BE DESIGNED, MANUFACTURED AND INSTALLED WITH STANDARDS AS SET FORTH BY DASMA.
2. DOOR SECTIONS SHALL BE 25 GA. (.019") MIN. ROLL FORMED LIGHT COMMERCIAL QUALITY, G-40 GALVANIZATION.
3. DOORS UPTO 7'0" HIGH CONSIST OF (4) SECTIONS AS SHOWN.
4. DOORS UPTO 8'0" HIGH CONSIST OF (5) SECTIONS AS SHOWN.
5. SUPPORTING STRUCTURAL ELEMENTS SHALL BE DESIGNED BY A REGISTRED PROFESSIONAL ENGINEER FOR WIND LOADS INDICATED ON THIS DRAWING IN ADDITION TO OTHER LOADINGS.
6. THE METHOD OF TESTING WAS IN SUBSTANTIAL CONFORMANCE WITH THE PROCEDURE DESCRIBED IN ASTM E330-90, AND THE SOUTHERN BUILDING CODE SECTION 1606 WIND LOAD DESIGN CRITERIA THE PRESSURES SHOWN ON THE DRAWINGS WERE CALCULATED USING THE FOLLOWING PARAMETERS:
   A. BASIC WIND SPEED OF 100 MPH
   B. DOOR CAN BE INSTALLED WITH 5 FEET OF DOORS WIDTH INSIDE THE EDGE STRIP.
   C. 15' MEAN ROOF HEIGHT AT ANY SLOPE
   D. USE FACTOR OF 1.0
   E. EXPOSURE RATING OF C

MAX SIZE
18' x 8'

DESIGN LOADS
+23.6 PSF
-24.5 PSF

TEST LOADS
+35.4 PSF
-36.8 PSF

REV	DESCRIPTION OF REVISIONS	DATE	BY

Amarr GARAGE DOORS
5931 GRASSY CREEK BLVD. WINSTON-SALEM, N.C. 27105

MODEL #600 STRATFORD
MODEL #950 HERITAGE III

SIZE	DRAWN BY JLJ	DATE 04/05/01	DRAWING NUMBER
B	CHECKED BY	DATE	SBC-580-017-J
SCALE: NOT TO SCALE			SHEET 1 OF 1

TR 48

Notice of Intent for Preventative Treatment for Termites

(As required by Florida Building Code 104.2.6)

Date: 12/6/05

334 SW Phillips Cir — Lake City

(Address of Treatment or Lot/Block of Treatment) — City

Florida Pest Control & Chemical Co.

www.flapest.com

Product to be used: Bora-Care Termiticide (Wood Treatment)

Chemical to be used: 23% Disodium Octaborate Tetrahydrate

Application will be performed onto structural wood at dried-in stage of construction. Bora-Care Termiticide application shall be applied according to EPA registered label directions as stated in the Florida Building Code Section 1861.1.8

(Information to be provided to local building code offices prior to concrete foundation installation.)

6/04 ©

Notice of Treatment

18806

Applicator: Florida Pest Control & Chemical Co. (www.flapest.com)

Address: 1394 NW

City LC Phone 752-1705

Site Location: Subdivision Turkey Run

Lot # 48 Block# Permit # 23983

Address 334 SW Phillips Circle

Product used	Active Ingredient	% Concentration
☐ Premise	Imidacloprid	0.1%
☐ Termidor	Fipronil	0.12%
☐ Bora-Care	Disodium Octaborate Tetrahydrate	23.0%

Type treatment: ☐ Soil ☐ Wood

Area Treated	Square feet	Linear feet	Gallons Applied
Dwelling	3000	884	55

As per Florida Building Code 104.2.6 – If soil chemical barrier method for termite prevention is used, final exterior treatment shall be completed prior to final building approval.

If this notice is for the final exterior treatment, initial this line _____.

2-17-06 — 1610 — Sunny

Date — Time — Print Technician's Name

Remarks: _____

Applicator - White Permit File - Canary Permit Holder - Pink

10/05 ©