W.B. Howland Truss Co.
P.O. Box 700
Live Oak, FL 32064
(386)362-1235
(386)362-7124 (fax)

ROOF PITCH: 7/12
CLG PITCH: 4/12
OVERHANG: 1'6"
LOADING: 40
WIND LOAD: 130
EXPOSURE: C
FBC 2020 RESIDENTIAL
EXT. WALLS: 2x4 FRAMING
REVISED: 2/10/23

NOTES:

- INTERIOR GARAGE WALL USED AS INTERIOR BEARING POINTS.

- ALL VALLEYS FRAMED WITH TRUSS DESIGN.

- ALL GABLE END TRUSSES HAVE A DROPPED TOP CHORD FOR 2x4 OUTLOOKERS.

TRUSS TO TRUSS CONNECTIONS:

3 - HUS26
5 - HUS28

HUS26:
D01 TO C03
D02 TO C03
D03 TO C03

HUS28:
D12 TO G02
D13 TO G02
D14 TO G02
D15 TO G02
D16 TO G02

Roof Plane Sheathing Area = 2859 sq. ft
Gable Sheathing Area = 155 sq. ft
Total Sheathing Area = 3014 sq. ft
Fascia Material = 231 linear ft
Valley Flashing Material = 78 linear ft
Ridge Cap Material = 78 linear ft
Hip Ridge Material = 106 linear ft

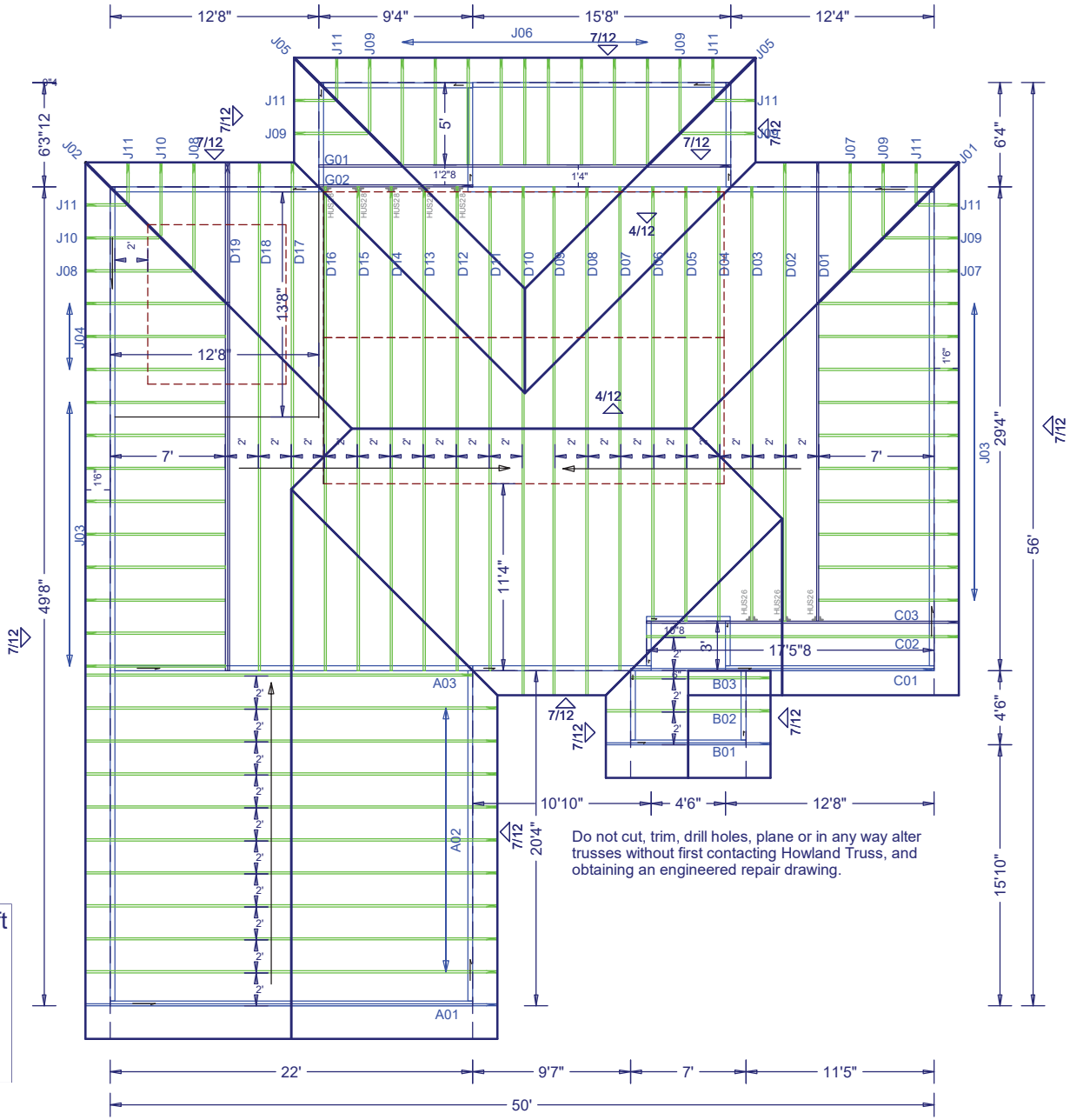

Do not cut, trim, drill holes, plane or in any way alter trusses without first contacting Howland Truss, and obtaining an engineered repair drawing.

JOB #: 23-8926

Job Name: Sunset 7
Customer: BRADLEY FRANKS
Designer: Chris
ADDRESS: 143 NW Germium Ct
SALESMAN: DB
: <Not Found>

JOB NO:
23-8926

PAGE NO:
1 OF 1

This document has been electronically signed using a Digital Signature. Printed copies without an original signature must be verified using the original electronic version.

WILLIAM H. KRICK
LICENSE
No. 70861
STATE OF
FLORIDA
PROFESSIONAL ENGINEER

ALPINE
AN ITW COMPANY

COA #0 278

Florida Certificate of Product Approval #FL 1999
02/10/2023

Alpine, an ITW Company
155 Harlem Ave
North Building, 4th Floor
Glenview, IL 60025
Phone: (800)755-6001
www.alpineitw.com

Columbia County Building Department
Plans Reviewed for Code Compliance
State of Florida

Site Information:	Page 1:
Customer: W. B. Howland Company, Inc.	*Job Number:* 23-8926
Job Description: Sunset 7	
Address: 143 NW Germium Ct, Lake City, FL 32055	

Job Engineering Criteria:	
Design Code: FBC 7th Ed. 2020 Res.	*IntelliVIEW Version:* 21.01.01A through 21.02.01 *JRef #:* 1XN32150003
Wind Standard: ASCE 7-16 *Wind Speed (mph):* 130 *Building Type:* Closed	*Design Loading (psf):* 40.00

This package contains general notes pages, 41 truss drawing(s) and 6 detail(s).

Item	Drawing Number	Truss	Item	Drawing Number	Truss
1	041.23.0913.09137	A01	2	041.23.0912.21088	A02
3	041.23.0912.19222	A03	4	041.23.0913.12993	B01
5	041.23.0912.21341	B02	6	041.23.0912.20768	B03
7	041.23.0912.21648	C01	8	041.23.0912.22217	C02
9	041.23.0912.20297	C03	10	041.23.0912.22043	D01
11	041.23.0912.21281	D02	12	041.23.0912.19322	D03
13	041.23.0912.19924	D04	14	041.23.0912.19333	D05
15	041.23.0912.20682	D06	16	041.23.0912.22420	D07
17	041.23.0912.20164	D08	18	041.23.0912.20625	D09
19	041.23.0912.19446	D10	20	041.23.0912.22028	D11
21	041.23.0912.20380	D12	22	041.23.0912.19088	D13
23	041.23.0912.19498	D14	24	041.23.0912.20654	D15
25	041.23.0912.21666	D16	26	041.23.0912.20046	D17
27	041.23.0912.22164	D18	28	041.23.0912.21350	D19
29	041.23.0912.19090	G01	30	041.23.0912.20396	G02
31	041.23.0912.19176	J01	32	041.23.0912.21795	J02
33	041.23.0912.20622	J03	34	041.23.0912.20964	J04
35	041.23.0912.20107	J05	36	041.23.0912.22298	J06
37	041.23.0912.21529	J07	38	041.23.0912.20824	J08
39	041.23.0912.21512	J09	40	041.23.0912.22465	J10
41	041.23.0912.21614	J11	42	A14015ENC160118	
43	BRCLBSUB0119		44	CNNAILSP1014	
45	DEFLCAMB1014		46	GBLLETIN0118	
47	S14015ENC160118				

General Notes

Truss Design Engineer Scope of Work, Design Assumptions and Design Responsibilities:
The design responsibilities assumed in the preparation of these design drawings are those specified in ANSI/TPI 1, Chapter 2; and the National Design Standard for Metal Plate Connected Wood Truss Construction, by the Truss Plate Institute. The truss component designs conform to the applicable provisions of ANSI/TPI 1 and NDS, the National Design Specification for Wood Construction by AWC. The truss component designs are based on the specified loading and dimension information furnished by others to the Truss Design Engineer. The Truss Design Engineer has no duty to independently verify the accuracy or completeness of the information provided by others and may rely on that information without liability. The responsibility for verification of that information remains with others neither employed nor controlled by the Truss Design Engineer. The Truss Design Engineer's seal and signature on the attached drawings, or cover page listing these drawings, indicates acceptance of professional engineering responsibility solely for the truss component designs and not for the technical information furnished by others which technical information and consequences thereof remain their sole responsibility.

The suitability and use of these drawings for any particular structure is the responsibility of the Building Designer in accordance with ANSI/TPI 1 Chapter 2. The Building Designer is responsible for determining that the dimensions and loads for each truss component match those required by the plans and by the actual use of the individual component, and for ascertaining that the loads shown on the drawings meet or exceed applicable building code requirements and any additional factors required in the particular application. Truss components using metal connector plates with integral teeth shall not be placed in environments that will cause the moisture content of the wood in which plates are embedded to exceed 19% and/or cause corrosion of connector plates and other metal fasteners.

The Truss Design Engineer shall not be responsible for items beyond the specific scope of the agreed contracted work set forth herein, including but not limited to: verifying the dimensions of the truss component, calculation of any of the truss component design loads, inspection of the truss components before or after installation, the design of temporary or permanent bracing and their attachment required in the roof and/or floor systems, the design of diaphragms or shear walls, the design of load transfer connections to and from diaphragms and shear walls, the design of load transfer to the foundation, the design of connections for truss components to their bearing supports, the design of the bearing supports, installation of the truss components, observation of the truss component installation process, review of truss assembly procedures, sequencing of the truss component installation, construction means and methods, site and/or worker safety in the installation of the truss components and/or its connections.

This document may be a high quality facsimile of the original engineering document which is a digitally signed electronic file with third party authentication. A wet or embossed seal copy of this engineering document is available upon request.

Temporary Lateral Restraint and Bracing:
Temporary lateral restraint and diagonal bracing shall be installed according to the provisions of BCSI chapters B1, B2, B7 and/or B10 (Building Component Safety Information, by TPI and SBCA), or as specified by the Building Designer or other Registered Design Professional. The required locations for lateral restraint and/or bracing depicted on these drawings are only for the permanent lateral support of the truss members to reduce buckling lengths, and do not apply to and may not be relied upon for the temporary stability of the truss components during their installation.

Permanent Lateral Restraint and Bracing:
The required locations for lateral restraint or bracing depicted on these drawings are for the permanent lateral support of the truss members to reduce buckling lengths. Permanent lateral support shall be installed according to the provisions of BCSI chapters B3, B7 and/or B10, or as specified by the Building Designer or other Registered Design Professional. These drawings do not depict or specify installation/erection bracing, wind bracing, portal bracing or similar building stability bracing which are parts of the overall building design to be specified, designed and detailed by the Building Designer.

Connector Plate Information:
Alpine connector plates are made of ASTM A653 or ASTM A1063 galvanized steel with the following designations, gauges and grades: W=Wave, 20ga, grade 40; H=High Strength, 20ga, grade 60; S=Super Strength, 18ga, grade 60. Information on model code compliance is contained in the ICC Evaluation Service report ESR-1118, available on-line at www.icc-es.org.

Fire Retardant Treated Lumber:
Fire retardant treated lumber must be properly re-dried and maintained below 19% or less moisture level through all stages of construction and usage. Fire retardant treated lumber may be more brittle than untreated lumber. Special handling care must be taken to prevent breakage during all handling activities.

General Notes (continued)

Key to Terms:
Information provided on drawings reflects a summary of the pertinent information required for the truss design. Detailed information on load cases, reactions, member lengths, forces and members requiring permanent lateral support may be found in calculation sheets available upon written request.

BCDL = Bottom Chord standard design Dead Load in pounds per square foot.
BCLL = Bottom Chord standard design Live Load in pounds per square foot.
CL = Certified lumber.
Des Ld = total of TCLL, TCDL, BCLL and BCDL Design Load in pounds per square foot.
FRT = Fire Retardant Treated lumber.
FRT-DB = D-Blaze Fire Retardant Treated lumber.
FRT-DC = Dricon Fire Retardant Treated lumber.
FRT-FP = FirePRO Fire Retardant Treated lumber.
FRT-FL = FlamePRO Fire Retardant Treated lumber.
FRT-FT = FlameTech Fire Retardant Treated lumber.
FRT-PG = PYRO-GUARD Fire Retardant Treated lumber.
g = green lumber.
HORZ(LL) = maximum Horizontal panel point deflection due to Live Load, in inches.
HORZ(TL) = maximum Horizontal panel point long term deflection in inches, due to Total Load, including creep adjustment.
HPL = additional Horizontal Load added to a truss Piece in pounds per linear foot or pounds.
Ic = Incised lumber.
FJ = Finger Jointed lumber.
L/# = user specified divisor for limiting span/deflection ratio for evaluation of actual L/defl value.
L/defl = ratio of Length between bearings, in inches, divided by the vertical Deflection due to creep, in inches, at the referenced panel point. Reported as 999 if greater than or equal to 999.
Loc = Location, starting location of left end of bearing or panel point (joint) location of deflection.
Max BC CSI = Maximum bending and axial Combined Stress Index for Bottom Chords for of all load cases.
Max TC CSI = Maximum bending and axial Combined Stress Index for Top Chords for of all load cases.
Max Web CSI= Maximum bending and axial Combined Stress Index for Webs for of all load cases.
NCBCLL = Non-Concurrent Bottom Chord design Live Load in pounds per square foot.
PL = additional Load applied at a user specified angle on a truss Piece in pounds per linear foot or pounds.
PLB = additional vertical load added to a Bottom chord Piece of a truss in pounds per linear foot or pounds
PLT = additional vertical load added to a Top chord Piece of a truss in pounds per linear foot or pounds.
PP = Panel Point.
R = maximum downward design Reaction, in pounds, from all specified gravity load cases, at the indicated location (Loc).
-R = maximum upward design Reaction, in pounds, from all specified gravity load cases, at the identified location (Loc).
Rh = maximum horizontal design Reaction in either direction, in pounds, from all specified gravity load cases, at the indicated location (Loc).
RL = maximum horizontal design Reaction in either direction, in pounds, from all specified non-gravity (wind or seismic) load cases, at the indicated location (Loc).
Rw = maximum downward design Reaction, in pounds, from all specified non-gravity (wind or seismic) load cases, at the identified location (Loc).
TCDL = Top Chord standard design Dead Load in pounds per square foot.
TCLL = Top Chord standard design Live Load in pounds per square foot.
U = maximum Upward design reaction, in pounds, from all specified non-gravity (wind or seismic) load cases, at the indicated location (Loc).
VERT(CL) = maximum Vertical panel point deflection in inches due to Live Load and Creep Component of Dead Load in inches.
VERT(CTL) = maximum Vertical panel point deflection ratios due to Live Load and Creep Component of Dead Load, and maximum long term Vertical panel point deflection in inches due to Total load, including creep adjustment.
VERT(LL) = maximum Vertical panel point deflection in inches due to Live Load.
VERT(TL) = maximum Vertical panel point long term deflection in inches due to Total load, including creep adjustment.
W = Width of non-hanger bearing, in inches.

Refer to ASCE-7 for Wind and Seismic abbreviations.
Uppercase Acronyms not explained above are as defined in TPI 1.

References:

1. AWC: American Wood Council; 222 Catoctin Circle SE, Suite 201; Leesburg, VA 20175; www.awc.org.
2. ICC: International Code Council; www.iccsafe.org.
3. Alpine, a division of ITW Building Components Group Inc.: 155 Harlem Ave, North Building, 4th Floor, Glenview, IL 60025; www.alpineitw.com.
4. TPI: Truss Plate Institute, 2670 Crain Highway, Suite 203, Waldorf, MD 20601; www.tpinst.org.
5. SBCA: Wood Truss Council of America, 6300 Enterprise Lane, Madison, WI 53719; www. sbcacomponents.com.

SEQN: 450705 GABL FROM: CDM	Ply: 1 Qty: 1	**Job Number:** 23-8926 Sunset 7 **Truss Label:** A01	Cust: R 215 JRef:1XN32150003 T16 DrwNo: 041.23.0913.09137 SSB / WHK 02/10/2023

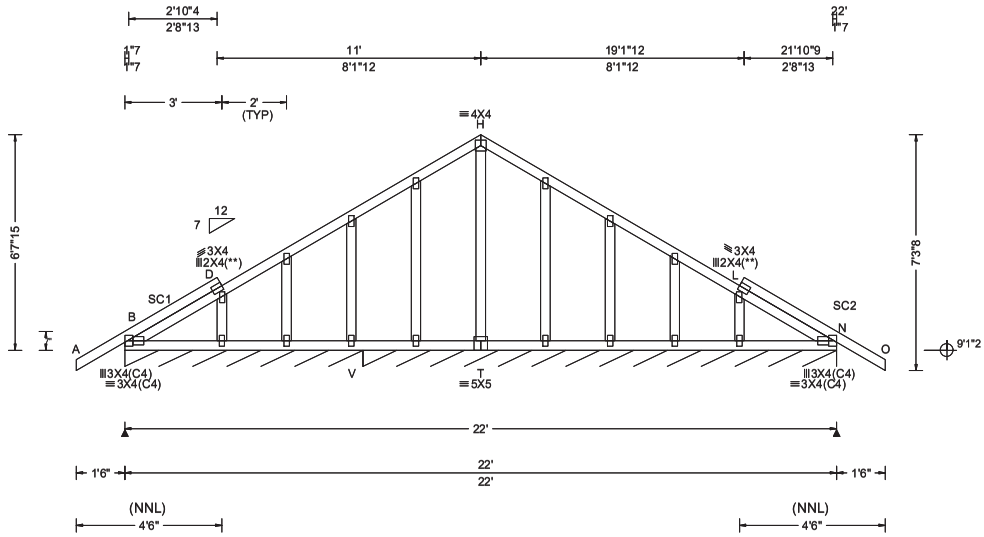

Loading Criteria (psf)

TCLL: 20.00
TCDL: 10.00
BCLL: 0.00
BCDL: 10.00
Des Ld: 40.00
NCBCLL: 10.00
Soffit: 2.00
Load Duration: 1.25
Spacing: 24.0 "

Wind Criteria

Wind Std: ASCE 7-16
Speed: 130 mph
Enclosure: Closed
Risk Category: II
EXP: C Kzt: NA
Mean Height: 15.00 ft
TCDL: 5.0 psf
BCDL: 5.0 psf
MWFRS Parallel Dist: 0 to h/2
C&C Dist a: 3.00 ft
Loc. from endwall: Any
GCpi: 0.18
Wind Duration: 1.60

Snow Criteria (Pg,Pf in PSF)

Pg: NA Ct: NA CAT: NA
Pf: NA Ce: NA
Lu: NA Cs: NA
Snow Duration: NA

Building Code:
FBC 7th Ed. 2020 Res.
TPI Std: 2014
Rep Fac: No
FT/RT:20(0)/10(0)
Plate Type(s):
WAVE

Defl/CSI Criteria

PP Deflection in	loc	L/defl	L/#
VERT(LL): 0.001	B	999	240
VERT(CL): 0.002	B	999	180
HORZ(LL): 0.002	K	-	-
HORZ(TL): 0.003	K	-	-

Creep Factor: 2.0
Max TC CSI: 0.207
Max BC CSI: 0.031
Max Web CSI: 0.087

VIEW Ver: 21.02.01.1214.12

▲Maximum Reactions (lbs), or *=PLF

	Gravity			Non-Gravity		
Loc	R+	/ R-	/ Rh	/ Rw	/ U	/ RL
B*	103	/-	/-	/67	/23	/28
V*	87	/-	/-	/52	/12	/-

Wind reactions based on MWFRS
B Brg Wid = 88.3 Min Req = -
V Brg Wid = 175 Min Req = -
Bearings B & V are a rigid surface.
Members not listed have forces less than 375#

Lumber

Top chord: 2x4 SP M-31;
Bot chord: 2x4 SP M-31;
Webs: 2x4 SP #3;
Stack Chord: SC1 2x4 SP #2;
Stack Chord: SC2 2x4 SP #2;

Plating Notes

All plates are 2X4 except as noted.

(**) 2 plate(s) require special positioning. Refer to scaled plate plot details for special positioning requirements.

Purlins

In lieu of structural panels use purlins to brace TC @ 24" oc.

Wind

Wind loads based on MWFRS with additional C&C member design.

Wind loading based on both gable and hip roof types.

Additional Notes

See DWGS A14015ENC160118 & GBLLETIN0118 for gable wind bracing and other requirements.

Stacked top chord must NOT be notched or cut in area (NNL). Dropped top chord braced at 24" oc intervals. Attach stacked top chord (SC) to dropped top chord in notchable area using 3x4 tie-plates 24" oc. Center plate on stacked/dropped chord interface, plate length perpendicular to chord length. Splice top chord in notchable area using 3x6.

The overall height of this truss excluding overhang is 6-7-15.

WILLIAM H. KRICK
LICENSE
No. 70861
STATE OF FLORIDA
PROFESSIONAL ENGINEER

COA #0278

02/10/2023

Florida Certificate of Product Approval #FL 1999

****WARNING**** READ AND FOLLOW ALL NOTES ON THIS DRAWING!
****IMPORTANT**** FURNISH THIS DRAWING TO ALL CONTRACTORS INCLUDING THE INSTALLERS

Trusses require extreme care in fabricating, handling, shipping, installing and bracing. Refer to and follow the latest edition of BCSI (Building Component Safety Information, by TPI and SBCA) for safety practices prior to performing these functions. Installers shall provide temporary bracing per BCSI. Unless noted otherwise, top chord shall have properly attached structural sheathing and bottom chord shall have a properly attached rigid ceiling. Locations shown for permanent lateral restraint of webs shall have bracing installed per BCSI sections B3, B7, or B10, as applicable. Apply plates to each face of truss and position as shown above and on the Joint Details, unless noted otherwise. Refer to drawings 160A-Z for standard plate positions. Refer to job's General Notes page for additional information.

Alpine, a division of ITW Building Components Group Inc. shall not be responsible for any deviation from this drawing, any failure to build the truss in conformance with ANSI/TPI 1, or for handling, shipping, installation and bracing of trusses. A seal on this drawing or cover page listing this drawing, indicates acceptance of professional engineering responsibility solely for the design shown. The suitability and use of this drawing for any structure is the responsibility of the Building Designer per ANSI/TPI 1 Sec.2.

For more information see these web sites: Alpine: alpineitw.com; TPI: tpinst.org; SBCA: sbcacomponents.com; ICC: iccsafe.org; AWC: awc.org

ALPINE
AN ITW COMPANY
155 Harlem Ave
North Building, 4th Floor
Glenview, IL 60025

SEQN: 409466 / COMN FROM: CDM	Ply: 1 Qty: 9	**Job Number:** 23-8926 Sunset 7 **Truss Label:** A02	Cust: R 215 JRef:1XN32150003 T29 DrwNo: 041.23.0912.21088 / WHK 02/10/2023

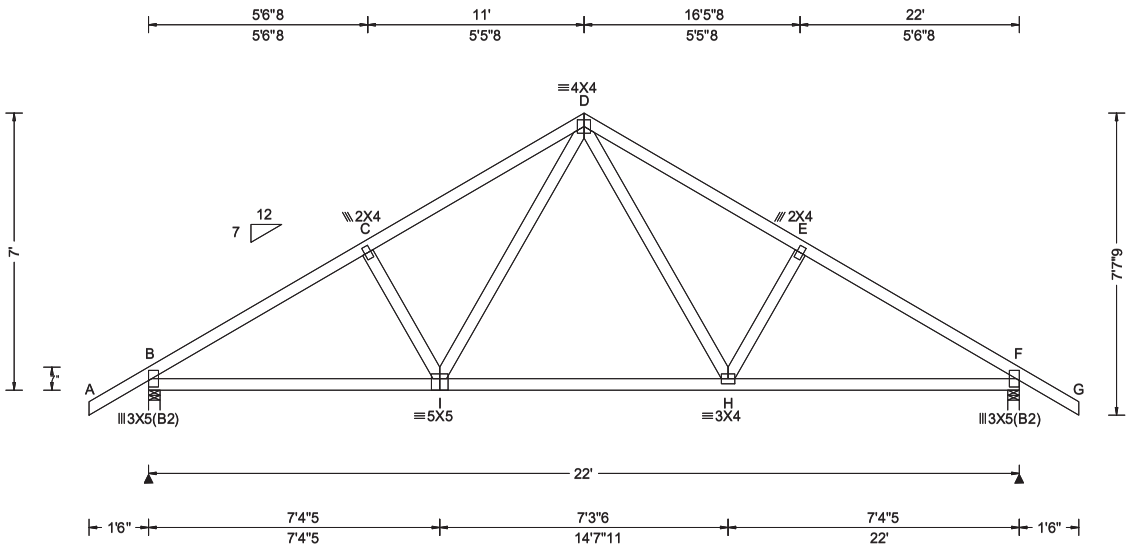

Loading Criteria (psf)	**Wind Criteria**	**Snow Criteria** (Pg,Pf in PSF)	**Defl/CSI Criteria**
TCLL: 20.00 TCDL: 10.00 BCLL: 0.00 BCDL: 10.00 Des Ld: 40.00 NCBCLL: 10.00 Soffit: 2.00 Load Duration: 1.25 Spacing: 24.0 "	Wind Std: ASCE 7-16 Speed: 130 mph Enclosure: Closed Risk Category: II EXP: C Kzt: NA Mean Height: 15.00 ft TCDL: 5.0 psf BCDL: 5.0 psf MWFRS Parallel Dist: 0 to h/2 C&C Dist a: 3.00 ft Loc. from endwall: Any GCpi: 0.18 Wind Duration: 1.60	Pg: NA Ct: NA CAT: NA Pf: NA Ce: NA Lu: NA Cs: NA Snow Duration: NA Building Code: FBC 7th Ed. 2020 Res. TPI Std: 2014 Rep Fac: Yes FT/RT:20(0)/10(0) Plate Type(s): WAVE	PP Deflection in loc L/defl L/# VERT(LL): 0.047 H 999 240 VERT(CL): 0.090 H 999 180 HORZ(LL): 0.024 F - - HORZ(TL): 0.047 F - - Creep Factor: 2.0 Max TC CSI: 0.207 Max BC CSI: 0.251 Max Web CSI: 0.094 VIEW Ver: 21.01.01A.0521.20

▲Maximum Reactions (lbs)

	Gravity			Non-Gravity		
Loc	R+	/ R-	/ Rh	/ Rw	/ U	/ RL
B	1075	/-	/-	/610	/175	/210
F	1075	/-	/-	/610	/175	/-

Wind reactions based on MWFRS
B Brg Wid = 3.5 Min Req = 1.5
F Brg Wid = 3.5 Min Req = 1.5
Bearings B & F are a rigid surface.
Members not listed have forces less than 375#

Maximum Top Chord Forces Per Ply (lbs)

Chords	Tens.	Comp.	Chords	Tens.	Comp.
B - C	450	- 1473	D - E	488	- 1309
C - D	489	- 1308	E - F	449	- 1475

Maximum Bot Chord Forces Per Ply (lbs)

Chords	Tens.	Comp.	Chords	Tens.	Comp.
B - I	1185	- 247	H - F	1186	- 259
I - H	822	- 62			

Maximum Web Forces Per Ply (lbs)

Webs	Tens.	Comp.	Webs	Tens.	Comp.
I - D	492	- 160	D - H	494	- 159

Lumber

Top chord: 2x4 SP M-31;
Bot chord: 2x4 SP M-31;
Webs: 2x4 SP M-31;

Loading

Truss passed check for 20 psf additional bottom chord live load in areas with 42"-high x 24"-wide clearance.

Wind

Wind loads based on MWFRS with additional C&C member design.

Wind loading based on both gable and hip roof types.

WILLIAM H. KRICK
LICENSE
No. 70861
STATE OF FLORIDA
PROFESSIONAL ENGINEER

COA #0278

02/10/2023

Florida Certificate of Product Approval #FL 1999

****WARNING**** READ AND FOLLOW ALL NOTES ON THIS DRAWING!
****IMPORTANT**** FURNISH THIS DRAWING TO ALL CONTRACTORS INCLUDING THE INSTALLERS

Trusses require extreme care in fabricating, handling, shipping, installing and bracing. Refer to and follow the latest edition of BCSI (Building Component Safety Information, by TPI and SBCA) for safety practices prior to performing these functions. Installers shall provide temporary bracing per BCSI. Unless noted otherwise, top chord shall have properly attached structural sheathing and bottom chord shall have a properly attached rigid ceiling. Locations shown for permanent lateral restraint of webs shall have bracing installed per BCSI sections B3, B7, or B10, as applicable. Apply plates to each face of truss and position as shown above and on the Joint Details, unless noted otherwise. Refer to drawings 160A-Z for standard plate positions. Refer to job's General Notes page for additional information.

Alpine, a division of ITW Building Components Group Inc. shall not be responsible for any deviation from this drawing, any failure to build the truss in conformance with ANSI/TPI 1, or for handling, shipping, installation and bracing of trusses. A seal on this drawing or cover page listing this drawing, indicates acceptance of professional engineering responsibility solely for the design shown. The suitability and use of this drawing for any structure is the responsibility of the Building Designer per ANSI/TPI 1 Sec.2.

For more information see these web sites: Alpine: alpineitw.com; TPI: tpinst.org; SBCA: sbcacomponents.com; ICC: iccsafe.org; AWC: awc.org

ALPINE AN ITW COMPANY
6750 Forum Drive
Suite 305
Orlando FL, 32821

SEQN: 409467 / COMN FROM: CDM	Ply: 1 Qty: 1	**Job Number:** 23-8926 Sunset 7 **Truss Label:** A03	Cust: R 215 JRef:1XN32150003 T31 DrwNo: 041.23.0912.19222 / WHK 02/10/2023

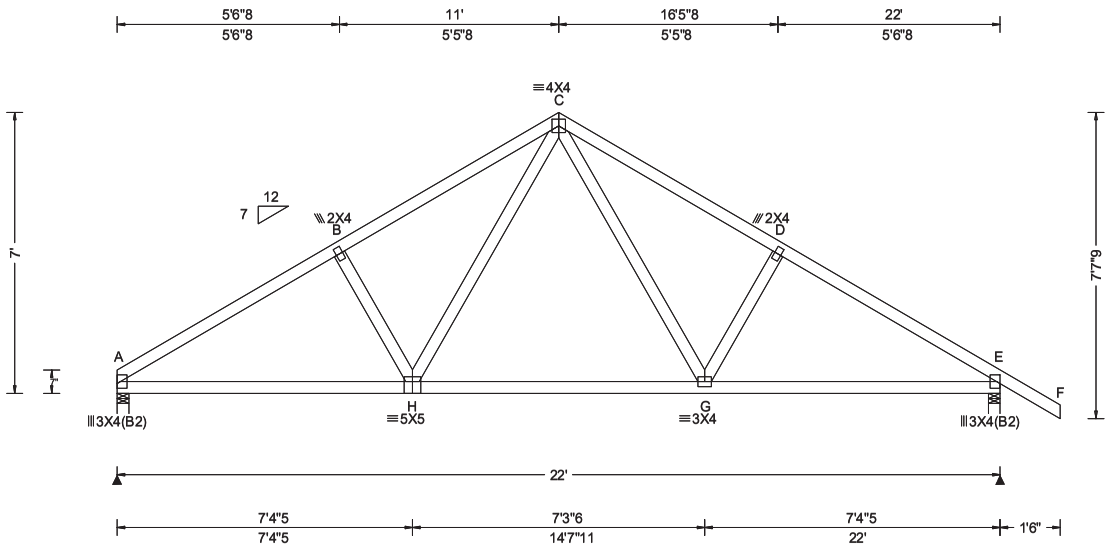

Loading Criteria (psf)

TCLL:	20.00
TCDL:	10.00
BCLL:	0.00
BCDL:	10.00
Des Ld:	40.00
NCBCLL:	10.00
Soffit:	2.00

Load Duration: 1.25
Spacing: 24.0 "

Wind Criteria
Wind Std: ASCE 7-16
Speed: 130 mph
Enclosure: Closed
Risk Category: II
EXP: C Kzt: NA
Mean Height: 15.00 ft
TCDL: 5.0 psf
BCDL: 5.0 psf
MWFRS Parallel Dist: h to 2h
C&C Dist a: 3.00 ft
Loc. from endwall: not in 9.00 ft
GCpi: 0.18
Wind Duration: 1.60

Snow Criteria (Pg,Pf in PSF)
Pg: NA Ct: NA CAT: NA
Pf: NA Ce: NA
Lu: NA Cs: NA
Snow Duration: NA

Building Code:
FBC 7th Ed. 2020 Res.
TPI Std: 2014
Rep Fac: Yes
FT/RT:20(0)/10(0)
Plate Type(s):
WAVE

Defl/CSI Criteria

PP Deflection in	loc	L/defl	L/#
VERT(LL): 0.038	G	999	240
VERT(CL): 0.077	G	999	180
HORZ(LL): 0.019	E	-	-
HORZ(TL): 0.039	E	-	-

Creep Factor: 2.0
Max TC CSI: 0.187
Max BC CSI: 0.210
Max Web CSI: 0.059

VIEW Ver: 21.01.01A.0521.20

▲Maximum Reactions (lbs)

	Gravity			Non-Gravity		
Loc	R+	/ R-	/ Rh	/ Rw	/ U	/ RL
A	911	/-	/-	/524	/10	/193
E	1020	/-	/-	/610	/17	/-

Wind reactions based on MWFRS
A Brg Wid = 3.5 Min Req = 1.5
E Brg Wid = 3.5 Min Req = 1.5
Bearings A & E are a rigid surface.
Members not listed have forces less than 375#

Maximum Top Chord Forces Per Ply (lbs)

Chords	Tens.	Comp.	Chords	Tens.	Comp.
A - B	281	- 1371	C - D	312	- 1194
B - C	318	- 1206	D - E	275	- 1359

Maximum Bot Chord Forces Per Ply (lbs)

Chords	Tens.	Comp.	Chords	Tens.	Comp.
A - H	1105	- 142	G - E	1090	- 135
H - G	754	- 4			

Maximum Web Forces Per Ply (lbs)

Webs	Tens.	Comp.	Webs	Tens.	Comp.
H - C	444	- 100	C - G	428	- 90

Lumber

Top chord: 2x4 SP M-31;
Bot chord: 2x4 SP M-31;
Webs: 2x4 SP M-31;

Wind

Wind loads based on MWFRS with additional C&C member design.

Wind loading based on both gable and hip roof types.

WILLIAM H. KRICK
LICENSE
No. 70861
STATE OF FLORIDA
PROFESSIONAL ENGINEER

COA #0278
02/10/2023
Florida Certificate of Product Approval #FL 1999

****WARNING**** READ AND FOLLOW ALL NOTES ON THIS DRAWING!
****IMPORTANT**** FURNISH THIS DRAWING TO ALL CONTRACTORS INCLUDING THE INSTALLERS

Trusses require extreme care in fabricating, handling, shipping, installing and bracing. Refer to and follow the latest edition of BCSI (Building Component Safety Information, by TPI and SBCA) for safety practices prior to performing these functions. Installers shall provide temporary bracing per BCSI. Unless noted otherwise, top chord shall have properly attached structural sheathing and bottom chord shall have a properly attached rigid ceiling. Locations shown for permanent lateral restraint of webs shall have bracing installed per BCSI sections B3, B7, or B10, as applicable. Apply plates to each face of truss and position as shown above and on the Joint Details, unless noted otherwise. Refer to drawings 160A-Z for standard plate positions. Refer to job's General Notes page for additional information.

Alpine, a division of ITW Building Components Group Inc. shall not be responsible for any deviation from this drawing, any failure to build the truss in conformance with ANSI/TPI 1, or for handling, shipping, installation and bracing of trusses. A seal on this drawing or cover page listing this drawing, indicates acceptance of professional engineering responsibility solely for the design shown. The suitability and use of this drawing for any structure is the responsibility of the Building Designer per ANSI/TPI 1 Sec.2.

For more information see these web sites: Alpine: alpineitw.com; TPI: tpinst.org; SBCA: sbcacomponents.com; ICC: iccsafe.org; AWC: awc.org

ALPINE
AN ITW COMPANY
6750 Forum Drive
Suite 305
Orlando FL, 32821

SEQN: 450701 GABL FROM: CDM	Ply: 1 Qty: 1	**Job Number:** 23-8926 Sunset 7 **Truss Label:** B01	Cust: R 215 JRef:1XN32150003 T20 DrwNo: 041.23.0913.12993 SSB / WHK 02/10/2023

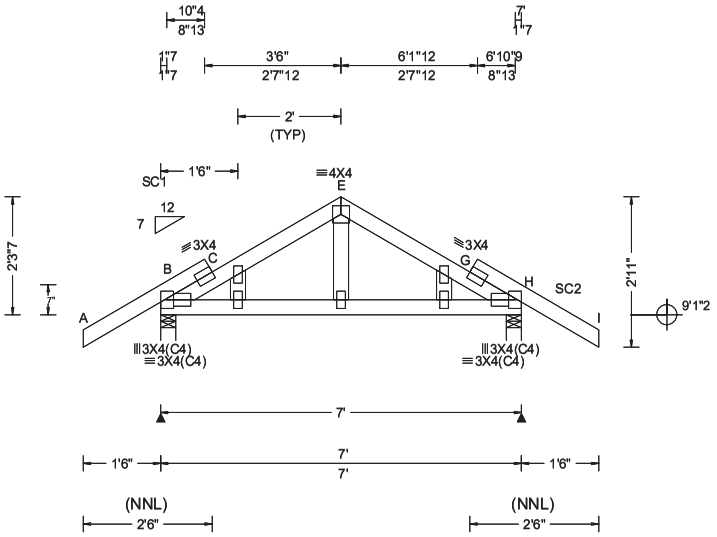

Loading Criteria (psf)	**Wind Criteria**	**Snow Criteria** (Pg,Pf in PSF)	**Defl/CSI Criteria**
TCLL: 20.00 TCDL: 10.00 BCLL: 0.00 BCDL: 10.00 Des Ld: 40.00 NCBCLL: 10.00 Soffit: 2.00 Load Duration: 1.25 Spacing: 24.0 "	Wind Std: ASCE 7-16 Speed: 130 mph Enclosure: Closed Risk Category: II EXP: C Kzt: NA Mean Height: 15.00 ft TCDL: 5.0 psf BCDL: 5.0 psf MWFRS Parallel Dist: 0 to h/2 C&C Dist a: 3.00 ft Loc. from endwall: Any GCpi: 0.18 Wind Duration: 1.60	Pg: NA Ct: NA CAT: NA Pf: NA Ce: NA Lu: NA Cs: NA Snow Duration: NA Building Code: FBC 7th Ed. 2020 Res. TPI Std: 2014 Rep Fac: No FT/RT:20(0)/10(0) Plate Type(s): WAVE	PP Deflection in loc L/defl L/# VERT(LL): 0.003 J 999 240 VERT(CL): 0.006 J 999 180 HORZ(LL): 0.001 D - - HORZ(TL): 0.002 D - - Creep Factor: 2.0 Max TC CSI: 0.209 Max BC CSI: 0.048 Max Web CSI: 0.032 VIEW Ver: 21.02.01.1214.12

▲Maximum Reactions (lbs)

	Gravity			Non-Gravity		
Loc	R+	/ R-	/ Rh	/ Rw	/ U	/ RL
B	393	/-	/-	/256	/65	/93
H	393	/-	/-	/256	/65	/-

Wind reactions based on MWFRS
B Brg Wid = 3.5 Min Req = 1.5 (Truss)
H Brg Wid = 3.5 Min Req = 1.5 (Truss)
Bearings B & H are a rigid surface.
Members not listed have forces less than 375#

Maximum Top Chord Forces Per Ply (lbs)

Chords	Tens.	Comp.	Chords	Tens.	Comp.
B - C	167	- 545	G - H	122	- 510

Lumber

Top chord: 2x4 SP M-31;
Bot chord: 2x4 SP M-31;
Webs: 2x4 SP #3;
Stack Chord: SC1 2x4 SP #2;
Stack Chord: SC2 2x4 SP #2;

Plating Notes

All plates are 2X4 except as noted.

Loading

Gable end supports 8" max rake overhang. Top chord must not be cut or notched.

Purlins

In lieu of structural panels use purlins to brace TC @ 24" oc.

Wind

Wind loads based on MWFRS with additional C&C member design.

Wind loading based on both gable and hip roof types.

Additional Notes

See DWGS A14015ENC160118 & GBLLETIN0118 for gable wind bracing and other requirements.

Stacked top chord must NOT be notched or cut in area (NNL). Dropped top chord braced at 24" oc intervals. Attach stacked top chord (SC) to dropped top chord in notchable area using 3x4 tie-plates 24" oc. Center plate on stacked/dropped chord interface, plate length perpendicular to chord length. Splice top chord in notchable area using 3x6.

The overall height of this truss excluding overhang is 2-3-7.

WILLIAM H. KRICK
LICENSE
No. 70861
STATE OF
FLORIDA
PROFESSIONAL ENGINEER

COA #0278

02/10/2023

Florida Certificate of Product Approval #FL 1999

****WARNING**** READ AND FOLLOW ALL NOTES ON THIS DRAWING!
****IMPORTANT**** FURNISH THIS DRAWING TO ALL CONTRACTORS INCLUDING THE INSTALLERS

Trusses require extreme care in fabricating, handling, shipping, installing and bracing. Refer to and follow the latest edition of BCSI (Building Component Safety Information, by TPI and SBCA) for safety practices prior to performing these functions. Installers shall provide temporary bracing per BCSI. Unless noted otherwise, top chord shall have properly attached structural sheathing and bottom chord shall have a properly attached rigid ceiling. Locations shown for permanent lateral restraint of webs shall have bracing installed per BCSI sections B3, B7, or B10, as applicable. Apply plates to each face of truss and position as shown above and on the Joint Details, unless noted otherwise. Refer to drawings 160A-Z for standard plate positions. Refer to job's General Notes page for additional information.

Alpine, a division of ITW Building Components Group Inc. shall not be responsible for any deviation from this drawing, any failure to build the truss in conformance with ANSI/TPI 1, or for handling, shipping, installation and bracing of trusses. A seal on this drawing or cover page listing this drawing, indicates acceptance of professional engineering responsibility solely for the design shown. The suitability and use of this drawing for any structure is the responsibility of the Building Designer per ANSI/TPI 1 Sec.2.

For more information see these web sites: Alpine: alpineitw.com; TPI: tpinst.org; SBCA: sbcacomponents.com; ICC: iccsafe.org; AWC: awc.org

ALPINE
AN ITW COMPANY
155 Harlem Ave
North Building, 4th Floor
Glenview, IL 60025

SEQN: 409469 / COMN FROM: CDM	Ply: 1 Qty: 1	**Job Number:** 23-8926 Sunset 7 **Truss Label:** B02	Cust: R 215 JRef:1XN32150003 T54 / DrwNo: 041.23.0912.21341 / YK 02/10/2023

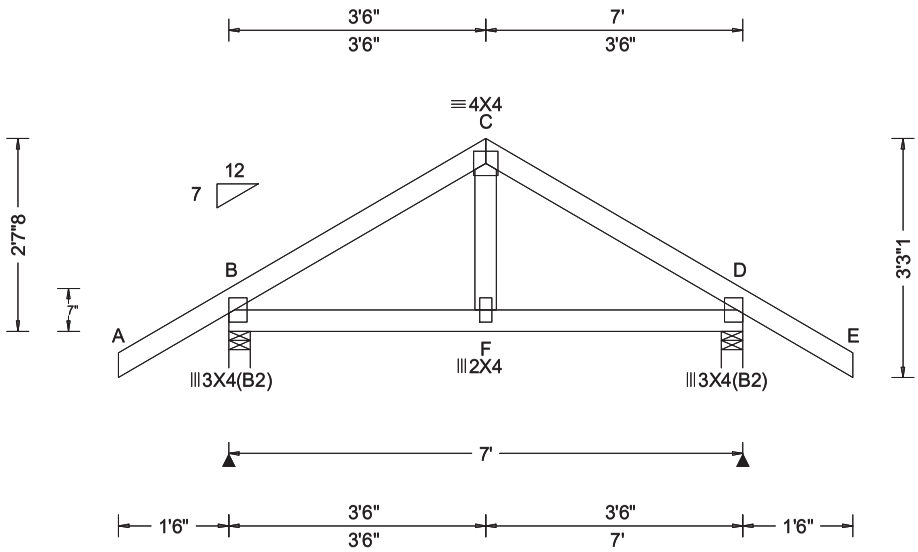

Loading Criteria (psf)	**Wind Criteria**	**Snow Criteria** (Pg,Pf in PSF)	**Defl/CSI Criteria**
TCLL: 20.00 TCDL: 10.00 BCLL: 0.00 BCDL: 10.00 Des Ld: 40.00 NCBCLL: 10.00 Soffit: 2.00 Load Duration: 1.25 Spacing: 24.0 "	Wind Std: ASCE 7-16 Speed: 130 mph Enclosure: Closed Risk Category: II EXP: C Kzt: NA Mean Height: 15.00 ft TCDL: 5.0 psf BCDL: 5.0 psf MWFRS Parallel Dist: 0 to h/2 C&C Dist a: 3.00 ft Loc. from endwall: Any GCpi: 0.18 Wind Duration: 1.60	Pg: NA Ct: NA CAT: NA Pf: NA Ce: NA Lu: NA Cs: NA Snow Duration: NA Building Code: FBC 7th Ed. 2020 Res. TPI Std: 2014 Rep Fac: Yes FT/RT:20(0)/10(0) Plate Type(s): WAVE	PP Deflection in loc L/defl L/# VERT(LL): 0.004 F 999 240 VERT(CL): 0.007 F 999 180 HORZ(LL): 0.002 D - - HORZ(TL): 0.004 D - - Creep Factor: 2.0 Max TC CSI: 0.087 Max BC CSI: 0.043 Max Web CSI: 0.013 VIEW Ver: 21.01.01A.0521.20

▲Maximum Reactions (lbs)

	Gravity			Non-Gravity		
Loc	R+	/ R-	/ Rh	/ Rw	/ U	/ RL
B	393	/-	/-	/258	/72	/97
D	393	/-	/-	/258	/72	/-

Wind reactions based on MWFRS
B Brg Wid = 3.5 Min Req = 1.5
D Brg Wid = 3.5 Min Req = 1.5
Bearings B & D are a rigid surface.
Members not listed have forces less than 375#

Lumber

Top chord: 2x4 SP M-31;
Bot chord: 2x4 SP M-31;
Webs: 2x4 SP M-31;

Wind

Wind loads based on MWFRS with additional C&C member design.

Wind loading based on both gable and hip roof types.

WILLIAM H. KRICK
LICENSE
No. 70861
STATE OF FLORIDA
PROFESSIONAL ENGINEER

COA #0278
02/10/2023
Florida Certificate of Product Approval #FL 1999

****WARNING**** READ AND FOLLOW ALL NOTES ON THIS DRAWING!
****IMPORTANT**** FURNISH THIS DRAWING TO ALL CONTRACTORS INCLUDING THE INSTALLERS

Trusses require extreme care in fabricating, handling, shipping, installing and bracing. Refer to and follow the latest edition of BCSI (Building Component Safety Information, by TPI and SBCA) for safety practices prior to performing these functions. Installers shall provide temporary bracing per BCSI. Unless noted otherwise, top chord shall have properly attached structural sheathing and bottom chord shall have a properly attached rigid ceiling. Locations shown for permanent lateral restraint of webs shall have bracing installed per BCSI sections B3, B7, or B10, as applicable. Apply plates to each face of truss and position as shown above and on the Joint Details, unless noted otherwise. Refer to drawings 160A-Z for standard plate positions. Refer to job's General Notes page for additional information.

Alpine, a division of ITW Building Components Group Inc. shall not be responsible for any deviation from this drawing, any failure to build the truss in conformance with ANSI/TPI 1, or for handling, shipping, installation and bracing of trusses. A seal on this drawing or cover page listing this drawing, indicates acceptance of professional engineering responsibility solely for the design shown. The suitability and use of this drawing for any structure is the responsibility of the Building Designer per ANSI/TPI 1 Sec.2.

For more information see these web sites: Alpine: alpineitw.com; TPI: tpinst.org; SBCA: sbcacomponents.com; ICC: iccsafe.org; AWC: awc.org

ALPINE AN ITW COMPANY
6750 Forum Drive
Suite 305
Orlando FL, 32821

SEQN: 409470 / COMN FROM: CDM	Ply: 1 Qty: 1	**Job Number:** 23-8926 Sunset 7 **Truss Label:** B03	Cust: R 215 JRef:1XN32150003 T1 / DrwNo: 041.23.0912.20768 / YK 02/10/2023

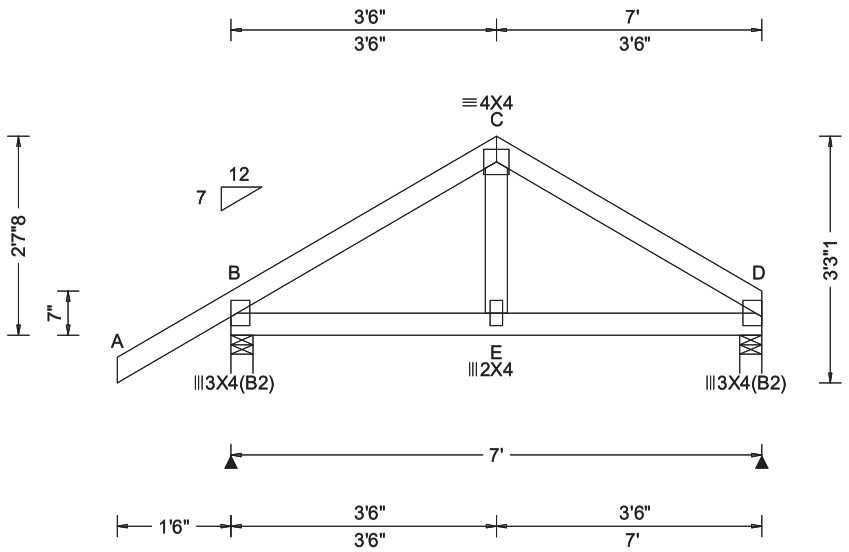

Loading Criteria (psf)

TCLL:	20.00
TCDL:	10.00
BCLL:	0.00
BCDL:	10.00
Des Ld:	40.00
NCBCLL:	10.00
Soffit:	2.00

Load Duration: 1.25
Spacing: 24.0 "

Wind Criteria
Wind Std: ASCE 7-16
Speed: 130 mph
Enclosure: Closed
Risk Category: II
EXP: C Kzt: NA
Mean Height: 15.00 ft
TCDL: 5.0 psf
BCDL: 5.0 psf
MWFRS Parallel Dist: 0 to h/2
C&C Dist a: 3.00 ft
Loc. from endwall: not in 4.50 ft
GCpi: 0.18
Wind Duration: 1.60

Snow Criteria (Pg,Pf in PSF)
Pg: NA Ct: NA CAT: NA
Pf: NA Ce: NA
Lu: NA Cs: NA
Snow Duration: NA

Building Code:
FBC 7th Ed. 2020 Res.
TPI Std: 2014
Rep Fac: Yes
FT/RT:20(0)/10(0)
Plate Type(s):
WAVE

Defl/CSI Criteria

PP Deflection in	loc	L/defl	L/#
VERT(LL): 0.003	E	999	240
VERT(CL): 0.006	E	999	180
HORZ(LL): 0.001	D	-	-
HORZ(TL): 0.003	D	-	-

Creep Factor: 2.0
Max TC CSI: 0.077
Max BC CSI: 0.048
Max Web CSI: 0.013

VIEW Ver: 21.01.01A.0521.20

▲Maximum Reactions (lbs)

	Gravity			Non-Gravity		
Loc	R+	/ R-	/ Rh	/ Rw	/ U	/ RL
B	404	/-	/-	/258	/75	/80
D	279	/-	/-	/165	/42	/-

Wind reactions based on MWFRS
B Brg Wid = 3.5 Min Req = 1.5
D Brg Wid = 3.5 Min Req = 1.5
Bearings B & D are a rigid surface.
Members not listed have forces less than 375#

Lumber

Top chord: 2x4 SP M-31;
Bot chord: 2x4 SP M-31;
Webs: 2x4 SP M-31;

Wind

Wind loads based on MWFRS with additional C&C member design.

Wind loading based on both gable and hip roof types.

COA #0278
02/10/2023
Florida Certificate of Product Approval #FL 1999

****WARNING**** READ AND FOLLOW ALL NOTES ON THIS DRAWING!
****IMPORTANT**** FURNISH THIS DRAWING TO ALL CONTRACTORS INCLUDING THE INSTALLERS

Trusses require extreme care in fabricating, handling, shipping, installing and bracing. Refer to and follow the latest edition of BCSI (Building Component Safety Information, by TPI and SBCA) for safety practices prior to performing these functions. Installers shall provide temporary bracing per BCSI. Unless noted otherwise, top chord shall have properly attached structural sheathing and bottom chord shall have a properly attached rigid ceiling. Locations shown for permanent lateral restraint of webs shall have bracing installed per BCSI sections B3, B7, or B10, as applicable. Apply plates to each face of truss and position as shown above and on the Joint Details, unless noted otherwise. Refer to drawings 160A-Z for standard plate positions. Refer to job's General Notes page for additional information.

Alpine, a division of ITW Building Components Group Inc. shall not be responsible for any deviation from this drawing, any failure to build the truss in conformance with ANSI/TPI 1, or for handling, shipping, installation and bracing of trusses. A seal on this drawing or cover page listing this drawing, indicates acceptance of professional engineering responsibility solely for the design shown. The suitability and use of this drawing for any structure is the responsibility of the Building Designer per ANSI/TPI 1 Sec.2.

For more information see these web sites: Alpine: alpineitw.com; TPI: tpinst.org; SBCA: sbcacomponents.com; ICC: iccsafe.org; AWC: awc.org

ALPINE AN ITW COMPANY
6750 Forum Drive
Suite 305
Orlando FL, 32821

SEQN: 409471 / GABL FROM: CDM	Ply: 1 Qty: 1	**Job Number:** 23-8926 Sunset 7 **Truss Label:** C01	Cust: R 215 JRef:1XN32150003 T3 / DrwNo: 041.23.0912.21648 / YK 02/10/2023

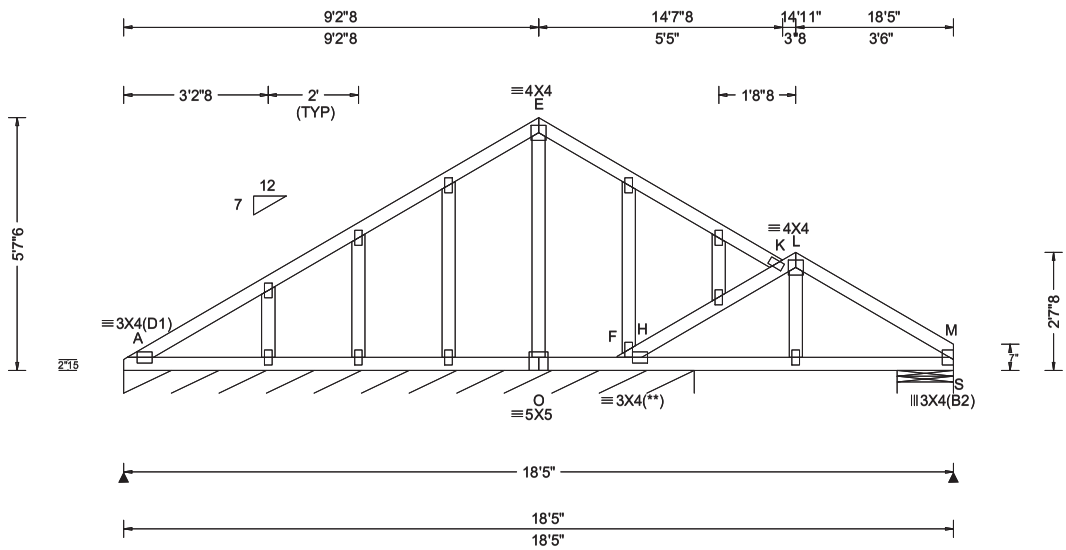

Loading Criteria (psf)

TCLL: 20.00
TCDL: 10.00
BCLL: 0.00
BCDL: 10.00
Des Ld: 40.00
NCBCLL: 10.00
Soffit: 2.00
Load Duration: 1.25
Spacing: 24.0 "

Wind Criteria

Wind Std: ASCE 7-16
Speed: 130 mph
Enclosure: Closed
Risk Category: II
EXP: C Kzt: NA
Mean Height: 15.00 ft
TCDL: 5.0 psf
BCDL: 5.0 psf
MWFRS Parallel Dist: 0 to h/2
C&C Dist a: 3.00 ft
Loc. from endwall: Any
GCpi: 0.18
Wind Duration: 1.60

Snow Criteria (Pg,Pf in PSF)

Pg: NA Ct: NA CAT: NA
Pf: NA Ce: NA
Lu: NA Cs: NA
Snow Duration: NA

Building Code:
FBC 7th Ed. 2020 Res.
TPI Std: 2014
Rep Fac: Yes
FT/RT:20(0)/10(0)
Plate Type(s):
WAVE

Defl/CSI Criteria

PP Deflection in	loc	L/defl	L/#
VERT(LL): 0.003	I	999	240
VERT(CL): 0.007	I	999	180
HORZ(LL): 0.002	J	-	-
HORZ(TL): 0.003	J	-	-

Creep Factor: 2.0
Max TC CSI: 0.047
Max BC CSI: 0.029
Max Web CSI: 0.042

VIEW Ver: 21.01.01A.0521.20

▲Maximum Reactions (lbs), or *=PLF

	Gravity			Non-Gravity		
Loc	R+	/ R-	/ Rh	/ Rw	/ U	/ RL
A*	99	/-	/-	/54	/16	/11
S	267	/-	/-	/162	/37	/-

Wind reactions based on MWFRS
A Brg Wid = 151 Min Req = -
S Brg Wid = 15.0 Min Req = 1.5
Bearings A & S are a rigid surface.
Members not listed have forces less than 375#

Maximum Top Chord Forces Per Ply (lbs)

Chords	Tens.	Comp.
F - K	337	- 383

Lumber

Top chord: 2x4 SP M-31;
Bot chord: 2x4 SP M-31;
Webs: 2x4 SP M-31;

Plating Notes

All plates are 2X4 except as noted.

(**) 1 plate(s) require special positioning. Refer to scaled plate plot details for special positioning requirements.

Loading

Gable end supports 8" max rake overhang. Top chord must not be cut or notched.

Wind

Wind loads based on MWFRS with additional C&C member design.

Wind loading based on both gable and hip roof types.

Additional Notes

See DWGS S14015ENC160118 & GBLLETIN0118 for gable wind bracing and other requirements.

WILLIAM H. KRICK
LICENSE
No. 70861
STATE OF
FLORIDA
PROFESSIONAL ENGINEER

COA #0278
02/10/2023
Florida Certificate of Product Approval #FL 1999

****WARNING**** READ AND FOLLOW ALL NOTES ON THIS DRAWING!
****IMPORTANT**** FURNISH THIS DRAWING TO ALL CONTRACTORS INCLUDING THE INSTALLERS

Trusses require extreme care in fabricating, handling, shipping, installing and bracing. Refer to and follow the latest edition of BCSI (Building Component Safety Information, by TPI and SBCA) for safety practices prior to performing these functions. Installers shall provide temporary bracing per BCSI. Unless noted otherwise, top chord shall have properly attached structural sheathing and bottom chord shall have a properly attached rigid ceiling. Locations shown for permanent lateral restraint of webs shall have bracing installed per BCSI sections B3, B7, or B10, as applicable. Apply plates to each face of truss and position as shown above and on the Joint Details, unless noted otherwise. Refer to drawings 160A-Z for standard plate positions. Refer to job's General Notes page for additional information.

Alpine, a division of ITW Building Components Group Inc. shall not be responsible for any deviation from this drawing, any failure to build the truss in conformance with ANSI/TPI 1, or for handling, shipping, installation and bracing of trusses. A seal on this drawing or cover page listing this drawing, indicates acceptance of professional engineering responsibility solely for the design shown. The suitability and use of this drawing for any structure is the responsibility of the Building Designer per ANSI/TPI 1 Sec.2.

For more information see these web sites: Alpine: alpineitw.com; TPI: tpinst.org; SBCA: sbcacomponents.com; ICC: iccsafe.org; AWC: awc.org

ALPINE
AN ITW COMPANY
6750 Forum Drive
Suite 305
Orlando FL, 32821

SEQN: 409472 / COMN FROM: CDM	Ply: 1 Qty: 1	**Job Number:** 23-8926 Sunset 7 **Truss Label:** C02	Cust: R 215 JRef:1XN32150003 T2 / DrwNo: 041.23.0912.22217 / YK 02/10/2023

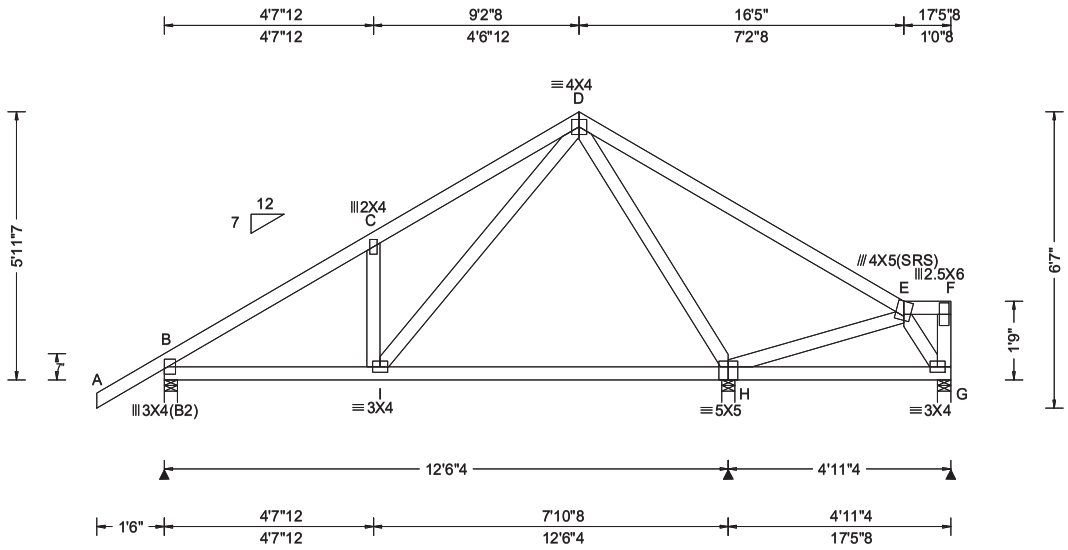

Loading Criteria (psf)

TCLL: 20.00
TCDL: 10.00
BCLL: 0.00
BCDL: 10.00
Des Ld: 40.00
NCBCLL: 10.00
Soffit: 2.00
Load Duration: 1.25
Spacing: 24.0 "

Wind Criteria

Wind Std: ASCE 7-16
Speed: 130 mph
Enclosure: Closed
Risk Category: II
EXP: C Kzt: NA
Mean Height: 15.00 ft
TCDL: 5.0 psf
BCDL: 5.0 psf
MWFRS Parallel Dist: 0 to h/2
C&C Dist a: 3.00 ft
Loc. from endwall: not in 4.50 ft
GCpi: 0.18
Wind Duration: 1.60

Snow Criteria (Pg,Pf in PSF)

Pg: NA Ct: NA CAT: NA
Pf: NA Ce: NA
Lu: NA Cs: NA
Snow Duration: NA

Building Code:
FBC 7th Ed. 2020 Res.
TPI Std: 2014
Rep Fac: Yes
FT/RT:20(0)/10(0)
Plate Type(s):
WAVE

Defl/CSI Criteria

PP Deflection in	loc	L/defl	L/#
VERT(LL): 0.012	C	999	240
VERT(CL): 0.025	C	999	180
HORZ(LL): 0.004	C	-	-
HORZ(TL): 0.007	C	-	-

Creep Factor: 2.0
Max TC CSI: 0.290
Max BC CSI: 0.148
Max Web CSI: 0.303

VIEW Ver: 21.01.01A.0521.20

▲Maximum Reactions (lbs)

	Gravity			Non-Gravity		
Loc	R+	/ R-	/ Rh	/ Rw	/ U	/ RL
B	575	/-	/-	/360	/104	/155
H	912	/-	/-	/521	/140	/-
G	123	/-35	/-	/51	/40	/-

Wind reactions based on MWFRS
B Brg Wid = 3.5 Min Req = 1.5
H Brg Wid = 3.5 Min Req = 1.5
G Brg Wid = 3.5 Min Req = 1.5
Bearings B, H, & G are a rigid surface.
Members not listed have forces less than 375#

Maximum Top Chord Forces Per Ply (lbs)

Chords	Tens.	Comp.	Chords	Tens.	Comp.
B - C	110	- 613	C - D	221	- 598

Maximum Bot Chord Forces Per Ply (lbs)

Chords	Tens.	Comp.
B - I	464	- 82

Maximum Web Forces Per Ply (lbs)

Webs	Tens.	Comp.	Webs	Tens.	Comp.
I - D	523	- 147	H - E	273	- 462
D - H	173	- 696			

Lumber

Top chord: 2x4 SP M-31;
Bot chord: 2x4 SP M-31;
Webs: 2x4 SP M-31;

Purlins

In lieu of structural panels use purlins to brace all flat TC @ 24" oc.

Wind

Wind loads based on MWFRS with additional C&C member design.

Right end vertical not exposed to wind pressure.

Wind loading based on both gable and hip roof types.

WILLIAM H. KRICK
LICENSE
No. 70861
STATE OF
FLORIDA
PROFESSIONAL ENGINEER

COA #0278
02/10/2023
Florida Certificate of Product Approval #FL 1999

****WARNING**** READ AND FOLLOW ALL NOTES ON THIS DRAWING!
****IMPORTANT**** FURNISH THIS DRAWING TO ALL CONTRACTORS INCLUDING THE INSTALLERS

Trusses require extreme care in fabricating, handling, shipping, installing and bracing. Refer to and follow the latest edition of BCSI (Building Component Safety Information, by TPI and SBCA) for safety practices prior to performing these functions. Installers shall provide temporary bracing per BCSI. Unless noted otherwise, top chord shall have properly attached structural sheathing and bottom chord shall have a properly attached rigid ceiling. Locations shown for permanent lateral restraint of webs shall have bracing installed per BCSI sections B3, B7, or B10, as applicable. Apply plates to each face of truss and position as shown above and on the Joint Details, unless noted otherwise. Refer to drawings 160A-Z for standard plate positions. Refer to job's General Notes page for additional information.

Alpine, a division of ITW Building Components Group Inc. shall not be responsible for any deviation from this drawing, any failure to build the truss in conformance with ANSI/TPI 1, or for handling, shipping, installation and bracing of trusses. A seal on this drawing or cover page listing this drawing, indicates acceptance of professional engineering responsibility solely for the design shown. The suitability and use of this drawing for any structure is the responsibility of the Building Designer per ANSI/TPI 1 Sec.2.

For more information see these web sites: Alpine: alpineitw.com; TPI: tpinst.org; SBCA: sbcacomponents.com; ICC: iccsafe.org; AWC: awc.org

ALPINE
AN ITW COMPANY
6750 Forum Drive
Suite 305
Orlando FL, 32821

SEQN: 409505 / COMN FROM: CDM	Ply: 1 Qty: 1	**Job Number:** 23-8926 Sunset 7 **Truss Label:** C03	Cust: R 215 JRef:1XN32150003 T4 / DrwNo: 041.23.0912.20297 / YK 02/10/2023

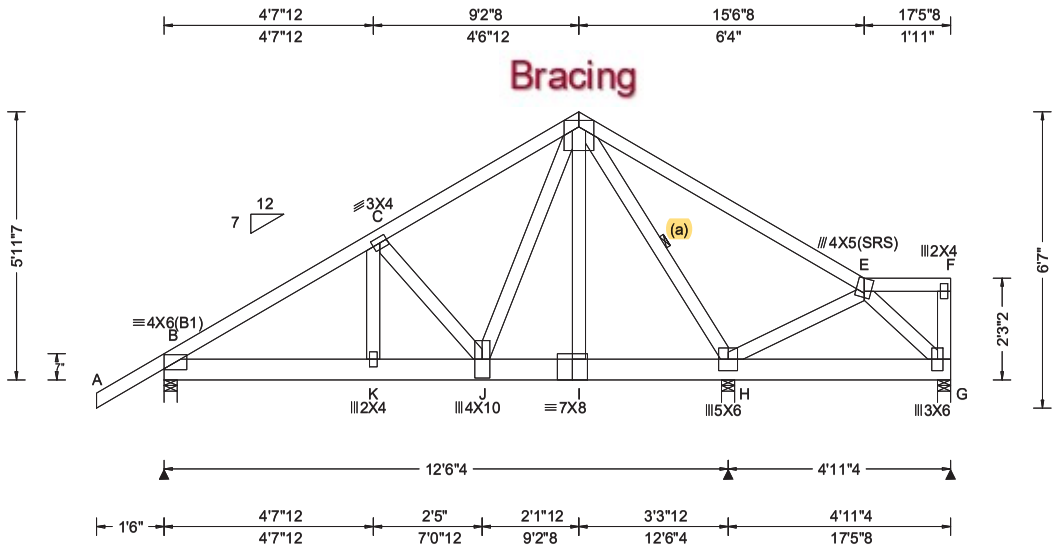

Loading Criteria (psf)	**Wind Criteria**	**Snow Criteria** (Pg,Pf in PSF)	**Defl/CSI Criteria**
TCLL: 20.00 TCDL: 10.00 BCLL: 0.00 BCDL: 10.00 Des Ld: 40.00 NCBCLL: 10.00 Soffit: 2.00 Load Duration: 1.25 Spacing: 24.0 "	Wind Std: ASCE 7-16 Speed: 130 mph Enclosure: Closed Risk Category: II EXP: C Kzt: NA Mean Height: 15.00 ft TCDL: 5.0 psf BCDL: 5.0 psf MWFRS Parallel Dist: 0 to h/2 C&C Dist a: 3.00 ft Loc. from endwall: not in 4.50 ft GCpi: 0.18 Wind Duration: 1.60	Pg: NA Ct: NA CAT: NA Pf: NA Ce: NA Lu: NA Cs: NA Snow Duration: NA Building Code: FBC 7th Ed. 2020 Res. TPI Std: 2014 Rep Fac: Varies by Ld Case FT/RT:20(0)/10(0) Plate Type(s): WAVE	PP Deflection in loc L/defl L/# VERT(LL): 0.042 J 999 240 VERT(CL): 0.085 J 999 180 HORZ(LL): 0.010 C - - HORZ(TL): 0.021 C - - Creep Factor: 2.0 Max TC CSI: 0.260 Max BC CSI: 0.330 Max Web CSI: 0.431 VIEW Ver: 21.01.01A.0521.20

▲Maximum Reactions (lbs)

	Gravity			Non-Gravity		
Loc	R+	/ R-	/ Rh	/ Rw	/ U	/ RL
B	1934	/-	/-	/-	/350	/-
H	4092	/-	/-	/-	/712	/-
G	98	/-203	/-	/13	/-	/-

Wind reactions based on MWFRS
B Brg Wid = 3.5 Min Req = 1.6
H Brg Wid = 3.5 Min Req = 3.0
G Brg Wid = 3.5 Min Req = 1.5
Bearings B, H, & G are a rigid surface.
Members not listed have forces less than 375#

Maximum Top Chord Forces Per Ply (lbs)

Chords	Tens.	Comp.	Chords	Tens.	Comp.
B - C	510	- 2913	D - E	473	- 102
C - D	498	- 2837			

Maximum Bot Chord Forces Per Ply (lbs)

Chords	Tens.	Comp.	Chords	Tens.	Comp.
B - K	2434	- 414	J - I	1455	- 260
K - J	2438	- 416	I - H	1455	- 260

Maximum Web Forces Per Ply (lbs)

Webs	Tens.	Comp.	Webs	Tens.	Comp.
J - D	2602	- 407	D - H	642	- 3534
D - I	1596	- 297	H - E	125	- 387

Lumber

Top chord: 2x4 SP M-31;
Bot chord: 2x6 SP 2400f-2.0E;
Webs: 2x4 SP M-31;

Bracing

(a) Continuous lateral restraint equally spaced on member.

Special Loads

------(Lumber Dur.Fac.=1.25 / Plate Dur.Fac.=1.25)

TC: From	63 plf at	-1.50 to	63 plf at	7.06
TC: From	32 plf at	7.06 to	32 plf at	11.06
TC: From	63 plf at	11.06 to	63 plf at	17.46
BC: From	5 plf at	-1.50 to	5 plf at	0.00
BC: From	20 plf at	0.00 to	20 plf at	7.06
BC: From	10 plf at	7.06 to	10 plf at	11.06
BC: From	20 plf at	11.06 to	20 plf at	17.46

BC: 2346 lb Conc. Load at 7.06
BC: 1090 lb Conc. Load at 9.06
BC: 1093 lb Conc. Load at 11.06

Purlins

In lieu of structural panels use purlins to brace all flat TC @ 24" oc.

Wind

Wind loads and reactions based on MWFRS.

Right end vertical not exposed to wind pressure.

Wind loading based on both gable and hip roof types.

Additional Notes

Negative reaction(s) of -203# MAX. from a non-wind load case requires uplift connection. See Maximum Reactions.

WILLIAM H. KRICK
LICENSE
No. 70861
STATE OF FLORIDA
PROFESSIONAL ENGINEER

COA #0278
02/10/2023
Florida Certificate of Product Approval #FL 1999

****WARNING**** READ AND FOLLOW ALL NOTES ON THIS DRAWING!
****IMPORTANT**** FURNISH THIS DRAWING TO ALL CONTRACTORS INCLUDING THE INSTALLERS

Trusses require extreme care in fabricating, handling, shipping, installing and bracing. Refer to and follow the latest edition of BCSI (Building Component Safety Information, by TPI and SBCA) for safety practices prior to performing these functions. Installers shall provide temporary bracing per BCSI. Unless noted otherwise, top chord shall have properly attached structural sheathing and bottom chord shall have a properly attached rigid ceiling. Locations shown for permanent lateral restraint of webs shall have bracing installed per BCSI sections B3, B7, or B10, as applicable. Apply plates to each face of truss and position as shown above and on the Joint Details, unless noted otherwise. Refer to drawings 160A-Z for standard plate positions. Refer to job's General Notes page for additional information.

Alpine, a division of ITW Building Components Group Inc. shall not be responsible for any deviation from this drawing, any failure to build the truss in conformance with ANSI/TPI 1, or for handling, shipping, installation and bracing of trusses. A seal on this drawing or cover page listing this drawing, indicates acceptance of professional engineering responsibility solely for the design shown. The suitability and use of this drawing for any structure is the responsibility of the Building Designer per ANSI/TPI 1 Sec.2.

For more information see these web sites: Alpine: alpineitw.com; TPI: tpinst.org; SBCA: sbcacomponents.com; ICC: iccsafe.org; AWC: awc.org

ALPINE AN ITW COMPANY
6750 Forum Drive
Suite 305
Orlando FL, 32821

SEQN: 409502 / HIPM FROM: CDM	Ply: 1 Qty: 1	**Job Number:** 23-8926 Sunset 7 **Truss Label:** D01	Cust: R 215 JRef:1XN32150003 T25 / DrwNo: 041.23.0912.22043 / YK 02/10/2023

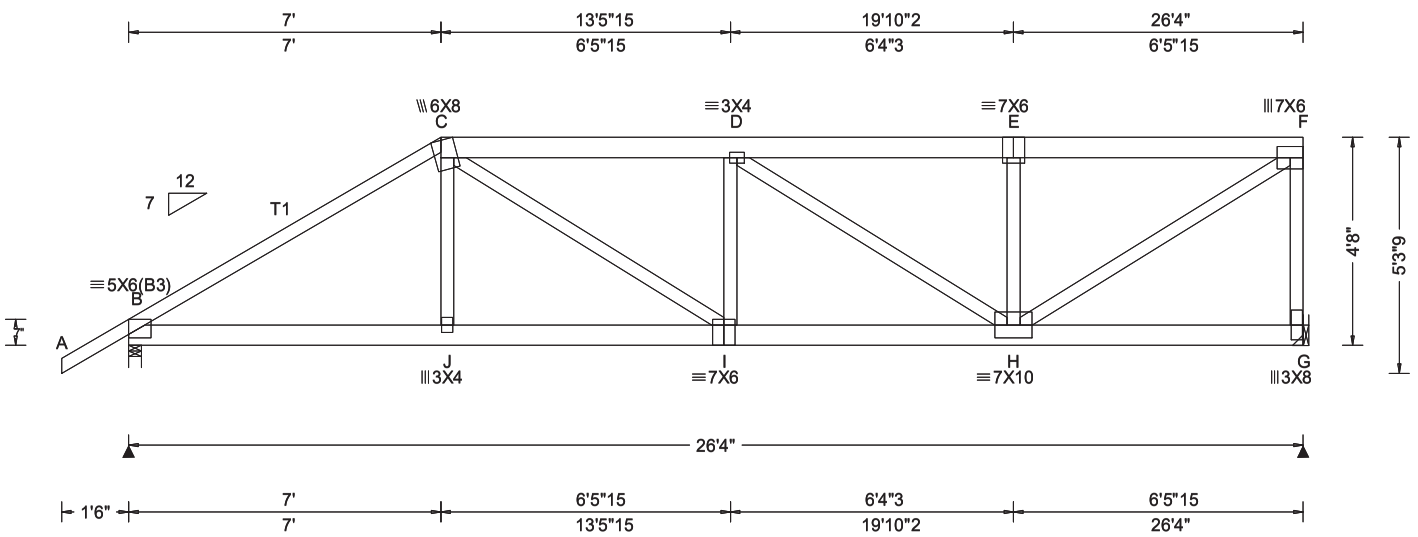

Loading Criteria (psf)

TCLL: 20.00
TCDL: 10.00
BCLL: 0.00
BCDL: 10.00
Des Ld: 40.00
NCBCLL: 0.00
Soffit: 2.00
Load Duration: 1.25
Spacing: 24.0 "

Wind Criteria

Wind Std: ASCE 7-16
Speed: 130 mph
Enclosure: Closed
Risk Category: II
EXP: C Kzt: NA
Mean Height: 11.28 ft
TCDL: 5.0 psf
BCDL: 5.0 psf
MWFRS Parallel Dist: 0 to h/2
C&C Dist a: 3.00 ft
Loc. from endwall: NA
GCpi: 0.18
Wind Duration: 1.60

Snow Criteria (Pg,Pf in PSF)

Pg: NA Ct: NA CAT: NA
Pf: NA Ce: NA
Lu: NA Cs: NA
Snow Duration: NA

Building Code:
FBC 7th Ed. 2020 Res.
TPI Std: 2014
Rep Fac: No
FT/RT:20(0)/10(0)
Plate Type(s):
WAVE

Defl/CSI Criteria

PP Deflection in	loc	L/defl	L/#
VERT(LL): 0.094	D	999	240
VERT(CL): 0.197	D	999	180
HORZ(LL): 0.024	H	-	-
HORZ(TL): 0.050	H	-	-

Creep Factor: 2.0
Max TC CSI: 0.357
Max BC CSI: 0.399
Max Web CSI: 0.646

VIEW Ver: 21.01.01A.0521.20

▲Maximum Reactions (lbs)

Loc	Gravity R+	/ R-	/ Rh	Non-Gravity / Rw	/ U	/ RL
B	2236	/-	/-	/-	/381	/-
G	2346	/-	/-	/-	/375	/-

Wind reactions based on MWFRS
B Brg Wid = 3.5 Min Req = 1.9
G Brg Wid = -
Bearing B is a rigid surface.
Members not listed have forces less than 375#

Maximum Top Chord Forces Per Ply (lbs)

Chords	Tens.	Comp.	Chords	Tens.	Comp.
B - C	585	-3543	D - E	456	-2875
C - D	608	-3821	E - F	456	-2875

Maximum Bot Chord Forces Per Ply (lbs)

Chords	Tens.	Comp.	Chords	Tens.	Comp.
B - J	2964	-471	I - H	3836	-623
J - I	2984	-470			

Maximum Web Forces Per Ply (lbs)

Webs	Tens.	Comp.	Webs	Tens.	Comp.
C - J	589	0	E - H	347	-912
C - I	1004	-165	H - F	3426	-544
D - H	201	-1161	F - G	429	-2222

Lumber

Top chord: 2x6 SP 2400f-2.0E; T1 2x4 SP M-31;
Bot chord: 2x6 SP 2400f-2.0E;
Webs: 2x4 SP M-31;

Hangers / Ties

Simpson Construction Hardware is specified based on the most current information provided by Simpson Strong-Tie. Please refer to the most recent Simpson Strong-Tie catalog for additional information.

Recommended hanger connections are based on manufacturer tested capacities and calculations. Conditions may exist that require different connections than indicated. Refer to manufacturer publication for additional information.

Bearing at location x=26'1" uses the following support conditions: 26'1"
Bearing G (26'1", 9'1"2) HUS26
Supporting Member: (1)2x6 SP 2400f-2.0E
(14) 0.148"x3" nails into supporting member,
(6) 0.148"x3" nails into supported member.

Loading

#1 hip supports 7-0-0 jacks with no webs.

Purlins

In lieu of structural panels use purlins to brace all flat TC @ 24" oc.

Wind

Wind loads and reactions based on MWFRS.
Right end vertical not exposed to wind pressure.
Wind loading based on both gable and hip roof types.

WILLIAM H. KRICK
LICENSE
No. 70861
STATE OF FLORIDA
PROFESSIONAL ENGINEER

COA #0278
02/10/2023
Florida Certificate of Product Approval #FL 1999

****WARNING**** READ AND FOLLOW ALL NOTES ON THIS DRAWING!
****IMPORTANT**** FURNISH THIS DRAWING TO ALL CONTRACTORS INCLUDING THE INSTALLERS

Trusses require extreme care in fabricating, handling, shipping, installing and bracing. Refer to and follow the latest edition of BCSI (Building Component Safety Information, by TPI and SBCA) for safety practices prior to performing these functions. Installers shall provide temporary bracing per BCSI. Unless noted otherwise, top chord shall have properly attached structural sheathing and bottom chord shall have a properly attached rigid ceiling. Locations shown for permanent lateral restraint of webs shall have bracing installed per BCSI sections B3, B7, or B10, as applicable. Apply plates to each face of truss and position as shown above and on the Joint Details, unless noted otherwise. Refer to drawings 160A-Z for standard plate positions. Refer to job's General Notes page for additional information.

Alpine, a division of ITW Building Components Group Inc. shall not be responsible for any deviation from this drawing, any failure to build the truss in conformance with ANSI/TPI 1, or for handling, shipping, installation and bracing of trusses. A seal on this drawing or cover page listing this drawing, indicates acceptance of professional engineering responsibility solely for the design shown. The suitability and use of this drawing for any structure is the responsibility of the Building Designer per ANSI/TPI 1 Sec.2.

For more information see these web sites: Alpine: alpineitw.com; TPI: tpinst.org; SBCA: sbcacomponents.com; ICC: iccsafe.org; AWC: awc.org

ALPINE AN ITW COMPANY
6750 Forum Drive
Suite 305
Orlando FL, 32821

SEQN: 409473 / HIPM FROM: CDM	Ply: 1 Qty: 1	**Job Number:** 23-8926 Sunset 7 **Truss Label:** D02	Cust: R 215 JRef:1XN32150003 T30 / DrwNo: 041.23.0912.21281 / YK 02/10/2023

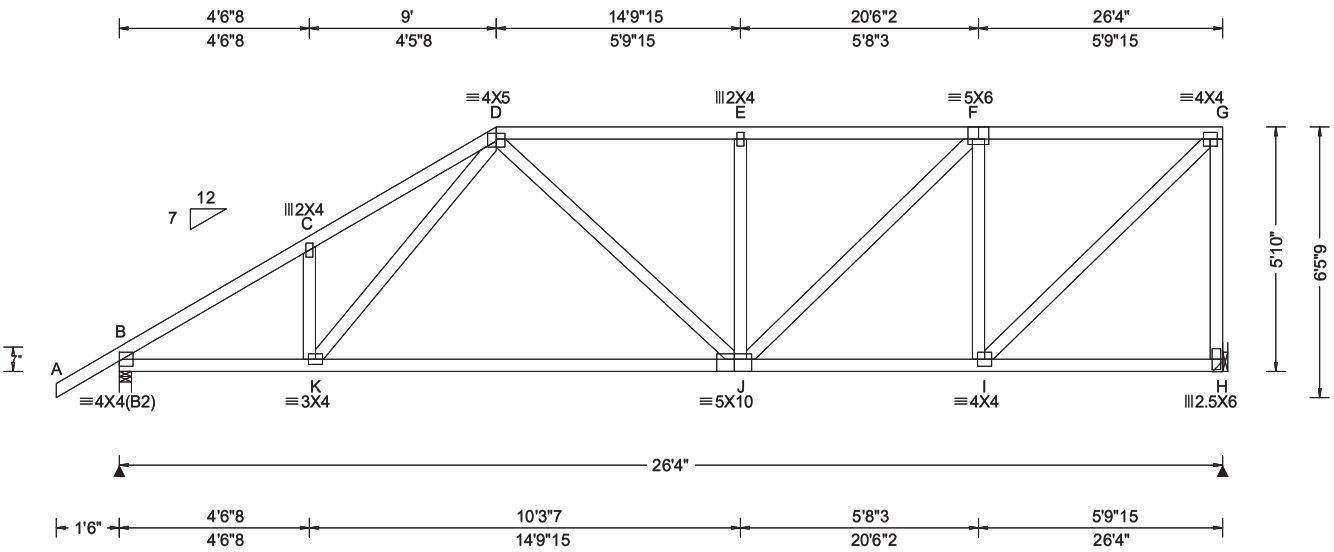

Loading Criteria (psf)	**Wind Criteria**	**Snow Criteria** (Pg,Pf in PSF)	**Defl/CSI Criteria**
TCLL: 20.00 TCDL: 10.00 BCLL: 0.00 BCDL: 10.00 Des Ld: 40.00 NCBCLL: 10.00 Soffit: 2.00 Load Duration: 1.25 Spacing: 24.0 "	Wind Std: ASCE 7-16 Speed: 130 mph Enclosure: Closed Risk Category: II EXP: C Kzt: NA Mean Height: 15.00 ft TCDL: 5.0 psf BCDL: 5.0 psf MWFRS Parallel Dist: h/2 to h C&C Dist a: 3.00 ft Loc. from endwall: not in 9.00 ft GCpi: 0.18 Wind Duration: 1.60	Pg: NA Ct: NA CAT: NA Pf: NA Ce: NA Lu: NA Cs: NA Snow Duration: NA Building Code: FBC 7th Ed. 2020 Res. TPI Std: 2014 Rep Fac: Yes FT/RT:20(0)/10(0) Plate Type(s): WAVE	PP Deflection in loc L/defl L/# VERT(LL): 0.049 E 999 240 VERT(CL): 0.100 E 999 180 HORZ(LL): 0.017 I - - HORZ(TL): 0.035 I - - Creep Factor: 2.0 Max TC CSI: 0.234 Max BC CSI: 0.341 Max Web CSI: 0.437 VIEW Ver: 21.01.01A.0521.20

▲Maximum Reactions (lbs)

	Gravity			Non-Gravity		
Loc	R+	/ R-	/ Rh	/ Rw	/ U	/ RL
B	1201	/-	/-	/733	/196	/210
H	1090	/-	/-	/568	/219	/-

Wind reactions based on MWFRS
B Brg Wid = 3.5 Min Req = 1.5
H Brg Wid = -
Bearing B is a rigid surface.
Members not listed have forces less than 375#

Maximum Top Chord Forces Per Ply (lbs)

Chords	Tens.	Comp.	Chords	Tens.	Comp.
B - C	601	- 1738	E - F	720	- 1326
C - D	679	- 1678	F - G	508	- 909
D - E	721	- 1326			

Maximum Bot Chord Forces Per Ply (lbs)

Chords	Tens.	Comp.	Chords	Tens.	Comp.
B - K	1412	- 641	J - I	950	- 537
K - J	1160	- 629			

Maximum Web Forces Per Ply (lbs)

Webs	Tens.	Comp.	Webs	Tens.	Comp.
K - D	433	- 67	I - G	1270	- 710
J - F	531	- 264	G - H	648	- 1040
F - I	553	- 784			

Lumber

Top chord: 2x4 SP M-31;
Bot chord: 2x4 SP M-31;
Webs: 2x4 SP M-31;

Hangers / Ties

Simpson Construction Hardware is specified based on the most current information provided by Simpson Strong-Tie. Please refer to the most recent Simpson Strong-Tie catalog for additional information.

Recommended hanger connections are based on manufacturer tested capacities and calculations. Conditions may exist that require different connections than indicated. Refer to manufacturer publication for additional information.

Bearing at location x=26'1" uses the following support conditions: 26'1"
Bearing H (26'1", 9'1"2) HUS26
Supporting Member: (1)2x6 SP 2400f-2.0E
(14) 0.148"x3" nails into supporting member,
(4) 0.148"x3" nails into supported member.

Purlins

In lieu of structural panels use purlins to brace all flat TC @ 24" oc.

Wind

Wind loads based on MWFRS with additional C&C member design.

Right end vertical not exposed to wind pressure.

Wind loading based on both gable and hip roof types.

WILLIAM H. KRICK
LICENSE
No. 70861
STATE OF FLORIDA
PROFESSIONAL ENGINEER

COA #0278
02/10/2023
Florida Certificate of Product Approval #FL 1999

****WARNING**** READ AND FOLLOW ALL NOTES ON THIS DRAWING!
****IMPORTANT**** FURNISH THIS DRAWING TO ALL CONTRACTORS INCLUDING THE INSTALLERS

Trusses require extreme care in fabricating, handling, shipping, installing and bracing. Refer to and follow the latest edition of BCSI (Building Component Safety Information, by TPI and SBCA) for safety practices prior to performing these functions. Installers shall provide temporary bracing per BCSI. Unless noted otherwise, top chord shall have properly attached structural sheathing and bottom chord shall have a properly attached rigid ceiling. Locations shown for permanent lateral restraint of webs shall have bracing installed per BCSI sections B3, B7, or B10, as applicable. Apply plates to each face of truss and position as shown above and on the Joint Details, unless noted otherwise. Refer to drawings 160A-Z for standard plate positions. Refer to job's General Notes page for additional information.

Alpine, a division of ITW Building Components Group Inc. shall not be responsible for any deviation from this drawing, any failure to build the truss in conformance with ANSI/TPI 1, or for handling, shipping, installation and bracing of trusses. A seal on this drawing or cover page listing this drawing, indicates acceptance of professional engineering responsibility solely for the design shown. The suitability and use of this drawing for any structure is the responsibility of the Building Designer per ANSI/TPI 1 Sec.2.

For more information see these web sites: Alpine: alpineitw.com; TPI: tpinst.org; SBCA: sbcacomponents.com; ICC: iccsafe.org; AWC: awc.org

ALPINE
AN ITW COMPANY
6750 Forum Drive
Suite 305
Orlando FL, 32821

SEQN: 409474 / SPEC FROM: CDM	Ply: 1 Qty: 1	**Job Number:** 23-8926 Sunset 7 **Truss Label:** D03	Cust: R 215 JRef:1XN32150003 T34 / DrwNo: 041.23.0912.19322 / YK 02/10/2023

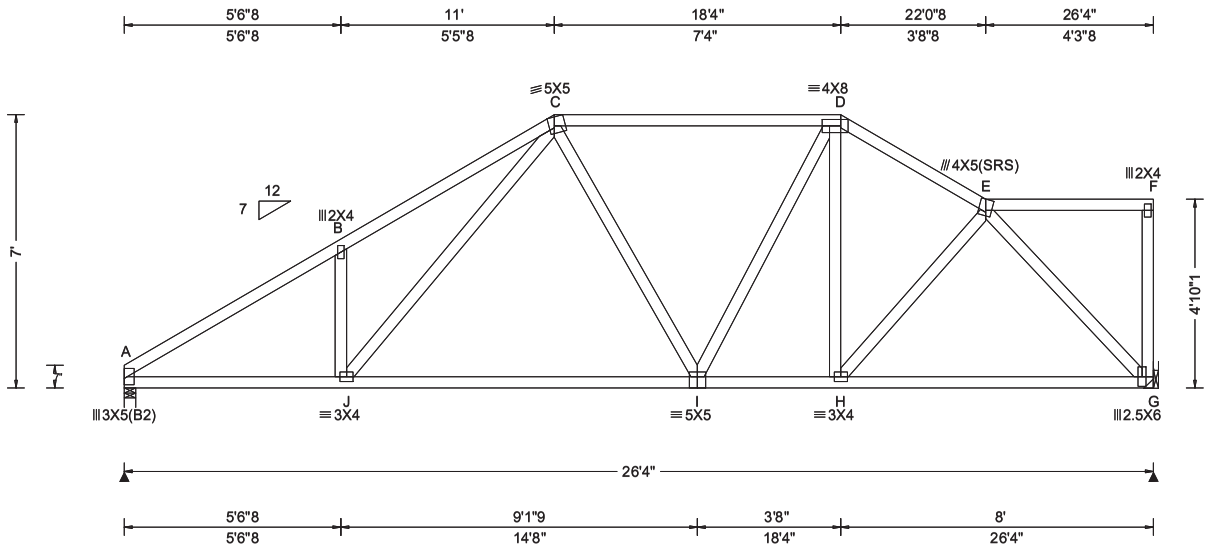

Loading Criteria (psf)

TCLL:	20.00
TCDL:	10.00
BCLL:	0.00
BCDL:	10.00
Des Ld:	40.00
NCBCLL:	10.00
Soffit:	2.00

Load Duration: 1.25
Spacing: 24.0 "

Wind Criteria
Wind Std: ASCE 7-16
Speed: 130 mph
Enclosure: Closed
Risk Category: II
EXP: C Kzt: NA
Mean Height: 15.00 ft
TCDL: 5.0 psf
BCDL: 5.0 psf
MWFRS Parallel Dist: h/2 to h
C&C Dist a: 3.00 ft
Loc. from endwall: not in 9.00 ft
GCpi: 0.18
Wind Duration: 1.60

Snow Criteria (Pg,Pf in PSF)
Pg: NA Ct: NA CAT: NA
Pf: NA Ce: NA
Lu: NA Cs: NA
Snow Duration: NA

Building Code:
FBC 7th Ed. 2020 Res.
TPI Std: 2014
Rep Fac: Yes
FT/RT:20(0)/10(0)
Plate Type(s):
WAVE

Defl/CSI Criteria

PP Deflection in	loc	L/defl	L/#
VERT(LL):	0.044 B	999	240
VERT(CL):	0.092 B	999	180
HORZ(LL):	0.019 G	-	-
HORZ(TL):	0.039 G	-	-

Creep Factor: 2.0
Max TC CSI: 0.231
Max BC CSI: 0.275
Max Web CSI: 0.473

VIEW Ver: 21.01.01A.0521.20

▲Maximum Reactions (lbs)

	Gravity			Non-Gravity		
Loc	R+	/ R-	/ Rh	/ Rw	/ U	/ RL
A	1097	/-	/-	/649	/172	/165
G	1093	/-	/-	/563	/206	/-

Wind reactions based on MWFRS
A Brg Wid = 3.5 Min Req = 1.5
G Brg Wid = -
Bearing A is a rigid surface.
Members not listed have forces less than 375#

Maximum Top Chord Forces Per Ply (lbs)

Chords	Tens.	Comp.	Chords	Tens.	Comp.
A - B	522	- 1729	C - D	498	- 1044
B - C	632	- 1684	D - E	505	- 1142

Maximum Bot Chord Forces Per Ply (lbs)

Chords	Tens.	Comp.	Chords	Tens.	Comp.
A - J	1406	- 534	I - H	951	- 405
J - I	1063	- 464	H - G	855	- 397

Maximum Web Forces Per Ply (lbs)

Webs	Tens.	Comp.	Webs	Tens.	Comp.
J - C	524	- 135	E - G	578	- 1244

Lumber

Top chord: 2x4 SP M-31;
Bot chord: 2x4 SP M-31;
Webs: 2x4 SP M-31;

Hangers / Ties

Simpson Construction Hardware is specified based on the most current information provided by Simpson Strong-Tie. Please refer to the most recent Simpson Strong-Tie catalog for additional information.

Recommended hanger connections are based on manufacturer tested capacities and calculations. Conditions may exist that require different connections than indicated. Refer to manufacturer publication for additional information.

Bearing at location x=26'1" uses the following support conditions: 26'1"
Bearing G (26'1", 9'1"2) HUS26
Supporting Member: (1)2x6 SP 2400f-2.0E
(14) 0.148"x3" nails into supporting member,
(4) 0.148"x3" nails into supported member.

Purlins

In lieu of structural panels use purlins to brace all flat TC @ 24" oc.

Wind

Wind loads based on MWFRS with additional C&C member design.

Right end vertical not exposed to wind pressure.

Wind loading based on both gable and hip roof types.

WILLIAM H. KRICK
LICENSE
No. 70861
STATE OF FLORIDA
PROFESSIONAL ENGINEER

COA #0278
02/10/2023
Florida Certificate of Product Approval #FL 1999

****WARNING**** READ AND FOLLOW ALL NOTES ON THIS DRAWING!
****IMPORTANT**** FURNISH THIS DRAWING TO ALL CONTRACTORS INCLUDING THE INSTALLERS

Trusses require extreme care in fabricating, handling, shipping, installing and bracing. Refer to and follow the latest edition of BCSI (Building Component Safety Information, by TPI and SBCA) for safety practices prior to performing these functions. Installers shall provide temporary bracing per BCSI. Unless noted otherwise, top chord shall have properly attached structural sheathing and bottom chord shall have a properly attached rigid ceiling. Locations shown for permanent lateral restraint of webs shall have bracing installed per BCSI sections B3, B7, or B10, as applicable. Apply plates to each face of truss and position as shown above and on the Joint Details, unless noted otherwise. Refer to drawings 160A-Z for standard plate positions. Refer to job's General Notes page for additional information.

Alpine, a division of ITW Building Components Group Inc. shall not be responsible for any deviation from this drawing, any failure to build the truss in conformance with ANSI/TPI 1, or for handling, shipping, installation and bracing of trusses. A seal on this drawing or cover page listing this drawing, indicates acceptance of professional engineering responsibility solely for the design shown. The suitability and use of this drawing for any structure is the responsibility of the Building Designer per ANSI/TPI 1 Sec.2.

For more information see these web sites: Alpine: alpineitw.com; TPI: tpinst.org; SBCA: sbcacomponents.com; ICC: iccsafe.org; AWC: awc.org

ALPINE AN ITW COMPANY
6750 Forum Drive
Suite 305
Orlando FL, 32821

SEQN: 409475 / SPEC FROM: CDM	Ply: 1 Qty: 1	**Job Number:** 23-8926 Sunset 7 **Truss Label:** D04	Cust: R 215 JRef:1XN32150003 T38 / DrwNo: 041.23.0912.19924 / YK 02/10/2023

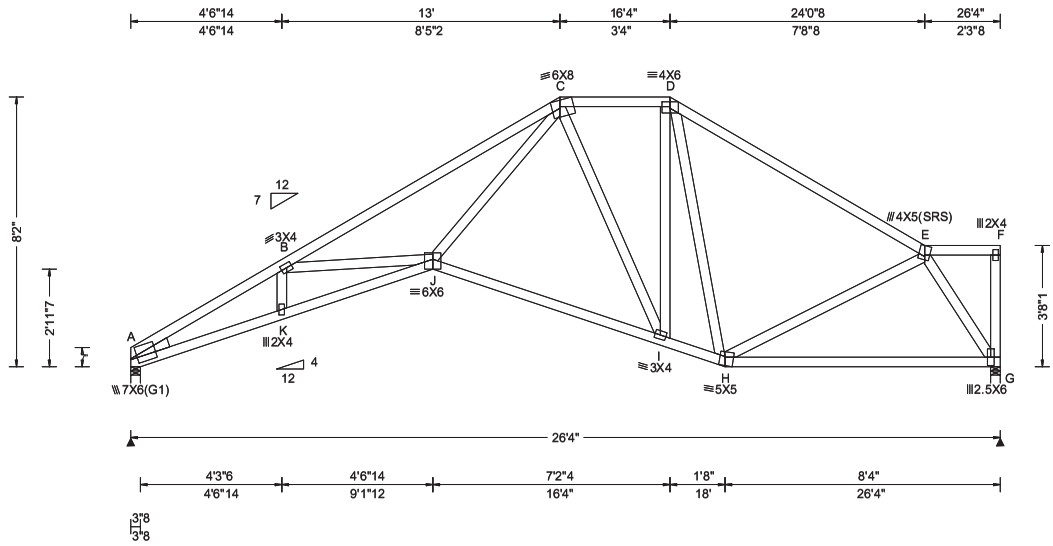

Loading Criteria (psf)

TCLL: 20.00
TCDL: 10.00
BCLL: 0.00
BCDL: 10.00
Des Ld: 40.00
NCBCLL: 10.00
Soffit: 2.00
Load Duration: 1.25
Spacing: 24.0 "

Wind Criteria

Wind Std: ASCE 7-16
Speed: 130 mph
Enclosure: Closed
Risk Category: II
EXP: C Kzt: NA
Mean Height: 15.00 ft
TCDL: 5.0 psf
BCDL: 5.0 psf
MWFRS Parallel Dist: h/2 to h
C&C Dist a: 3.00 ft
Loc. from endwall: not in 9.00 ft
GCpi: 0.18
Wind Duration: 1.60

Snow Criteria (Pg,Pf in PSF)

Pg: NA Ct: NA CAT: NA
Pf: NA Ce: NA
Lu: NA Cs: NA
Snow Duration: NA

Building Code:
FBC 7th Ed. 2020 Res.
TPI Std: 2014
Rep Fac: Yes
FT/RT:20(0)/10(0)
Plate Type(s):
WAVE

Defl/CSI Criteria

PP Deflection in	loc	L/defl	L/#
VERT(LL): 0.135	J	999	240
VERT(CL): 0.283	J	999	180
HORZ(LL): 0.092	G	-	-
HORZ(TL): 0.192	G	-	-

Creep Factor: 2.0
Max TC CSI: 0.540
Max BC CSI: 0.430
Max Web CSI: 0.338

VIEW Ver: 21.01.01A.0521.20

▲Maximum Reactions (lbs)

	Gravity			Non-Gravity		
Loc	R+	/ R-	/ Rh	/ Rw	/ U	/ RL
A	1108	/-	/-	/651	/171	/195
G	1102	/-	/-	/577	/191	/-

Wind reactions based on MWFRS
A Brg Wid = 3.5 Min Req = 1.5
G Brg Wid = 3.5 Min Req = 1.5
Bearings A & G are a rigid surface.
Members not listed have forces less than 375#

Maximum Top Chord Forces Per Ply (lbs)

Chords	Tens.	Comp.	Chords	Tens.	Comp.
A - B	917	-3438	C - D	411	-1000
B - C	785	-2911	D - E	367	-1183

Maximum Bot Chord Forces Per Ply (lbs)

Chords	Tens.	Comp.	Chords	Tens.	Comp.
A - K	3009	-890	I - H	1030	-261
K - J	3063	-907	H - G	730	-256
J - I	1296	-346			

Maximum Web Forces Per Ply (lbs)

Webs	Tens.	Comp.	Webs	Tens.	Comp.
B - J	288	-482	I - D	500	-106
J - C	1928	-428	E - G	463	-1283
C - I	183	-542			

Lumber

Top chord: 2x4 SP M-31;
Bot chord: 2x4 SP M-31;
Webs: 2x4 SP M-31;
Lt Stub Wedge: 2x4 SP M-31;

Purlins

In lieu of structural panels use purlins to brace all flat TC @ 24" oc.

Wind

Wind loads based on MWFRS with additional C&C member design.

Right end vertical not exposed to wind pressure.

Wind loading based on both gable and hip roof types.

WILLIAM H. KRICK
LICENSE
No. 70861
STATE OF FLORIDA
PROFESSIONAL ENGINEER

COA #0278
02/10/2023
Florida Certificate of Product Approval #FL 1999

****WARNING**** READ AND FOLLOW ALL NOTES ON THIS DRAWING!
****IMPORTANT**** FURNISH THIS DRAWING TO ALL CONTRACTORS INCLUDING THE INSTALLERS

Trusses require extreme care in fabricating, handling, shipping, installing and bracing. Refer to and follow the latest edition of BCSI (Building Component Safety Information, by TPI and SBCA) for safety practices prior to performing these functions. Installers shall provide temporary bracing per BCSI. Unless noted otherwise, top chord shall have properly attached structural sheathing and bottom chord shall have a properly attached rigid ceiling. Locations shown for permanent lateral restraint of webs shall have bracing installed per BCSI sections B3, B7, or B10, as applicable. Apply plates to each face of truss and position as shown above and on the Joint Details, unless noted otherwise. Refer to drawings 160A-Z for standard plate positions. Refer to job's General Notes page for additional information.

Alpine, a division of ITW Building Components Group Inc. shall not be responsible for any deviation from this drawing, any failure to build the truss in conformance with ANSI/TPI 1, or for handling, shipping, installation and bracing of trusses. A seal on this drawing or cover page listing this drawing, indicates acceptance of professional engineering responsibility solely for the design shown. The suitability and use of this drawing for any structure is the responsibility of the Building Designer per ANSI/TPI 1 Sec.2.

For more information see these web sites: Alpine: alpineitw.com; TPI: tpinst.org; SBCA: sbcacomponents.com; ICC: iccsafe.org; AWC: awc.org

ALPINE
AN ITW COMPANY
6750 Forum Drive
Suite 305
Orlando FL, 32821

SEQN: 409476 / SPEC FROM: CDM	Ply: 1 Qty: 1	**Job Number:** 23-8926 Sunset 7 **Truss Label:** D05	Cust: R 215 JRef:1XN32150003 T42 / DrwNo: 041.23.0912.19333 / YK 02/10/2023

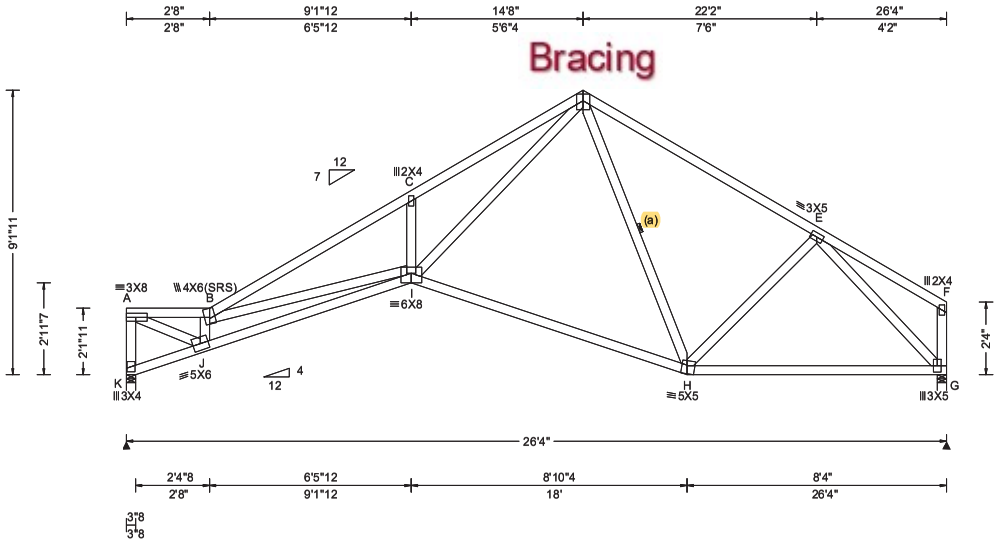

Loading Criteria (psf)		Wind Criteria	Snow Criteria (Pg,Pf in PSF)	Defl/CSI Criteria
TCLL:	20.00	Wind Std: ASCE 7-16	Pg: NA Ct: NA CAT: NA	PP Deflection in loc L/defl L/#
TCDL:	10.00	Speed: 130 mph	Pf: NA Ce: NA	VERT(LL): 0.133 C 999 240
BCLL:	0.00	Enclosure: Closed	Lu: NA Cs: NA	VERT(CL): 0.279 C 999 180
BCDL:	10.00	Risk Category: II	Snow Duration: NA	HORZ(LL): 0.087 G - -
Des Ld:	40.00	EXP: C Kzt: NA		HORZ(TL): 0.183 G - -
NCBCLL:	10.00	Mean Height: 15.00 ft	Building Code:	Creep Factor: 2.0
Soffit:	2.00	TCDL: 5.0 psf	FBC 7th Ed. 2020 Res.	Max TC CSI: 0.307
Load Duration: 1.25		BCDL: 5.0 psf	TPI Std: 2014	Max BC CSI: 0.330
Spacing: 24.0 "		MWFRS Parallel Dist: h to 2h	Rep Fac: Yes	Max Web CSI: 0.468
		C&C Dist a: 3.00 ft	FT/RT:20(0)/10(0)	
		Loc. from endwall: not in 9.00 ft	Plate Type(s):	
		GCpi: 0.18	WAVE	VIEW Ver: 21.01.01A.0521.20
		Wind Duration: 1.60		

▲Maximum Reactions (lbs)

	Gravity			Non-Gravity		
Loc	R+	/ R-	/ Rh	/ Rw	/ U	/ RL
K	1108	/-	/-	/607	/13	/180
G	1102	/-	/-	/609	/10	/-

Wind reactions based on MWFRS
K Brg Wid = 3.5 Min Req = 1.5
G Brg Wid = 3.5 Min Req = 1.5
Bearings K & G are a rigid surface.
Members not listed have forces less than 375#

Maximum Top Chord Forces Per Ply (lbs)

Chords	Tens.	Comp.	Chords	Tens.	Comp.
A - B	494	-2233	C - D	698	-3077
B - C	558	-3101	D - E	307	-1171

Maximum Bot Chord Forces Per Ply (lbs)

Chords	Tens.	Comp.	Chords	Tens.	Comp.
J - I	2806	-653	H - G	903	-181
I - H	1032	-104			

Maximum Web Forces Per Ply (lbs)

Webs	Tens.	Comp.	Webs	Tens.	Comp.
A - K	282	-1079	C - I	224	-376
A - J	2459	-542	I - D	2384	-464
J - B	506	-1883	E - G	274	-1304

Lumber

Top chord: 2x4 SP M-31;
Bot chord: 2x4 SP M-31;
Webs: 2x4 SP M-31;

Bracing

(a) Continuous lateral restraint equally spaced on member.

Purlins

In lieu of structural panels use purlins to brace all flat TC @ 24" oc.

Wind

Wind loads based on MWFRS with additional C&C member design.

End verticals not exposed to wind pressure.

Wind loading based on both gable and hip roof types.

Deflection

Max JT VERT DEFL: LL: 0.13" DL: 0.15". See detail DEFLCAMB1014 for camber recommendations. Provide for adequate drainage of roof.

WILLIAM H. KRICK
LICENSE
No. 70861
STATE OF FLORIDA
PROFESSIONAL ENGINEER

COA #0278

02/10/2023

Florida Certificate of Product Approval #FL 1999

****WARNING**** READ AND FOLLOW ALL NOTES ON THIS DRAWING!
****IMPORTANT**** FURNISH THIS DRAWING TO ALL CONTRACTORS INCLUDING THE INSTALLERS

Trusses require extreme care in fabricating, handling, shipping, installing and bracing. Refer to and follow the latest edition of BCSI (Building Component Safety Information, by TPI and SBCA) for safety practices prior to performing these functions. Installers shall provide temporary bracing per BCSI. Unless noted otherwise, top chord shall have properly attached structural sheathing and bottom chord shall have a properly attached rigid ceiling. Locations shown for permanent lateral restraint of webs shall have bracing installed per BCSI sections B3, B7, or B10, as applicable. Apply plates to each face of truss and position as shown above and on the Joint Details, unless noted otherwise. Refer to drawings 160A-Z for standard plate positions. Refer to job's General Notes page for additional information.

Alpine, a division of ITW Building Components Group Inc. shall not be responsible for any deviation from this drawing, any failure to build the truss in conformance with ANSI/TPI 1, or for handling, shipping, installation and bracing of trusses. A seal on this drawing or cover page listing this drawing, indicates acceptance of professional engineering responsibility solely for the design shown. The suitability and use of this drawing for any structure is the responsibility of the Building Designer per ANSI/TPI 1 Sec.2.

For more information see these web sites: Alpine: alpineitw.com; TPI: tpinst.org; SBCA: sbcacomponents.com; ICC: iccsafe.org; AWC: awc.org

ALPINE AN ITW COMPANY
6750 Forum Drive
Suite 305
Orlando FL, 32821

SEQN: 409477 / SPEC FROM: CDM	Ply: 1 Qty: 1	**Job Number:** 23-8926 Sunset 7 **Truss Label:** D06	Cust: R 215 JRef:1XN32150003 T43 / DrwNo: 041.23.0912.20682 / YK 02/10/2023

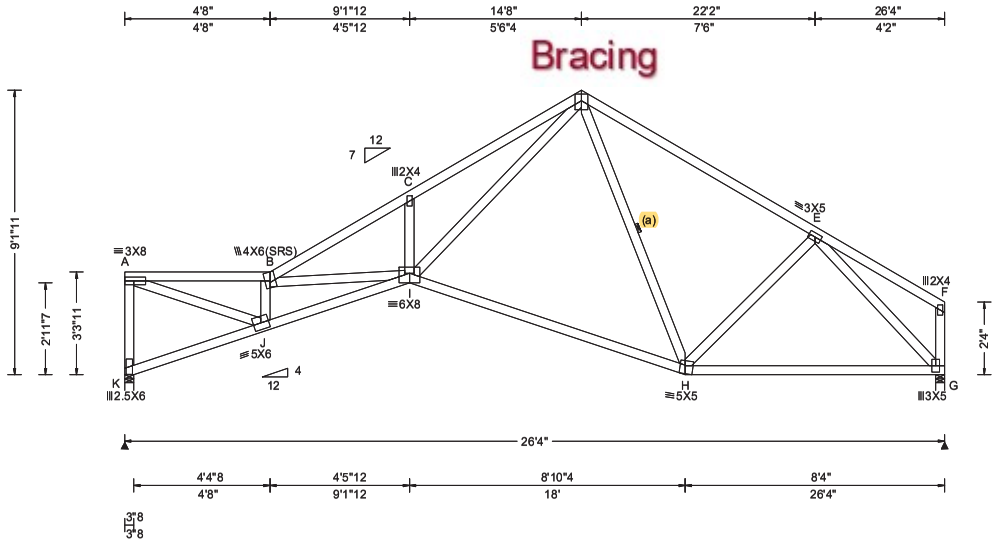

Loading Criteria (psf)	**Wind Criteria**	**Snow Criteria** (Pg,Pf in PSF)	**Defl/CSI Criteria**
TCLL: 20.00 TCDL: 10.00 BCLL: 0.00 BCDL: 10.00 Des Ld: 40.00 NCBCLL: 10.00 Soffit: 2.00 Load Duration: 1.25 Spacing: 24.0 "	Wind Std: ASCE 7-16 Speed: 130 mph Enclosure: Closed Risk Category: II EXP: C Kzt: NA Mean Height: 15.00 ft TCDL: 5.0 psf BCDL: 5.0 psf MWFRS Parallel Dist: h to 2h C&C Dist a: 3.00 ft Loc. from endwall: not in 9.00 ft GCpi: 0.18 Wind Duration: 1.60	Pg: NA Ct: NA CAT: NA Pf: NA Ce: NA Lu: NA Cs: NA Snow Duration: NA Building Code: FBC 7th Ed. 2020 Res. TPI Std: 2014 Rep Fac: Yes FT/RT:20(0)/10(0) Plate Type(s): WAVE	PP Deflection in loc L/defl L/# VERT(LL): 0.135 C 999 240 VERT(CL): 0.282 C 999 180 HORZ(LL): 0.085 G - - HORZ(TL): 0.179 G - - Creep Factor: 2.0 Max TC CSI: 0.218 Max BC CSI: 0.318 Max Web CSI: 0.468 VIEW Ver: 21.01.01A.0521.20

▲ Maximum Reactions (lbs)

	Gravity			Non-Gravity		
Loc	R+	/ R-	/ Rh	/ Rw	/ U	/ RL
K	1108	/-	/-	/582	/38	/175
G	1102	/-	/-	/613	/7	/-

Wind reactions based on MWFRS
K Brg Wid = 3.5 Min Req = 1.5
G Brg Wid = 3.5 Min Req = 1.5
Bearings K & G are a rigid surface.
Members not listed have forces less than 375#

Maximum Top Chord Forces Per Ply (lbs)

Chords	Tens.	Comp.	Chords	Tens.	Comp.
A - B	625	-2521	C - D	717	-3023
B - C	604	-3023	D - E	315	-1172

Maximum Bot Chord Forces Per Ply (lbs)

Chords	Tens.	Comp.	Chords	Tens.	Comp.
J - I	2963	-709	H - G	902	-186
I - H	1033	-115			

Maximum Web Forces Per Ply (lbs)

Webs	Tens.	Comp.	Webs	Tens.	Comp.
A - K	360	-1058	I - D	2324	-479
A - J	2674	-659	E - G	281	-1302
J - B	516	-1799			

Lumber

Top chord: 2x4 SP M-31;
Bot chord: 2x4 SP M-31;
Webs: 2x4 SP M-31;

Bracing

(a) Continuous lateral restraint equally spaced on member.

Purlins

In lieu of structural panels use purlins to brace all flat TC @ 24" oc.

Wind

Wind loads based on MWFRS with additional C&C member design.

End verticals not exposed to wind pressure.

Wind loading based on both gable and hip roof types.

Deflection

Max JT VERT DEFL: LL: 0.13" DL: 0.15". See detail DEFLCAMB1014 for camber recommendations. Provide for adequate drainage of roof.

WILLIAM H. KRICK
LICENSE
No. 70861
STATE OF
FLORIDA
PROFESSIONAL ENGINEER

COA #0278
02/10/2023
Florida Certificate of Product Approval #FL 1999

****WARNING**** READ AND FOLLOW ALL NOTES ON THIS DRAWING!
****IMPORTANT**** FURNISH THIS DRAWING TO ALL CONTRACTORS INCLUDING THE INSTALLERS

Trusses require extreme care in fabricating, handling, shipping, installing and bracing. Refer to and follow the latest edition of BCSI (Building Component Safety Information, by TPI and SBCA) for safety practices prior to performing these functions. Installers shall provide temporary bracing per BCSI. Unless noted otherwise, top chord shall have properly attached structural sheathing and bottom chord shall have a properly attached rigid ceiling. Locations shown for permanent lateral restraint of webs shall have bracing installed per BCSI sections B3, B7, or B10, as applicable. Apply plates to each face of truss and position as shown above and on the Joint Details, unless noted otherwise. Refer to drawings 160A-Z for standard plate positions. Refer to job's General Notes page for additional information.

Alpine, a division of ITW Building Components Group Inc. shall not be responsible for any deviation from this drawing, any failure to build the truss in conformance with ANSI/TPI 1, or for handling, shipping, installation and bracing of trusses. A seal on this drawing or cover page listing this drawing, indicates acceptance of professional engineering responsibility solely for the design shown. The suitability and use of this drawing for any structure is the responsibility of the Building Designer per ANSI/TPI 1 Sec.2.

For more information see these web sites: Alpine: alpineitw.com; TPI: tpinst.org; SBCA: sbcacomponents.com; ICC: iccsafe.org; AWC: awc.org

ALPINE
AN ITW COMPANY
6750 Forum Drive
Suite 305
Orlando FL, 32821

SEQN: 409478 / SPEC FROM: CDM	Ply: 1 Qty: 1	**Job Number:** 23-8926 Sunset 7 **Truss Label:** D07	Cust: R 215 JRef:1XN32150003 T12 / DrwNo: 041.23.0912.22420 / YK 02/10/2023

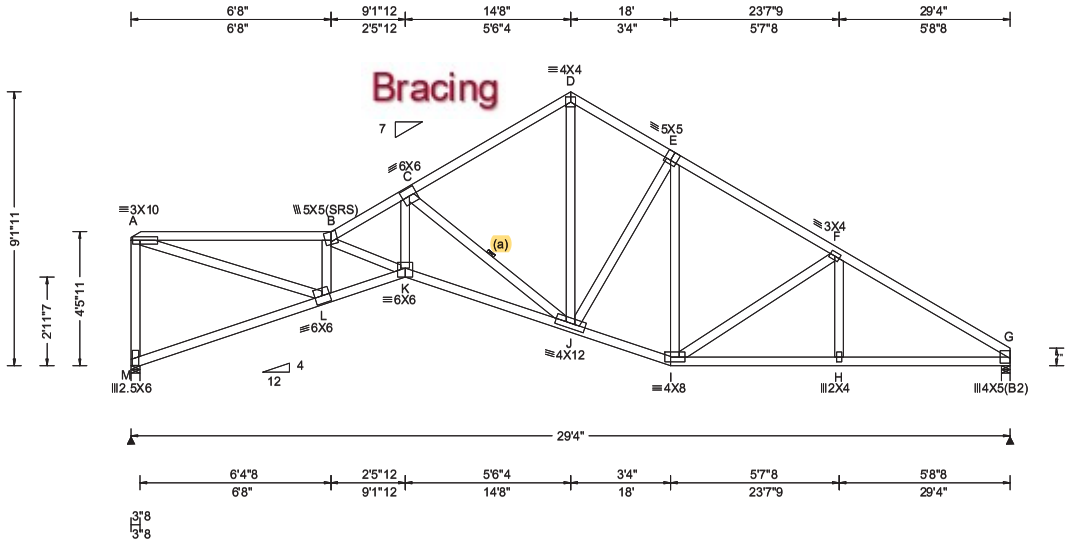

Loading Criteria (psf)

TCLL:	20.00
TCDL:	10.00
BCLL:	0.00
BCDL:	10.00
Des Ld:	40.00
NCBCLL:	10.00
Soffit:	2.00

Load Duration: 1.25
Spacing: 24.0 "

Wind Criteria
Wind Std: ASCE 7-16
Speed: 130 mph
Enclosure: Closed
Risk Category: II
EXP: C Kzt: NA
Mean Height: 15.00 ft
TCDL: 5.0 psf
BCDL: 5.0 psf
MWFRS Parallel Dist: h to 2h
C&C Dist a: 3.00 ft
Loc. from endwall: not in 9.00 ft
GCpi: 0.18
Wind Duration: 1.60

Snow Criteria (Pg,Pf in PSF)
Pg: NA Ct: NA CAT: NA
Pf: NA Ce: NA
Lu: NA Cs: NA
Snow Duration: NA

Building Code:
FBC 7th Ed. 2020 Res.
TPI Std: 2014
Rep Fac: Yes
FT/RT:20(0)/10(0)
Plate Type(s):
WAVE

Defl/CSI Criteria

PP Deflection in	loc	L/defl	L/#
VERT(LL):	0.164 K	999	240
VERT(CL):	0.344 K	999	180
HORZ(LL):	0.105 G	-	-
HORZ(TL):	0.220 G	-	-

Creep Factor: 2.0
Max TC CSI: 0.455
Max BC CSI: 0.333
Max Web CSI: 0.323

VIEW Ver: 21.01.01A.0521.20

▲Maximum Reactions (lbs)

	Gravity			Non-Gravity		
Loc	R+	/ R-	/ Rh	/ Rw	/ U	/ RL
M	1230	/-	/-	/637	/72	/220
G	1227	/-	/-	/717	/8	/-

Wind reactions based on MWFRS
M Brg Wid = 3.5 Min Req = 1.5
G Brg Wid = 3.5 Min Req = 1.5
Bearings M & G are a rigid surface.
Members not listed have forces less than 375#

Maximum Top Chord Forces Per Ply (lbs)

Chords	Tens.	Comp.	Chords	Tens.	Comp.
A - B	699	-2970	D - E	401	-1430
B - C	723	-3455	E - F	385	-1551
C - D	384	-1468	F - G	385	-1943

Maximum Bot Chord Forces Per Ply (lbs)

Chords	Tens.	Comp.	Chords	Tens.	Comp.
L - K	3368	-661	I - H	1588	-262
K - J	3054	-451	H - G	1590	-260
J - I	1342	-145			

Maximum Web Forces Per Ply (lbs)

Webs	Tens.	Comp.	Webs	Tens.	Comp.
M - A	385	-1176	C - J	461	-2198
A - L	3109	-729	J - D	1098	-266
L - B	553	-1938	I - F	154	-390
K - C	2199	-405			

Lumber

Top chord: 2x4 SP M-31;
Bot chord: 2x4 SP M-31;
Webs: 2x4 SP M-31;

Bracing

(a) Continuous lateral restraint equally spaced on member.

Purlins

In lieu of structural panels use purlins to brace all flat TC @ 24" oc.

Wind

Wind loads based on MWFRS with additional C&C member design.

Left end vertical not exposed to wind pressure.

Wind loading based on both gable and hip roof types.

Deflection

Max JT VERT DEFL: LL: 0.16" DL: 0.18". See detail DEFLCAMB1014 for camber recommendations. Provide for adequate drainage of roof.

WILLIAM H. KRICK
LICENSE
No. 70861
STATE OF FLORIDA
PROFESSIONAL ENGINEER

COA #0278
02/10/2023
Florida Certificate of Product Approval #FL 1999

****WARNING**** READ AND FOLLOW ALL NOTES ON THIS DRAWING!
****IMPORTANT**** FURNISH THIS DRAWING TO ALL CONTRACTORS INCLUDING THE INSTALLERS

Trusses require extreme care in fabricating, handling, shipping, installing and bracing. Refer to and follow the latest edition of BCSI (Building Component Safety Information, by TPI and SBCA) for safety practices prior to performing these functions. Installers shall provide temporary bracing per BCSI. Unless noted otherwise, top chord shall have properly attached structural sheathing and bottom chord shall have a properly attached rigid ceiling. Locations shown for permanent lateral restraint of webs shall have bracing installed per BCSI sections B3, B7, or B10, as applicable. Apply plates to each face of truss and position as shown above and on the Joint Details, unless noted otherwise. Refer to drawings 160A-Z for standard plate positions. Refer to job's General Notes page for additional information.

Alpine, a division of ITW Building Components Group Inc. shall not be responsible for any deviation from this drawing, any failure to build the truss in conformance with ANSI/TPI 1, or for handling, shipping, installation and bracing of trusses. A seal on this drawing or cover page listing this drawing, indicates acceptance of professional engineering responsibility solely for the design shown. The suitability and use of this drawing for any structure is the responsibility of the Building Designer per ANSI/TPI 1 Sec.2.

For more information see these web sites: Alpine: alpineitw.com; TPI: tpinst.org; SBCA: sbcacomponents.com; ICC: iccsafe.org; AWC: awc.org

ALPINE AN ITW COMPANY
6750 Forum Drive
Suite 305
Orlando FL, 32821

SEQN: 409479 / SPEC FROM: CDM	Ply: 1 Qty: 1	**Job Number:** 23-8926 Sunset 7 **Truss Label:** D08	Cust: R 215 JRef:1XN32150003 T35 / DrwNo: 041.23.0912.20164 / YK 02/10/2023

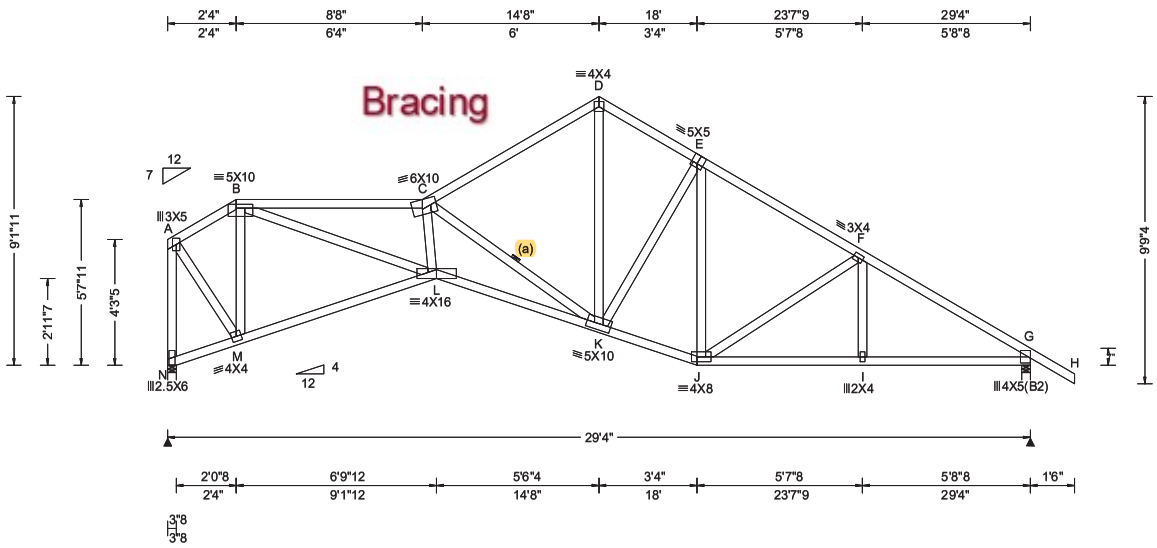

Loading Criteria (psf)

TCLL: 20.00
TCDL: 10.00
BCLL: 0.00
BCDL: 10.00
Des Ld: 40.00
NCBCLL: 10.00
Soffit: 2.00
Load Duration: 1.25
Spacing: 24.0 "

Wind Criteria

Wind Std: ASCE 7-16
Speed: 130 mph
Enclosure: Closed
Risk Category: II
EXP: C Kzt: NA
Mean Height: 15.00 ft
TCDL: 5.0 psf
BCDL: 5.0 psf
MWFRS Parallel Dist: h to 2h
C&C Dist a: 3.00 ft
Loc. from endwall: not in 9.00 ft
GCpi: 0.18
Wind Duration: 1.60

Snow Criteria (Pg,Pf in PSF)

Pg: NA Ct: NA CAT: NA
Pf: NA Ce: NA
Lu: NA Cs: NA
Snow Duration: NA

Building Code:
FBC 7th Ed. 2020 Res.
TPI Std: 2014
Rep Fac: Yes
FT/RT:20(0)/10(0)
Plate Type(s):
WAVE

Defl/CSI Criteria

PP Deflection in	loc	L/defl	L/#
VERT(LL): 0.168	L	999	240
VERT(CL): 0.349	L	999	180
HORZ(LL): 0.108	G	-	-
HORZ(TL): 0.225	G	-	-

Creep Factor: 2.0
Max TC CSI: 0.309
Max BC CSI: 0.372
Max Web CSI: 0.410

VIEW Ver: 21.01.01A.0521.20

▲Maximum Reactions (lbs)

	Gravity			Non-Gravity		
Loc	R+	/ R-	/ Rh	/ Rw	/ U	/ RL
N	1229	/-	/-	/638	/61	/237
G	1332	/-	/-	/806	/30	/-

Wind reactions based on MWFRS
N Brg Wid = 3.5 Min Req = 1.5
G Brg Wid = 3.5 Min Req = 1.5
Bearings N & G are a rigid surface.
Members not listed have forces less than 375#

Maximum Top Chord Forces Per Ply (lbs)

Chords	Tens.	Comp.	Chords	Tens.	Comp.
A - B	215	- 736	D - E	428	- 1424
B - C	836	- 3345	E - F	410	- 1541
C - D	413	- 1476	F - G	404	- 1922

Maximum Bot Chord Forces Per Ply (lbs)

Chords	Tens.	Comp.	Chords	Tens.	Comp.
M - L	673	- 115	J - I	1565	- 243
L - K	3649	- 640	I - G	1566	- 242
K - J	1335	- 135			

Maximum Web Forces Per Ply (lbs)

Webs	Tens.	Comp.	Webs	Tens.	Comp.
A - N	338	- 1244	C - L	575	- 3
A - M	1070	- 306	C - K	667	- 2759
B - M	363	- 920	K - D	1081	- 301
B - L	2885	- 646			

Lumber

Top chord: 2x4 SP M-31;
Bot chord: 2x4 SP M-31;
Webs: 2x4 SP M-31;

Bracing

(a) Continuous lateral restraint equally spaced on member.

Purlins

In lieu of structural panels use purlins to brace all flat TC @ 24" oc.

Wind

Wind loads based on MWFRS with additional C&C member design.

Left end vertical not exposed to wind pressure.

Wind loading based on both gable and hip roof types.

WILLIAM H. KRICK
LICENSE
No. 70861
STATE OF FLORIDA
PROFESSIONAL ENGINEER

COA #0278
02/10/2023
Florida Certificate of Product Approval #FL 1999

****WARNING**** READ AND FOLLOW ALL NOTES ON THIS DRAWING!
****IMPORTANT**** FURNISH THIS DRAWING TO ALL CONTRACTORS INCLUDING THE INSTALLERS

Trusses require extreme care in fabricating, handling, shipping, installing and bracing. Refer to and follow the latest edition of BCSI (Building Component Safety Information, by TPI and SBCA) for safety practices prior to performing these functions. Installers shall provide temporary bracing per BCSI. Unless noted otherwise, top chord shall have properly attached structural sheathing and bottom chord shall have a properly attached rigid ceiling. Locations shown for permanent lateral restraint of webs shall have bracing installed per BCSI sections B3, B7, or B10, as applicable. Apply plates to each face of truss and position as shown above and on the Joint Details, unless noted otherwise. Refer to drawings 160A-Z for standard plate positions. Refer to job's General Notes page for additional information.

Alpine, a division of ITW Building Components Group Inc. shall not be responsible for any deviation from this drawing, any failure to build the truss in conformance with ANSI/TPI 1, or for handling, shipping, installation and bracing of trusses. A seal on this drawing or cover page listing this drawing, indicates acceptance of professional engineering responsibility solely for the design shown. The suitability and use of this drawing for any structure is the responsibility of the Building Designer per ANSI/TPI 1 Sec.2.

For more information see these web sites: Alpine: alpineitw.com; TPI: tpinst.org; SBCA: sbcacomponents.com; ICC: iccsafe.org; AWC: awc.org

ALPINE AN ITW COMPANY
6750 Forum Drive
Suite 305
Orlando FL, 32821

SEQN: 409480 / SPEC FROM: CDM	Ply: 1 Qty: 1	**Job Number:** 23-8926 Sunset 7 **Truss Label:** D09	Cust: R 215 JRef:1XN32150003 T14 DrwNo: 041.23.0912.20625 / WHK 02/10/2023

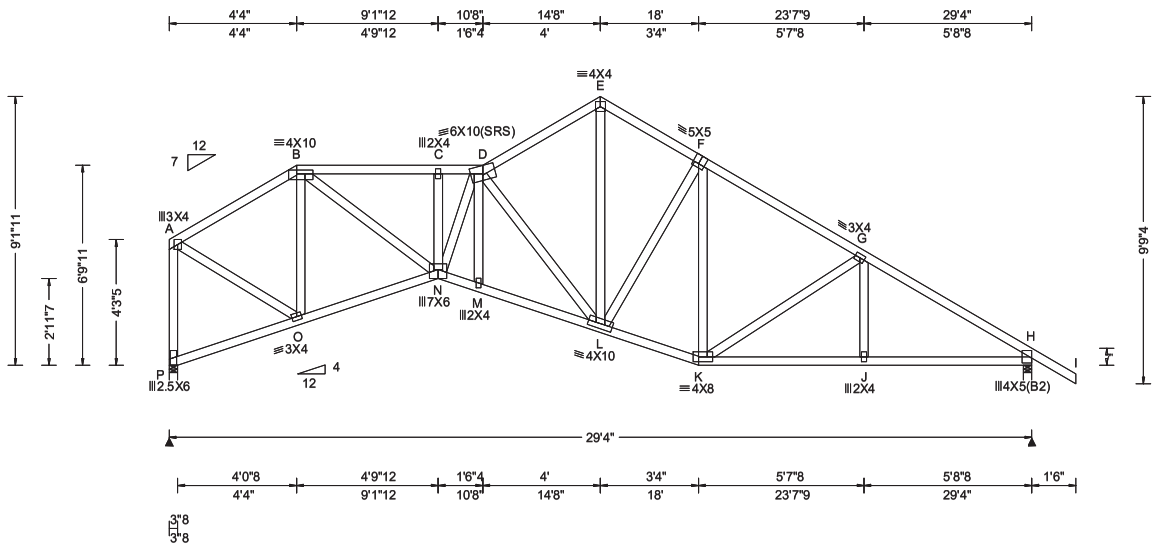

Loading Criteria (psf)	**Wind Criteria**	**Snow Criteria** (Pg,Pf in PSF)	**Defl/CSI Criteria**
TCLL: 20.00 TCDL: 10.00 BCLL: 0.00 BCDL: 10.00 Des Ld: 40.00 NCBCLL: 10.00 Soffit: 2.00 Load Duration: 1.25 Spacing: 24.0 "	Wind Std: ASCE 7-16 Speed: 130 mph Enclosure: Closed Risk Category: II EXP: C Kzt: NA Mean Height: 15.00 ft TCDL: 5.0 psf BCDL: 5.0 psf MWFRS Parallel Dist: h to 2h C&C Dist a: 3.00 ft Loc. from endwall: not in 9.00 ft GCpi: 0.18 Wind Duration: 1.60	Pg: NA Ct: NA CAT: NA Pf: NA Ce: NA Lu: NA Cs: NA Snow Duration: NA Building Code: FBC 7th Ed. 2020 Res. TPI Std: 2014 Rep Fac: Yes FT/RT:20(0)/10(0) Plate Type(s): WAVE	PP Deflection in loc L/defl L/# VERT(LL): 0.083 D 999 240 VERT(CL): 0.173 D 999 180 HORZ(LL): 0.058 H - - HORZ(TL): 0.121 H - - Creep Factor: 2.0 Max TC CSI: 0.249 Max BC CSI: 0.351 Max Web CSI: 0.653 VIEW Ver: 21.01.01A.0521.20

▲Maximum Reactions (lbs)

	Gravity			Non-Gravity		
Loc	R+	/ R-	/ Rh	/ Rw	/ U	/ RL
P	1229	/-	/-	/639	/51	/237
H	1332	/-	/-	/810	/40	/-

Wind reactions based on MWFRS
P Brg Wid = 3.5 Min Req = 1.5
H Brg Wid = 3.5 Min Req = 1.5
Bearings P & H are a rigid surface.
Members not listed have forces less than 375#

Maximum Top Chord Forces Per Ply (lbs)

Chords	Tens.	Comp.	Chords	Tens.	Comp.
A - B	332	-1123	E - F	460	-1421
B - C	633	-2189	F - G	437	-1543
C - D	633	-2188	G - H	430	-1921
D - E	451	-1424			

Maximum Bot Chord Forces Per Ply (lbs)

Chords	Tens.	Comp.	Chords	Tens.	Comp.
O - N	976	-145	L - K	1334	-160
N - M	2176	-376	K - J	1564	-265
M - L	2182	-382	J - H	1565	-263

Maximum Web Forces Per Ply (lbs)

Webs	Tens.	Comp.	Webs	Tens.	Comp.
A - P	340	-1195	B - N	1581	-378
A - O	1071	-279	D - L	432	-1479
B - O	276	-730	L - E	1138	-357

Lumber

Top chord: 2x4 SP M-31;
Bot chord: 2x4 SP M-31;
Webs: 2x4 SP M-31;

Purlins

In lieu of structural panels use purlins to brace all flat TC @ 24" oc.

Wind

Wind loads based on MWFRS with additional C&C member design.

Left end vertical not exposed to wind pressure.

Wind loading based on both gable and hip roof types.

WILLIAM H. KRICK
LICENSE
No. 70861
STATE OF FLORIDA
PROFESSIONAL ENGINEER

COA #0278

02/10/2023

Florida Certificate of Product Approval #FL 1999

****WARNING**** READ AND FOLLOW ALL NOTES ON THIS DRAWING!
****IMPORTANT**** FURNISH THIS DRAWING TO ALL CONTRACTORS INCLUDING THE INSTALLERS

Trusses require extreme care in fabricating, handling, shipping, installing and bracing. Refer to and follow the latest edition of BCSI (Building Component Safety Information, by TPI and SBCA) for safety practices prior to performing these functions. Installers shall provide temporary bracing per BCSI. Unless noted otherwise, top chord shall have properly attached structural sheathing and bottom chord shall have a properly attached rigid ceiling. Locations shown for permanent lateral restraint of webs shall have bracing installed per BCSI sections B3, B7, or B10, as applicable. Apply plates to each face of truss and position as shown above and on the Joint Details, unless noted otherwise. Refer to drawings 160A-Z for standard plate positions. Refer to job's General Notes page for additional information.

Alpine, a division of ITW Building Components Group Inc. shall not be responsible for any deviation from this drawing, any failure to build the truss in conformance with ANSI/TPI 1, or for handling, shipping, installation and bracing of trusses. A seal on this drawing or cover page listing this drawing, indicates acceptance of professional engineering responsibility solely for the design shown. The suitability and use of this drawing for any structure is the responsibility of the Building Designer per ANSI/TPI 1 Sec.2.

For more information see these web sites: Alpine: alpineitw.com; TPI: tpinst.org; SBCA: sbcacomponents.com; ICC: iccsafe.org; AWC: awc.org

ALPINE AN ITW COMPANY
6750 Forum Drive
Suite 305
Orlando FL, 32821

SEQN: 409481 / SPEC FROM: CDM	Ply: 1 Qty: 1	**Job Number:** 23-8926 Sunset 7 **Truss Label:** D10	Cust: R 215 JRef:1XN32150003 T10 DrwNo: 041.23.0912.19446 / WHK 02/10/2023

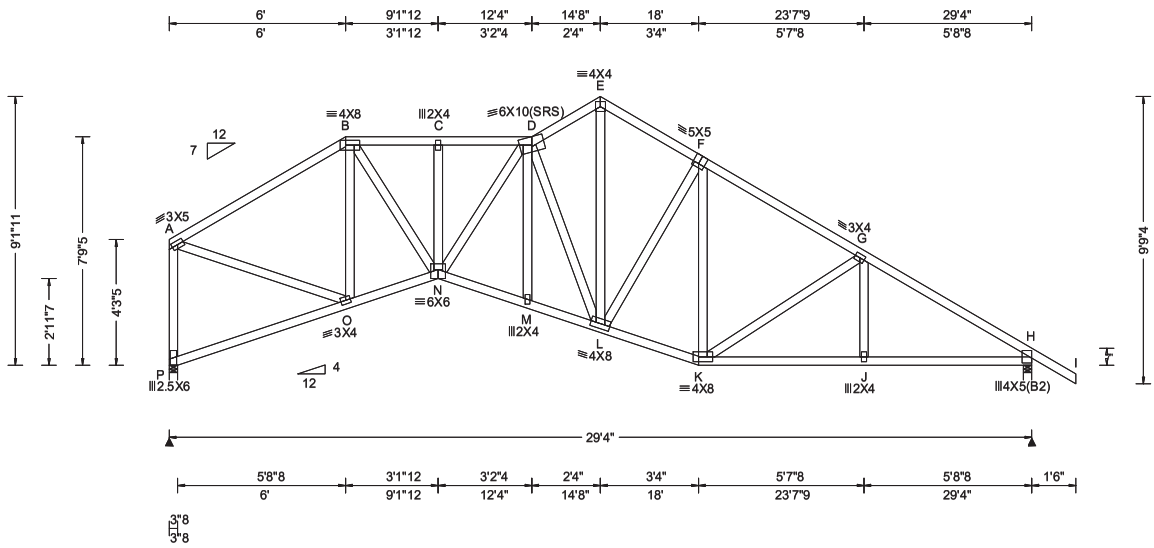

Loading Criteria (psf)

TCLL: 20.00
TCDL: 10.00
BCLL: 0.00
BCDL: 10.00
Des Ld: 40.00
NCBCLL: 10.00
Soffit: 2.00
Load Duration: 1.25
Spacing: 24.0 "

Wind Criteria

Wind Std: ASCE 7-16
Speed: 130 mph
Enclosure: Closed
Risk Category: II
EXP: C Kzt: NA
Mean Height: 15.00 ft
TCDL: 5.0 psf
BCDL: 5.0 psf
MWFRS Parallel Dist: h to 2h
C&C Dist a: 3.00 ft
Loc. from endwall: not in 9.00 ft
GCpi: 0.18
Wind Duration: 1.60

Snow Criteria (Pg,Pf in PSF)

Pg: NA Ct: NA CAT: NA
Pf: NA Ce: NA
Lu: NA Cs: NA
Snow Duration: NA

Building Code:
FBC 7th Ed. 2020 Res.
TPI Std: 2014
Rep Fac: Yes
FT/RT:20(0)/10(0)
Plate Type(s):
WAVE

Defl/CSI Criteria

PP Deflection in	loc	L/defl	L/#
VERT(LL): 0.070	D	999	240
VERT(CL): 0.146	D	999	180
HORZ(LL): 0.048	H	-	-
HORZ(TL): 0.100	H	-	-

Creep Factor: 2.0
Max TC CSI: 0.249
Max BC CSI: 0.350
Max Web CSI: 0.518

VIEW Ver: 21.01.01A.0521.20

▲Maximum Reactions (lbs)

Loc	Gravity R+	/ R-	/ Rh	Non-Gravity / Rw	/ U	/ RL
P	1229	/-	/-	/641	/42	/237
H	1332	/-	/-	/814	/49	/-

Wind reactions based on MWFRS
P Brg Wid = 3.5 Min Req = 1.5
H Brg Wid = 3.5 Min Req = 1.5
Bearings P & H are a rigid surface.
Members not listed have forces less than 375#

Maximum Top Chord Forces Per Ply (lbs)

Chords	Tens.	Comp.	Chords	Tens.	Comp.
A - B	389	- 1358	E - F	488	- 1419
B - C	546	- 1707	F - G	460	- 1543
C - D	546	- 1706	G - H	451	- 1920
D - E	493	- 1388			

Maximum Bot Chord Forces Per Ply (lbs)

Chords	Tens.	Comp.	Chords	Tens.	Comp.
O - N	1158	- 163	L - K	1334	- 182
N - M	1665	- 269	K - J	1563	- 283
M - L	1662	- 268	J - H	1565	- 282

Maximum Web Forces Per Ply (lbs)

Webs	Tens.	Comp.	Webs	Tens.	Comp.
A - P	337	- 1177	B - N	1065	- 278
A - O	1163	- 281	D - L	395	- 1158
B - O	241	- 603	L - E	1187	- 421

Lumber

Top chord: 2x4 SP M-31;
Bot chord: 2x4 SP M-31;
Webs: 2x4 SP M-31;

Purlins

In lieu of structural panels use purlins to brace all flat TC @ 24" oc.

Wind

Wind loads based on MWFRS with additional C&C member design.

Left end vertical not exposed to wind pressure.

Wind loading based on both gable and hip roof types.

WILLIAM H. KRICK
LICENSE
No. 70861
STATE OF FLORIDA
PROFESSIONAL ENGINEER

COA #0278

02/10/2023

Florida Certificate of Product Approval #FL 1999

****WARNING**** READ AND FOLLOW ALL NOTES ON THIS DRAWING!
****IMPORTANT**** FURNISH THIS DRAWING TO ALL CONTRACTORS INCLUDING THE INSTALLERS

Trusses require extreme care in fabricating, handling, shipping, installing and bracing. Refer to and follow the latest edition of BCSI (Building Component Safety Information, by TPI and SBCA) for safety practices prior to performing these functions. Installers shall provide temporary bracing per BCSI. Unless noted otherwise, top chord shall have properly attached structural sheathing and bottom chord shall have a properly attached rigid ceiling. Locations shown for permanent lateral restraint of webs shall have bracing installed per BCSI sections B3, B7, or B10, as applicable. Apply plates to each face of truss and position as shown above and on the Joint Details, unless noted otherwise. Refer to drawings 160A-Z for standard plate positions. Refer to job's General Notes page for additional information.

Alpine, a division of ITW Building Components Group Inc. shall not be responsible for any deviation from this drawing, any failure to build the truss in conformance with ANSI/TPI 1, or for handling, shipping, installation and bracing of trusses. A seal on this drawing or cover page listing this drawing, indicates acceptance of professional engineering responsibility solely for the design shown. The suitability and use of this drawing for any structure is the responsibility of the Building Designer per ANSI/TPI 1 Sec.2.

For more information see these web sites: Alpine: alpineitw.com; TPI: tpinst.org; SBCA: sbcacomponents.com; ICC: iccsafe.org; AWC: awc.org

ALPINE AN ITW COMPANY
6750 Forum Drive
Suite 305
Orlando FL, 32821

SEQN: 409482 / SPEC FROM: CDM	Ply: 1 Qty: 1	**Job Number:** 23-8926 Sunset 7 **Truss Label:** D11	Cust: R 215 JRef:1XN32150003 T24 DrwNo: 041.23.0912.22028 / WHK 02/10/2023

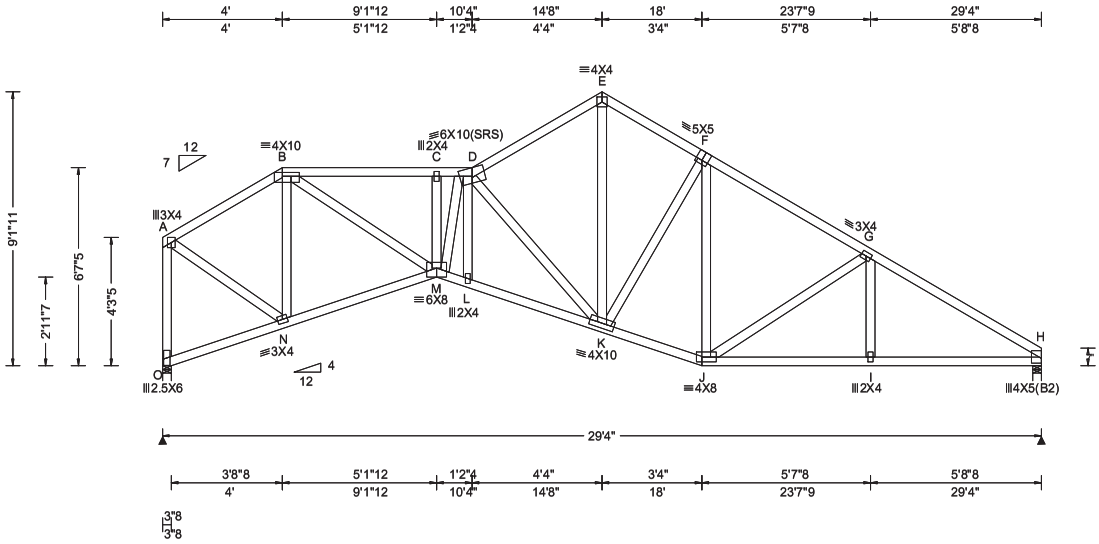

Loading Criteria (psf)

TCLL:	20.00
TCDL:	10.00
BCLL:	0.00
BCDL:	10.00
Des Ld:	40.00
NCBCLL:	10.00
Soffit:	2.00

Load Duration: 1.25
Spacing: 24.0 "

Wind Criteria
Wind Std: ASCE 7-16
Speed: 130 mph
Enclosure: Closed
Risk Category: II
EXP: C Kzt: NA
Mean Height: 15.00 ft
TCDL: 5.0 psf
BCDL: 5.0 psf
MWFRS Parallel Dist: h to 2h
C&C Dist a: 3.00 ft
Loc. from endwall: not in 9.00 ft
GCpi: 0.18
Wind Duration: 1.60

Snow Criteria (Pg,Pf in PSF)
Pg: NA Ct: NA CAT: NA
Pf: NA Ce: NA
Lu: NA Cs: NA
Snow Duration: NA

Building Code:
FBC 7th Ed. 2020 Res.
TPI Std: 2014
Rep Fac: Yes
FT/RT:20(0)/10(0)
Plate Type(s):
WAVE

Defl/CSI Criteria

PP Deflection in	loc	L/defl	L/#
VERT(LL): 0.087	D	999	240
VERT(CL): 0.183	D	999	180
HORZ(LL): 0.060	H	-	-
HORZ(TL): 0.126	H	-	-

Creep Factor: 2.0
Max TC CSI: 0.210
Max BC CSI: 0.334
Max Web CSI: 0.718

VIEW Ver: 21.01.01A.0521.20

▲Maximum Reactions (lbs)

	Gravity			Non-Gravity		
Loc	R+	/ R-	/ Rh	/ Rw	/ U	/ RL
O	1232	/-	/-	/639	/53	/220
H	1227	/-	/-	/725	/27	/-

Wind reactions based on MWFRS
O Brg Wid = 3.5 Min Req = 1.5
H Brg Wid = 3.5 Min Req = 1.5
Bearings O & H are a rigid surface.
Members not listed have forces less than 375#

Maximum Top Chord Forces Per Ply (lbs)

Chords	Tens.	Comp.	Chords	Tens.	Comp.
A - B	328	-1070	E - F	463	-1426
B - C	689	-2329	F - G	436	-1552
C - D	688	-2329	G - H	433	-1942
D - E	452	-1438			

Maximum Bot Chord Forces Per Ply (lbs)

Chords	Tens.	Comp.	Chords	Tens.	Comp.
N - M	935	-196	K - J	1341	-193
M - L	2332	-451	J - I	1588	-303
L - K	2340	-459	I - H	1589	-302

Maximum Web Forces Per Ply (lbs)

Webs	Tens.	Comp.	Webs	Tens.	Comp.
A - O	352	-1202	D - K	486	-1597
A - N	1060	-291	K - E	1133	-353
B - N	295	-760	J - G	149	-388
B - M	1735	-436			

Lumber

Top chord: 2x4 SP M-31;
Bot chord: 2x4 SP M-31;
Webs: 2x4 SP M-31;

Purlins

In lieu of structural panels use purlins to brace all flat TC @ 24" oc.

Wind

Wind loads based on MWFRS with additional C&C member design.

Left end vertical not exposed to wind pressure.

Wind loading based on both gable and hip roof types.

COA #0278
02/10/2023
Florida Certificate of Product Approval #FL 1999

****WARNING**** READ AND FOLLOW ALL NOTES ON THIS DRAWING!
****IMPORTANT**** FURNISH THIS DRAWING TO ALL CONTRACTORS INCLUDING THE INSTALLERS

Trusses require extreme care in fabricating, handling, shipping, installing and bracing. Refer to and follow the latest edition of BCSI (Building Component Safety Information, by TPI and SBCA) for safety practices prior to performing these functions. Installers shall provide temporary bracing per BCSI. Unless noted otherwise, top chord shall have properly attached structural sheathing and bottom chord shall have a properly attached rigid ceiling. Locations shown for permanent lateral restraint of webs shall have bracing installed per BCSI sections B3, B7, or B10, as applicable. Apply plates to each face of truss and position as shown above and on the Joint Details, unless noted otherwise. Refer to drawings 160A-Z for standard plate positions. Refer to job's General Notes page for additional information.

Alpine, a division of ITW Building Components Group Inc. shall not be responsible for any deviation from this drawing, any failure to build the truss in conformance with ANSI/TPI 1, or for handling, shipping, installation and bracing of trusses. A seal on this drawing or cover page listing this drawing, indicates acceptance of professional engineering responsibility solely for the design shown. The suitability and use of this drawing for any structure is the responsibility of the Building Designer per ANSI/TPI 1 Sec.2.

For more information see these web sites: Alpine: alpineitw.com; TPI: tpinst.org; SBCA: sbcacomponents.com; ICC: iccsafe.org; AWC: awc.org

ALPINE AN ITW COMPANY
6750 Forum Drive
Suite 305
Orlando FL, 32821

SEQN: 409483 / SPEC FROM: CDM	Ply: 1 Qty: 1	**Job Number:** 23-8926 Sunset 7 **Truss Label:** D12	Cust: R 215 JRef:1XN32150003 T37 DrwNo: 041.23.0912.20380 / WHK 02/10/2023

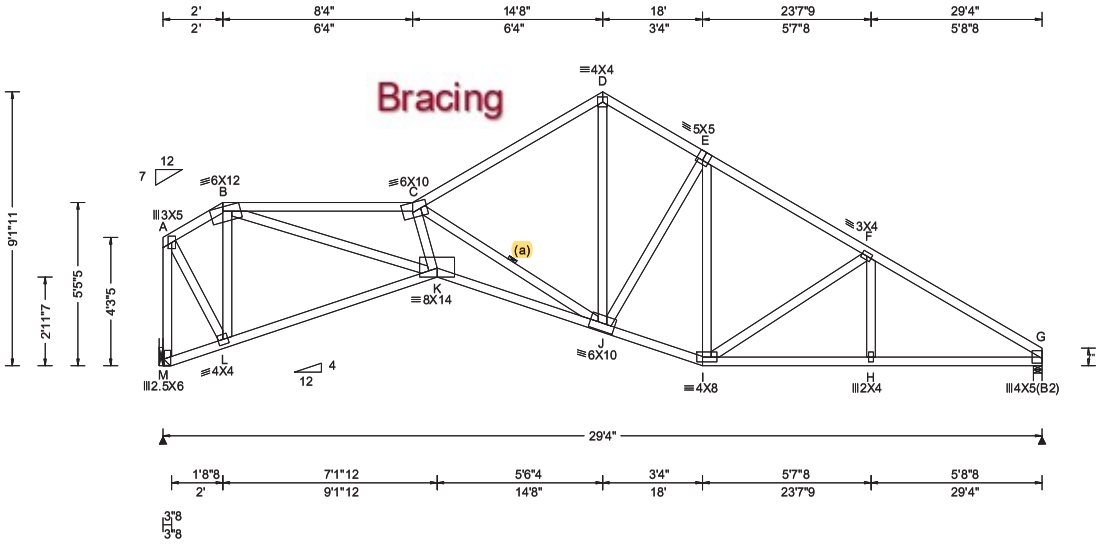

Loading Criteria (psf)

TCLL:	20.00
TCDL:	10.00
BCLL:	0.00
BCDL:	10.00
Des Ld:	40.00
NCBCLL:	10.00
Soffit:	2.00

Load Duration: 1.25
Spacing: 24.0 "

Wind Criteria
Wind Std: ASCE 7-16
Speed: 130 mph
Enclosure: Closed
Risk Category: II
EXP: C Kzt: NA
Mean Height: 15.00 ft
TCDL: 5.0 psf
BCDL: 5.0 psf
MWFRS Parallel Dist: h to 2h
C&C Dist a: 3.00 ft
Loc. from endwall: not in 9.00 ft
GCpi: 0.18
Wind Duration: 1.60

Snow Criteria (Pg,Pf in PSF)
Pg: NA Ct: NA CAT: NA
Pf: NA Ce: NA
Lu: NA Cs: NA
Snow Duration: NA

Building Code:
FBC 7th Ed. 2020 Res.
TPI Std: 2014
Rep Fac: Yes
FT/RT:20(0)/10(0)
Plate Type(s):
WAVE

Defl/CSI Criteria

PP Deflection in	loc	L/defl	L/#
VERT(LL): 0.208	K	999	240
VERT(CL): 0.435	K	807	180
HORZ(LL): 0.129	G	-	-
HORZ(TL): 0.270	G	-	-

Creep Factor: 2.0
Max TC CSI: 0.333
Max BC CSI: 0.428
Max Web CSI: 0.497

VIEW Ver: 21.01.01A.0521.20

▲Maximum Reactions (lbs)

Loc	Gravity R+	/ R-	/ Rh	Non-Gravity / Rw	/ U	/ RL
M	1232	/-	/-	/638	/63	/220
G	1227	/-	/-	/720	/16	/-

Wind reactions based on MWFRS
M Brg Wid = - Min Req = -
G Brg Wid = 3.5
Bearing G is a rigid surface.
Members not listed have forces less than 375#

Maximum Top Chord Forces Per Ply (lbs)

Chords	Tens.	Comp.	Chords	Tens.	Comp.
A - B	192	- 657	D - E	431	- 1431
B - C	958	- 3679	E - F	408	- 1550
C - D	414	- 1491	F - G	408	- 1943

Maximum Bot Chord Forces Per Ply (lbs)

Chords	Tens.	Comp.	Chords	Tens.	Comp.
L - K	611	- 104	I - H	1589	- 281
K - J	4141	- 810	H - G	1590	- 280
J - I	1342	- 168			

Maximum Web Forces Per Ply (lbs)

Webs	Tens.	Comp.	Webs	Tens.	Comp.
A - M	347	- 1266	C - K	724	0
A - L	1105	- 328	C - J	795	- 3217
B - L	394	- 960	J - D	1068	- 293
B - K	3258	- 784	I - F	153	- 393

Lumber

Top chord: 2x4 SP M-31;
Bot chord: 2x4 SP M-31;
Webs: 2x4 SP M-31;

Bracing

(a) Continuous lateral restraint equally spaced on member.

Hangers / Ties

Simpson Construction Hardware is specified based on the most current information provided by Simpson Strong-Tie. Please refer to the most recent Simpson Strong-Tie catalog for additional information.

Recommended hanger connections are based on manufacturer tested capacities and calculations. Conditions may exist that require different connections than indicated. Refer to manufacturer publication for additional information.

Bearing at location x=0' uses the following support conditions: 0'
Bearing M (0', 9'1"2) HUS28
Supporting Member: (1)2x8 SP #2
(22) 0.148"x3" nails into supporting member,
(4) 0.148"x3" nails into supported member.

Purlins

In lieu of structural panels use purlins to brace all flat TC @ 24" oc.

Wind

Wind loads based on MWFRS with additional C&C member design.

Left end vertical not exposed to wind pressure.

Wind loading based on both gable and hip roof types.

WILLIAM H. KRICK
LICENSE
No. 70861
STATE OF FLORIDA
PROFESSIONAL ENGINEER

COA #0278
02/10/2023
Florida Certificate of Product Approval #FL 1999

****WARNING**** READ AND FOLLOW ALL NOTES ON THIS DRAWING!
****IMPORTANT**** FURNISH THIS DRAWING TO ALL CONTRACTORS INCLUDING THE INSTALLERS

Trusses require extreme care in fabricating, handling, shipping, installing and bracing. Refer to and follow the latest edition of BCSI (Building Component Safety Information, by TPI and SBCA) for safety practices prior to performing these functions. Installers shall provide temporary bracing per BCSI. Unless noted otherwise, top chord shall have properly attached structural sheathing and bottom chord shall have a properly attached rigid ceiling. Locations shown for permanent lateral restraint of webs shall have bracing installed per BCSI sections B3, B7, or B10, as applicable. Apply plates to each face of truss and position as shown above and on the Joint Details, unless noted otherwise. Refer to drawings 160A-Z for standard plate positions. Refer to job's General Notes page for additional information.

Alpine, a division of ITW Building Components Group Inc. shall not be responsible for any deviation from this drawing, any failure to build the truss in conformance with ANSI/TPI 1, or for handling, shipping, installation and bracing of trusses. A seal on this drawing or cover page listing this drawing, indicates acceptance of professional engineering responsibility solely for the design shown. The suitability and use of this drawing for any structure is the responsibility of the Building Designer per ANSI/TPI 1 Sec.2.

For more information see these web sites: Alpine: alpineitw.com; TPI: tpinst.org; SBCA: sbcacomponents.com; ICC: iccsafe.org; AWC: awc.org

ALPINE AN ITW COMPANY
6750 Forum Drive
Suite 305
Orlando FL, 32821

SEQN: 409484 / SPEC FROM: CDM	Ply: 1 Qty: 1	**Job Number:** 23-8926 Sunset 7 **Truss Label:** D13	Cust: R 215 JRef:1XN32150003 T5 DrwNo: 041.23.0912.19088 / WHK 02/10/2023

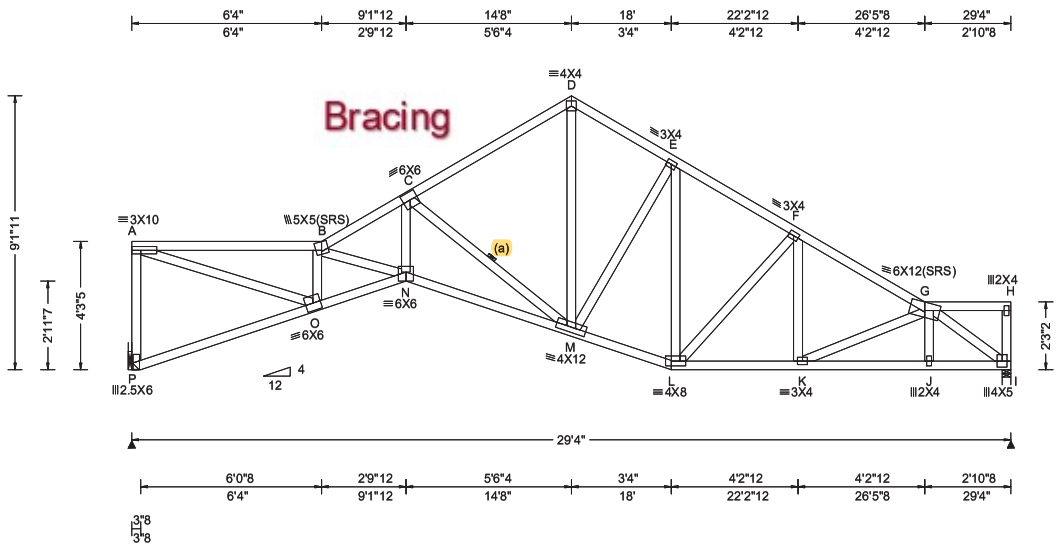

Loading Criteria (psf)		**Wind Criteria**	**Snow Criteria** (Pg,Pf in PSF)	**Defl/CSI Criteria**				
TCLL:	20.00	Wind Std: ASCE 7-16	Pg: NA Ct: NA CAT: NA	PP Deflection in	loc	L/defl	L/#	
TCDL:	10.00	Speed: 130 mph	Pf: NA Ce: NA	VERT(LL):	0.161 N	999	240	
BCLL:	0.00	Enclosure: Closed	Lu: NA Cs: NA	VERT(CL):	0.337 N	999	180	
BCDL:	10.00	Risk Category: II	Snow Duration: NA	HORZ(LL):	0.101 I	-	-	
Des Ld:	40.00	EXP: C Kzt: NA		HORZ(TL):	0.212 I	-	-	
NCBCLL:	10.00	Mean Height: 15.00 ft	Building Code:	Creep Factor: 2.0				
Soffit:	2.00	TCDL: 5.0 psf	FBC 7th Ed. 2020 Res.	Max TC CSI:	0.419			
Load Duration: 1.25		BCDL: 5.0 psf	TPI Std: 2014	Max BC CSI:	0.326			
Spacing: 24.0 "		MWFRS Parallel Dist: h to 2h	Rep Fac: Yes	Max Web CSI:	0.317			
		C&C Dist a: 3.00 ft	FT/RT:20(0)/10(0)					
		Loc. from endwall: not in 9.00 ft	Plate Type(s):					
		GCpi: 0.18	WAVE	VIEW Ver: 21.01.01A.0521.20				
		Wind Duration: 1.60						

▲Maximum Reactions (lbs)

	Gravity			Non-Gravity		
Loc	R+	/ R-	/ Rh	/ Rw	/ U	/ RL
P	1233	/-	/-	/639	/72	/177
I	1226	/-	/-	/674	/12	/-

Wind reactions based on MWFRS
P Brg Wid = - Min Req = -
I Brg Wid = 3.5
Bearing I is a rigid surface.
Members not listed have forces less than 375#

Maximum Top Chord Forces Per Ply (lbs)

Chords	Tens.	Comp.	Chords	Tens.	Comp.
A - B	755	-2968	D - E	411	-1426
B - C	791	-3463	E - F	398	-1523
C - D	397	-1473	F - G	405	-1830

Maximum Bot Chord Forces Per Ply (lbs)

Chords	Tens.	Comp.	Chords	Tens.	Comp.
O - N	3382	-801	L - K	1523	-297
N - M	3060	-585	K - J	1638	-383
M - L	1337	-211	J - I	1642	-380

Maximum Web Forces Per Ply (lbs)

Webs	Tens.	Comp.	Webs	Tens.	Comp.
A - P	415	-1173	C - M	531	-2199
A - O	3130	-796	M - D	1083	-271
O - B	597	-1965	L - F	148	-396
N - C	2184	-465	G - I	456	-1979

Lumber

Top chord: 2x4 SP M-31;
Bot chord: 2x4 SP M-31;
Webs: 2x4 SP M-31;

Bracing

(a) Continuous lateral restraint equally spaced on member.

Hangers / Ties

Simpson Construction Hardware is specified based on the most current information provided by Simpson Strong-Tie. Please refer to the most recent Simpson Strong-Tie catalog for additional information.

Recommended hanger connections are based on manufacturer tested capacities and calculations. Conditions may exist that require different connections than indicated. Refer to manufacturer publication for additional information.

Bearing at location x=0' uses the following support conditions: 0'
Bearing P (0', 9'1"2) HUS28
Supporting Member: (1)2x8 SP #2
(22) 0.148"x3" nails into supporting member,
(4) 0.148"x3" nails into supported member.

Purlins

In lieu of structural panels use purlins to brace all flat TC @ 24" oc.

Wind

Wind loads based on MWFRS with additional C&C member design.

End verticals not exposed to wind pressure.

Wind loading based on both gable and hip roof types.

Deflection

Max JT VERT DEFL: LL: 0.16" DL: 0.18". See detail DEFLCAMB1014 for camber recommendations. Provide for adequate drainage of roof.

WILLIAM H. KRICK
LICENSE
No. 70861
STATE OF FLORIDA
PROFESSIONAL ENGINEER

COA #0278
02/10/2023
Florida Certificate of Product Approval #FL 1999

****WARNING**** READ AND FOLLOW ALL NOTES ON THIS DRAWING!
****IMPORTANT**** FURNISH THIS DRAWING TO ALL CONTRACTORS INCLUDING THE INSTALLERS

Trusses require extreme care in fabricating, handling, shipping, installing and bracing. Refer to and follow the latest edition of BCSI (Building Component Safety Information, by TPI and SBCA) for safety practices prior to performing these functions. Installers shall provide temporary bracing per BCSI. Unless noted otherwise, top chord shall have properly attached structural sheathing and bottom chord shall have a properly attached rigid ceiling. Locations shown for permanent lateral restraint of webs shall have bracing installed per BCSI sections B3, B7, or B10, as applicable. Apply plates to each face of truss and position as shown above and on the Joint Details, unless noted otherwise. Refer to drawings 160A-Z for standard plate positions. Refer to job's General Notes page for additional information.

Alpine, a division of ITW Building Components Group Inc. shall not be responsible for any deviation from this drawing, any failure to build the truss in conformance with ANSI/TPI 1, or for handling, shipping, installation and bracing of trusses. A seal on this drawing or cover page listing this drawing, indicates acceptance of professional engineering responsibility solely for the design shown. The suitability and use of this drawing for any structure is the responsibility of the Building Designer per ANSI/TPI 1 Sec.2.

For more information see these web sites: Alpine: alpineitw.com; TPI: tpinst.org; SBCA: sbcacomponents.com; ICC: iccsafe.org; AWC: awc.org

ALPINE AN ITW COMPANY
6750 Forum Drive
Suite 305
Orlando FL, 32821

SEQN: 409485 / SPEC FROM: CDM	Ply: 1 Qty: 1	**Job Number:** 23-8926 Sunset 7 **Truss Label:** D14	Cust: R 215 JRef:1XN32150003 T39 DrwNo: 041.23.0912.19498 / WHK 02/10/2023

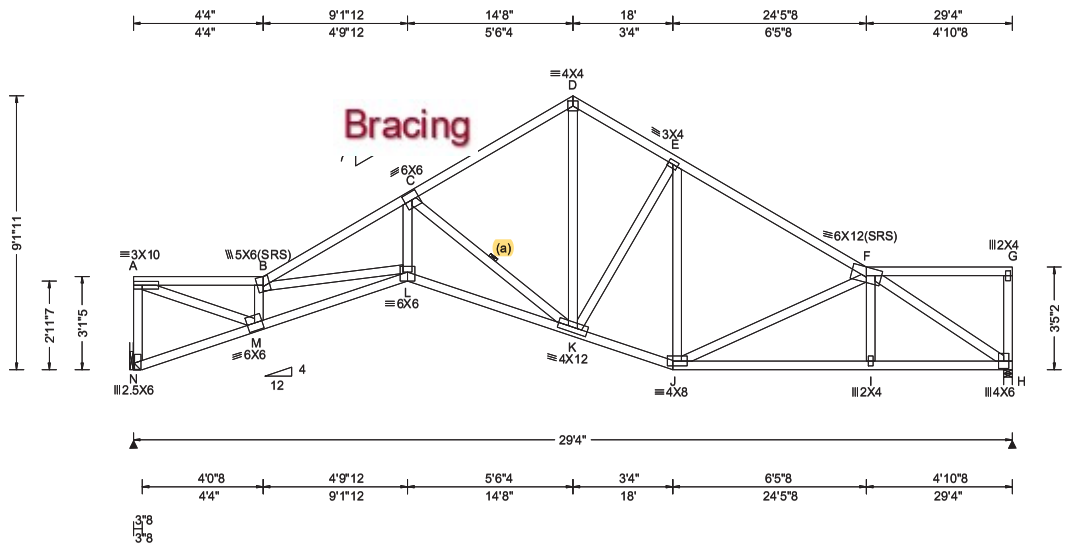

Loading Criteria (psf)

TCLL: 20.00
TCDL: 10.00
BCLL: 0.00
BCDL: 10.00
Des Ld: 40.00
NCBCLL: 10.00
Soffit: 2.00
Load Duration: 1.25
Spacing: 24.0 "

Wind Criteria

Wind Std: ASCE 7-16
Speed: 130 mph
Enclosure: Closed
Risk Category: II
EXP: C Kzt: NA
Mean Height: 15.22 ft
TCDL: 5.0 psf
BCDL: 5.0 psf
MWFRS Parallel Dist: h to 2h
C&C Dist a: 3.00 ft
Loc. from endwall: not in 9.00 ft
GCpi: 0.18
Wind Duration: 1.60

Snow Criteria (Pg,Pf in PSF)

Pg: NA Ct: NA CAT: NA
Pf: NA Ce: NA
Lu: NA Cs: NA
Snow Duration: NA

Building Code:
FBC 7th Ed. 2020 Res.
TPI Std: 2014
Rep Fac: Yes
FT/RT:20(0)/10(0)
Plate Type(s):
WAVE

Defl/CSI Criteria

PP Deflection in	loc	L/defl	L/#
VERT(LL): 0.161	L	999	240
VERT(CL): 0.338	L	999	180
HORZ(LL): 0.106	H	-	-
HORZ(TL): 0.222	H	-	-

Creep Factor: 2.0
Max TC CSI: 0.189
Max BC CSI: 0.356
Max Web CSI: 0.592

VIEW Ver: 21.01.01A.0521.20

▲Maximum Reactions (lbs)

Loc	Gravity R+	/ R-	/ Rh	Non-Gravity / Rw	/ U	/ RL
N	1233	/-	/-	/652	/29	/155
H	1226	/-	/-	/643	/43	/-

Wind reactions based on MWFRS
N Brg Wid = - Min Req = -
H Brg Wid = 3.5
Bearing H is a rigid surface.
Members not listed have forces less than 375#

Maximum Top Chord Forces Per Ply (lbs)

Chords	Tens.	Comp.	Chords	Tens.	Comp.
A - B	706	-2826	D - E	426	-1441
B - C	785	-3515	E - F	388	-1577
C - D	406	-1475			

Maximum Bot Chord Forces Per Ply (lbs)

Chords	Tens.	Comp.	Chords	Tens.	Comp.
M - L	3337	-865	J - I	1663	-436
L - K	3097	-660	I - H	1668	-433
K - J	1355	-268			

Maximum Web Forces Per Ply (lbs)

Webs	Tens.	Comp.	Webs	Tens.	Comp.
A - N	380	-1188	C - K	566	-2249
A - M	3009	-749	K - D	1136	-306
M - B	596	-2050	J - F	208	-430
L - C	2126	-415	F - H	508	-1971

Lumber

Top chord: 2x4 SP M-31;
Bot chord: 2x4 SP M-31;
Webs: 2x4 SP M-31;

Bracing

(a) Continuous lateral restraint equally spaced on member.

Hangers / Ties

Simpson Construction Hardware is specified based on the most current information provided by Simpson Strong-Tie. Please refer to the most recent Simpson Strong-Tie catalog for additional information.

Recommended hanger connections are based on manufacturer tested capacities and calculations. Conditions may exist that require different connections than indicated. Refer to manufacturer publication for additional information.

Bearing at location x=0' uses the following support conditions: 0'
Bearing N (0', 9'1"2) HUS28
Supporting Member: (1)2x8 SP #2
(22) 0.148"x3" nails into supporting member,
(4) 0.148"x3" nails into supported member.

Purlins

In lieu of structural panels use purlins to brace all flat TC @ 24" oc.

Wind

Wind loads based on MWFRS with additional C&C member design.

End verticals not exposed to wind pressure.

Wind loading based on both gable and hip roof types.

Deflection

Max JT VERT DEFL: LL: 0.16" DL: 0.18". See detail DEFLCAMB1014 for camber recommendations. Provide for adequate drainage of roof.

WILLIAM H. KRICK
LICENSE
No. 70861
STATE OF FLORIDA
PROFESSIONAL ENGINEER

COA #0278
02/10/2023

Florida Certificate of Product Approval #FL 1999

****WARNING**** READ AND FOLLOW ALL NOTES ON THIS DRAWING!
****IMPORTANT**** FURNISH THIS DRAWING TO ALL CONTRACTORS INCLUDING THE INSTALLERS

Trusses require extreme care in fabricating, handling, shipping, installing and bracing. Refer to and follow the latest edition of BCSI (Building Component Safety Information, by TPI and SBCA) for safety practices prior to performing these functions. Installers shall provide temporary bracing per BCSI. Unless noted otherwise, top chord shall have properly attached structural sheathing and bottom chord shall have a properly attached rigid ceiling. Locations shown for permanent lateral restraint of webs shall have bracing installed per BCSI sections B3, B7, or B10, as applicable. Apply plates to each face of truss and position as shown above and on the Joint Details, unless noted otherwise. Refer to drawings 160A-Z for standard plate positions. Refer to job's General Notes page for additional information.

Alpine, a division of ITW Building Components Group Inc. shall not be responsible for any deviation from this drawing, any failure to build the truss in conformance with ANSI/TPI 1, or for handling, shipping, installation and bracing of trusses. A seal on this drawing or cover page listing this drawing, indicates acceptance of professional engineering responsibility solely for the design shown. The suitability and use of this drawing for any structure is the responsibility of the Building Designer per ANSI/TPI 1 Sec.2.

For more information see these web sites: Alpine: alpineitw.com; TPI: tpinst.org; SBCA: sbcacomponents.com; ICC: iccsafe.org; AWC: awc.org

ALPINE AN ITW COMPANY
6750 Forum Drive
Suite 305
Orlando FL, 32821

SEQN: 409486 / SPEC FROM: CDM	Ply: 1 Qty: 1	**Job Number:** 23-8926 Sunset 7 **Truss Label:** D15	Cust: R 215 JRef:1XN32150003 T40 DrwNo: 041.23.0912.20654 / WHK 02/10/2023

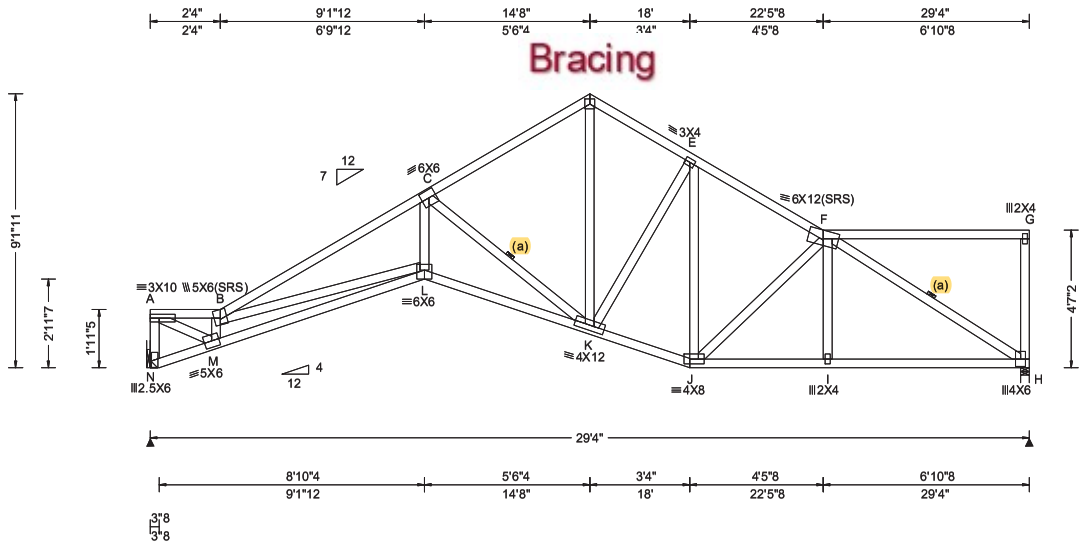

Loading Criteria (psf)

TCLL: 20.00
TCDL: 10.00
BCLL: 0.00
BCDL: 10.00
Des Ld: 40.00
NCBCLL: 10.00
Soffit: 2.00
Load Duration: 1.25
Spacing: 24.0 "

Wind Criteria

Wind Std: ASCE 7-16
Speed: 130 mph
Enclosure: Closed
Risk Category: II
EXP: C Kzt: NA
Mean Height: 15.00 ft
TCDL: 5.0 psf
BCDL: 5.0 psf
MWFRS Parallel Dist: h to 2h
C&C Dist a: 3.00 ft
Loc. from endwall: not in 9.00 ft
GCpi: 0.18
Wind Duration: 1.60

Snow Criteria (Pg,Pf in PSF)

Pg: NA Ct: NA CAT: NA
Pf: NA Ce: NA
Lu: NA Cs: NA
Snow Duration: NA

Building Code:
FBC 7th Ed. 2020 Res.
TPI Std: 2014
Rep Fac: Yes
FT/RT:20(0)/10(0)
Plate Type(s):
WAVE

Defl/CSI Criteria

PP Deflection in	loc	L/defl	L/#
VERT(LL): 0.158	L	999	240
VERT(CL): 0.330	L	999	180
HORZ(LL): 0.107	H	-	-
HORZ(TL): 0.224	H	-	-

Creep Factor: 2.0
Max TC CSI: 0.383
Max BC CSI: 0.372
Max Web CSI: 0.330

VIEW Ver: 21.01.01A.0521.20

▲Maximum Reactions (lbs)

	Gravity			Non-Gravity		
Loc	R+	/ R-	/ Rh	/ Rw	/ U	/ RL
N	1233	/-	/-	/684	/9	/185
H	1226	/-	/-	/643	/84	/-

Wind reactions based on MWFRS
N Brg Wid = - Min Req = -
H Brg Wid = 3.5
Bearing H is a rigid surface.
Members not listed have forces less than 375#

Maximum Top Chord Forces Per Ply (lbs)

Chords	Tens.	Comp.	Chords	Tens.	Comp.
A - B	580	-2398	D - E	427	-1422
B - C	829	-3597	E - F	427	-1537
C - D	425	-1482			

Maximum Bot Chord Forces Per Ply (lbs)

Chords	Tens.	Comp.	Chords	Tens.	Comp.
M - L	3068	-878	J - I	1570	-462
L - K	3143	-763	I - H	1574	-460
K - J	1334	-315			

Maximum Web Forces Per Ply (lbs)

Webs	Tens.	Comp.	Webs	Tens.	Comp.
A - N	319	-1215	C - K	621	-2304
A - M	2677	-646	K - D	1116	-306
M - B	627	-2122	J - F	237	-442
L - C	2111	-427	F - H	542	-1856

Lumber

Top chord: 2x4 SP M-31;
Bot chord: 2x4 SP M-31;
Webs: 2x4 SP M-31;

Bracing

(a) Continuous lateral restraint equally spaced on member.

Hangers / Ties

Simpson Construction Hardware is specified based on the most current information provided by Simpson Strong-Tie. Please refer to the most recent Simpson Strong-Tie catalog for additional information.

Recommended hanger connections are based on manufacturer tested capacities and calculations. Conditions may exist that require different connections than indicated. Refer to manufacturer publication for additional information.

Bearing at location x=0' uses the following support conditions: 0'
Bearing N (0', 9'1"2) HUS28
Supporting Member: (1)2x8 SP #2
(22) 0.148"x3" nails into supporting member,
(4) 0.148"x3" nails into supported member.

Purlins

In lieu of structural panels use purlins to brace all flat TC @ 24" oc.

Wind

Wind loads based on MWFRS with additional C&C member design.

End verticals not exposed to wind pressure.

Wind loading based on both gable and hip roof types.

Deflection

Max JT VERT DEFL: LL: 0.16" DL: 0.17". See detail DEFLCAMB1014 for camber recommendations. Provide for adequate drainage of roof.

WILLIAM H. KRICK
LICENSE
No. 70861
STATE OF FLORIDA
PROFESSIONAL ENGINEER

COA #0278

02/10/2023

Florida Certificate of Product Approval #FL 1999

****WARNING**** READ AND FOLLOW ALL NOTES ON THIS DRAWING!
****IMPORTANT**** FURNISH THIS DRAWING TO ALL CONTRACTORS INCLUDING THE INSTALLERS

Trusses require extreme care in fabricating, handling, shipping, installing and bracing. Refer to and follow the latest edition of BCSI (Building Component Safety Information, by TPI and SBCA) for safety practices prior to performing these functions. Installers shall provide temporary bracing per BCSI. Unless noted otherwise, top chord shall have properly attached structural sheathing and bottom chord shall have a properly attached rigid ceiling. Locations shown for permanent lateral restraint of webs shall have bracing installed per BCSI sections B3, B7, or B10, as applicable. Apply plates to each face of truss and position as shown above and on the Joint Details, unless noted otherwise. Refer to drawings 160A-Z for standard plate positions. Refer to job's General Notes page for additional information.

Alpine, a division of ITW Building Components Group Inc. shall not be responsible for any deviation from this drawing, any failure to build the truss in conformance with ANSI/TPI 1, or for handling, shipping, installation and bracing of trusses. A seal on this drawing or cover page listing this drawing, indicates acceptance of professional engineering responsibility solely for the design shown. The suitability and use of this drawing for any structure is the responsibility of the Building Designer per ANSI/TPI 1 Sec.2.

For more information see these web sites: Alpine: alpineitw.com; TPI: tpinst.org; SBCA: sbcacomponents.com; ICC: iccsafe.org; AWC: awc.org

ALPINE AN ITW COMPANY
6750 Forum Drive
Suite 305
Orlando FL, 32821

SEQN: 409487 / SPEC FROM: CDM	Ply: 1 Qty: 1	**Job Number:** 23-8926 Sunset 7 **Truss Label:** D16	Cust: R 215 JRef:1XN32150003 T28 DrwNo: 041.23.0912.21666 / WHK 02/10/2023

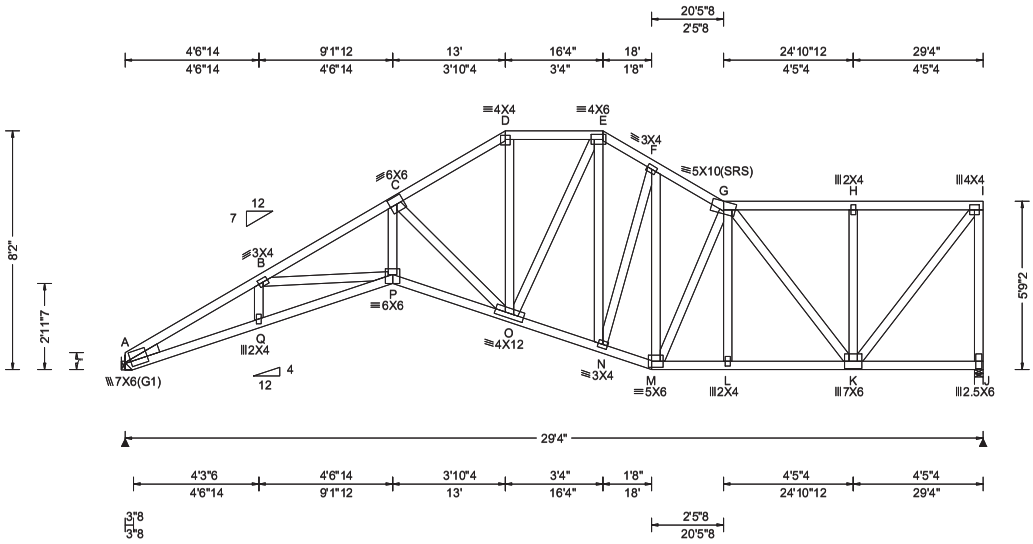

Loading Criteria (psf)			
TCLL:	20.00		
TCDL:	10.00		
BCLL:	0.00		
BCDL:	10.00		
Des Ld:	40.00		
NCBCLL:	10.00		
Soffit:	2.00		
Load Duration: 1.25			
Spacing: 24.0 "			

Wind Criteria
Wind Std: ASCE 7-16
Speed: 130 mph
Enclosure: Closed
Risk Category: II
EXP: C Kzt: NA
Mean Height: 15.00 ft
TCDL: 5.0 psf
BCDL: 5.0 psf
MWFRS Parallel Dist: h/2 to h
C&C Dist a: 3.00 ft
Loc. from endwall: not in 9.00 ft
GCpi: 0.18
Wind Duration: 1.60

Snow Criteria (Pg,Pf in PSF)
Pg: NA Ct: NA CAT: NA
Pf: NA Ce: NA
Lu: NA Cs: NA
Snow Duration: NA

Building Code:
FBC 7th Ed. 2020 Res.
TPI Std: 2014
Rep Fac: Yes
FT/RT:20(0)/10(0)
Plate Type(s):
WAVE

Defl/CSI Criteria

PP Deflection in	loc	L/defl	L/#
VERT(LL): 0.163	P	999	240
VERT(CL): 0.341	P	999	180
HORZ(LL): 0.106	K	-	-
HORZ(TL): 0.222	K	-	-

Creep Factor: 2.0
Max TC CSI: 0.228
Max BC CSI: 0.426
Max Web CSI: 0.651

VIEW Ver: 21.01.01A.0521.20

▲Maximum Reactions (lbs)

	Gravity			Non-Gravity		
Loc	R+	/ R-	/ Rh	/ Rw	/ U	/ RL
A	1233	/-	/-	/728	/183	/195
J	1226	/-	/-	/647	/231	/-

Wind reactions based on MWFRS
A Brg Wid = - Min Req = -
J Brg Wid = 3.5
Bearing J is a rigid surface.
Members not listed have forces less than 375#

Maximum Top Chord Forces Per Ply (lbs)

Chords	Tens.	Comp.	Chords	Tens.	Comp.
A - B	1112	-3759	E - F	583	-1444
B - C	1134	-3492	F - G	568	-1485
C - D	641	-1731	G - H	374	-876
D - E	586	-1448	H - I	373	-876

Maximum Bot Chord Forces Per Ply (lbs)

Chords	Tens.	Comp.	Chords	Tens.	Comp.
A - Q	3269	-1129	N - M	1321	-482
Q - P	3317	-1147	M - L	1402	-541
P - O	3071	-1054	L - K	1404	-540
O - N	1305	-465			

Maximum Web Forces Per Ply (lbs)

Webs	Tens.	Comp.	Webs	Tens.	Comp.
P - C	2110	-652	M - G	211	-377
C - O	715	-2104	G - K	263	-836
D - O	615	-171	K - I	1390	-593
O - E	484	-137	I - J	562	-1189

Lumber

Top chord: 2x4 SP M-31;
Bot chord: 2x4 SP M-31;
Webs: 2x4 SP M-31;
Lt Stub Wedge: 2x4 SP M-31;

Hangers / Ties

Simpson Construction Hardware is specified based on the most current information provided by Simpson Strong-Tie. Please refer to the most recent Simpson Strong-Tie catalog for additional information.

Recommended hanger connections are based on manufacturer tested capacities and calculations. Conditions may exist that require different connections than indicated. Refer to manufacturer publication for additional information.

Bearing at location x=0' uses the following support conditions: 0'
Bearing A (0', 9'1"2) HUS28
Supporting Member: (1)2x8 SP #2
(22) 0.148"x3" nails into supporting member,
(4) 0.148"x3" nails into supported member.

Purlins

In lieu of structural panels use purlins to brace all flat TC @ 24" oc.

Wind

Wind loads based on MWFRS with additional C&C member design.

Right end vertical not exposed to wind pressure.

Wind loading based on both gable and hip roof types.

WILLIAM H. KRICK
LICENSE
No. 70861
STATE OF FLORIDA
PROFESSIONAL ENGINEER

COA #0278

02/10/2023

Florida Certificate of Product Approval #FL 1999

****WARNING**** READ AND FOLLOW ALL NOTES ON THIS DRAWING!
****IMPORTANT**** FURNISH THIS DRAWING TO ALL CONTRACTORS INCLUDING THE INSTALLERS

Trusses require extreme care in fabricating, handling, shipping, installing and bracing. Refer to and follow the latest edition of BCSI (Building Component Safety Information, by TPI and SBCA) for safety practices prior to performing these functions. Installers shall provide temporary bracing per BCSI. Unless noted otherwise, top chord shall have properly attached structural sheathing and bottom chord shall have a properly attached rigid ceiling. Locations shown for permanent lateral restraint of webs shall have bracing installed per BCSI sections B3, B7, or B10, as applicable. Apply plates to each face of truss and position as shown above and on the Joint Details, unless noted otherwise. Refer to drawings 160A-Z for standard plate positions. Refer to job's General Notes page for additional information.

Alpine, a division of ITW Building Components Group Inc. shall not be responsible for any deviation from this drawing, any failure to build the truss in conformance with ANSI/TPI 1, or for handling, shipping, installation and bracing of trusses. A seal on this drawing or cover page listing this drawing, indicates acceptance of professional engineering responsibility solely for the design shown. The suitability and use of this drawing for any structure is the responsibility of the Building Designer per ANSI/TPI 1 Sec.2.

For more information see these web sites: Alpine: alpineitw.com; TPI: tpinst.org; SBCA: sbcacomponents.com; ICC: iccsafe.org; AWC: awc.org

ALPINE AN ITW COMPANY
6750 Forum Drive
Suite 305
Orlando FL, 32821

SEQN: 409488 / SPEC FROM: CDM	Ply: 1 Qty: 1	**Job Number:** 23-8926 Sunset 7 **Truss Label:** D17	Cust: R 215 JRef:1XN32150003 T41 DrwNo: 041.23.0912.20046 / WHK 02/10/2023

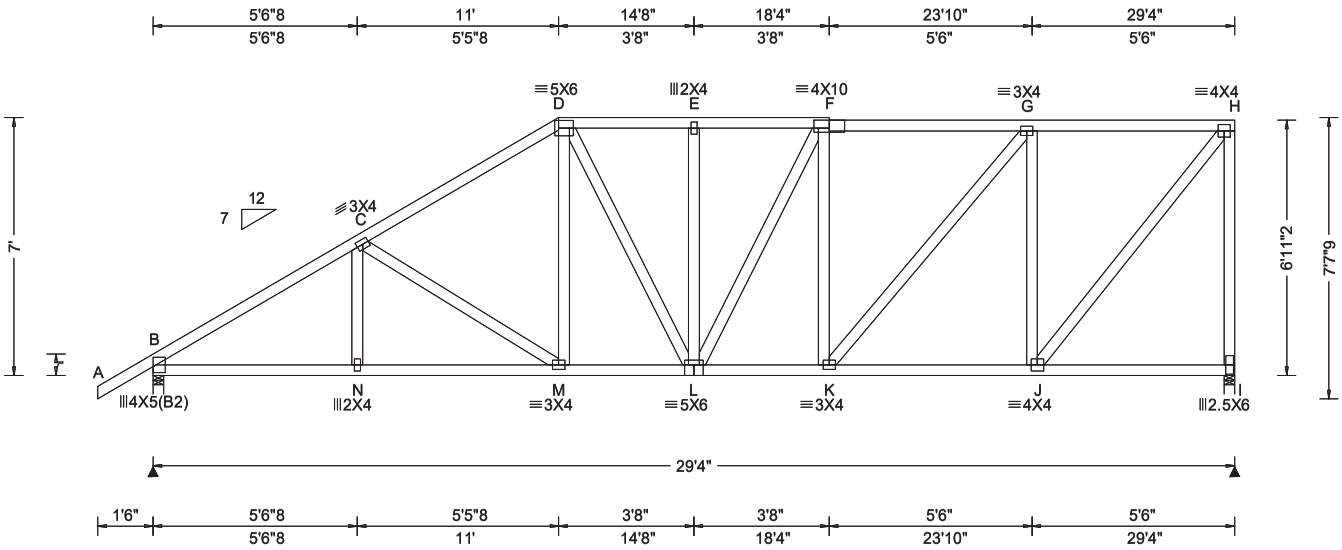

Loading Criteria (psf)

TCLL:	20.00
TCDL:	10.00
BCLL:	0.00
BCDL:	10.00
Des Ld:	40.00
NCBCLL:	10.00
Soffit:	2.00

Load Duration: 1.25
Spacing: 24.0 "

Wind Criteria
Wind Std: ASCE 7-16
Speed: 130 mph
Enclosure: Closed
Risk Category: II
EXP: C Kzt: NA
Mean Height: 15.00 ft
TCDL: 5.0 psf
BCDL: 5.0 psf
MWFRS Parallel Dist: h/2 to h
C&C Dist a: 3.00 ft
Loc. from endwall: not in 9.00 ft
GCpi: 0.18
Wind Duration: 1.60

Snow Criteria (Pg,Pf in PSF)
Pg: NA Ct: NA CAT: NA
Pf: NA Ce: NA
Lu: NA Cs: NA
Snow Duration: NA

Building Code:
FBC 7th Ed. 2020 Res.
TPI Std: 2014
Rep Fac: Yes
FT/RT:20(0)/10(0)
Plate Type(s):
WAVE

Defl/CSI Criteria

PP Deflection in	loc	L/defl	L/#
VERT(LL): 0.058	M	999	240
VERT(CL): 0.119	M	999	180
HORZ(LL): 0.021	J	-	-
HORZ(TL): 0.044	J	-	-

Creep Factor: 2.0
Max TC CSI: 0.246
Max BC CSI: 0.351
Max Web CSI: 0.522

VIEW Ver: 21.01.01A.0521.20

▲Maximum Reactions (lbs)

	Gravity			Non-Gravity		
Loc	R+	/ R-	/ Rh	/ Rw	/ U	/ RL
B	1326	/-	/-	/813	/137	/251
I	1215	/-	/-	/631	/-	/-

Wind reactions based on MWFRS
B Brg Wid = 3.5 Min Req = 1.5
I Brg Wid = 3.5 Min Req = 1.5
Bearings B & I are a rigid surface.
Members not listed have forces less than 375#

Maximum Top Chord Forces Per Ply (lbs)

Chords	Tens.	Comp.	Chords	Tens.	Comp.
B - C	528	- 1910	E - F	558	- 1333
C - D	549	- 1552	F - G	510	- 1268
D - E	557	- 1333	G - H	362	- 833

Maximum Bot Chord Forces Per Ply (lbs)

Chords	Tens.	Comp.	Chords	Tens.	Comp.
B - N	1557	- 615	L - K	1267	- 509
N - M	1556	- 616	K - J	873	- 385
M - L	1266	- 517			

Maximum Web Forces Per Ply (lbs)

Webs	Tens.	Comp.	Webs	Tens.	Comp.
F - K	336	- 392	J - H	1326	- 577
K - G	628	- 372	H - I	583	- 1173
G - J	514	- 907			

Lumber

Top chord: 2x4 SP M-31;
Bot chord: 2x4 SP M-31;
Webs: 2x4 SP M-31;

Purlins

In lieu of structural panels use purlins to brace all flat TC @ 24" oc.

Wind

Wind loads based on MWFRS with additional C&C member design.

Right end vertical not exposed to wind pressure.

Wind loading based on both gable and hip roof types.

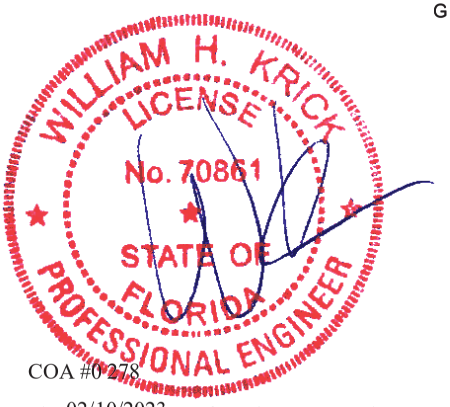

COA #0278
02/10/2023
Florida Certificate of Product Approval #FL 1999

****WARNING**** READ AND FOLLOW ALL NOTES ON THIS DRAWING!
****IMPORTANT**** FURNISH THIS DRAWING TO ALL CONTRACTORS INCLUDING THE INSTALLERS

Trusses require extreme care in fabricating, handling, shipping, installing and bracing. Refer to and follow the latest edition of BCSI (Building Component Safety Information, by TPI and SBCA) for safety practices prior to performing these functions. Installers shall provide temporary bracing per BCSI. Unless noted otherwise, top chord shall have properly attached structural sheathing and bottom chord shall have a properly attached rigid ceiling. Locations shown for permanent lateral restraint of webs shall have bracing installed per BCSI sections B3, B7, or B10, as applicable. Apply plates to each face of truss and position as shown above and on the Joint Details, unless noted otherwise. Refer to drawings 160A-Z for standard plate positions. Refer to job's General Notes page for additional information.

Alpine, a division of ITW Building Components Group Inc. shall not be responsible for any deviation from this drawing, any failure to build the truss in conformance with ANSI/TPI 1, or for handling, shipping, installation and bracing of trusses. A seal on this drawing or cover page listing this drawing, indicates acceptance of professional engineering responsibility solely for the design shown. The suitability and use of this drawing for any structure is the responsibility of the Building Designer per ANSI/TPI 1 Sec.2.

For more information see these web sites: Alpine: alpineitw.com; TPI: tpinst.org; SBCA: sbcacomponents.com; ICC: iccsafe.org; AWC: awc.org

ALPINE AN ITW COMPANY
6750 Forum Drive
Suite 305
Orlando FL, 32821

SEQN: 409489 / HIPM FROM: CDM	Ply: 1 Qty: 1	**Job Number:** 23-8926 Sunset 7 **Truss Label:** D18	Cust: R 215 JRef:1XN32150003 T7 DrwNo: 041.23.0912.22164 / WHK 02/10/2023

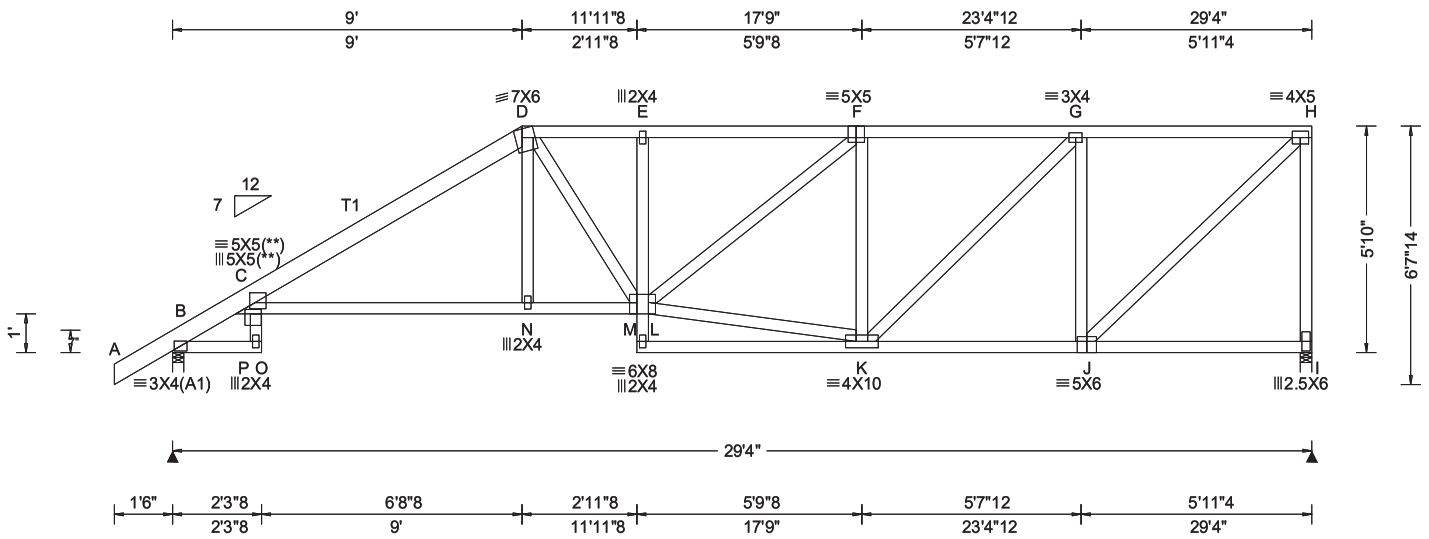

Loading Criteria (psf)

TCLL:	20.00
TCDL:	10.00
BCLL:	0.00
BCDL:	10.00
Des Ld:	40.00
NCBCLL:	10.00
Soffit:	2.00

Load Duration: 1.25
Spacing: 24.0 "

Wind Criteria
Wind Std: ASCE 7-16
Speed: 130 mph
Enclosure: Closed
Risk Category: II
EXP: C Kzt: NA
Mean Height: 15.00 ft
TCDL: 5.0 psf
BCDL: 5.0 psf
MWFRS Parallel Dist: 0 to h/2
C&C Dist a: 3.00 ft
Loc. from endwall: not in 4.50 ft
GCpi: 0.18
Wind Duration: 1.60

Snow Criteria (Pg,Pf in PSF)
Pg: NA Ct: NA CAT: NA
Pf: NA Ce: NA
Lu: NA Cs: NA
Snow Duration: NA

Building Code:
FBC 7th Ed. 2020 Res.
TPI Std: 2014
Rep Fac: Yes
FT/RT:20(0)/10(0)
Plate Type(s):
WAVE

Defl/CSI Criteria

PP Deflection in	loc	L/defl	L/#
VERT(LL):	0.216 O	999	240
VERT(CL):	0.444 O	788	180
HORZ(LL):	0.163 J	-	-
HORZ(TL):	0.336 J	-	-

Creep Factor: 2.0
Max TC CSI: 0.604
Max BC CSI: 0.300
Max Web CSI: 0.487

VIEW Ver: 21.01.01A.0521.20

▲Maximum Reactions (lbs)

	Gravity			Non-Gravity		
Loc	R+	/ R-	/ Rh	/ Rw	/ U	/ RL
B	1331	/-	/-	/800	/220	/209
I	1210	/-	/-	/623	/240	/-

Wind reactions based on MWFRS
B Brg Wid = 3.5 Min Req = 1.5
I Brg Wid = 3.5 Min Req = 1.5
Bearings B & I are a rigid surface.
Members not listed have forces less than 375#

Maximum Top Chord Forces Per Ply (lbs)

Chords	Tens.	Comp.	Chords	Tens.	Comp.
B - C	218	- 847	E - F	1014	- 1939
C - D	865	- 2019	F - G	818	- 1558
D - E	1021	- 1952	G - H	560	- 1053

Maximum Bot Chord Forces Per Ply (lbs)

Chords	Tens.	Comp.	Chords	Tens.	Comp.
C - P	1440	- 654	N - L	1753	- 853
P - N	1749	- 855	K - J	1100	- 591

Maximum Web Forces Per Ply (lbs)

Webs	Tens.	Comp.	Webs	Tens.	Comp.
L - F	465	- 235	G - J	601	- 882
L - K	1551	- 826	J - H	1458	- 775
F - K	463	- 650	H - I	679	- 1163
K - G	651	- 331			

Lumber

Top chord: 2x4 SP M-31; T1 2x6 SP 2400f-2.0E;
Bot chord: 2x4 SP M-31;
Webs: 2x4 SP M-31;

Plating Notes

(**) 2 plate(s) require special positioning. Refer to scaled plate plot details for special positioning requirements.

Purlins

In lieu of structural panels use purlins to brace all flat TC @ 24" oc.

Wind

Wind loads based on MWFRS with additional C&C member design.

Right end vertical not exposed to wind pressure.

Wind loading based on both gable and hip roof types.

WILLIAM H. KRICK
LICENSE
No. 70861
STATE OF FLORIDA
PROFESSIONAL ENGINEER

COA #0278
02/10/2023
Florida Certificate of Product Approval #FL 1999

****WARNING**** READ AND FOLLOW ALL NOTES ON THIS DRAWING!
****IMPORTANT**** FURNISH THIS DRAWING TO ALL CONTRACTORS INCLUDING THE INSTALLERS

Trusses require extreme care in fabricating, handling, shipping, installing and bracing. Refer to and follow the latest edition of BCSI (Building Component Safety Information, by TPI and SBCA) for safety practices prior to performing these functions. Installers shall provide temporary bracing per BCSI. Unless noted otherwise, top chord shall have properly attached structural sheathing and bottom chord shall have a properly attached rigid ceiling. Locations shown for permanent lateral restraint of webs shall have bracing installed per BCSI sections B3, B7, or B10, as applicable. Apply plates to each face of truss and position as shown above and on the Joint Details, unless noted otherwise. Refer to drawings 160A-Z for standard plate positions. Refer to job's General Notes page for additional information.

Alpine, a division of ITW Building Components Group Inc. shall not be responsible for any deviation from this drawing, any failure to build the truss in conformance with ANSI/TPI 1, or for handling, shipping, installation and bracing of trusses. A seal on this drawing or cover page listing this drawing, indicates acceptance of professional engineering responsibility solely for the design shown. The suitability and use of this drawing for any structure is the responsibility of the Building Designer per ANSI/TPI 1 Sec.2.

For more information see these web sites: Alpine: alpineitw.com; TPI: tpinst.org; SBCA: sbcacomponents.com; ICC: iccsafe.org; AWC: awc.org

ALPINE
AN ITW COMPANY
6750 Forum Drive
Suite 305
Orlando FL, 32821

SEQN: 409503 / HIPM FROM: CDM	Ply: 2 Qty: 1	**Job Number:** 23-8926 Sunset 7 **Truss Label:** D19	Cust: R 215 JRef:1XN32150003 T8 DrwNo: 041.23.0912.21350 / WHK 02/10/2023

2 Complete Trusses Required

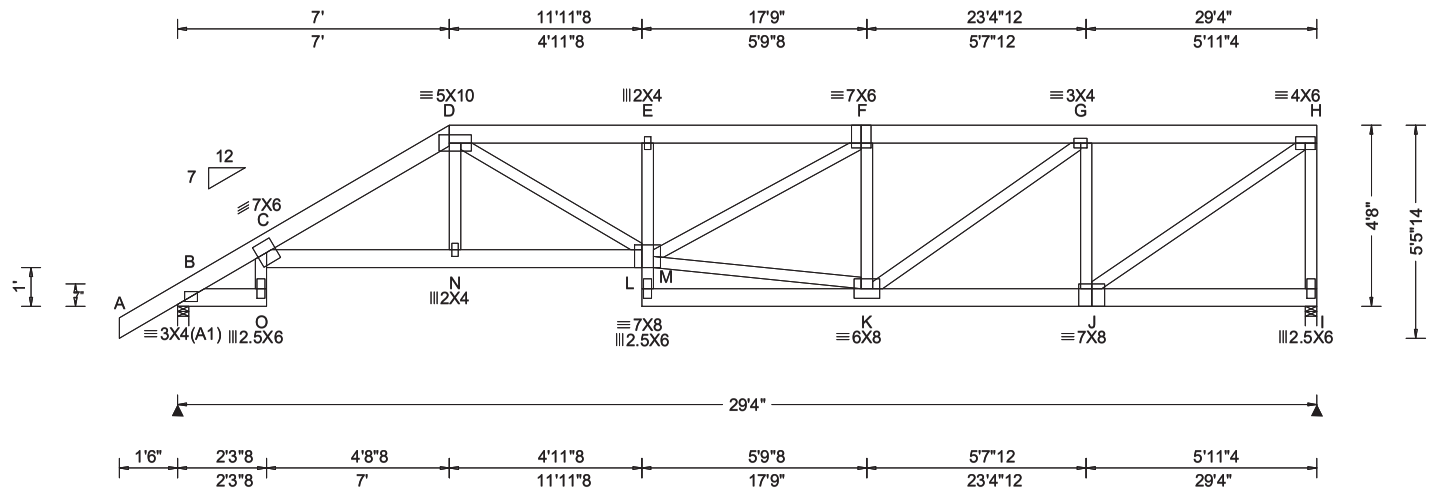

Loading Criteria (psf)

TCLL: 20.00
TCDL: 10.00
BCLL: 0.00
BCDL: 10.00
Des Ld: 40.00
NCBCLL: 0.00
Soffit: 2.00
Load Duration: 1.25
Spacing: 24.0 "

Wind Criteria

Wind Std: ASCE 7-16
Speed: 130 mph
Enclosure: Closed
Risk Category: II
EXP: C Kzt: NA
Mean Height: 11.28 ft
TCDL: 5.0 psf
BCDL: 5.0 psf
MWFRS Parallel Dist: 0 to h/2
C&C Dist a: 3.00 ft
Loc. from endwall: NA
GCpi: 0.18
Wind Duration: 1.60

Snow Criteria (Pg,Pf in PSF)

Pg: NA Ct: NA CAT: NA
Pf: NA Ce: NA
Lu: NA Cs: NA
Snow Duration: NA

Building Code:
FBC 7th Ed. 2020 Res.
TPI Std: 2014
Rep Fac: No
FT/RT:20(0)/10(0)
Plate Type(s):
WAVE

Defl/CSI Criteria

PP Deflection in	loc	L/defl	L/#
VERT(LL): 0.226	N	999	240
VERT(CL): 0.472	N	741	180
HORZ(LL): 0.172	J	-	-
HORZ(TL): 0.359	J	-	-

Creep Factor: 2.0
Max TC CSI: 0.935
Max BC CSI: 0.264
Max Web CSI: 0.209

VIEW Ver: 21.01.01A.0521.20

▲Maximum Reactions (lbs)

Loc	Gravity R+	/ R-	/ Rh	Non-Gravity / Rw	/ U	/ RL
B	2504	/-	/-	/-	/424	/-
I	2605	/-	/-	/-	/416	/-

Wind reactions based on MWFRS
B Brg Wid = 3.5 Min Req = 1.5
I Brg Wid = 3.5 Min Req = 1.5
Bearings B & I are a rigid surface.
Members not listed have forces less than 375#

Maximum Top Chord Forces Per Ply (lbs)

Chords	Tens.	Comp.	Chords	Tens.	Comp.
B - C	112	- 681	E - F	490	- 3019
C - D	421	- 2595	F - G	354	- 2229
D - E	493	- 3042	G - H	237	- 1490

Maximum Bot Chord Forces Per Ply (lbs)

Chords	Tens.	Comp.	Chords	Tens.	Comp.
C - N	2423	- 385	K - J	1546	- 250
N - L	2437	- 386			

Maximum Web Forces Per Ply (lbs)

Webs	Tens.	Comp.	Webs	Tens.	Comp.
D - L	708	- 125	K - G	860	- 130
L - F	877	- 149	G - J	188	- 805
L - K	2199	- 350	J - H	1842	- 293
F - K	165	- 692	H - I	213	- 1194

Lumber

Top chord: 2x6 SP 2400f-2.0E;
Bot chord: 2x6 SP 2400f-2.0E;
Webs: 2x4 SP M-31;

Nailnote

Nail Schedule:0.131"x3", min. nails
Top Chord: 1 Row @12.00" o.c.
Bot Chord: 1 Row @12.00" o.c.
Webs : 1 Row @ 4" o.c.
Use equal spacing between rows and stagger nails in each row to avoid splitting.

Loading

#1 hip supports 7-0-0 jacks W/2 panel TC and no end vert.

Purlins

In lieu of structural panels use purlins to brace all flat TC @ 24" oc.

Wind

Wind loads and reactions based on MWFRS.

Right end vertical not exposed to wind pressure.

Wind loading based on both gable and hip roof types.

WILLIAM H. KRICK
LICENSE
No. 70861
STATE OF
FLORIDA
PROFESSIONAL ENGINEER

COA #0278
02/10/2023
Florida Certificate of Product Approval #FL 1999

****WARNING**** READ AND FOLLOW ALL NOTES ON THIS DRAWING!
****IMPORTANT**** FURNISH THIS DRAWING TO ALL CONTRACTORS INCLUDING THE INSTALLERS

Trusses require extreme care in fabricating, handling, shipping, installing and bracing. Refer to and follow the latest edition of BCSI (Building Component Safety Information, by TPI and SBCA) for safety practices prior to performing these functions. Installers shall provide temporary bracing per BCSI. Unless noted otherwise, top chord shall have properly attached structural sheathing and bottom chord shall have a properly attached rigid ceiling. Locations shown for permanent lateral restraint of webs shall have bracing installed per BCSI sections B3, B7, or B10, as applicable. Apply plates to each face of truss and position as shown above and on the Joint Details, unless noted otherwise. Refer to drawings 160A-Z for standard plate positions. Refer to job's General Notes page for additional information.

Alpine, a division of ITW Building Components Group Inc. shall not be responsible for any deviation from this drawing, any failure to build the truss in conformance with ANSI/TPI 1, or for handling, shipping, installation and bracing of trusses. A seal on this drawing or cover page listing this drawing, indicates acceptance of professional engineering responsibility solely for the design shown. The suitability and use of this drawing for any structure is the responsibility of the Building Designer per ANSI/TPI 1 Sec.2.

For more information see these web sites: Alpine: alpineitw.com; TPI: tpinst.org; SBCA: sbcacomponents.com; ICC: iccsafe.org; AWC: awc.org

ALPINE
AN ITW COMPANY
6750 Forum Drive
Suite 305
Orlando FL, 32821

SEQN: 409504 / HIPS FROM: CDM	Ply: 1 Qty: 1	**Job Number:** 23-8926 Sunset 7 **Truss Label:** G01	Cust: R 215 JRef:1XN32150003 T23 DrwNo: 041.23.0912.19090 / WHK 02/10/2023

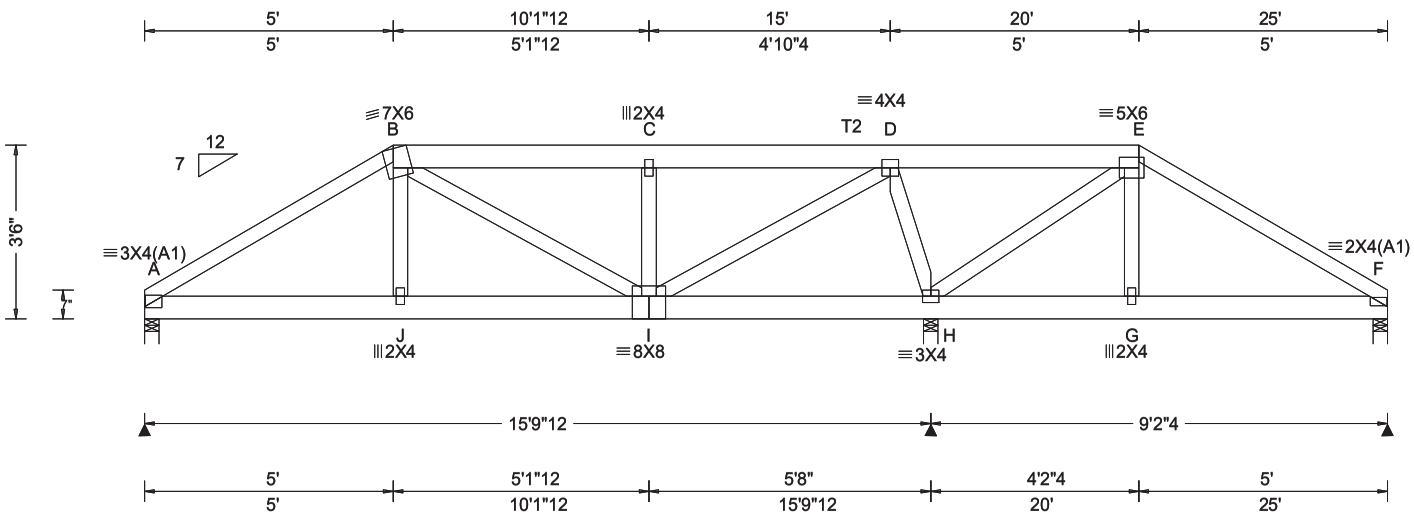

Loading Criteria (psf)

TCLL: 20.00
TCDL: 10.00
BCLL: 0.00
BCDL: 10.00
Des Ld: 40.00
NCBCLL: 0.00
Soffit: 2.00
Load Duration: 1.25
Spacing: 24.0 "

Wind Criteria

Wind Std: ASCE 7-16
Speed: 130 mph
Enclosure: Closed
Risk Category: II
EXP: C Kzt: NA
Mean Height: 11.14 ft
TCDL: 5.0 psf
BCDL: 5.0 psf
MWFRS Parallel Dist: 0 to h/2
C&C Dist a: 3.00 ft
Loc. from endwall: NA
GCpi: 0.18
Wind Duration: 1.60

Snow Criteria (Pg,Pf in PSF)

Pg: NA Ct: NA CAT: NA
Pf: NA Ce: NA
Lu: NA Cs: NA
Snow Duration: NA

Building Code:
FBC 7th Ed. 2020 Res.
TPI Std: 2014
Rep Fac: No
FT/RT:20(0)/10(0)
Plate Type(s):
WAVE

Defl/CSI Criteria

PP Deflection in	loc	L/defl	L/#
VERT(LL): 0.017	C	999	240
VERT(CL): 0.036	C	999	180
HORZ(LL): 0.004	B	-	-
HORZ(TL): 0.009	B	-	-

Creep Factor: 2.0
Max TC CSI: 0.147
Max BC CSI: 0.115
Max Web CSI: 0.228

VIEW Ver: 21.01.01A.0521.20

▲Maximum Reactions (lbs)

Loc	Gravity R+	/ R-	/ Rh	Non-Gravity / Rw	/ U	/ RL
A	879	/-	/-	/-	/143	/-
H	2022	/-	/-	/-	/304	/-
F	341	/-	/-	/-	/63	/-

Wind reactions based on MWFRS
A Brg Wid = 3.5 Min Req = 1.5
H Brg Wid = 3.5 Min Req = 1.5
F Brg Wid = 3.5 Min Req = 1.5
Bearings A, H, & F are a rigid surface.
Members not listed have forces less than 375#

Maximum Top Chord Forces Per Ply (lbs)

Chords	Tens.	Comp.	Chords	Tens.	Comp.
A - B	227	-1315	C - D	162	-981
B - C	162	-982	D - E	513	-74

Maximum Bot Chord Forces Per Ply (lbs)

Chords	Tens.	Comp.	Chords	Tens.	Comp.
A - J	1073	-173	J - I	1087	-171

Maximum Web Forces Per Ply (lbs)

Webs	Tens.	Comp.	Webs	Tens.	Comp.
C - I	187	-484	D - H	314	-1330
I - D	1356	-182	H - E	137	-906

Lumber

Top chord: 2x4 SP M-31; T2 2x6 SP 2400f-2.0E;
Bot chord: 2x6 SP 2400f-2.0E;
Webs: 2x4 SP M-31;

Loading

#1 hip supports 5-0-0 jacks with no webs.

Left side jacks have 5-0-0 setback with 0-0-0 cant and 1-6-0 overhang. End jacks have 5-0-0 setback with 0-0-0 cant and 1-6-0 overhang. Right side jacks have 5-0-0 setback with 0-0-0 cant and 0-0-0 overhang.

Purlins

In lieu of structural panels use purlins to brace all flat TC @ 24" oc.

Wind

Wind loads and reactions based on MWFRS.

Wind loading based on both gable and hip roof types.

WILLIAM H. KRICK
LICENSE
No. 70861
STATE OF
FLORIDA
PROFESSIONAL ENGINEER

COA #0278

02/10/2023

Florida Certificate of Product Approval #FL 1999

****WARNING**** READ AND FOLLOW ALL NOTES ON THIS DRAWING!
****IMPORTANT**** FURNISH THIS DRAWING TO ALL CONTRACTORS INCLUDING THE INSTALLERS

Trusses require extreme care in fabricating, handling, shipping, installing and bracing. Refer to and follow the latest edition of BCSI (Building Component Safety Information, by TPI and SBCA) for safety practices prior to performing these functions. Installers shall provide temporary bracing per BCSI. Unless noted otherwise, top chord shall have properly attached structural sheathing and bottom chord shall have a properly attached rigid ceiling. Locations shown for permanent lateral restraint of webs shall have bracing installed per BCSI sections B3, B7, or B10, as applicable. Apply plates to each face of truss and position as shown above and on the Joint Details, unless noted otherwise. Refer to drawings 160A-Z for standard plate positions. Refer to job's General Notes page for additional information.

Alpine, a division of ITW Building Components Group Inc. shall not be responsible for any deviation from this drawing, any failure to build the truss in conformance with ANSI/TPI 1, or for handling, shipping, installation and bracing of trusses. A seal on this drawing or cover page listing this drawing, indicates acceptance of professional engineering responsibility solely for the design shown. The suitability and use of this drawing for any structure is the responsibility of the Building Designer per ANSI/TPI 1 Sec.2.

For more information see these web sites: Alpine: alpineitw.com; TPI: tpinst.org; SBCA: sbcacomponents.com; ICC: iccsafe.org; AWC: awc.org

ALPINE
AN ITW COMPANY
6750 Forum Drive
Suite 305
Orlando FL, 32821

SEQN: 409498 / HIPM FROM: CDM	Ply: 1 Qty: 1	**Job Number:** 23-8926 Sunset 7 **Truss Label:** G02	Cust: R 215 JRef:1XN32150003 T27 DrwNo: 041.23.0912.20396 / WHK 02/10/2023

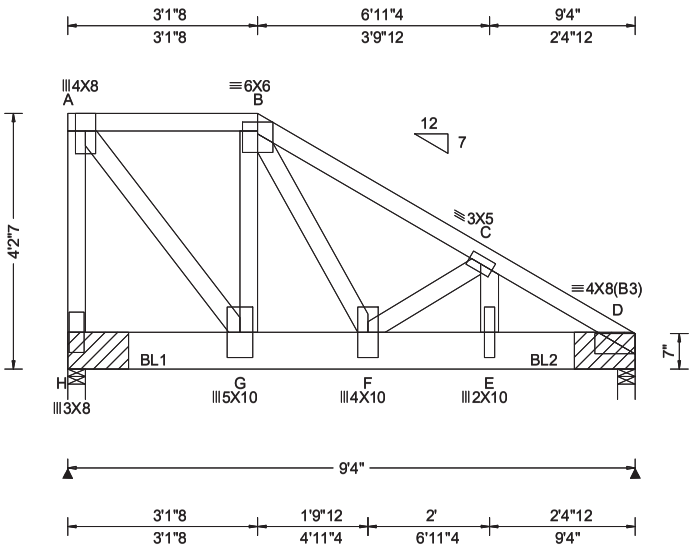

Loading Criteria (psf)

TCLL: 20.00
TCDL: 10.00
BCLL: 0.00
BCDL: 10.00
Des Ld: 40.00
NCBCLL: 10.00
Soffit: 2.00
Load Duration: 1.25
Spacing: 24.0 "

Wind Criteria

Wind Std: ASCE 7-16
Speed: 130 mph
Enclosure: Closed
Risk Category: II
EXP: C Kzt: NA
Mean Height: 15.00 ft
TCDL: 5.0 psf
BCDL: 5.0 psf
MWFRS Parallel Dist: 0 to h/2
C&C Dist a: 3.00 ft
Loc. from endwall: not in 4.50 ft
GCpi: 0.18
Wind Duration: 1.60

Snow Criteria (Pg,Pf in PSF)

Pg: NA Ct: NA CAT: NA
Pf: NA Ce: NA
Lu: NA Cs: NA
Snow Duration: NA

Building Code:
FBC 7th Ed. 2020 Res.
TPI Std: 2014
Rep Fac: Varies by Ld Case
FT/RT:20(0)/10(0)
Plate Type(s):
WAVE

Defl/CSI Criteria

PP Deflection in	loc	L/defl	L/#
VERT(LL): 0.033	F	999	240
VERT(CL): 0.066	F	999	180
HORZ(LL): 0.011	A	-	-
HORZ(TL): 0.021	A	-	-

Creep Factor: 2.0
Max TC CSI: 0.137
Max BC CSI: 0.726
Max Web CSI: 0.269

VIEW Ver: 21.01.01A.0521.20

▲Maximum Reactions (lbs)

	Gravity			Non-Gravity		
Loc	R+	/ R-	/ Rh	/ Rw	/ U	/ RL
H	3132	/-	/-	/-	/192	/-
D	3594	/-	/-	/-	/294	/-

Wind reactions based on MWFRS
H Brg Wid = 3.5 Min Req = -
D Brg Wid = 3.5 Min Req = -
Bearings H & D are a rigid surface.
Members not listed have forces less than 375#

Maximum Top Chord Forces Per Ply (lbs)

Chords	Tens.	Comp.	Chords	Tens.	Comp.
A - B	95	-1710	C - D	190	-3839
B - C	150	-3017			

Maximum Bot Chord Forces Per Ply (lbs)

Chords	Tens.	Comp.	Chords	Tens.	Comp.
G - F	1743	-98	E - D	3264	-156
F - E	3223	-156			

Maximum Web Forces Per Ply (lbs)

Webs	Tens.	Comp.	Webs	Tens.	Comp.
A - H	157	-2341	B - F	1937	-52
A - G	2828	-155	F - C	46	-817
G - B	42	-426	C - E	866	-1

Lumber

Top chord: 2x4 SP M-31;
Bot chord: 2x8 SP #2;
Webs: 2x4 SP M-31;

Special Loads

------(Lumber Dur.Fac.=1.25 / Plate Dur.Fac.=1.25)

TC: From	63 plf at	0.00 to	63 plf at	3.12
TC: From	32 plf at	3.12 to	32 plf at	6.94
TC: From	63 plf at	6.94 to	63 plf at	9.33
BC: From	10 plf at	0.00 to	10 plf at	9.33

BC: 1232 lb Conc. Load at 0.94
BC: 1233 lb Conc. Load at 2.94, 4.94, 6.94, 8.94

Purlins

In lieu of structural panels use purlins to brace all flat TC @ 24" oc.

Wind

Wind loads and reactions based on MWFRS.
Left end vertical not exposed to wind pressure.
Wind loading based on both gable and hip roof types.

Bearing Block(s)

Brg blocks:0.131"x3", min. nails

brg	x-loc	#blocks	length/blk	#nails/blk	wall plate
1	0.000'	1	12"	4	Rigid Surface
2	9.041'	1	12"	5	Rigid Surface

Brg block to be same size and species as chord.
Refer to drawing CNNAILSP1014 for more information.

WILLIAM H. KRICK
LICENSE
No. 70861
STATE OF FLORIDA
PROFESSIONAL ENGINEER

COA #0278
02/10/2023
Florida Certificate of Product Approval #FL 1999

****WARNING**** READ AND FOLLOW ALL NOTES ON THIS DRAWING!
****IMPORTANT**** FURNISH THIS DRAWING TO ALL CONTRACTORS INCLUDING THE INSTALLERS

Trusses require extreme care in fabricating, handling, shipping, installing and bracing. Refer to and follow the latest edition of BCSI (Building Component Safety Information, by TPI and SBCA) for safety practices prior to performing these functions. Installers shall provide temporary bracing per BCSI. Unless noted otherwise, top chord shall have properly attached structural sheathing and bottom chord shall have a properly attached rigid ceiling. Locations shown for permanent lateral restraint of webs shall have bracing installed per BCSI sections B3, B7, or B10, as applicable. Apply plates to each face of truss and position as shown above and on the Joint Details, unless noted otherwise. Refer to drawings 160A-Z for standard plate positions. Refer to job's General Notes page for additional information.

Alpine, a division of ITW Building Components Group Inc. shall not be responsible for any deviation from this drawing, any failure to build the truss in conformance with ANSI/TPI 1, or for handling, shipping, installation and bracing of trusses. A seal on this drawing or cover page listing this drawing, indicates acceptance of professional engineering responsibility solely for the design shown. The suitability and use of this drawing for any structure is the responsibility of the Building Designer per ANSI/TPI 1 Sec.2.

For more information see these web sites: Alpine: alpineitw.com; TPI: tpinst.org; SBCA: sbcacomponents.com; ICC: iccsafe.org; AWC: awc.org

ALPINE AN ITW COMPANY
6750 Forum Drive
Suite 305
Orlando FL, 32821

SEQN: 409499 / HIP_ FROM: CDM	Ply: 1 Qty: 1	**Job Number:** 23-8926 Sunset 7 **Truss Label:** J01	Cust: R 215 JRef:1XN32150003 T21 DrwNo: 041.23.0912.19176 / WHK 02/10/2023

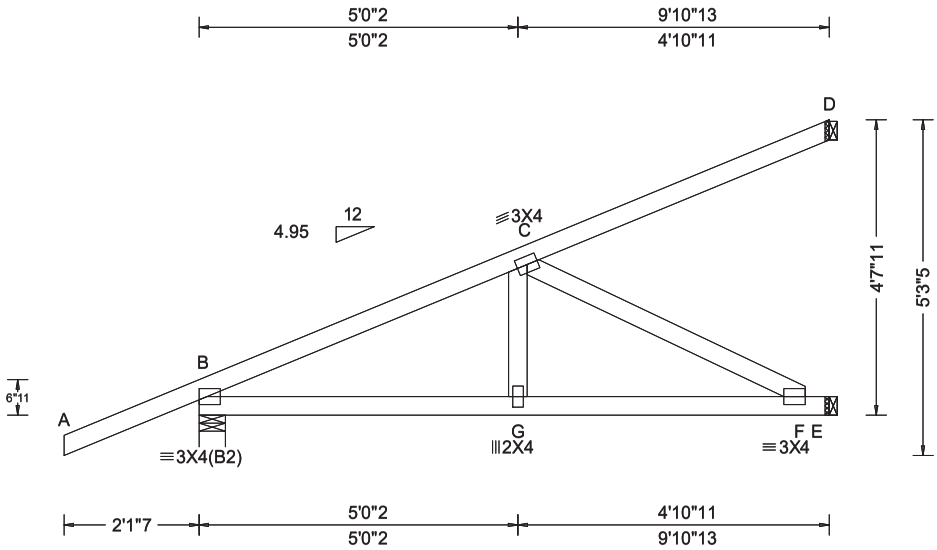

Loading Criteria (psf)

TCLL: 20.00
TCDL: 10.00
BCLL: 0.00
BCDL: 10.00
Des Ld: 40.00
NCBCLL: 0.00
Soffit: 2.00
Load Duration: 1.25
Spacing: 24.0 "

Wind Criteria

Wind Std: ASCE 7-16
Speed: 130 mph
Enclosure: Closed
Risk Category: II
EXP: C Kzt: NA
Mean Height: 0.00 ft
TCDL: 5.0 psf
BCDL: 5.0 psf
MWFRS Parallel Dist: 0 to h/2
C&C Dist a: 3.00 ft
Loc. from endwall: NA
GCpi: 0.18
Wind Duration: 1.60

Snow Criteria (Pg,Pf in PSF)

Pg: NA Ct: NA CAT: NA
Pf: NA Ce: NA
Lu: NA Cs: NA
Snow Duration: NA

Building Code:
FBC 7th Ed. 2020 Res.
TPI Std: 2014
Rep Fac: No
FT/RT:20(0)/10(0)
Plate Type(s):
WAVE

Defl/CSI Criteria

PP Deflection in	loc	L/defl	L/#
VERT(LL): 0.021	G	999	240
VERT(CL): 0.043	G	999	180
HORZ(LL): -0.006	D	-	-
HORZ(TL): 0.013	D	-	-

Creep Factor: 2.0
Max TC CSI: 0.281
Max BC CSI: 0.227
Max Web CSI: 0.166

VIEW Ver: 21.01.01A.0521.20

▲Maximum Reactions (lbs)

	Gravity			Non-Gravity		
Loc	R+	/ R-	/ Rh	/ Rw	/ U	/ RL
B	462	/-	/-	/-	/93	/-
E	359	/-	/-	/-	/3	/-
D	272	/-	/-	/-	/100	/-

Wind reactions based on MWFRS
B Brg Wid = 4.9 Min Req = 1.5
E Brg Wid = 1.5
D Brg Wid = 1.5
Bearing B is a rigid surface.
Members not listed have forces less than 375#

Maximum Top Chord Forces Per Ply (lbs)

Chords	Tens.	Comp.
B - C	101	- 629

Maximum Bot Chord Forces Per Ply (lbs)

Chords	Tens.	Comp.	Chords	Tens.	Comp.
B - G	553	- 86	G - F	548	- 89

Maximum Web Forces Per Ply (lbs)

Webs	Tens.	Comp.
C - F	100	- 621

Lumber

Top chord: 2x4 SP M-31;
Bot chord: 2x4 SP M-31;
Webs: 2x4 SP M-31;

Loading

Hipjack supports 7-0-0 setback jacks with no webs.

Wind

Wind loads and reactions based on MWFRS.

Wind loading based on both gable and hip roof types.

WILLIAM H. KRICK
LICENSE
No. 70861
STATE OF FLORIDA
PROFESSIONAL ENGINEER

COA #0278
02/10/2023
Florida Certificate of Product Approval #FL 1999

****WARNING**** READ AND FOLLOW ALL NOTES ON THIS DRAWING!
****IMPORTANT**** FURNISH THIS DRAWING TO ALL CONTRACTORS INCLUDING THE INSTALLERS

Trusses require extreme care in fabricating, handling, shipping, installing and bracing. Refer to and follow the latest edition of BCSI (Building Component Safety Information, by TPI and SBCA) for safety practices prior to performing these functions. Installers shall provide temporary bracing per BCSI. Unless noted otherwise, top chord shall have properly attached structural sheathing and bottom chord shall have a properly attached rigid ceiling. Locations shown for permanent lateral restraint of webs shall have bracing installed per BCSI sections B3, B7, or B10, as applicable. Apply plates to each face of truss and position as shown above and on the Joint Details, unless noted otherwise. Refer to drawings 160A-Z for standard plate positions. Refer to job's General Notes page for additional information.

Alpine, a division of ITW Building Components Group Inc. shall not be responsible for any deviation from this drawing, any failure to build the truss in conformance with ANSI/TPI 1, or for handling, shipping, installation and bracing of trusses. A seal on this drawing or cover page listing this drawing, indicates acceptance of professional engineering responsibility solely for the design shown. The suitability and use of this drawing for any structure is the responsibility of the Building Designer per ANSI/TPI 1 Sec.2.

For more information see these web sites: Alpine: alpineitw.com; TPI: tpinst.org; SBCA: sbcacomponents.com; ICC: iccsafe.org; AWC: awc.org

ALPINE AN ITW COMPANY
6750 Forum Drive
Suite 305
Orlando FL, 32821

SEQN: 409500 / HIP_ FROM: CDM	Ply: 1 Qty: 1	**Job Number:** 23-8926 Sunset 7 **Truss Label:** J02	Cust: R 215 JRef:1XN32150003 T26 DrwNo: 041.23.0912.21795 / WHK 02/10/2023

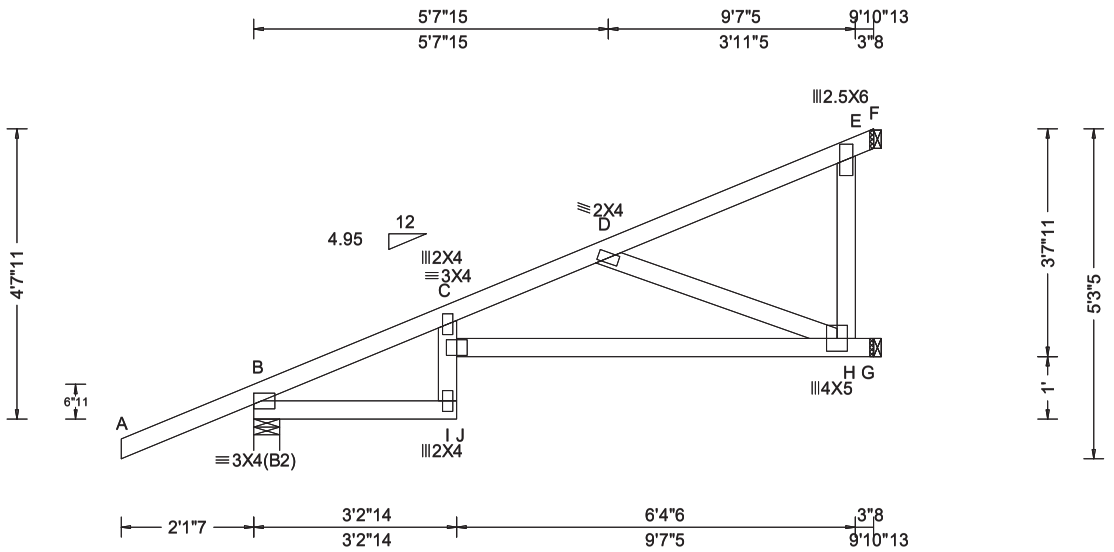

Loading Criteria (psf)

TCLL: 20.00
TCDL: 10.00
BCLL: 0.00
BCDL: 10.00
Des Ld: 40.00
NCBCLL: 0.00
Soffit: 2.00
Load Duration: 1.25
Spacing: 24.0 "

Wind Criteria

Wind Std: ASCE 7-16
Speed: 130 mph
Enclosure: Closed
Risk Category: II
EXP: C Kzt: NA
Mean Height: 0.00 ft
TCDL: 5.0 psf
BCDL: 5.0 psf
MWFRS Parallel Dist: 0 to h/2
C&C Dist a: 3.00 ft
Loc. from endwall: NA
GCpi: 0.18
Wind Duration: 1.60

Snow Criteria (Pg,Pf in PSF)

Pg: NA Ct: NA CAT: NA
Pf: NA Ce: NA
Lu: NA Cs: NA
Snow Duration: NA

Building Code:
FBC 7th Ed. 2020 Res.
TPI Std: 2014
Rep Fac: No
FT/RT:20(0)/10(0)
Plate Type(s):
WAVE

Defl/CSI Criteria

PP Deflection in	loc	L/defl	L/#
VERT(LL): 0.096	I	999	240
VERT(CL): 0.195	I	606	180
HORZ(LL): 0.042	C	-	-
HORZ(TL): 0.086	C	-	-

Creep Factor: 2.0
Max TC CSI: 0.304
Max BC CSI: 0.258
Max Web CSI: 0.238

VIEW Ver: 21.01.01A.0521.20

▲Maximum Reactions (lbs)

Loc	Gravity R+	/ R-	/ Rh	Non-Gravity / Rw	/ U	/ RL
B	462	/-	/-	/-	/93	/-
G	127	/-	/-	/-	/215	/-
F	504	/-	/-	/113	/-	/-

Wind reactions based on MWFRS
B Brg Wid = 4.9 Min Req = 1.5
G Brg Wid = 1.5
F Brg Wid = 1.5
Bearing B is a rigid surface.
Members not listed have forces less than 375#

Maximum Top Chord Forces Per Ply (lbs)

Chords	Tens.	Comp.	Chords	Tens.	Comp.
B - C	82	- 386	C - D	187	- 816

Maximum Bot Chord Forces Per Ply (lbs)

Chords	Tens.	Comp.
I - H	812	- 170

Maximum Web Forces Per Ply (lbs)

Webs	Tens.	Comp.
D - H	183	- 845

Lumber

Top chord: 2x4 SP M-31;
Bot chord: 2x4 SP M-31;
Webs: 2x4 SP M-31;

Loading

Hipjack supports 7-0-0 setback jacks with no webs.

Wind

Wind loads and reactions based on MWFRS.

Wind loading based on both gable and hip roof types.

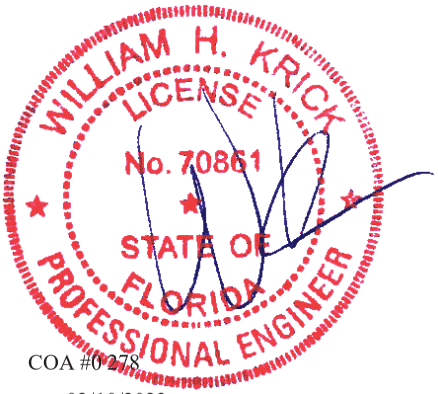

COA #0278
02/10/2023
Florida Certificate of Product Approval #FL 1999

****WARNING**** READ AND FOLLOW ALL NOTES ON THIS DRAWING!
****IMPORTANT**** FURNISH THIS DRAWING TO ALL CONTRACTORS INCLUDING THE INSTALLERS

Trusses require extreme care in fabricating, handling, shipping, installing and bracing. Refer to and follow the latest edition of BCSI (Building Component Safety Information, by TPI and SBCA) for safety practices prior to performing these functions. Installers shall provide temporary bracing per BCSI. Unless noted otherwise, top chord shall have properly attached structural sheathing and bottom chord shall have a properly attached rigid ceiling. Locations shown for permanent lateral restraint of webs shall have bracing installed per BCSI sections B3, B7, or B10, as applicable. Apply plates to each face of truss and position as shown above and on the Joint Details, unless noted otherwise. Refer to drawings 160A-Z for standard plate positions. Refer to job's General Notes page for additional information.

Alpine, a division of ITW Building Components Group Inc. shall not be responsible for any deviation from this drawing, any failure to build the truss in conformance with ANSI/TPI 1, or for handling, shipping, installation and bracing of trusses. A seal on this drawing or cover page listing this drawing, indicates acceptance of professional engineering responsibility solely for the design shown. The suitability and use of this drawing for any structure is the responsibility of the Building Designer per ANSI/TPI 1 Sec.2.

For more information see these web sites: Alpine: alpineitw.com; TPI: tpinst.org; SBCA: sbcacomponents.com; ICC: iccsafe.org; AWC: awc.org

ALPINE AN ITW COMPANY
6750 Forum Drive
Suite 305
Orlando FL, 32821

SEQN: 409490 / EJAC FROM: CDM	Ply: 1 Qty: 19	**Job Number:** 23-8926 Sunset 7 **Truss Label:** J03	Cust: R 215 JRef:1XN32150003 T9 DrwNo: 041.23.0912.20622 / WHK 02/10/2023

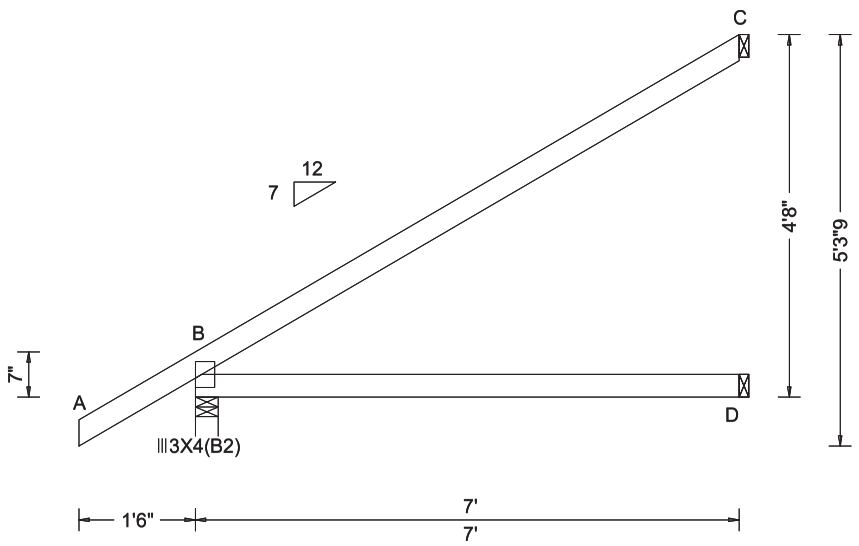

Loading Criteria (psf)	**Wind Criteria**	**Snow Criteria** (Pg,Pf in PSF)	**Defl/CSI Criteria**
TCLL: 20.00 TCDL: 10.00 BCLL: 0.00 BCDL: 10.00 Des Ld: 40.00 NCBCLL: 10.00 Soffit: 2.00 Load Duration: 1.25 Spacing: 24.0 "	Wind Std: ASCE 7-16 Speed: 130 mph Enclosure: Closed Risk Category: II EXP: C Kzt: NA Mean Height: 15.00 ft TCDL: 5.0 psf BCDL: 5.0 psf MWFRS Parallel Dist: 0 to h/2 C&C Dist a: 3.00 ft Loc. from endwall: not in 4.50 ft GCpi: 0.18 Wind Duration: 1.60	Pg: NA Ct: NA CAT: NA Pf: NA Ce: NA Lu: NA Cs: NA Snow Duration: NA Building Code: FBC 7th Ed. 2020 Res. TPI Std: 2014 Rep Fac: Yes FT/RT:20(0)/10(0) Plate Type(s): WAVE	PP Deflection in loc L/defl L/# VERT(LL): NA VERT(CL): NA HORZ(LL): 0.009 B - - HORZ(TL): 0.018 B - - Creep Factor: 2.0 Max TC CSI: 0.314 Max BC CSI: 0.216 Max Web CSI: 0.000 VIEW Ver: 21.01.01A.0521.20

▲Maximum Reactions (lbs)

	Gravity			Non-Gravity		
Loc	R+	/ R-	/ Rh	/ Rw	/ U	/ RL
B	406	/-	/-	/273	/30	/168
D	135	/-	/-	/73	/-	/-
C	200	/-	/-	/130	/113	/-

Wind reactions based on MWFRS
B Brg Wid = 3.5 Min Req = 1.5
D Brg Wid = 1.5
C Brg Wid = 1.5
Bearing B is a rigid surface.
Members not listed have forces less than 375#

Lumber

Top chord: 2x4 SP M-31;
Bot chord: 2x4 SP M-31;

Wind

Wind loads based on MWFRS with additional C&C member design.

Wind loading based on both gable and hip roof types.

WILLIAM H. KRICK
LICENSE
No. 70861
STATE OF FLORIDA
PROFESSIONAL ENGINEER

COA #0278

02/10/2023

Florida Certificate of Product Approval #FL 1999

****WARNING**** READ AND FOLLOW ALL NOTES ON THIS DRAWING!
****IMPORTANT**** FURNISH THIS DRAWING TO ALL CONTRACTORS INCLUDING THE INSTALLERS

Trusses require extreme care in fabricating, handling, shipping, installing and bracing. Refer to and follow the latest edition of BCSI (Building Component Safety Information, by TPI and SBCA) for safety practices prior to performing these functions. Installers shall provide temporary bracing per BCSI. Unless noted otherwise, top chord shall have properly attached structural sheathing and bottom chord shall have a properly attached rigid ceiling. Locations shown for permanent lateral restraint of webs shall have bracing installed per BCSI sections B3, B7, or B10, as applicable. Apply plates to each face of truss and position as shown above and on the Joint Details, unless noted otherwise. Refer to drawings 160A-Z for standard plate positions. Refer to job's General Notes page for additional information.

Alpine, a division of ITW Building Components Group Inc. shall not be responsible for any deviation from this drawing, any failure to build the truss in conformance with ANSI/TPI 1, or for handling, shipping, installation and bracing of trusses. A seal on this drawing or cover page listing this drawing, indicates acceptance of professional engineering responsibility solely for the design shown. The suitability and use of this drawing for any structure is the responsibility of the Building Designer per ANSI/TPI 1 Sec.2.

For more information see these web sites: Alpine: alpineitw.com; TPI: tpinst.org; SBCA: sbcacomponents.com; ICC: iccsafe.org; AWC: awc.org

ALPINE AN ITW COMPANY
6750 Forum Drive
Suite 305
Orlando FL, 32821

SEQN: 409491 / EJAC FROM: CDM	Ply: 1 Qty: 3	**Job Number:** 23-8926 Sunset 7 **Truss Label:** J04	Cust: R 215 JRef:1XN32150003 T48 DrwNo: 041.23.0912.20964 / WHK 02/10/2023

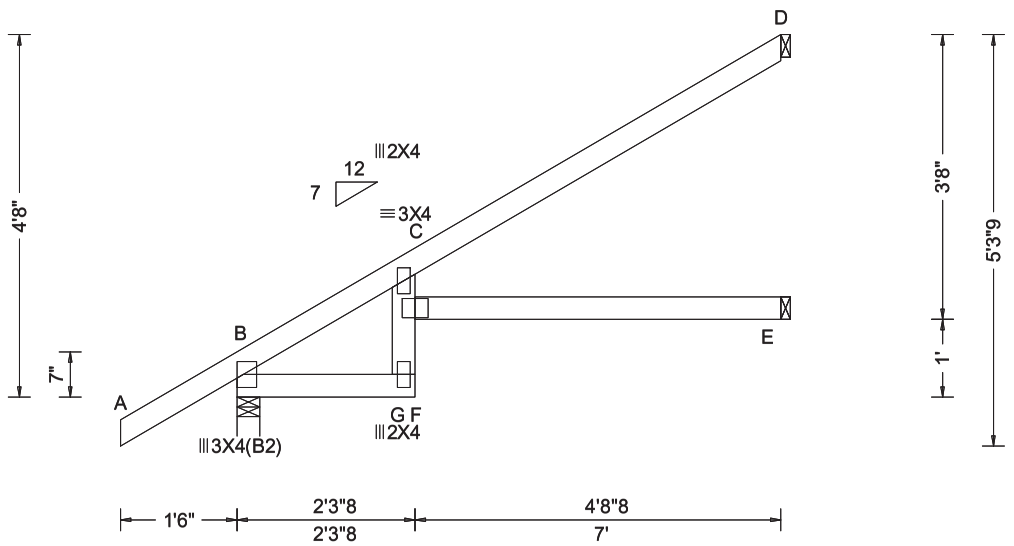

Loading Criteria (psf)
TCLL: 20.00
TCDL: 10.00
BCLL: 0.00
BCDL: 10.00
Des Ld: 40.00
NCBCLL: 10.00
Soffit: 2.00
Load Duration: 1.25
Spacing: 24.0 "

Wind Criteria
Wind Std: ASCE 7-16
Speed: 130 mph
Enclosure: Closed
Risk Category: II
EXP: C Kzt: NA
Mean Height: 15.00 ft
TCDL: 5.0 psf
BCDL: 5.0 psf
MWFRS Parallel Dist: h/2 to h
C&C Dist a: 3.00 ft
Loc. from endwall: not in 4.50 ft
GCpi: 0.18
Wind Duration: 1.60

Snow Criteria (Pg,Pf in PSF)
Pg: NA Ct: NA CAT: NA
Pf: NA Ce: NA
Lu: NA Cs: NA
Snow Duration: NA

Building Code:
FBC 7th Ed. 2020 Res.
TPI Std: 2014
Rep Fac: Yes
FT/RT:20(0)/10(0)
Plate Type(s):
WAVE

Defl/CSI Criteria

PP Deflection in	loc	L/defl	L/#
VERT(LL): 0.140	F	596	240
VERT(CL): 0.282	F	296	180
HORZ(LL): 0.093	C	-	-
HORZ(TL): 0.186	C	-	-

Creep Factor: 2.0
Max TC CSI: 0.373
Max BC CSI: 0.136
Max Web CSI: 0.067

VIEW Ver: 21.01.01A.0521.20

▲Maximum Reactions (lbs)

	Gravity			Non-Gravity		
Loc	R+	/ R-	/ Rh	/ Rw	/ U	/ RL
B	406	/-	/-	/274	/31	/169
E	107	/-	/-	/61	/-	/-
D	210	/-	/-	/142	/104	/-

Wind reactions based on MWFRS
B Brg Wid = 3.5 Min Req = 1.5
E Brg Wid = 1.5
D Brg Wid = 1.5
Bearing B is a rigid surface.
Members not listed have forces less than 375#

Lumber

Top chord: 2x4 SP M-31;
Bot chord: 2x4 SP M-31;
Webs: 2x4 SP M-31;

Wind

Wind loads based on MWFRS with additional C&C member design.

Wind loading based on both gable and hip roof types.

WILLIAM H. KRICK
LICENSE
No. 70861
STATE OF FLORIDA
PROFESSIONAL ENGINEER

COA #0278
02/10/2023
Florida Certificate of Product Approval #FL 1999

****WARNING**** READ AND FOLLOW ALL NOTES ON THIS DRAWING!
****IMPORTANT**** FURNISH THIS DRAWING TO ALL CONTRACTORS INCLUDING THE INSTALLERS

Trusses require extreme care in fabricating, handling, shipping, installing and bracing. Refer to and follow the latest edition of BCSI (Building Component Safety Information, by TPI and SBCA) for safety practices prior to performing these functions. Installers shall provide temporary bracing per BCSI. Unless noted otherwise, top chord shall have properly attached structural sheathing and bottom chord shall have a properly attached rigid ceiling. Locations shown for permanent lateral restraint of webs shall have bracing installed per BCSI sections B3, B7, or B10, as applicable. Apply plates to each face of truss and position as shown above and on the Joint Details, unless noted otherwise. Refer to drawings 160A-Z for standard plate positions. Refer to job's General Notes page for additional information.

Alpine, a division of ITW Building Components Group Inc. shall not be responsible for any deviation from this drawing, any failure to build the truss in conformance with ANSI/TPI 1, or for handling, shipping, installation and bracing of trusses. A seal on this drawing or cover page listing this drawing, indicates acceptance of professional engineering responsibility solely for the design shown. The suitability and use of this drawing for any structure is the responsibility of the Building Designer per ANSI/TPI 1 Sec.2.

For more information see these web sites: Alpine: alpineitw.com; TPI: tpinst.org; SBCA: sbcacomponents.com; ICC: iccsafe.org; AWC: awc.org

ALPINE AN ITW COMPANY
6750 Forum Drive
Suite 305
Orlando FL, 32821

SEQN: 409501 / HIP_ FROM: CDM	Ply: 1 Qty: 2	**Job Number:** 23-8926 Sunset 7 **Truss Label:** J05	Cust: R 215 JRef:1XN32150003 T19 DrwNo: 041.23.0912.20107 / WHK 02/10/2023

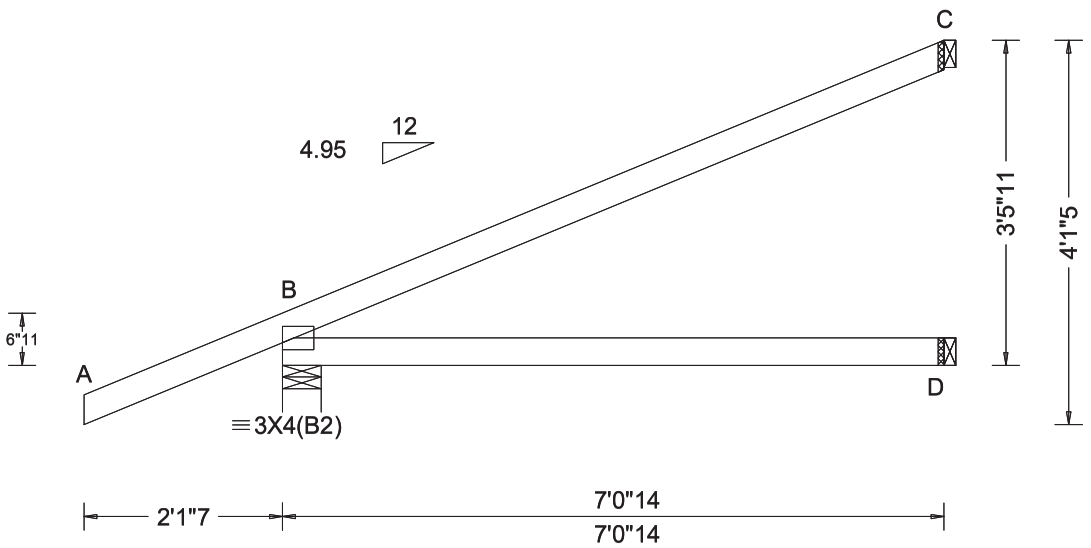

Loading Criteria (psf)
TCLL: 20.00
TCDL: 10.00
BCLL: 0.00
BCDL: 10.00
Des Ld: 40.00
NCBCLL: 0.00
Soffit: 2.00
Load Duration: 1.25
Spacing: 24.0 "

Wind Criteria
Wind Std: ASCE 7-16
Speed: 130 mph
Enclosure: Closed
Risk Category: II
EXP: C Kzt: NA
Mean Height: 0.00 ft
TCDL: 5.0 psf
BCDL: 5.0 psf
MWFRS Parallel Dist: 0 to h/2
C&C Dist a: 3.00 ft
Loc. from endwall: NA
GCpi: 0.18
Wind Duration: 1.60

Snow Criteria (Pg,Pf in PSF)
Pg: NA Ct: NA CAT: NA
Pf: NA Ce: NA
Lu: NA Cs: NA
Snow Duration: NA

Building Code:
FBC 7th Ed. 2020 Res.
TPI Std: 2014
Rep Fac: No
FT/RT:20(0)/10(0)
Plate Type(s):
WAVE

Defl/CSI Criteria
PP Deflection in loc L/defl L/#
VERT(LL): NA
VERT(CL): NA
HORZ(LL): 0.004 B - -
HORZ(TL): 0.008 B - -
Creep Factor: 2.0
Max TC CSI: 0.296
Max BC CSI: 0.121
Max Web CSI: 0.000

VIEW Ver: 21.01.01A.0521.20

▲Maximum Reactions (lbs)

	Gravity			Non-Gravity		
Loc	R+	/ R-	/ Rh	/ Rw	/ U	/ RL
B	307	/-	/-	/-	/68	/-
D	80	/-	/-	/34	/-	/-
C	220	/-	/-	/-	/81	/-

Wind reactions based on MWFRS
B Brg Wid = 4.9 Min Req = 1.5
D Brg Wid = 1.5
C Brg Wid = 1.5
Bearing B is a rigid surface.
Members not listed have forces less than 375#

Lumber

Top chord: 2x4 SP M-31;
Bot chord: 2x4 SP M-31;

Loading

Hipjack supports 5-0-0 setback jacks with no webs.

Wind

Wind loads and reactions based on MWFRS.

Wind loading based on both gable and hip roof types.

WILLIAM H. KRICK
LICENSE
No. 70861
STATE OF
FLORIDA
PROFESSIONAL ENGINEER

COA #0278
02/10/2023
Florida Certificate of Product Approval #FL 1999

****WARNING**** READ AND FOLLOW ALL NOTES ON THIS DRAWING!
****IMPORTANT**** FURNISH THIS DRAWING TO ALL CONTRACTORS INCLUDING THE INSTALLERS

Trusses require extreme care in fabricating, handling, shipping, installing and bracing. Refer to and follow the latest edition of BCSI (Building Component Safety Information, by TPI and SBCA) for safety practices prior to performing these functions. Installers shall provide temporary bracing per BCSI. Unless noted otherwise, top chord shall have properly attached structural sheathing and bottom chord shall have a properly attached rigid ceiling. Locations shown for permanent lateral restraint of webs shall have bracing installed per BCSI sections B3, B7, or B10, as applicable. Apply plates to each face of truss and position as shown above and on the Joint Details, unless noted otherwise. Refer to drawings 160A-Z for standard plate positions. Refer to job's General Notes page for additional information.

Alpine, a division of ITW Building Components Group Inc. shall not be responsible for any deviation from this drawing, any failure to build the truss in conformance with ANSI/TPI 1, or for handling, shipping, installation and bracing of trusses. A seal on this drawing or cover page listing this drawing, indicates acceptance of professional engineering responsibility solely for the design shown. The suitability and use of this drawing for any structure is the responsibility of the Building Designer per ANSI/TPI 1 Sec.2.

For more information see these web sites: Alpine: alpineitw.com; TPI: tpinst.org; SBCA: sbcacomponents.com; ICC: iccsafe.org; AWC: awc.org

ALPINE AN ITW COMPANY
6750 Forum Drive
Suite 305
Orlando FL, 32821

SEQN: 409492 / EJAC FROM: CDM	Ply: 1 Qty: 9	**Job Number:** 23-8926 Sunset 7 **Truss Label:** J06	Cust: R 215 JRef:1XN32150003 T55 DrwNo: 041.23.0912.22298 / WHK 02/10/2023

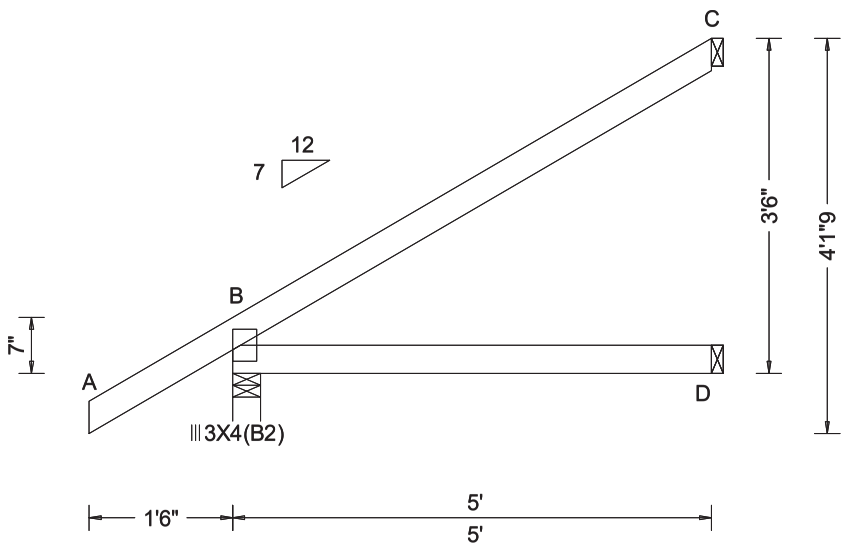

Loading Criteria (psf)	**Wind Criteria**	**Snow Criteria** (Pg,Pf in PSF)	**Defl/CSI Criteria**
TCLL: 20.00 TCDL: 10.00 BCLL: 0.00 BCDL: 10.00 Des Ld: 40.00 NCBCLL: 10.00 Soffit: 2.00 Load Duration: 1.25 Spacing: 24.0 "	Wind Std: ASCE 7-16 Speed: 130 mph Enclosure: Closed Risk Category: II EXP: C Kzt: NA Mean Height: 15.00 ft TCDL: 5.0 psf BCDL: 5.0 psf MWFRS Parallel Dist: 0 to h/2 C&C Dist a: 3.00 ft Loc. from endwall: not in 4.50 ft GCpi: 0.18 Wind Duration: 1.60	Pg: NA Ct: NA CAT: NA Pf: NA Ce: NA Lu: NA Cs: NA Snow Duration: NA Building Code: FBC 7th Ed. 2020 Res. TPI Std: 2014 Rep Fac: Yes FT/RT:20(0)/10(0) Plate Type(s): WAVE	PP Deflection in loc L/defl L/# VERT(LL): NA VERT(CL): NA HORZ(LL): -0.003 C - - HORZ(TL): 0.005 B - - Creep Factor: 2.0 Max TC CSI: 0.159 Max BC CSI: 0.104 Max Web CSI: 0.000 VIEW Ver: 21.01.01A.0521.20

▲Maximum Reactions (lbs)

	Gravity			Non-Gravity		
Loc	R+	/ R-	/ Rh	/ Rw	/ U	/ RL
B	327	/-	/-	/225	/29	/127
D	95	/-	/-	/51	/-	/-
C	138	/-	/-	/89	/81	/-

Wind reactions based on MWFRS
B Brg Wid = 3.5 Min Req = 1.5
D Brg Wid = 1.5
C Brg Wid = 1.5
Bearing B is a rigid surface.
Members not listed have forces less than 375#

Lumber

Top chord: 2x4 SP M-31;
Bot chord: 2x4 SP M-31;

Wind

Wind loads based on MWFRS with additional C&C member design.

Wind loading based on both gable and hip roof types.

WILLIAM H. KRICK
LICENSE
No. 70861
STATE OF FLORIDA
PROFESSIONAL ENGINEER

COA #0278
02/10/2023
Florida Certificate of Product Approval #FL 1999

****WARNING**** READ AND FOLLOW ALL NOTES ON THIS DRAWING!
****IMPORTANT**** FURNISH THIS DRAWING TO ALL CONTRACTORS INCLUDING THE INSTALLERS

Trusses require extreme care in fabricating, handling, shipping, installing and bracing. Refer to and follow the latest edition of BCSI (Building Component Safety Information, by TPI and SBCA) for safety practices prior to performing these functions. Installers shall provide temporary bracing per BCSI. Unless noted otherwise, top chord shall have properly attached structural sheathing and bottom chord shall have a properly attached rigid ceiling. Locations shown for permanent lateral restraint of webs shall have bracing installed per BCSI sections B3, B7, or B10, as applicable. Apply plates to each face of truss and position as shown above and on the Joint Details, unless noted otherwise. Refer to drawings 160A-Z for standard plate positions. Refer to job's General Notes page for additional information.

Alpine, a division of ITW Building Components Group Inc. shall not be responsible for any deviation from this drawing, any failure to build the truss in conformance with ANSI/TPI 1, or for handling, shipping, installation and bracing of trusses. A seal on this drawing or cover page listing this drawing, indicates acceptance of professional engineering responsibility solely for the design shown. The suitability and use of this drawing for any structure is the responsibility of the Building Designer per ANSI/TPI 1 Sec.2.

For more information see these web sites: Alpine: alpineitw.com; TPI: tpinst.org; SBCA: sbcacomponents.com; ICC: iccsafe.org; AWC: awc.org

ALPINE AN ITW COMPANY
6750 Forum Drive
Suite 305
Orlando FL, 32821

SEQN: 409493 / EJAC FROM: CDM	Ply: 1 Qty: 2	**Job Number:** 23-8926 Sunset 7 **Truss Label:** J07	Cust: R 215 JRef:1XN32150003 T45 DrwNo: 041.23.0912.21529 / WHK 02/10/2023

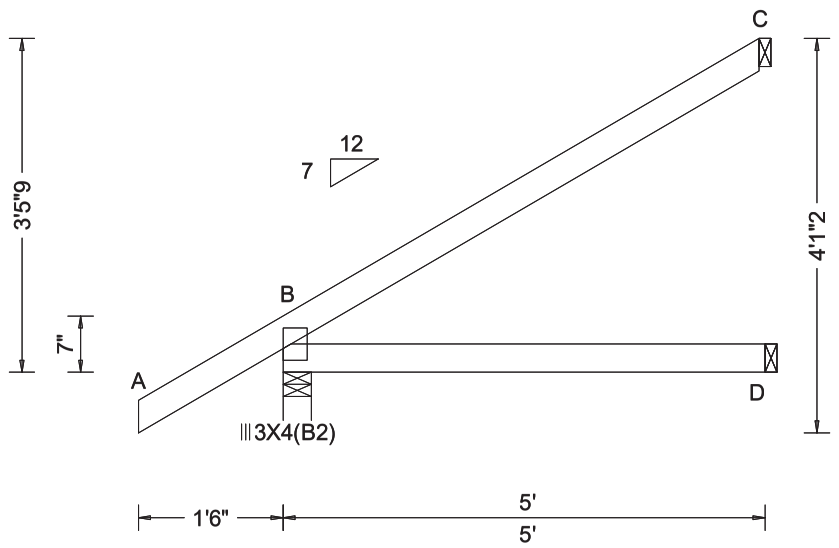

Loading Criteria (psf)	**Wind Criteria**	**Snow Criteria** (Pg,Pf in PSF)	**Defl/CSI Criteria**
TCLL: 20.00 TCDL: 10.00 BCLL: 0.00 BCDL: 10.00 Des Ld: 40.00 NCBCLL: 10.00 Soffit: 2.00 Load Duration: 1.25 Spacing: 24.0 "	Wind Std: ASCE 7-16 Speed: 130 mph Enclosure: Closed Risk Category: II EXP: C Kzt: NA Mean Height: 15.00 ft TCDL: 5.0 psf BCDL: 5.0 psf MWFRS Parallel Dist: 0 to h/2 C&C Dist a: 3.00 ft Loc. from endwall: not in 4.50 ft GCpi: 0.18 Wind Duration: 1.60	Pg: NA Ct: NA CAT: NA Pf: NA Ce: NA Lu: NA Cs: NA Snow Duration: NA Building Code: FBC 7th Ed. 2020 Res. TPI Std: 2014 Rep Fac: Yes FT/RT:20(0)/10(0) Plate Type(s): WAVE	PP Deflection in loc L/defl L/# VERT(LL): NA VERT(CL): NA HORZ(LL): -0.003 C - - HORZ(TL): 0.005 B - - Creep Factor: 2.0 Max TC CSI: 0.155 Max BC CSI: 0.104 Max Web CSI: 0.000 VIEW Ver: 21.01.01A.0521.20

▲Maximum Reactions (lbs)

	Gravity			Non-Gravity		
Loc	R+	/ R-	/ Rh	/ Rw	/ U	/ RL
B	326	/-	/-	/225	/29	/126
C	136	/-	/-	/87	/80	/-
D	95	/-	/-	/51	/-	/-

Wind reactions based on MWFRS
B Brg Wid = 3.5 Min Req = 1.5
C Brg Wid = 1.5
D Brg Wid = 1.5
Bearing B is a rigid surface.
Members not listed have forces less than 375#

Lumber

Top chord: 2x4 SP M-31;
Bot chord: 2x4 SP M-31;

Wind

Wind loads based on MWFRS with additional C&C member design.

Wind loading based on both gable and hip roof types.

WILLIAM H. KRICK
LICENSE
No. 70861
STATE OF FLORIDA
PROFESSIONAL ENGINEER

COA #0278

02/10/2023

Florida Certificate of Product Approval #FL 1999

****WARNING**** READ AND FOLLOW ALL NOTES ON THIS DRAWING!
****IMPORTANT**** FURNISH THIS DRAWING TO ALL CONTRACTORS INCLUDING THE INSTALLERS

Trusses require extreme care in fabricating, handling, shipping, installing and bracing. Refer to and follow the latest edition of BCSI (Building Component Safety Information, by TPI and SBCA) for safety practices prior to performing these functions. Installers shall provide temporary bracing per BCSI. Unless noted otherwise, top chord shall have properly attached structural sheathing and bottom chord shall have a properly attached rigid ceiling. Locations shown for permanent lateral restraint of webs shall have bracing installed per BCSI sections B3, B7, or B10, as applicable. Apply plates to each face of truss and position as shown above and on the Joint Details, unless noted otherwise. Refer to drawings 160A-Z for standard plate positions. Refer to job's General Notes page for additional information.

Alpine, a division of ITW Building Components Group Inc. shall not be responsible for any deviation from this drawing, any failure to build the truss in conformance with ANSI/TPI 1, or for handling, shipping, installation and bracing of trusses. A seal on this drawing or cover page listing this drawing, indicates acceptance of professional engineering responsibility solely for the design shown. The suitability and use of this drawing for any structure is the responsibility of the Building Designer per ANSI/TPI 1 Sec.2.

For more information see these web sites: Alpine: alpineitw.com; TPI: tpinst.org; SBCA: sbcacomponents.com; ICC: iccsafe.org; AWC: awc.org

ALPINE AN ITW COMPANY
6750 Forum Drive
Suite 305
Orlando FL, 32821

SEQN: 409494 / JACK FROM: CDM	Ply: 1 Qty: 2	**Job Number:** 23-8926 Sunset 7 **Truss Label:** J08	Cust: R 215 JRef:1XN32150003 T18 DrwNo: 041.23.0912.20824 / WHK 02/10/2023

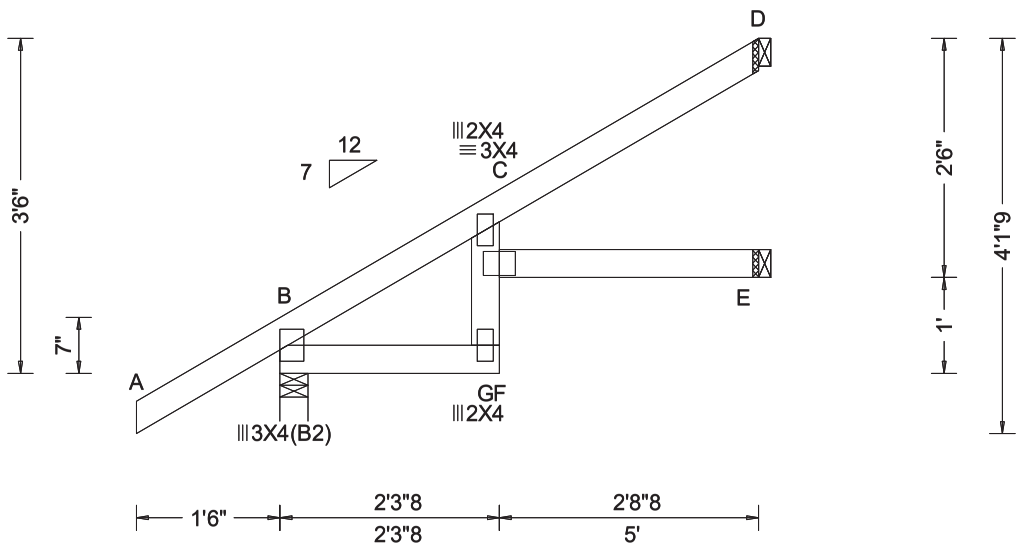

Loading Criteria (psf)

TCLL: 20.00
TCDL: 10.00
BCLL: 0.00
BCDL: 10.00
Des Ld: 40.00
NCBCLL: 10.00
Soffit: 2.00
Load Duration: 1.25
Spacing: 24.0 "

Wind Criteria

Wind Std: ASCE 7-16
Speed: 130 mph
Enclosure: Closed
Risk Category: II
EXP: C Kzt: NA
Mean Height: 15.00 ft
TCDL: 5.0 psf
BCDL: 5.0 psf
MWFRS Parallel Dist: 0 to h/2
C&C Dist a: 3.00 ft
Loc. from endwall: not in 4.50 ft
GCpi: 0.18
Wind Duration: 1.60

Snow Criteria (Pg,Pf in PSF)

Pg: NA Ct: NA CAT: NA
Pf: NA Ce: NA
Lu: NA Cs: NA
Snow Duration: NA

Building Code:
FBC 7th Ed. 2020 Res.
TPI Std: 2014
Rep Fac: Yes
FT/RT:20(0)/10(0)
Plate Type(s):
WAVE

Defl/CSI Criteria

PP Deflection in	loc	L/defl	L/#
VERT(LL): 0.041	F	999	240
VERT(CL): 0.082	F	726	180
HORZ(LL): 0.027	C	-	-
HORZ(TL): 0.054	C	-	-

Creep Factor: 2.0
Max TC CSI: 0.173
Max BC CSI: 0.047
Max Web CSI: 0.030

VIEW Ver: 21.01.01A.0521.20

▲Maximum Reactions (lbs)

	Gravity			Non-Gravity		
Loc	R+	/ R-	/ Rh	/ Rw	/ U	/ RL
B	327	/-	/-	/226	/30	/127
E	65	/-	/-	/37	/-	/-
D	149	/-	/-	/102	/70	/-

Wind reactions based on MWFRS
B Brg Wid = 3.5 Min Req = 1.5
E Brg Wid = 1.5
D Brg Wid = 1.5
Bearing B is a rigid surface.
Members not listed have forces less than 375#

Lumber

Top chord: 2x4 SP M-31;
Bot chord: 2x4 SP M-31;
Webs: 2x4 SP M-31;

Wind

Wind loads based on MWFRS with additional C&C member design.

Wind loading based on both gable and hip roof types.

WILLIAM H. KRICK
LICENSE
No. 70861
STATE OF FLORIDA
PROFESSIONAL ENGINEER

COA #0278

02/10/2023

Florida Certificate of Product Approval #FL 1999

****WARNING**** READ AND FOLLOW ALL NOTES ON THIS DRAWING!
****IMPORTANT**** FURNISH THIS DRAWING TO ALL CONTRACTORS INCLUDING THE INSTALLERS

Trusses require extreme care in fabricating, handling, shipping, installing and bracing. Refer to and follow the latest edition of BCSI (Building Component Safety Information, by TPI and SBCA) for safety practices prior to performing these functions. Installers shall provide temporary bracing per BCSI. Unless noted otherwise, top chord shall have properly attached structural sheathing and bottom chord shall have a properly attached rigid ceiling. Locations shown for permanent lateral restraint of webs shall have bracing installed per BCSI sections B3, B7, or B10, as applicable. Apply plates to each face of truss and position as shown above and on the Joint Details, unless noted otherwise. Refer to drawings 160A-Z for standard plate positions. Refer to job's General Notes page for additional information.

Alpine, a division of ITW Building Components Group Inc. shall not be responsible for any deviation from this drawing, any failure to build the truss in conformance with ANSI/TPI 1, or for handling, shipping, installation and bracing of trusses. A seal on this drawing or cover page listing this drawing, indicates acceptance of professional engineering responsibility solely for the design shown. The suitability and use of this drawing for any structure is the responsibility of the Building Designer per ANSI/TPI 1 Sec.2.

For more information see these web sites: Alpine: alpineitw.com; TPI: tpinst.org; SBCA: sbcacomponents.com; ICC: iccsafe.org; AWC: awc.org

ALPINE AN ITW COMPANY
6750 Forum Drive
Suite 305
Orlando FL, 32821

SEQN: 409495 / JACK FROM: CDM	Ply: 1 Qty: 6	**Job Number:** 23-8926 Sunset 7 **Truss Label:** J09	Cust: R 215 JRef:1XN32150003 T17 DrwNo: 041.23.0912.21512 / WHK 02/10/2023

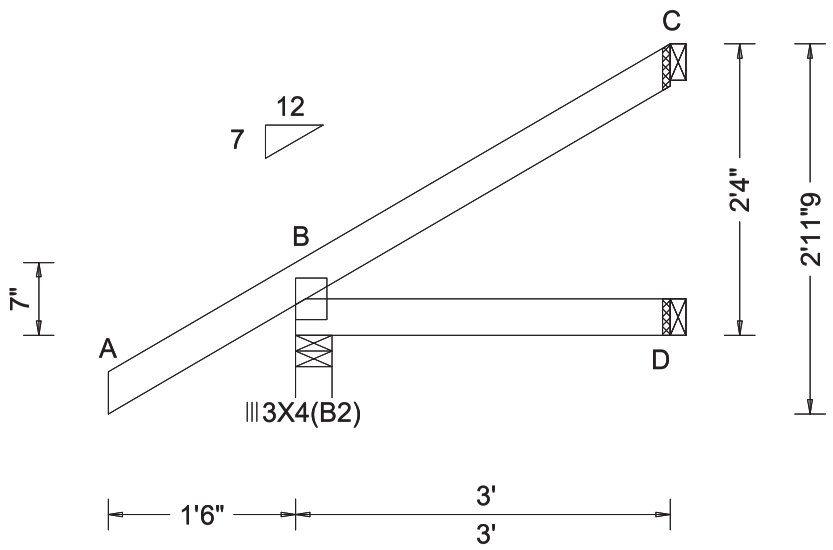

Loading Criteria (psf)	**Wind Criteria**	**Snow Criteria** (Pg,Pf in PSF)	**Defl/CSI Criteria**
TCLL: 20.00 TCDL: 10.00 BCLL: 0.00 BCDL: 10.00 Des Ld: 40.00 NCBCLL: 10.00 Soffit: 2.00 Load Duration: 1.25 Spacing: 24.0 "	Wind Std: ASCE 7-16 Speed: 130 mph Enclosure: Closed Risk Category: II EXP: C Kzt: NA Mean Height: 15.00 ft TCDL: 5.0 psf BCDL: 5.0 psf MWFRS Parallel Dist: 0 to h/2 C&C Dist a: 3.00 ft Loc. from endwall: not in 4.50 ft GCpi: 0.18 Wind Duration: 1.60	Pg: NA Ct: NA CAT: NA Pf: NA Ce: NA Lu: NA Cs: NA Snow Duration: NA Building Code: FBC 7th Ed. 2020 Res. TPI Std: 2014 Rep Fac: Yes FT/RT:20(0)/10(0) Plate Type(s): WAVE	PP Deflection in loc L/defl L/# VERT(LL): NA VERT(CL): NA HORZ(LL): -0.001 C - - HORZ(TL): 0.001 C - - Creep Factor: 2.0 Max TC CSI: 0.072 Max BC CSI: 0.033 Max Web CSI: 0.000 VIEW Ver: 21.01.01A.0521.20

▲Maximum Reactions (lbs)

	Gravity			Non-Gravity		
Loc	R+	/ R-	/ Rh	/ Rw	/ U	/ RL
B	255	/-	/-	/184	/31	/86
D	56	/-	/-	/31	/-	/-
C	69	/-	/-	/42	/46	/-

Wind reactions based on MWFRS
B Brg Wid = 3.5 Min Req = 1.5
D Brg Wid = 1.5
C Brg Wid = 1.5
Bearing B is a rigid surface.
Members not listed have forces less than 375#

Lumber

Top chord: 2x4 SP M-31;
Bot chord: 2x4 SP M-31;

Wind

Wind loads based on MWFRS with additional C&C member design.

Wind loading based on both gable and hip roof types.

WILLIAM H. KRICK
LICENSE
No. 70861
STATE OF FLORIDA
PROFESSIONAL ENGINEER

COA #0278

02/10/2023

Florida Certificate of Product Approval #FL 1999

****WARNING**** READ AND FOLLOW ALL NOTES ON THIS DRAWING!
****IMPORTANT**** FURNISH THIS DRAWING TO ALL CONTRACTORS INCLUDING THE INSTALLERS

Trusses require extreme care in fabricating, handling, shipping, installing and bracing. Refer to and follow the latest edition of BCSI (Building Component Safety Information, by TPI and SBCA) for safety practices prior to performing these functions. Installers shall provide temporary bracing per BCSI. Unless noted otherwise, top chord shall have properly attached structural sheathing and bottom chord shall have a properly attached rigid ceiling. Locations shown for permanent lateral restraint of webs shall have bracing installed per BCSI sections B3, B7, or B10, as applicable. Apply plates to each face of truss and position as shown above and on the Joint Details, unless noted otherwise. Refer to drawings 160A-Z for standard plate positions. Refer to job's General Notes page for additional information.

Alpine, a division of ITW Building Components Group Inc. shall not be responsible for any deviation from this drawing, any failure to build the truss in conformance with ANSI/TPI 1, or for handling, shipping, installation and bracing of trusses. A seal on this drawing or cover page listing this drawing, indicates acceptance of professional engineering responsibility solely for the design shown. The suitability and use of this drawing for any structure is the responsibility of the Building Designer per ANSI/TPI 1 Sec.2.

For more information see these web sites: Alpine: alpineitw.com; TPI: tpinst.org; SBCA: sbcacomponents.com; ICC: iccsafe.org; AWC: awc.org

ALPINE AN ITW COMPANY
6750 Forum Drive
Suite 305
Orlando FL, 32821

SEQN: 409496 / JACK FROM: CDM	Ply: 1 Qty: 2	**Job Number:** 23-8926 Sunset 7 **Truss Label:** J10	Cust: R 215 JRef:1XN32150003 T13 DrwNo: 041.23.0912.22465 / WHK 02/10/2023

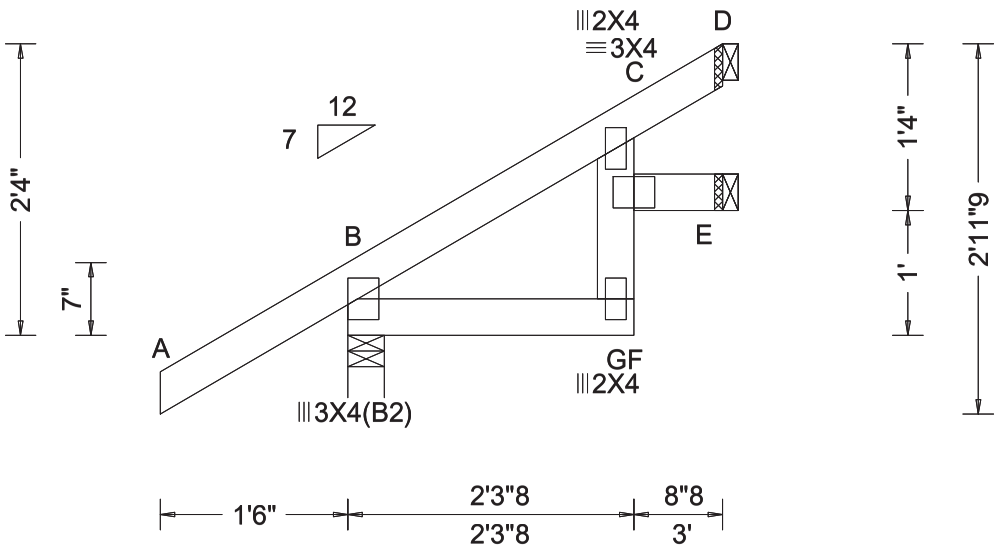

Loading Criteria (psf)

TCLL: 20.00
TCDL: 10.00
BCLL: 0.00
BCDL: 10.00
Des Ld: 40.00
NCBCLL: 10.00
Soffit: 2.00
Load Duration: 1.25
Spacing: 24.0 "

Wind Criteria

Wind Std: ASCE 7-16
Speed: 130 mph
Enclosure: Closed
Risk Category: II
EXP: C Kzt: NA
Mean Height: 15.00 ft
TCDL: 5.0 psf
BCDL: 5.0 psf
MWFRS Parallel Dist: 0 to h/2
C&C Dist a: 3.00 ft
Loc. from endwall: not in 4.50 ft
GCpi: 0.18
Wind Duration: 1.60

Snow Criteria (Pg,Pf in PSF)

Pg: NA Ct: NA CAT: NA
Pf: NA Ce: NA
Lu: NA Cs: NA
Snow Duration: NA

Building Code:
FBC 7th Ed. 2020 Res.
TPI Std: 2014
Rep Fac: Yes
FT/RT:20(0)/10(0)
Plate Type(s):
WAVE

Defl/CSI Criteria

PP Deflection in	loc	L/defl	L/#
VERT(LL): 0.003	F	999	240
VERT(CL): 0.006	F	999	180
HORZ(LL): -0.002	C	-	-
HORZ(TL): 0.003	C	-	-

Creep Factor: 2.0
Max TC CSI: 0.072
Max BC CSI: 0.018
Max Web CSI: 0.008

VIEW Ver: 21.01.01A.0521.20

▲Maximum Reactions (lbs)

	Gravity			Non-Gravity		
Loc	R+	/ R-	/ Rh	/ Rw	/ U	/ RL
B	255	/-	/-	/184	/31	/86
E	22	/-	/-	/16	/1	/-
D	80	/-	/-	/56	/33	/-

Wind reactions based on MWFRS
B Brg Wid = 3.5 Min Req = 1.5
E Brg Wid = 1.5
D Brg Wid = 1.5
Bearing B is a rigid surface.
Members not listed have forces less than 375#

Lumber

Top chord: 2x4 SP M-31;
Bot chord: 2x4 SP M-31;
Webs: 2x4 SP M-31;

Wind

Wind loads based on MWFRS with additional C&C member design.

Wind loading based on both gable and hip roof types.

WILLIAM H. KRICK
LICENSE
No. 70861
STATE OF FLORIDA
PROFESSIONAL ENGINEER

COA #0278
Florida Certificate of Product Approval #FL 1999

02/10/2023

****WARNING**** READ AND FOLLOW ALL NOTES ON THIS DRAWING!
****IMPORTANT**** FURNISH THIS DRAWING TO ALL CONTRACTORS INCLUDING THE INSTALLERS

Trusses require extreme care in fabricating, handling, shipping, installing and bracing. Refer to and follow the latest edition of BCSI (Building Component Safety Information, by TPI and SBCA) for safety practices prior to performing these functions. Installers shall provide temporary bracing per BCSI. Unless noted otherwise, top chord shall have properly attached structural sheathing and bottom chord shall have a properly attached rigid ceiling. Locations shown for permanent lateral restraint of webs shall have bracing installed per BCSI sections B3, B7, or B10, as applicable. Apply plates to each face of truss and position as shown above and on the Joint Details, unless noted otherwise. Refer to drawings 160A-Z for standard plate positions. Refer to job's General Notes page for additional information.

Alpine, a division of ITW Building Components Group Inc. shall not be responsible for any deviation from this drawing, any failure to build the truss in conformance with ANSI/TPI 1, or for handling, shipping, installation and bracing of trusses. A seal on this drawing or cover page listing this drawing, indicates acceptance of professional engineering responsibility solely for the design shown. The suitability and use of this drawing for any structure is the responsibility of the Building Designer per ANSI/TPI 1 Sec.2.

For more information see these web sites: Alpine: alpineitw.com; TPI: tpinst.org; SBCA: sbcacomponents.com; ICC: iccsafe.org; AWC: awc.org

ALPINE AN ITW COMPANY
6750 Forum Drive
Suite 305
Orlando FL, 32821

SEQN: 409497 / JACK FROM: CDM	Ply: 1 Qty: 8	**Job Number:** 23-8926 Sunset 7 **Truss Label:** J11	Cust: R 215 JRef:1XN32150003 T36 DrwNo: 041.23.0912.21614 / WHK 02/10/2023

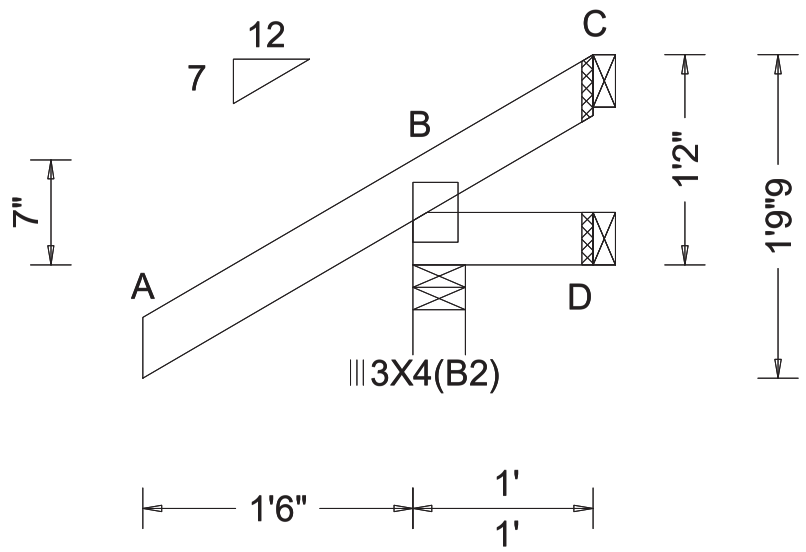

Loading Criteria (psf)	**Wind Criteria**	**Snow Criteria** (Pg,Pf in PSF)	**Defl/CSI Criteria**
TCLL: 20.00 TCDL: 10.00 BCLL: 0.00 BCDL: 10.00 Des Ld: 40.00 NCBCLL: 10.00 Soffit: 2.00 Load Duration: 1.25 Spacing: 24.0 "	Wind Std: ASCE 7-16 Speed: 130 mph Enclosure: Closed Risk Category: II EXP: C Kzt: NA Mean Height: 15.00 ft TCDL: 5.0 psf BCDL: 5.0 psf MWFRS Parallel Dist: 0 to h/2 C&C Dist a: 3.00 ft Loc. from endwall: Any GCpi: 0.18 Wind Duration: 1.60	Pg: NA Ct: NA CAT: NA Pf: NA Ce: NA Lu: NA Cs: NA Snow Duration: NA Building Code: FBC 7th Ed. 2020 Res. TPI Std: 2014 Rep Fac: Yes FT/RT:20(0)/10(0) Plate Type(s): WAVE	PP Deflection in loc L/defl L/# VERT(LL): NA VERT(CL): NA HORZ(LL): -0.001 C - - HORZ(TL): 0.001 C - - Creep Factor: 2.0 Max TC CSI: 0.093 Max BC CSI: 0.010 Max Web CSI: 0.000 VIEW Ver: 21.01.01A.0521.20

▲Maximum Reactions (lbs)

	Gravity			Non-Gravity		
Loc	R+	/ R-	/ Rh	/ Rw	/ U	/ RL
B	229	/-	/-	/180	/51	/45
D	14	/-1	/-	/11	/2	/-
C	-	/-43	/-	/30	/44	/-

Wind reactions based on MWFRS
B Brg Wid = 3.5 Min Req = 1.5
D Brg Wid = 1.5
C Brg Wid = 1.5
Bearing B is a rigid surface.
Members not listed have forces less than 375#

Lumber

Top chord: 2x4 SP M-31;
Bot chord: 2x4 SP M-31;

Wind

Wind loads based on MWFRS with additional C&C member design.

Wind loading based on both gable and hip roof types.

WILLIAM H. KRICK
LICENSE
No. 70861
STATE OF FLORIDA
PROFESSIONAL ENGINEER

COA #0278
02/10/2023
Florida Certificate of Product Approval #FL 1999

****WARNING**** READ AND FOLLOW ALL NOTES ON THIS DRAWING!
****IMPORTANT**** FURNISH THIS DRAWING TO ALL CONTRACTORS INCLUDING THE INSTALLERS

Trusses require extreme care in fabricating, handling, shipping, installing and bracing. Refer to and follow the latest edition of BCSI (Building Component Safety Information, by TPI and SBCA) for safety practices prior to performing these functions. Installers shall provide temporary bracing per BCSI. Unless noted otherwise, top chord shall have properly attached structural sheathing and bottom chord shall have a properly attached rigid ceiling. Locations shown for permanent lateral restraint of webs shall have bracing installed per BCSI sections B3, B7, or B10, as applicable. Apply plates to each face of truss and position as shown above and on the Joint Details, unless noted otherwise. Refer to drawings 160A-Z for standard plate positions. Refer to job's General Notes page for additional information.

Alpine, a division of ITW Building Components Group Inc. shall not be responsible for any deviation from this drawing, any failure to build the truss in conformance with ANSI/TPI 1, or for handling, shipping, installation and bracing of trusses. A seal on this drawing or cover page listing this drawing, indicates acceptance of professional engineering responsibility solely for the design shown. The suitability and use of this drawing for any structure is the responsibility of the Building Designer per ANSI/TPI 1 Sec.2.

For more information see these web sites: Alpine: alpineitw.com; TPI: tpinst.org; SBCA: sbcacomponents.com; ICC: iccsafe.org; AWC: awc.org

ALPINE AN ITW COMPANY
6750 Forum Drive
Suite 305
Orlando FL, 32821

Gable Stud Reinforcement Detail

ASCE 7-16: 140 mph Wind Speed, 15' Mean Height, Enclosed, Exposure C, Kzt = 1.00

Or: 120 mph Wind Speed, 15' Mean Height, Partially Enclosed, Exposure C, Kzt = 1.00
Or: 120 mph Wind Speed, 15' Mean Height, Enclosed, Exposure D, Kzt = 1.00
Or: 100 mph Wind Speed, 15' Mean Height, Partially Enclosed, Exposure D, Kzt = 1.00

Max Gable Vertical Length	2x4 Gable Vertical Spacing	Species	Brace Grade	No Braces	(1) 1x4 "L" Brace *		(1) 2x4 "L" Brace *		(2) 2x4 "L" Brace **		(1) 2x6 "L" Brace *		(2) 2x6 "L" Brace **	
					Group A	Group B	Group A	Group B	Group A	Group B	Group A	Group B	Group A	Group B
	24" o.c.	SPF HF	#1 / #2	4' 3"	7' 3"	7' 7"	8' 7"	8' 11"	10' 3"	10' 8"	13' 6"	14' 0"	14' 0"	14' 0"
			#3	4' 1"	6' 7"	7' 1"	8' 6"	8' 10"	10' 1"	10' 6"	13' 4"	13' 10"	14' 0"	14' 0"
			Stud	4' 1"	6' 7"	7' 0"	8' 6"	8' 10"	10' 1"	10' 6"	13' 4"	13' 10"	14' 0"	14' 0"
			Standard	4' 1"	5' 8"	6' 0"	7' 7"	8' 1"	10' 1"	10' 6"	11' 10"	12' 8"	14' 0"	14' 0"
		SP DFL	#1	4' 6"	7' 4"	7' 8"	8' 8"	9' 0"	10' 4"	10' 9"	13' 8"	14' 0"	14' 0"	14' 0"
			#2	4' 3"	7' 3"	7' 7"	8' 7"	8' 11"	10' 3"	10' 8"	13' 6"	14' 0"	14' 0"	14' 0"
			#3	4' 2"	6' 0"	6' 4"	7' 11"	8' 6"	10' 2"	10' 7"	12' 5"	13' 4"	14' 0"	14' 0"
			Stud	4' 2"	6' 0"	6' 4"	7' 11"	8' 6"	10' 2"	10' 7"	12' 5"	13' 4"	14' 0"	14' 0"
			Standard	4' 0"	5' 3"	5' 7"	7' 0"	7' 6"	9' 6"	10' 2"	11' 0"	11' 10"	14' 0"	14' 0"
	16" o.c.	SPF HF	#1 / #2	4' 11"	8' 4"	8' 8"	9' 10"	10' 3"	11' 8"	12' 2"	14' 0"	14' 0"	14' 0"	14' 0"
			#3	4' 8"	8' 1"	8' 8"	9' 8"	10' 1"	11' 7"	12' 1"	14' 0"	14' 0"	14' 0"	14' 0"
			Stud	4' 8"	8' 1"	8' 6"	9' 8"	10' 1"	11' 7"	12' 1"	14' 0"	14' 0"	14' 0"	14' 0"
			Standard	4' 8"	6' 11"	7' 5"	9' 3"	9' 11"	11' 7"	12' 1"	14' 0"	14' 0"	14' 0"	14' 0"
		SP DFL	#1	5' 1"	8' 5"	8' 9"	9' 11"	10' 4"	11' 10"	12' 4"	14' 0"	14' 0"	14' 0"	14' 0"
			#2	4' 11"	8' 4"	8' 8"	9' 10"	10' 3"	11' 8"	12' 2"	14' 0"	14' 0"	14' 0"	14' 0"
			#3	4' 9"	7' 4"	7' 9"	9' 9"	10' 2"	11' 8"	12' 1"	14' 0"	14' 0"	14' 0"	14' 0"
			Stud	4' 9"	7' 4"	7' 9"	9' 9"	10' 2"	11' 8"	12' 1"	14' 0"	14' 0"	14' 0"	14' 0"
			Standard	4' 8"	6' 5"	6' 10"	8' 7"	9' 2"	11' 7"	12' 1"	13' 6"	14' 0"	14' 0"	14' 0"
	12" o.c.	SPF HF	#1 / #2	5' 5"	9' 2"	9' 6"	10' 10"	11' 3"	11' 8"	13' 5"	14' 0"	14' 0"	14' 0"	14' 0"
			#3	5' 1"	9' 0"	9' 4"	10' 8"	11' 1"	12' 9"	13' 3"	14' 0"	14' 0"	14' 0"	14' 0"
			Stud	5' 1"	9' 0"	9' 4"	10' 8"	11' 1"	12' 9"	13' 3"	14' 0"	14' 0"	14' 0"	14' 0"
			Standard	5' 1"	8' 0"	8' 6"	10' 8"	11' 1"	12' 9"	13' 3"	14' 0"	14' 0"	14' 0"	14' 0"
		SP DFL	#1	5' 8"	9' 3"	9' 8"	10' 11"	11' 4"	13' 0"	13' 6"	14' 0"	14' 0"	14' 0"	14' 0"
			#2	5' 5"	9' 2"	9' 6"	10' 10"	11' 3"	12' 11"	13' 5"	14' 0"	14' 0"	14' 0"	14' 0"
			#3	5' 3"	8' 5"	9' 0"	10' 9"	11' 2"	12' 10"	13' 4"	14' 0"	14' 0"	14' 0"	14' 0"
			Stud	5' 3"	8' 5"	9' 0"	10' 9"	11' 2"	12' 10"	13' 4"	14' 0"	14' 0"	14' 0"	14' 0"
			Standard	5' 1"	7' 5"	7' 11"	9' 11"	10' 7"	12' 9"	13' 3"	14' 0"	14' 0"	14' 0"	14' 0"

Bracing Group Species and Grades:

Group A:

Spruce-Pine-Fir

#1 / #2	Standard
#3	Stud

Hem-Fir

#2	Stud
#3	Standard

Douglas Fir-Larch

#3
Stud
Standard

Southern Pine***

#3
Stud
Standard

Group B:

Hem-Fir

#1 & Btr
#1

Douglas Fir-Larch

#1
#2

Southern Pine***

#1
#2

1x4 Braces shall be SRB (Stress-Rated Board).

***For 1x4 So. Pine use only Industrial 55 or Industrial 45 Stress-Rated Boards. Group B values may be used with these grades.

Gable Truss Detail Notes:

Wind Load deflection criterion is L/240.

Provide uplift connections for 55 plf over continuous bearing (5 psf TC Dead Load).

Gable end supports load from 4' 0" outlookers with 2' 0" overhang, or 12" plywood overhang.

Attach "L" braces with 10d (0.128"x3.0" min) nails.

* For (1) "L" brace: space nails at 2" o.c. in 18" end zones and 4" o.c. between zones.

** For (2) "L" braces: space nails at 3" o.c. in 18" end zones and 6" o.c. between zones.

"L" bracing must be a minimum of 80% of web member length.

Gable Vertical Plate Sizes

Vertical Length	No Splice
Less than 4' 0"	1X4 or 2X3
Greater than 4' 0"	3X4

+ Refer to common truss design for peak, splice, and heel plates.

Refer to the Building Designer for conditions not addressed by this detail.

Diagonal brace option: vertical length may be doubled when diagonal brace is used. Connect diagonal brace for 450# at each end. Max web total length is 14'.

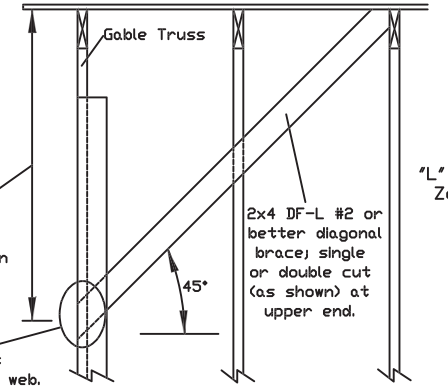

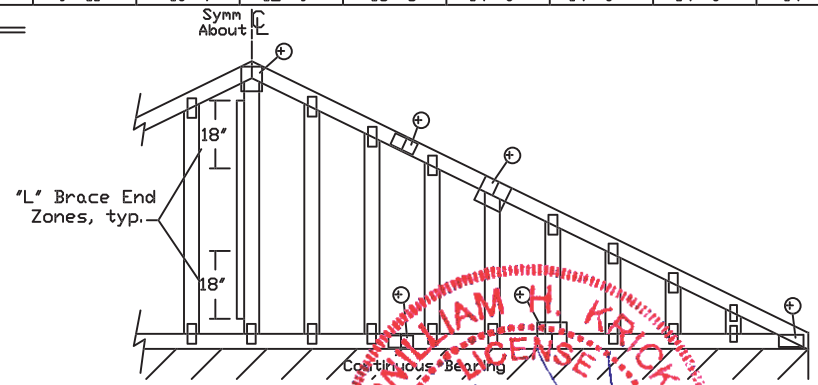

Refer to chart above for max gable vertical length.

WARNING READ AND FOLLOW ALL NOTES ON THIS DRAWING!
IMPORTANT FURNISH THIS DRAWING TO ALL CONTRACTORS INCLUDING THE INSTALLERS.

Trusses require extreme care in fabricating, handling, shipping, installing and bracing. Refer to and follow the latest edition of BCSI (Building Component Safety Information, by TPI and SBCA) for safety practices prior to performing these functions. Installers shall provide temporary bracing per BCSI. Unless noted otherwise, top chord shall have properly attached structural sheathing and bottom chord shall have a properly attached rigid ceiling. Locations shown for permanent lateral restraint of webs shall have bracing installed per BCSI sections B3, B7 or B10, as applicable. Apply plates to each face of truss and position as shown above and on the Joint Details, unless noted otherwise. Refer to drawings 160A-Z for standard plate positions.

Alpine, a division of ITW Building Components Group Inc. shall not be responsible for any deviation from this drawing, any failure to build the truss in conformance with ANSI/TPI 1, or for handling, shipping, installation & bracing of trusses.

A seal on this drawing or cover page listing this drawing, indicates acceptance of professional engineering responsibility solely for the design shown. The suitability and use of this drawing for any structure is the responsibility of the Building Designer per ANSI/TPI 1 Sec.2.

For more information see this job's general notes page and these web sites:
ALPINE: www.alpineitw.com; TPI: www.tpinst.org; SBCA: www.sbcacomponents.com; ICC: www.iccsafe.org

ALPINE AN ITW COMPANY
155 Harlem Ave
North Building, 4th Floor
Glenview, IL 60025

WILLIAM H. KRICK LICENSE No. 70861 STATE OF FLORIDA PROFESSIONAL ENGINEER

COA #0.278 02/10/2023
Florida Certificate of Product Approval #FL 1999

MAX. TOT. LD. 60 PSF

MAX. SPACING 24.0"

REF	ASCE7-16-GAB14015
DATE	01/26/2018
DRWG	A14015ENC160118

CLR Reinforcing Member Substitution

This detail is to be used when a Continuous Lateral Restraint (CLR) is specified on a truss design but an alternative web reinforcement method is desired.

Notes:

This detail is only applicable for changing the specified CLR shown on single ply sealed designs to T-reinforcement or L-reinforecement or scab reinforcement.

Alternative reinforcement specified in chart below may be conservative. For minimum alternative reinforcement, re-run design with appropriate reinforcement type.

Use scabs instead of L- or T- reinforcement on webs with intersecting truss joints, such as K-web joints, that may interfere with proper application along the narrow face of the web.

Web Member Size	Specified CLR Restraint	Alternative Reinforecement T- or L- Reinf.	Alternative Reinforecement Scab Reinf.
2x3 or 2x4	1 row	2x4	1-2x4
2x3 or 2x4	2 rows	2x6	2-2x4
2x6	1 row	2x4	1-2x6
2x6	2 rows	2x6	2-2x4(✱)
2x8	1 row	2x6	1-2x8
2x8	2 rows	2x6	2-2x6(✱)

T-reinforcement, L-reinforcement, or scab reinforcement to be same species and grade or better than web member unless specified otherwise on Engineer's sealed design.

(✱) Center scab on wide face of web. Apply (1) scab to each face of web.

T-Reinforcement or L-Reinforcement:

Apply to either side of web narrow face. Attach with 10d (0.128"x3.0",min) nails at 6" o.c. Reinforcing member is a minimum 80% of web member length.

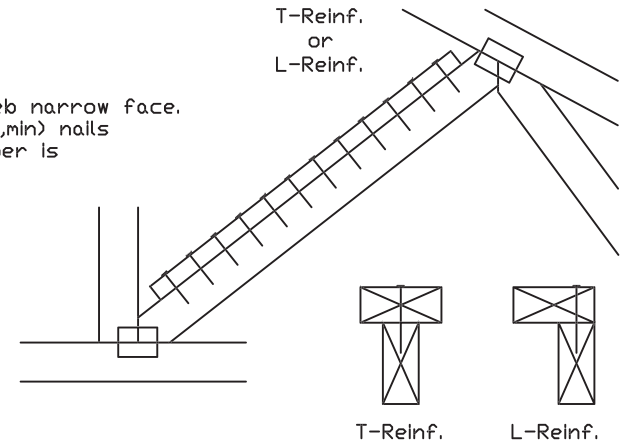

Scab Reinforcement:

Apply scab(s) to wide face of web. No more than (1) scab per face. Attach with 10d (0.128"x3.0",min) nails at 6" o.c. Reinforcing member is a minimum 80% of web member length.

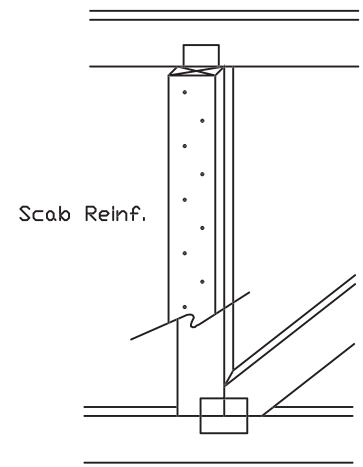

WILLIAM H. KRICK
LICENSE
No. 70861
STATE OF FLORIDA
PROFESSIONAL ENGINEER

COA #0 278 02/10/2023
Florida Certificate of Product Approval #FL 1999

ALPINE
AN ITW COMPANY
155 Harlem Ave
North Building, 4th Floor
Glenview, IL 60025

WARNING READ AND FOLLOW ALL NOTES ON THIS DRAWING!
IMPORTANT FURNISH THIS DRAWING TO ALL CONTRACTORS INCLUDING THE INSTALLERS.

Trusses require extreme care in fabricating, handling, shipping, installing and bracing. Refer to and follow the latest edition of BCSI (Building Component Safety Information, by TPI and SBCA) for safety practices prior to performing these functions. Installers shall provide temporary bracing per BCSI. Unless noted otherwise, top chord shall have properly attached structural sheathing and bottom chord shall have a properly attached rigid ceiling. Locations shown for permanent lateral restraint of webs shall have bracing installed per BCSI sections B3, B7 or B10, as applicable. Apply plates to each face of truss and position as shown above and on the Joint Details, unless noted otherwise. Refer to drawings 160A-Z for standard plate positions.

Alpine, a division of ITW Building Components Group Inc. shall not be responsible for any deviation from this drawing, any failure to build the truss in conformance with ANSI/TPI 1, or for handling, shipping, installation & bracing of trusses.

A seal on this drawing or cover page listing this drawing, indicates acceptance of professional engineering responsibility solely for the design shown. The suitability and use of this drawing for any structure is the responsibility of the Building Designer per ANSI/TPI 1 Sec.2.

For more information see this job's general notes page and these web sites:
ALPINE: www.alpineitw.com; TPI: www.tpinst.org; SBCA: www.sbcacomponents.com; ICC: www.iccsafe.org

TC LL	PSF	
TC DL	PSF	
BC DL	PSF	
BC LL	PSF	
TOT. LD.	PSF	
DUR. FAC.		
SPACING		

REF	CLR Subst.
DATE	01/02/19
DRWG	BRCLBSUB0119

NAIL SPACING DETAIL

MINIMUM SPACING FOR SINGLE BLOCK IS SHOWN. DOUBLE NAIL SPACINGS AND STAGGER NAILING FOR TWO BLOCKS. GREATER SPACING MAY BE REQUIRED TO AVOID SPLITTING.

BLOCK LOCATION, SIZE, LENGTH,GRADE AND TOTAL NUMBER AND TYPE OF NAILS ARE TO BE SPECIFIED ON SEALED DESIGN REFERENCING THIS DETAIL.

LOAD PERPENDICULAR TO GRAIN
A - EDGE DISTANCE AND SPACING BETWEEN STAGGERED ROWS OF NAILS (6 NAIL DIAMETERS)
B - SPACING OF NAILS IN A ROW (12 NAIL DIAMETERS)
C - END DISTANCE (15 NAIL DIAMETERS)

LOAD PARALLEL TO GRAIN
A - EDGE DISTANCE (6 NAIL DIAMETERS)
C - SPACING OF NAILS IN A ROW AND END DISTANCE (15 NAIL DIAMETERS)
D - SPACING BETWEEN STAGGERED ROWS OF NAILS (7 1/2 NAIL DIAMETERS)

IF NAIL HOLES ARE PREBORED, SOME SPACING MAY BE REDUCED BY THE AMOUNTS GIVEN BELOW:
* SPACING MAY BE REDUCED BY 50%
** SPACING MAY BE REDUCED BY 33%

MINIMUM NAIL SPACING DISTANCES

NAIL TYPE	DISTANCES A	B*	C**	D
8d BOX (0.113"X 2.5",MIN)	3/4"	1 3/8"	1 3/4"	7/8"
10d BOX (0.128"X 3.",MIN)	7/8"	1 5/8"	2"	1"
12d BOX (0.128"X 3.25",MIN)	7/8"	1 5/8"	2"	1"
16d BOX (0.135"X 3.5",MIN)	7/8"	1 5/8"	2 1/8"	1 1/8"
20d BOX (0.148"X 4.",MIN)	1"	1 7/8"	2 1/4"	1 1/8"
8d COMMON (0.131"X 2.5",MIN)	7/8"	1 5/8"	2"	1"
10d COMMON (0.148"X 3.",MIN)	1"	1 7/8"	2 1/4"	1 1/8"
12d COMMON (0.148"X 3.25",MIN)	1"	1 7/8"	2 1/4"	1 1/8"
16d COMMON (0.162"X 3.5",MIN)	1'	2"	2 1/2"	1 1/4"
GUN (0.120"X 2.5",MIN)	3/4"	1 1/2"	1 7/8"	1"
GUN (0.131"X 2.5",MIN)	7/8"	1 5/8"	2"	1"
GUN (0.120"X 3.",MIN)	3/4"	1 1/2"	1 7/8"	1"
GUN (0.131"X 3.",MIN)	7/8"	1 5/8"	2"	1"

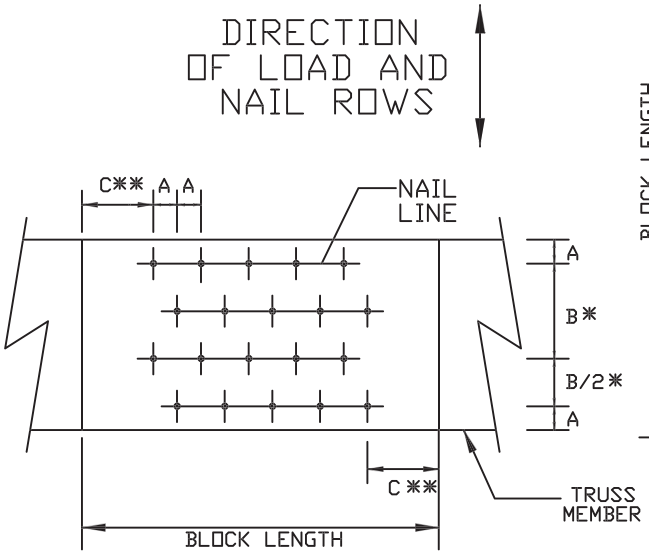

LOAD APPLIED PERPENDICULAR TO GRAIN

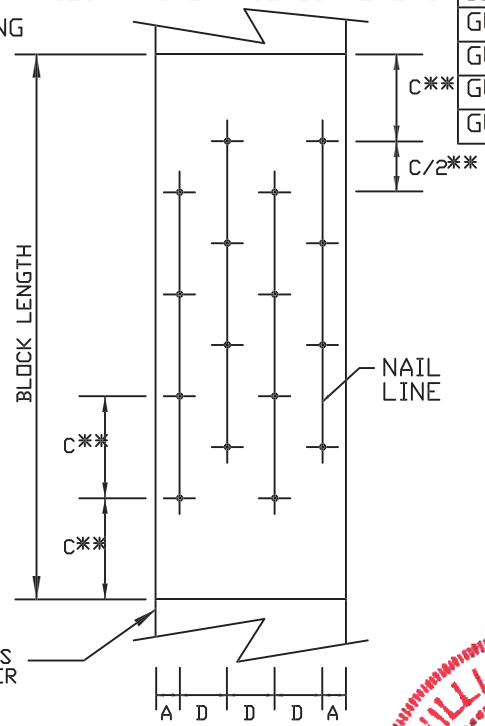

LOAD APPLIED PARALLEL TO GRAIN

WILLIAM H. KRICK LICENSE No. 70861 STATE OF FLORIDA PROFESSIONAL ENGINEER

COA #0278 02/10/2023
Florida Certificate of Product Approval #FL 1999

ALPINE AN ITW COMPANY
155 Harlem Ave
North Building, 4th Floor
Glenview, IL 60025

WARNING READ AND FOLLOW ALL NOTES ON THIS DRAWING!
IMPORTANT FURNISH THIS DRAWING TO ALL CONTRACTORS INCLUDING THE INSTALLERS.

Trusses require extreme care in fabricating, handling, shipping, installing and bracing. Refer to and follow the latest edition of BCSI (Building Component Safety Information, by TPI and SBCA) for safety practices prior to performing these functions. Installers shall provide temporary bracing per BCSI. Unless noted otherwise, top chord shall have properly attached structural sheathing and bottom chord shall have a properly attached rigid ceiling. Locations shown for permanent lateral restraint of webs shall have bracing installed per BCSI sections B3, B7 or B10, as applicable. Apply plates to each face of truss and position as shown above and on the Joint Details, unless noted otherwise. Refer to drawings 160A-Z for standard plate positions.

Alpine, a division of ITW Building Components Group Inc. shall not be responsible for any deviation from this drawing, any failure to build the truss in conformance with ANSI/TPI 1, or for handling, shipping, installation & bracing of trusses.

A seal on this drawing or cover page listing this drawing, indicates acceptance of professional engineering responsibility solely for the design shown. The suitability and use of this drawing for any structure is the responsibility of the Building Designer per ANSI/TPI 1 Sec.2.

For more information see this job's general notes page and these web sites:
ALPINE: www.alpineitw.com; TPI: www.tpinst.org; SBCA: www.sbcacomponents.com; ICC: www.iccsafe.org

REF	NAIL SPACE
DATE	10/01/14
DRWG	CNNAILSP1014

Commentary: Deflection and Camber

Camber may be built into trusses to compensate for the vertical deflection that results from the application of loads. Providing camber has the following advantages:

- Helps to ensure level ceilings and floors after dead loads are applied.
- Facilitates drainage to avoid ponding on flat or low slope roofs.
- Compensates for different deflection characteristics between adjacent trusses.
- Improves appearance of garage door headers and other long spans that can appear to "sag."
- Avoids "dips" in roof ridgelines at the transition from the gable to adjacent clear span trusses.

In accordance with ANSI/TPI 1 the Building Designer, through the Construction Documents, shall provide the location, direction, and magnitude of all loads attributable to ponding that may occur due to the design of the roof drainage system. The Building Designer shall also specify any dead load, live load, and in-service creep deflection criteria for flat or low-slope roofs subject to ponding loads.

The amount of camber is dependent on the truss type, span, loading, application, etceteras.

More restrictive limits for allowable deflection and slenderness ratio (L/D) may be required to help control vibration.

The following tables are provided as guidelines for limiting deflection and estimating camber. Conditions or codes may exist that require exceeding these recommendations, or past experience may warrant using more stringent limitations.

L = Span of Truss (inches)
D = Depth of Truss at Deflection Point (inches)

Recommended Truss Deflection Limits

Truss Type	L/D	Deflection Limits	
		Live Load	Total Load
Pitched Roof Trusses	24	L/240 (vertical)	L/180 (vertical)
Floor of Room-In-Attic Trusses	24	L/360 (vertical)	L/240 (vertical)
Flat or Shallow Pitched Roof Trusses	24	L/360 (vertical)	L/240 (vertical)
Residential Floor Trusses	24	L/360 (vertical)	L/240 (vertical)
Commercial Floor Trusses	20	L/480 (vertical)	L/240 (vertical)
Scissors Trusses	24	0.75" (horizontal)	1.25" (horizontal)

Truss Type	Recommended Camber
Pitched Trusses	1.00 x Deflection from Actual Dead Load
Sloping Parallel Chord Trusses	1.5 x Vertical Deflection from Actual Dead Load
Floor Trusses	(0.25 x Deflection from Live Load) + Actual Dead Load
Flat Roof Trusses	(0.25 x Deflection from Live Load) + (1.5 x Design Dead Load Deflection)

Note: The actual dead load may be considerably less than the design dead load.

WILLIAM H. KRICK
LICENSE
No. 70861
STATE OF FLORIDA
PROFESSIONAL ENGINEER

COA #0278 02/10/2023
Florida Certificate of Product Approval #FL 1999

ALPINE
AN ITW COMPANY
155 Harlem Ave
North Building, 4th Floor
Glenview, IL 60025

WARNING! READ AND FOLLOW ALL NOTES ON THIS DRAWING!
IMPORTANT FURNISH THIS DRAWING TO ALL CONTRACTORS INCLUDING THE INSTALLERS!

Trusses require extreme care in fabricating, handling, shipping, installing and bracing. Refer to and follow the latest edition of BCSI (Building Component Safety Information, by TPI and SBCA) for safety practices prior to performing these functions. Installers shall provide temporary bracing per BCSI. Unless noted otherwise, top chord shall have properly attached structural sheathing and bottom chord shall have a properly attached rigid ceiling. Locations shown for permanent lateral restraint of webs shall have bracing installed per BCSI sections B3, B7 or B10, as applicable. Apply plates to each face of truss and position as shown above and on the Joint Details, unless noted otherwise. Refer to drawings 160A-Z for standard plate positions.

Alpine, a division of ITW Building Components Group Inc. shall not be responsible for any deviation from this drawing, any failure to build the truss in conformance with ANSI/TPI 1, or for handling, shipping, installation & bracing of trusses.

A seal on this drawing or cover page listing this drawing, indicates acceptance of professional engineering responsibility solely for the design shown. The suitability and use of this drawing for any structure is the responsibility of the Building Designer per ANSI/TPI 1 Sec.2.

For more information see this job's general notes page and these web sites:
ALPINE: www.alpineitw.com; TPI: www.tpinst.org; SBCA: www.sbcacomponents.com; ICC: www.iccsafe.org

REF	DEFLEC/CAMB
DATE	10/01/14
DRWG	DEFLCAMB1014

Gable Detail

For Let-in Verticals

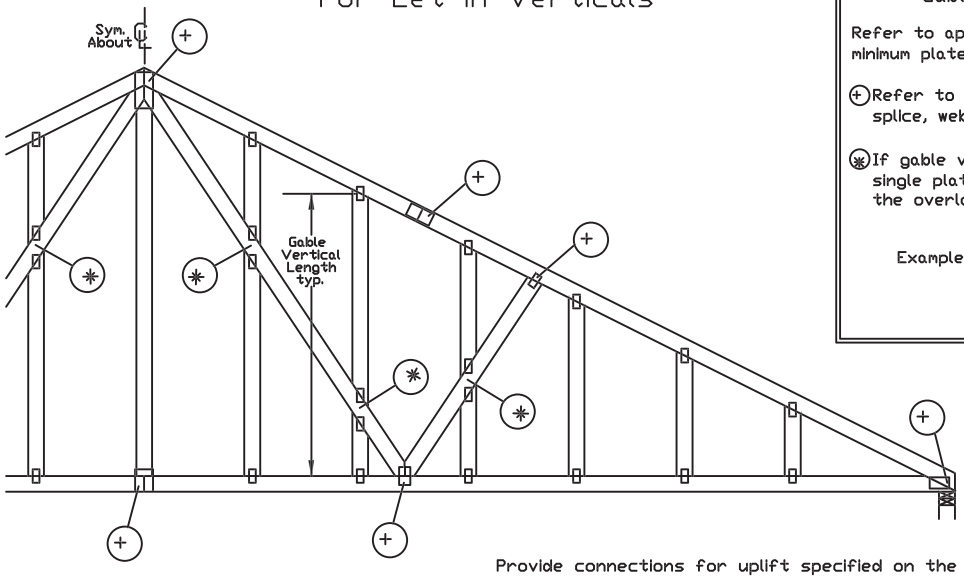

Gable Truss Plate Sizes

Refer to appropriate Alpine gable detail for minimum plate sizes for vertical studs.

(+) Refer to Engineered truss design for peak, splice, web, and heel plates.

(✱) If gable vertical plates overlap, use a single plate that covers the total area of the overlapped plates to span the web.

Example:

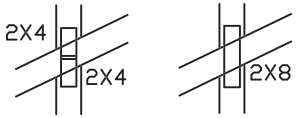

"T" Reinforcement Attachment Detail

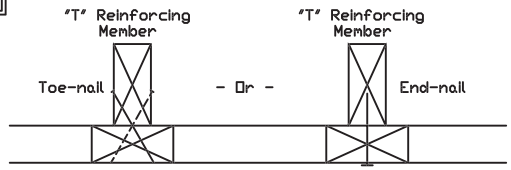

Provide connections for uplift specified on the engineered truss design.

Attach each "T" reinforcing member with

End Driven Nails:
10d Common (0.148"x 3.",min) Nails at 4" o.c. plus
(4) nails in the top and bottom chords.

Toenailed Nails:
10d Common (0.148"x3",min) Toenails at 4" o.c. plus
(4) toenails in the top and bottom chords.

This detail to be used with the appropriate Alpine gable detail for ASCE wind load.

ASCE 7-05 Gable Detail Drawings
A13015051014, A12015051014, A11015051014, A10015051014, A14015051014, A13030051014, A12030051014, A11030051014, A10030051014, A14030051014

ASCE 7-10 & ASCE 7-16 Gable Detail Drawings
A11515ENC100118, A12015ENC100118, A14015ENC100118, A16015ENC100118, A18015ENC100118, A20015ENC100118, A20015END100118, A20015PED100118, A11530ENC100118, A12030ENC100118, A14030ENC100118, A16030ENC100118, A18030ENC100118, A20030ENC100118, A20030END100118, A20030PED100118, S11515ENC100118, S12015ENC100118, S14015ENC100118, S16015ENC100118, S18015ENC100118, S20015ENC100118, S20015END100118, S20015PED100118, S11530ENC100118, S12030ENC100118, S14030ENC100118, S16030ENC100118, S18030ENC100118, S20030ENC100118, S20030END100118, S20030PED100118

See appropriate Alpine gable detail for maximum "T" reinforced gable vertical length.

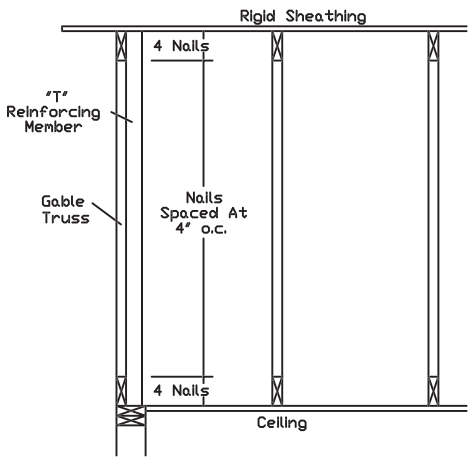

"T" Reinforcing Member Increase

To convert from "L" to "T" reinforcing members, multiply "T" increase by length (based on appropriate Alpine gable detail).

Maximum allowable "T" reinforced gable vertical length is 14' from top to bottom chord.

"T" reinforcing member material must match size, specie, and grade of the "L" reinforcing member.

Web Length Increase w/ "T" Brace

"T" Reinf. Mbr. Size	"T" Increase
2x4	30 %
2x6	20 %

Example:
ASCE 7-10 Wind Speed = 120 mph
Mean Roof Height = 30 ft, Kzt = 1.00
Gable Vertical = 24"o.c. SP #3
"T" Reinforcing Member Size = 2x4
"T" Brace Increase (From Above) = 30% = 1.30
(1) 2x4 "L" Brace Length = 8' 7"
Maximum "T" Reinforced Gable Vertical Length
1.30 x 8' 7" = 11' 2"

ALPINE AN ITW COMPANY
155 Harlem Ave
North Building, 4th Floor
Glenview, IL 60025

WARNING! READ AND FOLLOW ALL NOTES ON THIS DRAWING!
IMPORTANT! FURNISH THIS DRAWING TO ALL CONTRACTORS INCLUDING THE INSTALLERS!

Trusses require extreme care in fabricating, handling, shipping, installing and bracing. Refer to and follow the latest edition of BCSI (Building Component Safety Information, by TPI and SBCA) for safety practices prior to performing these functions. Installers shall provide temporary bracing per BCSI. Unless noted otherwise, top chord shall have properly attached structural sheathing and bottom chord shall have a properly attached rigid ceiling. Locations shown for permanent lateral restraint of webs shall have bracing installed per BCSI sections B3, B7 or B10, as applicable. Apply plates to each face of truss and position as shown above and on the Joint Details, unless noted otherwise. Refer to drawings 160A-Z for standard plate positions.

Alpine, a division of ITW Building Components Group Inc. shall not be responsible for any deviation from this drawing, any failure to build the truss in conformance with ANSI/TPI 1, or for handling, shipping, installation & bracing of trusses.

A seal on this drawing or cover page listing this drawing, indicates acceptance of professional engineering responsibility solely for the design shown. The suitability and use of this drawing for any structure is the responsibility of the Building Designer per ANSI/TPI 1 Sec.2.

For more information see this job's general notes page and these web sites:
ALPINE: www.alpineitw.com; TPI: www.tpinst.org; SBCA: www.sbcacomponents.com; ICC: www.iccsafe.org

WILLIAM F. KIRCK LICENSE No. 70861 STATE OF FLORIDA PROFESSIONAL ENGINEER

02/10/2023

COA #0278
Florida Certificate of Product Approval #FL 1999

MAX. TOT. LD. 60 PSF
DUR. FAC. ANY
MAX. SPACING 24.0"

REF	LET-IN VERT
DATE	01/02/2018
DRWG	GBLLETIN0118

Gable Stud Reinforcement Detail for Stucco Cladding

ASCE 7-16: 140 mph Wind Speed, 15' Mean Height, Enclosed, Exposure C, Kzt = 1.00

Or: 120 mph Wind Speed, 15' Mean Height, Partially Enclosed, Exposure C, Kzt = 1.00
Or: 120 mph Wind Speed, 15' Mean Height, Enclosed, Exposure D, Kzt = 1.00
Or: 100 mph Wind Speed, 15' Mean Height, Partially Enclosed, Exposure D, Kzt = 1.00

Max Gable Vertical Length

2x4 Gable Vertical Spacing	Species	Brace Grade	No Braces	(1) 1x4 "L" Brace * Group A	(1) 1x4 "L" Brace * Group B	(1) 2x4 "L" Brace * Group A	(1) 2x4 "L" Brace * Group B	(2) 2x4 "L" Brace ** Group A	(2) 2x4 "L" Brace ** Group B	(1) 2x6 "L" Brace * Group A	(1) 2x6 "L" Brace * Group B	(2) 2x6 "L" Brace ** Group A	(2) 2x6 "L" Brace ** Group B
24" o.c.	SPF HF	#1 / #2	3' 9"	6' 4"	6' 7"	7' 6"	7' 10"	8' 11"	9' 4"	11' 9"	12' 3"	14' 0"	14' 0"
		#3	3' 7"	6' 3"	6' 6"	7' 5"	7' 8"	8' 10"	9' 2"	11' 7"	12' 1"	13' 10"	14' 0"
		Stud	3' 7"	6' 3"	6' 6"	7' 5"	7' 8"	8' 10"	9' 2"	11' 7"	12' 1"	13' 10"	14' 0"
		Standard	3' 7"	5' 8"	6' 0"	7' 5"	7' 8"	8' 10"	9' 2"	11' 7"	12' 1"	13' 10"	14' 0"
	SP DFL	#1	3' 11"	6' 5"	6' 8"	7' 7"	7' 11"	9' 0"	9' 5"	11' 11"	12' 4"	14' 0"	14' 0"
		#2	3' 9"	6' 4"	6' 7"	7' 6"	7' 10"	8' 11"	9' 4"	11' 9"	12' 3"	14' 0"	14' 0"
		#3	3' 8"	6' 0"	6' 4"	7' 5"	7' 9"	8' 11"	9' 3"	11' 8"	12' 2"	13' 11"	14' 0"
		Stud	3' 8"	6' 0"	6' 4"	7' 5"	7' 9"	8' 11"	9' 3"	11' 8"	12' 2"	13' 11"	14' 0"
		Standard	3' 7"	5' 3"	5' 7"	7' 0"	7' 6"	8' 10"	9' 2"	11' 0"	11' 10"	13' 10"	14' 0"
16" o.c.	SPF HF	#1 / #2	4' 3"	7' 3"	7' 7"	8' 7"	8' 11"	10' 3"	10' 8"	13' 6"	14' 0"	14' 0"	14' 0"
		#3	4' 1"	7' 2"	7' 7"	8' 6"	8' 10"	10' 1"	10' 6"	13' 4"	13' 10"	14' 0"	14' 0"
		Stud	4' 1"	7' 2"	7' 5"	8' 6"	8' 10"	10' 1"	10' 6"	13' 4"	13' 10"	14' 0"	14' 0"
		Standard	4' 1"	6' 11"	7' 5"	8' 6"	8' 10"	10' 1"	10' 6"	13' 4"	13' 10"	14' 0"	14' 0"
	SP DFL	#1	4' 6"	7' 4"	7' 8"	8' 8"	9' 0"	10' 4"	10' 9"	13' 8"	14' 0"	14' 0"	14' 0"
		#2	4' 3"	7' 3"	7' 7"	8' 7"	8' 11"	10' 3"	10' 8"	13' 6"	14' 0"	14' 0"	14' 0"
		#3	4' 2"	7' 3"	7' 6"	8' 6"	8' 10"	10' 2"	10' 7"	13' 5"	13' 11"	14' 0"	14' 0"
		Stud	4' 2"	7' 3"	7' 6"	8' 6"	8' 10"	10' 2"	10' 7"	13' 5"	13' 11"	14' 0"	14' 0"
		Standard	4' 1"	6' 5"	6' 10"	8' 6"	8' 10"	10' 1"	10' 6"	13' 4"	13' 10"	14' 0"	14' 0"
12" o.c.	SPF HF	#1 / #2	4' 8"	8' 0"	8' 4"	9' 5"	9' 10"	10' 3"	11' 9"	14' 0"	14' 0"	14' 0"	14' 0"
		#3	4' 6"	7' 11"	8' 2"	9' 4"	9' 8"	11' 1"	11' 7"	14' 0"	14' 0"	14' 0"	14' 0"
		Stud	4' 6"	7' 11"	8' 2"	9' 4"	9' 8"	11' 1"	11' 7"	14' 0"	14' 0"	14' 0"	14' 0"
		Standard	4' 6"	7' 11"	8' 2"	9' 4"	9' 8"	11' 1"	11' 7"	14' 0"	14' 0"	14' 0"	14' 0"
	SP DFL	#1	4' 11"	8' 1"	8' 5"	9' 7"	9' 11"	11' 4"	11' 10"	14' 0"	14' 0"	14' 0"	14' 0"
		#2	4' 8"	8' 0"	8' 4"	9' 5"	9' 10"	11' 3"	11' 9"	14' 0"	14' 0"	14' 0"	14' 0"
		#3	4' 7"	7' 11"	8' 3"	9' 5"	9' 9"	11' 2"	11' 8"	14' 0"	14' 0"	14' 0"	14' 0"
		Stud	4' 7"	7' 11"	8' 3"	9' 5"	9' 9"	11' 2"	11' 8"	14' 0"	14' 0"	14' 0"	14' 0"
		Standard	4' 6"	7' 5"	7' 11"	9' 4"	9' 8"	11' 1"	11' 7"	14' 0"	14' 0"	14' 0"	14' 0"

Bracing Group Species and Grades:

Group A:

Spruce-Pine-Fir

#1 / #2	Standard
#3	Stud

Hem-Fir

#2	Stud
#3	Standard

Douglas Fir-Larch

#3
Stud
Standard

Southern Pine***

#3
Stud
Standard

Group B:

Hem-Fir

#1 & Btr
#1

Douglas Fir-Larch

#1
#2

Southern Pine***

#1
#2

1x4 Braces shall be SRB (Stress-Rated Board).

***For 1x4 So. Pine use only Industrial 55 or Industrial 45 Stress-Rated Boards. Group B values may be used with these grades.

Gable Truss Detail Notes:

Wind Load deflection criterion is L/360.

Provide uplift connections for 55 plf over continuous bearing (5 psf TC Dead Load).

Gable end supports load from 4' 0" outlookers with 2' 0" overhang, or 12" plywood overhang.

Attach "L" braces with 10d (0.128"x3.0" min) nails.

* For (1) "L" brace: space nails at 2" o.c. in 18" end zones and 4" o.c. between zones.

** For (2) "L" braces: space nails at 3" o.c. in 18" end zones and 6" o.c. between zones.

"L" bracing must be a minimum of 80% of web member length.

Gable Vertical Plate Sizes

Vertical Length	No Splice
Less than 4' 0"	1X4 or 2X3
Greater than 4' 0"	3X4

+ Refer to common truss design for peak, splice, and heel plates.

Refer to the Building Designer for conditions not addressed by this detail.

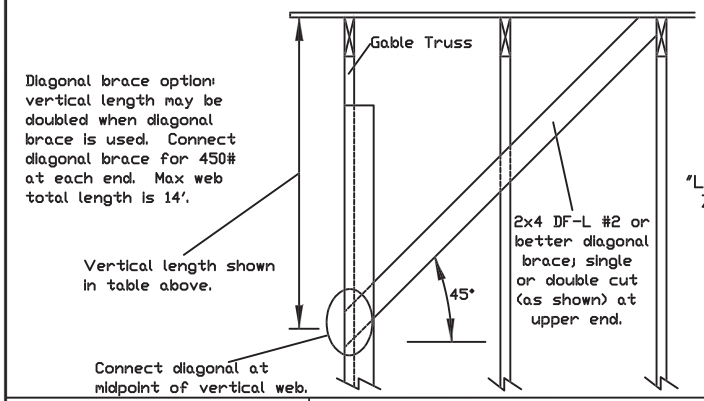

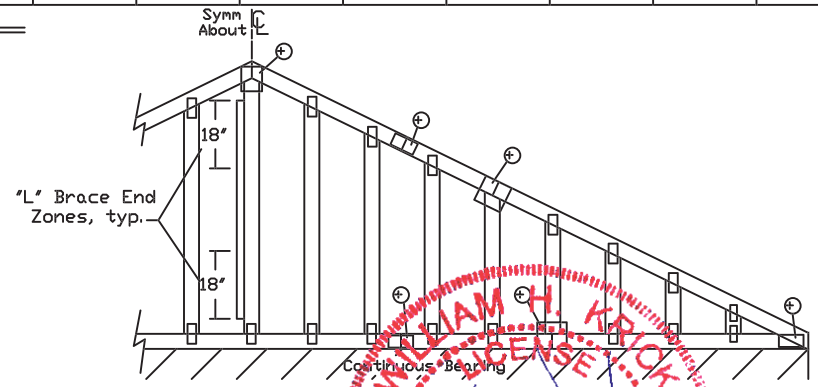

Refer to chart above for max gable vertical length.

WILLIAM H. KRICK LICENSE No. 70861 STATE OF FLORIDA PROFESSIONAL ENGINEER

COA #0,278 02/10/2023
Florida Certificate of Product Approval #FL 1900

WARNING READ AND FOLLOW ALL NOTES ON THIS DRAWING!
IMPORTANT FURNISH THIS DRAWING TO ALL CONTRACTORS INCLUDING THE INSTALLERS!

Trusses require extreme care in fabricating, handling, shipping, installing and bracing. Refer to and follow the latest edition of BCSI (Building Component Safety Information, by TPI and SBCA) for safety practices prior to performing these functions. Installers shall provide temporary bracing per BCSI. Unless noted otherwise, top chord shall have properly attached structural sheathing and bottom chord shall have a properly attached rigid ceiling. Locations shown for permanent lateral restraint of webs shall have bracing installed per BCSI sections B3, B7 or B10, as applicable. Apply plates to each face of truss and position as shown above and on the Joint Details, unless noted otherwise. Refer to drawings 160A-Z for standard plate positions.

Alpine, a division of ITW Building Components Group Inc. shall not be responsible for any deviation from this drawing, any failure to build the truss in conformance with ANSI/TPI 1, or for handling, shipping, installation & bracing of trusses.

A seal on this drawing or cover page listing this drawing, indicates acceptance of professional engineering responsibility solely for the design shown. The suitability and use of this drawing for any structure is the responsibility of the Building Designer per ANSI/TPI 1 Sec.2.

For more information see this job's general notes page and these web sites:
ALPINE: www.alpineitw.com; TPI: www.tpinst.org; SBCA: www.sbcacomponents.com; ICC: www.iccsafe.org

ALPINE AN ITW COMPANY
155 Harlem Ave
North Building, 4th Floor
Glenview, IL 60025

MAX. TOT. LD. 60 PSF

MAX. SPACING 24.0"

REF	ASCE7-16-GAB14015
DATE	01/26/2018
DRWG	S14015ENC160118