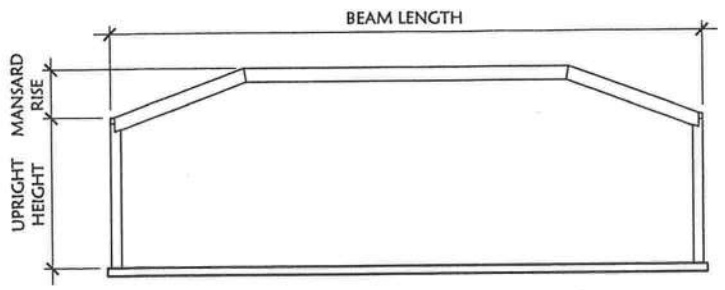

MANSARD BEAM SPAN DEFINITION

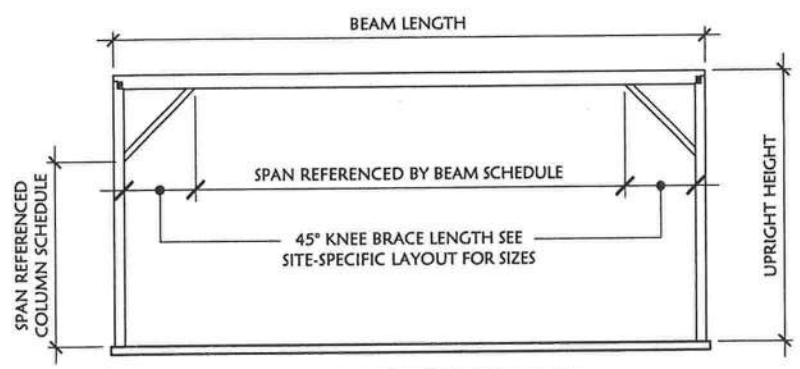

FLAT BEAM SPAN DEFINITION

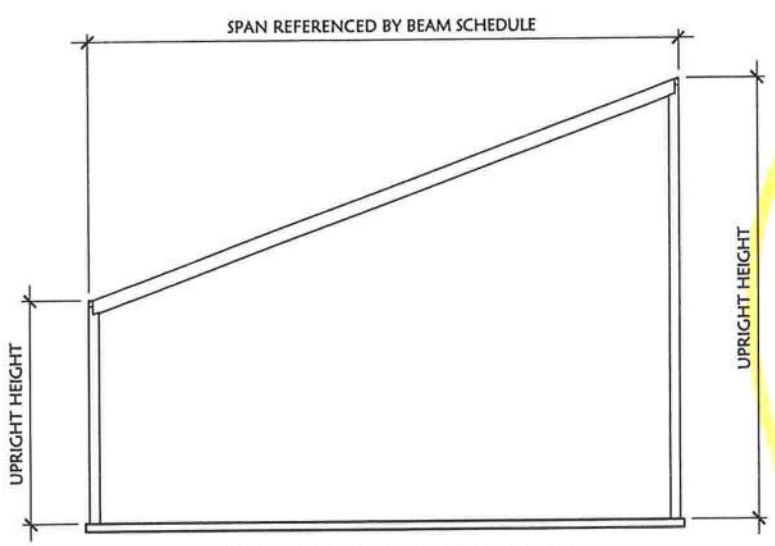

SLOPED BEAM SPAN DEFINITION

1 / S-2.2 BEAM SPAN DEFINITIONS

SCALE: 1/8" = 1'-0"

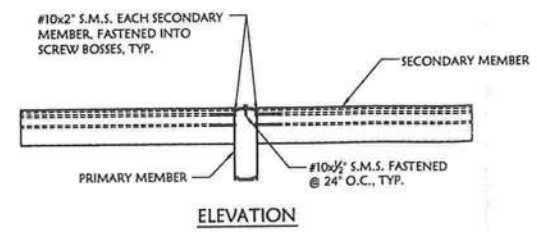

ELEVATION

2 / S-2.2 PRIMARY MEMBER TO SECONDARY MEMBER

SCALE: 1½" = 1'-0"

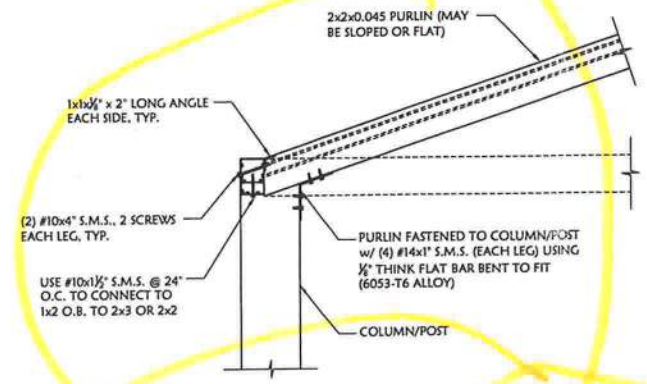

3 / S-2.2 SIDEWALL POST/COLUMN TO PURLIN CONNECTION DETAIL

SCALE: 1½" = 1'-0"

QUANTITY OF SCREWS REQUIRED

BEAM SIZE	# SCREWS
2x4-2x6	12
2x7	16
2x8	18
2x9	20
2x10	22

LENGTH OF SPLICE PLATE

BEAM SIZE	LENGTH
2x4	8 IN.
2x5	10 IN.
2x6	12 IN.
2x7	14 IN.
2x8	16 IN.
2x9	18 IN.
2x10	18 IN.

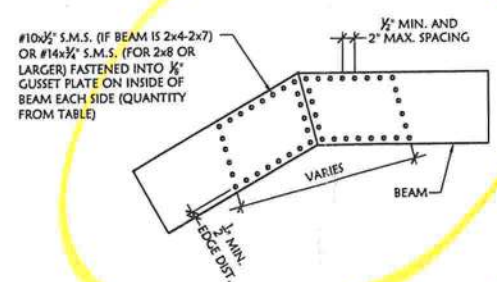

4 / S-2.2 MANSARD SPLICE CONNECTION

SCALE: 1½" = 1'-0"

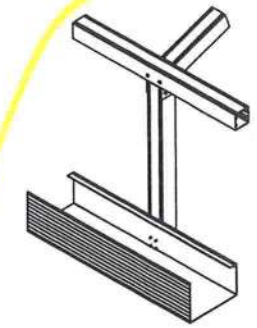

NOTES:

1. THIS CONNECTION IS ONLY GOOD FOR NON-LOAD BEARING TRANSOM WALLS THAT ARE 60" IN HEIGHT OR LESS FROM THE TOP LIP OF THE SUPER GUTTER.
2. THE UPRIGHT IS SHOWN LINING UP WITH A PURLIN IN THIS DETAIL. THIS IS TYPICALLY HOW IT'S INSTALLED, BUT IS NOT REQUIRED. THE UPRIGHTS NEED TO BE SPACED SUCH THAT THE SPAN BETWEEN THEM DOES NOT EXCEED WHAT THE ROOF PERIMETER MEMBER CAN SPAN ACCORDING TO THE "BEAM SCHEDULE" TABLE.
3. THIS TYPE OF CONNECTION IS USED TO BREAK UP THE SPAN OF THE ROOF PERIMETER MEMBER. IF THE ROOF PERIMETER MEMBER IS LARGE ENOUGH TO SUPPORT THE SPAN ON ITS OWN (I.E. A 2X4 SMB SPANNING A 12' DISTANCE) THEN THE UPRIGHT SUPPORTS ARE NOT NECESSARY AND THIS DETAIL IS NOT REQUIRED.

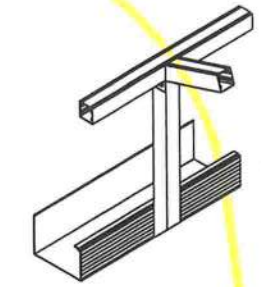

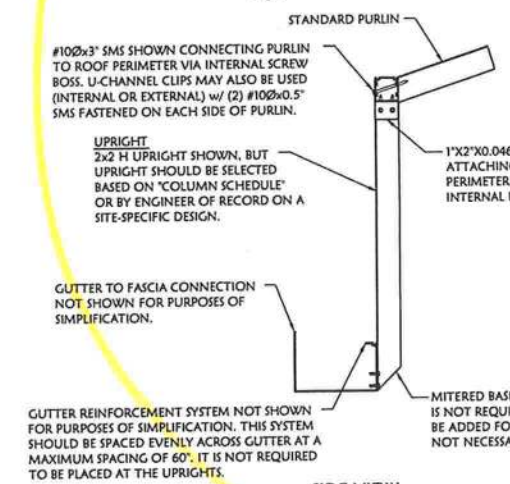

SIDE VIEW

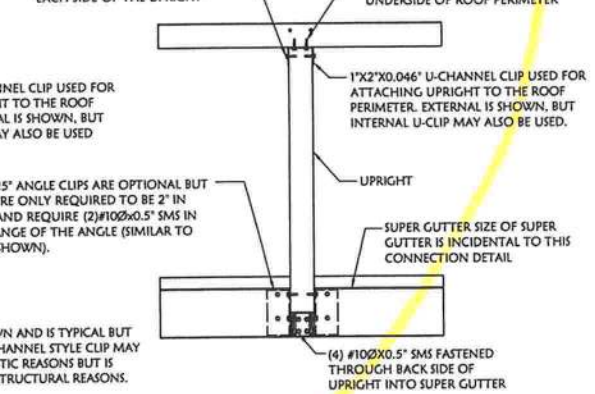

FRONT VIEW
(FROM INSIDE CAGE - WITHOUT PURLIN SHOWN)

5 / S-2.2 NON-LOAD BEARING TRANSOM WALL CONNECTION

SCALE: 1½" = 1'-0"

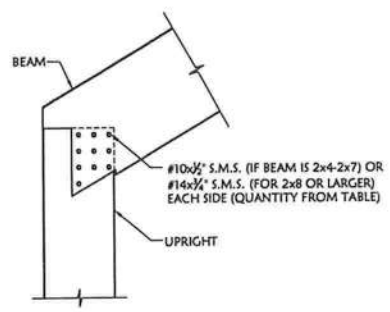

QUANTITY OF #10 FASTENERS REQUIRED

BEAM SIZE \ UPRIGHT SIZE	2x4	2x5	2x6	2x7	2x8	2x9	2x10
2x4	N/A	N/A	N/A	N/A	N/A	N/A	N/A
2x5	3	4	4	4	4	4	4
2x6	5	7	8	9	9	9	9
2x7	7	10	12	14	14	14	14
2x8	9	13	16	18	18	19	20
2x9	11	16	20	22	22	25	27
2x10	13	19	24	27	27	31	34

QUANTITY OF #14 FASTENERS REQUIRED

BEAM SIZE \ UPRIGHT SIZE	2x4	2x5	2x6	2x7	2x8	2x9	2x10
2x4	N/A	N/A	N/A	N/A	N/A	N/A	N/A
2x5	3	3	3	3	3	3	3
2x6	5	6	6	7	6	6	7
2x7	7	9	9	11	10	12	12
2x8	7	10	9	12	11	13	14
2x9	9	13	12	15	15	17	19
2x10	11	16	16	19	19	22	25

6 / S-2.2 MANSARD BEAM TO UPRIGHT CONNECTION

SCALE: 1½" = 1'-0"

ROBERT C. SCROGGINS LICENSE No. 56158 STATE OF FLORIDA PROFESSIONAL ENGINEER

STRUCTURAL CONCEPTS & DESIGN
405 DOUGLAS AVENUE, SUITE 1305 • ALTAMONTE SPRINGS, FL 32714
TEL 407/774-3028 • FAX 407/682-2386
WWW.STRUCTURALCONCEPTSDESIGN.COM
FLORIDA C.O.A. NO. 27191

06/22/11

Robert C. Scroggins, P.E.
FL Registration No. 56158

To the best of the Design Engineer's knowledge, the plans and specifications for this project comply with the applicable minimum building codes as determined by the local authority in accordance with the Florida Statutes.

Structural Framing Sections & Details

Project: Residential Pool Screen Enclosure, Florida

Client: Florida Pool Enclosures, Inc
Scott Lee Vice President
927 HICKORY STREET • ALTAMONTE SPRINGS, FL 32701
TEL 407/260-0870 • FAX 407/260-0481
WWW.FLORIDAPOOLENCLOSURES.COM

REV.	DATE	DESCRIPTION

JOB NO. :	#11-034
DRAWN BY:	TLW
CHECKED BY:	RCS
APPROVED BY:	RCS
DATE:	06/22/11

SHEET S-2.2

F:\Structural Server\Florida Pool Enclosures\2011 Projects\11-034 Typical Pool Screen Enclosures 06/22/11 TLW

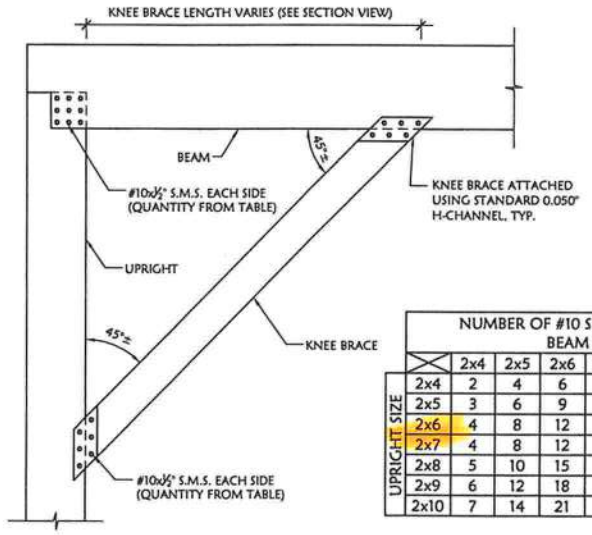

NUMBER OF #10 S.M.S. REQUIRED BEAM SIZE								
UPRIGHT SIZE	2x4	2x5	2x6	2x7	2x8	2x9	2x10
2x4	2	4	6	6	8	10	12
2x5	3	6	9	9	12	15	18
2x6	4	8	12	12	16	20	24
2x7	4	8	12	12	16	20	24
2x8	5	10	15	15	20	25	30
2x9	6	12	18	18	24	30	36
2x10	7	14	21	21	28	35	42

NUMBER OF #14 S.M.S. REQUIRED BEAM SIZE							
UPRIGHT SIZE	2x4	2x5	2x6	2x7	2x8	2x9	2x10
2x4	N/A	2	2	3	4	5	6
2x5	2	2	4	4	6	6	8
2x6	2	4	6	8	10	12	14
2x7	3	4	8	8	10	12	14
2x8	4	6	10	10	12	14	16
2x9	5	6	12	12	14	16	18
2x10	6	8	14	14	16	18	20

1 / S-2.1 BEAM TO COLUMN

SCALE: 1½" = 1'-0"

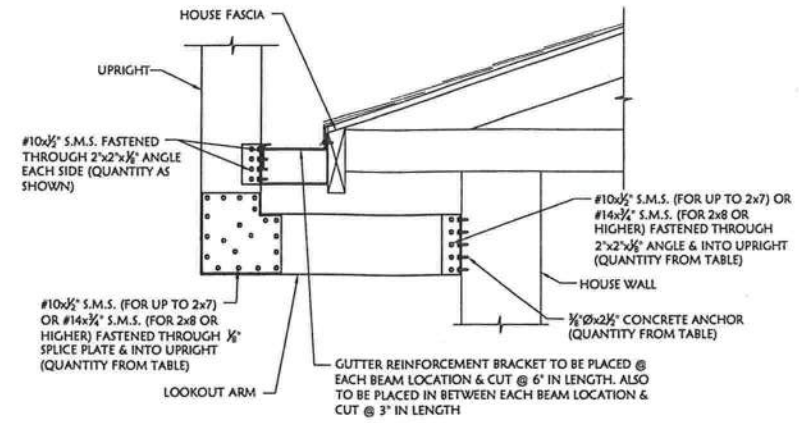

NOTE:
SUPER GUTTER SIZE MAY BE 5" OF 7"

NUMBER OF GUSSET PLATE SCREWS							
UPRIGHT SIZE	2x4	2x5	2x6	2x7	2x8	2x9	2x10
QTY. OF SCREWS	16	18	20	24	26	30	30

NUMBER OF FASTENERS TO ANGLE CLIP							
UPRIGHT SIZE	2x4	2x5	2x6	2x7	2x8	2x9	2x10
QTY. OF SCREWS	3	4	5	6	7	8	9

2 / S-2.1 LOOKOUT ARM CONNECTION DETAIL

SCALE: 1½" = 1'-0"

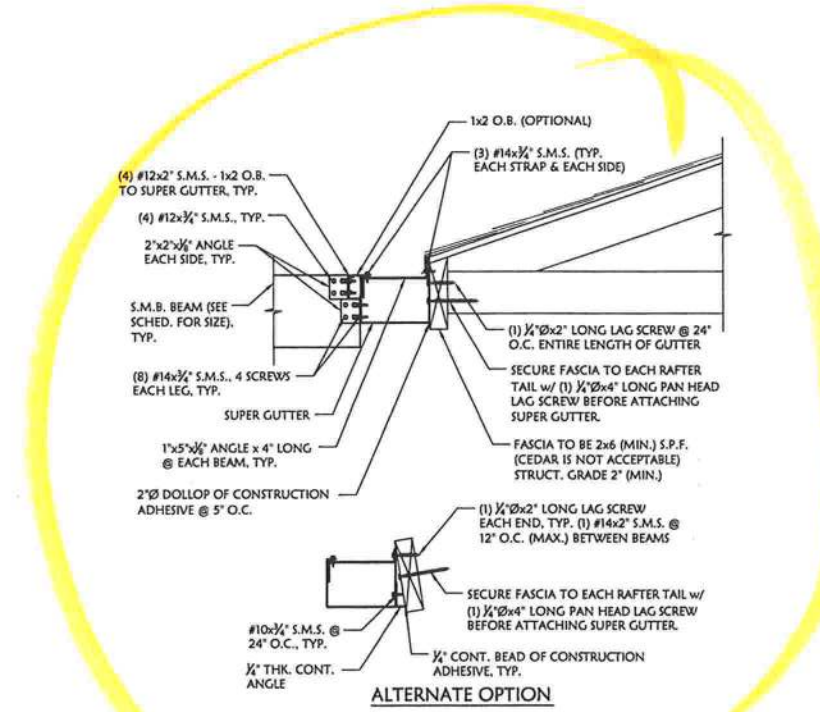

3 / S-2.1 ROOF BEAM TO SUPER GUTTER CONNECTION

SCALE: 1½" = 1'-0"

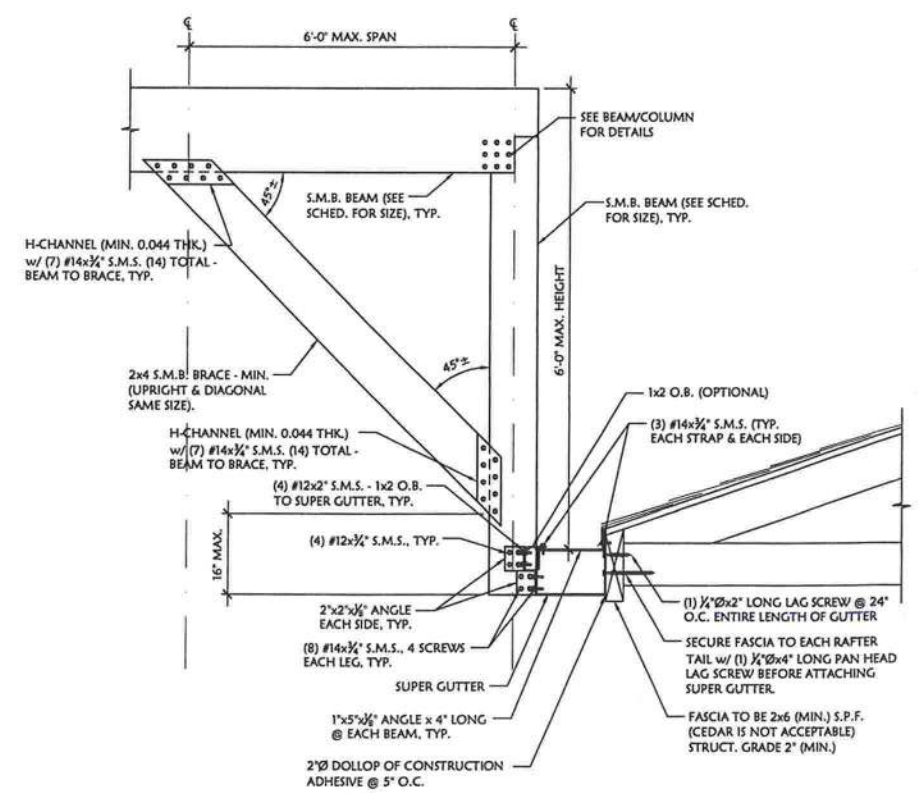

4 / S-2.1 TRANSOM UPRIGHT TO SUPER GUTTER CONNECTION

SCALE: 1½" = 1'-0"

ROBERT C. SCROGGINS LICENSE No. 56158 STATE OF FLORIDA PROFESSIONAL ENGINEER

STRUCTURAL CONCEPTS & DESIGN
405 DOUGLAS AVENUE SUITE 1305 • ALTAMONTE SPRINGS, FL. 32714
TEL 407/774-3028 • FAX 407/682-2386
WWW.STRUCTURALCONCEPTSDESIGN.COM
FLORIDA C.O.A. NO. 27191

06/22/11

Robert C. Scroggins, P.E.
FL Registration No. 56158

To the best of the Design Engineer's knowledge, the plans and specifications for this project comply with the applicable minimum building codes as determined by the local authority in accordance with the Florida Statutes.

Structural Framing Sections & Details

Project:
Residential Pool Screen Enclosure
_____, Florida

Client:
Florida Pool Enclosures, Inc
927 HICKORY STREET • ALTAMONTE SPRINGS, FL. 32701
TEL 407/831-7665 • FAX 407/831-7667
WWW.FLORIDAPOOLENCLOSURES.COM

REV.	DATE	DESCRIPTION

JOB NO. :	#11-034
DRAWN BY:	TLW
CHECKED BY:	RCS
APPROVED BY:	RCS
DATE:	06/22/11

SHEET
S-2.1

F:\Structural Server\Florida Pool Enclosures\2011 Projects\11-034 Typical Pool Screen Enclosures 06/22/11 TLW

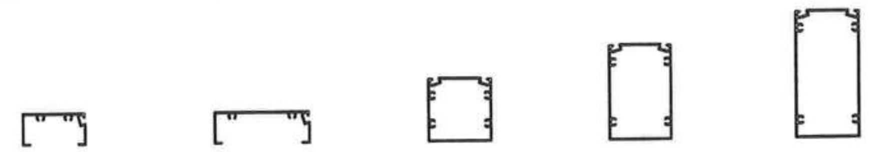

1x2 O.B.
(1x2x0.044 OPEN BACK)
AL 6005-T5

1x3 O.B.
(1x3x0.044 OPEN BACK)
AL 6005-T5

2x2 H.
(2x2x0.044 HOLLOW)
AL 6005-T5

2x3 H.
(2x3x0.044 HOLLOW)
AL 6005-T5

2x4 H.
(2x4x0.044 HOLLOW)
AL 6005-T5

SELF-MATING BEAM
HALF-SHELL (AL 6005-T5)

SELF-MATING BEAM (SMB) NAMING CONVENTION	
MARK	PROPER NAME
2x4 SMB	2x4x0.046x0.100 Self-Mating Beam
2x5 SMB	2x4x0.050x0.116 Self-Mating Beam
2x6 SMB	2x4x0.050x0.120 Self-Mating Beam
2x7 SMB	2x4x0.055x0.120 Self-Mating Beam
2x8 SMB	2x4x0.072x0.224 Self-Mating Beam
2x9 SMB	2x4x0.072x0.224 Self-Mating Beam
2x10 SMB	2x4x0.092x0.389 Self-Mating Beam

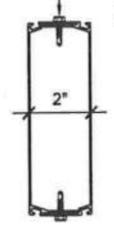

FASTENER STITCHING ALONG TOP & BOTTOM AT 24" O.C. SIZE OF SMS DETERMINED BY DEPTH OF BEAM.
• 2X4 SMB - 2X7 SMB USES #10Ø x 0.75 S.M.S.
• 2X8 SMB - 2X10 SMB USES #14Ø x 0.75 S.M.S.

SELF-MATING BEAM
ATTACHMENT (AL 6005-T5)

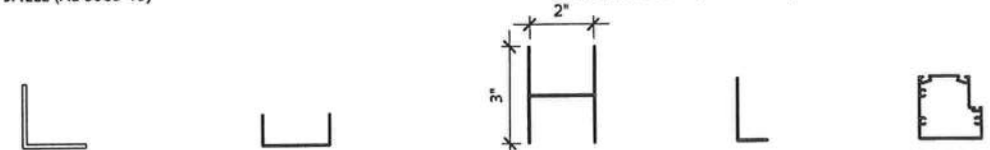

2x2 ANGLE
(2x2x0.125 ANGLE)
AL 6005-T5

U-CHANNEL/RECEIVER CHANNEL
(1x2x0.055 U-CHANNEL)
AL 6005-T5

H-CHANNEL
(2x3x0.062 H-CHANNEL)
AL 6005-T5

1x2 ANGLE
(1x2x0.062 ANGLE)
AL 6005-T5

DOOR JAMB
(2x2x0.046 DOOR JAMB)
AL 6005-T5

1 / S-1.0 SELF-MATING BEAM (SMB) NAMING CONVERTION

SCALE: 3" = 1'-0"

COLUMN SCHEDULE

COLUMN MEMBER TYPE	TRIBUTARY WIDTH	4.0	4.5	5.0	5.5	6.0	6.5	7.0	7.5	8.0
		EFFECTIVE HEIGHT (FT.)								
	2x2 H	6.2	5.8	5.5	5.1	4.8	4.6	4.2	3.9	3.3
	2x3 H	8.1	7.8	7.3	6.9	6.7	6.4	6.1	5.9	5.5
	2x4 H	9.0	8.7	8.2	7.8	7.4	7.0	6.8	6.1	5.8
	2x4 SMB	13.9	13.1	12.4	11.8	11.3	10.9	10.5	10.1	9.8
	2x5 SMB	17.2	16.2	15.3	14.6	14.0	13.5	13.0	12.5	12.1
	2x6 SMB	19.6	18.5	17.6	16.7	16.0	15.4	14.8	14.3	13.9
	2x7 SMB	22.0	20.7	19.7	18.8	18.0	17.3	16.6	16.1	15.5
	2x8 SMB	30.3	28.9	27.4	26.1	25.0	24.0	23.2	22.4	21.7
	2x9 SMB	36.0	34.6	33.2	31.6	30.3	29.1	28.0	27.1	26.2
	2x10 SMB	41.5	39.9	38.5	37.0	35.4	34.0	32.6	31.7	30.7
	2x5 TFB	18.2	17.1	16.3	15.5	14.8	14.2	13.7	13.3	12.8
	2x7 TFB	24.2	22.8	21.6	20.6	19.7	18.9	18.2	17.6	17.1
	2x9 TFB	32.8	30.9	29.3	27.9	26.7	25.7	24.8	23.9	23.2

THIS TABLE APPLIES TO BEARING & NON-BEARING WALLS FOR HORIZONTAL WIND LOADS IN DESIGN. HEIGHTS MAY BE INTERPOLATED BUT NOT EXTRAPOLATED.

PURLIN SCHEDULE (UP TO 130 MPH/EXPOSURE B)

MEMBER	TRIBUTARY WIDTH	4.0	4.5	5.0	5.5	6.0	6.5	7.0	7.5	8.0
		EFFECTIVE SPAN (FT.)								
	2x2x0.044	8.0	8.0	8.0	8.0	8.0	8.0	7.9	7.7	7.5
	2x3x0.050	13.7	13.1	12.8	12.4	12.0	11.7	11.4	11.1	10.8
	2x3x0.060	15.3	14.7	14.3	13.8	13.4	12.9	12.4	11.9	11.4
	2x4x0.050	17.0	17.3	16.8	16.1	15.8	15.1	14.4	13.7	13.0

CARRY BEAM SCHEDULE FOR SCREEN ENCLOSURE ROOFS

COLUMN MEMBER TYPE	TRIBUTARY WIDTH	8.0	12.0	20.0	24.0	30.0	34.0	40.0	44.0	48.0	52.0
		EFFECTIVE SPAN (FT.)									
	2x4 SMB	16.4	14.1	11.7	10.9	9.6	9.1	8.4	8.0	7.7	7.3
	2x5 SMB	20.1	17.4	14.7	13.7	12.3	11.5	10.7	10.2	9.8	9.3
	2x6 SMB	22.4	20.4	17.2	15.8	14.1	13.2	12.2	11.7	11.2	10.7
	2x7 SMB	25.4	23.4	19.5	18.3	16.4	15.3	14.2	13.5	12.9	12.4
	2x8 SMB	31.6	28.7	24.1	22.7	20.9	19.6	18.2	17.3	16.5	15.9
	2x9 SMB	34.3	31.6	26.6	25.0	22.7	21.3	19.7	18.8	18.1	17.3
	2x10 SMB	42.7	39.3	33.0	31.0	28.6	27.5	25.9	24.7	23.6	22.7
	2x5 TFB	24.1	22.2	18.5	17.4	15.6	14.5	13.5	12.8	12.3	11.8
	2x7 TFB	30.0	27.3	22.9	21.6	19.9	18.6	17.3	16.4	15.7	15.1
	2x9 TFB	36.3	33.4	28.1	26.4	24.3	23.4	22.0	21.0	20.1	19.3

SPANS MAY BE INTERPOLATED BUT NOT EXTRAPOLATED.

CHAIR RAIL SCHEDULE

MEMBER	TRIBUTARY WIDTH	4.0	5.0	6.0	7.0	8.0
		EFFECTIVE SPAN (FT.)				
	2x2x0.045	8.5	7.8	7.6	7.1	6.8
	2x3x0.050	11.0	10.4	9.7	9.1	8.7
	2x3x0.060	12.7	11.8	11.1	10.6	10.1
	2x4x0.050	13.6	12.7	11.7	11.2	10.5
	2x5x0.050	15.0	13.4	12.2	11.3	10.6

BEAM SCHEDULE

BEAM MEMBER TYPE	TRIBUTARY WIDTH	4.0	5.0	6.0	7.0	8.0
		EFFECTIVE SPAN (FT.)				
	2x4 SMB	20.4	18.9	17.3	16.0	14.9
	2x5 SMB	27.3	24.4	22.3	20.6	19.3
	2x6 SMB	31.8	28.9	26.4	24.4	22.8
	2x7 SMB	36.2	33.3	30.4	28.1	26.3
	2x8 SMB	47.1	43.7	41.2	39.1	37.3
	2x9 SMB	55.9	51.9	48.8	46.4	44.4
	2x10 SMB	60.0	59.9	56.4	53.5	51.2
	2x5 TFB	28.5	26.0	23.7	22.0	20.5
	2x7 TFB	38.5	35.7	33.4	30.9	28.9
	2x9 TFB	51.1	47.5	44.7	42.4	40.6

NOTES:
1. SPANS MAY BE INTERPOLATED BUT NOT EXTRAPOLATED.
2. FOR ANYTHING SMALL THAN A 2X4 (I.E. A 2X2 OF 2X3) USE THE PURLIN TABLE TO DETERMINE SPANS.

KNEE BRACE SCHEDULE

SIZE	LENGTH	QTY. PER FLANGE
2x2x0.044	UP TO 2'	2
2x3x0.050	2' TO 4'	3
2x4x0.050	4' TO 6'	4
2x4x0.048 x 0.100 SMB	6' TO 7'	4
2x6x0.050 x 0.120 SMB	7' TO 8'	6

NOTES:

1. BEAM MEMBER SIZE IS CHOSEN BY THE SPAN BETWEEN THE KNEE BRACES, TYPICALLY (U.N.O.)
2. IF THERE ARE NO KNEE BRACES THEN THE SPAN IS CHOSEN BY THE DISTANCE OF THE BEAM LENGTH MINUS HALF THE DEPTH OF EACH UPRIGHT. (I.e. - BEAM LENGTH - (HALF DEPTH OF UPRIGHT 1 + HALF DEPTH OF UPRIGHT 2).
3. KNEE BRACE LENGTH SHALL NOT EXCEED WHAT IS GIVEN IN THE KNEE BRACE SCHEDULE (I.e. 8' IN HORIZONTAL OR VERTICAL DISTANCE) UNLESS THE SITE-SPECIFIC LAYOUT HAS BEEN APPROVED AND SEALED BY A LICENSED PROFESSIONAL ENGINEER.
4. UPRIGHT MEMBER SIZE IS CHOSEN BY THE SPAN FROM THE GROUND TO THE BOTTOM OF THE KNEE BRACE
5. CHAIR RAILS THAT ARE ATTACHED TO UPRIGHTS THROUGH THE WEB OF THE UPRIGHT INTO EVERY AVAILABLE SCREW BOSS OF THE CHAIR RAIL, MAY BE USED AS GUARD RAILS IN SCREEN ENCLOSURES PROVIDED THAT THEY ARE SET AT A HEIGHT OF BETWEEN 18" & 48" AND THAT THEY SPAN NO GREATER THAN WHAT THE CHAIR RAIL SCHEDULE' IDENTIFIES FOR EACH RESPECTIVE MEMBER.
6. THE SPAN TABLES SHOWN ARE CALCULATED FOR WIND EXPOSURE B TYPE TERRAIN. IF EXPOSURE C IS NEEDED, THEN USE THE MULTIPLIERS AS FOLLOWS: WITH A HEIGHT RANGE OF:
   - 0'-15': MULTIPLY SPAN BY 0.83 OR FASTEN SELF-MATING BEAMS TOGETHER @ 12" O.C.
   - 15'-20': MULTIPLY SPAN BY 0.78 OR FASTEN SELF-MATING BEAMS TOGETHER @ 12" O.C.
   - 20'-25': MULTIPLY SPAN BY 0.74 OR FASTEN SELF-MATING BEAMS TOGETHER @ 8" O.C.
   - 25'-30': MULTIPLY SPAN BY 0.71 OR FASTEN SELF-MATING BEAMS TOGETHER @ 6" O.C.

General Structural Notes

GENERAL DRAWING NOTES:

- DO NOT SCALE DRAWINGS. USE DIMENSIONS PROVIDED, TYPICALLY. IN THE CASE OF DIMENSIONAL CONFLICT, ARCHITECTURAL DIMENSIONS GOVERN OVER STRUCTURAL DIMENSIONS, TYPICALLY.
- CONTRACTOR SHALL COORDINATE THE STRUCTURAL DOCUMENTS w/ THE ARCHITECTURAL, MECHANICAL, ELECTRICAL, PLUMBING, & CIVIL DOCUMENTS. SC&D SHALL BE NOTIFIED IN WRITING OF ANY DISCREPANCY OR OMISSION.
- THE STRUCTURE IS STABLE ONLY IN IT'S COMPLETED FORM. TEMPORARY SUPPORTS REQUIRED FOR STABILITY DURING ALL INTERMEDIATE STAGES OF CONSTRUCTION SHALL BE DESIGNED, FURNISHED, & INSTALLED BY THE CONTRACTOR, TYPICALLY.

00200 BUILDING CODES:

FLORIDA BUILDING CODE - 2007 EDITION w/ 2009 SUPPLEMENTS

00500 STRUCTURAL DESIGN CRITERIA:

THE STRUCTURE HAS BEEN DESIGNED IN ACCORD WITH THE BUILDING CODE AND/OR MORE RESTRICTIVE REQUIREMENTS FOR LOADS AS GIVEN BELOW UNLESS SPECIFIC AREAS OF THE DRAWING SPECIFICALLY CALL FOR DIFFERENT LOADING CRITERIA.

GRAVITY LOADING IS TO BE UNIFORM (U.N.O.)
- ROOFS - SLOPE 4":12": 20 PSF (REDUCIBLE)

WIND LOADING PER FLORIDA BUILDING CODE
- BASIC WIND SPEED (V) = 130 MPH (3 SECOND GUST)
- EXPOSURE CATEGORY = "B"
- WIND LOAD IMPORTANCE FACTOR (I) = 0.77
- INTERNAL PRESSURE COEFFICIENTS = N/A (OPEN STRUCTURE)
- COMPONENT & CLADDING PRESSURES = ±14 PSF (MAX.)

SCREEN FRAME WALL w/ GUARDRAIL:
- GUARDRAIL: 20 LB/FT IN ANY DIRECTION or 200 LB. CONCENTRATED LOAD (WHICHEVER IS GREATER)

01051 DRAWING DIMENSIONS AND COORDINATION:

DIMENSIONAL INFORMATION, PRICING, ALL DETAILS AND CONSTRUCTION SHALL BE BASED ON THE ENTIRE SET OF CONTRACT DOCUMENTS. COORDINATE THE REQUIREMENTS OF ALL PROFESSIONALS. USE INFORMATION FROM APPROVED SHOP DRAWINGS TO SUPPLEMENT CONTRACT DOCUMENTS WHERE NECESSARY. REPORT ANY DISCREPANCIES TO THE ARCHITECT PRIOR TO PROCEEDING.

01100 SCOPE OF SERVICE:

STRUCTURAL CONCEPTS & DESIGN, LLC AS THE STRUCTURAL ENGINEER OF RECORD HAS DESIGNED AND IS RESPONSIBLE FOR ONLY THE SPECIFIC STRUCTURAL COMPONENTS SHOWN IN THIS SET OF STRUCTURAL CONSTRUCTION DOCUMENTS. IF A SPECIALTY ENGINEER, AS DEFINED BY THE DEPARTMENT OF PROFESSIONAL REGULATION, IS REQUIRED, HIS SERVICES MUST COMPLY WITH THE SCOPE OF SERVICES AS OUTLINED IN THE PROJECT CONSTRUCTION DOCUMENTS.

02000 FOUNDATIONS:

GEOTECHNICAL DATA AND RECOMMENDATIONS HAVE BEEN NOT BEEN PROVIDED AT THE TIME THESE DRAWINGS WERE ISSUED. BASED ON SIMILAR PROJECTS IN THE AREA, THE FOLLOWING FOUNDATION SYSTEM WILL BE USED:

SHALLOW STRIP AND SPREAD FOOTINGS w/ ALLOWABLE BEARING = 2,000 PSF*
(* TO BE VERIFIED BY GEOTECHNICAL ENGINEER PRIOR TO CONSTRUCTION)

02200 EARTHWORK:

CONTRACTOR SHALL DEWATER SITE AS NECESSARY, SO THAT ALL CONCRETE CAN BE PLACED IN THE DRY. ALL BACKFILL SHALL BE ACCOMPLISHED USING MATERIAL CONSISTING OF CRUSHED STONE AND/OR MATERIAL APPROVED BY THE GEOTECHNICAL ENGINEER. THE BACKFILL SHALL BE COMPACTED TO 95% OF MAXIMUM DENSITY AS DETERMINED BY ASTM D-1557. NO BACKFILL MATERIAL SHALL BE PLACED AGAINST WALLS WHICH DO NOT HAVE PERMANENT FLOORS AT THE TOP AND BOTTOM WITHOUT PROVISIONS FOR ADEQUATE TEMPORARY BRACING OF THOSE WALLS. PROVIDE ADEQUATE EXCAVATION BRACING IN ACCORD WITH GEOTECHNICAL ENGINEER RECOMMENDATIONS TO MAINTAIN EXISTING FOOTINGS, UTILITIES, AND OTHER IMPROVEMENTS IN A SAFE CONDITION.

03100 FORMWORK:

CONTRACTOR SHALL DESIGN AND ERECT FORMWORK IN STRICT COMPLIANCE WITH ACI 347. SEE TYPICAL DETAILS FOR CAMBER REQUIREMENTS. CONTRACTOR SHALL COORDINATE ALL OPENINGS AS REQUIRED FOR OTHER TRADES. OPENINGS WHERE SHOWN ON THE STRUCTURAL DRAWINGS ARE TO IDENTIFY DESIGN INTENT ONLY. THE SPECIFIC DIMENSIONS AND LOCATIONS SHALL BE FURNISHED OR CONFIRMED BY THE TRADE REQUIRING THE OPENING. PROVIDE CHAMFERS AT ALL CORNERS IN CONCRETE MEMBERS EXPOSED TO VIEW. FORMWORK TO REMAIN IN PLACE UNTIL CONCRETE HAS ATTAINED ENOUGH STRENGTH TO SUPPORT ALL DEAD LOADS PLUS A MINIMUM OF 50 PSF OF ADDITIONAL CONSTRUCTION LOAD. SEE SPECIFICATIONS FOR ADDITIONAL REQUIREMENTS.

03200 CONCRETE REINFORCEMENT:

WORK SHALL BE IN ACCORD WITH ACI 318-02, ACI 318R-02, ACI 315-99, ACI 318-02, CRSI "MANUAL OF STANDARD PRACTICE" 2001, CRSI "PLACING REINFORCING BARS" 1997, WIRE REINFORCEMENT INSTITUTE "MANUAL OF STANDARD PRACTICE-STRUCTURAL WELDED WIRE REINFORCEMENT", 2001. BARS SHALL CONFORM TO ASTM SPECIFICATION A615(51). GRADE 60. WELDED WIRE FABRIC SHALL CONFORM TO ASTM A185. CONCRETE COVER REQUIRED AS FOLLOWS:

A. CAST AGAINST AND EXPOSED TO EARTH: 3"
B. FORMED, EXPOSED TO EARTH OR WEATHER: 2" (#6 & LARGER)
1½" (#5 & SMALLER)

C. SLABS AND WALLS:
NO EARTH OR WEATHER EXPOSURE ¾" (#11 & SMALLER)
3 HOUR FIRE RATING AND LESS ¾"

LAP SPLICE LENGTHS SHALL BE AS FOLLOWS:
1. ALL LAP SPLICES SHALL BE TENSION CLASS "B" UNLESS OTHER LAP CONDITIONS ARE SPECIFICALLY SHOWN ON THE DRAWINGS.
2. SPLICE LENGTHS SHALL BE SHOWN ON SHOP DRAWINGS.
3. USE GENERAL HOOK BAR DEVELOPMENT LENGTHS UNLESS SPECIAL CONFINEMENT CONDITIONS ARE SATISFIED IN ACCORD WITH ACI 318.

03300 CAST-IN-PLACE CONCRETE:

TO BE MIXED AND PLACED IN ACCORDANCE WITH ACI 301-99. ALL REINFORCED CONCRETE TO HAVE 28 DAY COMPRESSIVE STRENGTHS AS FOLLOWS. (ALL STRUCTURAL ELEMENTS SHALL BE F'c = 4,000 PSI UNLESS NOTED OTHERWISE).
- FOUNDATIONS: F'c = 3,000 PSI

03600 GROUT:

GROUTING IS CLASSIFIED AS "PRECISION GROUTING" FOR SUPPORT OF OPERATING MACHINE BASES, EQUIPMENT SUBJECT TO THERMAL MOVEMENT, AND BASE PLATES, BEARING PLATES, AND EXPANSION BEARINGS EXCEEDING 8" IN LEAST DIMENSION. ALL OTHER GROUTING MAY BE "ORDINARY GROUTING". METALLIC AGGREGATE GROUT MAY BE USED ONLY IN INTERIOR APPLICATIONS NOT EXPOSED TO VIEW IN FINISHED BUILDING AREAS. USE ORDINARY CEMENT GROUT ONLY WHERE SPECIFICALLY NOTED AS "CEMENT GROUT" ON DETAILS. USE NON-SHRINK GROUT FOR ALL OTHER LOCATIONS. PRECISION GROUT SHALL CONFORM TO CRD-C621-80 WHEN MIXED TO FLUID CONSISTENCY OF 22 TO 25 SECONDS (FLOW CONE METHOD, CRD-C611-80). REQUIRED 28 DAY STRENGTHS SHALL BE AS FOLLOWS:

- CEMENT GROUT: 1,800 PSI
- NON-SHRINK GROUT: 5,000 PSI
- PRECISION GROUT: 6,500 PSI

04220 CONCRETE UNIT MASONRY:

ALL MASONRY CONSTRUCTION TO BE IN ACCORDANCE WITH "SPECIFICATION FOR CONCRETE MASONRY CONSTRUCTION", ACI 530.1-02 AND ALL APPLICABLE LOCAL BUILDING CODE PROVISIONS. ALL MASONRY WALLS TO BE CONSTRUCTED ENTIRELY OF UNITS CONFORMING TO ASTM C 90, AND REINFORCED WITH #9 GAUGE LADDER TYPE HORIZONTAL MASONRY REINFORCING LOCATED AT 16" O.C. ALL MASONRY TO BE LAID IN TYPE "S" MORTAR (1,800 PSI ON THE JOB) WITH FULL HEAD AND BED JOINTS. ALL MASONRY CONSTRUCTION TO BE EITHER BOUND BY TIE BEAM, TIE COLUMN MEMBERS OR TIED TO FRAME WITH 16 GAUGE CONTINUOUS DOVETAIL SLOT AND 12 GAUGE DOVETAIL ANCHOR SPACED @ 16" O.C. (TOP AND TWO VERTICAL SIDES).

04230 REINFORCED UNIT MASONRY:

ALL REINFORCED MASONRY CONSTRUCTION SHALL BE IN ACCORD WITH APPLICABLE PROVISIONS OF CONCRETE REINFORCEMENT, CAST-IN-PLACE CONCRETE, AND CONCRETE MASONRY. VERTICAL REINFORCING SHALL ANCHOR INTO SUPPORTING CONCRETE MEMBERS A CLASS "B" LAP LENGTH PLUS 3" OR FULL DEPTH PLUS A STANDARD HOOK. LAPS WITHIN REINFORCED MASONRY SHALL BE 48 BAR DIAMETERS. CONTRACTOR SHALL COORDINATE PLACING OF DOWELS TO ACCOMMODATE MODULE OF MASONRY UNITS. ALL VERTICAL CELLS AND BEAMS WITH REINFORCING SHALL BE FILLED WITH COARSE GROUT CONSISTING OF 3,000 PSI CONCRETE WITH #8 COARSE AGGREGATE. USE HIGH-SLUMP (SUPERPLASTICIZED) WHERE HEIGHT OF LIFT EXCEEDS 5'-0". USE HIGH-LIFT GROUTING TECHNIQUE WHICH REQUIRES A CLEAN-OUT OPENING AT THE BOTTOM OF ALL CELLS. ALL WALLS TO BE REINFORCED WITH #5 BARS SPACED AT 48" O.C. MAX. VERTICAL TYP. (U.N.O.)

COLUMBIA COUNTY BUILDING DEPARTMENT
Received for FILE COPY Code Compliance
PLANS EXAMINER

STRUCTURAL CONCEPTS & DESIGN
405 DOUGLAS AVENUE, SUITE 1355, ALTAMONTE SPRINGS, FL 32714
ROBERT C. SCROGGINS LICENSE STATE OF FLORIDA PROFESSIONAL ENGINEER
06/22/11
Robert C. Scroggins, P.E.
FL Registration No. 56158

To the best of the Design Engineer's knowledge, the plans and specifications for this project comply with the applicable minimum building codes as determined by the local authority in accordance with the Florida Statutes.

Structural Notes &
Connection Detail

Project:
Residential Pool Screen Enclosure
_______________, Florida

Client:
Florida Pool Enclosures, Inc
927 HICKORY STREET • ALTAMONTE SPRINGS, FL 32701
TEL 407/260-2800 • FAX 407/260-6411
WWW.FLORIDAPOOLENCLOSURES.COM

REV.	DATE	DESCRIPTION

JOB NO.:	#11-034
DRAWN BY:	TLW
CHECKED BY:	RCS
APPROVED BY:	RCS
DATE:	06/22/11
SHEET	S-1.0

3x3x0.060 COLUMN SCHEDULE FOR SOLID ROOF/SCREEN ENCLOSURE COMBO

SCREEN ROOF TRIBUTARY WIDTH (FT.) \ COL. TRIBUTARY WIDTH SPACING (FT.)	8	10	12	14	16	18	20	22	24	26
	MAXIMUM HEIGHT (FT.)									
8	20.0	19.8	19.6	19.4	19.2	19.0	18.8	18.6	18.4	18.2
10	19.6	19.4	19.2	19.0	18.8	18.6	18.4	18.2	18.0	17.8
12	19.2	19.0	18.8	18.6	18.4	18.2	18.0	17.8	17.6	17.4
14	18.8	18.6	18.4	18.2	18.0	17.8	17.6	17.4	17.2	17.0
16	18.4	18.2	18.0	17.8	17.6	17.4	17.2	17.0	16.8	16.6
18	17.9	17.7	17.5	17.3	17.1	16.9	16.7	16.5	16.3	16.1
20	17.5	17.3	17.1	16.9	16.7	16.5	16.3	16.1	15.9	15.7
22	17.1	16.9	16.7	16.5	16.3	16.1	15.9	15.7	15.5	15.3
24	16.7	16.5	16.3	16.1	15.9	15.7	15.5	15.3	15.1	14.9
26	16.3	16.1	15.9	15.7	15.5	15.3	15.1	14.9	14.7	14.5

COMPOSITE ROOF SPAN OF 6'-0"

HEIGHTS MAY BE INTERPOLATED, BUT NOT EXTRAPOLATED

3x3x0.060 COLUMN SCHEDULE FOR SOLID ROOF/SCREEN ENCLOSURE COMBO

SCREEN ROOF TRIBUTARY WIDTH (FT.) \ COL. TRIBUTARY WIDTH SPACING (FT.)	8	10	12	14	16	18	20	22	24	26
	MAXIMUM HEIGHT (FT.)									
8	17.8	17.6	17.4	17.2	17.0	16.8	16.6	16.4	16.2	16.0
10	16.8	16.6	16.4	16.2	16.0	15.8	15.6	15.4	15.2	15.0
12	15.9	15.7	15.5	15.3	15.1	14.9	14.7	14.5	14.3	14.1
14	14.9	14.7	14.5	14.3	14.1	13.9	13.7	13.5	13.3	13.1
16	14.0	13.8	13.6	13.4	13.2	13.0	12.8	12.6	12.4	12.2
18	13.0	12.8	12.6	12.4	12.2	12.0	11.8	11.6	11.4	11.2
20	12.0	11.8	11.6	11.4	11.2	11.0	10.8	10.6	10.4	10.2
22	11.1	10.9	10.7	10.5	10.3	10.1	9.9	9.7	9.5	9.3
24	10.1	9.9	9.7	9.5	9.3	9.1	8.9	8.7	8.5	8.3
26	9.1	8.9	8.7	8.5	8.3	8.1	7.9	7.7	7.5	7.3

COMPOSITE ROOF SPAN OF 14'-0"

HEIGHTS MAY BE INTERPOLATED, BUT NOT EXTRAPOLATED

3x3x0.092 COLUMN SCHEDULE FOR SOLID ROOF/SCREEN ENCLOSURE COMBO

SCREEN ROOF TRIBUTARY WIDTH (FT.) \ COL. TRIBUTARY WIDTH SPACING (FT.)	8	10	12	14	16	18	20	22	24	26
	MAXIMUM HEIGHT (FT.)									
8	20.9	20.7	20.6	20.5	20.3	20.2	20.1	19.9	19.8	19.7
10	20.6	20.5	20.3	20.2	20.1	19.9	19.8	19.7	19.5	19.4
12	20.3	20.2	20.0	19.9	19.8	19.7	19.5	19.4	19.3	19.1
14	20.0	19.9	19.8	19.6	19.5	19.4	19.2	19.1	19.0	18.9
16	19.8	19.6	19.5	19.4	19.2	19.1	19.0	18.8	18.7	18.6
18	19.5	19.4	19.2	19.1	19.0	18.8	18.7	18.6	18.4	18.3
20	19.2	19.1	19.0	18.8	18.7	18.6	18.4	18.3	18.2	18.0
22	19.0	18.8	18.7	18.6	18.4	18.3	18.2	18.0	17.9	17.8
24	18.7	18.5	18.4	18.3	18.2	18.0	17.9	17.8	17.6	17.5
26	18.4	18.3	18.1	18.0	17.9	17.8	17.7	17.6	17.4	17.2

COMPOSITE ROOF SPAN OF 6'-0"

HEIGHTS MAY BE INTERPOLATED, BUT NOT EXTRAPOLATED

3x3x0.092 COLUMN SCHEDULE FOR SOLID ROOF/SCREEN ENCLOSURE COMBO

SCREEN ROOF TRIBUTARY WIDTH (FT.) \ COL. TRIBUTARY WIDTH SPACING (FT.)	8	10	12	14	16	18	20	22	24	26
	MAXIMUM HEIGHT (FT.)									
8	19.4	19.3	19.1	19.0	18.9	18.7	18.6	18.5	18.4	18.2
10	18.8	18.6	18.5	18.4	18.2	18.1	18.0	17.8	17.7	17.6
12	18.1	18.0	17.9	17.7	17.6	17.5	17.3	17.2	17.1	17.0
14	17.5	17.4	17.2	17.1	17.0	16.8	16.7	16.6	16.5	16.3
16	16.9	16.7	16.6	16.5	16.3	16.2	16.1	15.9	15.8	15.7
18	16.2	16.1	16.0	15.8	15.7	15.6	15.4	15.3	15.2	15.1
20	15.6	15.5	15.3	15.2	15.1	14.9	14.8	14.7	14.5	14.4
22	15.0	14.8	14.7	14.6	14.4	14.3	14.2	14.0	13.9	13.8
24	14.3	14.2	14.1	13.9	13.8	13.7	13.5	13.4	13.3	13.1
26	13.7	13.6	13.4	13.3	13.2	13.0	12.9	12.8	12.6	12.5

COMPOSITE ROOF SPAN OF 14'-0"

HEIGHTS MAY BE INTERPOLATED, BUT NOT EXTRAPOLATED

3x3x0.125 COLUMN SCHEDULE FOR SOLID ROOF/SCREEN ENCLOSURE COMBO

SCREEN ROOF TRIBUTARY WIDTH (FT.) \ COL. TRIBUTARY WIDTH SPACING (FT.)	8	10	12	14	16	18	20	22	24	26
	MAXIMUM HEIGHT (FT.)									
8	20.7	20.6	20.5	20.4	20.3	20.2	20.1	20.0	19.9	19.8
10	20.4	20.3	20.2	20.1	20.0	19.9	19.8	19.7	19.6	19.5
12	20.0	19.9	19.8	19.7	19.6	19.5	19.4	19.3	19.2	19.1
14	19.7	19.6	19.5	19.4	19.3	19.2	19.1	19.0	18.9	18.8
16	19.4	19.3	19.2	19.1	19.0	18.9	18.8	18.7	18.6	18.5
18	19.0	18.9	18.8	18.7	18.6	18.5	18.4	18.3	18.2	18.1
20	18.7	18.6	18.5	18.4	18.3	18.2	18.1	18.0	17.9	17.8
22	18.3	18.2	18.1	18.0	17.9	17.8	17.7	17.6	17.5	17.4
24	18.0	17.9	17.8	17.7	17.6	17.5	17.4	17.3	17.2	17.1
26	17.7	17.6	17.5	17.4	17.3	17.2	17.1	17.0	16.9	16.8

COMPOSITE ROOF SPAN OF 10'-0"

HEIGHTS MAY BE INTERPOLATED, BUT NOT EXTRAPOLATED

3x3x0.060 COLUMN SCHEDULE FOR SOLID ROOF/SCREEN ENCLOSURE COMBO

SCREEN ROOF TRIBUTARY WIDTH (FT.) \ COL. TRIBUTARY WIDTH SPACING (FT.)	8	10	12	14	16	18	20	22	24	26
	MAXIMUM HEIGHT (FT.)									
8	18.9	18.7	18.5	18.3	18.1	17.9	17.7	17.5	17.3	17.1
10	18.2	18.0	17.8	17.6	17.4	17.2	17.0	16.8	16.6	16.4
12	17.5	17.3	17.1	16.9	16.7	16.5	16.3	16.1	15.9	15.7
14	16.8	16.6	16.4	16.2	16.0	15.8	15.6	15.4	15.2	15.0
16	16.2	16.0	15.8	15.6	15.4	15.2	15.0	14.8	14.6	14.4
18	15.5	15.3	15.1	14.9	14.7	14.5	14.3	14.1	13.9	13.7
20	14.8	14.6	14.4	14.2	14.0	13.8	13.6	13.4	13.2	13.0
22	14.1	13.9	13.7	13.5	13.3	13.1	12.9	12.7	12.5	12.3
24	13.4	13.2	13.0	12.8	12.6	12.4	12.2	12.0	11.8	11.6
26	12.7	12.5	12.3	12.1	11.9	11.7	11.5	11.3	11.1	10.9

COMPOSITE ROOF SPAN OF 10'-0"

HEIGHTS MAY BE INTERPOLATED, BUT NOT EXTRAPOLATED

3x3x0.060 COLUMN SCHEDULE FOR SOLID ROOF/SCREEN ENCLOSURE COMBO

SCREEN ROOF TRIBUTARY WIDTH (FT.) \ COL. TRIBUTARY WIDTH SPACING (FT.)	8	10	12	14	16	18	20	22	24	26
	MAXIMUM HEIGHT (FT.)									
8	17.6	17.4	17.2	17.0	16.8	16.6	16.4	16.2	16.0	
10	16.6	16.4	16.2	16.0	15.8	15.6	15.4	15.2	15.0	
12	15.7	15.5	15.3	15.1	14.9	14.7	14.5	14.3	14.1	
14	14.7	14.5	14.3	14.1	13.9	13.7	13.5	13.3	13.1	
16	13.8	13.6	13.4	13.2	13.0	12.8	12.6	12.4	12.2	
18	12.8	12.6	12.4	12.2	12.0	11.8	11.6	11.4	11.2	
20	11.8	11.6	11.4	11.2	11.0	10.8	10.6	10.4	10.2	
22	10.9	10.7	10.5	10.3	10.1	9.9	9.7	9.5	9.3	
24	9.9	9.7	9.5	9.3	9.1	8.9	8.7	8.5	8.3	
26	8.9	8.7	8.5	8.3	8.1	7.9	7.7	7.5	7.3	

COMPOSITE ROOF SPAN OF 14'-0"

HEIGHTS MAY BE INTERPOLATED, BUT NOT EXTRAPOLATED

3x3x0.092 COLUMN SCHEDULE FOR SOLID ROOF/SCREEN ENCLOSURE COMBO

SCREEN ROOF TRIBUTARY WIDTH (FT.) \ COL. TRIBUTARY WIDTH SPACING (FT.)	8	10	12	14	16	18	20	22	24	26
	MAXIMUM HEIGHT (FT.)									
8	19.9	19.7	19.6	19.5	19.3	19.2	19.1	18.9		
10	19.4	19.3	19.2	19.1	19.0	18.8	18.7	18.5		
12	18.8	18.7	18.6	18.4	18.3	18.2	18.0			
14	18.2	18.1	17.9	17.8	17.7	17.5	17.4	17.3	17.1	
16	17.6	17.5	17.3	17.2	17.1	16.9	16.8	16.7		
18	17.0	16.8	16.7	16.6	16.4	16.3	16.2	16.0		
20	16.4	16.3	16.1	16.0	15.8	15.7	15.6	15.5	15.3	
22	15.9	15.8	15.7	15.5	15.4	15.3	15.1	15.0	14.9	

COMPOSITE ROOF SPAN OF 10'-0"

HEIGHTS MAY BE INTERPOLATED, BUT NOT EXTRAPOLATED

4x4x0.125 COLUMN SCHEDULE FOR SOLID ROOF/SCREEN ENCLOSURE COMBO

SCREEN ROOF TRIBUTARY WIDTH (FT.) \ COL. TRIBUTARY WIDTH SPACING (FT.)	8	10	12	14	16	18	20	22	24	26
	MAXIMUM HEIGHT (FT.)									
8	21.2	21.1	21.0	20.9	20.9	20.8	20.7	20.7	20.6	20.5
10	20.9	20.8	20.8	20.7	2.06	20.5	20.5	20.4	20.3	20.3
12	20.7	20.6	20.5	20.4	20.4	20.3	20.2	20.1	20.1	20.0
14	20.4	20.3	20.3	20.2	20.1	20.0	20.0	19.9	19.8	19.7
16	20.2	20.1	20.0	19.9	19.9	19.8	19.7	19.6	19.6	19.5
18	19.9	19.8	19.8	19.7	19.6	19.5	19.5	19.4	19.3	19.2
20	19.7	19.6	19.5	19.4	19.4	19.3	19.2	19.1	19.1	19.0
22	19.4	19.3	19.3	19.2	19.1	19.0	19.0	18.9	18.8	18.7
24	19.1	19.1	19.0	18.9	18.9	18.8	18.7	18.6	18.6	18.5
26	18.9	18.8	18.8	18.7	18.6	18.5	18.5	18.4	18.3	18.2

COMPOSITE ROOF SPAN OF 10'-0"

HEIGHTS MAY BE INTERPOLATED, BUT NOT EXTRAPOLATED

CARRY BEAM SCHEDULE FOR SOLID ROOF/SCREEN ENCLOSURE COMBO

MEMBER TYPE \ SCREEN ROOF TRIBUTARY WIDTH (FT.)	8	10	12	14	16	18	20	22	24	26
	EFFECTIVE SPAN (FT.)									
2x4 SMB	10.1	9.4	8.8	8.4	8.0	7.7	7.3	6.8	6.2	5.9
2x5 SMB	12.5	11.6	11.0	10.4	9.9	9.5	9.0	8.2	7.7	7.1
2x6 SMB	17.4	16.7	16.4	15.9	15.5	15.1	14.9	14.5	13.8	12.9
2x7 SMB	19.3	18.6	17.9	17.4	17.2	16.7	16.4	15.9	15.5	14.8
2x8 SMB	23.6	23.1	22.5	21.9	21.2	20.9	20.5	20.1	19.4	18.9
2x9 SMB	25.0	24.3	24.0	23.5	22.8	22.0	21.6	21.1	20.5	19.7
2x10 SMB	31.9	31.0	30.3	29.7	29.3	28.7	27.9	27.2	26.4	25.9
2x5 TFB	18.3	17.5	17.1	16.6	16.2	15.8	15.4	14.8	14.5	13.8
2x7 TFB	21.7	21.0	20.5	20.0	19.4	19.1	18.5	18.0	17.5	17.0
2x9 TFB	27.7	26.8	26.1	25.5	25.1	24.6	24.0	23.4	22.7	22.4

COMPOSITE ROOF SPAN OF 6'-0"

CARRY BEAM SCHEDULE FOR SOLID ROOF/SCREEN ENCLOSURE COMBO

MEMBER TYPE \ SCREEN ROOF TRIBUTARY WIDTH (FT.)	8	10	12	14	16	18	20	22	24	26
	EFFECTIVE SPAN (FT.)									
2x4 SMB	8.9	8.3	7.8	7.4	7.1	6.8	6.5	6.0	5.5	5.5
2x5 SMB	11.1	10.3	9.7	9.2	8.8	8.4	8.0	7.3	6.8	6.3
2x6 SMB	15.4	14.8	14.5	14.1	13.7	13.4	13.2	12.8	12.2	11.4
2x7 SMB	17.1	16.5	15.8	15.4	15.2	14.8	14.5	14.1	13.7	13.1
2x8 SMB	20.9	20.4	19.9	19.4	18.8	18.5	18.1	17.8	17.2	16.7
2x9 SMB	22.1	21.5	21.2	20.8	20.2	19.5	19.1	18.7	18.1	17.4
2x10 SMB	28.2	27.4	26.8	26.3	25.9	25.4	24.7	24.1	23.4	22.9
2x5 TFB	16.2	15.5	15.1	14.7	14.3	14.0	13.6	13.1	12.8	12.2
2x7 TFB	19.2	18.6	18.1	17.7	17.2	16.9	16.4	15.9	15.5	15.0
2x9 TFB	24.5	23.7	23.1	22.6	22.2	21.8	21.2	20.7	20.1	19.8

COMPOSITE ROOF SPAN OF 10'-0"

CARRY BEAM SCHEDULE FOR SOLID ROOF/SCREEN ENCLOSURE COMBO

MEMBER TYPE \ SCREEN ROOF TRIBUTARY WIDTH (FT.)	8	10	12	14	16	18	20	22	24	26
	EFFECTIVE SPAN (FT.)									
2x4 SMB	7.9	7.4	6.9	6.6	6.3	6.1	5.8	5.3	4.9	4.6
2x5 SMB	9.9	9.2	8.6	8.2	7.8	7.5	7.1	8.5	6.1	5.8
2x6 SMB	13.7	13.2	12.9	12.5	12.2	11.9	11.7	11.4	10.9	10.1
2x7 SMB	15.2	14.7	14.1	13.7	13.5	13.2	12.9	12.5	12.2	11.7
2x8 SMB	18.6	18.2	17.7	17.3	16.7	16.5	16.1	15.8	15.3	14.9
2x9 SMB	19.7	19.1	18.9	18.5	18.0	17.4	17.0	16.6	16.1	15.5
2x10 SMB	25.1	24.4	23.9	23.4	23.1	22.6	22.0	21.4	20.8	20.4
2x5 TFB	14.4	13.8	13.4	13.1	12.7	12.5	12.1	11.7	11.4	10.9
2x7 TFB	17.1	16.6	16.1	15.8	15.3	15.0	14.6	14.2	13.8	13.4
2x9 TFB	21.8	21.1	20.6	20.1	19.8	19.4	18.9	18.4	17.9	17.6

COMPOSITE ROOF SPAN OF 14'-0"

CARRY BEAM SCHEDULE FOR SOLID ROOF/SCREEN ENCLOSURE COMBO

MEMBER TYPE \ SCREEN ROOF TRIBUTARY WIDTH (FT.)	8	10	12	14	16	18	20	22	24	26
	EFFECTIVE SPAN (FT.)									
2x4 SMB	7.0	6.6	6.2	5.8	5.6	5.4	5.1	4.7	4.3	4.1
2x5 SMB	8.8	8.1	7.7	7.3	7.0	6.6	6.3	5.8	5.4	5.0
2x6 SMB	12.2	11.7	11.5	11.1	10.8	10.6	10.4	10.1	9.6	9.0
2x7 SMB	13.5	13.0	12.5	12.2	12.0	11.7	11.5	11.1	10.8	10.3
2x8 SMB	16.5	16.1	15.7	15.3	14.9	14.6	14.3	14.1	13.6	13.2
2x9 SMB	17.5	17.0	16.7	16.4	16.0	15.4	15.1	14.8	14.3	13.7
2x10 SMB	22.3	21.6	21.2	20.8	20.5	20.1	19.5	19.0	18.5	18.1
2x5 TFB	12.8	12.2	11.9	11.6	11.3	11.1	10.7	10.3	10.1	9.6
2x7 TFB	15.2	14.7	14.3	14.0	13.6	13.4	13.0	12.6	12.2	11.9
2x9 TFB	19.4	18.7	18.2	17.9	17.5	17.2	16.7	16.4	15.9	15.6

COMPOSITE ROOF SPAN OF 18'-0"

NOTES:

1. ALL ALUMINUM FRAME MEMBER TABLES SHOWN ARE CALCULATED FOR EXPOSURE B TYPE TERRAIN. IF EXPOSURE C IS NEEDED, THEN USE THE MULTIPLIERS AS FOLLOWS: WITH A HEIGHT RANGE OF [0'-15': MULTIPLY SPAN BY 0.83], [15'-20': MULTIPLY SPAN BY 0.78], [20'-25': MULTIPLY SPAN BY 0.74], [25'-30': MULTIPLY SPAN BY 0.71].

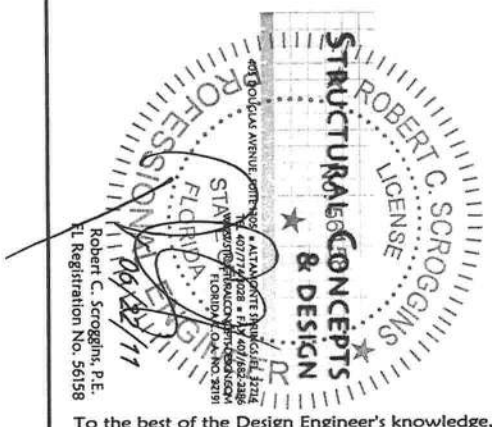

Robert C. Scroggins, P.E.
FL Registration No. 56158

To the best of the Design Engineer's knowledge, the plans and specifications for this project comply with the applicable minimum building codes as determined by the local authority in accordance with the Florida Statutes.

REV.	DATE	DESCRIPTION

JOB NO.: #11-034
DRAWN BY: TLW
CHECKED BY: RCS
APPROVED BY: RCS
DATE: 06/22/11
SHEET S-2.11

Client: Florida Pool Enclosures, Inc — Committed to Your Satisfaction
927 HICKORY STREET n ALTAMONTE SPRINGS, FL 32701
TEL 407/260-2800 n FAX 407/260-6411
WWW.FLORIDAPOOLENCLOSURES.COM

Project: Residential Pool Screen Enclosure
_____, Florida

Structural Column & Beam Schedules

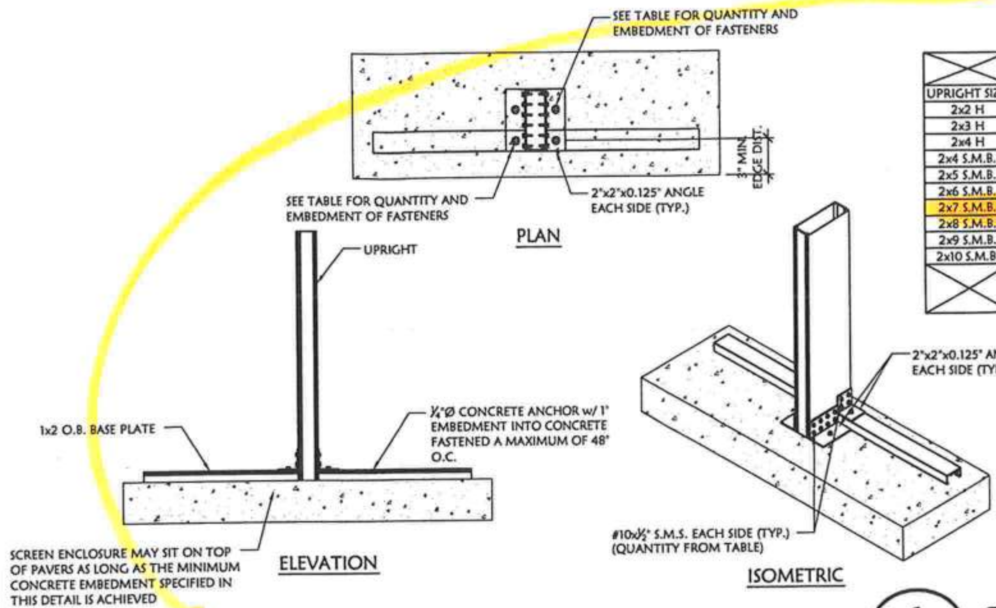

MAIN COLUMN UNDER BEAM CONNECTION

COLUMN TO DECK FASTENERS REQUIRED

	MIN. QUANTITY OF SPECIFIED FASTENERS			
	FASTENERS TO UPRIGHT		FASTENERS TO DECK	
UPRIGHT SIZE	#10 S.M.S.	#14 S.M.S.	1/4"Ø TAPSONS	3/8"Ø TAPCONS
2x2 H	2	2	1	1
2x3 H	3	2	1	1
2x4 H	4	4	2	1
2x4 S.M.B.	4	4	2	1
2x5 S.M.B.	5	4	2	1
2x6 S.M.B.	6	4	3	2
2x7 S.M.B.	7	6	3	2
2x8 S.M.B.	N/A	8	4	3
2x9 S.M.B.	N/A	9	4	3
2x10 S.M.B.	N/A	10	N/A	4
	N/A	N/A	1.25	1.25
	MIN. EMBEDMENT DEPTH (INCHES)			

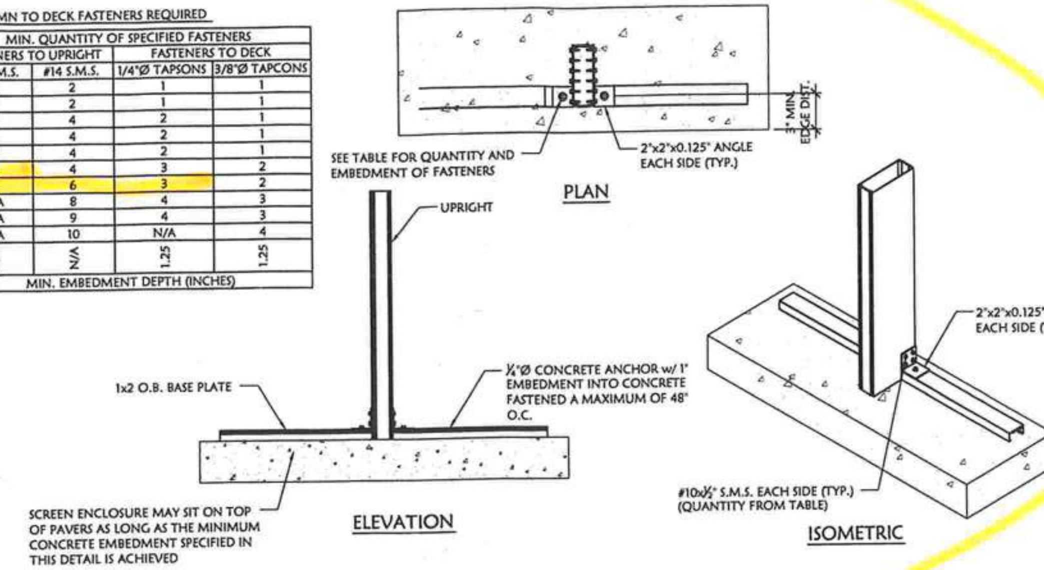

COLUMN @ SIDE WALL CONNECTION

1 / S-2.3 COLUMN CONNECTION

SCALE: 1½" = 1'-0"

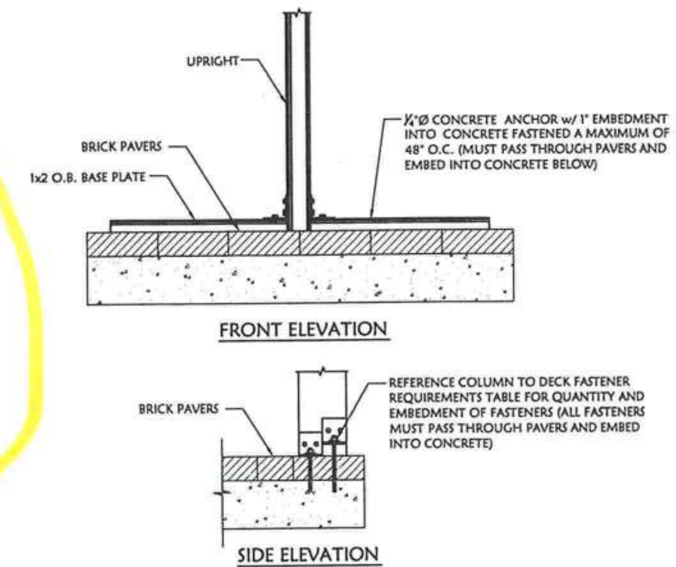

2 / S-2.3 COLUMN TO DECK w/ BRICK PAVERS

SCALE: 1½" = 1'-0"

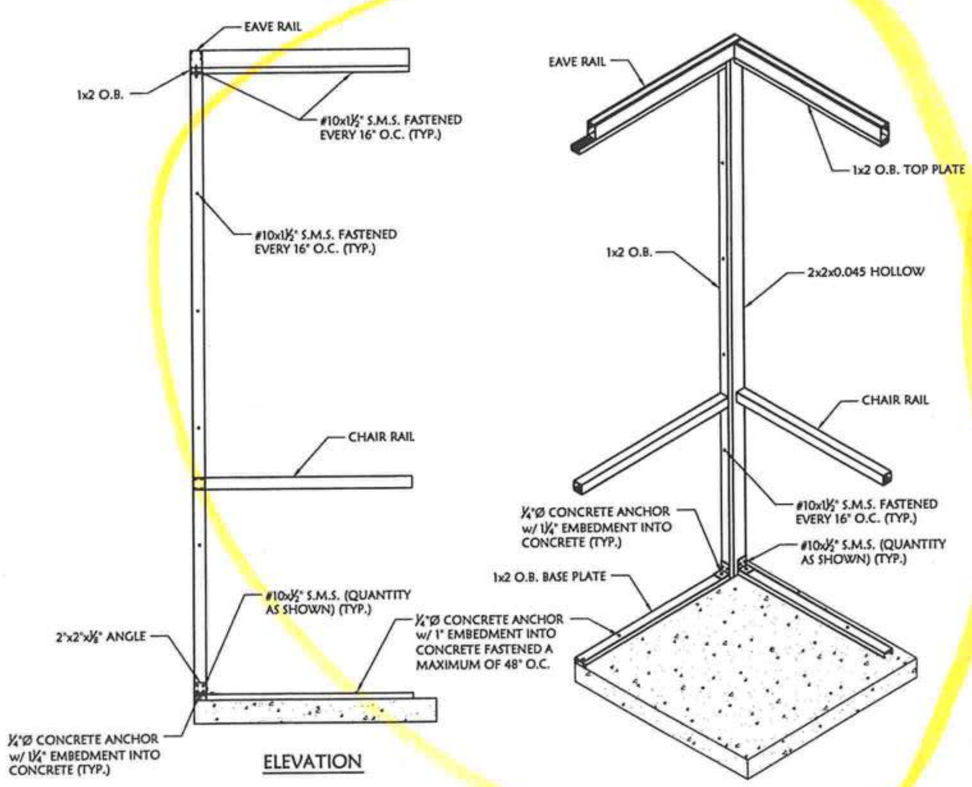

3 / S-2.3 FRONT WALL TO SIDE WALL

N.T.S.

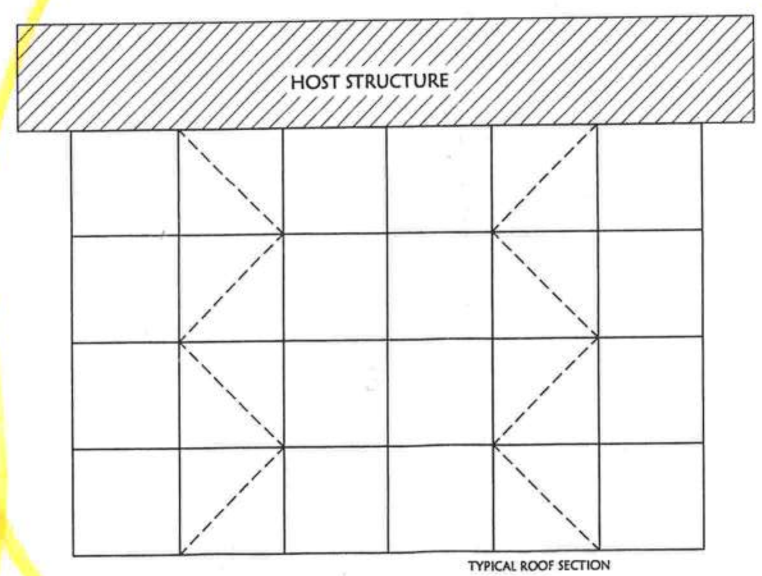

4 / S-2.3 DIAGONAL ROOF BRACING PLAN

N.T.S.

NOTES:

1. ROOF BRACING MAY BE PLACED IN EITHER THE FIRST OR SECOND ROOF SECTION ON EACH SIDE OF THE ENCLOSURE
2. THE ORIENTATION (i.e. DIRECTION) OF THE ROOF BRACING IS INCIDENTAL TO STRUCTURAL INTEGRITY
3. IF THERE ARE AN ODD NUMBER OF PANELS, A BRACE IN THE CENTER MAY BE OMITTED
4. ANY ENCLOSURE THAT IS BRACED ON MORE THAN ONE SIDE BY THE HOST STRUCTURE DOES NOT REQUIRE ROOF BRACING

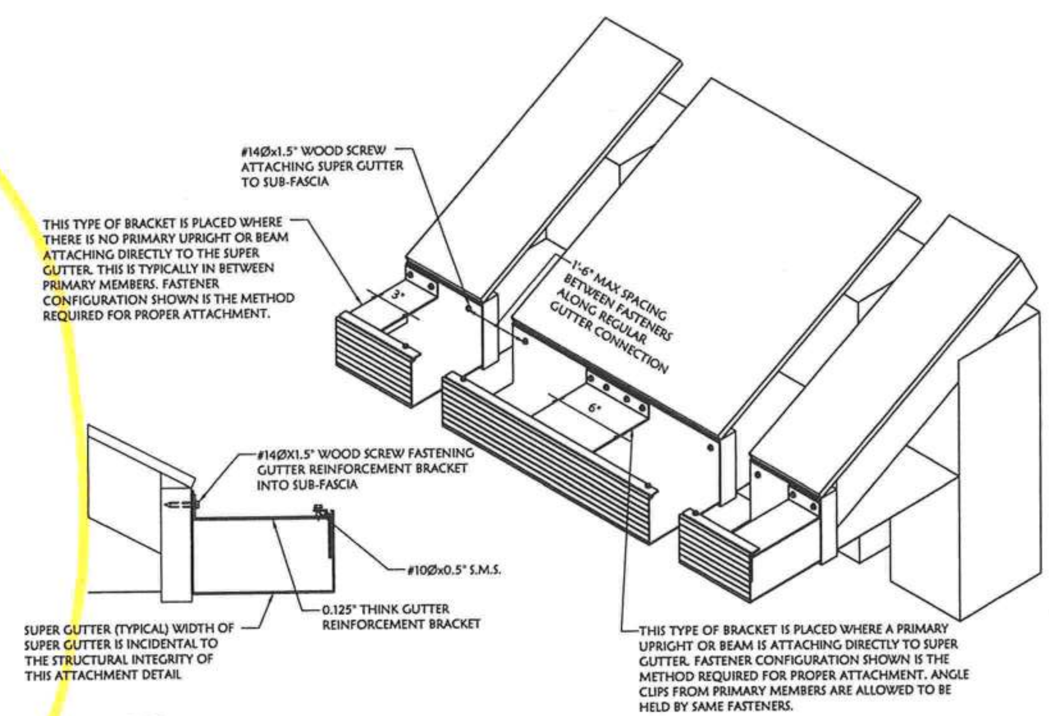

5 / S-2.3 SUPPER GUTTER CONNECTION TO HOST STRUCTURE

SCALE: 1½" = 1'-0"

NOTES:

1. FASCIA SHOWN IS A PLUMB CUT FASCIA. IF THE FASCIA IS SQUARE CUT (PERPENDICULAR TO THE ROOF PITCH) THEN THE SUPER GUTTER MAY HAVE SOMETHING BEHIND IT (I.E. "L-ANGLE" OR WOOD WEDGE) TO KEEP IT PLUMB. THIS COMPONENT IS INCIDENTAL TO THE STRUCTURAL INTENTION OF THIS DESIGN.
2. FOR A RUN OF SUPER GUTTER THAT NON-LOAD BEARING, THE MAX SPACING OF THE 3" REINFORCEMENT BRACKETS IS 60".
3. FOR A RUN OF SUPER GUTTER THAT HAS A STRUCTURAL OR LOAD BEARING COMPONENT ATTACHING TO IT AND THERE IS A CONTINUOUS LOAD ACROSS THE SUPER GUTTER WITHOUT PRIMARY LOAD POINTS (I.E. BEAM OR UPRIGHT) THEN THE MAXIMUM SPACING BETWEEN THE 3" REINFORCEMENT BRACKETS IS 48".
4. GUTTER MAY BE ATTACHED TO A CONVENTIONAL WOOD FRAMED WALL IN THE SAME MANNER THAT IS SHOWN IN THIS DETAIL. IF THE WALL IS A C.M.U. THEN REPLACE THE #14Ø WOOD SCREWS WITH 0.25"ØX1.25" TAPCONS (OR EQUIVALENT). THIS CONNECTION SHALL ALSO REMAIN THE SAME FOR A SUPER GUTTER ATTACHING TO A CARRY BEAM WHERE THE WOOD LAG SCREWS ARE X 0.75" S.M.S. REPLACED BY #10Ø.
5. WHEN THE SUPER GUTTER IS BEING USED FOR STRUCTURAL PURPOSES (I.E. STRUCTURAL SUPPORT MEMBERS ATTACH TO IT) THEN THE FASTENERS THAT ATTACH TO THE FASCIA MUST PENETRATE INTO THE SUB-FASCIA AT A MINIMUM OF 1 IN. EMBEDMENT.

ROBERT C. SCROGGINS LICENSE No. 56158 STATE OF FLORIDA PROFESSIONAL ENGINEER

STRUCTURAL CONCEPTS & DESIGN
505 DOUGLAS AVENUE, SUITE 1305 • ALTAMONTE SPRINGS, FL 32714
TEL 407-774-3028 • FAX 407-682-2386
WWW.STRUCTURALCONCEPTSDESIGN.COM
FLORIDA C.O.A. NO. 27191

06/22/11

Robert C. Scroggins, P.E.
FL Registration No. 56158

To the best of the Design Engineer's knowledge, the plans and specifications for this project comply with the applicable minimum building codes as determined by the local authority in accordance with the Florida Statutes.

REV.	DATE	DESCRIPTION

Client: Florida Pool Enclosures, Inc
927 HICKORY STREET • ALTAMONTE SPRINGS, FL 32701
TEL 407/260-2800 • FAX 407/260-6481
WWW.FLORIDAPOOLENCLOSURES.COM

Project: Residential Pool Screen Enclosure
_______, Florida

Structural Framing
Sections & Details

JOB NO.:	#11-034
DRAWN BY:	TLW
CHECKED BY:	RCS
APPROVED BY:	RCS
DATE:	06/22/11
SHEET	S-2.3

F:\Structural Server\Florida Pool Enclosures\2011 Projects\11-034 Typical Pool Screen Enclosures 06/22/11 TLW

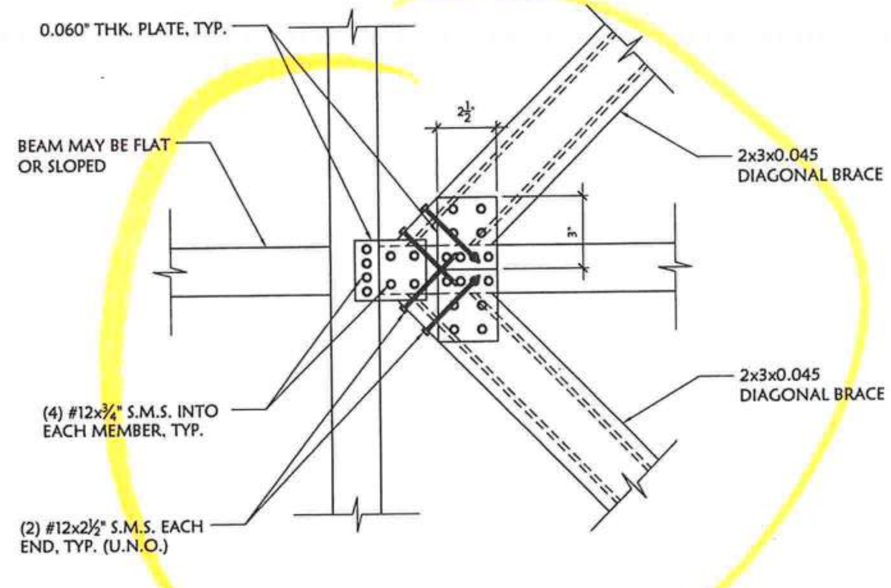

1 / S-2.4 TYPICAL ROOF BRACE TO BEAM CONNECTION

SCALE: 1½" = 1'-0"

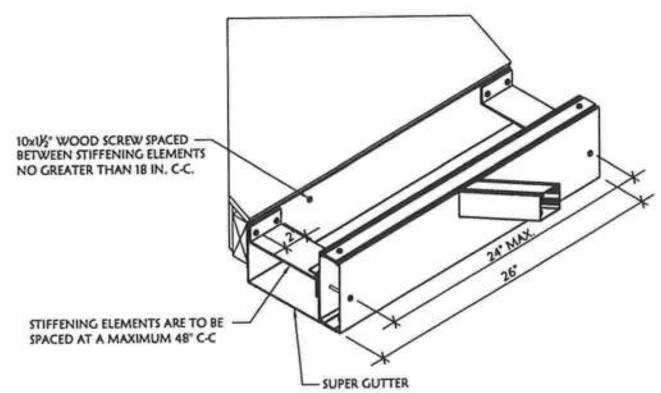

NOTES:

1. 2"x2"x0.125" ANGLE MAY BE USED IN LIEU OF (OR IN ADDITION TO) THE #10x3" S.M.S. ATTACHMENT AND MAY BE ON TOP OR BOTTOM OF THE ATTACHING FRAME MEMBER. THE SPACING AND TYPE OF FASTENERS WILL REMAIN THE SAME AS STATED IN THIS DETAIL. EACH FASTENER WILL BE ON THE SAME PLANE FOR EACH OPPOSING FACE (FLANGE) OF THE 2x2 ANGLE.
2. SUPER GUTTER IS SHOWN AS THE COMPONENT BEING FASTENED TO, BUT THIS DETAIL CAN BE USED IN THE CASE WHERE SUPER GUTTER IS SUBSTITUTED FOR A DIFFERENT ALUMINUM STRUCTURAL COMPONENT (I.E. SELF-MATING BEAM ETC.) PROVIDED THE PRIMARY STRUCTURAL COMPONENT IS SUPPORTED PROPERLY IN ACCORDANCE WITH THE DETAILS IN THE SEALED ENGINEERING PACKAGE.

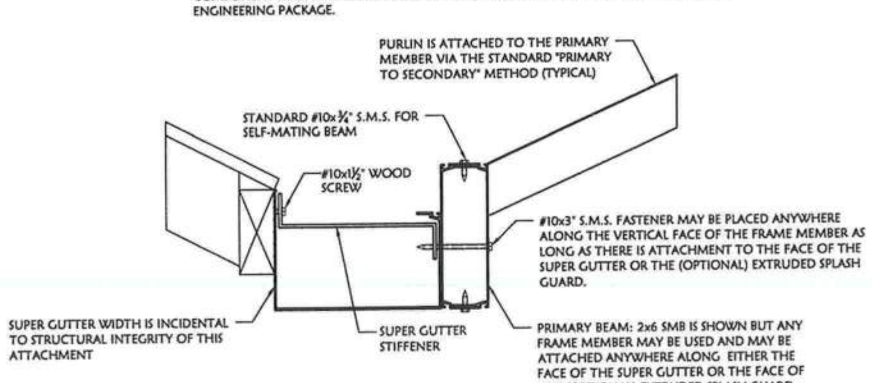

2 / S-2.4 PARALLEL FRAME MEMBER TO SUPER GUTTER

N.T.S.

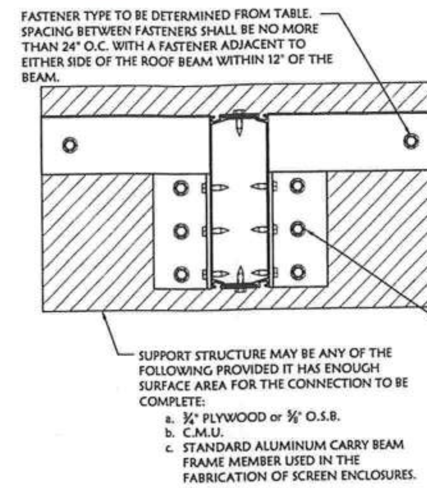

1. QUANTITY OF FASTENERS ATTACHING TO BEAM ARE TO BE DETERMINED USING THE FASTENER TABLE. TYPE OF FASTENERS WILL BE #10 S.M.S. FOR BEAM SIZES BETWEEN 2X4 - 2X7 & #14 S.M.S. FOR BEAM SIZES 2X8 - 2X10.
2. FASTENERS SHALL NOT BE LESS THAN 0.75" CENTER-TO-CENTER FROM EACH OTHER NOR SHALL THEY BE GREATER THAN 2" CENTER-TO-CENTER FROM EACH OTHER.
3. FASTENERS MAY BE ARRANGED IN ANY PATTERN PROVIDED THE MINIMUM QTY FROM THE TABLE IS MET ALONG WITH THE ABOVE MENTIONED SPACING REQUIREMENTS.

NOTE:
U-CHANNEL MAY BE USED IN LIEU OF 2x2 ANGLE CLIPS ON EITHER SIDE OF THE BEAM AS LONG AS THE THICKNESS OF THE U-CHANNEL BEING USED IS GREATER THAN OR EQUAL TO THE THICKNESS OF THE BEAM TO WHICH IT IS ATTACHING.

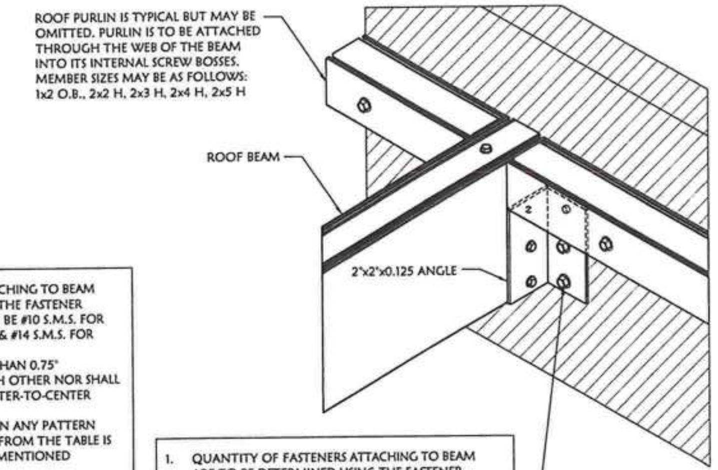

1. QUANTITY OF FASTENERS ATTACHING TO BEAM ARE TO BE DETERMINED USING THE FASTENER TABLE. TYPE OF FASTENERS WILL BE #10 S.M.S. FOR BEAM SIZES BETWEEN 2X4 - 2X7 & #14 S.M.S. FOR BEAM SIZES 2X8 - 2X10.
2. FASTENERS SHALL NOT BE LESS THAN 0.75" CENTER-TO-CENTER FROM EACH OTHER NOR SHALL THEY BE GREATER THAN 2" CENTER-TO-CENTER FROM EACH OTHER.
3. FASTENERS MAY BE ARRANGED IN ANY PATTERN PROVIDED THE MINIMUM QTY FROM THE TABLE IS MET ALONG WITH THE ABOVE MENTIONED SPACING REQUIREMENTS.

3 / S-2.4 STRAIGHT BEAM TO SUPPORT STRUCTURE

N.T.S.

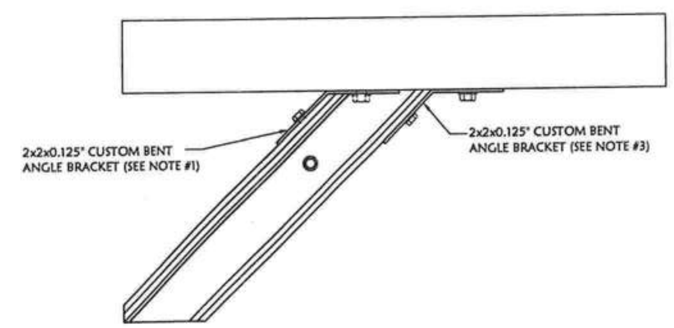

4 / S-2.4 ANGLE BEAM TO SUPPORT STRUCTURE

N.T.S.

NOTES:

1. ACUTE SIDE OF BEAM MAY BE NOTCHED TO ALLOW FOR THE 2X2X0.125" CUSTOM BENT ANGLE BRACKET TO SLIDE IN BETWEEN THE BEAM AND SUPPORT STRUCTURE. THE FABRICATION METHOD TO ACHIEVE THIS WOULD BE TO SIMPLY ATTACH THE ANGLE BRACKET TO THE BEAM PRIOR TO INSTALLING THE BEAM HALF-SHELL, PROVIDED THE ACUTE SIDE OF THE BEAM IS INSTALLED FIRST. THIS WOULD ALLOW FOR THE FASTENERS TO BE INSTALLED INTO THE SUPPORT STRUCTURE PRIOR TO THE INSTALLATION OF THE OBTUSE SIDE OF THE BEAM.
2. IF THE FABRICATION METHOD SHOWN HERE CANNOT BE ACHIEVED, THEN A SECONDARY 2x2x0.125" ANGLE MUST BE INSTALLED BENEATH THE BEAM. TYPE AND QTY OF FASTENERS SHOULD REFERENCE THE ROW LABLED 2x2 H IN THE "FASTENER REQUIREMENTS" TABLE.
3. A CUSTOM BENT 2x2x0.125" ANGLE MUST ALWAYS BE INSTALLED ON THE OBTUSE SIDE OF THE BEAM. 4) ALL OTHER NOTES AND SPECIFICATIONS FROM THE "STRAIGHT BEAM TO SUPPORT STRUCTURE" DETAIL APPLY TO THIS DETAIL.

BEAM TO HOIST STRUCTURE FASTENER REQUIREMENTS

	MIN. QUANTITY OF SPECIFIED FASTENERS					
	FASTENERS TO BEAM		FASTENERS TO CMU		FASTENERS TO WOOD	
UPRIGHT SIZE	#10 S.M.S.	#14 S.M.S.	1/4"Ø TAPCONS	3/8"Ø TAPCONS	#10 WOOD SCREW	#14 WOOD SCREW
2x2 H	2	2	1	1	2	1
2x3 H	3	3	1	1	3	1
2x4 H	4	4	1	1	4	2
2x4 S.M.B.	4	4	1	1	4	2
2x5 S.M.B.	5	5	2	1	5	3
2x6 S.M.B.	6	6	3	2	6	4
2x7 S.M.B.	7	7	4	2	7	5
2x8 S.M.B.	8	8	4	3	8	6
2x9 S.M.B.	9	9	5	4	9	7
2x10 S.M.B.	10	10	6	5	10	8
	N/A	N/A	1.25	1.25	1.0	1.0
	MIN. EMBEDMENT DEPTH (INCHES)					

To the best of the Design Engineer's knowledge, the plans and specifications for this project comply with the applicable minimum building codes as determined by the local authority in accordance with the Florida Statutes.

ROBERT C. SCROGGINS LICENSE No. 56158 STATE OF FLORIDA PROFESSIONAL ENGINEER

STRUCTURAL CONCEPTS & DESIGN
405 DOUGLAS AVENUE, SUITE 1305 • ALTAMONTE SPRINGS, FL 32714 • TEL 407/774-3026 • FAX 407/682-2386 • WWW.STRUCTURALCONCEPTSANDDESIGN.COM • FLORIDA C.O.A. NO. 27191

06/22/11
Robert C. Scroggins, P.E.
FL Registration No. 56158

REV.	DATE	DESCRIPTION

Client: Florida Pool Enclosures, Inc
927 HICKORY STREET • ALTAMONTE SPRINGS, FL 32701 • TEL 407/260-2800 • FAX 407/260-6411 • WWW.FLORIDAPOOLENCLOSURES.COM

Project: Residential Pool Screen Enclosure
________, Florida

Structural Framing Sections & Details

JOB NO.:	#11-034
DRAWN BY:	TLW
CHECKED BY:	RCS
APPROVED BY:	RCS
DATE:	06/22/11

SHEET S-2.4

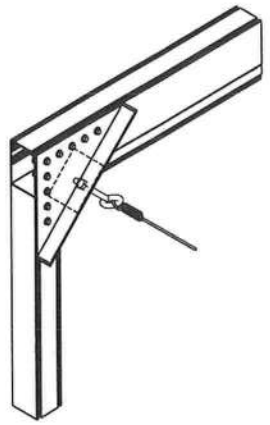

#10ØX0.75" S.M.S. QUANTITY SHOWN IS THE MINIMUM REQUIREMENT. MAX SPACING BETWEEN FASTENERS IS 2" WITH THE MINIMUM SPACING BETWEEN FASTENERS AT 0.75". IF THE COMPONENT THAT THE CABLE IS BEING ATTACHED TO IS CONFIGURED IN SUCH A WAY THAT PREVENTS TWO PERPENDICULAR ROWS, THEN A SECOND ROW OR COLUMN OF FASTENERS MAY BE ADDED PARALLEL (BUT NOT COLINEAR) TO THE DEFAULT ROW OR COLUMN OF FASTENERS AT ALTERNATING SPACING.

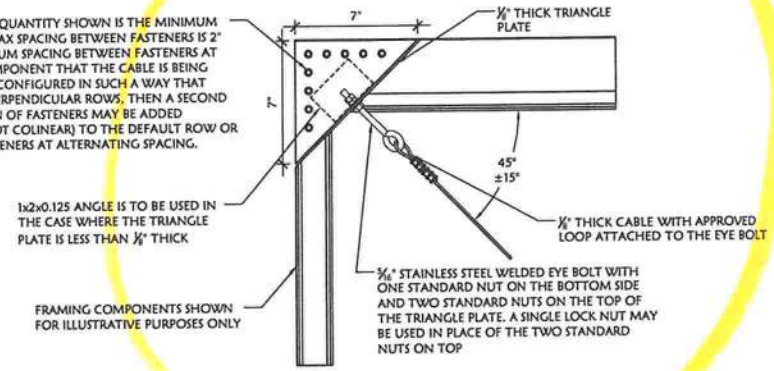

TRIANGLE PLATE TOP ATTACHMENT

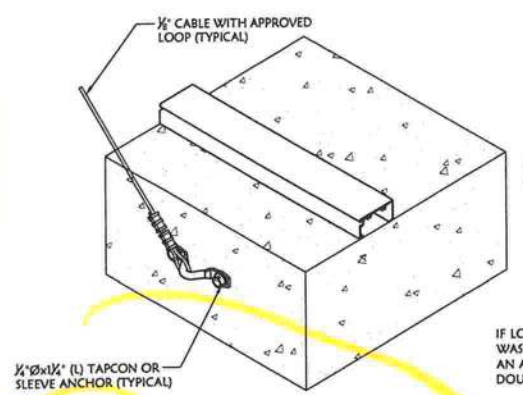

CAMELBACK TO SIDE DECK

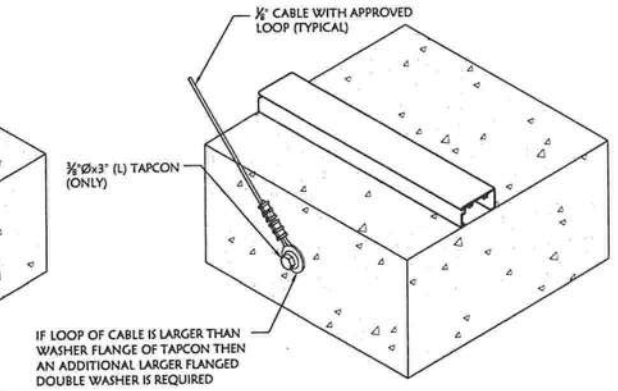

SINGLE CONCRETE FASTENER TO SIDE DECK

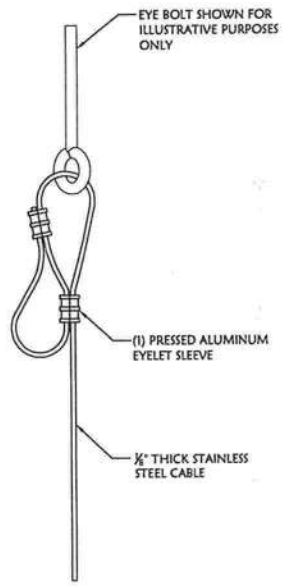

FIGURE 8 LOOP

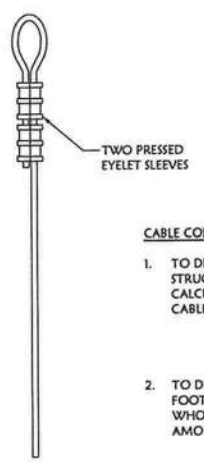

SINGLE LOOP

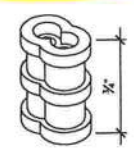

PRESSED EYELET SLEEVE
(SHOWN AFTER BEING MECHANICALLY PRESSED

CABLE CONNECTION NOTES:

1. TO DETERMINE THE QUANTITY OF CABLES NEEDED FOR A SCREEN WALL BRACED ON ONE SIDE BY A HOST STRUCTURE TAKE THE TOTAL SQUARE FOOTAGE OF THE BRACED WALL AND DIVIDE BY 250. ROUND THE CALCULATED VALUE TO THE CLOSEST WHOLE NUMBER AND SUBTRACT ONE. IT IS INTENDED TO NOT HAVE A CABLE ON A WALL THAT IS LESS THAN 250 S.F.

   EXAMPLE: 430 S.F. / 250 = 1.72 --> ROUNDS TO 2 --> 2-1 = 1 CABLE
   EXAMPLE: 230 S.F. / 250 = 0.92 --> ROUNDS TO 1 --> 1-1 = 0 CABLES

2. TO DETERMINE THE QUANTITY OF CABLES NEEDED FOR AN UNBRACED SCREEN WALL, TAKE THE TOTAL SQUARE FOOTAGE OF THE UNBRACED WALL AND DIVIDE BY 250. ROUND THE CALCULATED VALUE TO THE CLOSEST WHOLE NUMBER AND MULTIPLY BY 2. IT IS REQUIRED THAT AN UNBRACED SCREEN WALL HAVE AN EQUAL AMOUNT OF CABLES OPPOSING EACH OTHER.

   EXAMPLE: 535 S.F. / 250 = 2.14 --> ROUNDS TO 2 --> 2*2 = 4 CABLES (2 PAIRS OF OPPOSING CABLES)
   EXAMPLE: 780 S.F. / 250 = 3.12 --> ROUNDS TO 3 --> 3*2 = 6 CABLES (3 PAIRS OF OPPOSING CABLES)

3. ANY ONE OF THE APPROVED CABLE-TO-DECK ATTACHMENTS SHOWN MAY BE USED. FIELD CONDITIONS WILL DICTATE THE TYPE OF ATTACHMENT USED AND MAY CHANGE DYNAMICALLY FROM THE ORIGINAL DESIGN INTENT. THIS HAS NO BEARING ON THE DESIGN OR THE STRUCTURAL INTEGRITY OF THE ENCLOSURE AND THEREFORE IS ALLOWED TO BE DONE, AS LONG AS ONE OF THE APPROVED ATTACHMENT DETAILS IS UTILIZED.

4. CABLES MAY ATTACH THROUGH PAVERS AS LONG AS THE MINIMUM CONCRETE EMBEDMENT OF 1 ½" IS ACHIEVED BY USING A LONGER TAPCON

5. MINIMUM CONCRETE EDGE DISTANCE FOR ALL CONCRETE FASTENERS IS 2 ½".

6. CABLES SHOULD BE AT A 45° ANGLE TO THE VERTICAL UPRIGHTS (±15°).

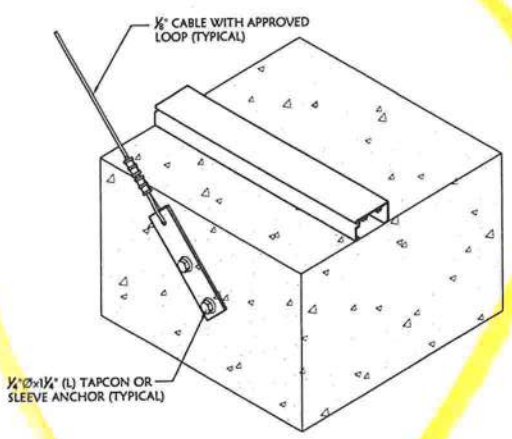

FLAT BAR TO SIDE OF DECK

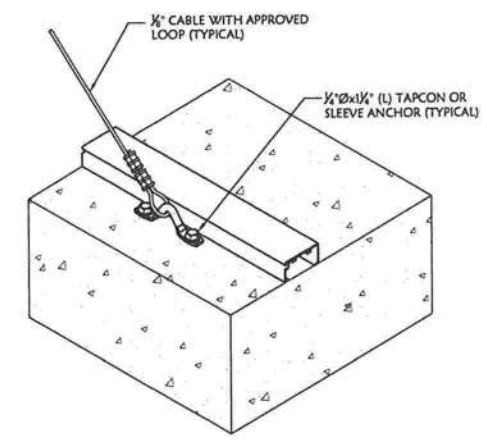

CAMELBACK TO TOP OF DECK

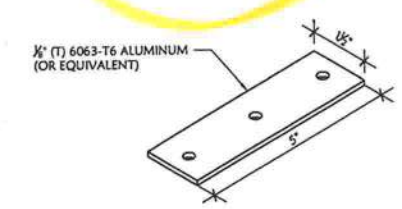

FLAT BAR PLATE

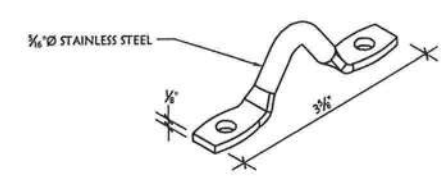

CAMELBACK CLIP BRACKET

1 / S-2.5 CABLE ATTACHMENT DETAILS
N.T.S.

ROBERT C. SCROGGINS LICENSE No. 56158 STATE OF FLORIDA PROFESSIONAL ENGINEER

STRUCTURAL CONCEPTS & DESIGN
405 DOUGLAS AVENUE, SUITE 1506 • ALTAMONTE SPRINGS, FL 32714
TEL 407/774-3022 • FAX 407/682-2386
WWW.STRUCTURALCONCEPTSDESIGN.COM
FLORIDA C.O.A. NO. 27191

06/22/11
Robert C. Scroggins, P.E.
Fl. Registration No. 56158

To the best of the Design Engineer's knowledge, the plans and specifications for this project comply with the applicable minimum building codes as determined by the local authority in accordance with the Florida Statutes.

Structural Framing Sections & Details

Project:
Residential Pool Screen Enclosure
_____, Florida

Client:
Florida Pool Enclosures, Inc
Licensed & Insured
927 HICKORY STREET • ALTAMONTE SPRINGS, FL 32701
TEL 407/260-0800 • FAX 407/260-0041
WWW.FLORIDAPOOLENCLOSURES.COM

REV.	DATE	DESCRIPTION

JOB NO. :	#11-034
DRAWN BY:	TLW
CHECKED BY:	RCS
APPROVED BY:	RCS
DATE:	06/22/11

SHEET
S-2.5

F:\Structural Server\Florida Pool Enclosures\2011 Projects\11-034 Typical Pool Screen Enclosures 06/22/11 TLW

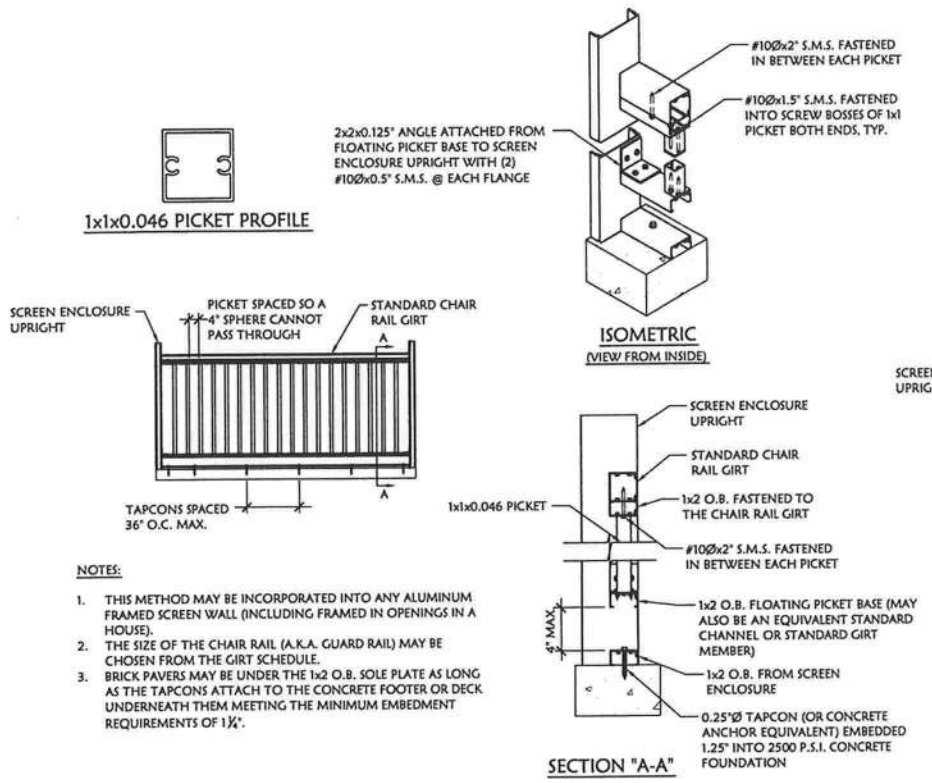

NOTES:

1. THIS METHOD MAY BE INCORPORATED INTO ANY ALUMINUM FRAMED SCREEN WALL (INCLUDING FRAMED IN OPENINGS IN A HOUSE).
2. THE SIZE OF THE CHAIR RAIL (A.K.A. GUARD RAIL) MAY BE CHOSEN FROM THE GIRT SCHEDULE.
3. BRICK PAVERS MAY BE UNDER THE 1x2 O.B. SOLE PLATE AS LONG AS THE TAPCONS ATTACH TO THE CONCRETE FOOTER OR DECK UNDERNEATH THEM MEETING THE MINIMUM EMBEDMENT REQUIREMENTS OF 1 ½".

1 / S-2.6 RETRO-FIT PICKET INTO SCREEN WALL (FLOATING PICKET BASE)

N.T.S.

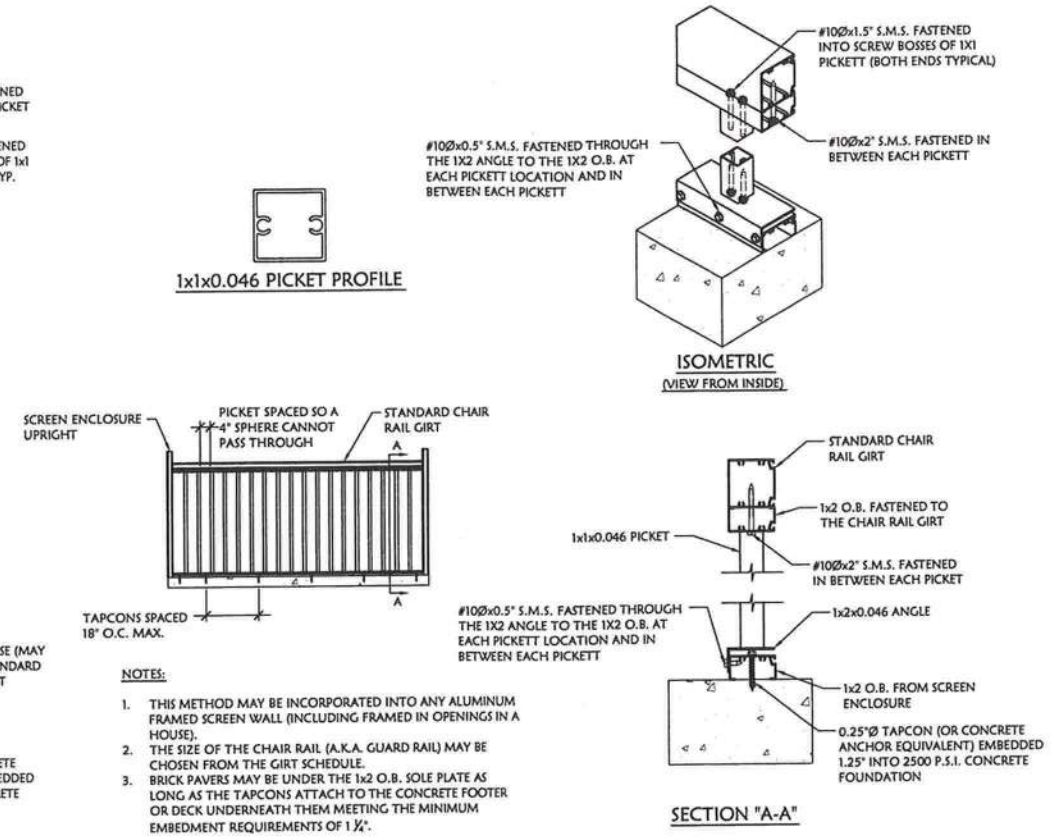

NOTES:

1. THIS METHOD MAY BE INCORPORATED INTO ANY ALUMINUM FRAMED SCREEN WALL (INCLUDING FRAMED IN OPENINGS IN A HOUSE).
2. THE SIZE OF THE CHAIR RAIL (A.K.A. GUARD RAIL) MAY BE CHOSEN FROM THE GIRT SCHEDULE.
3. BRICK PAVERS MAY BE UNDER THE 1x2 O.B. SOLE PLATE AS LONG AS THE TAPCONS ATTACH TO THE CONCRETE FOOTER OR DECK UNDERNEATH THEM MEETING THE MINIMUM EMBEDMENT REQUIREMENTS OF 1 ½".

2 / S-2.6 RETRO-FIT PICKET INTO SCREEN WALL (1x2 ANGLE BASE)

N.T.S.

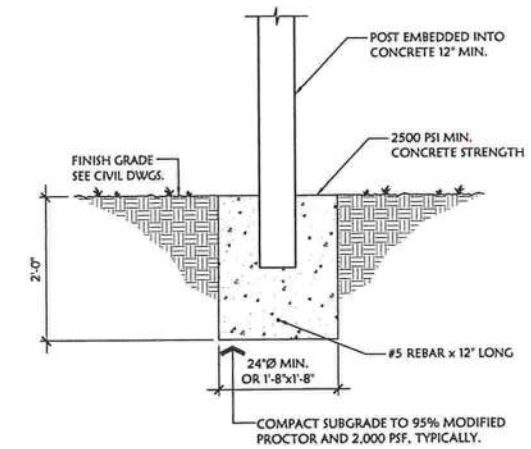

3 / S-2.6 TYPICAL ISOLATED FOOTING

SCALE ½" = 1'-0"

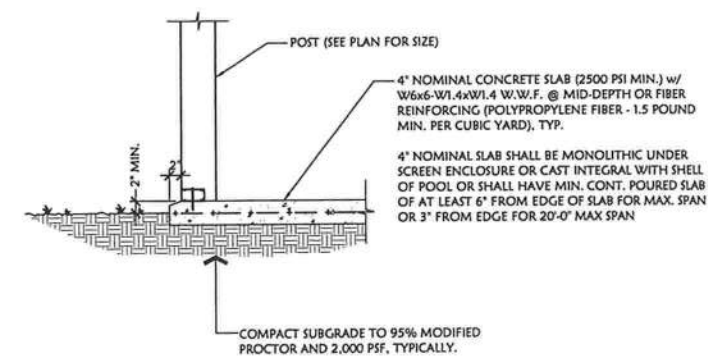

4 / S-2.6 POST/CONCRETE SLAB DETAIL

SCALE ½" = 1'-0"

(MAX. POOL ENCLOSURE ROOF SPAN OF 40'-0"

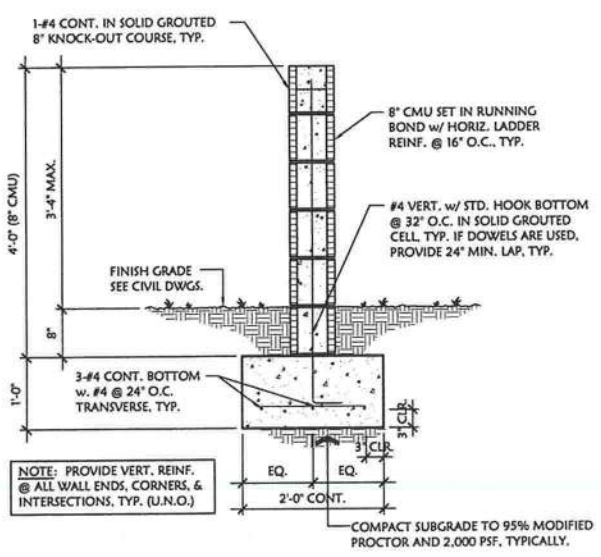

NOTE: PROVIDE VERT. REINF. @ ALL WALL ENDS, CORNERS, & INTERSECTIONS, TYP. (U.N.O.)

5 / S-2.6 SECTION @ CMU WALL

SCALE: ¾" = 1'-0"

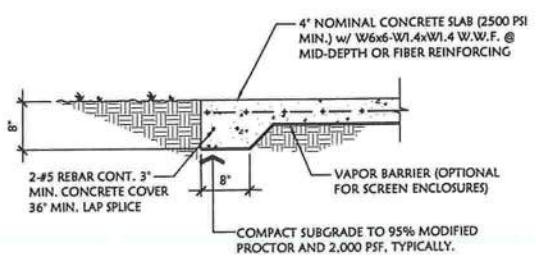

6 / S-2.6 TYPICAL TURNDOWN SLAB FOOTING

SCALE ½" = 1'-0"

(MAX. POOL ENCLOSURE ROOF SPAN OF 50'-0"

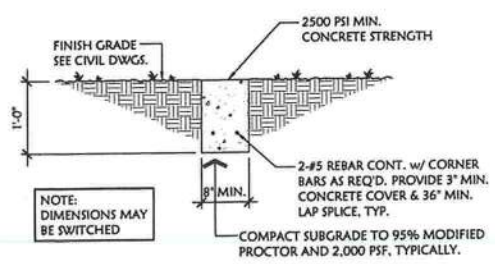

NOTE: DIMENSIONS MAY BE SWITCHED

7 / S-2.6 TYPICAL CONTINUOUS PERIMETER FOOTING

SCALE ½" = 1'-0"

(MAX. POOL ENCLOSURE ROOF SPAN OF 50'-0"

ROBERT C. SCROGGINS LICENSE No. 56158 STATE OF FLORIDA PROFESSIONAL ENGINEER

STRUCTURAL CONCEPTS & DESIGN

405 DOUGLAS AVENUE, SUITE 1203 • ALTAMONTE SPRINGS, FL 32714
TEL 407/774-3028 • FAX 407/682-2386
WWW.STRUCTURALCONCEPTSDESIGN.COM
FLORIDA C.O.A. NO. 27191

06/22/11

Robert C. Scroggins, P.E.
FL Registration No. 56158

To the best of the Design Engineer's knowledge, the plans and specifications for this project comply with the applicable minimum building codes as determined by the local authority in accordance with the Florida Statutes.

Structural Framing Sections & Details

Project: Residential Pool Screen Enclosure, Florida

Client: Florida Pool Enclosures, Inc
927 HICKORY STREET • ALTAMONTE SPRINGS, FL 32701
TEL 407-831-7665 • FAX 407-831-8661
STEVE@FLORIDAPOOLENCLOSURES.COM

REV.	DATE	DESCRIPTION

JOB NO.:	#11-034
DRAWN BY:	TLW
CHECKED BY:	RCS
APPROVED BY:	RCS
DATE:	06/22/11

SHEET S-2.6

F:\Structural Server\Florida Pool Enclosures\2011 Projects\11-034 Typical Pool Screen Enclosures 06/22/11 TLW

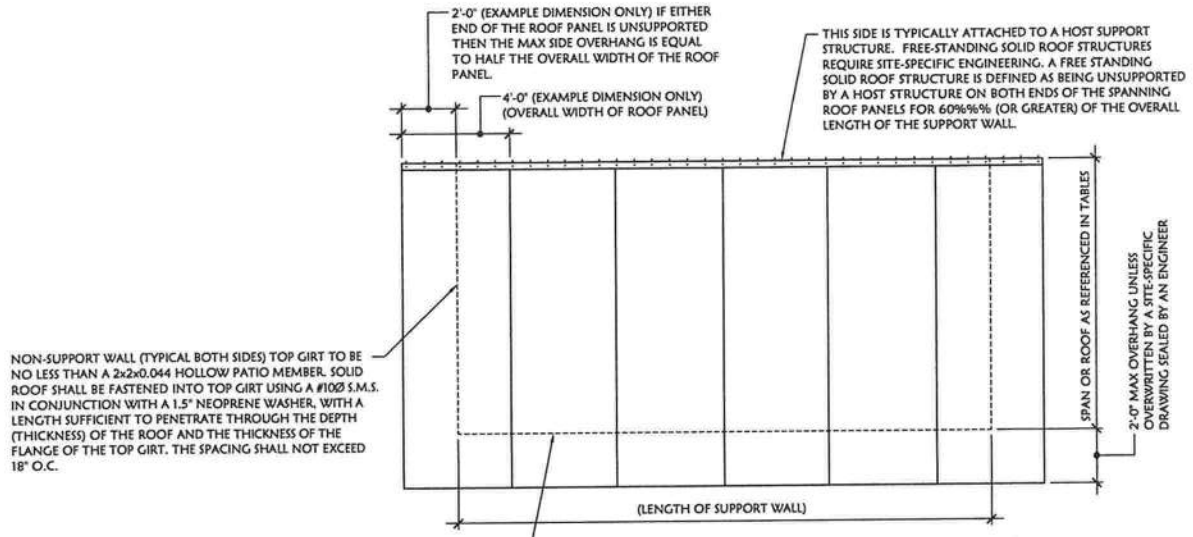

NOTES:

1. THE PLAN VIEW IN THIS DETAIL SHOWS AN ELITE COMPOSITE ROOF BUT THE SAME RULES APPLY TO AN ALUMINUM PAN ROOF UNLESS OTHERWISE NOTED.
2. THERE ARE TWO TYPES OF WALLS: SUPPORT WALLS AND NON-SUPPORT WALLS. THE SUPPORT WALL WILL CONSIST OF A HEADER GIRT SUPPORTING THE SOLID ROOF THAT CAN EITHER RUN CONTINUOUSLY ACROSS THE ENTIRE LENGTH OF THE WALL WITH INTERMITTENT SUPPORT FROM COLUMNS (SEE "INDEPENDENT POST TO CARRY BEAM" DETAIL) OR BE BROKEN UP TO SPAN BETWEEN THE SUPPORT COLUMNS VIA BEING INTERNALLY FASTENED INTO SCREW BOSSES THROUGH THE WEB OF THE SUPPORT COLUMNS (SEE "PRIMARY MEMBER TO SECONDARY MEMBER" DETAIL). NON-SUPPORT WALLS (A.K.A SIDE WALLS) ARE NOT USED TO SUPPORT THE ROOF AND THEREFORE ARE NOT REQUIRED TO MAINTAIN A HEADER GIRT.

1 / S-2.7 SOLID ALUMINUM ROOF PLAN

N.T.S.

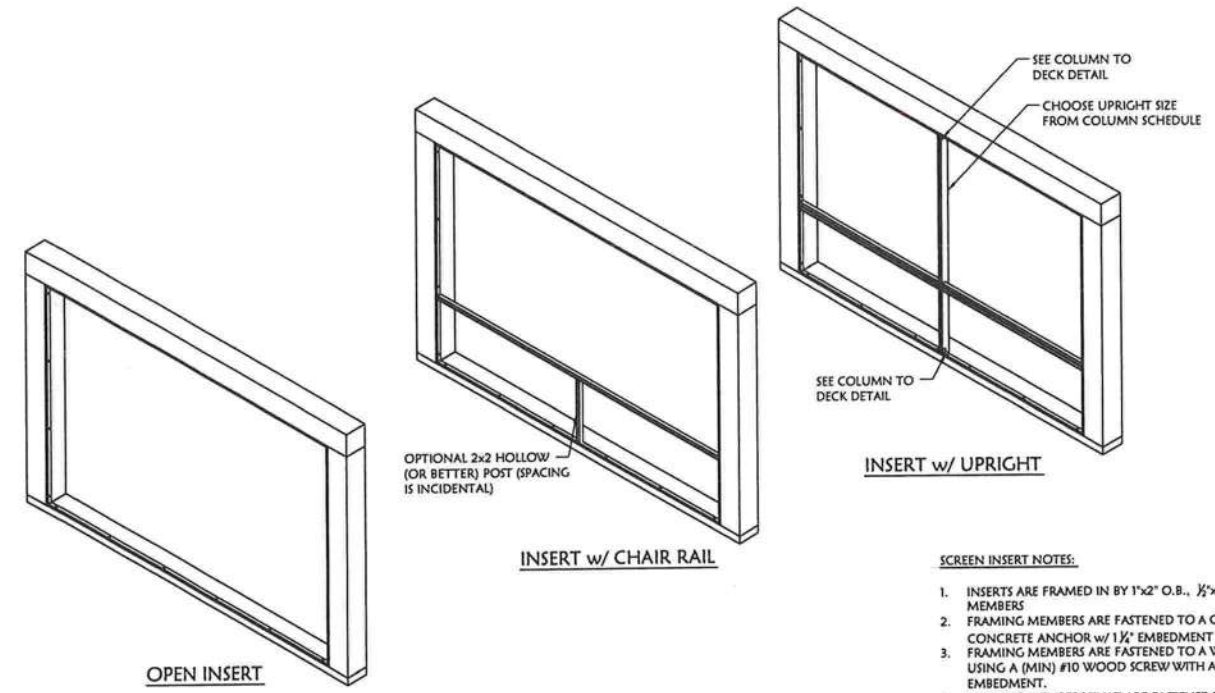

SCREEN INSERT NOTES:

1. INSERTS ARE FRAMED IN BY 1"x2" O.B., ½"x2" O.B., OR 1"x3" O.B. MEMBERS
2. FRAMING MEMBERS ARE FASTENED TO A C.M.U. USING 1/4"Ø CONCRETE ANCHOR w/ 1½" EMBEDMENT (MIN.).
3. FRAMING MEMBERS ARE FASTENED TO A WOOD FRAMED WALL USING A (MIN) #10 WOOD SCREW WITH A (MIN) 1" EMBEDMENT.
4. FRAMING MEMBERS THAT ARE FASTENED TO AN ALUMINUM FRAMED MEMBER WILL USE A (MIN) #10 S.M.S.
5. FRAMING MEMBERS ARE FASTENED @ MAX. 36" O.C., REGARDLESS OF C.M.U., WOOD, OR TO ANOTHER ALUMINUM FRAME MEMBER.
6. THERE SHALL BE A FASTENER WITHIN 4" OF EVERY 90° CORNER OR UPRIGHT IN EITHER DIRECTION BUT NOT REQUIRED TO BE IN BOTH DIRECTIONS.
7. INSERTS MAY BE AS LARGE AS DESIRED, THE TYPE OF INSERT USED IS CHOSEN BY THE DESIGNER AND IS INCIDENTAL TO STRUCTURAL INTEGRITY

2 / S-2.7 SCREEN INSERT ELEVATIONS

N.T.S.

ALUMINUM PAN (3" RISER) SPAN TABLE				
	PAN TYPE	3"x12"x0.024"	3"x12"x0.030"	3"x12"x0.050"
		EFFECTIVE SPAN (FT.)		
WIND ZONE	100	11.0	11.9	15.1
	110	10.8	11.7	13.7
	120	9.8	10.9	12.8
	123	9.5	10.8	12.6
	130	9.2	10.5	12.2

NOTE:

THE ELITE ROOF SPAN TABLES WERE PRODUCED IN ACCORDANCE WITH THE ALLOWABLE LOADS GIVEN IN THE FLORIDA PRODUCT APPROVAL OF THE ELITE ALUMINUM CORPORATION'S COMPOSITE ROOF PANEL. THE FLORIDA PRODUCT APPROVAL NUMBER FOR THIS ROOF PANEL PRODUCT IS FL-#7561-R1.

CARRY BEAM/HEADER GIRT SCHEDULE FOR COMPOSITE ROOFS ONLY												
	COMP. ROOF SPAN	4	5	6	7	8	9	10	11	12	14	16	20
		EFFECTIVE SPAN (FT.)											
BEAM SIZE	2x2 H	7.6	7.1	6.5	6.0	5.8	5.6	5.4	5.2	5.0	4.6	4.3	4.0
	2x3 H	10.7	9.9	9.1	8.4	8.2	7.8	7.5	7.3	6.9	6.4	6.0	5.6
	2x4 H	11.6	10.7	9.9	9.1	8.9	8.5	8.2	7.9	7.5	7.0	6.5	6.1
	2x5 H	14.4	13.4	12.5	12.0	11.4	11.1	10.6	10.3	9.9	9.1	8.6	8.1
	2x4 SMB	12.4	11.6	10.9	10.2	9.5	9.0	8.6	8.2	7.8	7.2	6.7	6.3
	2x5 SMB	15.4	13.2	13.5	12.5	11.7	11.0	10.5	10.0	9.5	8.9	8.3	7.8
	2x6 SMB	18.0	16.6	15.1	13.9	13.1	12.5	11.7	11.2	10.6	9.9	9.2	8.8
	2x7 SMB	20.1	17.9	16.4	15.2	14.1	13.4	12.7	12.1	11.6	10.7	10.0	9.4
	2x8 SMB	25.5	23.6	22.3	21.2	20.2	19.6	18.8	18.1	17.2	15.9	14.9	14.0
	2x9 SMB	28.0	25.9	24.5	23.3	22.1	21.0	19.8	18.9	18.0	16.8	15.6	14.8
	2x10 SMB	34.8	32.4	30.4	28.9	27.7	26.7	25.7	25.0	24.2	23.0	21.9	20.9

ELITE ALUMINUM CORPORATION COMPOSITE ROOF SPAN TABLE (#1 CORE DENSITY FOAM) [FLORIDA PRODUCT APPROVAL #FL7561-R1]							
	ROOF & SKIN THICKNESS	3"x48"x0.024"	3"x48"x0.030"	4"x48"x0.024"	4"x48"x0.030"	6"x48"x0.024"	6"x48"x0.030"
WIND ZONE & CATEGORY	100 B	21'-1"	24'-9"	23'-1"	26'-7"	28'-7"	33'-3"
	100 C, 110 B	19'-5"	22'-9"	21'-3"	24'-5"	26'-5"	30'-6"
	110 C, 120 B	18'-2"	21'-1"	19'-7"	22'-6"	24'-6"	28'-3"
	120 C, 130 B	15'-6"	19'-3"	18'-2"	20'-10"	22'-6"	26'-8"
	130 C, 140 B	12'-7"	15'-0"	14'-0"	16'-3"	17'-5"	20'-2"

ELITE ALUMINUM CORPORATION COMPOSITE ROOF SPAN TABLE (#2 CORE DENSITY FOAM) [FLORIDA PRODUCT APPROVAL #FL7561-R1]							
	ROOF & SKIN THICKNESS	3"x48"x0.024"	3"x48"x0.030"	4"x48"x0.024"	4"x48"x0.030"	6"x48"x0.024"	6"x48"x0.030"
WIND ZONE & CATEGORY	100 B	23'-1"	27'-2"	25'-4"	29'-3"	31'-6"	36'-4"
	100 C, 110 B	21'-2"	24'-11"	23'-4"	26'-11"	29'-0"	33'-5"
	110 C, 120 B	19'-7"	23'-2"	21'-8"	25'-1"	28'-6"	31'-1"
	120 C, 130 B	18'-1"	21'-2"	19'-11"	22'-9"	24'-8"	28'-3"
	130 C, 140 B	14'-0"	16'-3"	15'-3"	17'-8"	18'-3"	22'-1"

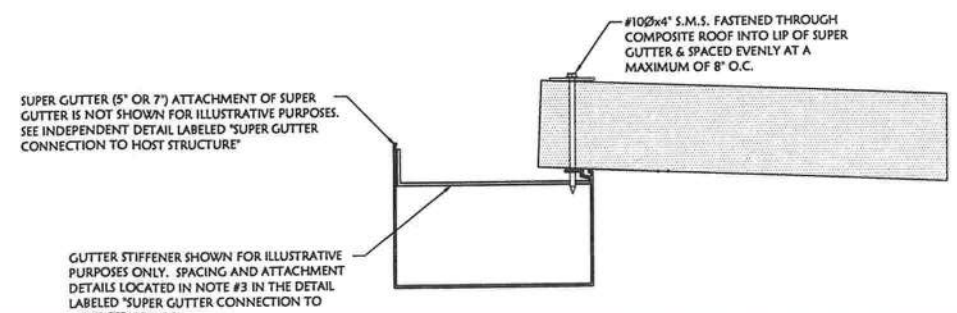

3 / S-2.7 COMPOSITE ROOF TO TOP OF SUPER GUTTER CONNECTION

N.T.S.

ROBERT C. SCROGGINS LICENSE 56158 STATE OF FLORIDA PROFESSIONAL ENGINEER
STRUCTURAL CONCEPTS & DESIGN
401 DOUGLAS AVENUE, SUITE 1305 • ALTAMONTE SPRINGS, FL 32714
TEL 407.774.3020 • FAX 407.682.0386
WWW.STRUCTURALCONCEPTSDESIGN.COM
FLORIDA C.O.A. NO: 27191

06/22/11

Robert C. Scroggins, P.E.
FL Registration No. 56158

To the best of the Design Engineer's knowledge, the plans and specifications for this project comply with the applicable minimum building codes as determined by the local authority in accordance with the Florida Statutes.

Structural Framing Sections & Details

Project: Residential Pool Screen Enclosure, Florida

Client: Florida Pool Enclosures, Inc
927 HICKORY STREET • ALTAMONTE SPRINGS, FL 32701
TEL 407.260.0800 • FAX 407.260.0041
WWW.FLORIDAPOOLENCLOSURES.COM

REV.	DATE	DESCRIPTION

JOB NO.: #11-034
DRAWN BY: TLW
CHECKED BY: RCS
APPROVED BY: RCS
DATE: 06/22/11

SHEET S-2.7

F:\Structural Server\Florida Pool Enclosures\2011 Projects\11-034 Typical Pool Screen Enclosures 06/22/11 TLW

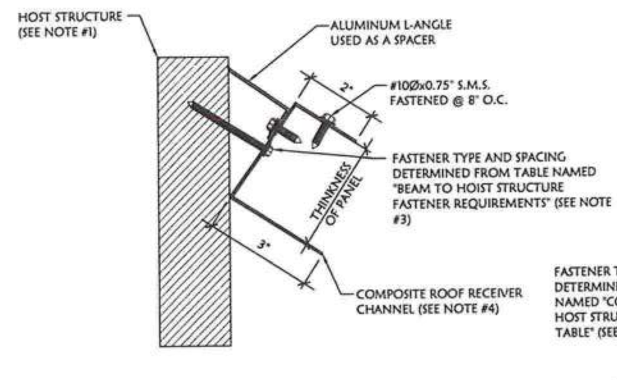

COMPOSITE ROOF TO FACE OF HOST STRUCTURE

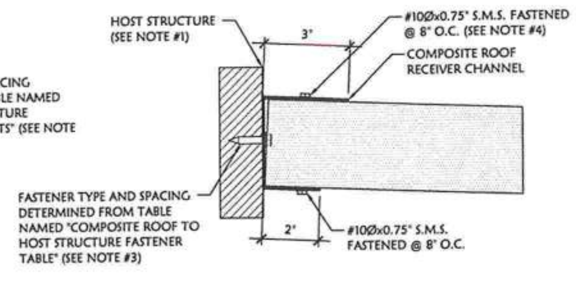

COMPOSITE ROOF TO FACE OF HOST STRUCTURE

1 / S-2.8 COMPOSITE ROOF TO HOST STRUCTURE CONNECTION

N.T.S.

COMPOSITE ROOF TO HOST STRUCTURE FASTENER REQUIREMENTS

	MAXIMUM SPACING OF SPECIFIED FASTENERS (INCHES)					
	FASTENERS TO BEAM		FASTENERS TO CMU HOST		FASTENERS TO WOOD HOST	
ROOF THK.	#10 S.M.S.	#14 S.M.S.	1/4"Ø TAPCONS	3/8"Ø TAPCONS	#10 WOOD SCREW	#14 WOOD SCREW
3"	8	12	18	24	8	12
4"	6	8	12	18	6	8
5"	4	6	8	12	4	6
6"	4	6	8	12	4	6
	N/A	N/A	1.25	1.25	1.0	1.0
	MIN. EMBEDMENT DEPTH (INCHES)					

NOTES:

1. THE TERM HOST STRUCTURE IS USED SYNONYMOUSLY WITH ANY STRUCTURAL COMPONENT THAT THE COMPOSITE ROOF CAN ATTACH TO. THIS IS INCLUDING, BUT NOT LIMITED TO, THE FACE OF A CARRY BEAM, HOUSE FASCIA, HOUSE WALL, AND THE FACE OF SUPER GUTTER.
2. THE TYPE OF FASTENER THAT IS ATTACHING TO THE HOST STRUCTURE IS TO BE DETERMINED BY THE "COMPOSITE ROOF TO HOST STRUCTURE FASTENER REQUIREMENTS".
3. SHEET METAL SCREWS AND WOOD LAG SCREWS (ONLY) THAT ATTACH INTO THE HOST STRUCTURE THROUGH THE RECEIVER CHANNEL MUST CONTAIN A 1.5" WASHER. IF A WASHER IS NOT USED, THEN THE TYPE OF FASTENERS MENTIONED IN THIS NOTE ARE TO BE DOUBLED-UP. THEY SHOULD BE INSTALLED IN A VERTICAL PATTERN, EVENLY SPACED BETWEEN THE TOP AND BOTTOM FLANGE OF THE RECEIVER CHANNEL.
4. THE FASTENERS THAT ATTACH THE COMPOSITE ROOF TO THE LONG FLANGE OF THE RECEIVER CHANNEL ARE ONLY REQUIRED WHERE THERE IS SUFFICIENT ROOM FOR INSTALLATION. FOR EXAMPLE, IF THE COMPOSITE ROOF IS INSTALLED UNDER A HOUSE OVERHANG TO THE HOUSE WALL; OR WHEN THE ROOF IS IN A STEEP PITCH AND THE BOTTOM IS INACCESSIBLE. SUFFICIENT ROOM IS DEFINED AS 24" OF SPACE BETWEEN THE TOP OF THE COMPOSITE ROOF AND THE BOTTOM OF THE OBJECT COVERING THAT AREA. ANYTHING LESS THAN THAT WOULD CONSTITUTE INSUFFICIENT ROOM AND THEREFORE NOT REQUIRE THAT THE TOP FLANGE OF THE RECEIVER CHANNEL BE FASTENED.

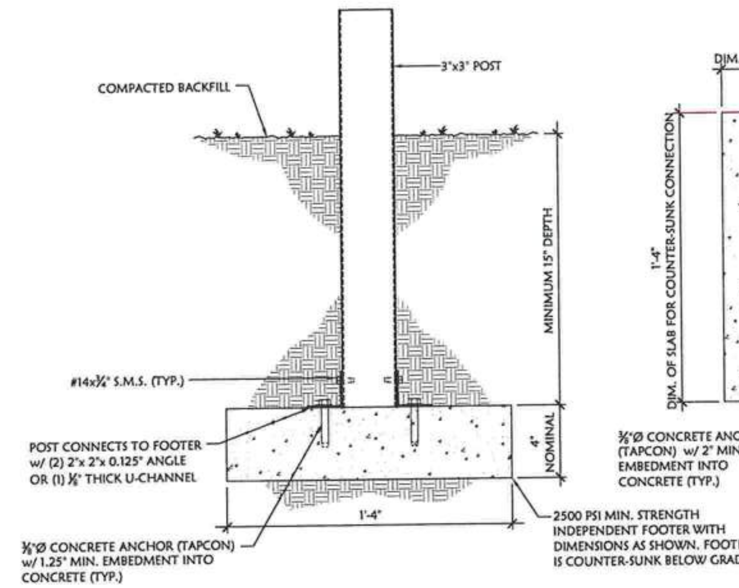

COUNTER-SUNK POST (ELEVATION)

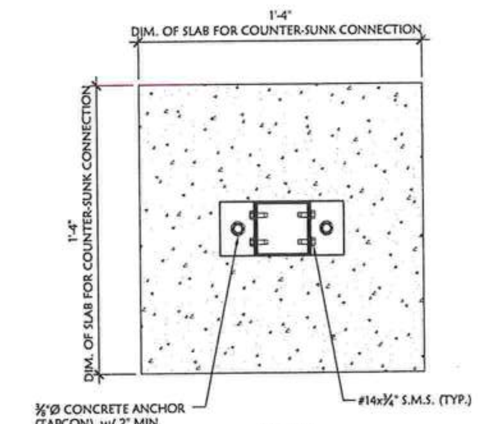

PLAN

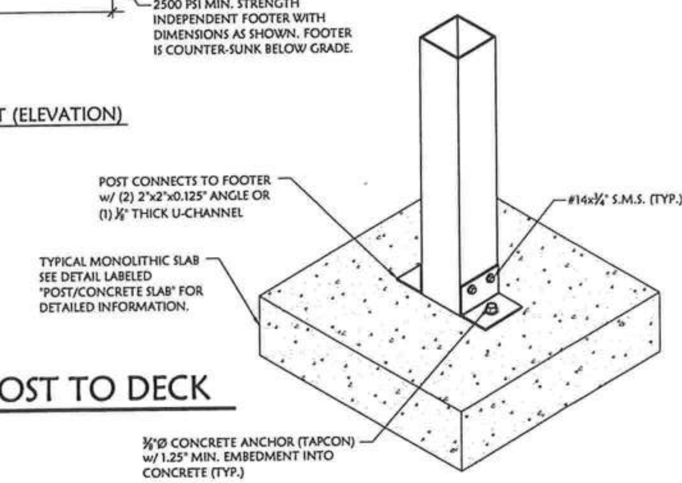

2 / S-2.8 INDEPENDENT POST TO DECK

N.T.S.

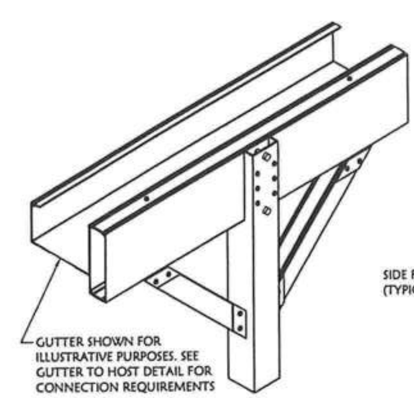

GENERAL ISOMETRIC

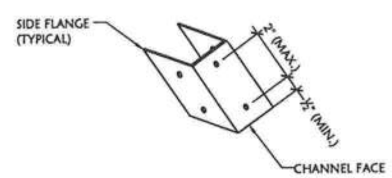

U-CHANNEL

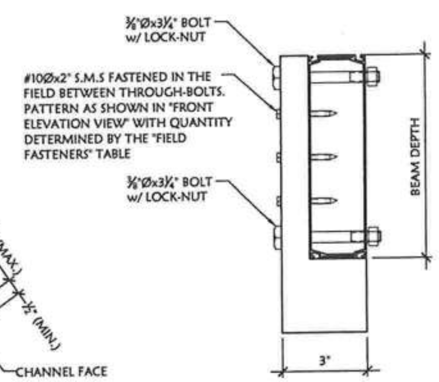

SECTION "A-A"

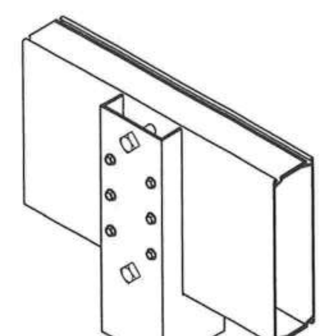

SECTION "A-A" ISOMETRIC

FIELD FASTENERS	
BEAM SIZE	QTY. OF FIELD FASTENERS
2x4	0
2x5	2
2x6	4
2x7	6
2x8	6
2x9	8
2x10	8

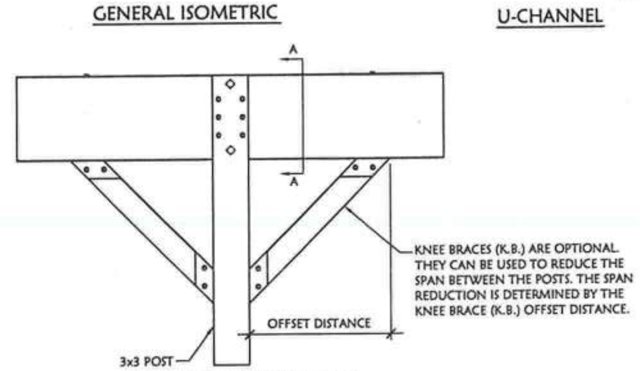

FRONT ELEVATION

NOTES:

1. THE NOTCH IN THE 3X3 POST IS SHOWN AS A SIDE NOTCH BUT A CENTERED NOTCH IS ALSO ALLOWABLE. IN THAT CASE THE FIELD FASTENERS WOULD BE REQUIRED TO BE INSTALLED ON BOTH SIDES OF THE NOTCH AND THE THROUGH BOLTS WOULD BE REQUIRED TO PENETRATE BOTH SIDES OF THE NOTCH THROUGH THE BEAM.
2. THE (OPTIONAL) KNEE BRACES ARE SHOWN BEING ATTACHED WITH U-CHANNEL BUT H-CHANNEL IS ALSO ACCEPTABLE. THE SIZE OF THE KNEE BRACE AND THE QUANTITY OF FASTENERS IS GIVEN IN THE "KNEE BRACE SCHEDULE".
3. HEIGHT AND TYPE OF 3X3 POST IS DETERMINED BY THE APPROPRIATE TABLES CALLED "COLUMN SCHEDULE FOR SOLID ROOF / SCREEN ENCLOSURE COMBO". IN THE EVENT THAT THERE IS NO SOLID ROOF OR NO SCREEN ENCLOSURE THEN TAKE THE MINIMUM SPAN GIVEN IN THE TABLE FOR THE NON-EXISTENT COMPONENT.

KNEE BRACE SCHEDULE		
SIZE	LENGTH	QTY. PER FLANGE
2x2x0.044	UP TO 2'-0"	2
2x3x0.050	2'-0" TO 4'-0"	3
2x4x0.050	4'-0" TO 6'-0"	4
2x4x0.048 x 0.100 SMB	6'-0" TO 7'-0"	4
2x6x0.050 x 0.120 SMB	7'-0" TO 8'-0"	6

3 / S-2.8 INDEPENDENT POST TO BEAM CONNECTION

N.T.S.

ROBERT C. SCROGGINS LICENSE No. 56158 STATE OF FLORIDA PROFESSIONAL ENGINEER

STRUCTURAL CONCEPTS & DESIGN
405 DOUGLAS AVENUE, SUITE 1305 • ALTAMONTE SPRINGS, FL 32714
TEL 407/774-3028 • FAX 407/682-2386
WWW.STRUCTURALCONCEPTSDESIGN.COM
FLORIDA C.O.A. NO. 27191

06/22/11
Robert C. Scroggins, P.E.
FL Registration No. 56158

To the best of the Design Engineer's knowledge, the plans and specifications for this project comply with the applicable minimum building codes as determined by the local authority in accordance with the Florida Statutes.

REV.	DATE	DESCRIPTION

Client: Florida Pool Enclosures, Inc
927 HICKORY STREET • ALTAMONTE SPRINGS, FL 32701
TEL 407/260-2800 • FAX 407/260-6481
WWW.FLORIDAPOOLENCLOSURES.COM

Project: Residential Pool Screen Enclosure
________, Florida

Structural Framing
Sections & Details

JOB NO.:	#11-034
DRAWN BY:	TLW
CHECKED BY:	RCS
APPROVED BY:	RCS
DATE:	06/22/11

SHEET S-2.8

F:\Structural Server\Florida Pool Enclosures\2011 Projects\11-034 Typical Pool Screen Enclosures 06/22/11 TLW

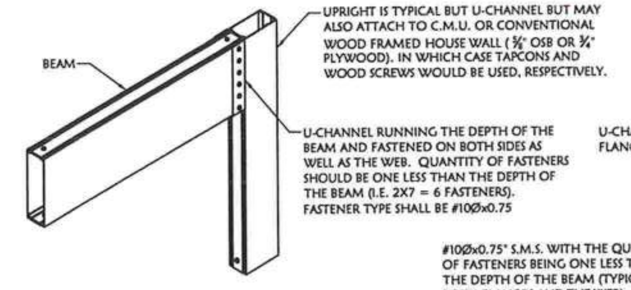

STANDARD BEAM TO U-CHANNEL CONNECTION
(SHOWN FROM ISOMETRIC TOP)

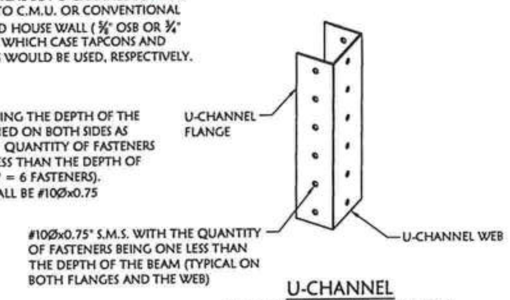

U-CHANNEL
(ISOMETRIC FOR CLARITY)

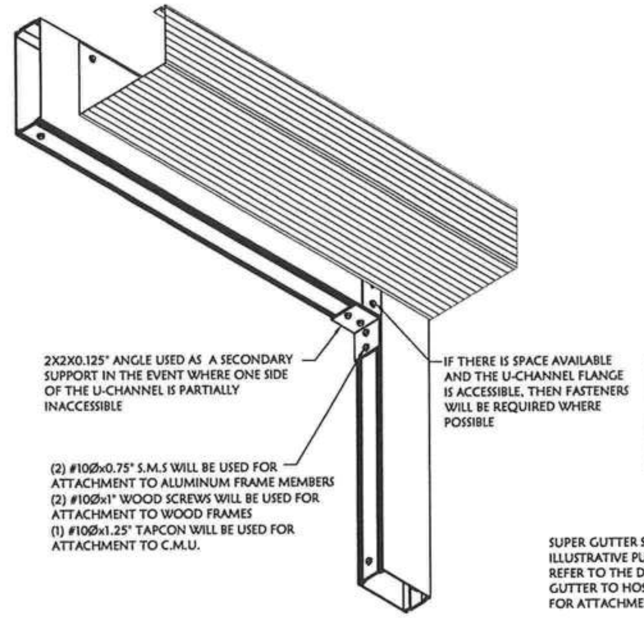

BEAM TO U-CHANNEL w/ GUTTER
(SHOWN FROM ISOMETRIC BOTTOM)

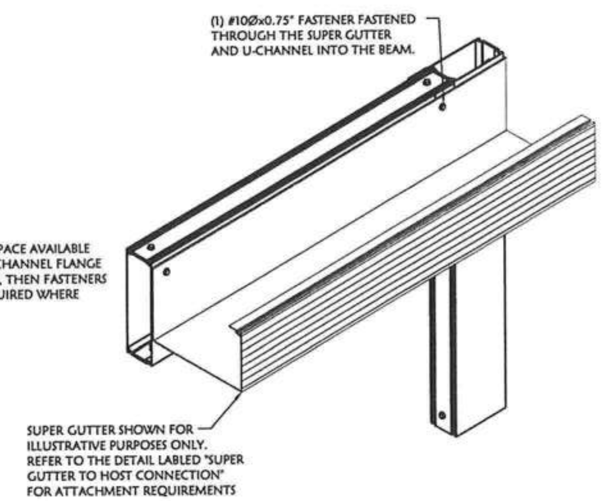

BEAM TO U-CHANNEL w/ GUTTER
(SHOWN FROM ISOMETRIC TOP)

1 / S-2.9 BEAM TO U-CHANNEL CONNECTION

N.T.S.

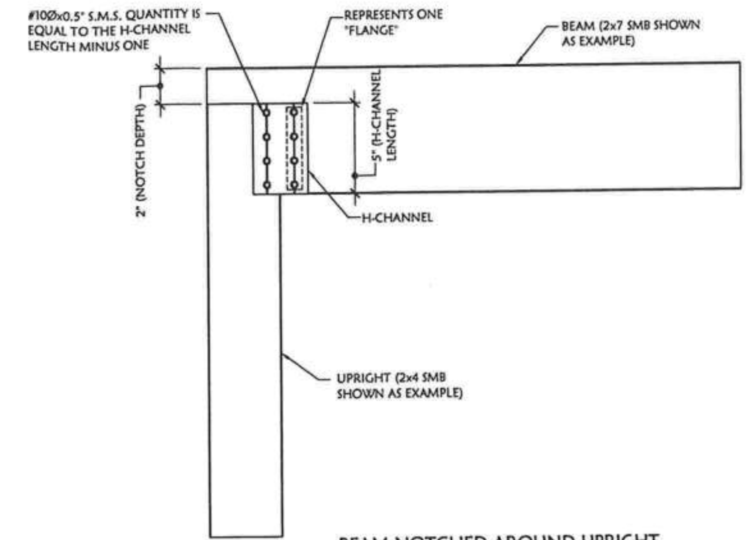

BEAM NOTCHED AROUND UPRIGHT

NOTES:

1. H-CHANNEL LENGTH WILL BE EQUAL TO THE BEAM LENGTH MINUS THE NOTCH DEPTH.
2. KNEE BRACES MAY BE USED IN ADDITION TO THIS CONNECTION BUT ARE OPTIONAL. FOR INFORMATION ABOUT A KNEE BRACE CONNECTION, PLEASE SEE THE DETAIL LABELED "KNEE BRACE CONNECTION".
3. QUANTITY OF SCREWS ON EACH FLANGE MUST BE EQUAL TO THE H-CHANNEL LENGTH MINUS ONE (AS SHOWN IN THE DETAIL).
4. FASTENERS IN H-CHANNEL MAY BE #14Øx0.5" ALSO.
5. ANY COMBINATION OF FRAME MEMBERS FOR THE UPRIGHT AND BEAM MAY BE USED PROVIDED THEY ARE IN THE BEAM SCHEDULE AND UPRIGHT SCHEDULE RESPECTIVELY.
6. H-CHANNEL CONFIGURATION AND FRAME-NOTCH SHOWN IS IN A VERTICAL VECTOR WITH THE BEAM BEING NOTCHED. THE VECTOR MAY ALSO BE HORIZONTAL WITH THE UPRIGHT NOTCHED ONLY IF THE UPRIGHT DEPTH IS LARGER THAN THE BEAM DEPTH.
7. AN OPTIONAL 2x2x0.125 ANGLE MAY BE USED IN CASES WHERE ONE SIDE OF THE BEAM IS INACCESSIBLE. SEE NOTE #6 IN THE DETAIL BELOW LABELED "BEAM TO FACE OF UPRIGHT".

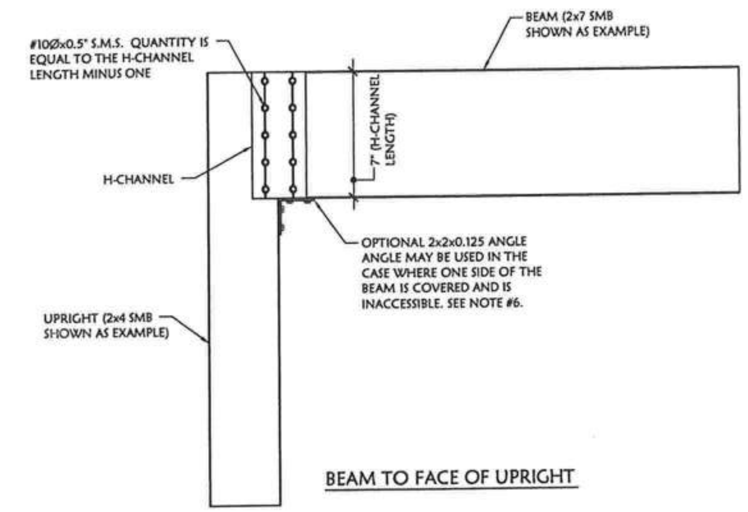

BEAM TO FACE OF UPRIGHT

NOTES:

1. KNEE BRACES MAY BE USED IN ADDITION TO THIS CONNECTION BUT ARE OPTIONAL. FOR INFORMATION ABOUT A KNEE BRACE CONNECTION, PLEASE SEE THE DETAIL LABELED "KNEE BRACE CONNECTION".
2. QUANTITY OF SCREWS ON EACH FLANGE MUST BE EQUAL TO THE H-CHANNEL LENGTH MINUS ONE (AS SHOWN IN THE DETAIL).
3. FASTENERS IN H-CHANNEL MAY BE #14Øx0.5" ALSO
4. ANY COMBINATION OF FRAME MEMBERS FOR THE UPRIGHT AND BEAM MAY BE USED PROVIDED THEY ARE IN THE BEAM SCHEDULE AND UPRIGHT SCHEDULE RESPECTIVELY.
5. THE CONFIGURATION SHOWN IS THE BEAM BUTTING INTO THE UPRIGHT WITH THE H-CHANNEL "LENGTH" BEING DRIVEN BY THE BEAM DEPTH. THIS CONFIGURATION MAY BE SWITCHED TO HAVE THE UPRIGHT BUTTING INTO THE BOTTOM OF THE BEAM AND THE H-CHANNEL "LENGTH" BEING DRIVEN BY THE UPRIGHT DEPTH.
6. THE 2x2x0.125 ANGLE IS USED IN LIEU OF ONE INACCESSIBLE SIDE OF BEAM. (2) #10Øx0.75 FASTENERS SHOULD BE USED ON EACH FLANGE OF THE ANGLE BRACKET. IF THE INACCESSIBLE SIDE IS ONLY PARTIALLY COVERED, THEN FASTENERS SHOULD BE INSTALLED WHERE POSSIBLE.

2 / S-2.9 BEAM TO UPRIGHT (H-CHANNEL) CONNECTION

N.T.S.

ROBERT C. SCROGGINS LICENSE No. 56158 STATE OF FLORIDA PROFESSIONAL ENGINEER
STRUCTURAL CONCEPTS & DESIGN
405 DOUGLAS AVENUE, SUITE 1305 • ALTAMONTE SPRINGS, FL 32714
TEL 407/774-3028 • FAX 407/862-2386
WWW.STRUCTURALCONCEPTSDESIGN.COM
FLORIDA C.O.A. NO. 27191
06/22/11
Robert C. Scroggins, P.E.
FL Registration No. 56158

To the best of the Design Engineer's knowledge, the plans and specifications for this project comply with the applicable minimum building codes as determined by the local authority in accordance with the Florida Statutes.

JOB NO.:	#11-034
DRAWN BY:	TLW
CHECKED BY:	RCS
APPROVED BY:	RCS
DATE:	06/22/11
SHEET	S-2.9

REV.	DATE	DESCRIPTION

Client: Florida Pool Enclosures, Inc
927 HICKORY STREET • ALTAMONTE SPRINGS, FL 32701
TEL 407/260-2800 • FAX 407/260-6461
WWW.FLORIDAPOOLCLOSURES.COM

Project: Residential Pool Screen Enclosure
_______________, Florida

Structural Framing
Sections & Details

F:\Structural Server\Florida Pool Enclosures\2011 Projects\11-034 Typical Pool Screen Enclosures 06/22/11 TLW

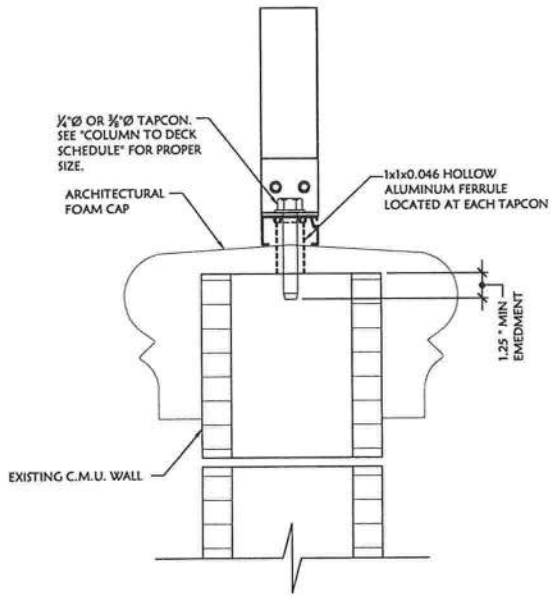

SECTION "A-A"

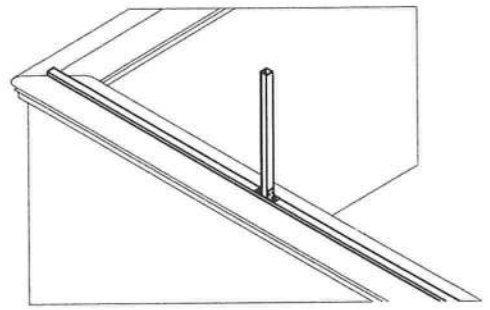

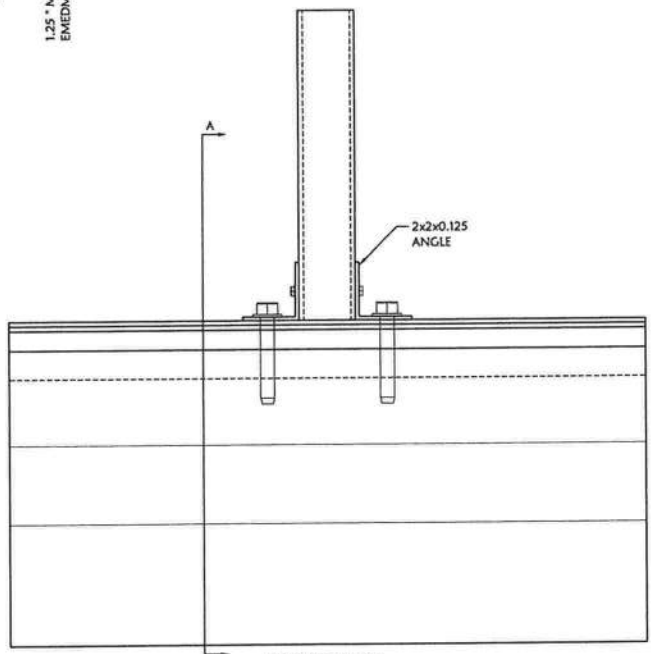

FRONT VIEW

NOTES:

1. TAPCONS IN BETWEEN EACH UPRIGHT MAY BE SPACED AT 36" O.C. (MAX) WITH A 1x1x0.046 HOLLOW ALUMINUM FERRULE SUPPORT (AS SHOWN IN THE DETAIL).

1 / S-2.10 SCREEN ENCLOSURE BASE ATTACHMENT TO FOAM CAPPED WALL

N.T.S.

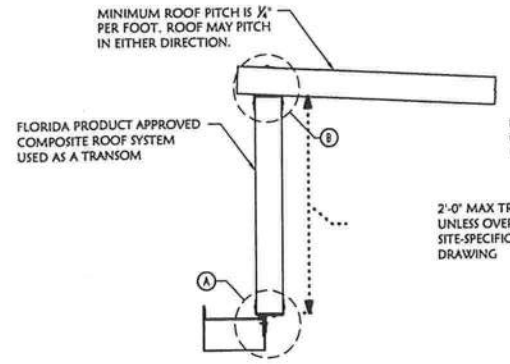

SIDE ELEVATION

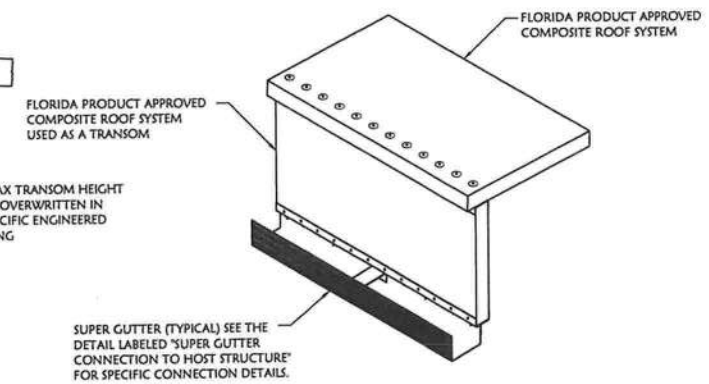

TOP ISOMETRIC VIEW

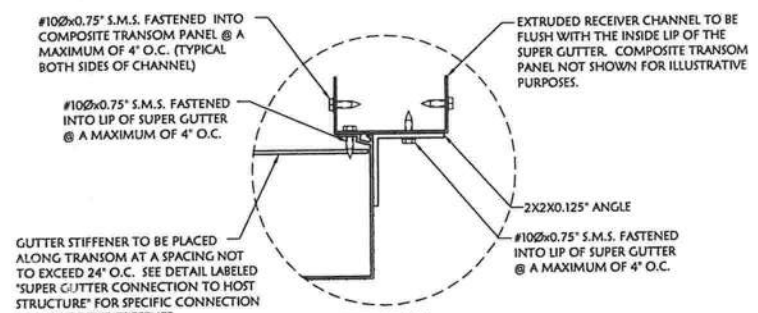

DETAIL "A"

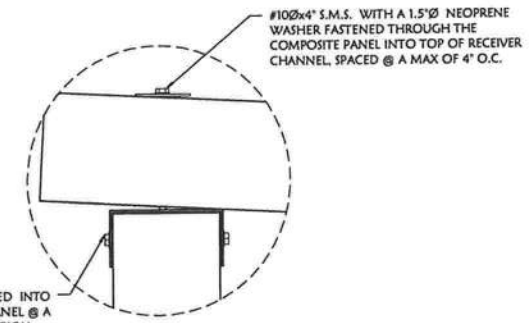

DETAIL "B"

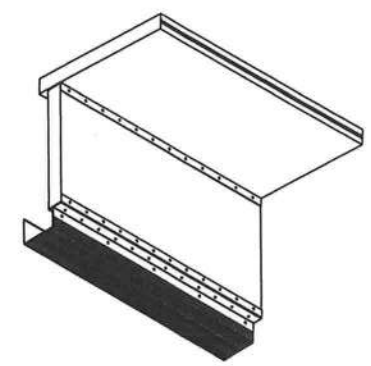

BOTTOM ISOMETRIC VIEW

2 / S-2.10 COMPOSITE PANEL TRANSOM DETAIL

N.T.S.

ROBERT C. SCROGGINS LICENSE No. 56158 STATE OF FLORIDA PROFESSIONAL ENGINEER

STRUCTURAL CONCEPTS & DESIGN

405 DOUGLAS AVENUE, SUITE 1305 • ALTAMONTE SPRINGS, FL. 32714
TEL 407.774.3028 • FAX 407.862.2184
WWW.STRUCTURALCONCEPTSDESIGN.COM
(FLORIDA C.O.A. NO. 27791)

06/22/11

Robert C. Scroggins, P.E.
FL Registration No. 56158

To the best of the Design Engineer's knowledge, the plans and specifications for this project comply with the applicable minimum building codes as determined by the local authority in accordance with the Florida Statutes.

Structural Framing Sections & Details

Project: Residential Pool Screen Enclosure, Florida

Client: Florida Pool Enclosures, Inc

927 HICKORY STREET • ALTAMONTE SPRINGS, FL. 32701
TEL 407.260.2800 • FAX 407.260.0401
WWW.FLORIDAPOOLENCLOSURES.COM

REV.	DATE	DESCRIPTION

JOB NO.:	#11-034
DRAWN BY:	TLW
CHECKED BY:	RCS
APPROVED BY:	RCS
DATE:	06/22/11

SHEET S-2.10

F:\Structural Server\Florida Pool Enclosures\2011 Projects\11-034 Typical Pool Screen Enclosures 06/22/11 TLW

Columbia County Building Permit Application

TIME LIMITATIONS OF APPLICATION : An application for a permit for any proposed work shall be deemed to have been abandoned 180 days after the date of filing, unless such application has been pursued in good faith or a permit has been issued; except that the building official is authorized to grant one or more extensions of time for additional periods not exceeding 90 days each. The extension shall be requested in writing and justifiable cause demonstrated.

TIME LIMITATIONS OF PERMITS: Every permit issued shall become invalid unless the work authorized by such permit is commenced within 180 days after its issuance, or if the work authorized by such permit is suspended or abandoned for a period of 180 days after the time work is commenced. A valid permit receives an approved inspection every 180 days. Work shall be considered not suspended, abandoned or invalid when the permit has received an approved inspection within 180 days of the previous approved inspection.

FLORIDA'S CONSTRUCTION LIEN LAW: Protect Yourself and Your Investment: According to Florida Law, those who work on your property or provide materials, and are not paid-in-full, have a right to enforce their claim for payment against your property. This claim is known as a construction lien. If your contractor fails to pay subcontractors or material suppliers or neglects to make other legally required payments, the people who are owed money may look to your property for payment, even if you have paid your contractor in full.
This means if a lien is filed against your property, it could be sold against your will to pay for labor, materials or other services which your contractor may have failed to pay.

NOTICE OF RESPONSIBILITY TO BUILDING PERMITEE: ***YOU ARE HEREBY NOTIFIED*** as the recipient of a building permit from Columbia County, Florida, you will be held responsible to the County for any damage to sidewalks and/or road curbs and gutters, concrete features and structures, together with damage to drainage facilities, removal of sod, major changes to lot grades that result in ponding of water, or other damage to roadway and other public infrastructure facilities caused by you or your contractor, subcontractors, agents or representatives in the construction and/or improvement of the building and lot for which this permit is issued. No certificate of occupancy will be issued until all corrective work to these public infrastructures and facilities has been corrected.

WARNING TO OWNER: YOUR FAILURE TO RECORD A NOTICE OF COMMENCMENT MAY RESULT IN YOU PAYING TWICE FOR IMPROVEMENTS TO YOUR PROPERTY. A NOTICE OF COMMENCEMENT MUST BE RECORDED AND POSTED ON THE JOB SITE BEFORE THE FIRST INSPECTION. IF YOU INTEND TO OBTAIN FINANCING, CONSULT WITH YOUR LENDER OR ATTORNEY BEFORE RECORDING YOUR NOTICE OF COMMENCEMENT.

OWNERS CERTIFICATION: I CERTIFY THAT ALL THE FOREGOING INFORMATION IS ACCURATE AND THAT ALL WORK WILL BE DONE IN COMPLIANCE WITH ALL APPLICABLE LAWS REGULATING CONSTRUCTION AND ZONING.

NOTICE TO OWNER: There are some properties that may have deed restrictions recorded upon them. These restrictions may limit or prohibit the work applied for in your building permit. You must verify if your property is encumbered by any restrictions or face possible litigation and or fines.

(Owners Must Sign All Applications Before Permit Issuance.)

X Barry T. Wells
Owners Signature ****OWNER BUILDERS MUST PERSONALLY APPEAR AND SIGN THE BUILDING PERMIT.**

CONTRACTORS AFFIDAVIT: By my signature I understand and agree that I have informed and provided this written statement to the owner of all the above written responsibilities in Columbia County for obtaining this Building Permit including all application and permit time limitations.

Contractor's Signature (Permitee)

Contractor's License Number SCC056689
Columbia County
Competency Card Number 442

Affirmed under penalty of perjury to by the Contractor and subscribed before me this 1st **day of** July **20**11.

Personally known ✓ **or Produced Identification** _____

State of Florida Notary Signature (For the Contractor)

SEAL:

Nadean G. S. McIntosh
Commission DD 826261
Expires November 14, 2012
Bonded Thru Troy Fain Insurance 800-385-7019

NOTICE OF COMMENCEMENT

Tax Parcel Identification Number:

Clerk's Office Stamp

Inst:201112010061 Date:7/5/2011 Time:10:21 AM
DC,P.DeWitt Cason,Columbia County Page 1 of 1 B:1217 P:972

THE UNDERSIGNED hereby gives notice that improvements will be made to certain real property, and in accordance with Section 713.13 of the Florida Statutes. the following information is provided in this **NOTICE OF COMMENCEMENT.**

1. Description of property *(legal description)*: Lots 35+36 Spring Hollow S/D OR 820-1064
   a) Street *(job)* Address: 650 NW Spring Hollow Blvd Lake City, Fl 32055
2. General description of improvements: Pool Enclosure
3. Owner Information
   a) Name and address: Webb, Barry T
   b) Name and address of fee simple titleholder (if other than owner)
   c) Interest in property Owner
4. Contractor Information
   a) Name and address: Mike DelaHoz 289 NW Corinth Dr Lake City Fl
   b) Telephone No.: 386-754-8678 Fax No. (Opt.)
5. Surety Information
   a) Name and address: n/a
   b) Amount of Bond:
   c) Telephone No.: Fax No. (Opt.)
6. Lender
   a) Name and address: n/a
   b) Phone No.
7. Identity of person within the State of Florida designated by owner upon whom notices or other documents may be served:
   a) Name and address:
   b) Telephone No.: Fax No. (Opt.)
8. In addition to himself, owner designates the following person to receive a copy of the Lienor's Notice as provided in Section 713.13(l)(b), Florida Statutes:
   a) Name and address: Florida Pool Enclosures Inc 289 NW Corinth Dr LC
   b) Telephone No.: 386-754-8678 Fax No. (Opt.)
9. Expiration date of Notice of Commencement **(the expiration date is one year from the date of recording unless a different date is specified):**

WARNING TO OWNER: ANY PAYMENTS MADE BY THE OWNER AFTER THE EXPIRATION OF THE NOTICE OF COMMENCEMENT ARE CONSIDERED IMPROPER PAYMENTS UNDER CHAPTER 713, PART I, SECTION 713.13, FLORIDA STATUTES, AND CAN RESULT IN YOUR PAYING TWICE FOR IMPROVEMENTS TO YOUR PROPERTY; A NOTICE OF COMMENCEMENT MUST BE RECORDED AND POSTED ON THE JOB SITE BEFORE THE FIRST INSPECTION. IF YOU INTEND TO OBTAIN FINANCING, CONSULT YOUR LENDER OR AN ATTORNEY BEFORE COMMENCING WORK OR RECORDING YOUR NOTICE OF COMMENCEMENT.

STATE OF FLORIDA
COUNTY OF COLUMBIA

10. Barry T. Webb
Signature of Owner or Owner's Authorized Office/Director/Partner/Manager

Barry T Webb
Printed Name

The foregoing instrument was acknowledged before me , a Florida Notary, this 16th day of June, 2011, by:

as **(type of authority, e.g. officer, trustee, attorney fact) for** **(name of party on behalf of whom instrument was executed).**

Personally Known ____ OR Produced Identification ✓ Type Photo

Notary Signature Nadean G. S. McIntosh

Notary Stamp or Seal: Nadean G. S. McIntosh
Commission DD 826261
Expires November 14, 2012
Bonded Thru Troy Fain Insurance 800-385-7019

—AND—

11. Verification pursuant to Section 92.525, Florida Statutes. Under penalties of perjury, I declare that I have read the foregoing and that the facts stated in it are true to the best of my knowledge and belief.

Signature of Natural Person Signing (in line #10 above.)

7:51:06 AM 7/11/2011

Licensee Details

Licensee Information

Name:	**SCROGGINS, ROBERT CHRISTOPHER** (Primary Name)
	(DBA Name)
Main Address:	**405 DOUGLAS AVE, SUITE 1305** **ALTAMONTE SPRINGS Florida 32714**
County:	**SEMINOLE**
License Mailing:	**405 DOUGLAS AVENUE** **SUITE 1305** **ALTAMONTE SPRINGS FL 32714**
County:	**SEMINOLE**
LicenseLocation:	

License Information

License Type:	**Professional Engineer**
Rank:	**Prof Engineer**
License Number:	**56158**
Status:	**Current,Active**
Licensure Date:	**07/25/2000**
Expires:	**02/28/2013**

Special Qualifications	**Qualification Effective**
Building Code Core Course Credit	

View Related License Information

View License Complaint

Contact Us :: 1940 North Monroe Street, Tallahassee FL 32399 :: Call.Center@dbpr.state.fl.us :: Customer Contact Center: 850.487.1395

The State of Florida is an AA/EEO employer. Copyright 2007-2010 State of Florida. Privacy Statement

Under Florida law, e-mail addresses are public records. If you do not want your e-mail address released in response to a public-records request, do not send electronic mail to this entity. Instead, contact the office by phone or by traditional mail. If you have any questions regarding DBPR's ADA web accessibility, please contact our Web Master at webmaster@dbpr.state.fl.us.

Columbia County Property Appraiser

DB Last Updated: 5/3/2011

2010 Tax Year

Parcel: 24-3S-16-02273-029

Tax Collector | Tax Estimator | Property Card | Parcel List Generator

<< Next Lower Parcel | Next Higher Parcel >> | Interactive GIS Map | Print

Search Result: 1 of 1

Owner & Property Info

Owner's Name	WEBB BARRY T		
Mailing Address	650 NW SPRING HOLLOW BLVD LAKE CITY, FL 32055		
Site Address	650 NW SPRING HOLLOW BLVD		
Use Desc. (code)	SINGLE FAM (000100)		
Tax District	2 (County)	**Neighborhood**	24316
Land Area	0.000 ACRES	**Market Area**	06
Description	NOTE: This description is not to be used as the Legal Description for this parcel in any legal transaction.		
LOTS 35 & 36 SPRING HOLLOW S/D ORB 820-1064, 830-660, 957-975, WD 1170-2091			

Property & Assessment Values

2010 Certified Values		
Mkt Land Value	cnt: (0)	$32,400.00
Ag Land Value	cnt: (1)	$0.00
Building Value	cnt: (1)	$111,187.00
XFOB Value	cnt: (5)	$13,583.00
Total Appraised Value		$157,170.00
Just Value		$157,170.00
Class Value		$0.00
Assessed Value		$67,079.00
Exempt Value	(code: HX)	$42,079.00
Total Taxable Value		Cnty: $25,000 Other: $25,000 | Schl: $42,079

2011 Working Values

NOTE:
2011 Working Values are NOT certified values and therefore are subject to change before being finalized for ad valorem assessment purposes.

Show Working Values

Sales History

Show Similar Sales within 1/2 mile

Sale Date	OR Book/Page	OR Code	Vacant / Improved	Qualified Sale	Sale RCode	Sale Price
4/6/2009	1170/2091	WD	I	Q	01	$205,000.00
7/8/2002	957/975	WD	I	Q		$132,000.00
10/30/1996	830/660	WD	I	Q		$124,500.00
4/12/1996	820/1064	WD	I	Q		$116,000.00
3/1/1986	588/240	WF	V	U	01	$11,500.00

Building Characteristics

Bldg Item	Bldg Desc	Year Blt	Ext. Walls	Heated S.F.	Actual S.F.	Bldg Value
1	SINGLE FAM (000100)	1987	COMMON BRK (19)	1695	2650	$100,615.00
	Note: All S.F. calculations are based on exterior building dimensions.					

Extra Features & Out Buildings

Code	Desc	Year Blt	Value	Units	Dims	Condition (% Good)
0166	CONC,PAVMT	0	$3,500.00	0000001.000	0 x 0 x 0	(000.00)
0180	FPLC 1STRY	0	$2,000.00	0000001.000	0 x 0 x 0	(000.00)
0280	POOL R/CON	1989	$6,758.00	0000512.000	32 x 16 x 0	(000.00)
0120	CLFENCE 4	1993	$825.00	0000330.000	0 x 0 x 0	(000.00)
0296	SHED METAL	2009	$500.00	0000001.000	0 x 0 x 0	(000.00)

Land Breakdown

Lnd Code	Desc	Units	Adjustments	Eff Rate	Lnd Value
000100	SFR (MKT)	2 LT - (0000000.000AC)	1.00/1.00/1.00/1.00	$16,200.00	$32,400.00

Columbia County Property Appraiser DB Last Updated: 5/3/2011

Columbia County Property Appraiser

J. Doyle Crews - Lake City, Florida 32055 | 386-758-1083

PARCEL: 24-3S-16-02273-029 - SINGLE FAM (000100)

LOTS 35 & 36 SPRING HOLLOW S/D ORB 820-1064, 830-660, 957-975, WD 1170-2091

Name: WEBB BARRY T

Site: 650 NW SPRING HOLLOW BLVD

Mail: 650 NW SPRING HOLLOW BLVD
LAKE CITY, FL 32055

Sales Info			
4/6/2009	$205,000.00	I / Q	
7/8/2002	$132,000.00	I / Q	

2010 Certified Values

Land	$32,400.00
Bldg	$111,187.00
Assd	$67,079.00
Exmpt	$42,079.00
Taxbl	Cnty: $25,000 Other: $25,000 | Schl: $42,079

NOTES:

This information,GIS Map Updated: 5/3/2011, was derived from data which was compiled by the Columbia County Property Appraiser Office solely for the governmental purpose of property assessment. This information should not be relied upon by anyone as a determination of the ownership of property or market value. No warranties, expressed or implied, are provided for the accuracy of the data herein, it's use, or it's interpretation. Although it is periodically updated, this information may not reflect the data currently on file in the Property Appraiser's office. The assessed values are NOT certified values and therefore are subject to change before being finalized for ad valorem assessment purposes.

powered by: GrizzlyLogic.com

Webb

COLUMBIA COUNTY BUILDING DEPARTMENT
Received for
FILE COPY
Code Compliance
PLANS EXAMINER

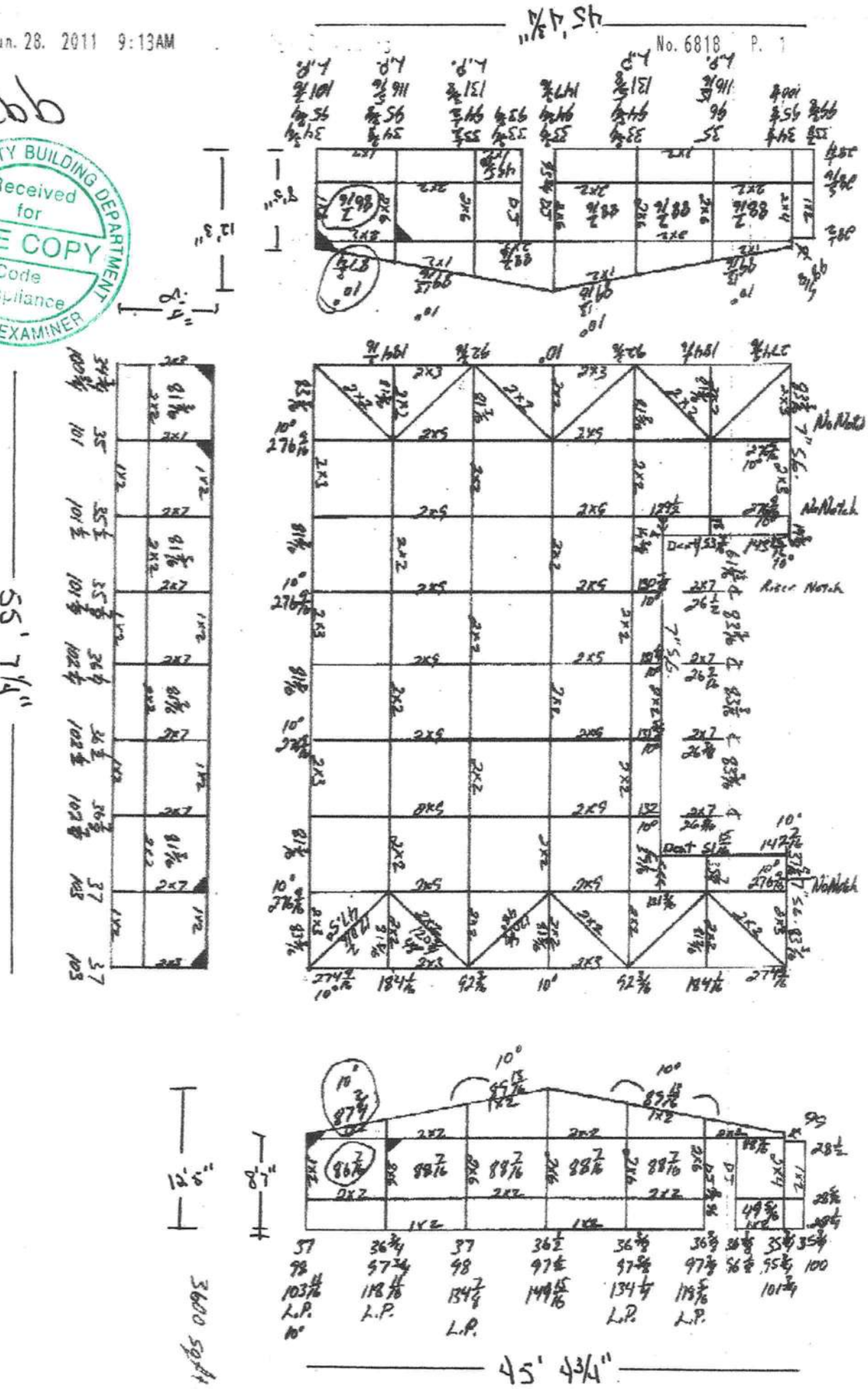

- CK# 4071 -

Columbia County Building Permit Application #442 ☑ CURRENT

For Office Use Only	Application # 1107-02	Date Received 7/5/11	By LH	Permit # 29531	
Zoning Official BLK	Date 11 July 2011	Flood Zone N/A	Land Use Res Low Dev	Zoning RSF-2	
FEMA Map # N/A	Elevation N/A	MFE N/A	River N/A	Plans Examiner T.C.	Date 7-11-11

Comments Accessory Use

☑ NOC ☑ EH ☑ Deed or PA ☑ Site Plan ☑ State Road Info ☑ Well letter ☑ 911 Sheet □ Parent Parcel # ____

□ Dev Permit # ____ □ In Floodway ☑ Letter of Auth. from Contractor ☑ F W Comp. letter

IMPACT FEES: EMS ____ Fire ____ Corr ____ ☑ Sub VF Form

Road/Code ____ School ____ = TOTAL (Suspended) ☑ App Fee Paid

Septic Permit No. N/A Fax 386-755-1751

Name Authorized Person Signing Permit ~~Robert~~ Nadeau McIntosh Phone 386-754-8678

Address 289 NW Corinth Dr Lake City, Fl 32055

Owners Name Webb, Barry T Phone ____

911 Address 650 NW Spring Hollow Blvd, Lake City, Fl 32055

Contractors Name Michael DelaHoz Phone 386-754-8678

Address 927 Hickory St Altamonte Springs, F 32701

Fee Simple Owner Name & Address N/A

Bonding Co. Name & Address N/A

Architect/Engineer Name & Address ____

Mortgage Lenders Name & Address N/A

Circle the correct power company – FL Power & Light – Clay Elec. – (Suwannee Valley Elec.) – Progress Energy

Property ID Number 24-3S-16-02273-029 Estimated Cost of Construction 12,900.00

Subdivision Name Spring Hollow Lot 35+36 Block ____ Unit ____ Phase ____

Driving Directions [illegible], Right on Lake Jeffery Rd, Right on Spring Hollow Blvd (Spring Hollow S/D), House is on left at end.

____ Number of Existing Dwellings on Property 1

Construction of Pool Enclosure Total Acreage ____ Lot Size 250' x 176'

Do you need a - Culvert Permit or Culvert Waiver or ~~Have an Existing Drive~~ Total Building Height ____

Actual Distance of Structure from Property Lines - Front 87' Side 73' Side 92' Rear 28'

Number of Stories 1 Heated Floor Area — Total Floor Area — Roof Pitch —

Application is hereby made to obtain a permit to do work and installations as indicated. I certify that no work or installation has commenced prior to the issuance of a permit and that all work be performed to meet the standards of all laws regulating construction in this jurisdiction. **CODE:** Florida Building Code 2007 with 2009 Supplements and the 2008 National Electrical Code.

JW spoke w/ BEE on 7.11.11

Received Time Mar. 10. 2:09PM

BOUNDARY SURVEY IN SECTION 24, TOWNSHIP 3 SOUTH, RANGE 16 EAST, COLUMBIA COUNTY, FLORIDA.

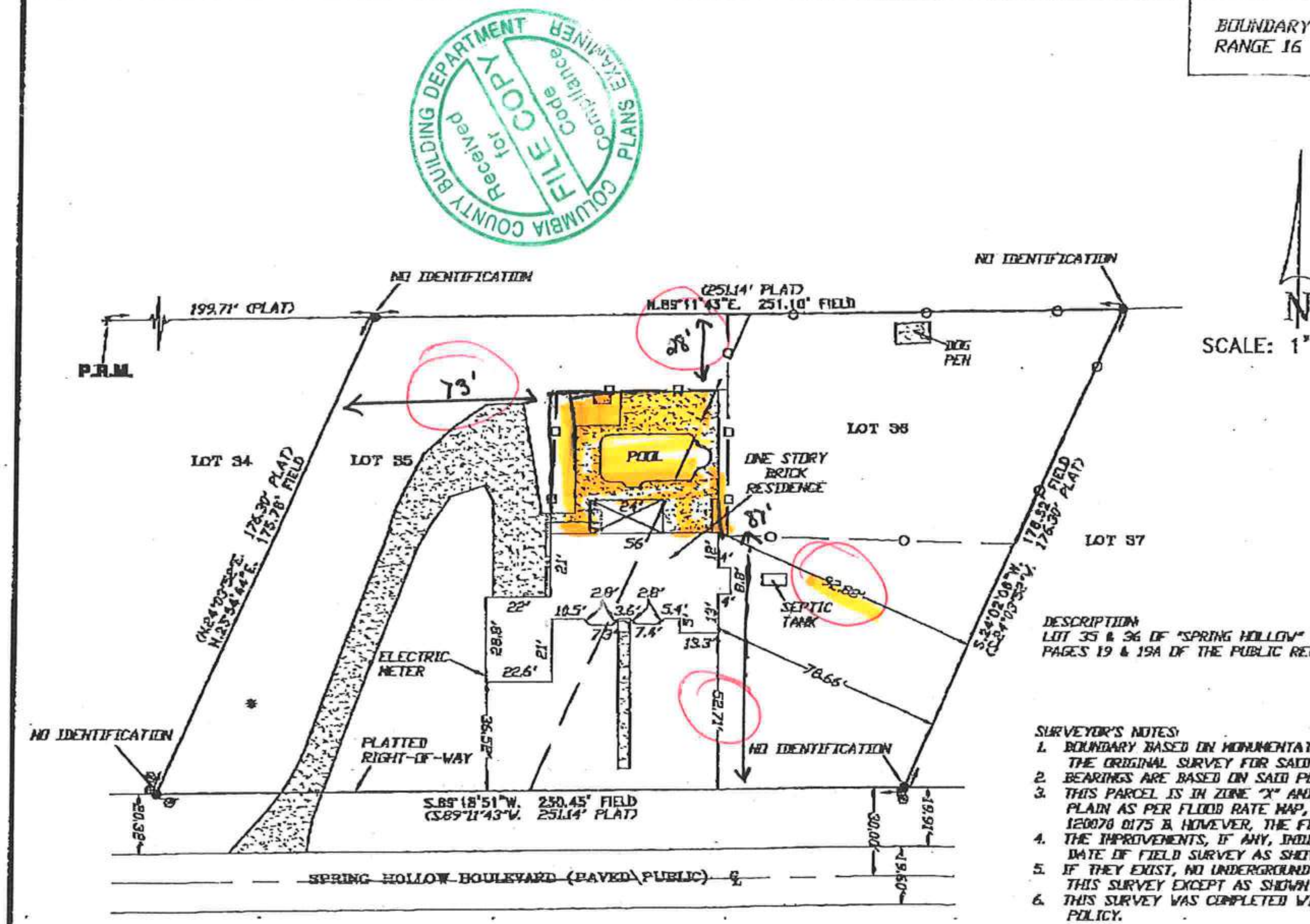

SYMBOL LEGEND

■	4"X4" CONCRETE MONUMENT FOUND
□	4"X4" CONCRETE MONUMENT SET
●	IRON PIPE FOUND
○	IRON PIN AND CAP SET
[power pole symbol]	POWER POLE
▲	WATER METER
℄	CENTERLINE
✱	WELL
[satellite dish symbol]	SATELLITE DISH
[telephone box symbol]	TELEPHONE BOX
—E—	ELECTRIC LINES
—X—	WIRE FENCE
—○—	CHAIN LINK FENCE
—□—	WOODEN FENCE

DESCRIPTION:
LOT 35 & 36 OF "SPRING HOLLOW" AS PER PLAT THEREOF RECORDED IN PLAT BOOK 4, PAGES 19 & 19A OF THE PUBLIC RECORDS OF COLUMBIA COUNTY, FLORIDA.

SURVEYOR'S NOTES:

1. BOUNDARY BASED ON MONUMENTATION FOUND IN ACCORDANCE WITH THE RETRACEMENT OF THE ORIGINAL SURVEY FOR SAID PLAT OF RECORD.
2. BEARINGS ARE BASED ON SAID PLAT OF RECORD.
3. THIS PARCEL IS IN ZONE "X" AND IS DETERMINED TO BE OUTSIDE THE 500 YEAR FLOOD PLAIN AS PER FLOOD RATE MAP, DATED 6 JANUARY, 1988 COMMUNITY PANEL NUMBER 120070 0175 B. HOWEVER, THE FLOOD INSURANCE RATE MAPS ARE SUBJECT TO CHANGE.
4. THE IMPROVEMENTS, IF ANY, INDICATED ON THIS SURVEY DRAWING ARE AS LOCATED ON DATE OF FIELD SURVEY AS SHOWN HEREON.
5. IF THEY EXIST, NO UNDERGROUND ENCROACHMENTS AND/OR UTILITIES WERE LOCATED FOR THIS SURVEY EXCEPT AS SHOWN HEREON.
6. THIS SURVEY WAS COMPLETED WITHOUT THE BENEFIT OF A TITLE COMMITMENT OR A TITLE POLICY.

CERTIFIED TO:
FRANKE & JUDY K. WALLACE
BANK OF AMERICA N.A.
ABSTRACT AND TITLE SERVICES, INC.
CHICAGO TITLE INSURANCE COMPANY

FIELD BOOK 243 PAGE(S) 72

SURVEYOR'S CERTIFICATION

I HEREBY CERTIFY THAT THIS SURVEY WAS MADE UNDER MY RESPONSIBLE CHARGE AND MEETS THE MINIMUM TECHNICAL STANDARDS AS SET FORTH BY THE FLORIDA BOARD OF PROFESSIONAL SURVEYORS AND MAPPERS IN CHAPTER 61G17-6, FLORIDA ADMINISTRATIVE CODE, PURSUANT TO SECTION 472.027, FLORIDA STATUTES.

06/25/02 — FIELD SURVEY DATE
07/02/02 — DRAWING DATE
L. SCOTT BRITT, P.L.S. CERTIFICATION # 5757

NOTE: UNLESS IT BEARS THE SIGNATURE AND THE ORIGINAL RAISED SEAL OF A FLORIDA LICENSED SURVEYOR AND MAPPER THIS DRAWING, SKETCH, PLAT OR MAP IS FOR INFORMATIONAL PURPOSES ONLY AND IS NOT VALID.

BRITT SURVEYING
LAND SURVEYORS AND MAPPERS
1426 WEST DUVAL STREET LAKE CITY, FLORIDA 32055
(386)752-7163 FAX (386)752-5573

WORK ORDER # L-12736

DATE 07/11/2011

Columbia County Building Permit

This Permit Must Be Prominently Posted on Premises During Construction

PERMIT
000029531

APPLICANT NADEAN MCINTOSH PHONE 386.754.8678

ADDRESS 289 NW CORINTH DRIVE LAKE CITY FL 32055

OWNER BARRY T. WEBB PHONE

ADDRESS 650 NW SPRING HOLLOW BLVD. LAKE CITY FL 32701

CONTRACTOR MICHAEL DELAHOZ PHONE 386.754.8678

LOCATION OF PROPERTY LAKE JEFFERY RD,TR TO SPRING HOLLOW BLVD.,TR AND IT'S ON L @ THE VERY END.

TYPE DEVELOPMENT POOL ENCLOSURE ESTIMATED COST OF CONSTRUCTION 12900.00

HEATED FLOOR AREA TOTAL AREA HEIGHT STORIES

FOUNDATION WALLS ROOF PITCH FLOOR

LAND USE & ZONING RSF-2 MAX. HEIGHT 35

Minimum Set Back Requirments: STREET-FRONT 25.00 REAR 15.00 SIDE 10.00

NO. EX.D.U. 1 FLOOD ZONE X DEVELOPMENT PERMIT NO.

PARCEL ID 24-3S-16-02273-029 SUBDIVISION SPRING HOLLOW

LOT 35/36 BLOCK PHASE UNIT TOTAL ACRES

Culvert Permit No.	Culvert Waiver	Contractor's License Number	Applicant/Owner/Contractor
		SCC056689	Nadean M Delahoz

Driveway Connection	Septic Tank Number	LU & Zoning checked by	Approved for Issuance	New Resident
EXISTING		BLK	TC	N

COMMENTS: ACCESSORY USE. NOC ON FILE.

Check # or Cash 4071

FOR BUILDING & ZONING DEPARTMENT ONLY

(footer/Slab)

Temporary Power date/app. by Foundation date/app. by Monolithic date/app. by

Under slab rough-in plumbing date/app. by Slab date/app. by Sheathing/Nailing date/app. by

Framing date/app. by Insulation date/app. by

Rough-in plumbing above slab and below wood floor date/app. by Electrical rough-in date/app. by

Heat & Air Duct date/app. by Peri. beam (Lintel) date/app. by Pool date/app. by

Permanent power date/app. by C.O. Final date/app. by Culvert date/app. by

Pump pole date/app. by Utility Pole date/app. by M/H tie downs, blocking, electricity and plumbing date/app. by

Reconnection date/app. by RV date/app. by Re-roof date/app. by

BUILDING PERMIT FEE $ 65.00 CERTIFICATION FEE $ 0.00 SURCHARGE FEE $ 0.00

MISC. FEES $ 0.00 ZONING CERT. FEE $ 50.00 FIRE FEE $ 0.00 WASTE FEE $

FLOOD DEVELOPMENT FEE $ FLOOD ZONE FEE $ CULVERT FEE $ **TOTAL FEE** 115.00

INSPECTORS OFFICE CLERKS OFFICE CH

NOTICE: IN ADDITION TO THE REQUIREMENTS OF THIS PERMIT, THERE MAY BE ADDITIONAL RESTRICTIONS APPLICABLE TO THIS PROPERTY THAT MAY BE FOUND IN THE PUBLIC RECORDS OF THIS COUNTY. AND THERE MAY BE ADDITIONAL PERMITS REQUIRED FROM OTHER GOVERNMENTAL ENTITIES SUCH AS WATER MANAGEMENT DISTRICTS, STATE AGENCIES, OR FEDERAL AGENCIES.

"WARNING TO OWNER: YOUR FAILURE TO RECORD A NOTICE OF COMMENCEMENT MAY RESULT IN YOUR PAYING TWICE FOR IMPROVEMENTS TO YOUR PROPERTY. IF YOU INTEND TO OBTAIN FINANCING, CONSULT WITH YOUR LENDER OR AN ATTORNEY BEFORE RECORDING YOUR NOTICE OF COMMENCEMENT."

EVERY PERMIT ISSUED SHALL BECOME INVALID UNLESS THE WORK AUTHORIZED BY SUCH PERMIT IS COMMENCED WITHIN 180 DAYS AFTER ITS ISSUANCE, OR IF THE WORK AUTHORIZED BY SUCH PERMIT IS SUSPENDED OR ABANDONED FOR A PERIOD OF 180 DAYS AFTER THE TIME THE WORK IS COMMENCED. A VALID PERMIT RECIEVES AN APPROVED INSPECTION EVERY 180 DAYS. WORK SHALL BE CONSIDERED NOT SUSPENDED, ABANDONED OR INVALID WHEN THE PERMIT HAS RECIEVED AN APPROVED INSPECTION WITHIN 180 DAYS OT THE PREVIOUS INSPECTION.

The Issuance of this Permit Does Not Waive Compliance by Permittee with Deed Restrictions.