SUNBURY - V

FLORIDA DESIGN CRITERIA
REVISED 05-03-07

BUILDING DATA

FLORIDA BUILDING CODE 2004 : RESIDENTIAL, 2005 and 2006 SUPPLEMENT
FLORIDA BUILDING CODE 2004 : PLUMBING, 2005 and 2006 SUPPLEMENT
FLORIDA BUILDING CODE 2004 : MECHANICAL, 2005 and 2006 SUPPLEMENT
FLORIDA BUILDING CODE 2004 : FUEL GAS, 2005 and 2006 SUPPLEMENT

NATIONAL ELECTRICAL CODE 2005

STRUCTURAL DESIGN PARAMETERS: ASCE 7-2002 (PER FRC 2004 : SECTION R301.2.1.1)

CLASSIFICATION : 2

OCCUPANCY: RESIDENTIAL

BUILDING DESIGN: ENCLOSED

WIND SPEED: 125 MPH - 3 SECOND GUST (FRC 2004 : SECTION R301.2.1.3)

EXPOSURE: B

INTERNAL PRESSURE COEFFICIENT: GCpi = +/- 0.18

IMPORTANCE FACTOR: 1.0

NUMBER OF STORIES: TWO STORY

BUILDING MEAN ROOF HEIGHT: 25 FEET, MAX.

WOOD FRAMING INSPECTION
ALL PLUMBING, ELECTRICAL AND MECHANICAL ROUGH-INS MUST BE COMPLETE, INSPECTED AND APPROVED BEFORE REQUESTING THE FRAMING INSPECTION. (FRC 2004, SECTION R109.3)

TERMITE TREATMENT
THE BUILDING AND PATIO SLAB HAVE RECIEVED A COMPLETE TREATMENT FOR THE PREVENTION OF SUBTERRANEAN TERMITES. THE TREATMENT IS IN ACCORDANCE WITH THE RULES AND LAWS OF THE FLORIDA DEPARTMENT OF AGRICULTURE AND CONSUMER SERVICES. (FRC 2004, SECTION R320)

BORA CARE : TERMITE TREATMENT
THE BUILDING HAS RECIEVED A COMPLETE TREATMENT FOR THE PREVENTION OF SUBTERRANEAN TERMITES. THE TREATMENT IS IN ACCORDANCE WITH THE RULES AND LAWS OF THE FLORIDA DEPARTMENT OF AGRICULTURE AND CONSUMER SERVICES. (FRC 2004, SECTION R320.1.8)

EXTERIOR WINDOWS AND GLASS DOORS
EXTERIOR WINDOWS AND GLASS DOORS SHALL BE TESTED BY AN APPROVED INDEPENDENT TESTING LABORATORY, AND SHALL BE LABELED WITH AN APPROVED LABEL (FRC 2004, SECTION R613)

SEE MANUFACTURER'S DETAIL SHEETS FOR DESIGN CRITERIA AND INSTALLATION METHODS.

WINDBOURNE DEBRIS REGIONS
WINDOWS IN BUILDINGS LOCATED IN WIND-BOURNE DEBRIS REGIONS SHALL HAVE GLAZED OPENINGS PROTECTED FROM WIND-BOURNE DEBRIS. GLAZED OPENING PROTECTION FOR WIND-BORNE DEBRIS SHALL MEET THE REQUIREMENTS OF THE LARGE MISSILE TEST OF ASTM E 1996 AND OF ASTM E 1886, SSTD 12, ANSI/DASMA 115 (FOR GARAGE DOORS) OR TAS201, 202 AND 203 . (FRC 2004, SECTION R301.2.1.2)

GEORGIA DESIGN CRITERIA
REVISED 12-07-06

BUILDING DATA

INTERNATIONAL RESIDENTIAL CODE 2006
INTERNATION PLUMBING CODE 2006
INTERNATIONAL MECHANICAL CODE 2006
INTERNATIONAL FUEL GAS CODE 2006

NATIONAL ELECTRICAL CODE 2005

STRUCTURAL DESIGN PARAMETERS: ASCE 7-2002 (SECTION R301.2.1.1)

CLASSIFICATION : 2

OCCUPANCY: RESIDENTIAL

BUILDING DESIGN: ENCLOSED

WIND SPEED: 125 MPH - 3 SECOND GUST (SECTION R301.2.1.3)

EXPOSURE: B

INTERNAL PRESSURE COEFFICIENT: GCpi = +/- 0.18

IMPORTANCE FACTOR: 1.0

NUMBER OF STORIES: TWO STORY

BUILDING MEAN ROOF HEIGHT: 25 FEET, MAX.

1TM00301

INDEX OF DRAWINGS : SUNV3-125R

SHEET NO.	TITLE	VIVACE FILE NAME
ARCHITECTURAL		
0	COVER SHEET	a_sunv-125r-000
1	EXTERIOR ELEVATIONS	a_sunv-125r-001
2	FOUNDATION PLAN	a_sunv-125r-002
3	FIRST FLOOR PLAN	a_sunv-125r-003
WLI	WINDOW & LINTEL SCHEDULE	a_sunv-125r-004
3A	INTERIOR ELEVATIONS AND DETAILS	a_sunv-125r-005
CSU	STANDARD BUILDING SECTIONS	a_sunv-125r-006
FD0	SECOND FLOOR FRAMING	a_sunv-125r-007
4	SECOND FLOOR PLAN	a_sunv-125r-008
WP2	WALL PANEL SHEET	a_sunv-125r-009
WP3	WALL PANEL SHEET	a_sunv-125r-010
TRI	ROOF TRUSS INFO	a_sunv-125r-011
RSI	ROOF SHEATHING	a_sunv-125r-012
ELECTRICAL		
ELI	ELECTRICAL FIRST FLOOR	e_sun-r-000
ELA	ELECTRICAL DETAILS / LOAD CALCS	e_sun-r-001
EL2	ELECTRICAL SECOND FLOOR	e_sun-r-002
MECHANICAL		
HVA	HVAC REGISTER LAYOUT	m_sun-r-000
ISO-H	HVAC ISOMETRIC	m_sun-r-001
PLUMBING		
FPI	PLUMBING UNDERGROUND PLAN	p_sun-r-000
ISO-P	DWV PLUMBING ISOMETRIC	p_sun-r-001
ISO-W	CPVC WATER ISOMETRIC	p_sun-r-002
STANDARD DETAILS		
FTG	STANDARD DETAILS - FOOTINGS	s_sun-000
WS-S1	STANDARD DETAILS - WALL SECTION	s_sun-001
WS-S2	STANDARD DETAILS - WALL SECTION	s_sun-002
WS-B1	STANDARD DETAILS - WALL SECTION	s_sun-003
SD1	STANDARD DETAILS	s_sun-004
SDD	STANDARD DETAILS - DOORS	s_sun-005
SDW	STANDARD DETAILS - WINDOWS	s_sun-006
SDR	STANDARD DETAILS - ROOFS	s_sun-007
SDH	STANDARD DETAILS - HEATING	s_sun-008
STR	STANDARD DETAILS - STAIRS	s_sun-009

WOOD TRUSS

REVISIONS :

1TM00301 ORA
3-1 1TM

08-14-07 REV. CODE INFORMATION

COPYRIGHT © 2005 MARONDA HOMES

Maronda Homes
(407) 321-0064 4005 MARONDA WAY SANFORD, FLORIDA

FLORIDA:
THIS STRUCTURE WAS DESIGNED IN ACCORDANCE AND MEETS THE REQUIREMENTS OF SECTION R301 OF THE INTERNATIONAL RESIDENTIAL CODE 2006 FOR 125 MPH WIND SPEED, EXPOSURE B, ENCLOSED BUILDING, ALL CONNECTORS HAVE BEEN CHECKED TO WITHSTAND ALL APPLICABLE LOADS.

GEORGIA:
THIS STRUCTURE WAS DESIGNED IN ACCORDANCE AND MEETS THE REQUIREMENTS OF SECTION R301 OF THE INTERNATIONAL RESIDENTIAL CODE 2006 FOR 125 MPH WIND SPEED, EXPOSURE B, ENCLOSED BUILDING, ALL CONNECTORS HAVE BEEN CHECKED TO WITHSTAND ALL APPLICABLE LOADS.

D:\Houses_05\sunbury\125\sunv-125.000

AMERICANA | COVER SHEET

SUNBURY
ELEVATION "V"

GARAGE: RIGHT
125 MPH

DRAWN BY:
RELEASE DATE: 03-20-06

Maronda Systems
4005 Maronda Way
Sanford, FL 32771
(407)321-0064

Tomas Ponce P.E.
License No. 0050088

OCT 10 2007

SHEET:
0v

PLOT DATE: 27 AUG 2007 10:27:46

FILE COPY

FILE COPY

FLORIDA BUILDING CODE 2004 : RESIDENTIAL

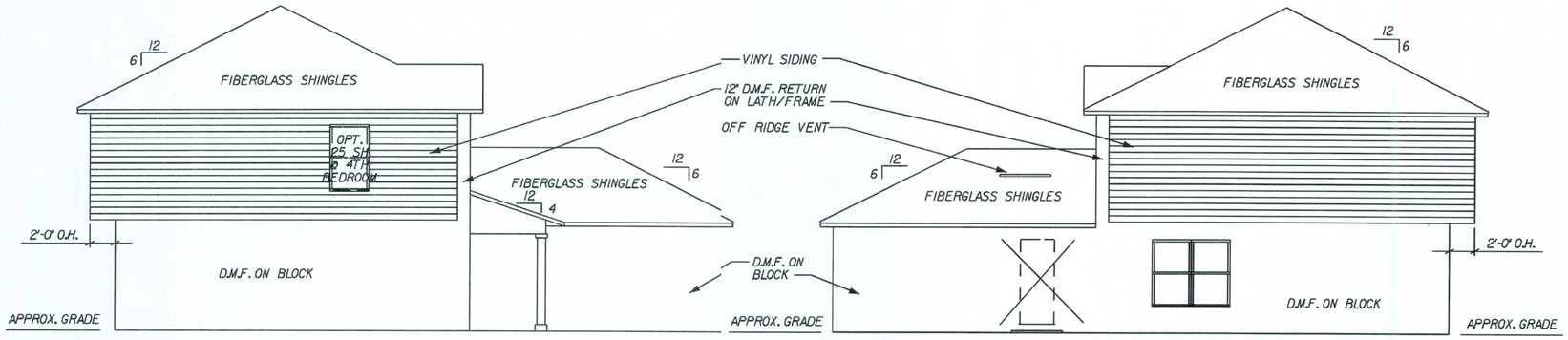

D — LEFT ELEVATION
SCALE : 1/8" = 1'-0"

C — RIGHT ELEVATION
SCALE : 1/8" = 1'-0"

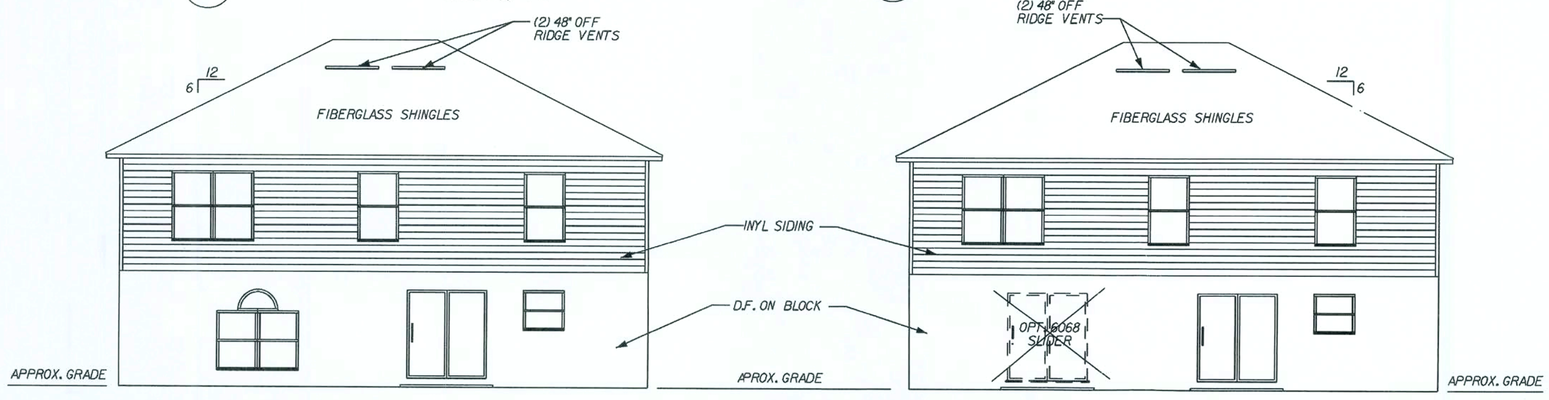

B — REAR ELEVATION
SCALE : 1/8" = 1'-0"

OPT. REAR ELEVATION
SCALE : 1/8" = 1'-0"

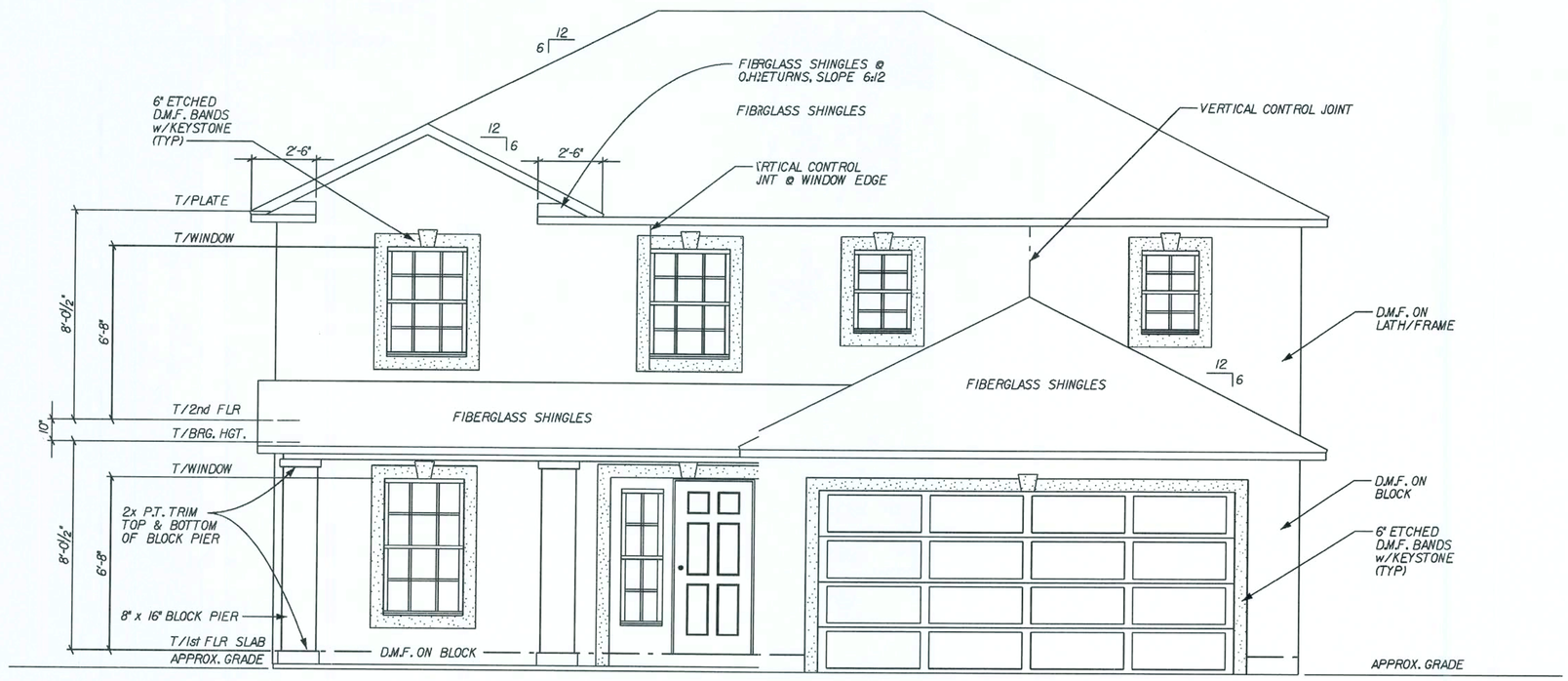

A — FRONT ELEVATION
SCALE : 1/4" = 1'-0"

GENERAL ELEVATION NOTES:

REVISED 01-05-06

1. DMF - DECO MASONRY/STUCCO FINISH SHALL COMPLY WITH THE REQUIREMENTS OF ATSM C926 AND C1063.
2. EAVE & GABLE OVERHANGS 12" ALUM FASCIA AND SOFFITS. PLUMB CUT WITH LEVEL RETURNS.
3. 7/8" MIN. THICKNESS DMF OVER LATH/FRAME AND 1/2" MIN. THICKNESS OVER BLOCK
4. DMF/STUCCO INSTALLED OVER PAPER-BACKED LATH AND HOUSEWRAP @ ALL EXTERIOR WOOD FRAME CONSTRUCTION.

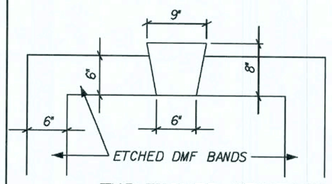

TYP. ETCHED KEYSTONE
SCALE: 3/4" = 1'-0"

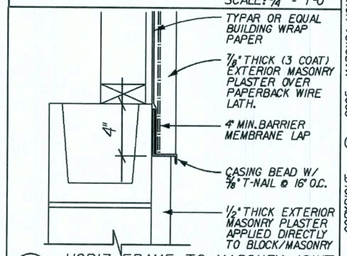

1 HORIZ. FRAME TO MASONRY JOINT
REVISED 12-11-06
SCALE: N.T.S.

REVISIONS :

08-01-06	REV. STUCCO DETAIL
09-22-06	REV. PORCH SLOPE/FNT. WINDOW

COPYRIGHT © 2005 MARONDA HOMES

Maronda Homes
(407) 321-0064 4005 MARONDA WAY SANFORD, FLORIDA

GEORGIA:
THIS STRUCTURE WAS DESIGNED IN ACCORDANCE AND MEETS THE REQUIREMENTS OF THE INTERNATIONAL RESIDENTIAL CODE 2006

FLORIDA:
THIS STRUCTURE WAS DESIGNED IN ACCORDANCE AND MEETS THE REQUIREMENTS OF THE FLORIDA BUILDING CODE 2004 RESIDENTIAL AND 2005, 2006 SUPPLEMENT

AMERICANA — EXT. ELEVATION

SUNBURY-NEWBERRY

ELEVATION "V"

DRAWN BY: GARAGE: RIGHT
RELEASE DATE: 03-20-06

Maronda Systems
4005 Maronda Way
Sanford, FL 32771
(407)321-0064

Tomas Ponce P.E.
License No. 0050068

OCT 10 2007

SHEET: IV

PLOT DATE: 27 AUG 2007 10:27:46

P:\Projects\SUNBURY\std\sunv.DOI

FLORIDA BUILDING CODE 2004 : RESIDENTIAL

THIS DRAWING WAS PRINTED BY USING THE AMERICAN WOOD SOFTWARE AND HAS BEEN REVIEWED BY SE, DS, SI, MF, JG, IF, CB, UM, II AND II.

GENERAL FOUNDATION NOTES:

ALL FOOTING REBAR SHALL BE CONTINUOUS (2) #5 BARS GRADE 40 STEEL w/ 3" MIN. COVERAGE, U.N.O.

ALL VERTICAL REBAR, DOWN REBAR, DOWEL REBAR AND BOND BEAM REINFORCEMENT SHALL BE #5 BARS GRADE 40 STEEL

PLUMBING PASSING UNDER OR THROUGH A FOOTING SHALL BE ENCASED IN A PIPE TWO (2) SIZES LARGER THAN THE PLUMBING PIPE.

■ - INDICATES FILLED CELL WITH REBAR
□ - INDICATES FILLED CELL WITHOUT REBAR

ALL CONCRETE GROUTED CELLS FILLED w/ 3000 psi CONCRETE SHALL BE CLEAR UNOBSTRUCTED CONTINUOUS 3" x 3" MIN. CELLS w/ (1) #5 BAR GRADE 40 STEEL TIED AT FOOTING LINTEL STEEL. PROVIDE INSPECTION HOLE AT BOTTOM OF GROUTED CELL STACK.

TYPICAL CONCRETE SLAB: 3½" DEEP POURED 2500 psi CONCRETE SLAB w/ 6x6 10/ WIRE OR FIBER MESH ON VISQUEEN VAPOR BARRIER w/ ALL JOINTS TAPED OVER CLEAN COMPACTED (2000 psf. MIN.) TERMITE TREATED FILL.

FOR INSTALLATION OF GROUND ROD, SEE TYP.CONC.ENCASED ELECTRODE DETAIL SHEET* FTG

SEE DRAWING * FPI FOR UNDERGROUND PLUMBING AND MECH. CHASES FOR LOCATIONS

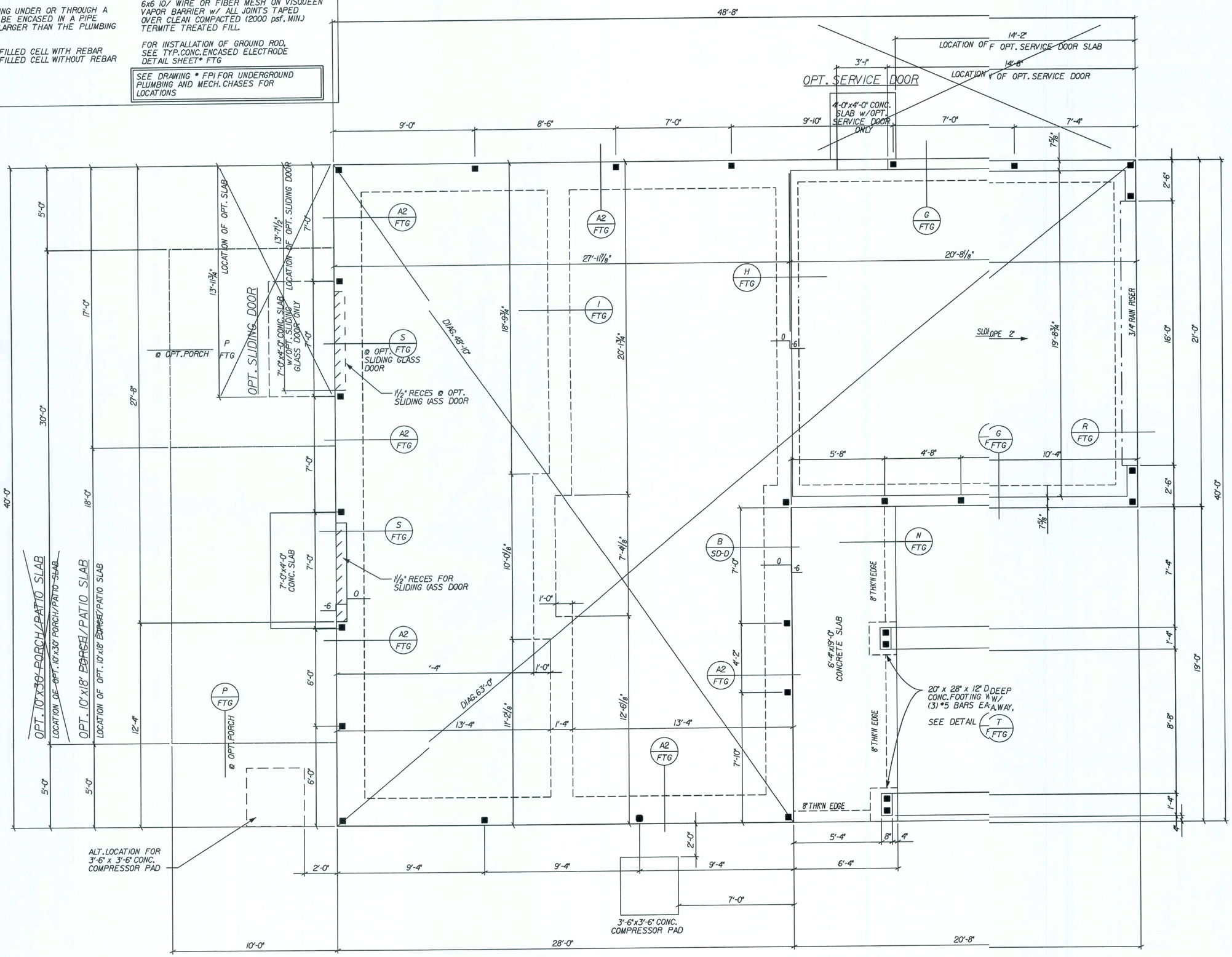

REVISIONS :	
04-24-06	REVISED NOTE AT GARAGE DOOR
05-15-06	REV. NOTE AT PORCH COL
06-12-06	ADDED DOOR PAN DETAIL MARKER
09-22-06	REV. FRONT PORCH TO 6'-4" DEEP
08-14-07	REV. CODE INFORMATION

COPYRIGHT © 2005 MARONDA HOMES

Maronda Homes

(407) 321-0064 4005 MARONDA WAY SANFORD, FLORIDA

FLORIDA: THIS STRUCTURE WAS DESIGNED IN ACCORDANCE AND MEETS THE REQUIREMENTS OF SECTION R301 OF THE FLORIDA BUILDING CODE 2004 + RESIDNTIAL CODE 2006 SUPPLEMENT FOR 125 MPH EXPOSURE B, ENCLOSED BUILDING. ALL CONNECTORS HAVE BEEN CHECKED TO WITHSTAND ALL APPLICABLE LOADS.

GEORGIA: THIS STRUCTURE WAS DESIGNED IN ACCORDANCE AND MEETS THE REQUIREMENTS OF SECTION R301 OF THE INTERNATIONAL RESIDENTIAL CODE 2006 + FOR 125 MPH EXPOSURE B, ENCLOSED BUILDING. ALL CONNECTORS HAVE BEEN CHECKED TO WITHSTAND ALL APPLICABLE LOADS.

AMERICANA

SUNBURY

FOUNDATION PLAN

ELEVATION "V"

GARAGE: RIGHT

125 MPH

DRAWN BY:

RELEASE DATE: 03-20-06

p:\7houses.05\sunbury\25\sunv-125.012

10:27:47

Maronda Systems
4005 Maronda Way
Sanford, FL 32771
(407)321-0064

Tomas Ponce P.E.
License No. 0050068

OCT 10 2007

SHEET:

2V

PLOT DATE: 27 AUG 2007

FLORIDA BUILDING CODE 2004 : RESIDENTIAL

IS DRAWING WAS PRINTED BY USING THE TAMERAN WINCAD SOFTWARE AND HAS BEEN REVIEWED BY SEALED BY: MICHAEL L. PONCE, P.E. LICENSE NUMBER 50068

GENERAL FIRST FLOOR NOTES:

ALL EXTERIOR WALLS SHALL BE CONSIDERED SHEAR WALLS MINUS ALL WINDOW AND DOOR OPENINGS.

EXTERIOR WALLS TO BE 7⅝" CONCRETE BLOCK w/ P.T.FURRING STRIPS IN A/C AREA, TOTAL WIDTH = 8⅜"

EXTERIOR OPENING DIMENSIONS ARE TO FACE OF MASONRY OPENING.

INTERIOR LOAD BEARING WALLS TO BE 2x4 WOOD FRAME WALLS w/ STUDS @ 16" O.C. SEE STRUCTURAL WALL SCHEDULE SHEET # TR1

INTERIOR NON-LOAD BEARING WALLS TO BE NOMINAL 3⅝" MTL STUD, 25 ga. ,U.N.O.

ALL WOOD NOT SEPERATED FROM AND/OR IN DIRECT CONTACT WITH CONCRETE OR MASONRY SHALL BE "PRESSURE TREATED WOOD"

SEE LINTEL SHEET FOR LINTEL SIZES OVER WINDOWS AND DOORS. PRECAST LINTELS BY CAST-CRETE.

ALL COMPOSITE BEAMS OVER WINDOW AND DOOR OPENINGS ARE TO BE 8" NOMINAL WIDTH AND 16" NOMINAL HEIGHT,U.N.O. THE 16" NOMINAL HEIGHT SHALL CONSIST OF AN 8" TOP COURSE (BOND BEAM BLOCK) FILLED w/ 3000 psi CONCRETE w/ (1) GRADE 40 CONTINUOUS HORZ.#5 REBAR AND AN 8" HIGH STRENGTH PRECAST LINTEL

LOWER COURSE WHICH SHA BE UNFILLED, U.N.O. FOR FILLED PRECAST LINTELS,USE 3000 psi CONCRETE w/ ⅜" AGGREGATE.FOR REINFORCED PRECAST LINTLS,USE GRADE 40 REINFORCING STEEL.

PROVIDE SAFETY GLAZING in [T] - TEMPERED
ALL WINDOWS OVER BATH UBS.
ALL WINDOWS WITHIN 24" O. A DOOR SWING.
ALL SLIDING GLASS DOORS.
ALL FIXED GLASS LITES GER 30 SQ.FT.
ALL LITES WITHIN 18" OF TE FLOOR AND INDIVIDUAL PANE GREAER THAN 9 SQ.FT.
ALL SHOWER ENCLOSURES.

PROVIDE AFCIs (arc-fault ctrlt Interrupters) IN ALL DWELLING UNIT BEDROOS PER NEC, SECTION 210-12

THE A/C DISCONNECT WILL BE LOCATED WITHIN 3 FEET OF THE COMPRESSOR.

SEE SHEET # WL1 FOR WINDOW AND LINTEL SCHEDULES AND DETAILS

PROVIDE HEADER w/ (1) 2x4 JACK AND (1) 2x4 STUD, EACH SIDE OF OPENING (NO STRAPPING REQUIRED, U.N.O.) HDR TO BE NO.2 SYP SEE PLAN FOR SIZE.

ALL DRYWALL TO BE ½" THICK, U.N.O.

SC DOOR = 20 MINUTE FIRE RATED DOOR, MIN.

REVISED 02-10-06

SQUARE FOOTAGE:

1st FLOOR LIVING	1120 SQ. FT.
2nd FLOOR LIVING	1103 SQ. FT.
TOTAL LIVING	2223 SQ. FT.
GARAGE AREA	434 SQ. FT.
COVERED ENTRY	114 SQ. FT.
TOTAL AREA	2771 SQ. FT.

OPENING PRESSURES 125mph:

A: +28.15 / -30.0.55	B: +23.7 / -27.6
C: +28.15 / -31.37.7	D: +24.9 / -29.7

REVISED 02-09-05

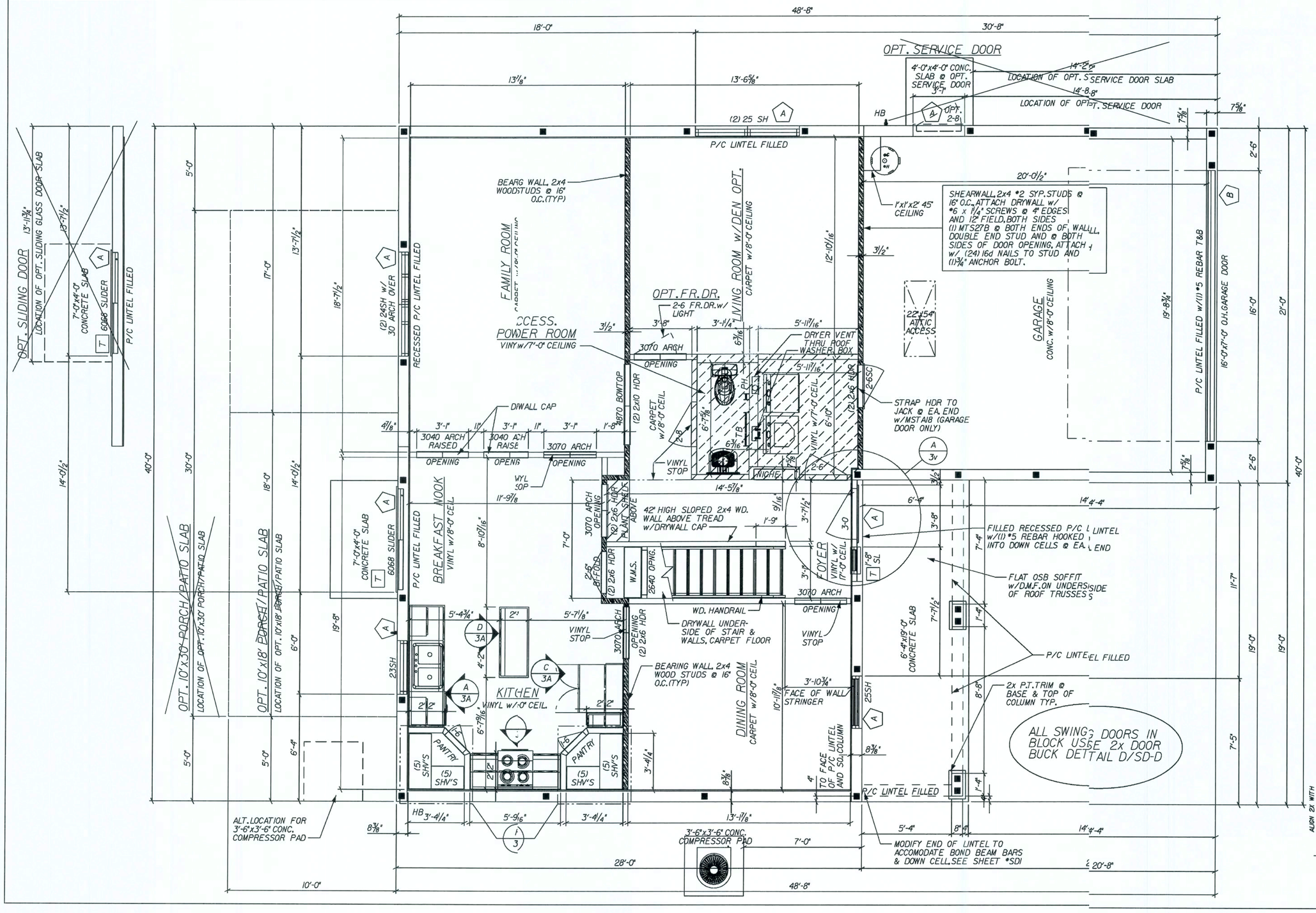

FLORIDA BUILDING CODE 2004 : RESIDENTIAL

REVISIONS :
12-14-06 REV. SERVICE DOOR SWING
08-14-07 REV. CODE INFORMATION

COPYRIGHT © 2005 MARONDA HOMES

Maronda Homes
4005 MARONDA WAY SANFORD, FLORIDA
(407) 321-0064

FLORIDA
THIS STRUCTURE WAS DESIGNED IN ACCORDANCE AND MEETS THE REQUIREMENTS OF SECTION R301 OF THE FLORIDA BUILDING CODE 2004 : RESIDENTIAL AND 2005 NATIONAL RESIDENTIAL CODE 2006 : FOR EXPOSURE B. EXCEPT FOR EXC. MPED BUILDING. GEORGIA
THIS STRUCTURE WAS DESIGNED IN ACCORDANCE AND MEETS THE REQUIREMENTS OF SECTION R301 OF THE INTERNATIONAL RESIDENTIAL CODE 2006 : FOR EXPOSURE B. EXCEPT FOR EXC. MPED BUILDING. ALL CONNECTORS HAVE BEEN CHECKED TO WITHSTAND ALL APPLICABLE LOADS.

D:\N\DOUGS..D5\SUNBURY\125\SUN-125.003

AMERICANA | FIRST FLOOR PLAN

SUNBURY

ELEVATION "V"

DRAWN BY: | GARAGE: RIGHT

RELEASE DATE: 03-20-06 | 125 MPH

PLOT DATE: 27 AUG 2007 10:27:49

Maronda Systems
4005 Maronda Way
Sanford, FL 32771
(407)321-0064

Tomas Ponce P.E.
License No. 0050068

OCT 10 2007

SHEET: 3V

FASTENERS SCHEDULE USING 3/16" X 2 1/4" TAPCONS THROUGH BUCK INTO BLOCK

NOTE 1) 1/2 WIDE: 2 FASTENERS IN HEADER-JAMB
NOTE 2) 2 WIDE: 2 FASTENERS IN HEADER-JAMB
NOTE 3) 3 WIDE: 3 FASTENERS IN HEADER-JAMB
NOTE 4) 2 HIGH: 2 FASTENERS IN EA.SIDE JAMB
NOTE 5) 3,4,OR 5 HIGH: 3 FAST.EA.SIDE JAMB
NOTE 6) 6 HIGH 26 3/4": 4 FASTENERS IN EACH SIDE JAMB
NOTE 7) 438 WINDOW INTO FRAME OPENING: #10 X 1 3/4" SCREWS
NOTE 8) SGD FASTENED WITH: #10 1 3/4": PANHEAD ALL HOLES SILLS 3/16" X 1 3/4" ANCHORS EVERYHOLE

WINDOW NOTES

F.O.WIDTH IS FROM JACK TO SILL.
F.O.HEIGHT IS FROM SILL TO BEAM.
M.O.WIDTH IS FROM BLOCK TO BLOCK.
M.O.HEIGHT IS FROM LIP OF SILL TO PRECAST.
1st.DIMENTION IS ALWAYS WIDTH.
UNIT OF MEASURE IS INCH.

ATTENTION

SCHEDULES FOR NORANDEX WINDOW FASTENERS AND CAST-CRETE LINTELS AS SHOWN, ARE TAKEN DIRECTLY FROM TABLES SUPPLIED BY THE RESPECTIVE MANUFACTURERS, AND ARE PROVIDED FOR CONVENIENCE ONLY.

NORANDEX SERIES (MO)437-(FO)438 WINDOW SIZE CHART

SERIES 500/502 SGD DOOR OPENINGS

SIZE	M.O.	FAST.	SIZE	M.O.	FAST.
6068	75 1/2 X 81 3/4	8	6080	75 1/2 X 97 3/4	8

SERIES (MO)437 - (FO)438 OPENINGS

SIZE	SINGLE M.O.	FAST.	DOUBLE M.O.	FAST.	SIZE	SINGLE F.O.	FAST.	DOUBLE F.O.	FAST.
					1H3	26 X 37 1/8	7		
23	37 3/4 X 38 3/8	2,5			24/5	36 1/2 X 55 3/4	7		
25	37 3/4 X 63	2,5	74 3/4 X 63	2,5	25	36 1/2 X 62 1/2	7	73 1/4 X 62 3/8	7

HALF ROUND MULLED TO UNIT - SERIES (MO)437 - (FO)438 OPENINGS

SIZE	SINGLE M.O.	FAST.
(2) 24 w/ 3'-0" CT	74 3/4 X 71 5/8	2,5,7

SPECIALTY WINDOWS - SERIES (MO)437 - (FO)438 OPENINGS

SIZE	SINGLE F.O.	FAST.
1-8 SL	19 3/8 X 59 3/8	7

MATERIALS

1. f'c precast lintels = 3500 psi.
2. f'c prestressed lintels = 6000 psi.
3. f'c grout = 3000 psi w/ maximum 3/8" aggregate.
4. Concrete masonry units (CMU) per ASTM C90 w/minimum net area compressive strength = 1900 psi.
5. Rebar provided in precast lintel per ASTM A615 GR60. Field rebar per ASTM A615 GR40 or GR60.
6. Prestressing strand per ASTM A416 grade 270 low relaxation.
7. 7/32 wire per ASTM A510.
8. Mortar per ASTM C270 type M or S.

TYPICAL GARAGE DESIGNATION

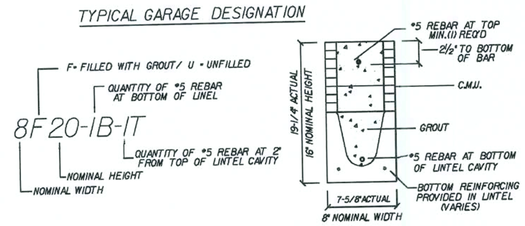

TYPICAL DESIGNATION

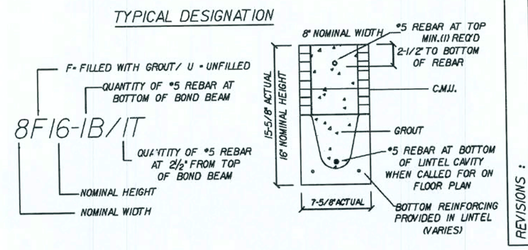

REVISED 12/29/04

CAST-CRETE LINTEL SCHEDULE

LTEL NO.	LENGTH	TYPE	APPLIED LOADS (PLF) GRAVITY	APPLIED LOADS (PLF) UPLIFT	SAFE LOADS GRAVITY	SAFE LOADS UPLIFT	COMMENT
1	7'-6"	8RF14-0B/IT	138	219	2459	1962	RECESSED
2	4'-6"	8U16-0B/IT	92	166	1599	2724	-
3	4'-6"	8U16-0B/IT	92	166	1599	2724	-
4	7'-6"	8F16-0B/IT	138	219	2632	1634	-
5	7'-6"	8RF14-0B/IT	138	219	2459	1962	RECESSED
6	7'-6"	8F16-0B/IT	138	219	2632	1634	-
7	17'-4"	8F20-IB/IT	138	219	1326	732	GARAGE DOOR
D1	7'-6"	8F16-0B/IT	138	214	2632	1634	@ OPT. SLIDING DOOR
S1	4'-6"	8U16-0B/IT	138	219	1599	2724	@ OPT.GARAGE SERVICE DR.
P1	10'-6"	8F8-0B/IT	33	220	1247	914	@ OPT.PORCH
P2	14'-8"	8F8-0B/IT	330	220	458	239	@ OPT.PORCH
P3	14'-8"	8F8-0B/IT	330	220	458	239	@ OPT.PORCH
P4	10'-6"	8F8-0B/IT	33	220	643	530	@ OPT.PORCH
P5	8'-8"	8F8-0B/IT	112	215	752	591	@ FRONT PORCH
P6	10'-6"	8F8-0B/IT	112	215	643	530	@ FRONT PORCH
P7	6'-6"	8F8-0B/IT	112	215	1238	835	@ FRONT PORCH

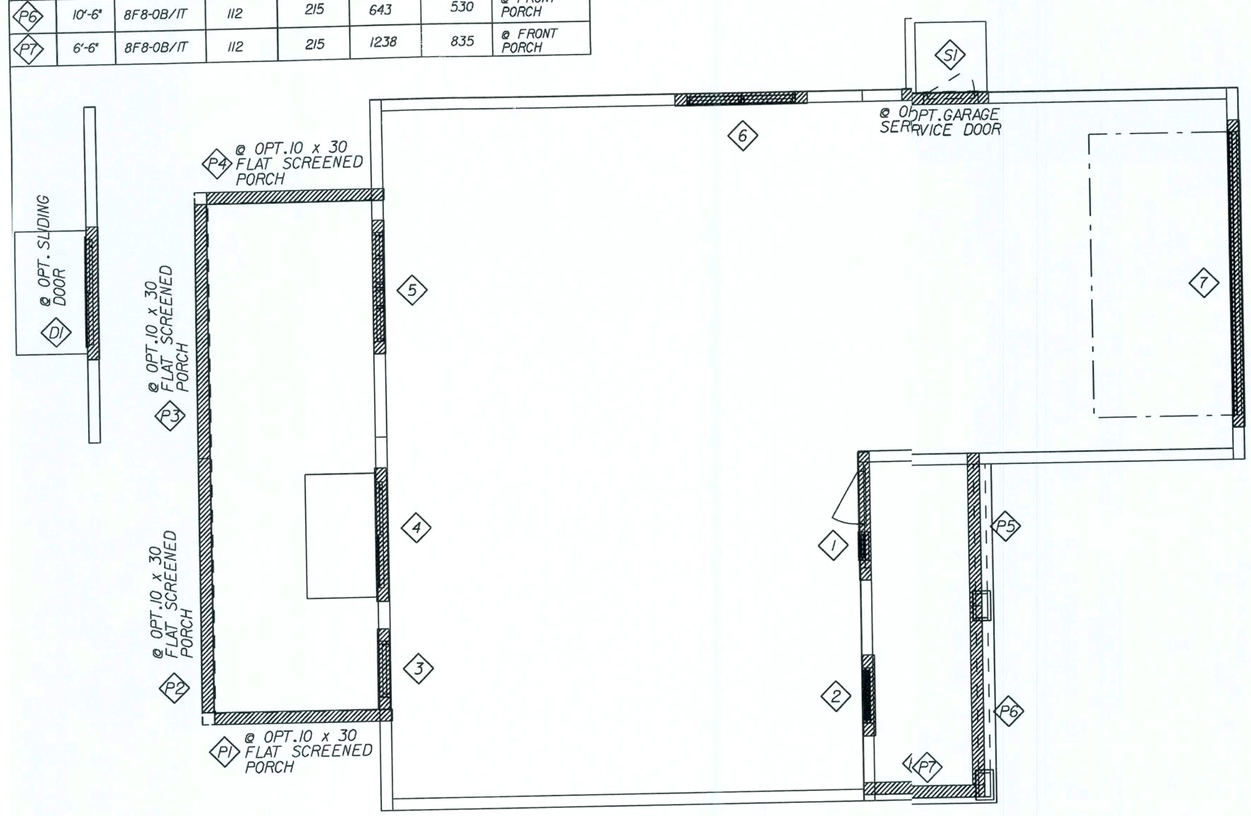

THE SPECIFIED LINTELS ON SHEET WLI ARE MANUFACTURED BY CAST-CRETE CORP. ALTERNATE MANUFACTURED LINTELS ARE AVAILABLE "BY OTHERS". SOLE AND FULL RESPONSIBILITY IS RETAINED BY THE SUB-CONTRACTOR IN THE SELECTION OF THE ALTERNATE LINTELS AS HAVING EQUAL TO OR GREATER THAN THE ACTUAL GRAVITY AND UPLIFT LOADS, THAT ARE LISTED ON THIS HOUSE SPECIFIC WLI LINTEL SCHEDULE.

REVISED 04-02-07

FLORIDA BUILDING CODE 2004 : RESIDENTIAL

REVISIONS :

08-14-07 REV. CODE INFORMATION

COPYRIGHT © 2005 MARONDA HOMES

Maronda Homes
(407) 321-0064 4005 MARONDA WAY SANFORD, FLORIDA

FLORIDA:
THIS STRUCTURE WAS DESIGNED IN ACCORDANCE AND MEETS THE REQUIREMENTS OF SECTION R301 OF THE FLORIDA BUILDING CODE 2004 : RESIDENTIAL AND 2006 : FOR 125 MPH - 3 SEC. GUST, HD. EXPOSURE B, ENCLOSED BUILDING, ALL CONNECTORS HAVE BEEN CHECKED TO WITHSTAND ALL APPLICABLE LOADS.

GEORGIA:
THIS STRUCTURE WAS DESIGNED IN ACCORDANCE AND MEETS THE REQUIREMENTS OF SECTION R301 OF THE FLORIDA BUILDING CODE 2004 : RESIDENTIAL AND 2006 : FOR 125 MPH - 3 SEC. GUST, HD. EXPOSURE B, ENCLOSED BUILDING, ALL CONNECTORS HAVE BEEN CHECKED TO WITHSTAND ALL APPLICABLE LOADS.

AMERICANA | WINDOW/LINTEL

SUNBURY

ELEVATION "V"

GARAGE: RIGHT

125 MPH

DRAWN BY:

RELEASE DATE: 03-20-06

10:27:50

Maronda Systems
4005 Maronda Way
Sanford, FL 32771
(407)321-0064

Tomas Ponce P.E.
License No. 0050068

OCT 10 2007

SHEET:
WLIV

PLOT DATE: 27 AUG 2007

D:\Mhouses_05\sunbury\125\sunv125wli

THIS DRAWING WAS PRINTED BY USING THE AMERICAN VIVIDS SOFTWARE AND HAS BEEN REVIEWED BY US, US, SI, MF, JG, IF, EB, UF, IT AND II.

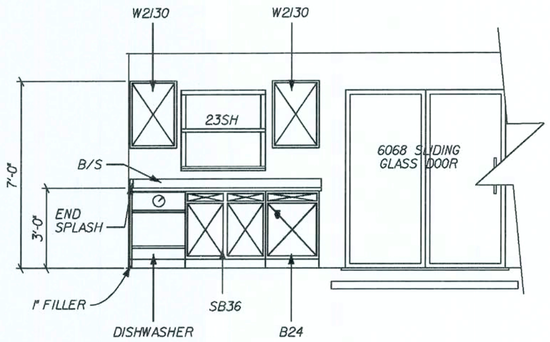

A KITCHEN ELEVATION

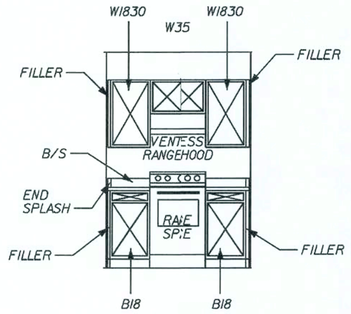

B KITCHEN ELEVATION

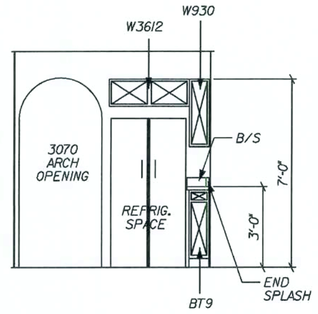

C KITCHEN ELEVATION

ON REAR FACE OF ISLAND CABINETS INSTALL 1/4" VENEER PANEL OVER 1/4" PLYWOOD BACKER w/ (2) OUTSIDE CORNER PEICES.

ISLAND > 48" ADD (1) BATTON MOLDING AT PANEL JOINT

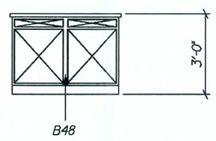

D KITCHEN ELEVATION

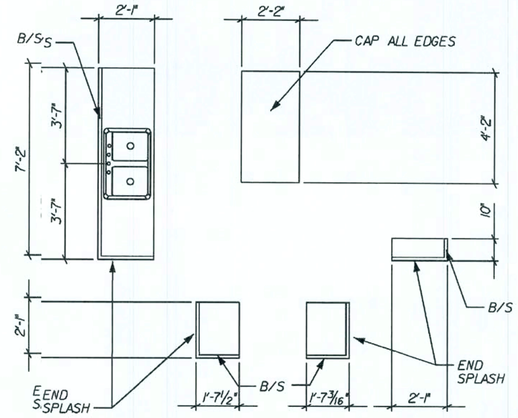

KITCHEN COUNTER TOP PLAN

FOR COUNTER TOP CONSTRUCTION ONLY. NOT FOR FIELD USE

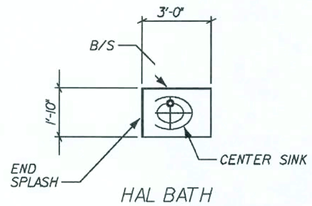

HAL BATH LAV. TOP PLAN

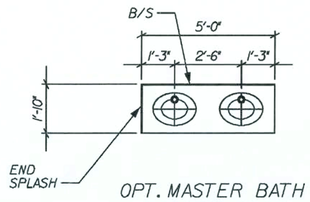

OPT. MASTER BATH LAV. TOP PLAN

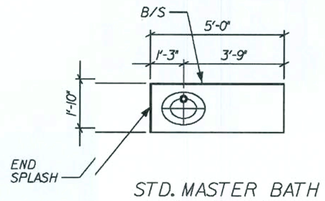

STD. MASTER BATH LAV. TOP PLAN

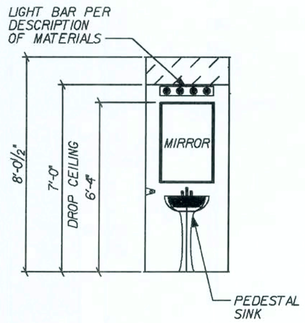

E ACCESS POWDER ROOM ELEVATION

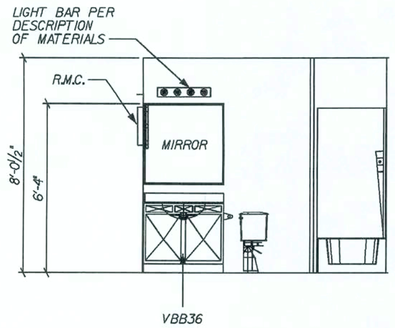

F HAL BATH ELEVATION

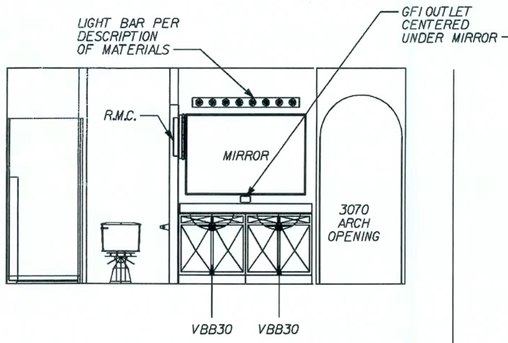

G OPTIONAL MASTER BATH ELEVATION

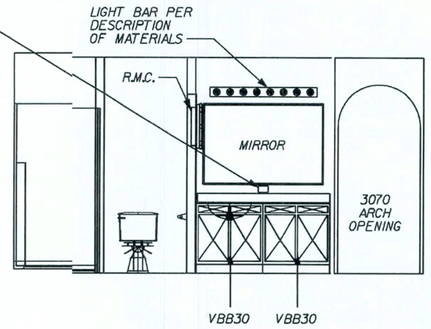

G1 STANDARD MASTER BATH ELEVATION

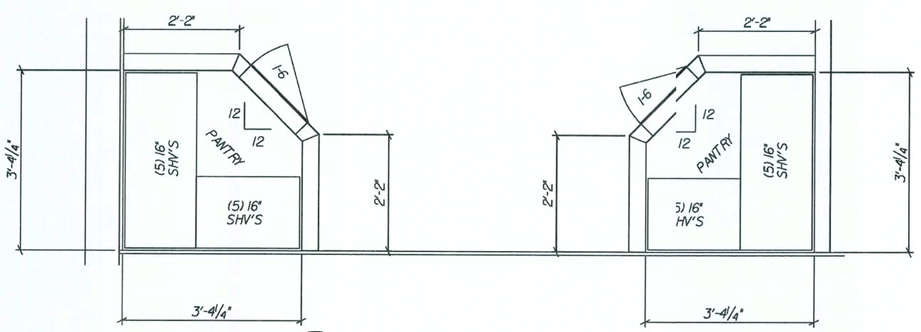

H ENLARGED PANTRY PLAN

REVISIONS :

09-12-06 REV. KITCHEN CABINETS/FILLERS

COPYRIGHT © 2005 MARONDA HOMES

Maronda Homes

(407) 321-0064 4005 MARONDA WAY SANFORD, FLORIDA

FLORIDA: THIS STRUCTURE WAS DESIGNED IN ACCORDANCE AND MEETS THE REQUIREMENTS OF THE FLORIDA BUILDING CODE 2004 : RESIDENTIAL AND2005, 2006 SUPPLEMENT

GEORGIA: THIS STRUCTURE WAS DESIGNED IN ACCORDANCE AND MEETS THE REQUIREMENTS OF THE INTERNATIONAL RESIDENTIAL CODE 2006

AMERICANA INTERIOR ELEVATIONS

SUNBURY-NEWBERRY

GARAGE: RIGHT

DRAWN BY:

RELEASE DATE: 10-08-04

SHEET: 3A

p:\V\houses_05\sunbury\sfd\sun03a

10:27:50

PLOT DATE: 27 AUG 2007

FLORIDA BUILDING CODE 2004 : RESIDENTIAL

THIS DRAWING WAS PRINTED BY USING THE PARLTHAN WINDOW SOFTWARE AND HAS BEEN REVIEWED BY SE, DS, SI, MF, JG, IF, EB, DR, IT AND IT.

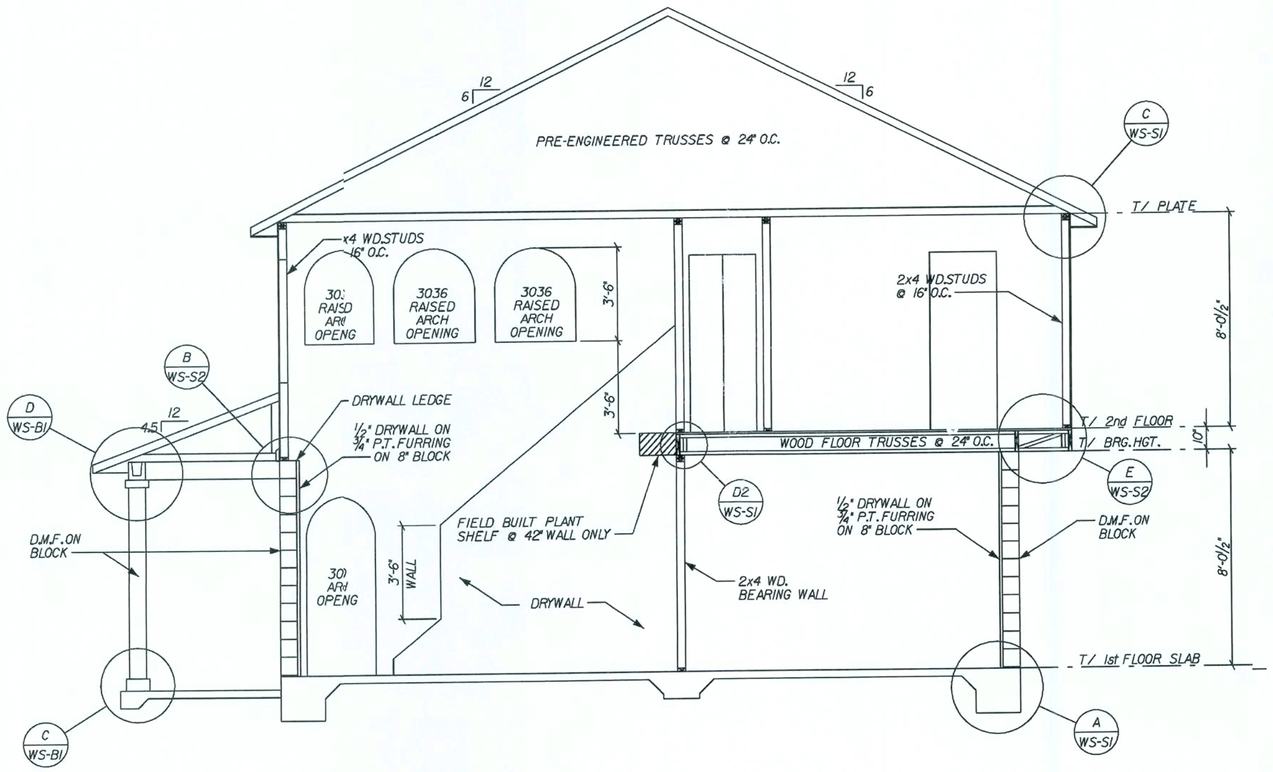

A CROSS SECTION

REVISIONS :
02-15-06 REV. WOOD TRUSS FLOOR FRAM'G
08-24-07 REV. OPNG SIZE 3038 -> 3036

COPYRIGHT © 2005 MARONDA HOMES

Maronda Homes
(407) 321-0064 4005 MARONDA WAY SANFORD, FLORIDA

FLORIDA:
THIS STRUCTURE WAS DESIGNED IN ACCORDANCE AND MEETS THE REQUIREMENTS OF THE FLORIDA BUILDING CODE RESIDENTIAL AND2005, 2006 SUPLEMENT

GEORGIA:
THIS STRUCTURE WAS DESIGNED IN ACCORDANCE AND MEETS THE REQUIREMENTS OF THE INTERNATIONAL RESIDENTIAL CODE 2006

AMERICANA | BLD. CROSS SECTION

SUNBURY
ELEVATION "V"

DRAWN BY:
GARAGE: RIGHT
RELEASE DATE: 03-20-06

Maronda Systems
4005 Maronda Way
Sanford, FL 32771
(407)321-0064

Tomas Ponce P.E.
License No. 0050068

OCT 10 2007

SHEET:
CSU

PLOT DATE: 27 AUG 2007
10:27:50
p:\f\truss8_05\sunbury\std\sunv.csu

FLORIDA BUILDING CODE 2004 :RESIDENTIAL

HS DRAWING WAS PRINTED BY USING THE AMERICAN VIGOR SOFTWARE AND HAS BEEN REVIEWED BY SE, DS, SI, MF, JG, IF, ED, LM, IT AND IT.

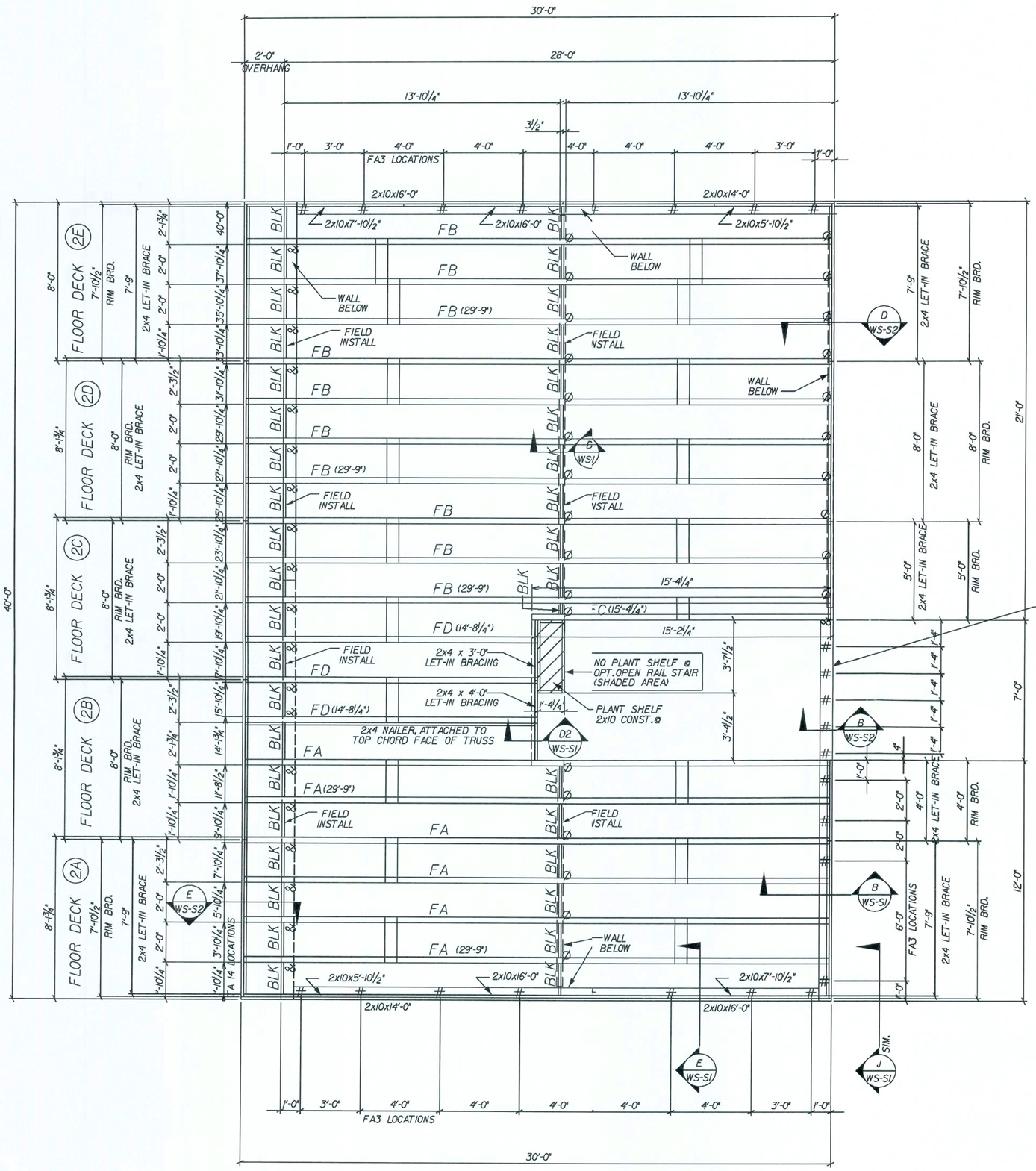

ERECTION/INSTALLATION NOTES

WARNING!:

THE ERECTION/INSTALLATION CONTRACTOR SHOULD PROVIDE ADEQUATE RIGGING (CRANE, TAGLINES, SPREADER BARS) FOR SUFFICIENT CONTROL DURING LIFTING AND PLACEMENT TO ASSURE SAFETY TO PERSONNEL AND TO PREVENT DAMAGE TO FLOOR DECK PANELS AND PROPERTY.

NOTE:

ALL FLOOR DECK PANELS UP TO 30': KEEP LINE ANGLE AT CRANING POINTS AT 60° OR LESS.

ALL FLOOR DECK PANELS 30' TO 60': ATTACH FLOOR DECK PANEL TO SPREADER BAR WITH LINES THAT SLOPE INWARD OR "TOE-IN". LINES THAT "TOE-OUT" COULD CAUSE FLOOR DECK PANEL TO BUCKLE.

FLOOR FRAMING NOTES:

9¼" DEEP WOOD FLOOR TRUSSES @ 24" O.C., U.N.O.

2x10 WOOD RIM BOARD

DESIGN LOADS:
TC LIVE LOAD = 40 psf
TC DEAD LOAD = 10 psf
BC DEAD LOAD = 5 psf
TOTAL LOAD = 55 psf

DEFLECTION:
LL = L/360
TL = L/240

ROOF LOADS ASSUMED TO BE BEARING ON PERIMETER WALLS ONLY.

FLOOR SHEATHING:
¾" T&G WOOD DECKING GLUED & NAILED w/ 7d x 2¼" SCREW SHANK NAIL @ 4" O.C. EDGES AND 8" O.C. FIELD (TYP.) or 16ga. x 1¾" STAPLE @ 2" O.C. EDGES AND 4" O.C. FIELD. SEE SHEET * FDO, GLUE MUST BE INCLUDED IN THE GROOVE OF EACH PANEL AND BTWN SHEATHING AND TRUSSES.

FLOOR CONNECTORS:

FA3, RIM BOARD CONNECTION DETAIL * B/WS-S1 & LADDER TRUSS CONNECTION DETAIL * E/WS-S1

Ø TYPICAL ATTACHMENT TO BEARING WALL w/ (2) 10d NAILS, TOE-NAILED. SEE DETAIL D/WS-S1

BLK SOLID WOOD FIRE BLOCKING SEE DETAIL F/WS-S1.

* LPTA, SEE DETAIL SHEET B/WS-S2

& TA14, SEE DETAIL SHEET E/WS-S2

REVISED 05-02-07 NAIL SPACING

FLOOR FRAMING:

ITEM	DESCRIPTION
RIM BRD.	2 x 10
FA - FD	9¼" WOOD TRUSS

FA3 @ STAIRWAY

ELEVATION G, I, J, L, M, R, T, V ONLY
ATTACH WALL TO BLOCK w/ FA3 @ 16" O.C.

ELEVATION H, S ONLY
INSTALL NO FA3

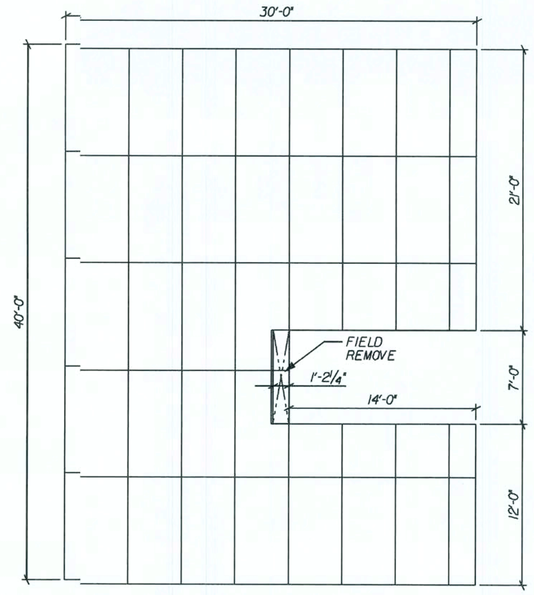

38 SHEETS - 4x8 SHEATHING

SECOND FLOOR SHEATHING LAYOUT

REVISIONS:
01-04-06 MOVED SBI @ BRG. WALL DECK A
02-15-06 REV. WOOD TRUSS FLOOR FRAM'G
09-28-06 ADDED RUNNING DIM'S FOR TA14
02/16/07 CHANGE LPTA'S TO FA3
04-24-07 REMOVED GABLE TRUSS
08-20-07 ADDED LET-IN BRACE
08-20-07 FIELD INSTALL FIRE BLOCKING
08-14-07 REV. CODE INFORMATION

COPYRIGHT © 2005 MARONDA HOMES

Maronda Homes
(407) 321-0064 4005 MARONDA WAY SANFORD, FLORIDA

FLORIDA: THIS STRUCTURE WAS DESIGNED IN ACCORDANCE AND MEETS THE REQUIREMENTS OF SECTION R301 OF THE INTERNATIONAL RESIDENTIAL CODE, 2004 FLORIDA 2006 SUPPLEMENT FOR 125 MPH - 3 SEC. GUST, I-HD. EXPOSURE B, ENCLOSED BUILDING. ALL CONNECTORS HAVE BEEN CHECKED TO WITHSTAND ALL APPLICABLE LOADS.

GEORGIA: THIS STRUCTURE WAS DESIGNED IN ACCORDANCE AND MEETS THE REQUIREMENTS OF SECTION R301 OF THE INTERNATIONAL RESIDENTIAL CODE, 2004 FLORIDA 2006 SUPPLEMENT FOR 125 MPH - 3 SEC. GUST, I-HD. EXPOSURE B, ENCLOSED BUILDING. ALL CONNECTORS HAVE BEEN CHECKED TO WITHSTAND ALL APPLICABLE LOADS.

g:\mlcv\sunsb\r\sunbury\borderright\sun-125.ft2

AMERICANA

SUNBURY

FRAMING PLAN

2nd FLOOR FRAMING PLAN

DRAWN BY: J. PITCOCK | GARAGE: RIGHT | 125 MPH

RELEASE DATE: 02/15/07

Maronda Systems
4005 Maronda Way
Sanford, FL 32771
(407)321-0064

Tomas Ponce P.E.
License No. 0050068

OCT 10 2007

SHEET: FDO

PLOT DATE: 27 AUG 2007 10:27:51

FLORIDA BUILDING CODE 2004 : RESIDENTIAL

THE DRAWINGS WE PRAMED BY USING THE FRAMEWAY WOOD SOFTWARE AND HAS BEEN REVIEWED BY SE, DS, ST, MF, JG, TP, EB, DR, TT AND TT.

GENERAL SECOND FLOOR NOTES:

ALL EXTERIOR WALLS SHALL BE CONSIDERED SHEAR WALLS MINUS ALL WINDOW AND DOOR OPENINGS.

EXTERIOR WALLS TO BE 4" THICK, CONSISTING OF 2x4 #2 S.Y.P. STUDS w/ 7/16" OSB SHEATHING, TYPICAL, U.N.O.

EXTERIOR OPENING DIMENSIONS ARE TO FACE OF ROUGH OPENING

INTERIOR NON-LOAD BEARING WALLS TO BE NOMINAL 3 5/8" MTL STUD, 25 ga. U.N.O.

PROVIDE SAFETY GLAZING AT: T = TEMPERED
- ALL WINDOWS OVER BATH TUBS.
- ALL WINDOWS WITHIN 24" OF A DOOR SWING.
- ALL SLIDING GLASS DOORS.
- ALL FIXED GLASS LITES OVER 30 SQ.FT.
- ALL LITES WITHIN 18" OF THE FLOOR AND IF LARGER THAN 9 SQ.FT.
- ALL SHOWER ENCLOSURES.

PROVIDE AFCIs (arc-fault circuit interrupters) IN ALL DWELLING UNIT BEDROOMS PER NEC, SECTION 210-12

ALL BEDROOM WINDOWS ARE CONSIDERED EGRESS UNLESS OTHERWISE NOTED

SEE SHEET # WL FOR WINDOW AND LINTEL SCHEDULES AND DETAILS

OPENING PRSSURES 125mph:

A: +28.15 / -30.55	B: +23.7 / -27.6
C: +28.15 / -37.7	D: +24.9 / -29.7

REVISED 02-09-05

TSH WINDOW HEADERS

4	3 1/2" x 4 3/8" TSH
8	3 1/2" x 8 5/8" TSH

REVISED 05-23-07

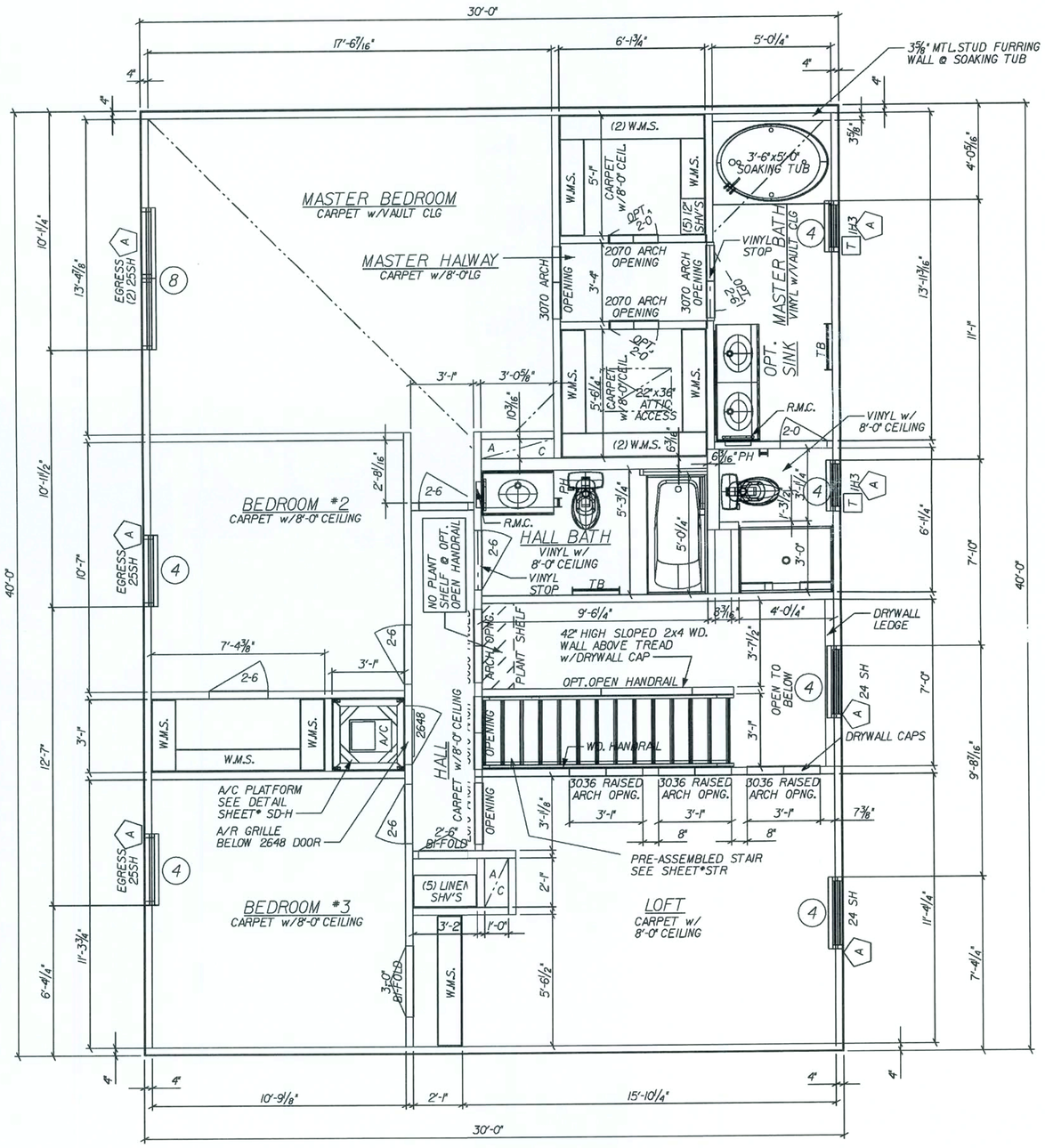

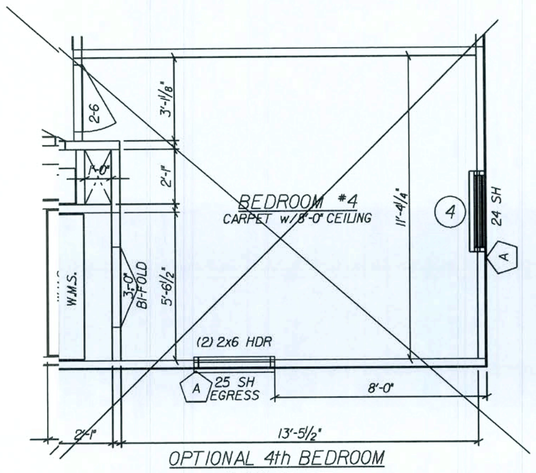

OPTIONAL 4th BEDROOM
IN LIEU OF LOFT

REVISIONS :	
05-16-06	REV. HEADER SIZES
05-17-06	REV. M.B. CLOSETS
09-22-06	REV. FRONT WINDOWS @ PORCH
03-07-07	REV. HEADERS TO TSH
05-23-07	REV. HEADER
08-24-07	REV. OPNG SIZE 3038 -> 3036
08-14-07	REV. CODE INFORMATION

COPYRIGHT © 2005 MARONDA HOMES

Maronda Homes

4005 MARONDA WAY SANFORD, FLORIDA
(407) 321-0064

FLORIDA: THIS STRUCTURE WAS DESIGNED IN ACCORDANCE AND MEETS THE REQUIREMENTS OF SECTION R301 OF THE FLORIDA BUILDING CODE 2004 : RESIDENTIAL AND 2005 SUPPLEMENT FOR 125 MPH. 3 SEC. GUST EXPOSURE B WITH ALL CONNECTORS HAVE BEEN CHECKED TO WITHSTAND ALL APPLICABLE LOADS.

GEORGIA: THIS STRUCTURE WAS DESIGNED IN ACCORDANCE AND MEETS THE REQUIREMENTS OF SECTION R301 OF THE INTERNATIONAL RESIDENTIAL CODE 2006 : FOR 125 MPH. 3 SEC. GUST. HO. EXPOSURE B. ALL CONNECTORS HAVE BEEN CHECKED TO WITHSTAND ALL APPLICABLE LOADS.

p:\houses_05\sunbury\125\sunr-125.004

AMERICANA

SECOND FLOOR PLAN

SUNBURY

ELEVATION "V"

DRAWN BY: GARAGE: RIGHT

RELEASE DATE: 03-20-06 125 MPH

10:27:53

Maronda Systems
4005 Maronda Way
Sanford, FL 32771
(407)321-0064

Tomas Ponce P.E.
License No. 0050068

OCT 10 2007

SHEET: 4V

PLOT DATE: 27 AUG 2007

FLORIDA BUILDING CODE 2004 : RESIDENTIAL

THIS DRAWING WAS CREATED BY USING THE AMERICAN WOOD SOFTWARE AND HAS BEEN REVIEWED BY SE, US, SI, MF, JS, IF, EG, LM, LI AND II.

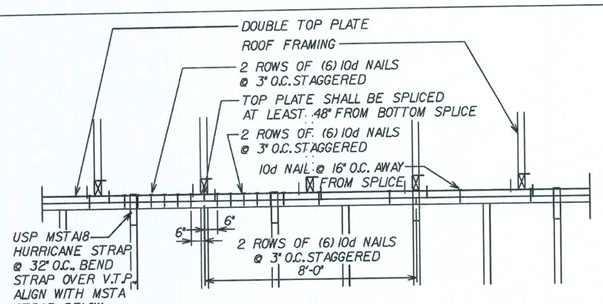

DBL. TOP PLATE SPLICE CONN.

REVISED 02-15-07 : MSTA18 STRAP

SCALE: N.T.S.

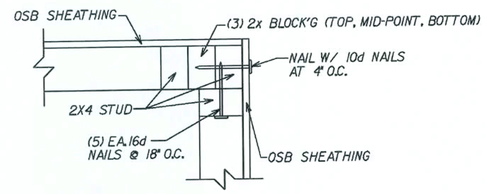

B TOP CORNER DETAIL

SCALE: N.T.S.

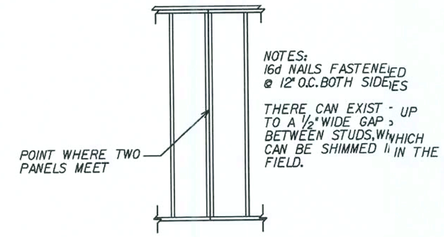

NOTES:
16d NAILS FASTENED @ 12" O.C. BOTH SIDES

THERE CAN EXIST UP TO A 1/2" WIDE GAP BETWEEN STUDS, WHICH CAN BE SHIMMED IN THE FIELD.

A WALL JOINT DETAIL

SCALE: N.T.S.

WALL STRAP KEY

(UNDER SHEATHING)

- S1 - RSPT4

(ON TOP OF SHEATHING)

- S2 - MSTA12 (BENT)
- S3 - MSTA18
- S4 - MP6F
- S5 - MSTA30
- S6 - MSTA24

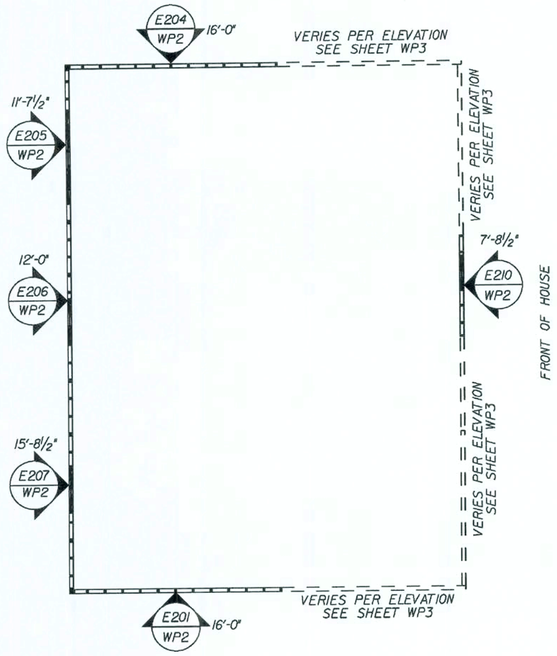

SECOND FLOOR WALL PANEL LAYOUT

ALL ELEVATIONS

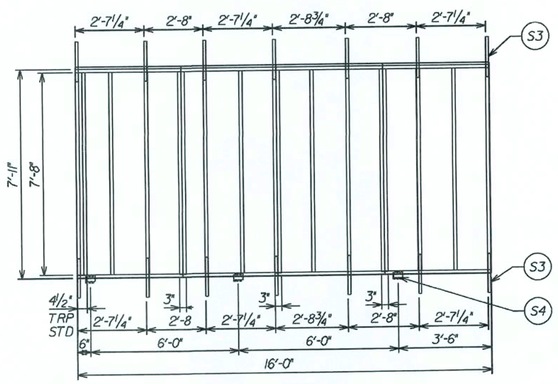

PANEL E201

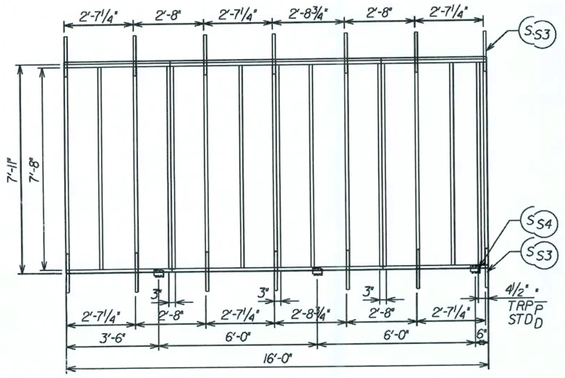

PANEL E204

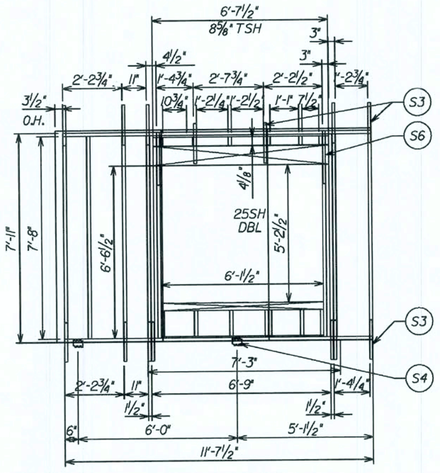

PANEL E205

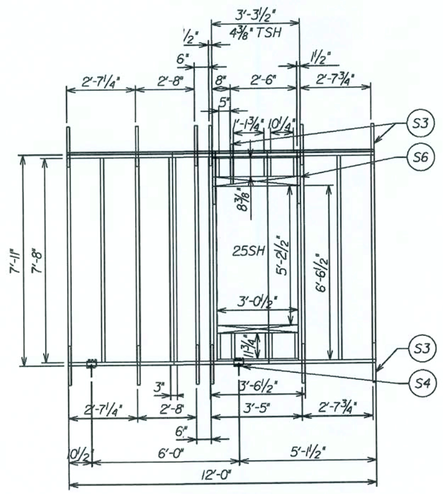

PNEL E206

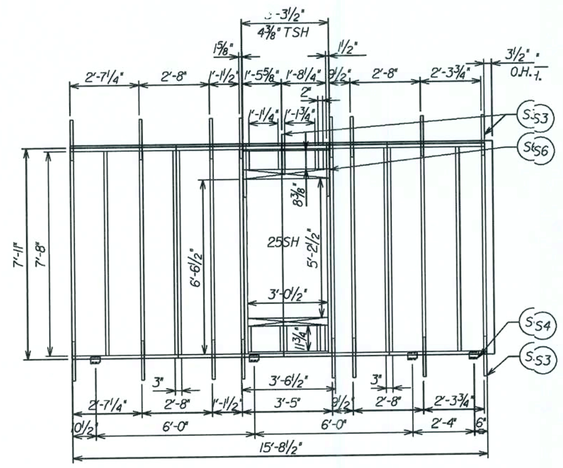

PANEL E207

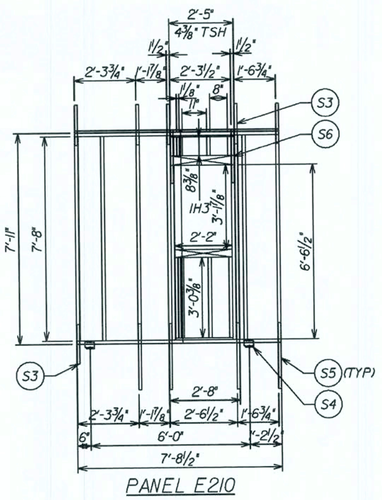

PANEL E210

REVISIONS :

COPYRIGHT © 2005 MARONDA HOMES

Maronda Homes

(407) 321-0064 4005 MARONDA WAY SANFORD, FLORIDA

AMERICANA | WALL PANEL LAYOUT

SUNBURY

ALL ELEVATIONS

DRAWN BY: J. LEHNER | GARAGE: RIGHT

RELEASE DATE: 6/28/2007

Maronda Systems
4005 Maronda Way
Sanford, FL 32771
(407)321-0064

Tomas Ponce P.E.
License No. 0050068

OCT 10 2007

SHEET:

WP2

PLOT DATE: 27 AUG 2007 10:27:54

gvintocthousesv1\sunbury\borderv1right\sunbury-std.wp2

05

FLORIDA BUILDING CODE 2004 : RESIDENTIAL

IS DRAWING WAS CREATED BY USING THE AMERICAN WOOD SOFTWARE AND HAS BEEN REVIEWED BY US, US, US, MF, JG, IF, CD, UP, AND IT.

WALL STRAP KEY

(UNDER SHEATHING)

- (S1) - RSPT4

(ON TOP OF SHEATHING)

- (S2) - MSTA12 (BENT)
- (S3) - MSTA18
- (S4) - MP6F
- (S5) - MSTA30
- (S6) - MSTA24

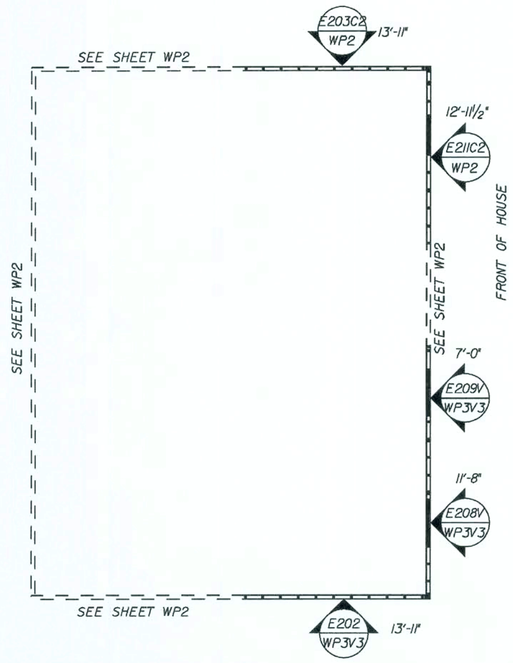

SECOND FLOOR WALL PANEL LAYOUT

ELEVATION "V" 3 BEDROOM

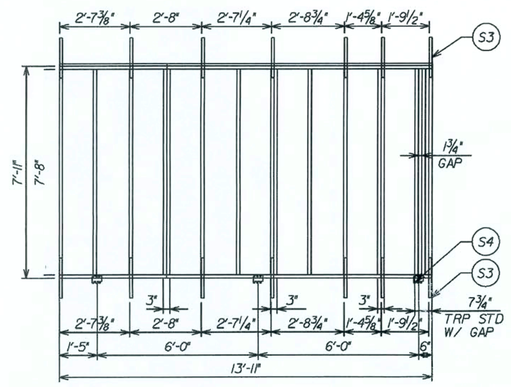

PANEL E202

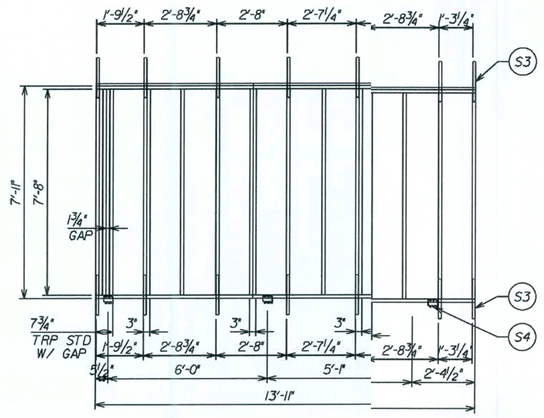

PANEL E203C2a

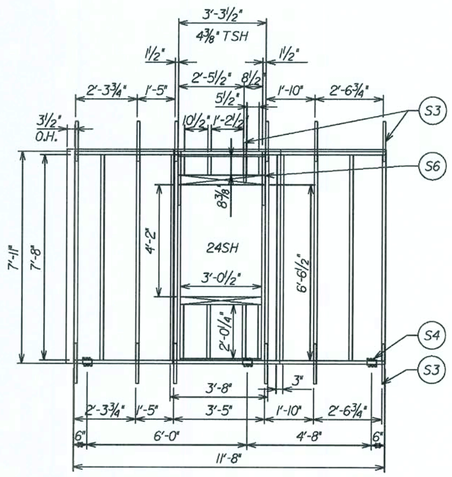

PANEL E208V

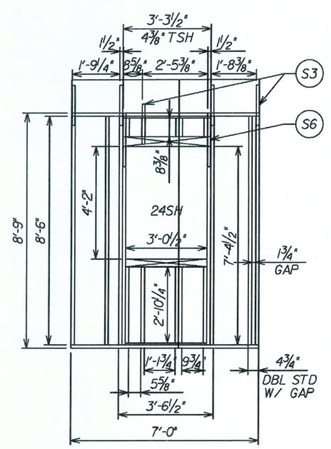

PANEL E209V

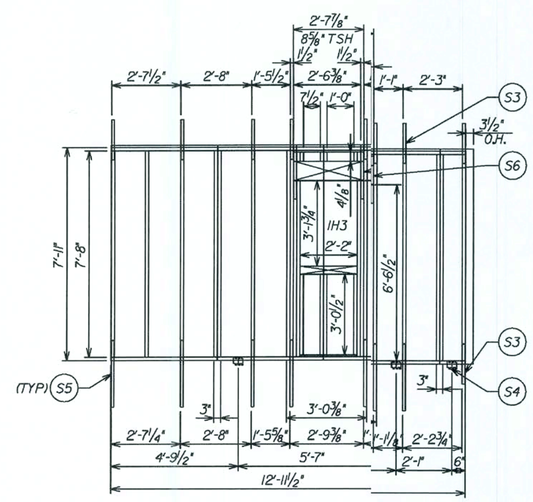

PANEL E211C2

REVISIONS :

COPYRIGHT © 2005 MARONDA HOMES

Maronda Homes

(407) 321-0064 4005 MARONDA WAY SANFORD, FLORIDA

AMERICANA | WALL PANEL LAYOUT

SUNBURY

ELEVATION ""V" 3 BEDROOM

DRAWN BY: E.JONES | GARAGE: RIGHT

RELEASE DATE: 01/23/07

Maronda Systems
4005 Maronda Way
Sanford, FL 32771
(407)321-0064

Tomas Ponce P.E.
License No. 0050068

OCT 10 2007

SHEET:

WP3

05

g:\mlcc\houses\f\sunbury\border\v1right\v3bed.wp3

10:27:54

PLOT DATE: 27 AUG 2007

FLORIDA BUILDING CODE 2004 : RESIDENTIAL

THIS DRAWING WAS PRINTED BY USING THE AMERICAN VISION SOFTWARE AND HAS BEEN REVIEWED BY SC, US, SI, MF, VS, IF, CO, UP, II AND II.

WALL STRAP KEY

(UNDER SHEATHING)

- (S1) - RSPT4

(ON TOP OF SHEATHING)

- (S2) - MSTAI2 (BENT)
- (S3) - MSTAI8
- (S4) - MP6F
- (S5) - MSTA30
- (S6) - MSTA24

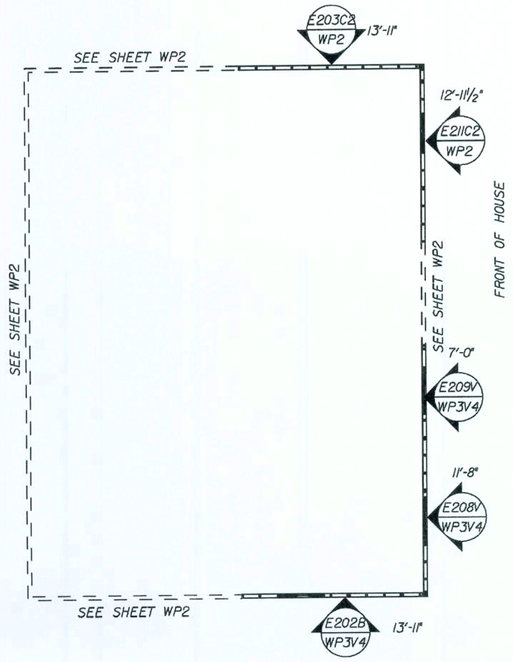

SECOND FLOOR WALL PANEL LAYOUT

ELEVATION "V" 4 BEDROOM

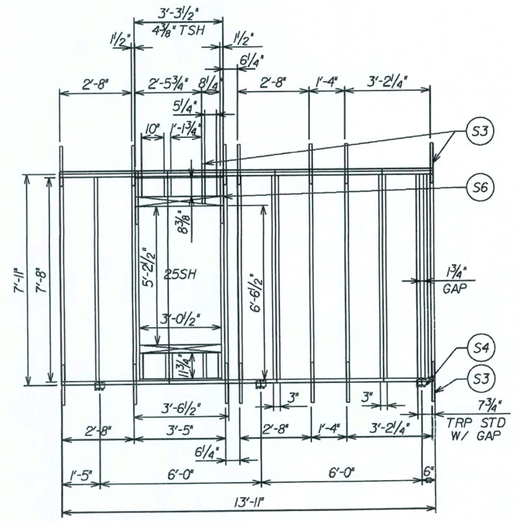

PANEL E202B

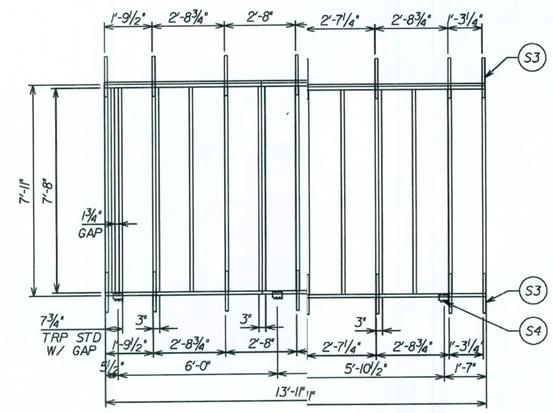

PANEL E203C2

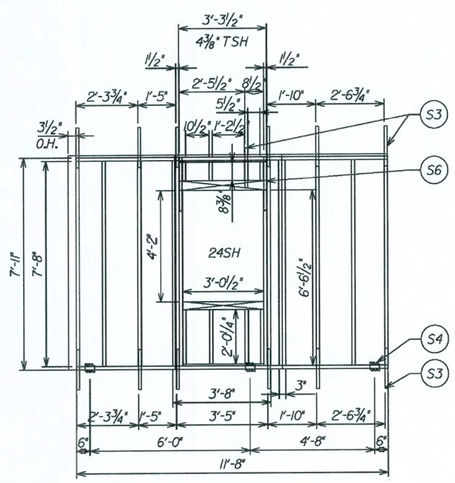

PANEL E208V

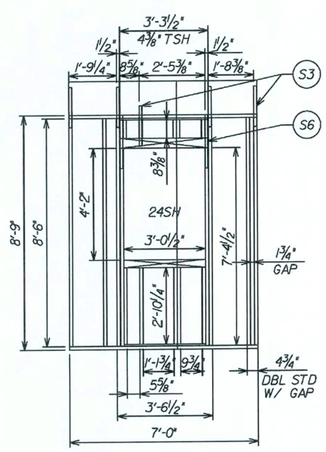

PANEL E209V

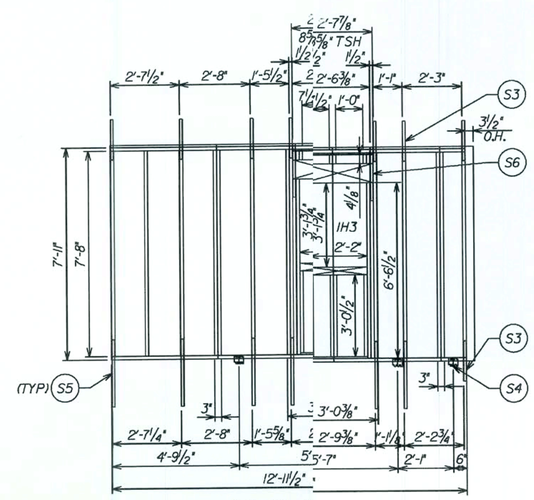

PANEL E211C2

FLORIDA BUILDING CODE 2004 : RESIDENTIAL

REVISIONS :

COPYRIGHT © 2005 MARONDA HOMES

Maronda Homes

(407) 321-0064 4005 MARONDA WAY SANFORD, FLORIDA

05

g:\mfcc\houses\f\sunbury\border\rgh\v4bed.wp3

AMERICANA | WALL PANEL LAYOUT

SUNBURY

ELEVATION "V" 4 BEDROOM

DRAWN BY: E.JONES | GARAGE: RIGHT

RELEASE DATE: 01/23/07

10:27:55

Maronda Systems
4005 Maronda Way
Sanford, FL 32771
(407)321-0064

Tomas Ponce P.E.
License No. 0050068

OCT 10 2007

SHEET:

WP3

PLOT DATE: 27 AUG 2007

THIS DRAWING WAS PRINTED BY USING THE 1 AMERICAN VIVOS SOFTWARE AND HAS BEEN REVIEWED BY SE, US, SI, MF, JG, IT, ED, UT, 11 AND 11.

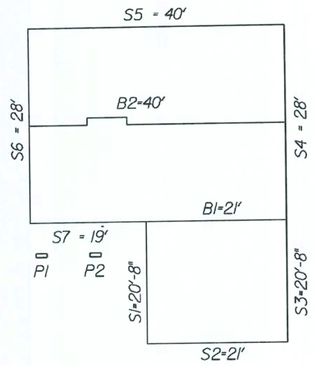

FIRST FLOOR

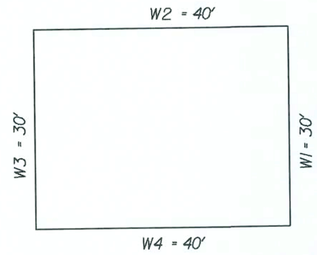

SECOND FLOR

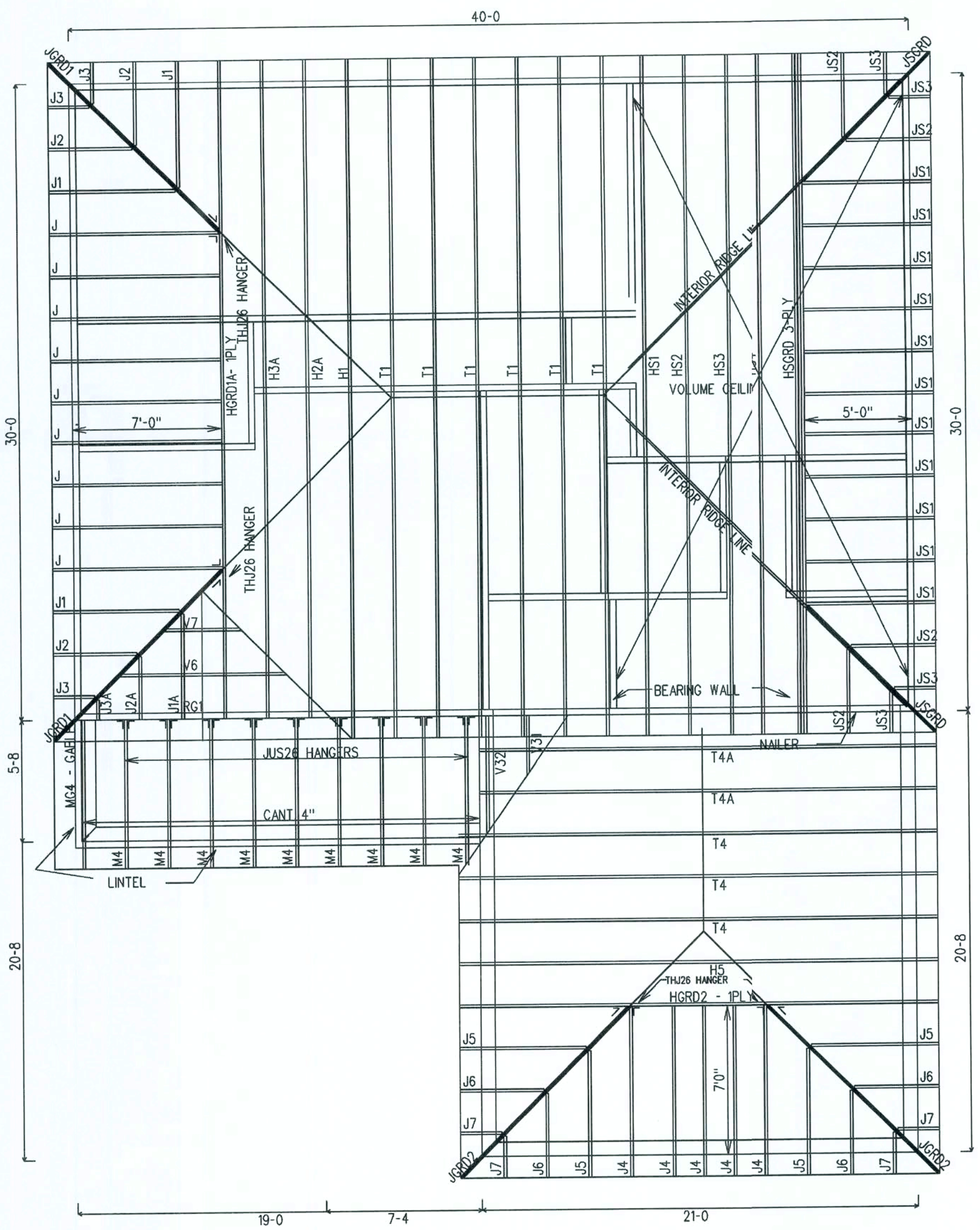

STRUCTURAL WALL SCHEDULE

WALL ID	STUD		OVERTURN ANCHOR - APPLIED AT CORNERS & BOTH SIDES OF OPENINGS			WALL TO SLAB		TOP & BOTTOM OF STUD TO PLATE		SHEARWALL SHEATHING	
	SIZE & GRADE	SPACING	PRODUCT CODE	BOLT TO SLAB SIZE	SPECIAL NOTES	PRODUCT CODE	SPACING	PRODUCT CODE	SPACING	TYPE	NAIL SIZE &SPACING
S1 - S7	8" CMU	–	–	–		–	–	–	–	–	–
P1, P2	8" CMU	–	–	–		–	–	–	–	–	–
B1	2 x 4 #2 SYP	16" O.C.	–	–	MID-WALL BLOCKING REQUIRED	MTS27B w/ (1)3/4" ANCHOR BOLT	SEE FLR. PLAN NOTE	RT3	BOT. OF EA.STUD	1/2" GYP. WALL BRD.	#6 x 1 1/4" SCREWS 4" O.C. EDGE, 12" O.C. INTERM.
B2	2 x 4 #2 SPF	16" O.C.	–	–	NO BLOCKING REQUIRED	1/2"x5 1/4" SUP-R-STUD W/ WEST PALM	48" O.C.	–	–	–	–
W1 - W4	2 x 4 #2 SYP	16" O.C.	MSTA18	–	SEE DETAILS SHEET	–	–	RT5	TOP OF EA.STUD	7/16" O.S.B. EXT. SIDE	8d NAILS 4" O.C. EDGE, 6" O.C. FIELD

TPI-02 TRUSS HARDWARE SCHEDULE 160%

TRUSS ID	TRUSS TYPE	QUAN.	UPLIFT LEFT	UPLIFT MID	UPLIFT RIGHT	LEFT STRAP TYPE	LEFT STRAP MAX. UPLIFT	FASTENERS	MID STRAP TYPE	MID STRAP MAX. UPLIFT	FASTENERS	RIGHT STRAP TYPE	RIGHT STRAP MAX. UPLIFT	FASTENERS
H1	HIP	1	674	—	674	RT16	1030	TOP PLATES (8) 8d; TRUSS (8) 8d x 1 1/2"	—	—	—	RT16	1030	TOP PLATES (8) 8d; TRUSS (8) 8d x 1 1/2"
H2A	HIP	1	617	—	691	RT16	1030	TOP PLATES (8) 8d; TRUSS (8) 8d x 1 1/2"	—	—	—	RT16	1030	TOP PLATES (8) 8d; TRUSS (8) 8d x 1 1/2"
H3A	HIP	1	627	—	701	RT16	1030	TOP PLATES (8) 8d; TRUSS (8) 8d x 1 1/2"	—	—	—	RT16	1030	TOP PLATES (8) 8d; TRUSS (8) 8d x 1 1/2"
H5	HIP	1	537	—	537	TA 18	1205	(8) 10d X 1 1/2"	—	—	—	TA 18	1205	(8) 10d X 1 1/2"
HGRD1A	1-PLY HIP GIRDER	1	787	—	921	RT16	1030	TOP PLATES (8) 8d; TRUSS (8) 8d x 1 1/2"	—	—	—	RT16	1030	TOP PLATES (8) 8d; TRUSS (8) 8d x 1 1/2"
HGRD2	1-PLY HIP GIRDER	1	675	—	675	TA 18	1205	(8) 10d X 1 1/2"	—	—	—	TA 18	1205	(8) 10d X 1 1/2"
HS1	HIP SCISSOR	1	671	—	671	RT16	1030	TOP PLATES (8) 8d; TRUSS (8) 8d x 1 1/2"	—	—	—	RT16	1030	TOP PLATES (8) 8d; TRUSS (8) 8d x 1 1/2"
HS2	HIP SCISSOR	1	692	—	692	RT16	1030	TOP PLATES (8) 8d; TRUSS (8) 8d x 1 1/2"	—	—	—	RT16	1030	TOP PLATES (8) 8d; TRUSS (8) 8d x 1 1/2"
HS3	HIP SCISSOR	1	702	—	702	RT16	1030	TOP PLATES (8) 8d; TRUSS (8) 8d x 1 1/2"	—	—	—	RT16	1030	TOP PLATES (8) 8d; TRUSS (8) 8d x 1 1/2"
HS4	HIP SCISSOR	1	711	—	711	RT16	1030	TOP PLATES (8) 8d; TRUSS (8) 8d x 1 1/2"	—	—	—	RT16	1030	TOP PLATES (8) 8d; TRUSS (8) 8d x 1 1/2"
HSGRD	3-PLY HIP GIRDER	1	681	—	680	(2)LTW12	1340	(12) 10d	—	—	—	(2)LTW12	1340	(12) 10d
J	END JACK	9	501	129	197	RT5	540	(4) 8d TRUSS; (4) 8d PLATE	—	—	—	16d NAILS		3 / 2
J1	CORNER JACK	3	393	274	45	RT5	540	(4) 8d TRUSS; (4) 8d PLATE	—	—	—	16d NAILS		3 / 2
J1A	CORNER JACK	1	305	281	46	RT5	540	(4) 8d TRUSS; (4) 8d PLATE	—	—	—	16d NAILS		3 / 2
J2	CORNER JACK	3	279	169	27	RT5	540	(4) 8d TRUSS; (4) 8d PLATE	—	—	—	16d NAILS		2 / 2
J2A	CORNER JACK	1	142	132	20	RT5	540	(4) 8d TRUSS; (4) 8d PLATE	—	—	—	16d NAILS		2 / 2
J3	CORNER JACK	3	70	—	13	RT5	540	(4) 8d TRUSS; (4) 8d PLATE	—	—	—	16d NAILS		2 / 2
J3A	CORNER JACK	1	47	45	5	RT5	540	(4) 8d TRUSS; (4) 8d PLATE	—	—	—	16d NAILS		2 / 2
J4	END JACK	5	501	129	197	TA 18	1205	(8) 10d X 1 1/2"	—	—	—	16d NAILS		3 / 3
J5	CORNER JACK	4	393	274	45	TA 18	1205	(8) 10d X 1 1/2"	—	—	—	16d NAILS		3 / 2
J6	CORNER JACK	4	279	169	27	TA 18	1205	(8) 10d X 1 1/2"	—	—	—	16d NAILS		2 / 2
J7	CORNER JACK	4	158	58	7	TA 18	1205	(8) 10d X 1 1/2"	—	—	—	16d NAILS		2 / 2
JGRD1	KING JACK	2	592	—	325	HHCP2	800	(10) 10d X 1 1/2" TRUSS; (10) 10d X 1 1/2" PLATE	—	—	—	THJ26 2	1010	H1P(7)10d-HEADER(16)16d JACK (5) 10d x1 1/2"
JGRD2	HIP JACK	2	592	—	325	TA 18	1205	(8) 10d X 1 1/2"	—	—	—	THJ26 2	1010	H1P(7)10d-HEADER(16)16d JACK (5) 10d x1 1/2"
JS1	END JACK	11	389	274	46	RT5	540	(4) 8d TRUSS; (4) 8d PLATE	—	—	—	16d NAILS		3 / 2
JS2	CORNER JACK	4	233	131	20	RT5	540	(4) 8d TRUSS; (4) 8d PLATE	—	—	—	16d NAILS		2 / 2
JS3	CORNER JACK	4	174	63	13	RT5	540	(4) 8d TRUSS; (4) 8d PLATE	—	—	—	16d NAILS		2 / 2
JSGRD	KING JACK	2	528	—	246	HHCP2	800	(10) 10d X 1 1/2" TRUSS; (10) 10d X 1 1/2" PLATE	—	—	—	16d NAILS		3 / 2
M4	END JACK	9	494	—	413	TA 18	1205	(8) 10d X 1 1/2"	—	—	—	16d NAILS		2 / 2
MG4	GABLE	1	315	—	19	LPTA @ 4'-0" O.C.	1205	(8) 10d X 1 1/2"	—	—	—	JUS26	1115	(4) 10d HEADER; (4) 10d TRUSS
T1	COMMON	6	645	—	645	RT16	1030	TOP PLATES (8) 8d; TRUSS (8) 8d x 1 1/2"	—	—	—	RT16	1030	TOP PLATES (8) 8d; TRUSS (8) 8d x 1 1/2"
T4	COMMON	3	516	—	516	TA 18	1205	(8) 10d X 1 1/2"	—	—	—	TA 18	1205	(8) 10d X 1 1/2"
T4A	COMMON	2	419	—	516	TA 18	1205	(8) 10d X 1 1/2"	—	—	—	TA 18	1205	(8) 10d X 1 1/2"
V	VALLEY TRUSS SET				LTW12 @ 48" O.C.		670	(12) 10d						*TOP NAILS / *BOTTOM NAILS

ALL HARDWARE MANUFACTURED BY USP XXXX

ALL HARDWARE MANUFACTURED BY SIMPSON XXXX [1]

ALL HARDWARE MANUFACTURED BY CLEVELAND XXXX [2]

GENERAL TRUSS NOTES:

1. INFORMATION BASED ON 125 mph WINDLOAD, ALL PRESSURES WERE CALCULATED USING COMPONENTS AND CLADDING
2. ROOF TRUSS LOADING:
   - 16 psf TOP CHORD LL
   - 7 psf TOP CHORD DL
   - 10 psf BOTTOM CHORD LL
   - 10 psf BOTTOM CHORD DL
   - 43 psf TOTAL LOAD
3. PROVIDE TRUSS BRACING PER TRUSS ENGINEERING & TPI HIB-91

REVISED 2-25-05

FLORIDA BUILDING CODE 2004 : RESIDENTIAL

REVISIONS :

08-14-07 REV. CODE INFORMATION

Maronda Homes

(407) 321-0064 4005 MARONDA WAY SANFORD, FLORIDA

COPYRIGHT © 2005 MARONDA HOMES

FLORIDA:
THIS STRUCTURE WAS DESIGNED IN ACCORDANCE AND MEETS THE REQUIREMENTS OF FLORIDA BUILDING CODE, SECTION R301 OF THE INTERNATIONAL RESIDENTIAL CODE 2006 : FOR 125 MPH - 3 SEC. GUST, HD. EXPOSURE B, ENCLOSED BUILDING. ALL CONNECTORS HAVE BEEN SELECTED TO WITHSTAND ALL APPLICABLE LOADS.

GEORGIA:
THIS STRUCTURE WAS DESIGNED IN ACCORDANCE AND MEETS THE REQUIREMENTS OF SECTION R301 OF THE INTERNATIONAL RESIDENTIAL CODE 2006 : FOR 125 MPH - 3 SEC. GUST, HD. EXPOSURE B, ENCLOSED BUILDING. ALL CONNECTORS HAVE BEEN SELECTED TO WITHSTAND ALL APPLICABLE LOADS.

AMERICANA

INFO SHEET

SUNBURY

ELEVATION "V"

GARAGE: RIGHT

DRAWN BY: 125 MPH

RELEASE DATE: 03-20-06

10:27:55

p:\fnxhouses_05\sunbury\v25\sunv4out1-125.tr1

Maronda Systems
4005 Maronda Way
Sanford, FL 32771
(407)321-0064

Tomas Ponce P.E.
License No. 0050068

OCT 10 2007

SHEET:

TR1

VAULT

PLOT DATE: 27 AUG 2007

THIS DRAWING WAS PRINTED BY USING THE AMERICAN VIVOS SOFTWARE AND HAS BEEN REVIEWED BY SE, DS, SI, MF, JG, IF, ED, UP, LT AND LT.

GENERAL ROOF NOTES:

7/16" OSB SHT'G w/ 8d RING/SCREW SHANK NAIL (AS PER R803.2.3.1) 4" O.C. EDGE & 6" O.C. FIELD, (3" O.C. @ GABLE END TRUSS) w/ CLIPS ON PRE-ENGINEERED TRUSSES @ 24" O.C.

REVISED 05-07-07

TOTAL ROOF SHEATHING:

52 [MAIN] + 26 [GARAGE] = 78

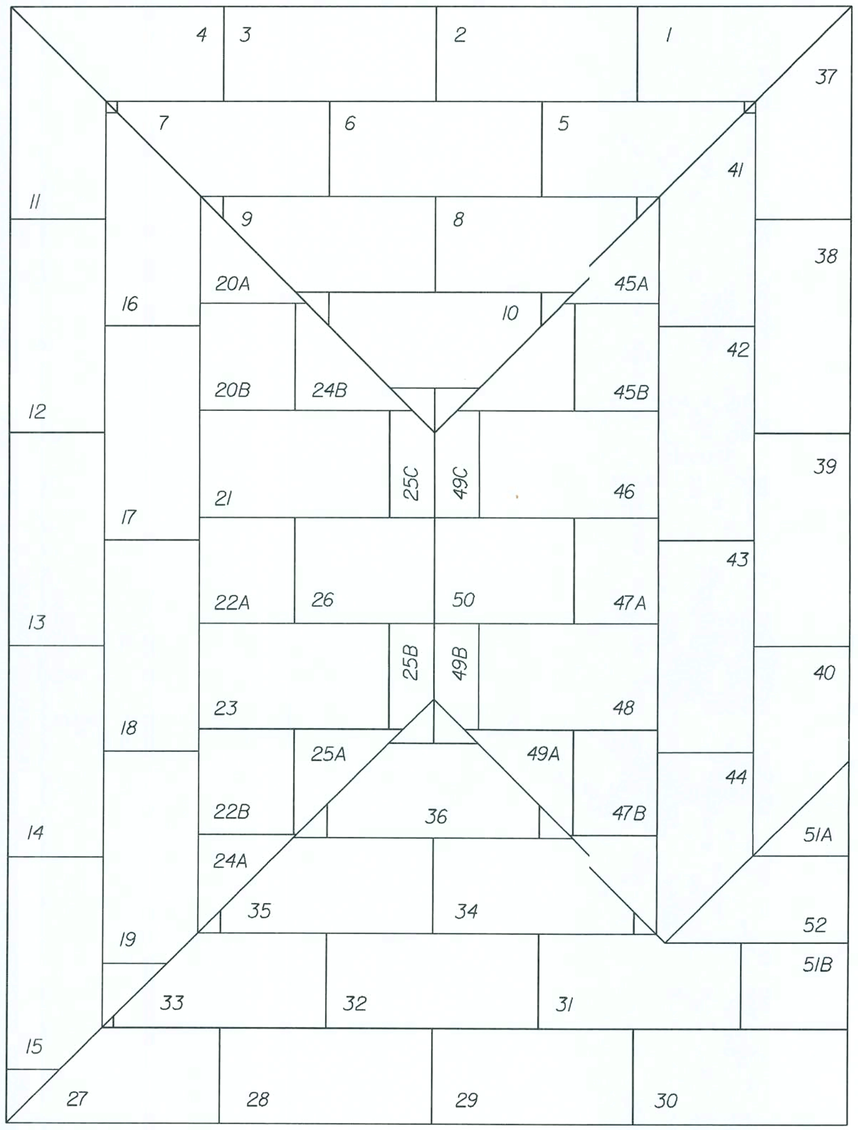

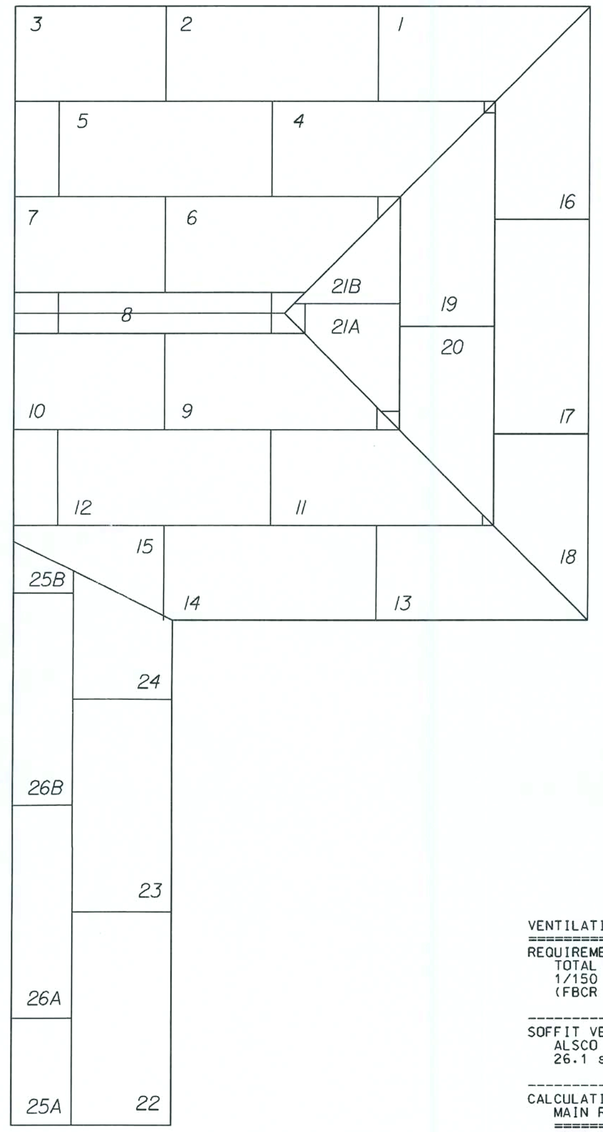

VENTILATION OF ATTIC SPACE: SUNBURY 3V

REQUIREMENTS:
TOTAL NET FREE VENTILATION AREA SHALL NOT BE LESS THAN 1/150 OF THE AREA OF SPACE VENTILATED.
(FBCR 2004, SECTION R806.2)

SOFFIT VENTILATION:
ALSCO - QUAD 4 VENTED SOFFIT (16" WIDE) = 26.1 si/LF
26.1 si / 1.34' = 19.5 si/LF PER 12" wide soffit

CALCULATIONS:
MAIN ROOF
1200 SF / 150 = 8.0 SF VENTILATION REQUIRED

SOFFIT: 128 L.F. SOFFIT VENT
128 LF @ 19.5 si/LF = 2496.0 si
2496.0 si / 144 si PER SF = 17.33 SF ACTUAL

GARAGE ROOF
434 SF / 150 = 2.89 SF VENTILATION REQUIRED

SOFFIT: 58 L.F. SOFFIT VENT
58 LF @ 19.5 si/LF = 1131.0 si
1131.0 si / 144 si PER SF = 7.85 SF ACTUAL

NOTE:
SOFFIT ALONE SATISFIES FBCR 2004. RIDGE AND OFF-RIDGE VENTS SHOWN ON THE ELEVATION SHEET ARE TO BE INSTALLED AND ACT AS INCREASED VENTILATION ABOVE AND BEYOND THE CODE REQUIREMENTS.

REVISIONS :
06-13-06 REV. ATTIC VENTILATION CALCS.

COPYRIGHT © 2005 MARONDA HOMES

Maronda Homes
(407) 321-0064 4005 MARONDA WAY SANFORD, FLORIDA

FLORIDA:
THIS STRUCTURE WAS DESIGNED IN ACCORDANCE AND MEETS THE REQUIREMENTS OF THE FLORIDA BUILDING CODE 2004 : RESIDENTIAL AND2005, 2006 SUPPLEMENT

GEORGIA:
THIS STRUCTURE WAS DESIGNED IN ACCORDANCE AND MEETS THE REQUIREMENTS OF THE INTERNATIONAL RESIDENTIAL CODE 2006

AMERICANA ROOF LAYOUT

SUNBURY

ELEVATION "V"

GARAGE: RIGHT

DRAWN BY:

RELEASE DATE: 03-20-06

SHEET: RS/V

PLOT DATE: 27 AUG 2007 10:27:56

p:\N houses_05\sunbury\std\sunv.rsl

FLORIDA BUILDING CODE 2004 : RESIDENTIAL

THIS DRAWING WAS PRINTED BY USING THE AMERICAN VIVIDS SOFTWARE AND HAS BEEN REVIEWED BY JE, DS, JI, MF, JG, IT, EG, DT, IT AND II.

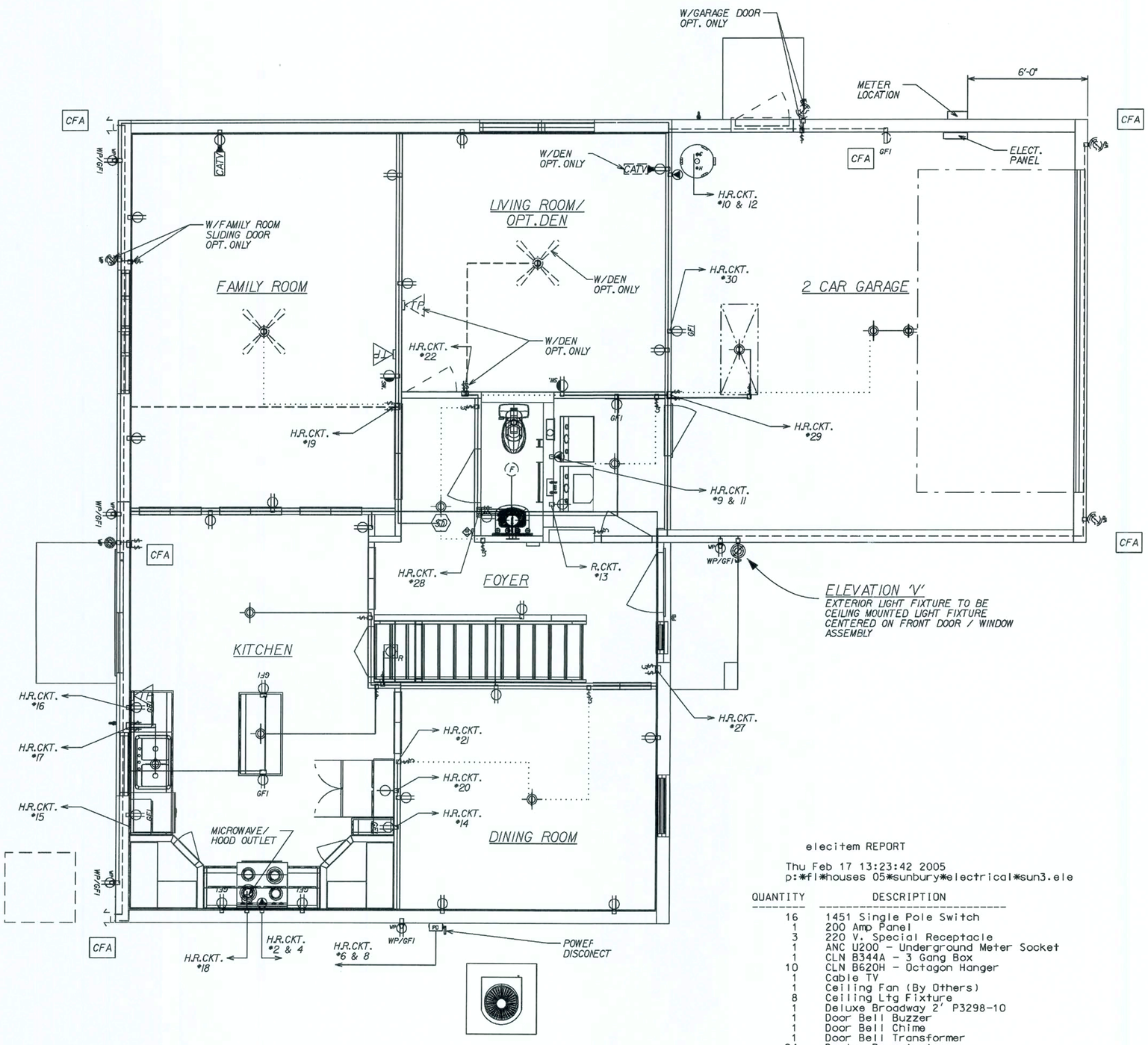

GENERAL ELECTRICAL NOTES:

CIRCUITRY IS DIAGRAMATIC ONLY, FIELD CONDITIONS MAY CHANGE ACTUAL INSTALLATION.

PROVIDE AFCIs (arc-fault circuit interrupters) IN ALL DWELLING UNIT BEDROOMS PER NEC, SECTION 210J2

SMOKE DETECTORS ARE INSTALLED PER MFG. INSTRUCTIONS AND NFPA 72. ALL DEVICES SHALL BE INTERCONNECTED WITH BATTERY BACK-UP.

FOR INSTALLATION OF GROUND ROD, SEE TYP. CONC.ENCASED ELECTRODE DETAIL SHEET* FTG

REVISED 10-05-06

LIST OF OPTIONS:

CFA	OPTIONAL COACH LIGHTS, (2) FLOOD LIGHTS AT REAR AND GARAGE OUTLET REVISED 11-18-05
GSD	OPTIONAL DOOR LIGHT REVISED 11-18-05

ELECTRICAL SYMBOL LEGEND:

REGULAR TEXT	REVERSE TEXT	DESCRIPTION
PD	PD	Power Disconnect Switch
		Door Bell Chime
		Door Bell Buzzer
		Ceiling Fan (By Others)
SD	SD	Smoke Detector
		Light Fixture Bath
		Exterior WP Lamp
		Single Pole Switch
		Three Way Switch
		Single Receptacle
		Duplex Receptacle
GFI	GFI	GFI Receptacle
SW.	SW.	Switched Receptacle
		220 V. Special Receptacle
		Ceiling Ltg Fixture
R	R	Recessed Ltg. Fixture
F	F	Exhaust Fan
CATV	CATV	Cable TV
TP	TP	Telephone Outlet
		Flood Lights
F		Exhaust Fan / Light Combo

REVISED 03-19-07

COPYRIGHT © 2005 MARONDA HOMES

REVISIONS :
12-19-06 ELIM. SMOKE DETECT. HOME RUN.
1-29-07 MOVE PWR.DS.TO A/C UNIT & GFI
02-19-07 ADD SMOKE DETECTOR TO MASTER BEDROOM

Maronda Homes
4005 MARONDA WAY SANFORD, FLORIDA
(407) 321-0064

AMERICANA | 1st. FLR. ELECTRICAL

SUNBURY-NEWBERRY

3 BEDROOM

GARAGE: RIGHT

DRAWN BY:

RELEASE DATE: / /

05

p:\fl\houses_05\sunbury\electrical\sun3.ele

15:23:32

PLOT DATE: 22 MAR 2007

SHEET: E1

elecitem REPORT

Thu Feb 17 13:23:42 2005
p:*fl*houses 05*sunbury*electrical*sun3.ele

QUANTITY	DESCRIPTION
16	1451 Single Pole Switch
1	200 Amp Panel
3	220 V. Special Receptacle
1	ANC U200 - Underground Meter Socket
1	CLN B344A - 3 Gang Box
10	CLN B620H - Octagon Hanger
1	Cable TV
1	Ceiling Fan (By Others)
8	Ceiling Ltg Fixture
1	Deluxe Broadway 2' P3298-10
1	Door Bell Buzzer
1	Door Bell Chime
1	Door Bell Transformer
24	Duplex Receptacle
1	Exhaust Fan
1	Front Door WP Lamp
4	G.F.I. Receptacle
1	H-7T-Rec Lht
5	MMWPRC MULTI-MAC MM400C-B WEATHER PROOF RECEPTICAL COVER
1	Power Disconnect Switch
52	RAC 7302 - 1 Gang BoX
5	RAC 7835 - 2 Gang Box
1	Rear Door WP Lamp
3	Single Receptacle
1	Smoke Detector
2	Switched Receptacle
2	Telephone Outlet
7	Three Way Switch

elecinth REPORT

Thu Feb 17 13:23:42 2005
p:*fl*houses 05*sunbury*electrical*sun3.ele

QUANTITY	DESCRIPTION
142'	10 Gauge/3 Cond. Copper
487'	12 Gauge/2 Cond. Copper
1276'	14 Gauge/2 Cond. Copper
200'	14 Gauge/3 Cond. Copper
135'	6 Gauge/3 Cond. Copper

FLORIDA BUILDING CODE 2004 : RESIDENTIAL

ELECTRICAL LOAD CALCULATIONS

11/28/06

MODEL: SUNBURY / NEWBERRY

		VOLT/AMPS
LARGEST LOAD:HEAT PUMPW/SUPPLEMENTAL HEAT		**10270**
SQUARE FEET LIVING AREA	**2223** @ 3 VOLT/AMPS	6669
SMALL APPLIANCE CIRCUITS		3000
LAUNDRY CIRCUIT		1500
OVEN		11700
WATER HEATER		4500
DISHWASHER		1500
DRYER		5000
DISPOSAL		500
TOTAL LOAD		**34369**

FIRST 10KVA @100%	10000
REMAINDER @40%	9747.6
LARGEST LOAD	10270

TOTAL LOAD **30018** V.A./240 VOLTS= **125** AMPS

SERVICE SIZE: 150 AMPS

NOTE: HEAT PUMPS ARE CALCULATED AT 100% WITH SUPPLIMENTAL HEAT AT 100%

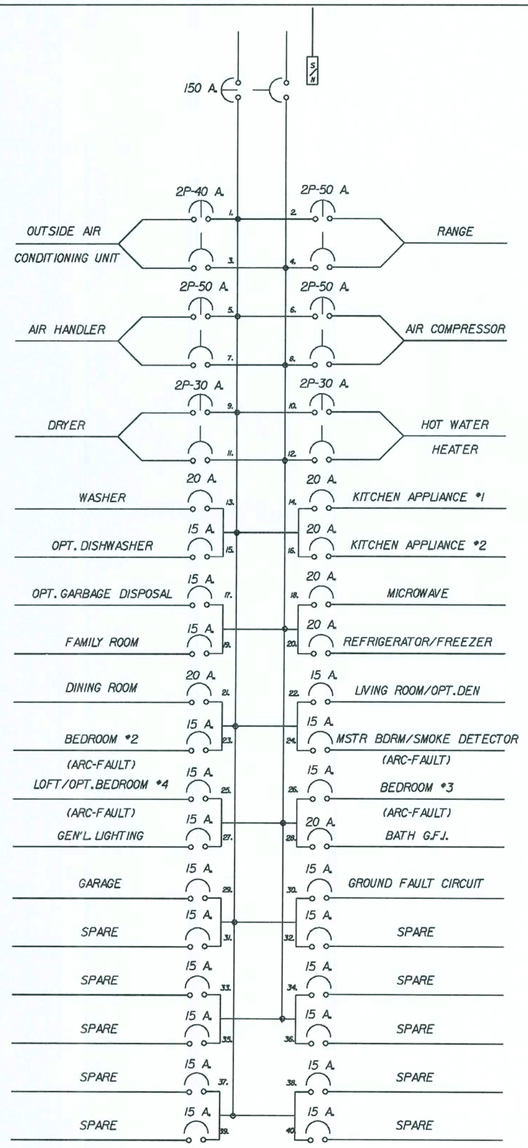

MAIN BREAKER LOAD CENTER

NOTE:
IF LOCAL CODE REQUESTS A LOCK-DOG DEVICE ON BREAKERS FOR APPLIANCES, FIELD WILL SUPPLY TO COMPLY

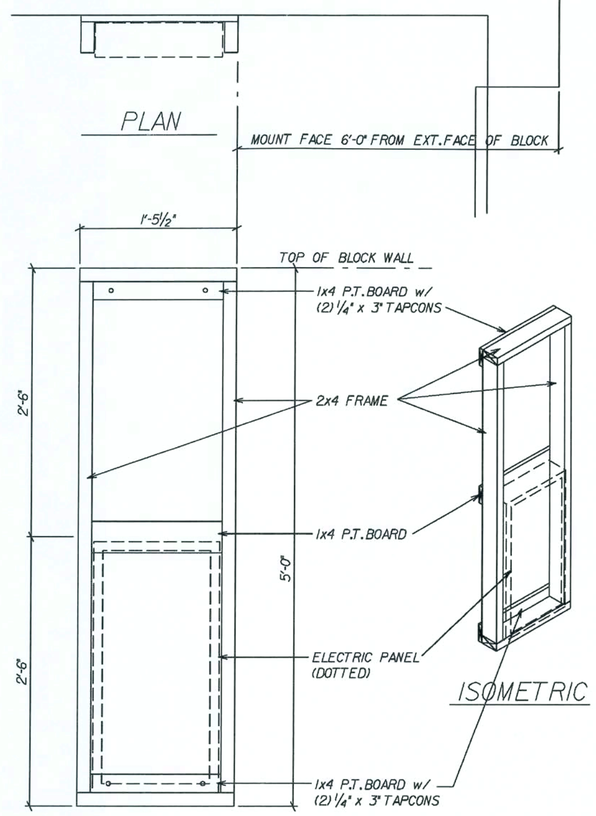

ELECTRIC PANEL FRAME

SCALE: 1" = 1'-0"

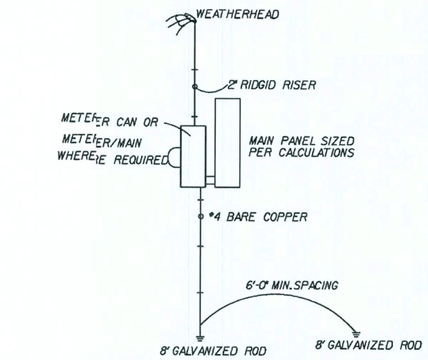

OVERHEAD SERV.

REVISED 06-06-06 SPACING REQUIREMENT

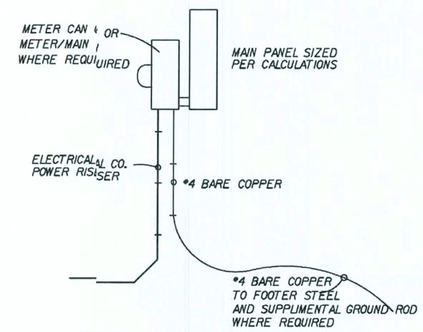

UNDER GROUND SERV.

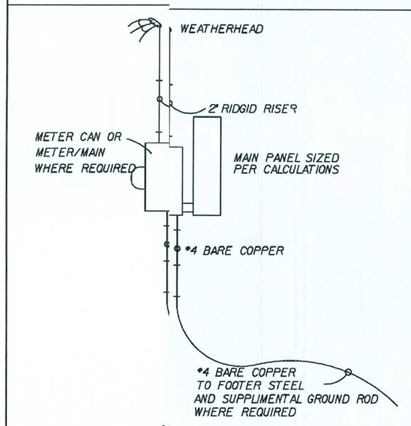

OVERHEAD SERV.

REVISED 06-06-06 SPACING REQUIREMENT

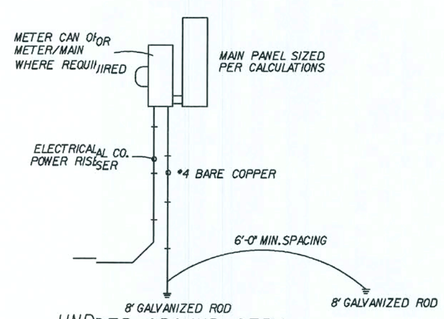

UNDER GROUND SERV.

* GROUNDING ; ELECTRODE SYSTEM TO BE INSTALLED PER ARTICLE 250 NAT. ELECT. CODE *

REVISIONS :

05-23-06	REV. BREAKER LOAD CENTER
05-24-06	ADD NOTE FOR LOCK-DOG
11-28-06	REV. ELECT. LOAD CALC.
12-19-06	ELIM. SMOKE DETECT. HOME RUN.
02-19-07	ADD SMOKE DETECTOR TO MASTER BEDROOM
3-02-07	REV. DINING RM. CKT. FROM 15A TO 20A

COPYRIGHT © 2005 MARONDA HOMES

Maronda Homes
(407) 321-0064 4005 MARONDA WAY SANFORD, FLORIDA

AMERICANA ELECTRICAL DETAILS

SUNBURY-NEWBERRY

DRAWN BY: GARAGE:

RELEASE DATE: 09-11-03

SHEET: ELA

PLOT DATE: 22 MAR 2007 15:22:32

p:\f:\houses_05\sunbury\electrical\sunbly 05

FLORIDA BUILDING CODE 2004 ; RESIDENTIAL

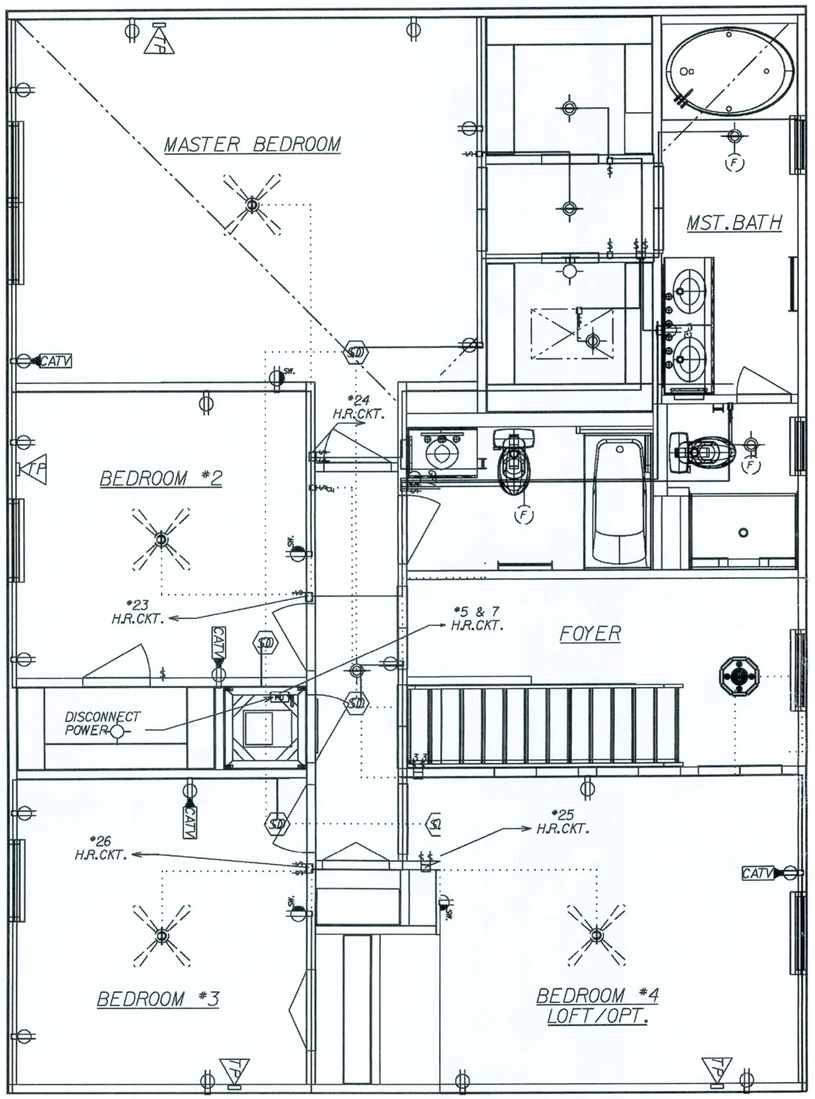

GENERAL ELECTRICAL NOTES:

CIRCUITRY IS DIAGRAMATIC ONLY, FIELD CONDITIONS MAY CHANGE ACTUAL INSTALLATION.

PROVIDE AFCIs (arc-fault circuit interrupters) IN ALL DWELLING UNIT BEDROOMS PER NEC, SECTION 210.12

SMOKE DETECTORS ARE INSTALLED PER MFG. INSTRUCTIONS AND NFPA 72. ALL DEVICES SHALL BE INTERCONNECTED WITH BATTERY BACK-UP.

FOR INSTALLATION OF GROUND ROD, SEE TYP. CONC.ENCASED ELECTRODE DETAIL SHEET* FTG

REVISED 10-05-06

LIST OF OPTIONS:

CFA	OPTIONAL COACH LIGHTS, (2) FLOOD LIGHTS AT REAR AND GARAGE OUTLET REVISED 11-18-05
GSD	OPTIONAL DOOR LIGHT REVISED 11-18-05

ELECTRICAL SYMBOL LEGEND:

REGULAR TEXT	REVERSE TEXT	DESCRIPTION
PD	PD	Power Disconnect Switch
		Door Bell Chime
		Door Bell Buzzer
		Ceiling Fan (By Others)
SD	SD	Smoke Detector
		Light Fixture Bath
		Exterior WP Lamp
		Single Pole Switch
		Three Way Switch
		Single Receptacle
		Duplex Receptacle
GFI	GFI	GFI Receptacle
SW.	SW.	Switched Receptacle
		220 V.Special Receptacle
		Ceiling Ltg Fixture
R	R	Recessed Ltg.Fixture
F	F	Exhaust Fan
CATV	CATV	Cable TV
TEL	TEL	Telephone Outlet
		Flood Lights
EL		Exhaust Fan / Light Combo

REVISED 03-19-07

COPYRIGHT © 2005 MARONDA HOMES

REVISIONS :
02-03-06 REVISED MASTER BATH LIGHT
06-14-06 REV.MASTER BATH CLOSET ELECT.
01-29-07 REV.MST.R.B.R.SMOKE DET.LOC.ELECT.

Maronda Homes
(407) 321-0064 4005 MARONDA WAY SANFORD, FLORIDA

AMERICANA | 2nd. FLR. ELECTRICAL

SUNBURY-NEWBERRY

3 BEDROOM

DRAWN BY: GARAGE: RIGHT

RELEASE DATE: / /

SHEET: EL2

05

p:\fl\houses_05\sunbury\electrical\sun3r2

15:22:33

PLOT DATE: 22 MAR 2007

elecitem REPORT

Mon Jan 10 11:41:18 2005
p:*fl*houses 05*sunbury*electrical*sun3-r.l2

QUANTITY	DESCRIPTION
17	1451 Single Pole Switch
1	CLN B344A - 3 Gang Box
9	CLN B620H - Octagon Hanger
4	Cable TV
4	Ceiling Fan (By Others)
6	Ceiling Ltg Fixture
1	Deluxe Broadway 2' P3298-10
1	Deluxe Broadway 3' P3299-11
21	Duplex Receptacle
3	Exhaust Fan
1	Foyer Chandelier
1	H-7T-Rec Lht
1	Power Disconnect Switch
30	RAC 7302 - 1 Gang BoX
6	RAC 7835 - 2 Gang Box
5	Smoke Detector
4	Switched Receptacle
4	Telephone Outlet
3	Three Way Switch

elecinth REPORT

Mon Jan 10 11:41:18 2005
p:*fl*houses 05*sunbury*electrical*sun3-r.el2

QUANTITY	DESCRIPTION
71'	10 Gauge/3 Cond. Copper
40'	12 Gauge/2 Cond. Copper
1075'	14 Gauge/2 Cond. Copper
306'	14 Gauge/3 Cond. Copper

FLORIDA BUILDING CODE 2004 :RESIDENTIAL

MECHANICAL EQUIPMENT :

3.5 TON
TEMPSTAR FEM2X4200 13 SEER
TEMPSTAR N2H342AKA 13 SEER
7.5 KW
BRAEBURN 5200 2 STAGE HEAT PUMP PROGRAMABLE
BROAN 671-70 CFM (2)
SIZES OF REDUCTION BOXES (DB6-16x14x16x12x15)
SIZE OF TRIANGLES (15x15x15x15)
EXT.STATIC .60 - 1240 CFM M

ALL TAPES, CONNECTORS AND MASTIC USED WILL BE UL-181

SEER

* USE WITH 13 EQUIPMENT *

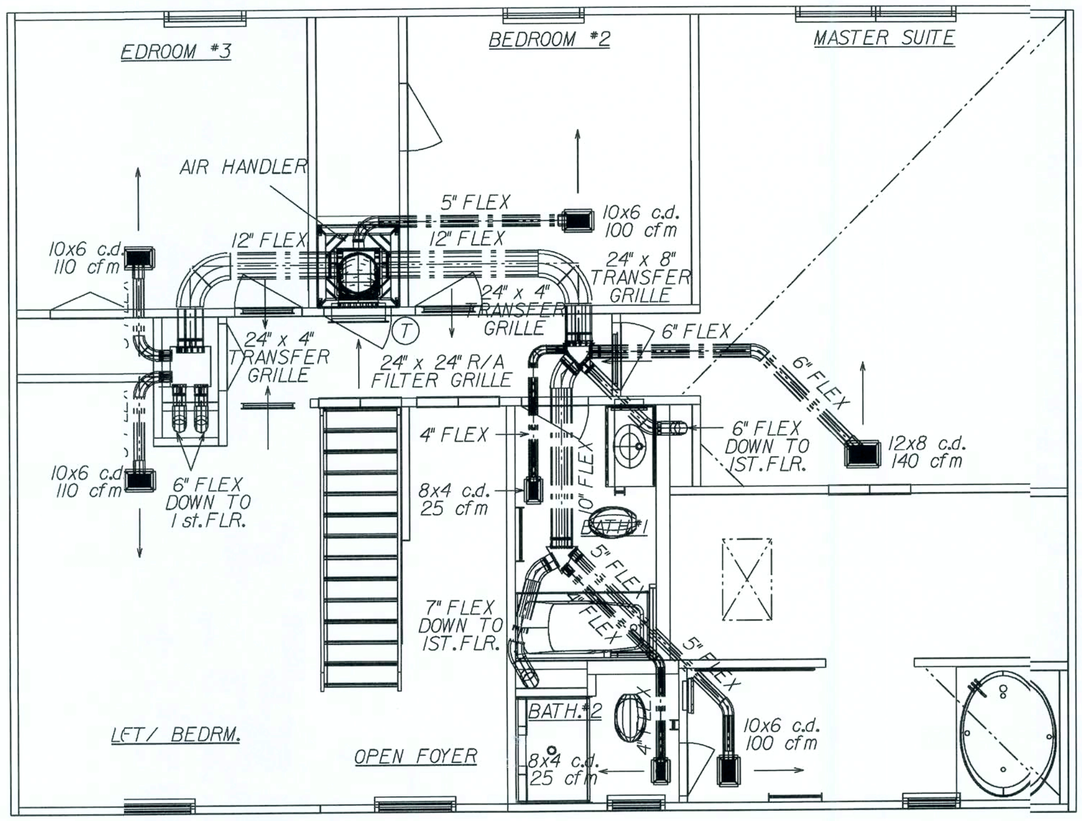

SECOND FLOOR PLAN
SCALE 1/4" = 1' - 0"

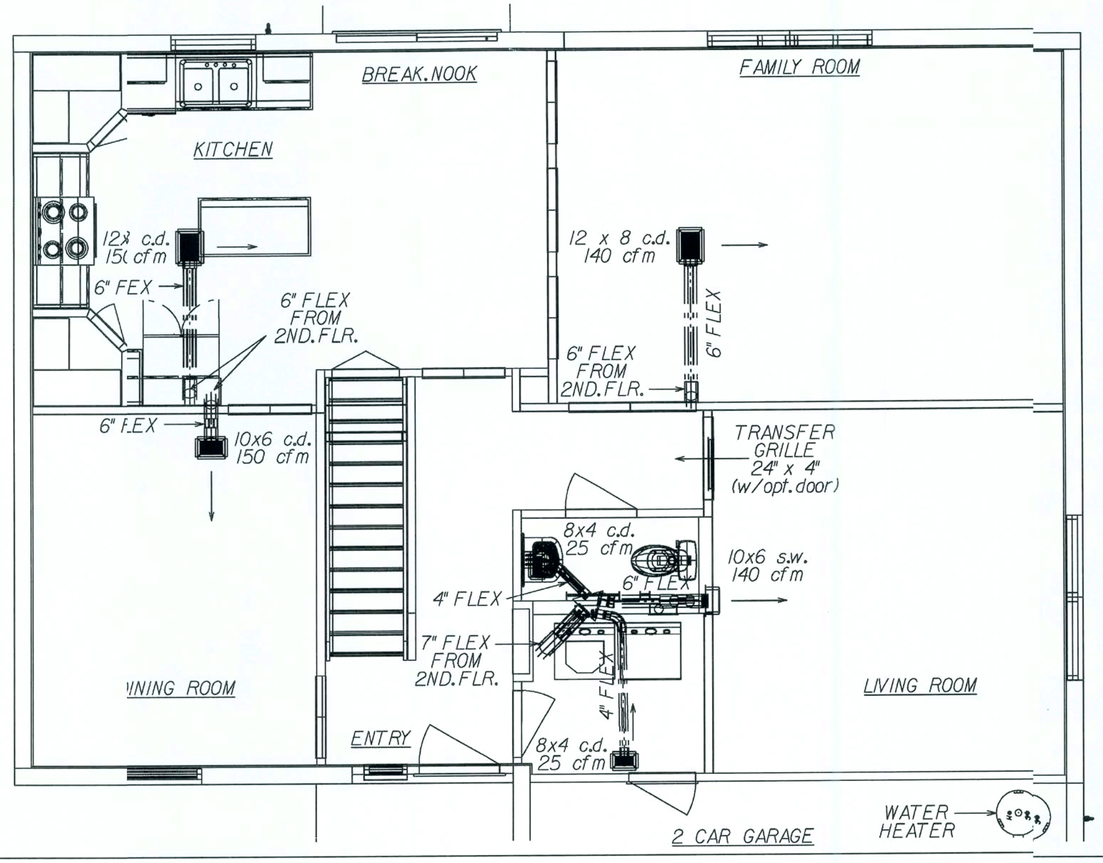

FIRST FLOOR PLAN
SCALE 1/4" = 1' - 0"

GENERAL MECHANICAL NOTES:

ALL TAPES, CONNECTORS AND MASTIC USED WILL BE UL-181 APPROVED.

SEE ELECTRIC PLANS FOR EXHAUST FAN LOCATIONS IN BATH AREAS.

SEE FLOOR PLAN FOR CLOTHES DRYER VENT LOCATION.

M1602.4 BALANCED RETURN AIR:
TRANSFER GRILLES @ HABITABLE ROOMS SEE DETAIL BELOW:

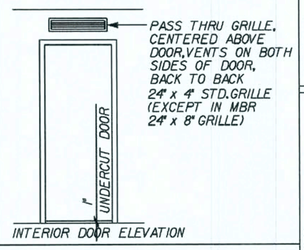

INTERIOR DOOR ELEVATION

REVISIONS :
REV.TRANSFER GRILLE @ M.B.R.(08/05/05)
11-01-05 REMOVED ENG'S NOTE
11/28/05 REVISED HEATING SYSTEM T.J.T.
1/2/07 UPDATED TO 13 SEER EQUIP.T.JM

COPYRIGHT © 2005 MARONDA HOMES

Maronda Homes
(407) 321-0064 4005 MARONDA WAY SANFORD, FLORIDA

AMERICANA | REGISTER LAYOUT
SUNBURY-NEWBERRY
3 BEDROOM / LOFT
DRAWN BY: GARAGE: RIGHT
T.J.TOOMEY
RELEASE DATE: 9/26/01
PLOT DATE: 22 MAR 2007
15:24:20
p:\f\houses_05\sunbury\hvac\sunl3.hvac
05

SHEET:
HVA

FLORIDA BUILDING CODE 2004 : RESIDENTIAL

* USE WITH 13 SEER EQUIPMENT *

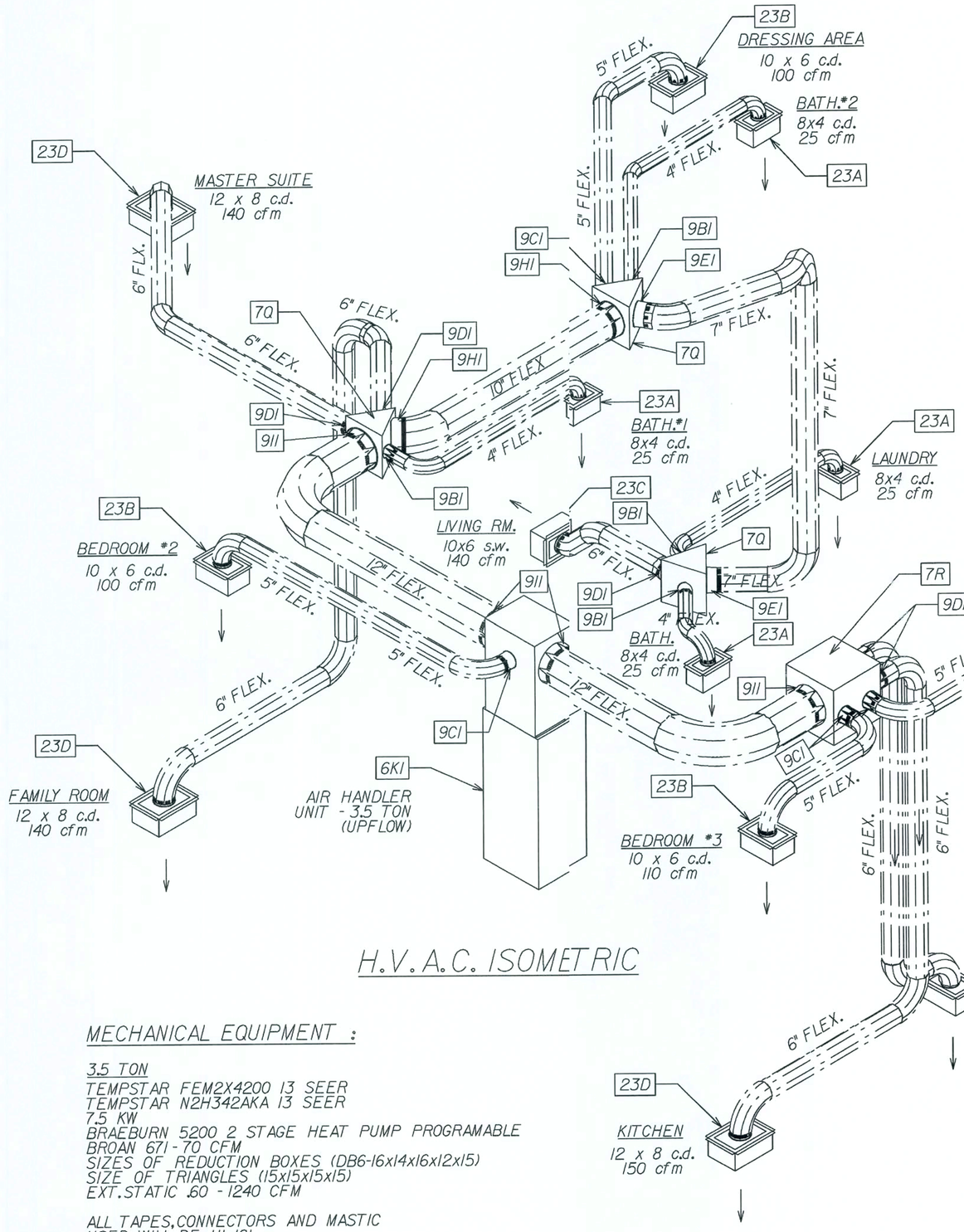

H.V.A.C. ISOMETRIC

hvacitem REPORT

Tue Dec 26 16:45:47 2006
p:*fl*houses 05*sunburyy*hvac*sunh.htg

QUANTITY	DESCRIPTION		
4	23A	150045.0035	8x4 CEILING BOOT W/4" DIA. COLLAR
5	23B	150045.0036	10x6 CEILING BOOT W/5" DIA. COLLAR
1	23C	150045.0036	10x6 CEILING BOOT W/6" DIA. COLLAR
3	23D	150045.0038	12x8 CEILING BOOT W/6" DIA. COLLAR
1	23Z	150045.0046	24x24 R/A TRANSITION BOOT W/18" COLLAR
7'	3F10	150040.0097	10" FOIL FLEX R6
15'	3F12	150040.0098	12" FOIL FLEX R6
3'	3F18	150040.0138	18" FOIL FLEX R6
25'	3F4	150040.0091	4" FOIL FLEX R6
25'	3F5	150040.0092	5" FOIL FLEX R6
65'	3F6	150040.0093	6" FOIL FLEX R6
16'	3F7	150040.0094	7" FOIL FLEX R6
1	6K1	150005.0044	FEM2X4200A 13 SEER 3.5 TON AIR HANDLER UNIT
1	6Q1	150010.0104	N2H342AKA 13 SEER 3.5 TON CONDENSER
1	7C	150005.0110	19x13x30"H BOX PLENUM
3	7Q	150040.0118	DUCT PLENUM TRIANGLE
1	7R	150040.0111	18" SQUARE DUCT PLENUM
4	81A	150055.0041	24x4 TRANSFER GRILLE
4	81B	150045.0052	24x4 TRANSFER GRILLE FRAME
1	81C	150055.0078	24x8 TRANSFER GRILLE
1	81D	150045.0078	24x8 TRANSFER GRILLE FRAME
1	84A	150055.0032	24x24 RETURN AIR FILTER GRILLE
4	9B1	150040.0075	4" K-COLLAR/ROTH (4KC/413)
4	9C1	150040.0076	5" K-COLLAR/ROTH (5KC/413)
5	9D1	150040.0077	6" K-COLLAR/ROTH (6KC/413)
2	9E1	150040.0078	7" K-COLLAR/ROTH (7KC/413)
2	9H1	150040.0081	10" K-COLLAR/ROTH (10KC/413)
4	9I1	150040.0082	12" K-COLLAR/ROTH (12KC/413)
1	9M1	150040.0137	18" K-COLLAR/ROTH (18KC/413)

MECHANICAL EQUIPMENT :

3.5 TON
TEMPSTAR FEM2X4200 13 SEER
TEMPSTAR N2H342AKA 13 SEER
7.5 KW
BRAEBURN 5200 2 STAGE HEAT PUMP PROGRAMABLE
BROAN 671-70 CFM
SIZES OF REDUCTION BOXES (DB6-16x14x16x12x15)
SIZE OF TRIANGLES (15x15x15x15)
EXT.STATIC .60 - 1240 CFM

ALL TAPES, CONNECTORS AND MASTIC
USED WILL BE UL-181

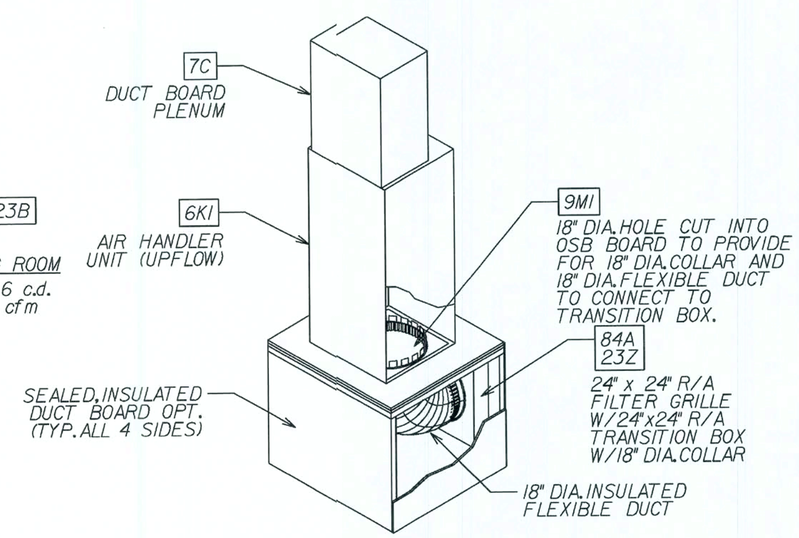

RETURN-AIR ISOMETRIC

REVISIONS :
11/28/05 REVISED HEATING SYSTEM T.J.T.
12/29/06 UPDATED TO 13 SEER TJM

COPYRIGHT © 2005 MARONDA HOMES

Maronda Homes
(407) 321-0064 4005 MARONDA WAY SANFORD, FLORIDA

05

HVAC ISO
AMERICANA
SUNBURY-NEWBERRY
3 BEDROOM/LOFT
GARAGE: RIGHT
DRAWN BY: T.J.T.
RELEASE DATE: 9/9/99
(5242)

SHEET:
ISO-H

PLOT DATE: 22 MAR 2007

p:\fl\houses_05\sunbury\hvac\sunh3.iso

FLORIDA BUILDING CODE 2004 : RESIDENTIAL

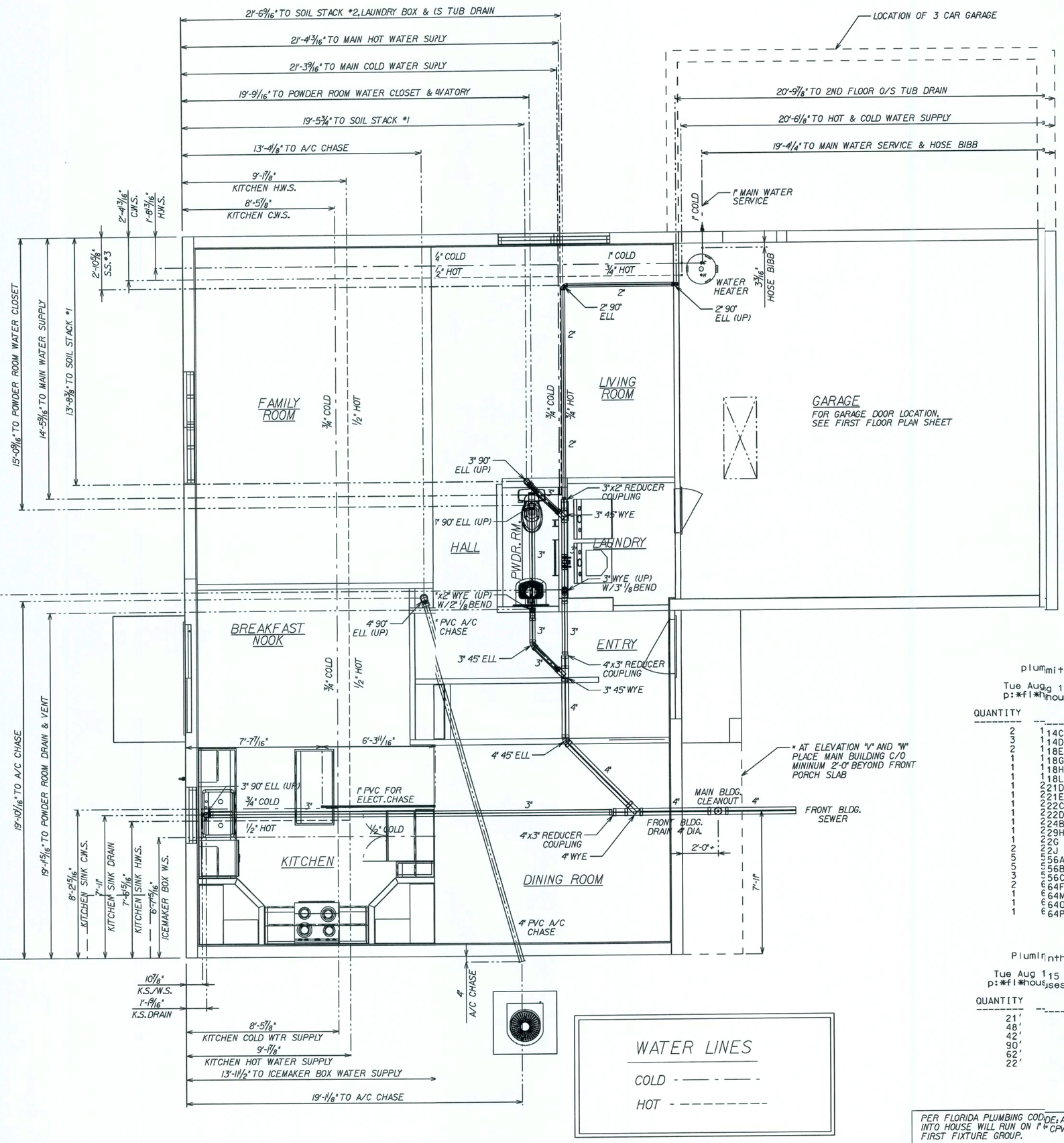

plummitem REPORT

Tue Aug 15 15:17:27 2006
p:*fl*houses 05*sunbury*plumbing*sunbury.fp1

QUANTITY			DESCRIPTION
2	114C	130005.0041	2" PVC 90 ELBOW
3	114D	130005.0066	3" PVC 90 ELBOW
2	118E	130005.0076	3" PVC 45 WYE
1	118G	130005.0063	3"x3"x2" PVC 45 WYE
1	118H	130005.0097	4" PVC 45 WYE
1	118L	130005.0081	4"x4"x3" PVC 45 WYE
1	221D	130005.0064	3" PVC 45 ELBOW
1	221E	130005.0083	4" PVC 45 ELBOW
1	222C	130005.0040	2" PVC 45 ST. ELBOW
1	222D	130005.0065	3" PVC 45 ST. ELBOW
1	224B	130005.0150	4" 2-WAY CLEANOUT TEE
1	229H	130005.0189	4x4 FEM ADPTR W/ C/O PLG.
1	22G	130005.0061	3x2 PVC REDUCER COUPLING
2	22J	130005.0082	4X3 REDUCER COUPLING
5	556A	150060.0199	1/2" CPVC 90 ELBOW
5	556B	130010.0007	3/4" CPVC 90 ELBOW
3	556C	130010.0057	1" CPVC 90 ELBOW
2	664F	130010.0037	3/4"X1/2"X3/4" CPVC TEE
1	664M	130010.0099	1x3/4x3/4 CPVC TEE
1	664O	130010.0061	1x1x1/2" CPVC TEE
1	664P	130010.0060	1x1x3/4" CPVC TEE

Plumlrnth REPORT

Tue Aug 15 15:17:27 2006
p:*fl*houses 05*sunbury*plumbing*sunbury.fp1

QUANTITY		DESCRIPTION
21'	130005.0047	2" PVC PIPE
48'	130005.0072	3" PVC PIPE
42'	130005.0091	4" PIPE
90'	130010.0012	3/4" CPVC PIPE
62'	130010.0025	.5" CPVC PIPE
22'	130010.0056	1" CPVC PIPE

PER FLORIDA PLUMBING CODE: ALL WATER INTO HOUSE WILL RUN ON 1" CPVC TO FIRST FIXTURE GROUP.

REVISED 10-03-06

PER FLORIDA PLUMBING CODE: ALL DWV THROUGH FOOTERS WILL BE SLEEVED

REVISED 08-15-05

FLORIDA BUILDING CODE 2004 : RESIDENTIAL

REVISIONS :

06-07-06	ADDED 3CAR GARAGE LOCATION
06/26/06	REVISED AS PER DRAWINGS TJM
08/15/06	REV. CLEANOUT & BOM LIST TJM
09-25-06	ADDED GARAGE DOOR NOTE

COPYRIGHT © 2005 MARONDA HOMES

Maronda Homes
(407) 321-0064 4005 MARONDA WAY SANFORD, FLORIDA

05

AMERICANA

UNDRGRND.PLMB.

SUNBURY-NEWBERRY

ALL ELEVATIONS

DRAWN BY: T.J.T.
GARAGE: RIGHT
RELEASE DATE: 09/09/99

p:\fl\houses_05\sunbury\plumb\fp\sunbury-fp1

15:32:07

PLOT DATE: 22 MAR 2007

SHEET: FP1

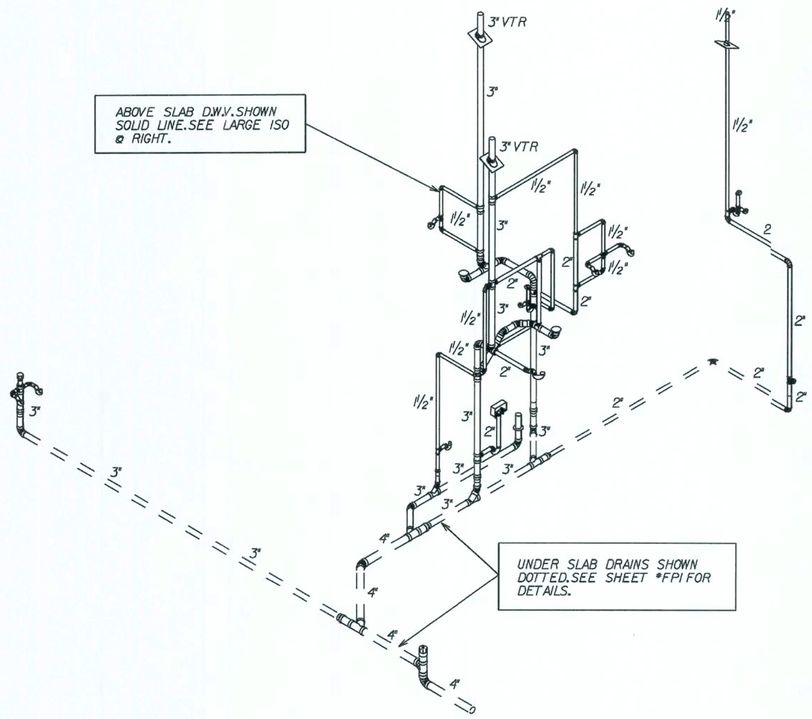

COMPLETE SANITARY PLUMBING DIAGRAM

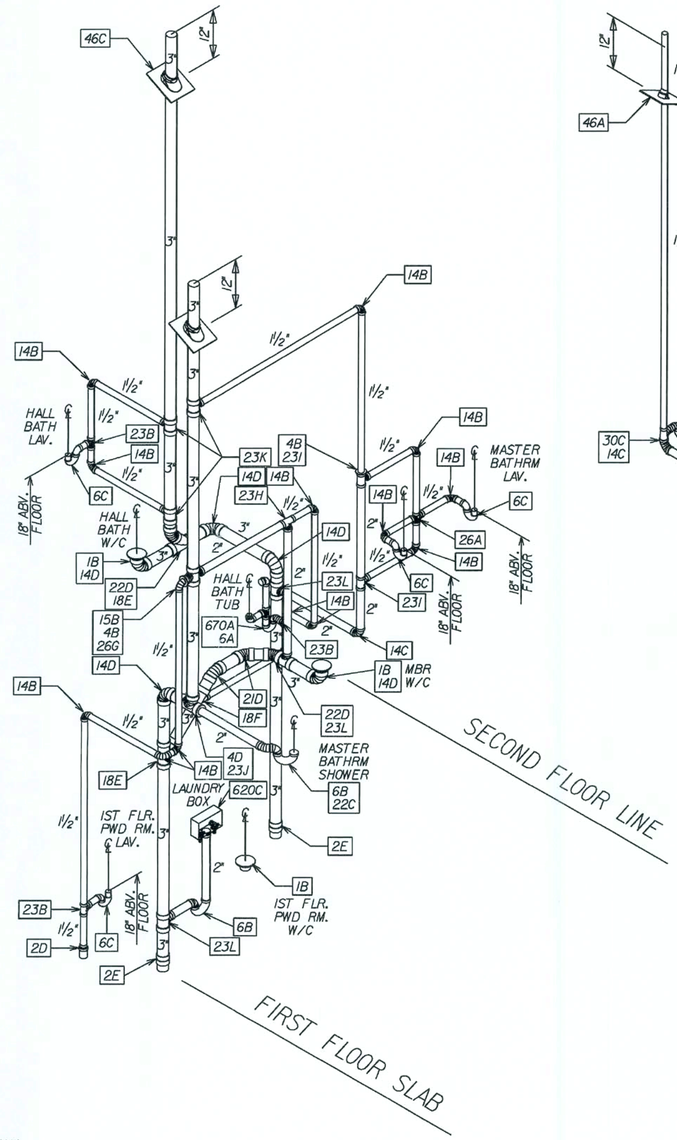

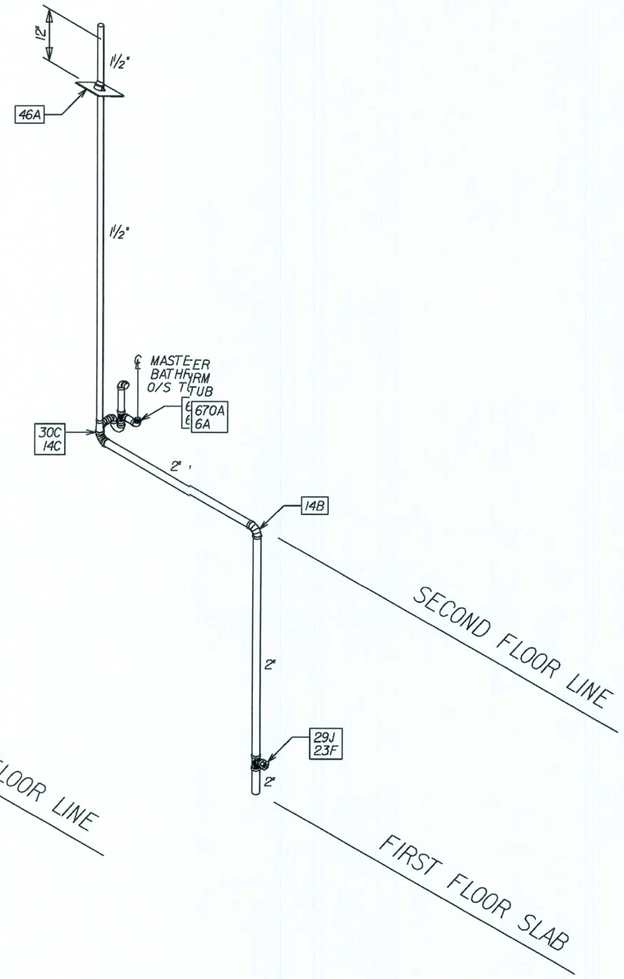

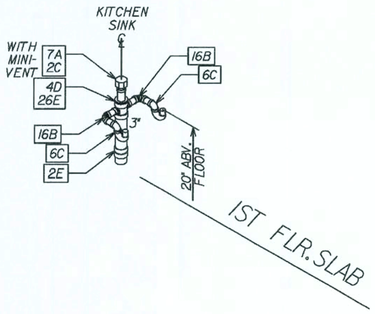

plumitem REPORT

Thu Aug 17 14:39:44 2006
p:*fl*houses 05*sunbury*plumbing*snburyp.plm

QUANTITY		DESCRIPTION	
16	14B	130005.0013	1.5" PVC 9 ELBOW
3	14C	130005.0041	2" PVC 90 ELBOW
5	14D	130005.0066	3" PVC 90 ELBOW
1	15B	130005.0015	1.5" PVC 9 ST. ELBOW
2	18E	130005.0076	3" PVC 45 WYE
1	18F	130005.0057	3"x3"x1.5 PVC 45 WYE
3	1B	130005.0099	4"X3" CLOST FLANGE
2	21D	130005.0064	3" PVC 45 ELBOW
1	22C	130005.0040	2" PVC 45 ST. ELBOW
2	22D	130005.0065	3" PVC 45 ST. ELBOW
3	23B	130005.0024	1.5" PVC TEE
1	23F	130005.0048	2" PVC TEE
1	23H	130005.0265	2"x1.5"x2 PVC TEE
2	23I	130005.0034	2"x2"x1.5 PVC TEE
1	23J	130005.0074	3" PVC TEE
3	23K	130005.0056	3"x3"x1.5 PVC TEE
3	23L	130005.0062	3"x3"x2" PC TEE
1	26A	130005.0727	1.5" DOUBL TEE
1	26E	130005.0132	3"x3"x1.5 1.5" DOUBLE TEE
1	26G	130005.0134	3"x3"x2"x2 DOUBLE TEE
1	29J	130005.0291	2" CO ADAFER W/CO PLUG
1	2C	130005.0043	2" PVC COUPLING
1	2D	130005.0033	2x1.5 PVC REDUCER COUPLING
3	2E	130005.0068	3" PVC COUPLING
1	30C	130005.0279	2x1.5x1.5 ST. TEE
1	46A	130050.0238	1-1/2" NEOPRENE ROOF FLASHING
2	46C	130050.0028	3" NEOPRENE ROOF FLASHING
2	4B	130005.0032	2x1.5 FTG L BUSHING
2	4D	130005.0059	3x2 FTG FLBUSHING
1	620C	130035.0027	Laundry Bc Center
2	670A	130005.0105	1 1/2" WATO TUB OVERFLOW ASSEMBLY
2	6A	130005.0022	1.5"x1.5" -TRAP PartA
2	6A	130005.0022	1.5"x1.5" -TRAP PartB
2	6B	130005.0046	2" P-TRAP
6	6C	130005.0107	1.5"x1.25'P-TRAP W/UNION JT
1	7A	130005.0160	1.25-2" STDOR MINI-VENT

Pluminth REPORT

Thu Aug 17 14:39:44 2006
p:*fl*houses 05*sunbury*plumbing*sunblyp.plm

QUANTITY	DESCRIPTION	
64'	130005.0023	1.5" PIPE
33'	130005.0047	2" PVC PIF
52'	130005.0072	3" PVC PIF

REVISIONS :
06/26/06 REVISED AS PER DRAWINGS TJM
08/18/06 REVD.KITCHEN SINK ASSEM.- TJM

COPYRIGHT © 2005 MARONDA HOMES

Maronda Homes
(407) 321-0064 4005 MARONDA WAY SANFORD, FLORIDA

AMERICANA
DWV PLUMBING ISO
SUNBURY-NEWBERRY
ALL ELEVATIONS
DRAWN BY: T J TOOMEY
GARAGE: RIGHT
RELEASE DATE: 02/28/05
05
p:\fl\houses_05\sunbury\plumbing\sunburyp.iso
15:32:07
PLOT DATE: 22 MAR 2007
SHEET: ISO-P

FLORIDA BUILDING CODE 2004 : RESIDENTIAL

plumitem REPORT

Thu Jun 29 13:31:11 2006
p:*fl*houses 05*sunbury*plumbing*sunburyp.plm

QUANTITY		DESCRIPTION	
1	140A	130025.0017	1/2" COPPER 90 ELBOW
2	140M	130025.0051	1/2" COPPER 90 ELBOW Drop
1	151A	130025.0020	1/2" COPPER MALE ADAPTER
1	200A	130035.0061	Tub Diverter
1	200B	130035.0061	Shower Diverter
2	300B	130010.0049	Strgight Valve 1/2" x 3/8"
13	300C	130010.0046	1/2" x 3/8"Angle Valve
3	54A	130010.0022	1/2" CPVC COUPLING
4	54B	130010.0009	3/4" CPVC COUPLING
27	56A	150060.0199	1/2" CPVC 90 ELBOW
8	56B	130010.0007	3/4" CPVC 90 ELBOW
5	58A	130010.0027	1/2" CPVC 90 ST. ELBOW
2	605A	130055.0047	Corr Gas App Conn
2	60A	130010.0028	1/2" CPVC 45 ELBOW
1	620C	130035.0027	Laundry Box Center
1	630A	130035.0057	Ice Maker Box
5	64B	130010.0013	3/4" CPVC TEE
8	64E	130010.0035	3/4"X1/2"X1/2" CPVC TEE
1	64F	130010.0037	3/4"X1/2"X3/4" CPVC TEE
4	64G	130010.0005	3/4"X3/4"X1/2" CPVC TEE
2	650A	130050.0109	1/2" Hose Bib
2	66B	130010.0010	3/4" CPVC MALE ADAPTER BRASS THREAS
2	90A	130035.0080	Shut-Off Valve
1	90B	130050.0090	3/4" SHUT-OFF GATE VALVE

Pluminth REPORT

Thu Jun 29 13:31:11 2006
p:*fl*houses 05*sunbury*plumbing*sunburyp.plm

QUANTITY	DESCRIPTION	
64'	130005.0023	1.5" PIPE
32'	130005.0047	2" PVC PIPE
52'	130005.0072	3" PVC PIPE
66'	130010.0012	3/4" CPVC PIPE
78'	130010.0025	.5" CPVC PIPE
7'	130025.0006	1/2" COPPER Pipe

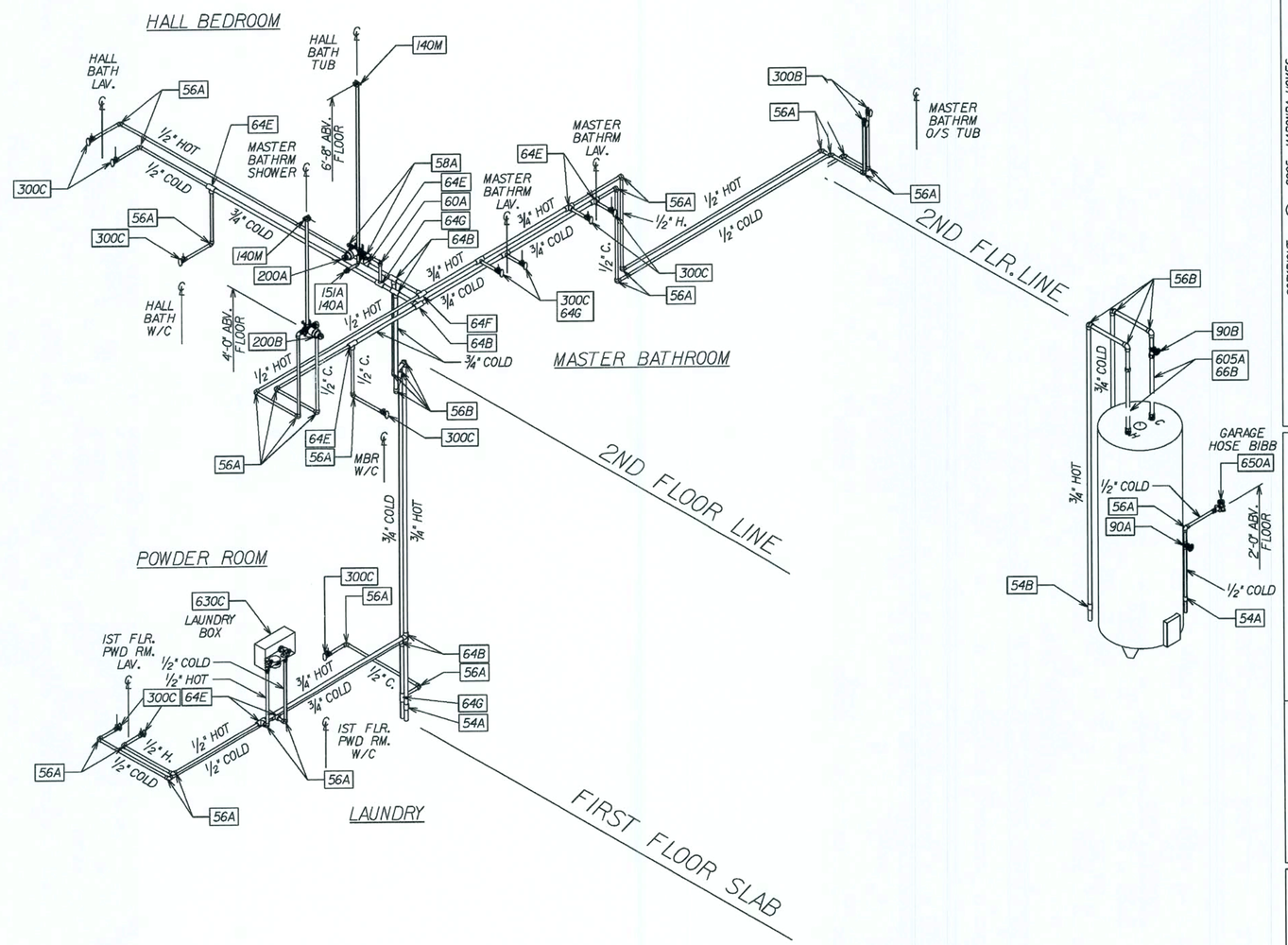

PER FLORIDA PLUMBING CODE: ALL WATER INTO HOUSE WILL RUN ON 1" CPVC TO FIRST FIXTURE GROUP.
REVISED 10-03-06

FLORIDA BUILDING CODE 2004 : RESIDENTIAL

REVISIONS :
06/26/06 REVISED AS PER DRAWINGS TJM

COPYRIGHT © 2005 MARONDA HOMES

Maronda Homes
(407) 321-0064 4005 MARONDA WAY SANFORD, FLORIDA

AMERICANA CPVC WATER ISO
SUNBURY-NEWBERRY
3 BEDROOM/LOFT
DRAWN BY: GARAGE: RIGHT T.JTOOMEY
RELEASE DATE: 03/03/05

SHEET: ISO-W

PLOT DATE: 22 MAR 2007
15.3208
p:\houses_05\sunbury\plumb\fg\sunburyw.iso
05

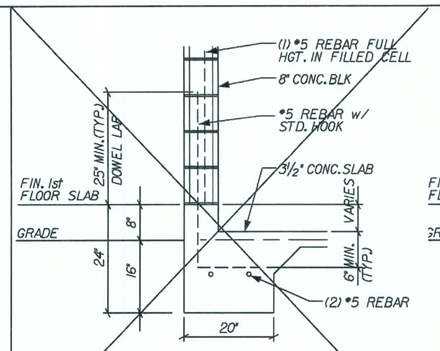

G2 GARAGE 2-STORY
REVISED 11-07-06 DELETED STONE LEDGE
NOT USED
SCALE: ½" = 1'-0"

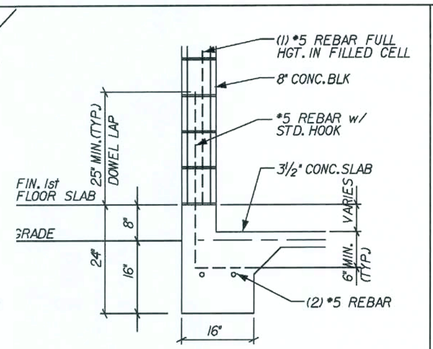

G GARAGE 1-STORY
REVISED 11-07-06 DELETED STONE LEDGE
SCALE: ½" = 1'-0"

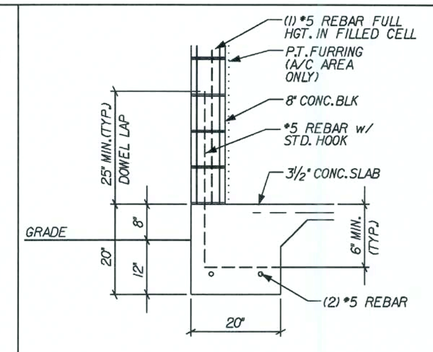

A2 TYPICAL 2-STORY
REVISED 11-07-06 DELETED STONE LEDGE
SCALE: ½" = 1'-0"

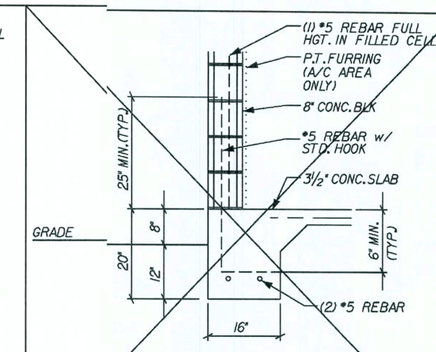

A TYPICAL 1-STORY
REVISED 11-07-06 DELETED STONE LEDGE
SCALE: ½" = 1'-0"

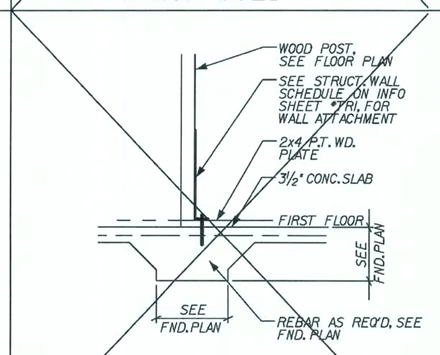

J INTERIOR BEARING POST
NOT USED
SCALE: ½" = 1'-0"

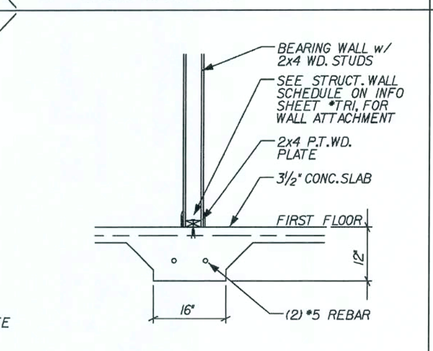

I INTERIOR BEARING
SCALE: ½" = 1'-0"

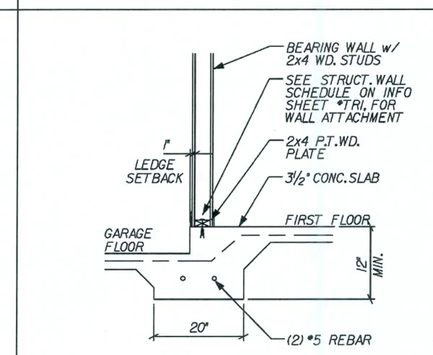

H STEP/BEARING
REVISED 01-31-05
SCALE: ½" = 1'-0"

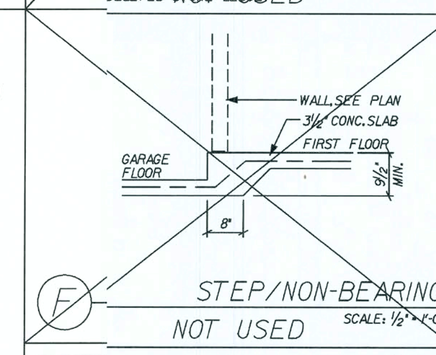

F STEP/NON-BEARING
NOT USED
SCALE: ½" = 1'-0"

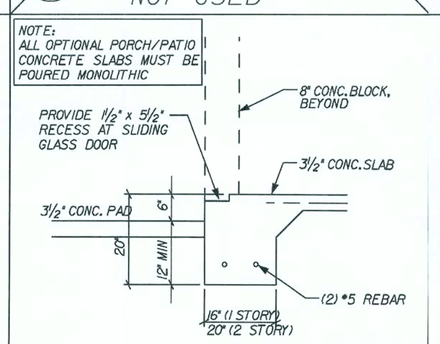

S RECESS @ SLIDER
REVISED 05-06-05
SCALE: ½" = 1'-0"

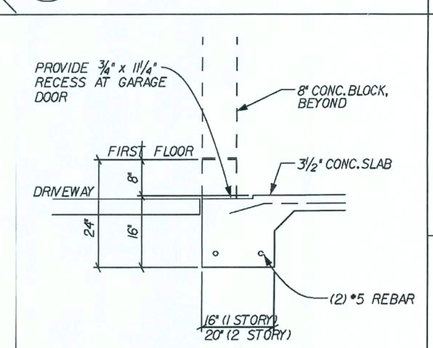

R THICK'N EDGE/GARAGE
REVISED 04-23-06
SCALE: ½" = 1'-0"

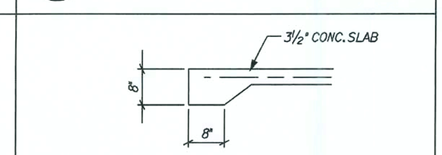

N THICK'N EDGE
SCALE: ½" = 1'-0"

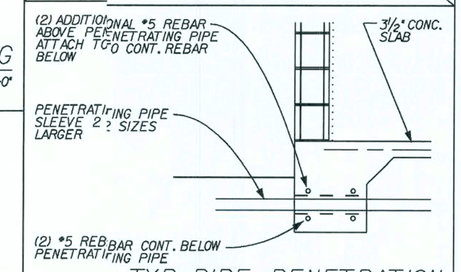

TYP. PIPE PENETRATION
REVISED 01-06-06 ADDED DETAIL
SCALE: ½" = 1'-0"

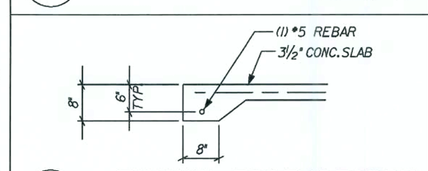

P THICK'N EDGE/BEARING
SCALE: ½" = 1'-0"

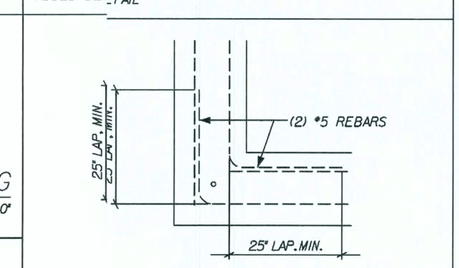

TYP. FTNG @ INSIDE CORNER
SCALE: ½" = 1'-0"

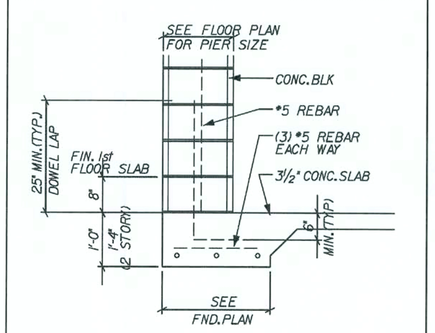

U PIER DETAIL #2
REVISED 02-20-07 16" DEEP @ 2 STORY
SCALE: ½" = 1'-0"

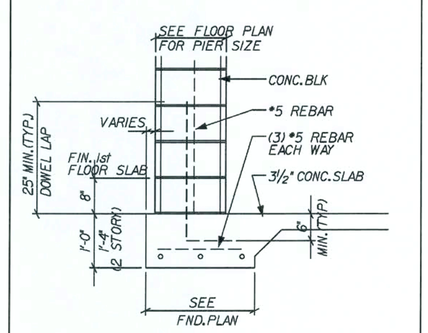

SUNBURY - 'V' PIER DETAIL #1
T REVISED 02-20-07 16" DEEP @ 2 STORY
SCALE: ½" = 1'-0"

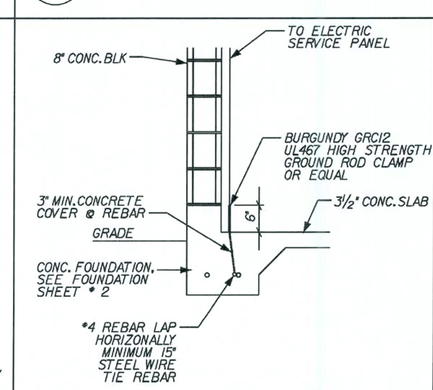

TYP. CONC. ENCASED ELECTRODE
SCALE: ½" = 1'-0"

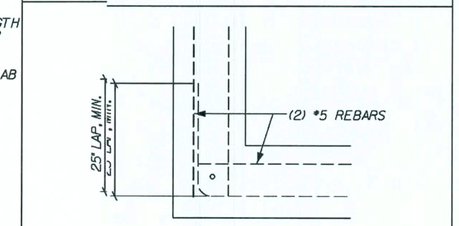

TYP. FTNG @ OUTSIDE CORNER
SCALE: ½" = 1'-0"

FLORIDA BUILDING CODE 2004 : RESIDENTIAL

REVISIONS :

COPYRIGHT © 2005 MARONDA HOMES

Maronda Homes
(407) 321-0064 4005 MARONDA WAY SANFORD, FLORIDA

FOOTINGS STANDARD DETAILS
SUNBURY-NEWBERRY

GARAGE:
DRAWN BY:
RELEASE DATE: 10-08-04

Maronda Systems
4005 Maronda Way
Sanford, FL 32771
(407)321-0064

Tomas Ponce P.E.
License No. 0050068

OCT 10 2007

SHEET:
FTG

PLOT DATE: 26 JUN 2007
14:41:41
05
p:\fl\houses_05\sunbury\dtls\sun-std.ftg

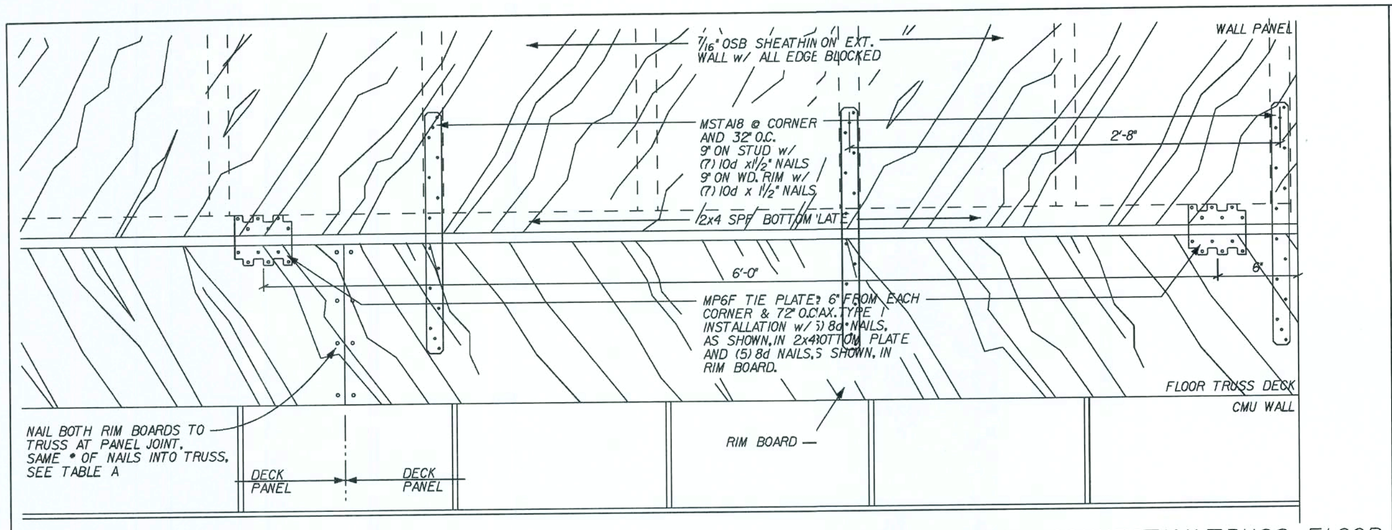

J — TYPICAL WALL CONNECTION-TRUSS FLOOR

SCALE: 1½" = 1'-0"

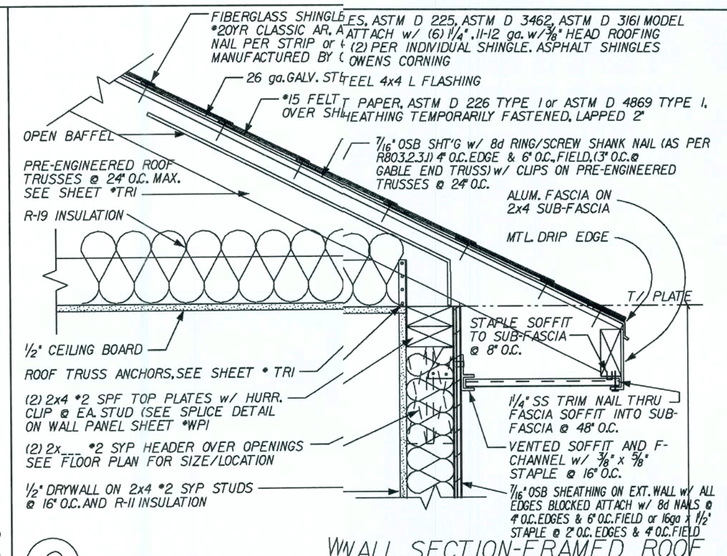

C — WALL SECTION-FRAMED ROOF

REVISED 05-02-07 - OSB ROOF NAIL TYPE

SCALE: 1½" = 1'-0"

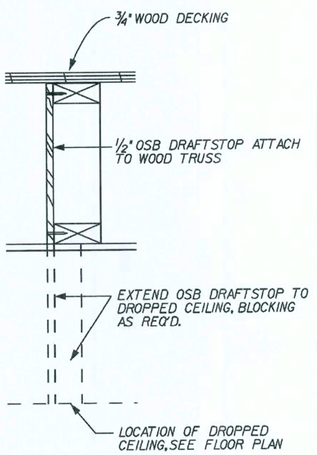

H — DRAFT STOPPING-TRUSS FLOOR

SCALE: 1½" = 1'-0"

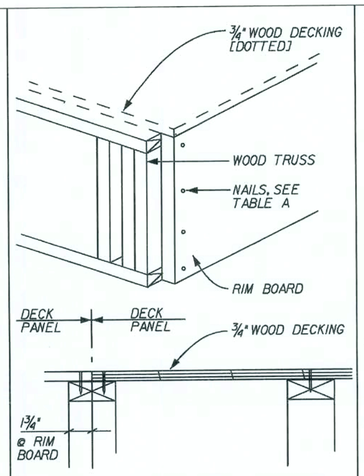

G — DECK CONNECTION @ PANEL JOINT TRUSS FLOOR

SCALE: 1½" = 1'-0"

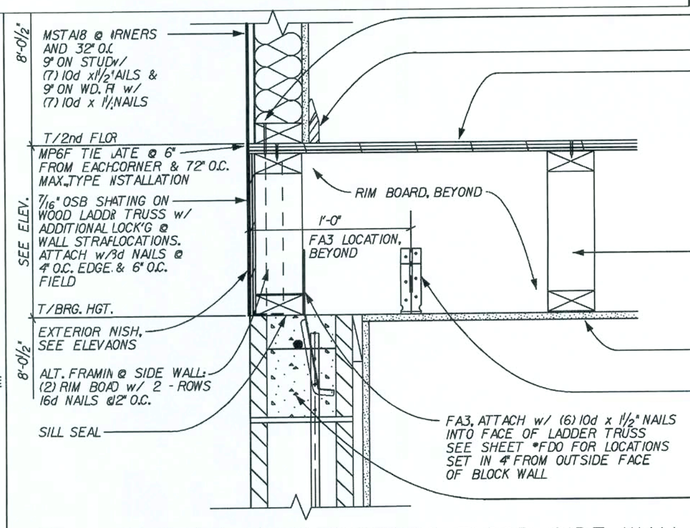

E — PARTIAL SECTION-TRUSS FLOOR SIDE WALL

REVISED 05-02-07
FLOOR DECK NAIL'G

SCALE: 1½" = 1'-0"

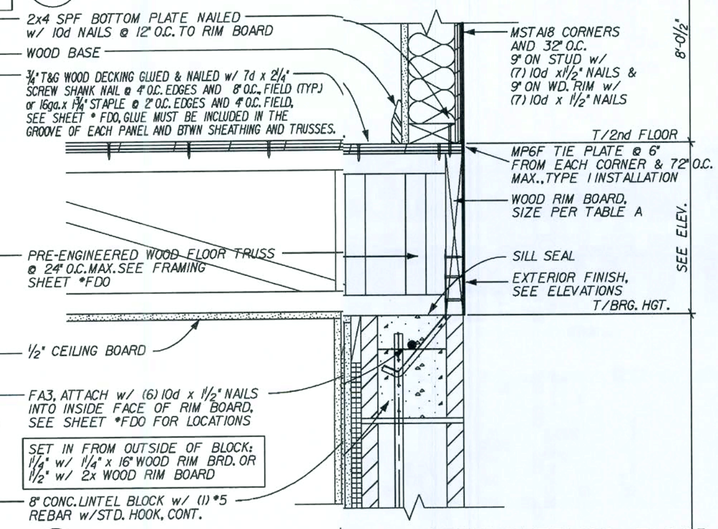

B — WALL SECTION-TRUSS FLOOR

REVISED 05-02-07
FLOOR DECK NAIL'G

SCALE: 1½" = 1'-0"

TABLE A		
TRUSS DEP.	RIM BD.	# NAILS, RIM BRD. TO FLOOR TRUSS
9¼"	2x10	(4) 10d NAILS
16"	1¼" x 16"	(6) 10d NAILS

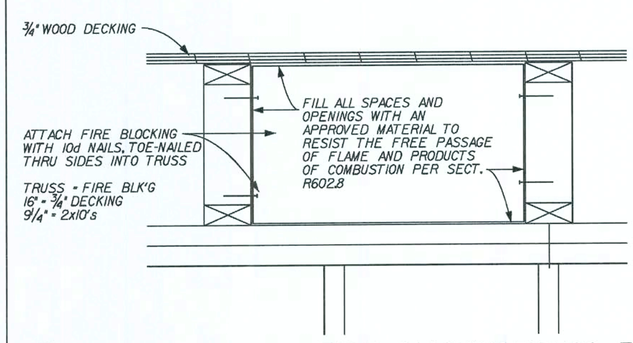

F — FIRE BLOCKING-TRUSS FLOOR

REVISED 05-05-06
REV. NOTE @ OPENINGS

SCALE: 1½" = 1'-0"

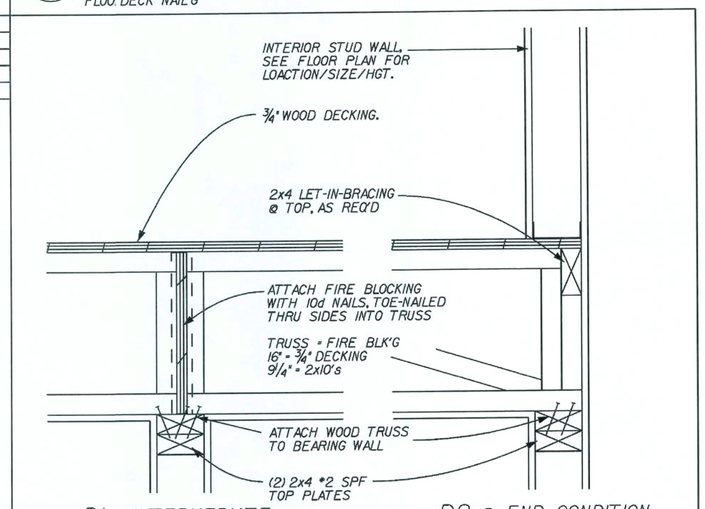

D — TYPICAL INTERIOR BEARING WALL-TRUSS FLOOR

REVED 01-04-07
LET-BRACING NOTE

SCALE: 1½" = 1'-0"

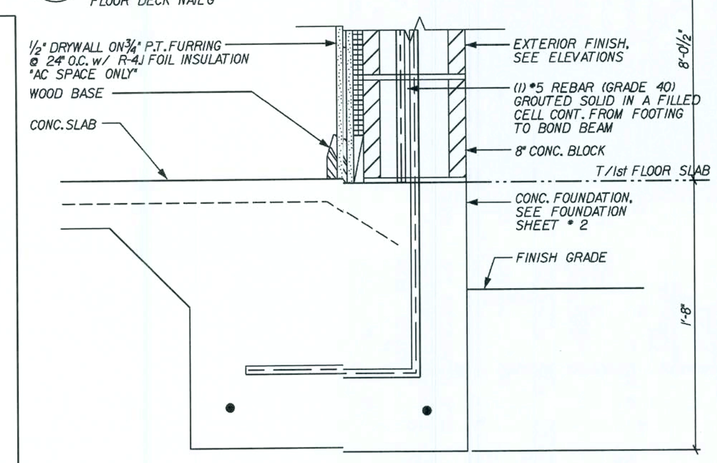

A — WALL SECTION-FOUNDATION @ BLOCK

REVISED 02-19-07
FOIL INSUL TO R-4.1

SCALE: 1½" = 1'-0"

FLORIDA BUILDING CODE 2004 : RESIDENTIAL

REVISIONS :

COPYRIGHT © 2005 MARONDA HOMES

Maronda Homes

4005 MARONDA WAY SANFORD, FLORIDA (407) 321-0064

TWO STORY — WALL SECTIONS

SUNBURY-NEWBERRY

GARAGE:

DRAWN BY:

RELEASE DATE: 10-08-04

PLOT DATE: 26 JUN 2007

14:41:42

p:\fl\houses_05\sunbury\dflt\std_ws-s1.ws

05

Maronda Systems
4005 Maronda Way
Sanford, FL 32771
(407)321-0064

Tomas Ponce P.E.
License No. 0050068

OCT 10 2007

SHEET:

WS-S1

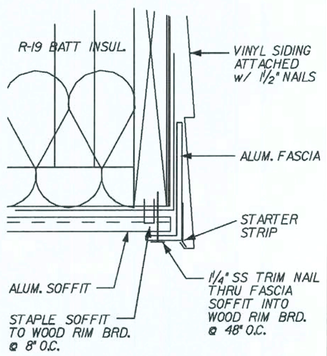

F SOFFIT CONNECTION-TRUSS FLOOR

SCALE: 3" = 1'-0"

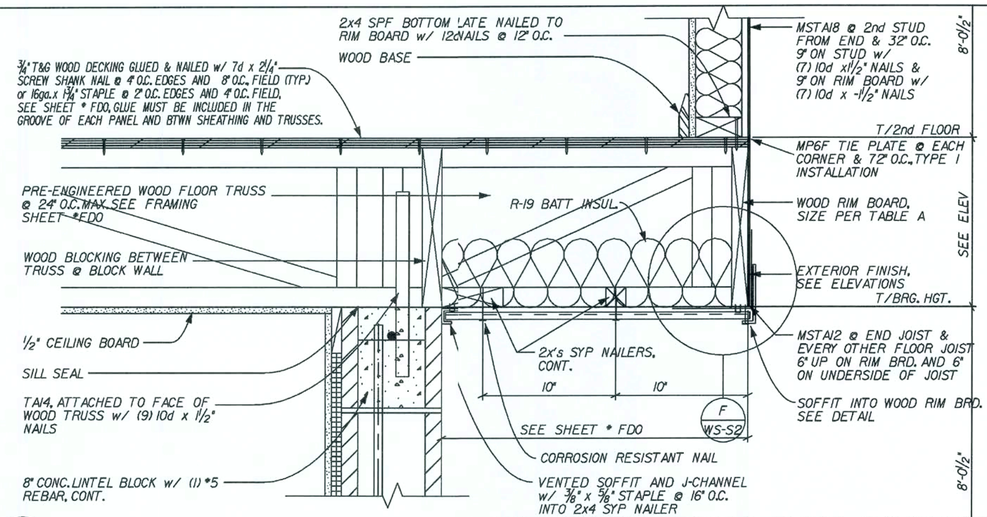

E WALL SECTION-TRUSS FLOOR OVERHANG

REVISED 05-02-07 FLOOR DECK NAIL'G

SCALE: 1½" = 1'-0"

TABLE A		
TRUSS DEP.	RIM B.	* NAILS, RIM BRD. TO FLOOR TRUSS
9¼"	2x10	(4) 10d NAILS
16"	1¼" .16"	(6) 10d NAILS

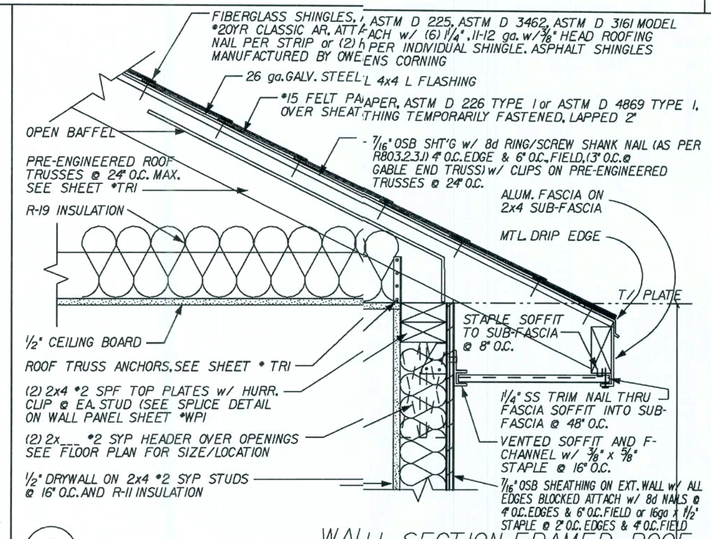

C WALL SECTION-FRAMED ROOF

REVISED 05-02-07 - OSB ROOF NAIL TYPE

SCALE: 1½" = 1'-0"

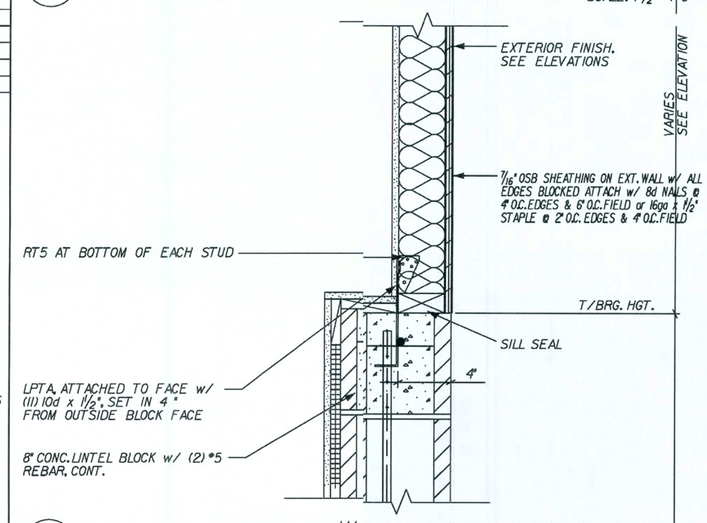

B WALL SECTION-OPEN SPACE

REVISED 04-16-07 - STAPLES @ OSB WALLS

SCALE: 1½" = 1'-0"

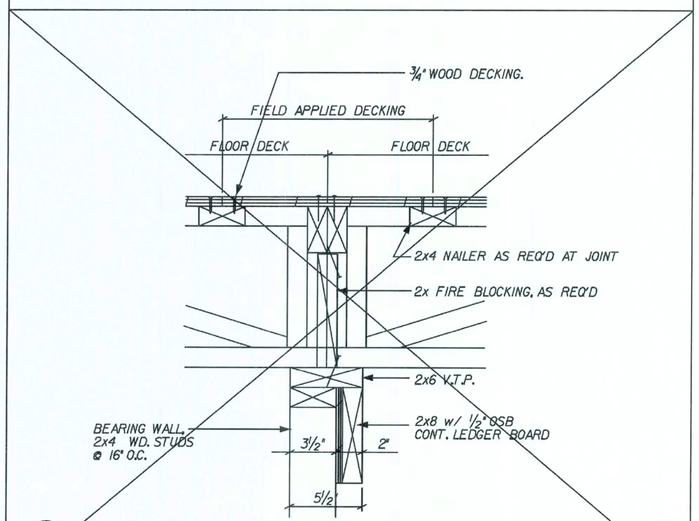

H PANEL JOINT @ BEARING WALL-TRUSS FLOOR

REVISED 12-20-05 : REV. *9 SCREW TO *10 SCREW

NOT USED

SCALE: 1½" = 1'-0"

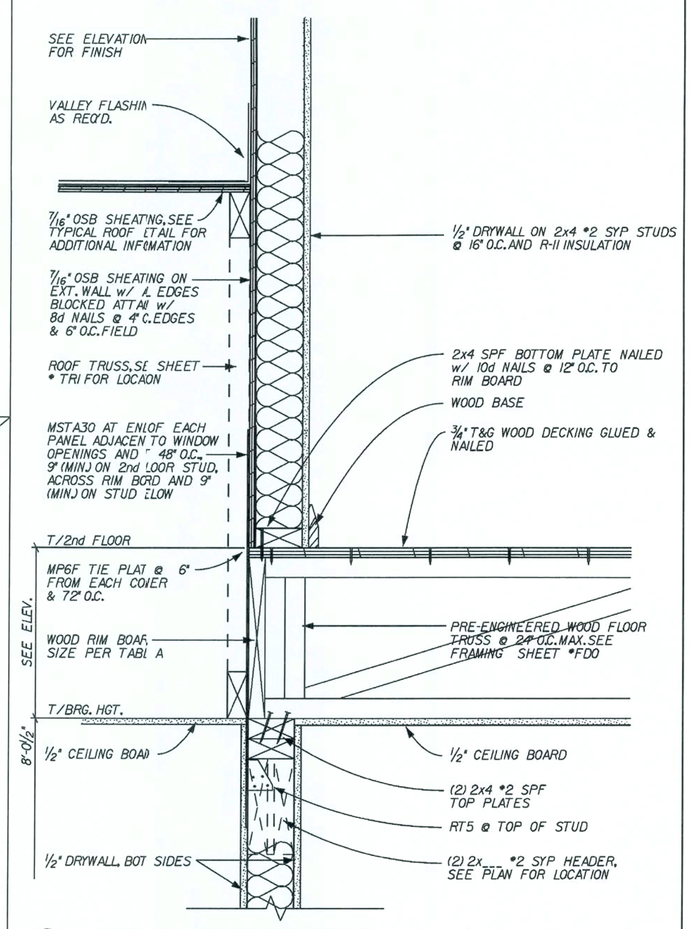

D PARTIAL SECTION-TRUSS FLOOR/BEARING WALL

REVISED 11-04-07 FLOOR DECK NAIL'G

SCALE: 1½" = 1'-0"

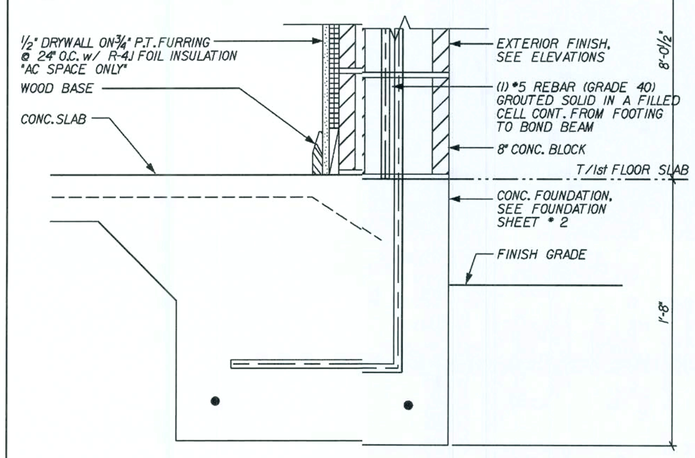

A WALL SECTION-FOUNDATION @ BLOCK

REVISED 02-19-07 FOIL INSUL TO R-4J

SCALE: 1½" = 1'-0"

REVISIONS :

COPYRIGHT © 2005 MARONDA HOMES

Maronda Homes
(407) 321-0064 4005 MARONDA WAY SANFORD, FLORIDA

TWO STORY WALL SECTIONS

SUNBURY-NEWBERRY

DRAWN BY: GARAGE:

RELEASE DATE: 10-08-04

Maronda Systems
4005 Maronda Way
Sanford, FL 32771
(407)321-0064

Tomas Ponce P.E.
License No. 0050068

OCT 10 2007

SHEET: WS-S2

PLOT DATE: 26 JUN 2007 14:41:43 P:\V7houses_05\sunbury\dtl\s\std_ws-s2.sws

FLORIDA BUILDING CODE 2004 : RESIDENTIAL

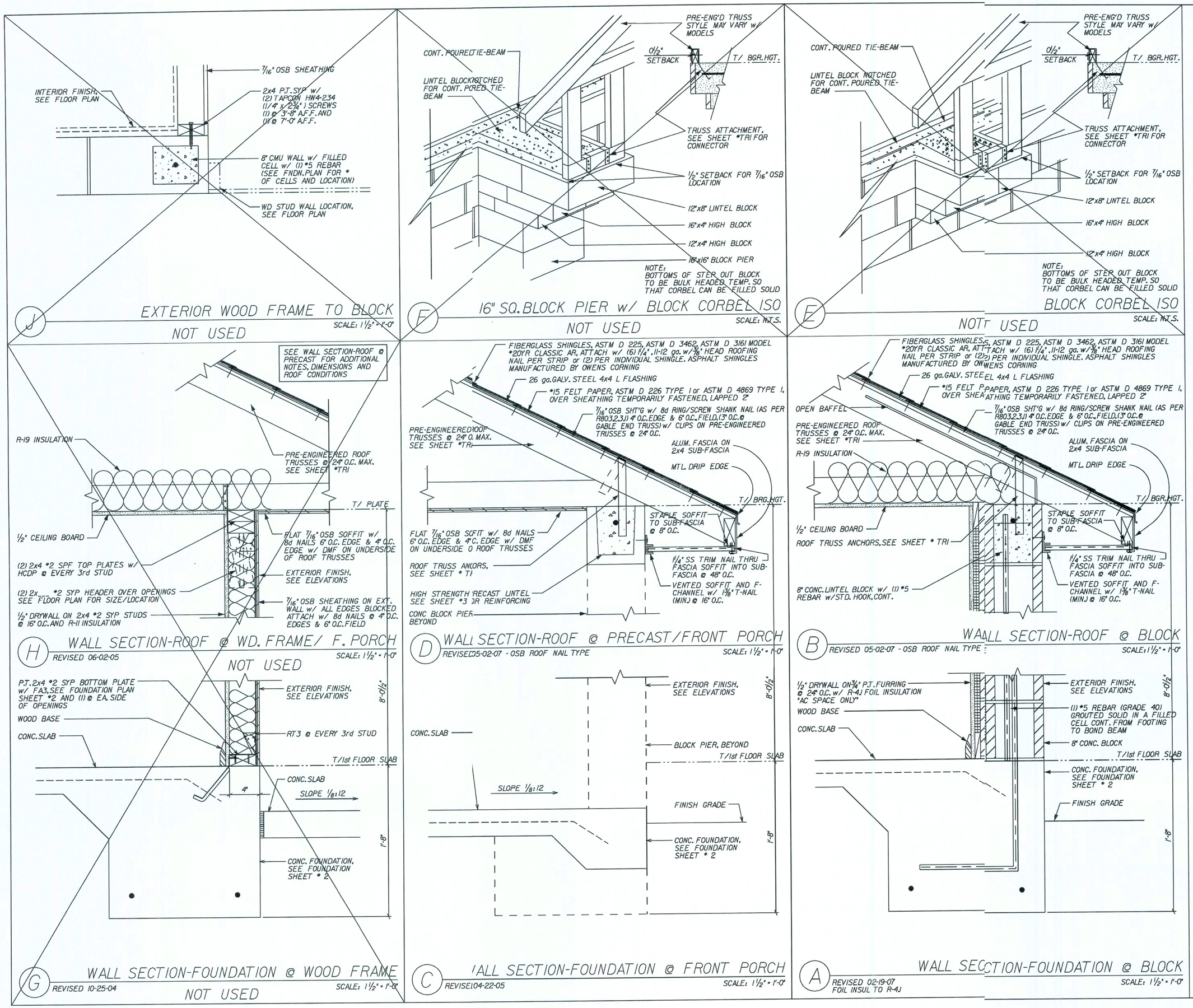

REVISIONS :

COPYRIGHT © 2005 MARONDA HOMES

Maronda Homes

(407) 321-0064 4005 MARONDA WAY SANFORD, FLORIDA

ONE STORY WALL SECTIONS

SUNBURY-NEWBERRY

GARAGE:

DRAWN BY:

RELEASE DATE: 10-08-04

Maronda Systems
4005 Maronda Way
Sanford, FL 32771
(407)321-0064

Tomas Ponce P.E.
License No. 0050068

OCT 10 2007

SHEET:

WS-B1

PLOT DATE: 26 JUN 2007 14:41:44

p:\1houses_05\sunbury\dtls\std_ws-b1.sws

FLORIDA BUILDING CODE 2004 : RESIDENTIAL

USP HARDWARE - 160% REVISED 05-10-06

PRODUCT CODE #	MAN.	FASTENERS	UPLIFT
C44	USP	POST (6) 16d BEAM (6) 10d X 1½"	1000
FA3	USP	TOP (4) 10d X 1½" SIDE (2) 10d X 1½"	1155
HC520 CLIP	USP	PLATES (11) 8d STUD (6) 8d	445
HHCP2 CRNR CLIP	USP	TRUSS (10) 10d X 1½" PLATE (10) 10d X 1½"	800
HTA 20 ANCHOR	USP	(14) 10d X 1½"	1615
HTA 20(2) ANCHOR	USP	(13) 10d X 1½"	3230
HTW24	USP	(20) 10d	1325
HUGT2	USP	CONC. ANC.BOLT (2)3/4"-(2)¾"WASH 3¼" EMBED. -ALL GRDR.-(8) 10d	9790
HUGT3	USP	CONC. ANC.BOLT (2)3/4"-(2)¾"WASH 3¼" EMBED. -ALL GRDR.-(8) 10d	9860
JUS 26	USP	(4) 10d HEADER (4) 10d TRUSS	1115
KST227 STRP ANC.	USP	(34) 16d	4750
LPTA	USP	FACE OF GABLE W/ 2x4 (11) 10d x 1½"	1250
LSTA36	USP	(22) 10d X 1½"	1640
LTW12	USP	(12) 10d	670
LTS20 STRAP ANC	USP	ANCHOR-1/2" WEDGE BOLT 3¼" EMBED. (10) 10d X 1½"STRAP	1890
LBP12 BEARING PLT	USP	½" J-BOLT	2515
LFTA6	USP	PLATE (8) 8d STUD (8) 8d	1035
MP6F	USP	HEADER/STUD (6) 8d TYPE 1 JOIST/PLATE (6) 8d	605
MPAI & MPAIF	USP	HEADER/STUD (6) 8d JOIST/PLATE (6) 8d	660
MSTAI2	USP	(10) 10d	1015
MSTAI8	USP	(14) 10d	1420
MSTA24	USP	(18) 10d	1640
MSTA30	USP	(22) 10d	2065
MTW12	USP	(14) 10d	1030
MTW18	USP	(14) 10d	1030
MTS27B STRP ANC	USP	(24) 16d (1)¾" ANCHOR BOLT 3¼" EMBEDDED	4635
MUGT15	USP	(22) 10d (1)⅝" ANCHOR BOLT 3¾" EMBEDDED	4165
NP37 3⅛X 7	USP	HEADER (6) 16d TOP OF BOT. SEC.(6) 10d X 1½"	
PA 28	USP	(15) 16d	3360
RT-16	USP	TOP PLATES (8) 8d TRUSS (8) 8d X 1½"	1030
RT-16A	USP	TRUSS (9) 10d x 1½" PLATE (8) 10d	1380
RT16-2	USP	TOP PLATES (8) 8d TRUSS (8) 8d X 1½"	1160
RT5 CLIPS L/R	USP	TRUSS (4) 8d PLATE (4) 8d	540
RT3 CLIPS L/R	USP	(4) 8d TOP (4) 8d BOTTOM	530
SKH 26 L\R	USP	HEADER (6) 16d JACK (6) 10d X 1½"	1085
SKHH26 L/R	USP	HEADER (18) 16d JACK (12) 10d X 1½"	2190
SUH 26	USP	HEADER (6) 10d JACK (4) 10d X 1½"	725
SUH 28	USP	HEADER (8) 10d JACK (6) 10d X 1½"	800
TAI2 TA 12/METAL	USP	(5) #10 SCREWS (9) #10 SCREWS	825 910
TA 14	USP	(7) 10d x 1½"	920
TA 18	USP	(8) 10d x 1½"	1205
(2)TA 18	USP	(8) 10d x 1½" 1-PLY (8) 10d x 1½" 2-PLY	2410 2410
TA 24	USP	(8) 10d x 1½"	1205
(2)TA 24	USP	(8) 10d x 1½" 1-PLY (8) 10d x 1½" 2-PLY	2410 2410
THD26	USP	HEADER (18) 16d TRUSS (12) 10d X 1½"	2170
THD28	USP	HEADER (28) 16d TRUSS (16) 10d X 1½"	2330
THD28-2	USP	HEADER (28) 16d TRUSS (16) 10d X 1½"	2485
THDH28-3	USP	HEADER (36) 16d TRUSS (16) 10d X 1½"	2665
THD48	USP	HEADER (28) 16d TRUSS (16) 10d X 1½"	2485
THJ 26 2	CLEVELAND	HIP(7)10d-HEADER(16)16d JACK (5) 10d x1½"	1010
USC63	USP	TRUSS (8) 10d (4)¾" EXP. BOLTS #6170 2¾" EMBEDDED	1150
USC3F	USP	TRUSS (8) 10d (4)¾" EXP. BOLTS #6170 2¾" EMBEDDED	1150
USC73	USP	TRUSS (8) 16d (4)¾" EXP. BOLTS #6170 2¾" EMBEDDED	1150
UGTS63	USP	TRUSS (8) 16d (2)¾" ANC. BOLTS 2¾"" EMBEDDED	6170

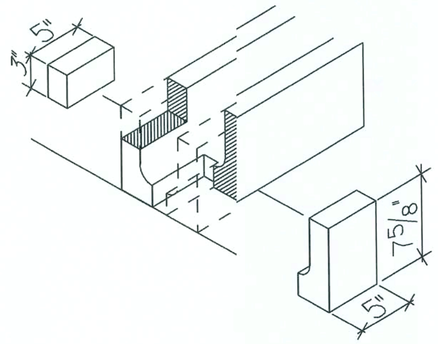

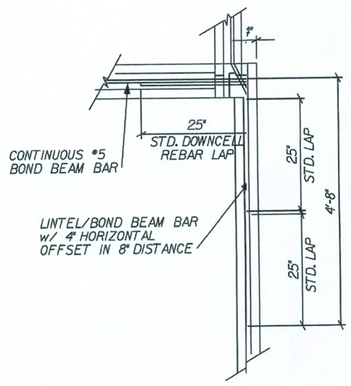

MODIFIED LINTEL@ FRONT PORCH

SCALE: N.T.S.

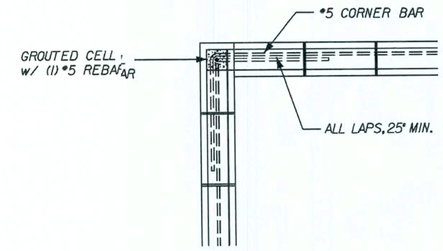

TYPICAL BOND BEAM @ CORNER

REVISED 04-22-05

SCALE: ½" = 1'-0"

CONNECTOR	MAX. UPLIFT
LTW12	775 LBS
LFTA6	990 LBS
RT16	700 LBS

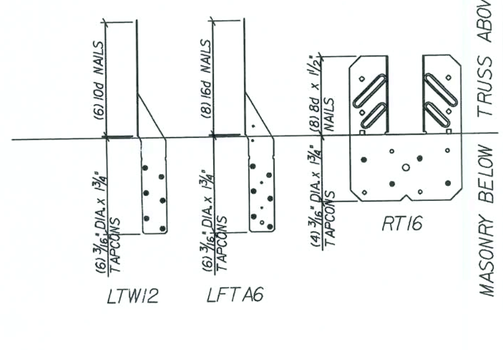

FOR MISSED FLOOR ANCHORS, CONSULT ENGINEER STAFF

ANCHOR FASTENING SCHEDULE
MISSED ROOF TIE DOWN REPAIR

SCALE: N.T.S.

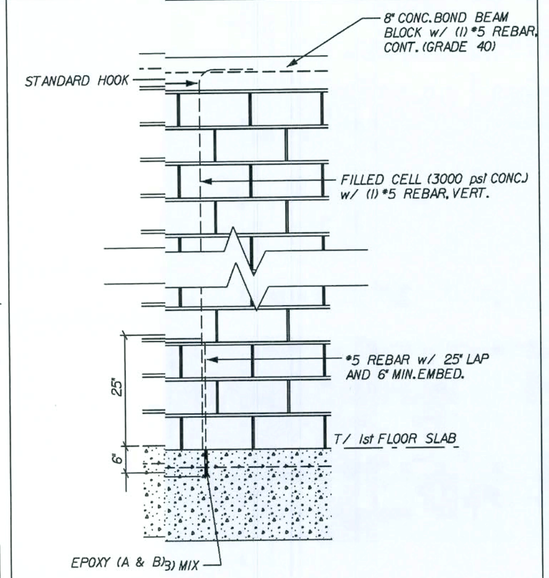

MISSED DOWN ROD REPAIR

SCALE: ½" = 1'-0"

CERAMIC TILE TO CARPET

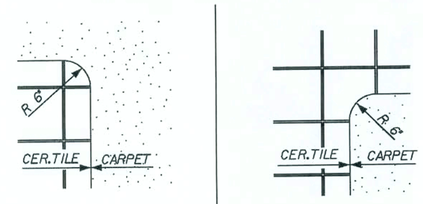

OUTSIDE CORNER INSIDE CORNER

VINYL TO CARPET

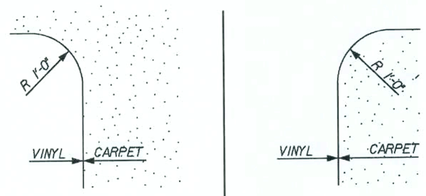

OUTSIDE CORNER INSIDE CORNER

FLOOR EDGE CORNER DETAIL

SCALE: ½" = 1'-0"

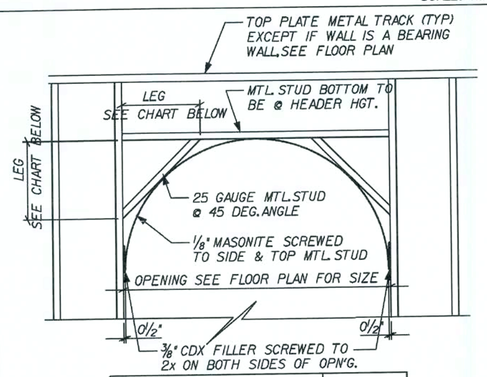

OPENING	LEGS
2'-1" - 2'-0" ARCH OPENING	7½"
2'-7" - 2'-6" ARCH OPENING	8⅞"
2'-9" - 2'-8" ARCH OPENING	9 7/16"
3'-1" - 3'-0" ARCH OPENING	10⅝"
4'-1" - 4'-0" ARCH OPENING	15"
-	-

INTERIOR CURVED ARCH

SCALE: ½" = 1'-0"

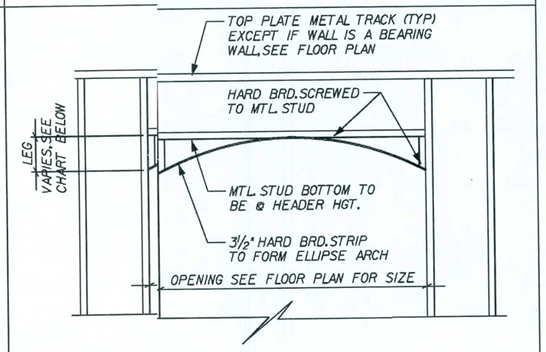

OPENING	LEGS
2'-0" - 3'-1"	4"
3'-2 "- 4'-0"	5½"
4'-1"- 5'-0"	6½"
5'-1" - 7'-0"	8"
7'-1 "- 9'-0"	9½"
9'-1"- 12'-0"	12"

INTERIOR ELLIPSE ARCH

SCALE: ½" = 1'-0"

REVISIONS :

COPYRIGHT © 2005 MARONDA HOMES

Maronda Homes
(407) 321-0064 4005 MARONDA WAY SANFORD, FLORIDA

AMERICANA STANDARD DETAILS
SUNBURY-NEWBERRY

DRAWN BY: GARAGE:
RELEASE DATE: 10-08-04

Maronda Systems
4005 Maronda Way
Sanford, FL 32771
(407)321-0064

Tomas Ponce P.E.
License No. 0050068

OCT 10 2007

SHEET: SD1

p:\houses_05\sunbury\dtls\std_details.sdl

PLOT DATE: 26 JUN 2007 14:41:45

FLORIDA BUILDING CODE 2004 : RESIDENTIAL

REVISED 02-15-07
83 3/4" -> 82 7/8"

DOOR SCHEDULE

DOOR TYPE	ACTUAL SIZE	ROUGH FRAME OPENING	ROUGH BLOCK OPENING 2" BUCK
2-0 STANDARD I.S.	25 1/2" x 80 5/8"	26" x 80 7/8"	29" x 82 3/8"
2-8 STANDARD I.S.	33 1/2" x 80 5/8"	34" x 80 7/8"	37" x 82 3/8"
2-10 STANDARD I.S.	35 1/2" x 80 5/8"	36" x 80 7/8"	39" x 82 3/8"
3-0 STANDARD I.S.	37 1/2" x 82"	38" x 82 1/4"	41" x 82 7/8"
3-0 w/SIDELIGHT I.S.	51 1/8" x 82"	51 5/8" x 82 1/4"	54 5/8" x 82 3/8"
3-0 w/(2) SIDELIGHT I.S.	64 1/2" x 82"	65" x 82 1/4"	68" x 82 3/8"
5-8 (2)2-10 FRENCH I.S.	70 1/2" x 80 5/8"	71" x 80 7/8"	74" x 82 3/8"

** FINISH OPENING IS DETERMINED BY ACTUAL SIZE +1/4" FOR HEIGHT
** FINISH OPENING IS DETERMINED BY ACTUAL SIZE +1/2" FOR WIDTH
** O.S.= OUTSWING
** I.S.= INSWING

MAX. OPNG SIZE	JACKS @ EA.END	HEADER SIZE	STUDS @ EA.END 8'-0" MAX.HGT.	STUDS @ EA.END 10'-0" MAX.HGT.	
2'-3"	(1)	2x HEADER, SEE FLOOR PLAN FOR PROPER SIZE FRAMING	1	2	
3'-3"	(1)		2	2	
6'-3"	(1)		2	3	

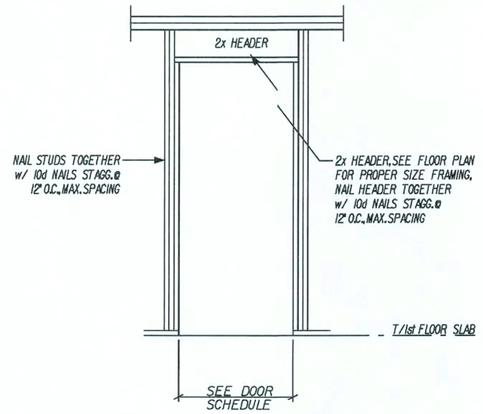

K STD.DOOR - WD FRAME,NO-UPLIFT
SCALE: N.T.S.

MAX. OPNG SIZE	JACKS @ EA.END	HEADER SIZE	STUDS @ EA.END 8'-0" MAX.HGT.	STUDS @ EA.END 10'-0" MAX.HGT.	MSTA 12
2'-3"	(1)	2x HEADER, SEE FLOOR PLAN FOR PROPER SIZE FRAMING	1	2	N/A
3'-3"	(1)		2	2	(1) @ CEN.OF HDR.
6'-3"	(1)		2	3	(1) @ 2'-0" OFF EA.END OF HDR.

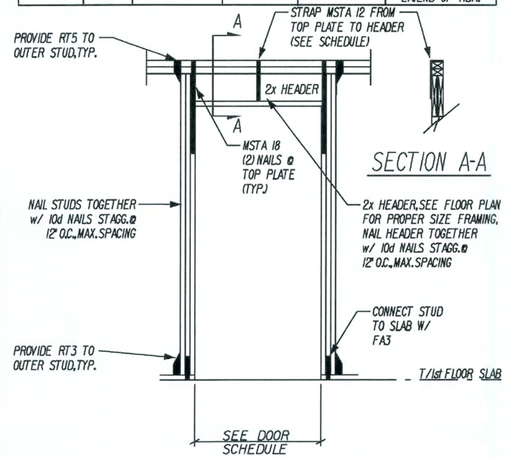

J STD.DOOR - WD FRAME,UPLIFT
SCALE: N.T.S.

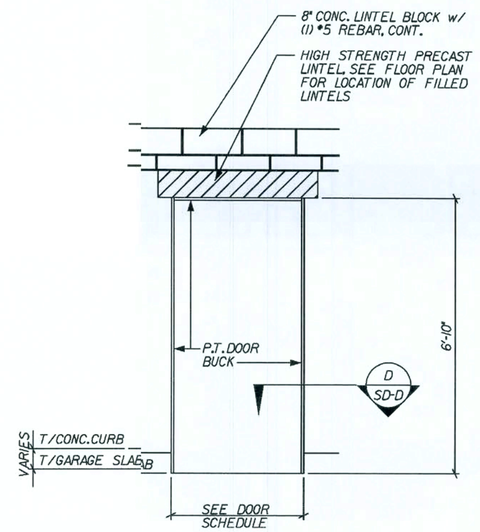

H OPTIONAL SERVICE DOOR
REVISED 08-12-2-04
SCALE: 3/8" = 1'-0"

CONTRACTOR NOTE:
INSTALLATION FOR GARAGE DOOR TYPES (AS PER TEST #960507-A)

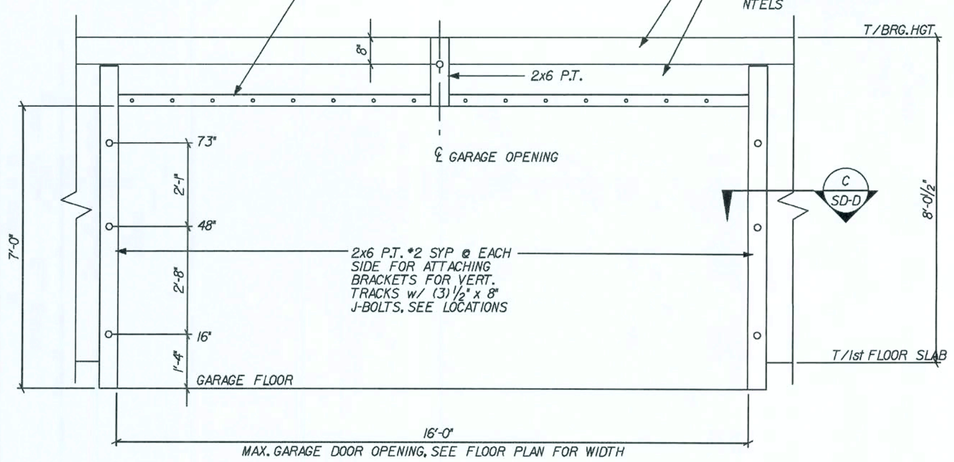

G GARAGE DOOR ELEVATION
SCALE: 3/8" = 1'-0"

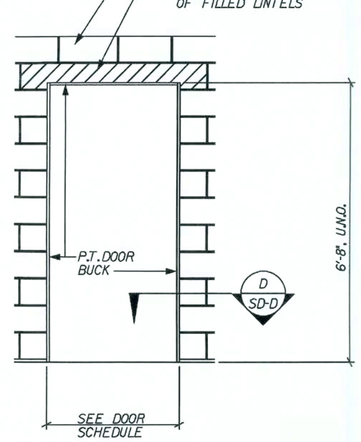

F STANDARD DOOR ELEVATION
SCALE: 3/8" = 1'-0"

CONTRACTOR NOTE:
FOR INSTALLATION SIZES OF NORANDEX SLIDING DOORS SERIES 500 UP TO 8'-0" x 6'-8" AS PER #96-0131J0 & SERIES 502 UP TO 8'-0" x 8'-0" MAX. (AS PER TEST #96-0606.08.20)

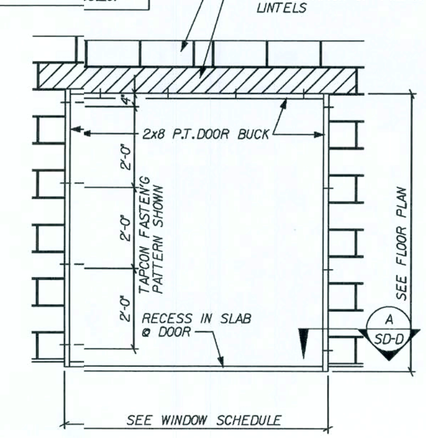

E SLIDING GLASS DOOR ELEVATION
SCALE: 3/8" = 1'-0"

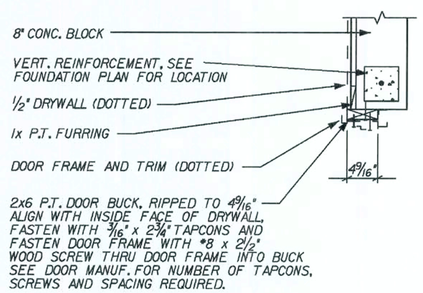

D 2x DOOR BUCK DETAIL
SCALE: 3/4" = 1'-0"

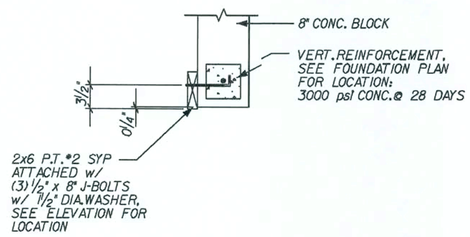

C GARAGE DOOR BUCK DETAIL
SCALE: 3/4" = 1'-0"

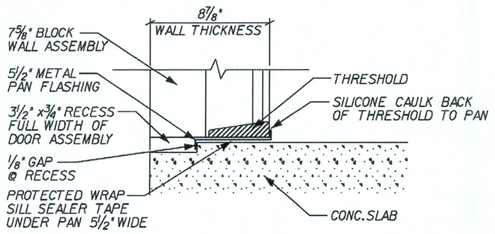

B DOOR PAN FLASHING
REVISED 06-08-06
NEW DETAIL
SCALE: 3/4" = 1'-0"

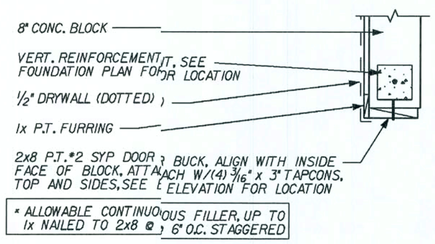

* ALLOWABLE CONTINUOUS FILLER, UP TO 1x NAILED TO 2x8 @ 6" O.C. STAGGERED

A SLIDING GLASS DOOR BUCK DETAIL
REVISED 10-21-04
SCALE: 3/4" = 1'-0"

REVISIONS :
06-12-06 ADDED DOOR PAN DETAIL

COPYRIGHT © 2005 MARONDA HOMES

Maronda Homes
(407) 321-0064 4005 MARONDA WAY SANFORD, FLORIDA

05

DOORS STANDARD DETAILS
SUNBURY-NEWBERRY
GARAGE:
DRAWN BY:
RELEASE DATE: 10-08-04

Maronda Systems
4005 Maronda Way
Sanford, FL 32771
(407)321-0064

Tomas Ponce P.E.
License No. 0050068

OCT 10 2007

SHEET:
SD-D

PLOT DATE: 26 JUN 2007 14:41:45
p:\1houses_05\sunbury\dtls\std_doors.sldd

FLORIDA BUILDING CODE 2004 : RESIDENTIAL

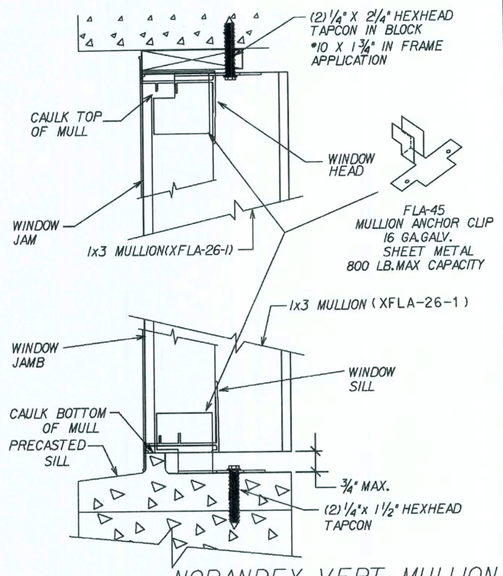

NORANDEX VERT. MULLION CLIP STYLE FLA-45

SCALE: 3/4" = 1'-0"

CONTRACTOR NOTE:
FOR INSTALLATION SIZS OF NORANDEX WINDOW SEIES 437/438 UP TO 53 1/8" 76 3/8" AS PER TEST #96-062.20

STANDARD WINDOW DE'AILS IN BLOCK WALLS UP TO) FEET HIGH

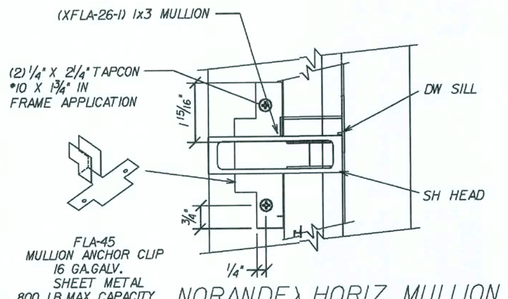

NORANDE) HORIZ. MULLION CLI' STYLE FLA-45

SCALE: 3/4" = 1'-0"

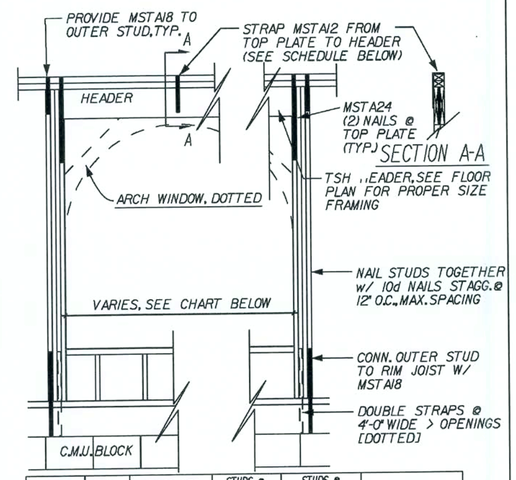

MAX. OPN'G SIZE	JACKS @ EA.END	HEADER SIZE	STUDS @ EA.END 8'-0" MAX.HGT.	STUDS @ EA.END 10'-0" MAX.HGT.	MSTA 12
2'-3"	(1)	2x HEADER. SEE FLOOR PLAN FOR PROPER SIZE FRAMING	1	2	N/A
3'-3"	(1)		1	2	(1) @ CEN.OF HDR.
6'-3"	(2)		2	3	(1) @ 2'-0" OFF EA.END OF HDR.

K — TYP.HEADER DETAIL-2ND FLOOR FRAMING

REVISED 06-06-07 : PER WALL PANELS

SCALE: N.T.S.

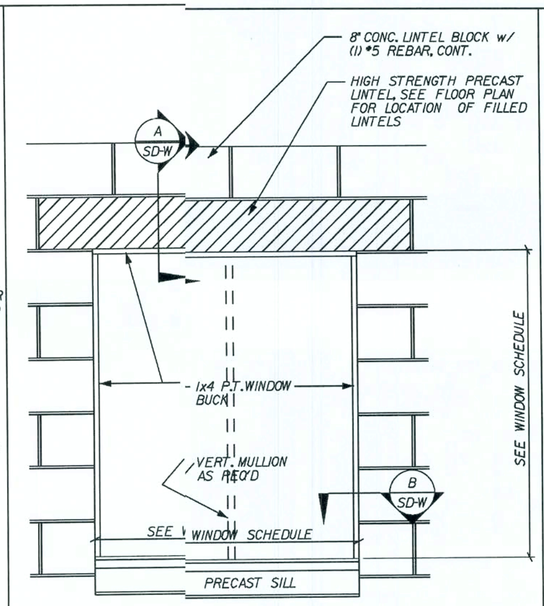

J — WINDOW-STANDARD-BLK

SCALE: 3/4" = 1'-0"

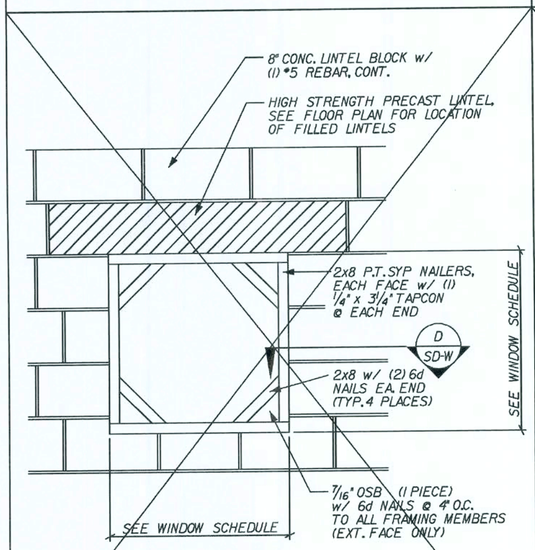

H — WINDOW-OCTAGON-BLK

NOT USED

SCALE: 3/4" = 1'-0"

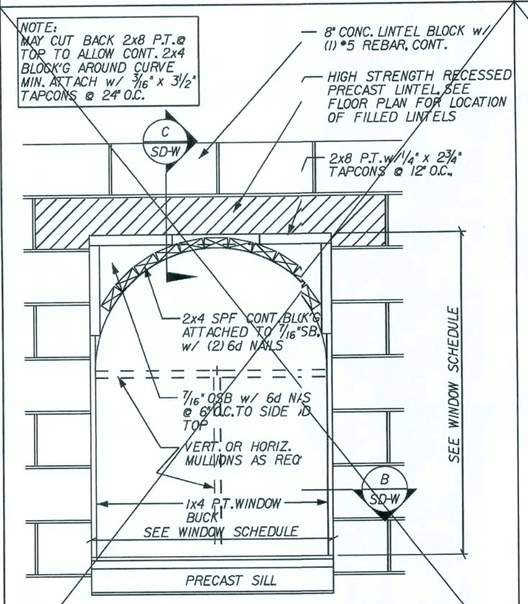

G — WINDOW-1/2 ROUND TOP-BLK

NOT USED

SCALE: 3/4" = 1'-0"

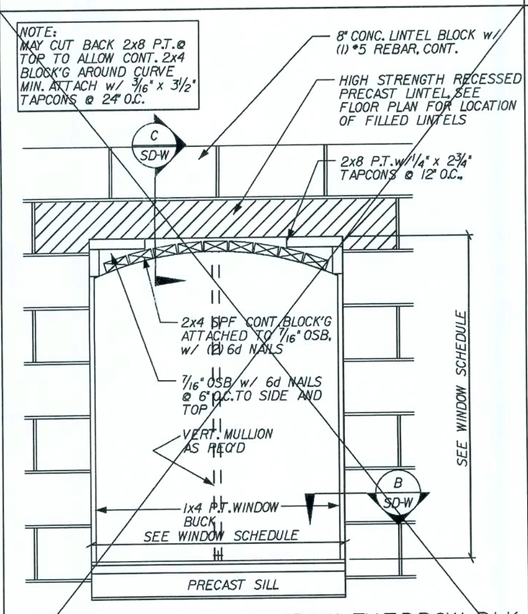

F — WINDOW-EYEBROW-BLK

NOT USED

SCALE: 3/4" = 1'-0"

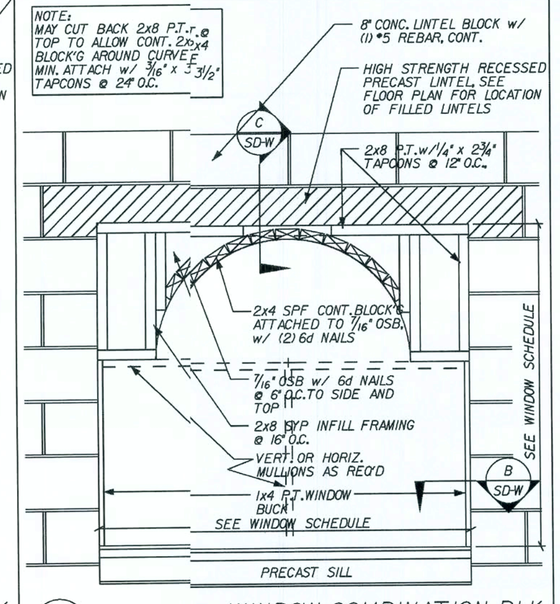

E — WINDOW-COMBINATION-BLK

SCALE: 3/4" = 1'-0"

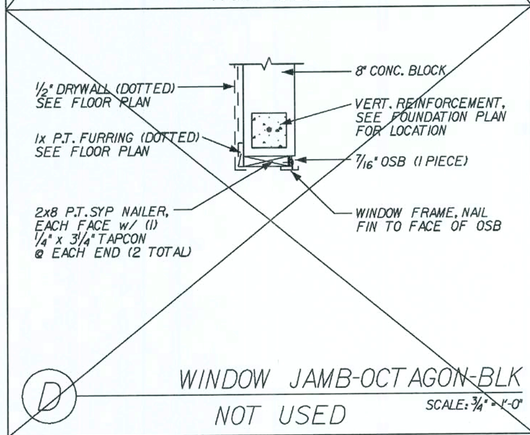

D — WINDOW JAMB-OCTAGON-BLK

NOT USED

SCALE: 3/4" = 1'-0"

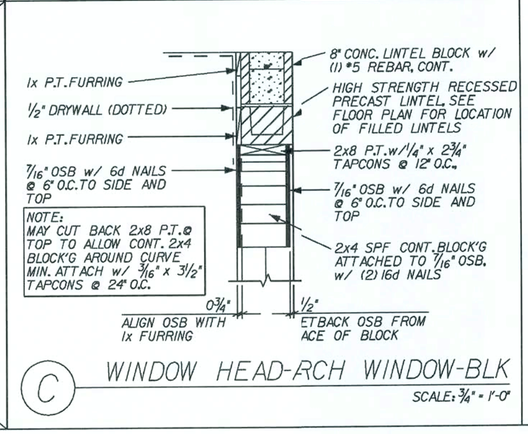

C — WINDOW HEAD-RCH WINDOW-BLK

SCALE: 3/4" = 1'-0"

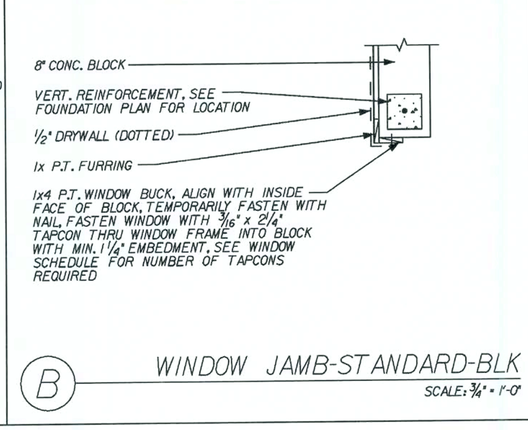

B — WINDOW JAMB-STANDARD-BLK

SCALE: 3/4" = 1'-0"

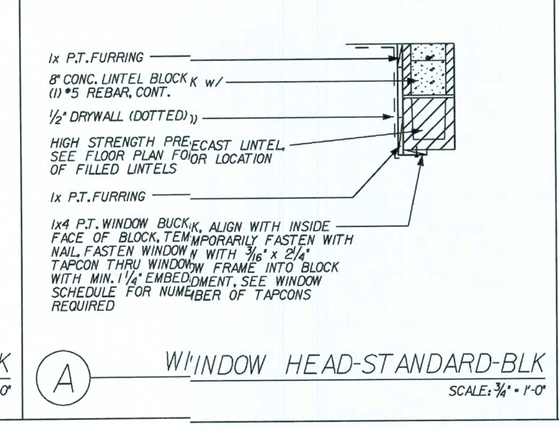

A — WINDOW HEAD-STANDARD-BLK

SCALE: 3/4" = 1'-0"

REVISIONS :

COPYRIGHT © 2005 MARONDA HOMES

Maronda Homes

(407) 321-0064 4005 MARONDA WAY SANFORD, FLORIDA

05

WINDOWS | STANDARD DETAILS

SUNBURY-NEWBERRY

GARAGE:

DRAWN BY:

RELEASE DATE: 10-08-04

14:41:46

Maronda Systems
4005 Maronda Way
Sanford, FL 32771
(407)321-0064

Tomas Ponce P.E.
License No. 0050068

OCT 10 2007

SHEET:

SD-W

PLOT DATE: 26 JUN 2007

p:\1\houses_05\sunbury\dtls\std_windows.sdw

FLORIDA BUILDING CODE 2004 : RESIDENTIAL

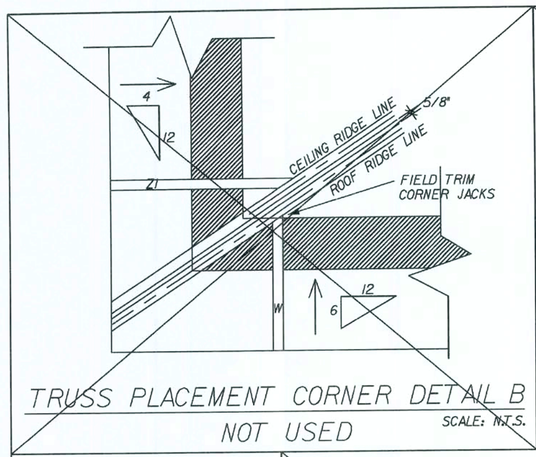

TRUSS PLACEMENT CORNER DETAIL B

NOT USED

SCALE: N.T.S.

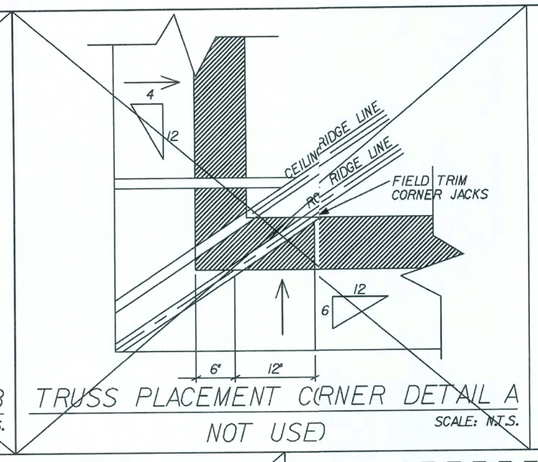

TRUSS PLACEMENT CORNER DETAIL A

NOT USED

SCALE: N.T.S.

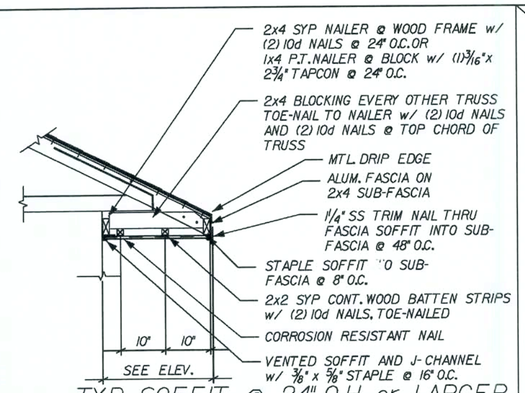

TYP. SOFFIT @ 24" O.H. or LARGER

REVISED 01-11-05

SCALE: 1/2" = 1'-0"

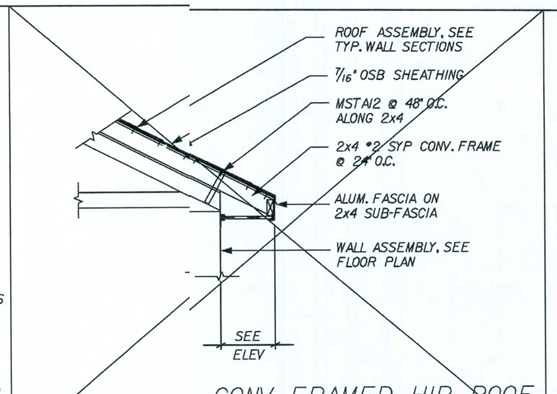

CONV. FRAMED HIP ROOF

NOT USED

SCALE: 1/2" = 1'-0"

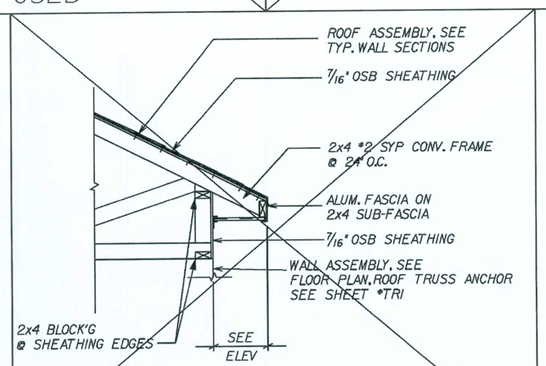

DETAIL @ RAISED HEEL

NOT USED

SCALE: 1/2" = 1'-0"

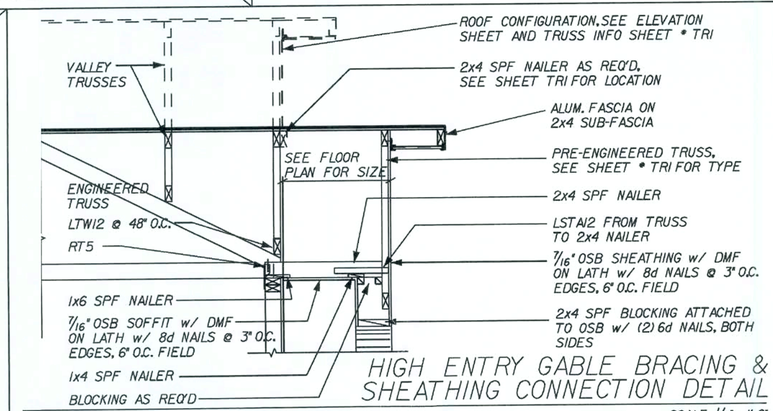

NOTE: GABLE BRACED BY ROOF AND/OR CEILING DIAPHRAGM STRIGBACK AND CONNECTIONS, NO X-BRACING NEEDED.

HIGH ENTRY GABLE BRACING & SHEATHING CONNECTION DETAIL

ELEV.- I,J,P,T ONLY

SCALE: 1/2" = 1'-0"

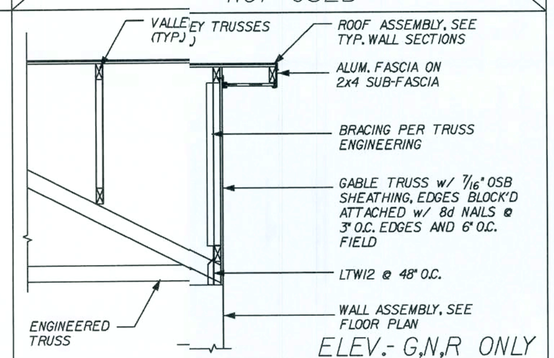

ELEV.- G,N,R ONLY

FALSE GABLE BRACING & SHEATHING CONNECTION DETAIL

NOTE: GABLE BRACED BY ROOF AND/OR CEILING DIAPHRAGM STRONGBACK AND CONNECTIONS, NO X-BRACING NEEDED.

SCALE: 1/2" = 1'-0"

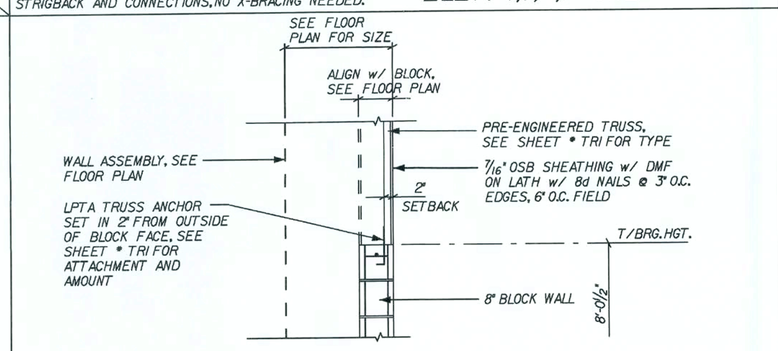

TRUSS / BLOCK CONNECTION DETAIL

SCALE: 1/2" = 1'-0"

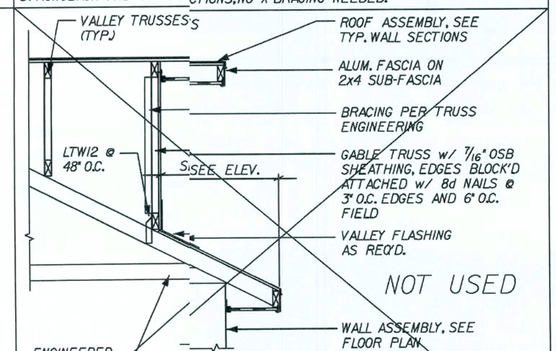

NOT USED

REVERSE GABLE BRACING & SHEATHING CONNECTION DETAIL

NOTE: GABLE BRACED BY ROOF AND/OR CEILING DIAPHRAGM STRONGBACK AND CONNECTIONS, NO X-BRACING NEEDED.

SCALE: 1/2" = 1'-0"

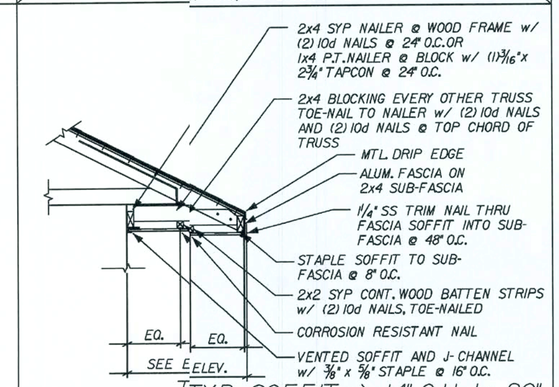

TYP. SOFFIT > 14" O.H. to 20"

REVISED 12-20-06

SCALE: 1/2" = 1'-0"

REVISIONS :

COPYRIGHT © 2005 MARONDA HOMES

Maronda Homes

(407) 321-0064 4005 MARONDA WAY SANFORD, FLORIDA

05

ROOF STANDARD DETAILS

SUNBURY-NEWBERRY

GARAGE:

DRAWN BY:

RELEASE DATE: 10-08-04

Maronda Systems
4005 Maronda Way
Sanford, FL 32771
(407)321-0064

Tomas Ponce P.E.
License No. 0050068

OCT 10 2007

SHEET:

SD-R

PLOT DATE: 26 JUN 2007 14:41:47

pw:\\houses_05\sunbury\atlis\std_roof.sdr

FLORIDA BUILDING CODE 2004 : RESIDENTIAL

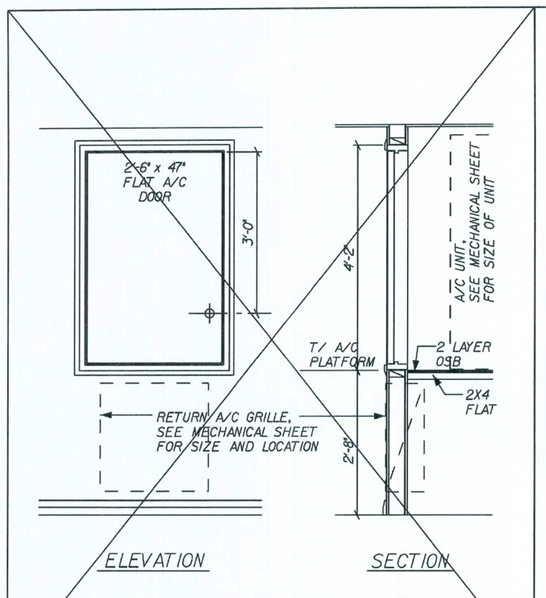

7'-0" CEIL. ENCLOSED A/C PLATFORM

NOT USED

SCALE: 1/2" = 1'-0"

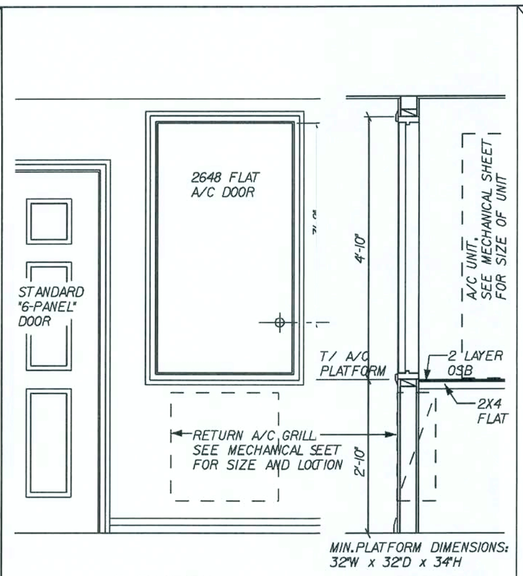

ENCLOSED A/C PLATFORM

SCALE: 1/2" = 1'-0"

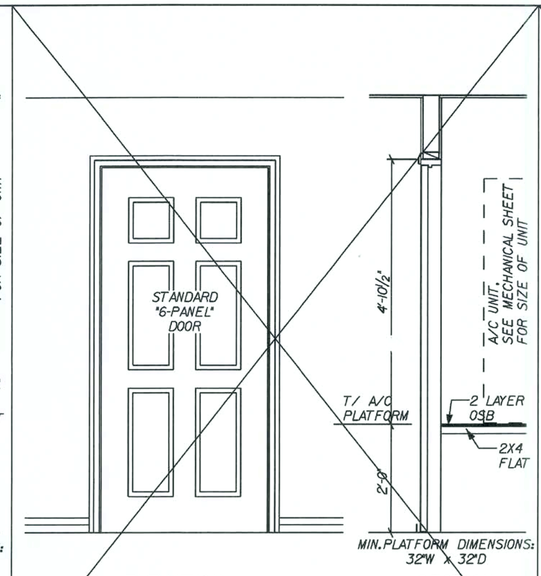

FULL DOOR ENCLOSED A/C PLATFORM

NOT USED

SCALE: 1/2" = 1'-0"

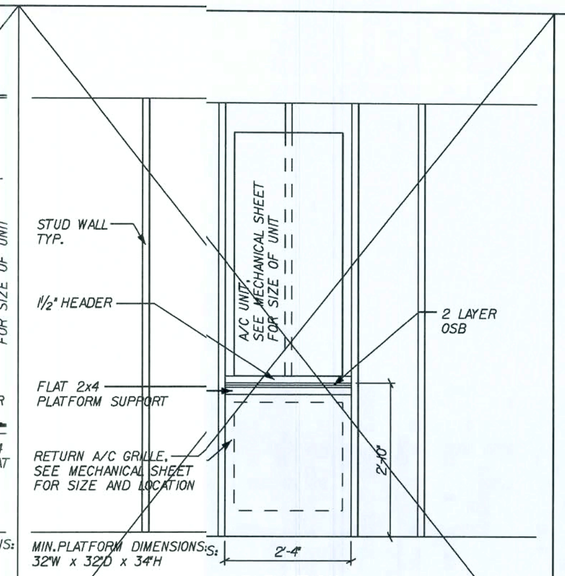

OPEN A/C PLATFORM

NOT USED

SCALE: 1/2" = 1'-0"

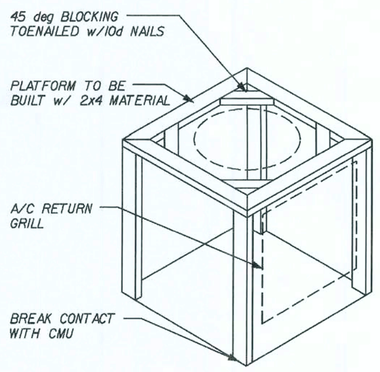

A/C PLATFORM FRAMING

REVISED 01-24-05

SCALE: 1/2" = 1'-0"

REVISIONS :

COPYRIGHT © 2005 MARONDA HOMES

Maronda Homes

(407) 321-0064 4005 MARONDA WAY SANFORD, FLORIDA

STANDARD PLATFORM DETAILS

SUNBURY-NEWBERRY

A/R-HEAT DETAILS

DRAWN BY:

GARAGE:

RELEASE DATE: 10-08-04

Maronda Systems
4005 Maronda Way
Sanford, FL 32771
(407)321-0064

Tomas Ponce P.E.
License No. 0050068

OCT 10 2007

SHEET:

SD-H

05

p:\Houses_05\sunbury\dtls\std_heating.sdh

14:41:48

PLOT DATE: 26 JUN 2007

FLORIDA BUILDING CODE 2004 : RESIDENTIAL

RG OPTIONAL WOOD RAILING AND SPINDELS IN LIEU OF 42" DRYWALL SLOPED WALL

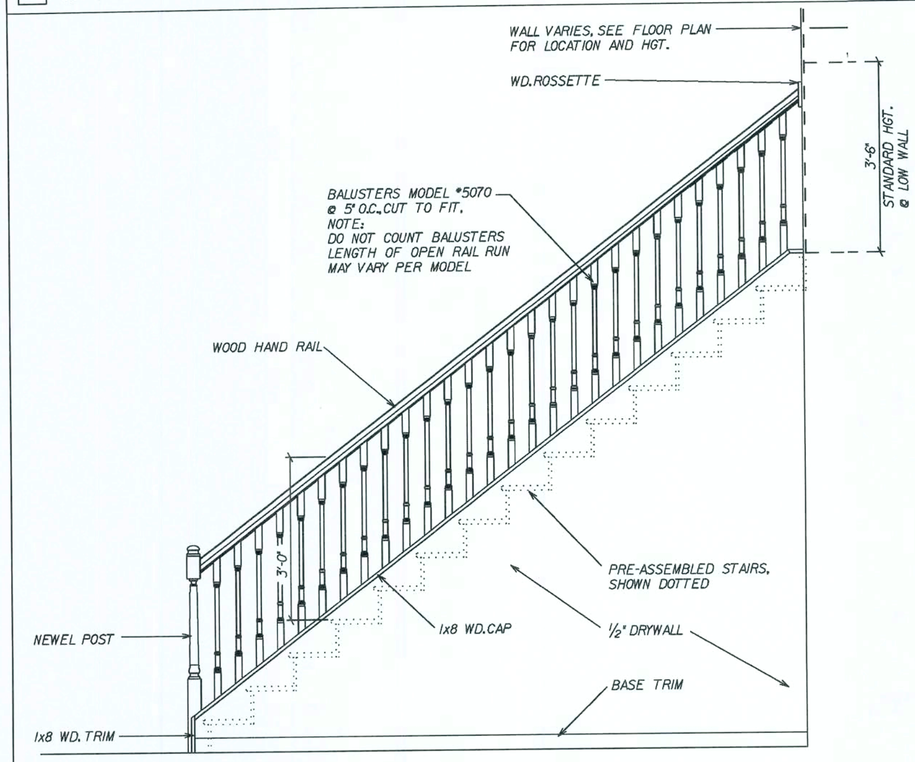

OPEN RAIL STAIR ELEVATION

SCALE: 1/2" = 1'-0"

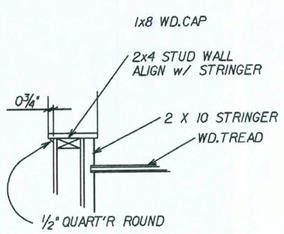

SECTION B

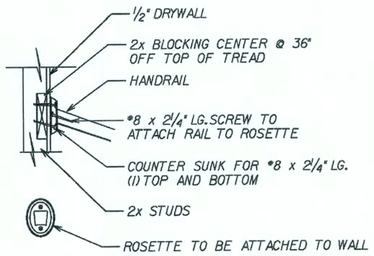

RAIL ATTACHMENT TO WALL

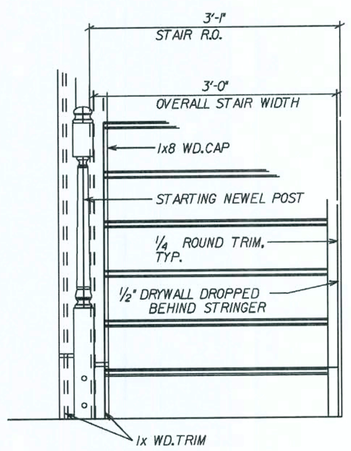

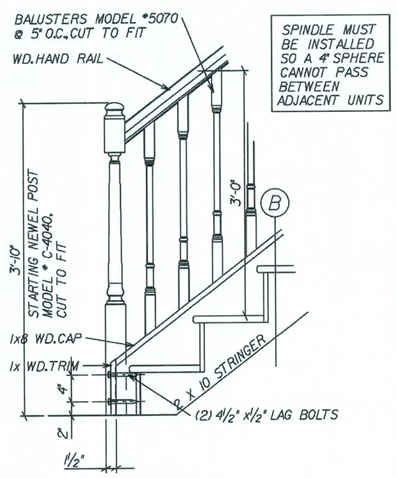

OPTIONAL OPEN RAIL STAIR DETAILS

REVISED 01-25-05

SCALE: 3/4" = 1'-0"

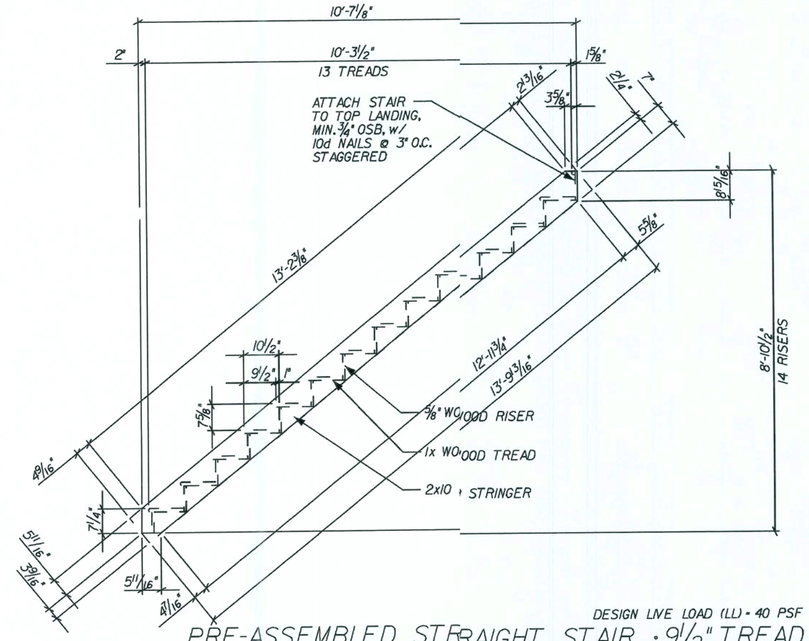

DESIGN LIVE LOAD (LL) = 40 PSF

PRE-ASSEMBLED STRAIGHT STAIR : 9 1/2" TREAD

REVISED 08-24-06 NAILING ATTACHMENT

SCALE: 3/8" = 1'-0"

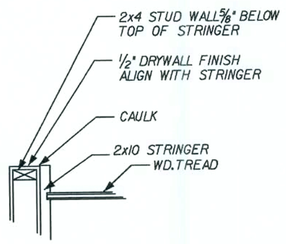

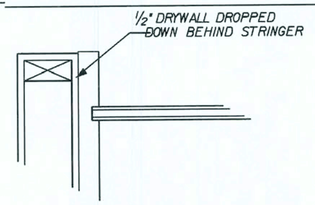

SECTION A

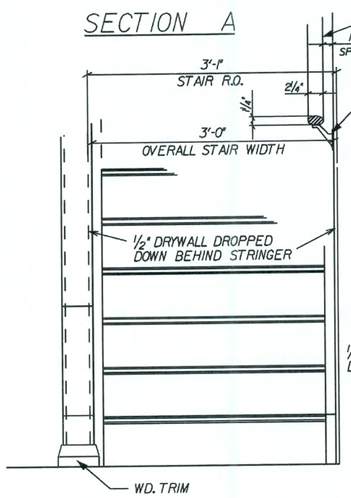

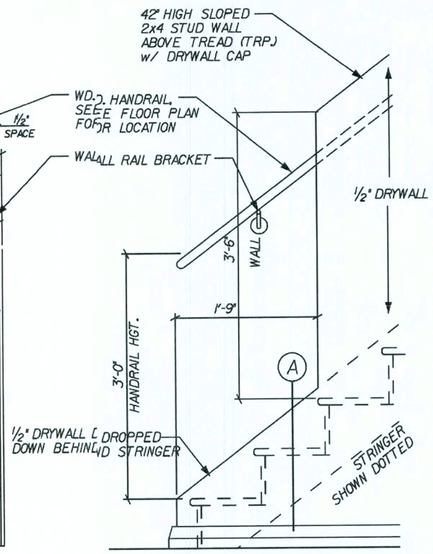

NOTE:
SECTION R311.5.6.2 HANDRAIL ENDS SHALL BE RETURNED TO WALL

REVISED 04-23-06
HANDRAIL NOTE

STANDARD STAIR w/ 42" HIGH WALL

SCALE: 3/4" = 1'-0"

REVISIONS :

01-16-06 STD. STAIR DETAIL w/ 21" STEP

COPYRIGHT © 2005 MARONDA HOMES

Maronda Homes

(407) 321-0064 4005 MARONDA WAY SANFORD, FLORIDA

05

p:\1\houses...05\sunbury\dtls\v4r-106_50.slt

9 1/4" FRM'G | 14 RISER : STRAIGHT

STAIR DETAILS

GARAGE:

DRAWN BY:

RELEASE DATE: 03 - 28 - 05

14-41-49

Maronda Systems
4005 Maronda Way
Sanford, FL 32771
(407)321-0064

Tomas Ponce P.E.
License No. 0050068

OCT 10 2007

SHEET:

STR

PLOT DATE: 26 JUN 2007

FLORIDA BUILDING CODE 2004 : RESIDENTIAL

DISTINCTION SERIES

SMC INSWING RESIDENTIAL INSULATED FIBERGLASS DOOR IN WOOD FRAME

GENERAL NOTES

1. THE FOLLOWING PRODUCT HAS BEEN EVALUATED FOR COMPLIANCE WITH THE WIND LOADS SPECIFIED IN SECTION 120 OF THE TEXAS DEPARTMENT OF INSURANCE WINDSTORM RESISTANT CONSTRUCTION GUIDE AND SECTION 103 OF THE TEXAS WINDSTORM INSURANCE ASSOCIATION BUILDING CODE FOR WINDSTORM RESISTANT CONSTRUCTION.
2. WOOD BUCKS BY OTHERS, MUST BE ANCHORED PROPERLY TO TRANSFER LOADS TO THE STRUCTURE.
3. PRODUCT ANCHORS SHALL BE AS LISTED AND SPACED AS SHOWN ON DETAILS. ANCHOR EMBEDMENT TO BASE MATERIAL SHALL BE BEYOND WALL DRESSING OR STUCCO.
4. PRODUCT DOES NOT MEET IMPACT RESISTANCE.
5. DESIGN PRESSURE RATING SHALL BE AS FOLLOWS:
   - FOR 6' 8" HIGH DOORS: SEE TABLE 1.
   - FOR FRAMES OVER 6' 8" UP TO 8' 0": SEE TABLE 2.

DISTINCTION SMC FIBERGLASS DOOR

DOOR LEAF CONSTRUCTION:

FACE SHEETS: EACH SLAB IS CONSTRUCTED FROM 0.060" THICK FIBERGLASS SKIN.

CORE DESIGN: THE INTERIOR CAVITY OF EACH DOOR IS FILLED WITH RIGID POLYURETHANE.

CONSTRUCTION: THE VERTICAL EDGES OF THE SLAB CONSIST OF GLUED INTERLOCKING FIBERGLASS JOINTS. THE HORIZONTAL EDGES CONSIST OF THE FIBERGLASS SKIN GLUED TO THE WOOD BLOCK AT TOP AND TO THE RIGID PVC FOAM INSERT AT BOTTOM.

TABLE OF CONTENTS

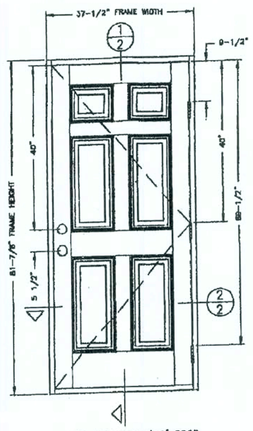

TYPICAL ELEVATION 6'-8" DOOR

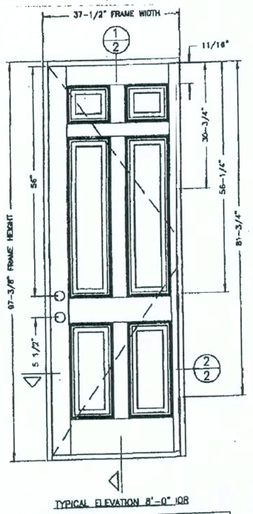

TYPICAL ELEVATION 8'-0" DOR

DESIGN PRESSURE RATING (TABLE #1)

	WHERE WATER INFILTRATION REQUIREMENT IS NEEDED	WHERE WATER INFILTRATION REQUIREMENT IS NOT NEEDED
POSITIVE	NOT APPROVED	+80 PSF
NEGATIVE	NOT APPROVED	-80 PSF

DESIGN PRESSURE RATING (TABLE #2)

	WHERE WATER INFILTRATION REQUIREMENT IS NEEDED	WHERE WATER INFILTRATION REQUIREMENT IS NOT NEEDED
POSITIVE	NOT APPROVED	0 PSF
NEGATIVE	NOT APPROVED	0 PSF

PLASTPRO, INC.
9 PEACH TREE HILL RD.
LIVINGSTON, NJ 07039

PRODUCT: DISTINCTION SERIES SMC INSWING FIBERGLASS PATIO DOOR
PART OF ASSEMBLY:
GENERAL NOTES AND ELEVATIONS

REVISIONS: NO. DATE BY

RW CONSULTING (813) 684-3831

DATE: 01/06/99
SCALE: N.T.S.
DWG. BY: R.P.P.
CHK. BY:
DRAWING NO.: 99-01
SHEET 1 OF 4

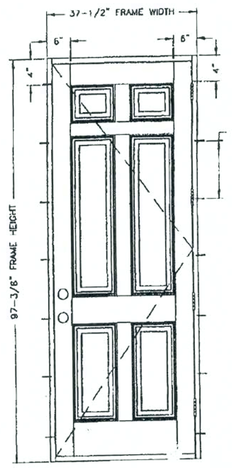

ANCHOR LAYOUT FOR 8'-0" DOOR

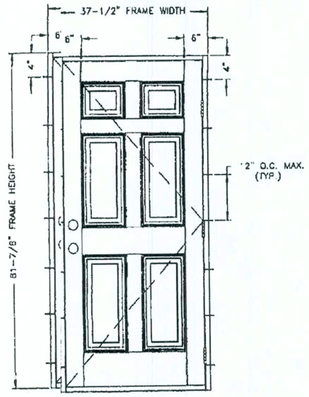

ANCHOR LAYOUT FOR 6'-8" DOOR

TYPICAL ANCHORS
1.) INTO 2BY WOOD BUCKS OR WOOD STRUCTURE
#8 PFH Wd. Screw, 1" MIN. EMBEDMENT
2.) INTO 1BY WOOD BUCKS OR INTO MASONRY
3/16" DIA. TAPCONS WITH 1-1/4" MIN. EMBEDMENT

PLASTPRO, INC.
9 PEACH TREE HILL RD.
LIVINGSTON, NJ 07039

PRODUCT: DISTINCTION SERIES SMC INSWING FIBERGLASS PATIO DOOR
PART OF ASSEMBLY:
ANCHORING LAYOUT

REVISIONS: NO. DATE BY

RW CONSULTING (813) 684-3831

DATE: 01/06/99
SCALE: N.T.S.
DWG. BY: R.P.P.
CHK. BY:
DRAWING NO.: 99-01
SHEET 3 OF 4

REVISIONS:

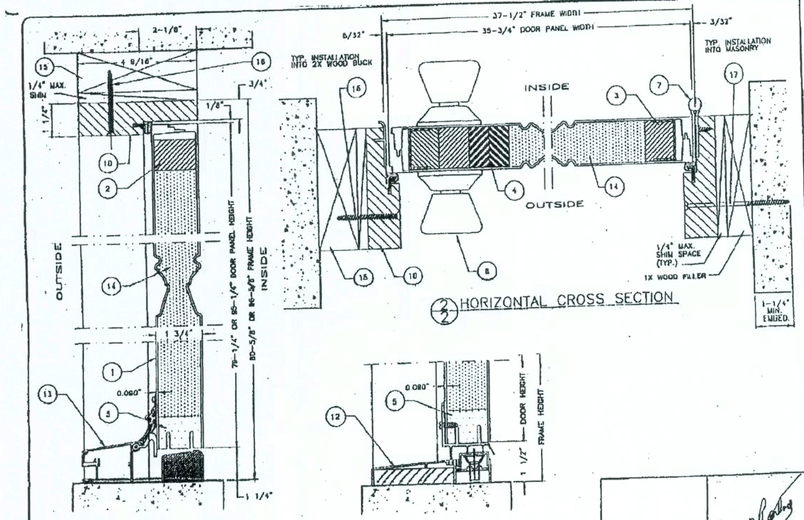

HORIZONTAL CROSS SECTION

VERTICAL CROSS SECTION

OPTIONAL THRESHOLD

NOTE:
WHEN REQ. THE USE OF 2X SHALL BE ALLOWED USING (4) EVENLY SPACED 1/4" X 3" TAPCONS IN THE SIDES, AND (2) EVENLY SPACED 1/4" X 3" TAPCONS IN THE HEADER ALL W/ 1 1/4" IMBEDMENT. IF NEEDED A 1X CAN BE NAILED 6" O.C. STAGGERED TO 2X. DOOR IS THEN ATTACHED PER DETAILS ON THIS PAGE.

FINAL ANCHORING OF A WOOD FRAME UP TO 5'4 X 6'8
SINGLE INSWING UNIT W/WO SIDELITES
PRODUCT ACCEPTANCE No.: DSI222

SCREW SCHEDULE

1	#10 X 5/8"	PHILLIPS FLAT HEAD
2	#10 X 1 3/4"	PHILLIPS FLAT HEAD
3	#10 X 2"	PHILLIPS FLAT HEAD
4	#10 X 3"	PHILLIPS FLAT HEAD

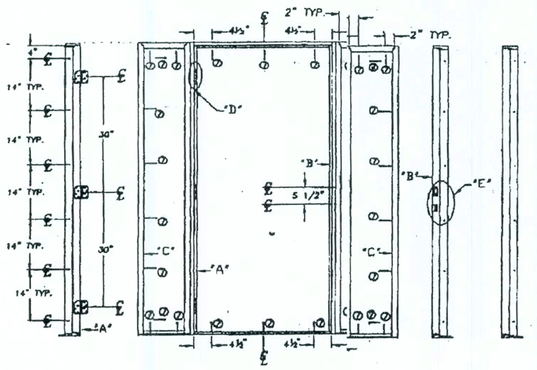

Product Acceptance No: DSI-222

Size: up to 5'4 x 6'8	Inswing (wood jamb) 2'0	2'4	2'6	Configuration: X, OXO, XO, OX 2'6	2'8	3'0
Single Opaque W/Sidelites	+80 -80	+80 -80	+80 - -80	+80 -80		+80 -80
Single Glazed W/Sidelites (Door does not meet Missile Impact)	+75 -80	+64 -77	+60 - -71	+60 -60		+60 -60
				+56 -67		+50 -60
				+50 -60		+50 -60

Test # 210-1987, 210-2024 Mfg. by: Nan Ya Plastics / Plastpro Livingston, NJ 07039

ITEM	DESCRIPTION	PART No.	MATERIAL
1	DOOR SKIN (6 PANEL 6'-8")	SKD 82	SMC .060" THK. FIBERGLASS
	DOOR SKIN (6 PANEL 8'-0")	SKD 84	SMC .060" THK. FIBERGLASS
2	TOP RAIL (6'-8")	WCA 30	WOOD (MAHOGANY)
	TOP RAIL (8'-0")	WCA 30	WOOD (MAHOGANY)
3	HINGE STILE	RH 422	STEEL (SS 11)
		WCA 30 (TWO PCS.)	WOOD (MAHOGANY)
4	LOCK STILE	RH 422	STEEL (SS 11)
		WCA 30 (TWO PCS.)	WOOD (MAHOGANY)
5	BOTTOM RAIL	PVE 73	FOAM PVC EXTRUSION
		HAS 01	PVC
6	DOOR BOTTOM (INSWING)	SK 250 (ENDURA)	PVC CO-EXTRUSION
		BENCHMARK ADJ. DOOR SWEEP	PVC CO-EXTRUSION
		DOOR SWEEP	ALUMINUM / PVC
			BRASS
7	BUTT HINGE	4 1/2	
8	LATCH LOCK	KWIKSET 200 SERIES	
9	DEAD BOLT	KWIKSET 660 SERIES	
10	DOOR FRAME	4-5/8" WOOD FRAME	FINGER JOINTED WHITE PINE
		208 ESA WOOD CENTERSTOP	SCHLAGEL C-LON
12	THRESHOLD (INSWING)	208 ESA WOOD CENTERSTOP	ALUMINUM / WOOD
		208 ESA WOOD CENTERSTOP	SCHLAGEL C-LON
13	THRESHOLD (INSWING)	208 ESA	ALUMINUM / WOOD
		208 ESA	SCHLAGEL C-LON
		208 ESA WEEP	ALUMINUM / PVC
14	FOAM CORE		PVC URETHANE FOAM CORE
15	2X		WOOD BLOCK
16	ANCHOR	#8X8-1/2" PFH Wd. Screw	STEEL
17	ANCHOR	5/16" X FH TAPCON	STEEL

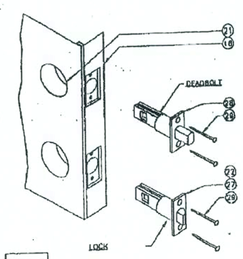

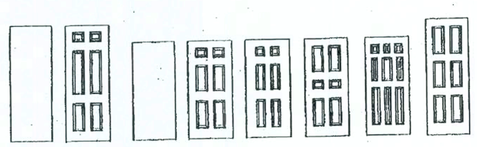

DOOR MODELS

PLASTPRO, INC.
9 PEACH TREE HILL RD.

PRODUCT: DISTINCTION SERIES SMC INSWING FIBERGLASS PATIO DOOR
PART OF ASSEMBLY:
PARTS LIST

REVISIONS: NO. DATE BY

RW CONSULTING (813) 684-3831

DATE: 01/06/99
SCALE: N.T.S.
DWG. BY: R.P.P.
CHK. BY:
DRAWING NO.: 99-01
SHEET 4 OF 4

REVISIONS:

COPYRIGHT © 2002 MARONDA HOMES

Maronda Homes

4005 MARONDA WAY SANFORD, FLORIDA (407) 321-0064

EXT. DOOR DETAILS IN SWING-FIBERGLASS

RELEASE DATE: 05 JUN 2003

SHEET: FD1

DISTINCTION SERIES

SMC OUTSWING RESIDENTIAL INSULATED FIBERGLASS DOOR IN WOOD FRAME

GENERAL NOTES

1. THIS PRODUCT IS DESIGNED TO MEET THE SOUTH FLORIDA BUILDING CODE 1994 EDITION FOR MIAMI-DADE COUNTY.
2. WOOD BUCKS BY OTHERS, MUST BE ANCHORED PROPERLY TO TRANSFER LOADS TO THE STRUCTURE.
3. PRODUCT ANCHORS SHALL BE AS LISTED AND SPACED AS SHOWN ON DETAILS. ANCHOR EMBEDMENT TO BASE MATERIAL SHALL BE BEYOND WALL DRESSING OR STUCCO.
4. IMPACT RESISTANT SHUTTERS NOT REQUIRED
5. DESIGN PRESSURE RATING SHALL BE AS FOLLOWS:
   - FOR 6' 8" HIGH DOORS: SEE TABLE 1.
   - FOR FRAMES OVER 6' 8" UP TO 8' 0": SEE TABLE 2.

DISTINCTION SMC FIBERGLASS DOOR

DOOR LEAF CONSTRUCTION:

FACE SHEETS: EACH SLAB IS CONSTRUCTED FROM 0.090" THICK FIBERGLASS SKIN.

CORE DESIGN: THE INTERIOR CAVITY OF EACH DOOR IS FILLED WITH RIGID POLYURETHANE.

CONSTRUCTION: THE VERTICAL EDGES OF THE SLAB CONSIST OF GLUED INTERLOCKING FIBERGLASS JOINTS.THE HORIZONTAL EDGES CONSIST OF THE FIBERGLASS SKIN GLUED TO THE WOOD BLOCK AT TOP AND TO THE RIGID PVC FOAM INSERT AT BOTTOM.

TABLE OF CONTENTS

SHEET #	DESCRIPTION
1	GENERAL NOTES, TYPICAL ELEVATIONS
2	CROSS SECTIONS (VERTICAL AND HORIZONTAL)
3	ANCHORING LAYOUT
4	PART LIST

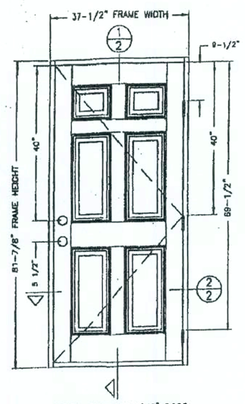

TYPICAL ELEVATION 6'-8" DOOR

DESIGN PRESSURE RATING (TABLE #1)		
	WHERE WATER INFILTRATION REQUIREMENT IS NEEDED	WHERE WATER INFILTRATION REQUIREMENT IS NOT NEEDED
POSITIVE	+50 PSF	+60 PSF
NEGATIVE	-60 PSF	-80 PSF

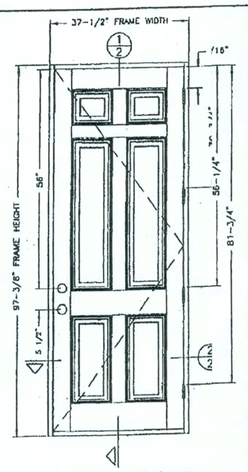

TYPICAL ELEVATION 8'-0" DOOR

DESIGN PRESSURE RATING (TABLE #2)		
	WHERE WATER INFILTRATION REQUIREMENT IS NEEDED	WHERE WATER INFILTRATION REQUIREMENT IS NOT NEEDED
POSITIVE	+50 PSF	+50 PSF
NEGATIVE	-60 PSF	-50 PSF

PLASTPRO, INC.
9 PEACH TREE HILL RD.
LAWNSTON, NJ 07039

PRODUCT: DISTINCTION SERIES SMC OUTSWING FIBERGLASS PATIO DOOR
PART OR ASSEMBLY: PARTS LIST AND ELEVATIONS

NO.	DATE	REVISIONS	BY

RW CONSULTING (813) 684-3831

DATE: 01/06/99
SCALE: N.T.S.
DWG. BY: R.P.P.
CHK. BY:
DRAWING NO.: 99-02
SHEET 1 OF 4

DISTINCTION SERIES

SMC OUTSWING RESIDENTIAL INSULATED FIBERGLASS DOOR IN WOOD FRAME (STEEL REINFORCED WITH FULL GLASS LITE)

GENERAL NOTES

1. THIS PRODUCT IS DESIGNED TO MEET THE SOUTH FLORIDA BUILDING CODE 1994 EDITION FOR MIAMI-DADE COUNTY.
2. WOOD BUCKS BY OTHERS, MUST BE ANCHORED PROPERLY TO TRANSFER LOADS TO THE STRUCTURE.
3. PRODUCT ANCHORS SHALL BE AS LISTED AND SPACED AS SHOWN ON DETAILS. ANCHOR EMBEDMENT TO BASE MATERIAL SHALL BE BEYOND WALL DRESSING OR STUCCO.
4. IMPACT RESISTANT SHUTTERS ARE REQUIRED
5. DESIGN PRESSURE RATING SHALL BE AS FOLLOWS:
   - FOR 6' 8" HIGH DOORS: SEE TABLE 1.
   - FOR FRAMES OVER 6' 8" UP TO 8' 0": SEE TABLE 2.

DOOR LEAF CONSTRUCTION:

1. FACE SHEETS: EACH SLAB IS CONSTRUCTED FROM 0.075 THK. FIBERGLASS SKIN.
2. CORE DESIGN: THE INTERIOR CAVITY OF EACH DOOR IS FILLED WITH RIGID POLYURETHANE.
3. CONSTRUCTION: THE VERTICAL EDGES OF THE SLAB CONSIST OF GLUED INTERLOCKING FIBERGLASS JOINTS THE HORIZONTAL EDGES CONSIST OF THE FIBERGLASS SKIN, GLUED TO THE WOOD BUCK AT TOP AND TO THE RIGID PVC FOAM INSERT AT BOTTOM
4. GLAZING: 5/8" OVERALL THICKNESS INSULATED GLASS PANEL CONSISTING OF: TWO 1/8" TEMPERED LITES AND ONE AIR SPACE
5. REINFORCING: ONE (1) "U" SHAPED STEEL REINFORCING CHANNEL MEASURING 1.591"x0.748"x0.079" THK. WAS LOCATED AT EACH PANEL STILE. (8'-0" DOOR ONLY)

TABLE OF CONTENTS

SHEET #	DESCRIPTION
1	GENERAL NOTES, TYPICAL ELEVATIONS
2	CROSS SECTIONS (VERTICAL AND HORIZONTAL)
3	ANCHORING LAYOUT
4	PART LIST

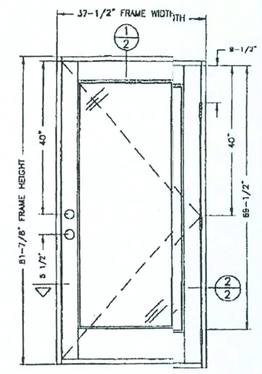

TYPICAL ELEVATION 6'-8" DOOR

DESIGN PRESSURE RATING (TABLE #1)		
	WHERE WATER INFILTRATION REQUIREMENT IS NEEDED	WHERE WATER INFILTRATION REQUIREMENT IS NOT NEEDED
POSITIVE	+60 PSF	+60 PSF
NEGATIVE	-80 PSF	-80 PSF

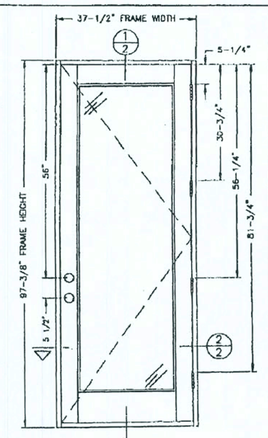

TYPICAL ELEVATION 8'-0" DOOR

DESIGN PRESSURE RATING (TABLE #2)		
	WHERE WATER INFILTRATION REQUIREMENT IS NEEDED	WHERE WATER INFILTRATION REQUIREMENT IS NOT NEEDED
POSITIVE	+60 PSF	+70 PSF
NEGATIVE	-70 PSF	-70 PSF

PLASTPRO, INC.
9 PEACH TREE HILL RD.
LAWNSTON, NJ 07039

PRODUCT: DISTINCTION SERIES SMC OUTSWING FIBERGLASS GLAZED PATIO DOOR
PART OR ASSEMBLY: PARTS LIST AND ELEVATIONS

NO.	DATE	REVISIONS	BY

RW CONSULTING (813) 684-3831

DATE: 02/09/99
SCALE: 3/4"=12"
DWG. BY: R.P.P.
CHK. BY:
DRAWING NO.: 99-05
SHEET 1 OF 4

REVISIONS :

COPYRIGHT © 2002 MARONDA HOMES

Maronda Homes

4005 MARONDA WAY SANFORD, FLORIDA (407) 321-0064

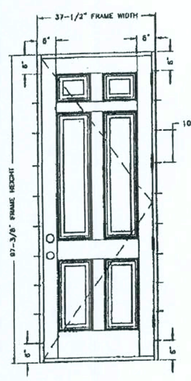

ANCHOR LAYOUT FOR 6'-8" DOOR

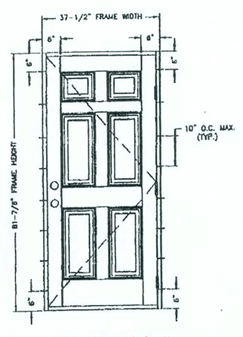

ANCHOR LAYOUT FOR 6'-8" DOOR

TYPICAL ANCHORS
1.) INTO 2BY WOOD BUCKS OR WOOD STRUCTURE #8 SMS, 1-1/2" MIN. EMBEDMENT
2.) INTO 1BY WOOD BUCKS OR INTO MASONRY 3/16" DIA. TAPCONS WITH 1-1/4" MIN. EMBEDMENT

PLASTPRO, INC.
9 PEACH TREE HILL RD.
LAWNSTON, NJ 07039

PRODUCT: DISTINCTION SERIES SMC OUTSWING FIBERGLASS PATIO DOOR
PART OR ASSEMBLY: ANCHORING LAYOUT

NO.	DATE	REVISIONS	BY

RW CONSULTING (813) 684-3831

DATE: 01/06/99
SCALE: N.T.S.
DWG. BY: R.P.P.
CHK. BY:
DRAWING NO.: 99-02
SHEET 3 OF 4

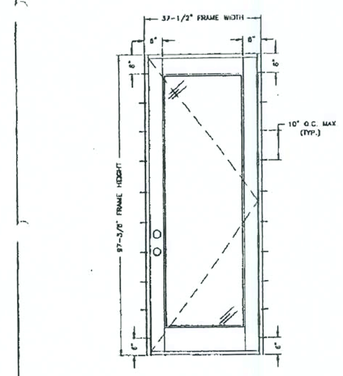

ANCHOR LAYOUT FOR 8'-0" DOOR

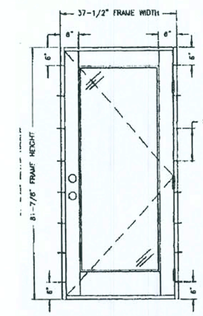

ANCHOR LAYOUT FOR 8'-8" DOOR

TYPICAL ANCHORS
1.) INTO 2BY WOOD BUCKS OR WOOD STRUCTURE #8 SMS, 1-1/2" MIN. EMBEDMENT
2.) TYPICAL 1BY WOOD BUCKS AND INTO MASONRY 3/16" DIA. TAPCONS WITH 1-1/4" MIN. EMBEDMENT

PLASTPRO, INC.
9 PEACH TREE HILL RD.
LAWNSTON, NJ 07039

PRODUCT: DISTINCTION SERIES SMC OUTSWING FIBERGLASS GLAZED PATIO DOOR
PART OR ASSEMBLY: ANCHORING LAYOUT

NO.	DATE	REVISIONS	BY

RW CONSULTING (813) 684-3831

DATE: 02/09/99
SCALE: N.T.S.
DWG. BY: R.P.P.
CHK. BY:
DRAWING NO.: 99-05
SHEET 3 OF 4

EXT. DOOR DETAILS

OUT SWING-FIBERGLASS

RELEASE DATE:

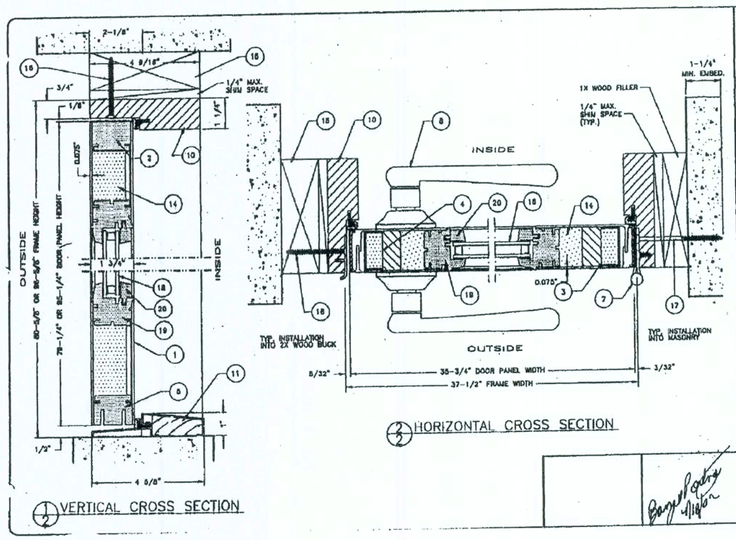

2/2 HORIZONTAL CROSS SECTION

2/2 VERTICAL CROSS SECTION

PLASTPRO, INC.
9 PEACH TREE HILL RD.
LAWNSTON, NJ 07039

PRODUCT: DISTINCTION SERIES SMC OUTSWING FIBERGLASS PATIO DOOR
PART OR ASSEMBLY: VERTICAL & HORIZONTAL CROSS SECTIONS

NO.	DATE	REVISIONS	BY

RW CONSULTING (813) 684-3831

DATE: 02/09/99
SCALE: N.T.S.
DWG. BY: R.P.P.
CHK. BY:
DRAWING NO.: 99-03
SHEET 2 OF 4

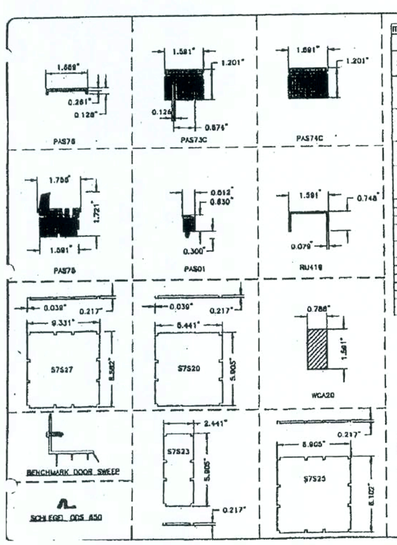

ITEM	DESCRIPTION	PART No.	MATERIAL
1	DOOR SKIN (6 PANEL 8'-0") DOOR SKIN (6 PANEL 8'-0")	==== ====	SMC DMC THK FIBERGLASS SMC DMC THK FIBERGLASS
2	TOP RAIL	PAS74C TOP RAIL 57523 ANCHOR (6'-0") 57525 ANCHOR (8'-0")	PVC FOAM STEEL STEEL
3	HINGE STILE	PAS78 DOOR EXTENSION WCA30(WD PCS)(6'-8" ONLY) WOOD (8'-0" ONLY) RU 418 (8'-0" ONLY)	WOOD, PVC WOOD (MAHOGANY) WOOD (MAHOGANY) STEEL (SS 41)
4	LOCK STILE	PAS78 DOOR EXTENSION WCA30(WD PCS)(6'-8" ONLY) WOOD (8'-0" ONLY) RU 418 (8'-0" ONLY)	WOOD, PVC WOOD (MAHOGANY) WOOD (MAHOGANY) STEEL (SS 41)
5	BOTTOM RAIL	PAS73C BOTTOM RAIL 57520 ANCHOR (6'-0") 57523 ANCHOR (8'-0")	PVC FOAM STEEL STEEL
6	DOOR BOTTOM (INSWING)	PAS75 THRESHOLD DDS 650 WEATHERSTRIP BENCHMARK ADJ. DOOR SWEEP	PVC CO-EXTRUSION PVC CO-EXTRUSION ALUMINUM / PVC
7	BUTT HINGE	4" x 4"	BRASS
8	LATCH LOCK	KWIKSET 200 SERIES	
9	DEAD BOLT	KWIKSET 660 SERIES 1-3/16" WOOD FRAME	WOOD
10	DOOR FRAME	DDS 850 WEATHERSTRIP	SCHLEGEL D-LON
11	THRESHOLD (OUTSWING)	DDS 850 WEATHERSTRIP OUTSWING BUMPER	SCHLEGEL D-LON ALUMINUM / WOOD
12	FOAM CORE		POLYURETHANE FOAM CORE
13	2X		WOOD BLOCK
14	ANCHOR	#8 X 2-1/2" PAN SUB	STEEL
15	ANCHOR	3/16"	TAPCON
16	5/8" INSULATED GLASS, CONSISTING OF: (2) LITES OF 1/8"		TEMP GLASS + AIR SPACE
17	INTERNAL FRAME	PAS01	PVC FOAM
18	GLAZING BEAD	PAS01	PVC FOAM

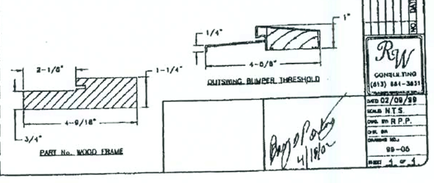

PLASTPRO, INC.
9 PEACH TREE HILL RD.
LAWNSTON, NJ 07039

PRODUCT: DISTINCTION SERIES SMC OUTSWING FIBERGLASS PATIO DOOR
PART OR ASSEMBLY: PARTS LIST

NO.	DATE	REVISIONS	BY

RW CONSULTING (813) 684-3831

DATE: 02/09/99
SCALE: N.T.S.
DWG. BY: R.P.P.
CHK. BY:
DRAWING NO.: 99-06
SHEET 4 OF 4

ITEM	DESCRIPTION	PART No.	MATERIAL
1	DOOR SKIN (6 PANEL 8'-0") DOOR SKIN (6 PANEL 8'-0")	SMC DMC THK FIBERGLASS SMC DMC THK FIBERGLASS	
2	TOP RAIL (6'-8") TOP RAIL (8'-0")	WCA 20 WCA 30	WOOD (MAHOGANY) WOOD (MAHOGANY)
3	HINGE STILE	WCA 30 RU 422	WOOD (MAHOGANY) STEEL (SS 41)
4	LOCK STILE	WCA 30(TWO PCS) RU 422	WOOD (MAHOGANY) STEEL (SS 41)
5	BOTTOM RAIL	WCA 30(TWO PCS) PAS 73	WOOD (MAHOGANY) CAGE PVC EXTRUSION
7	BUTT HINGE	M35 01	PVC
8	LATCH LOCK	4" x 4"	BRASS
9	DEAD BOLT	KWIKSET 200 SERIES KWIKSET 660 SERIES	
10	DOOR FRAME	1-2/16" WOOD FRAME	WOOD
11	THRESHOLD (OUTSWING)	DDS 850 WEATHERSTRIP OUTSWING BUMPER	SCHLEGEL D-LON ALUMINUM / WOOD
12	FOAM CORE	DDS 850 WEATHERSTRIP	SCHLEGEL D-LON POLYURETHANE FOAM CORE
13	2X		WOOD BLOCK
14	ANCHOR	#8 X 2-1/2" PAN SUB	STEEL
15	ANCHOR	3/16" X	TAPCON STEEL

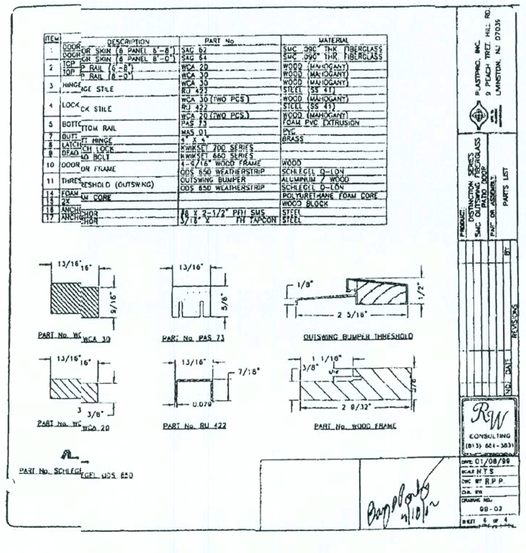

PLASTPRO, INC.
9 PEACH TREE HILL RD.
LAWNSTON, NJ 07039

PRODUCT: DISTINCTION SERIES SMC OUTSWING FIBERGLASS PATIO DOOR
PART OR ASSEMBLY: PARTS LIST

NO.	DATE	REVISIONS	BY

RW CONSULTING (813) 684-3831

DATE: 01/08/99
SCALE: N.T.S.
DWG. BY: R.P.P.
CHK. BY:
DRAWING NO.: 99-03
SHEET 4 OF 4

D:\Tbc2000\the bucks\0\b24-panel\c.dgn

03 JAN 2003 0603555

SHEET:

FD 2

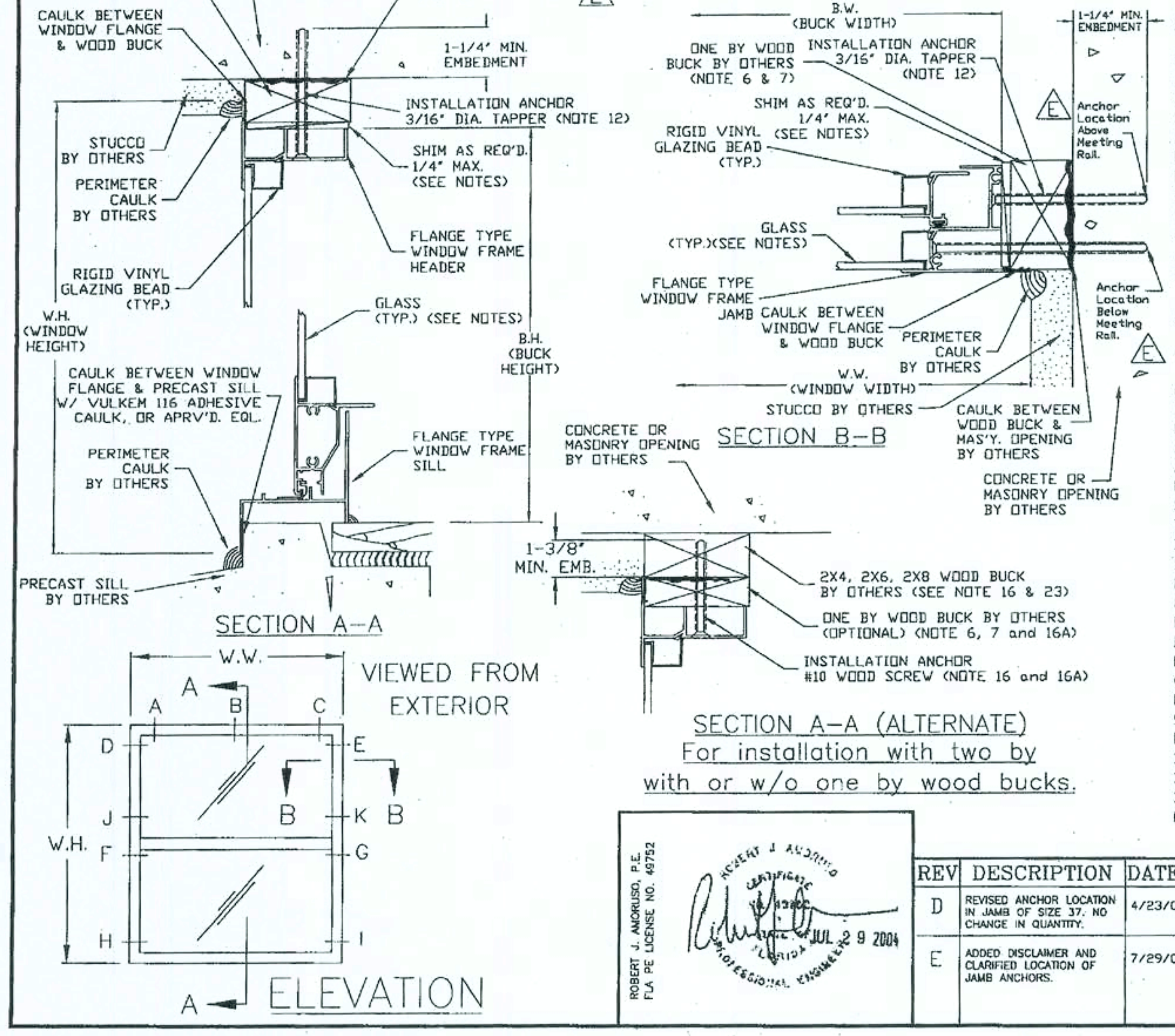

Disclaimer: The purpose of this installation drawing is to present the manufacturer's recommendations for anchorage (i.e., concrete screws, wood screws, nails and Vulkem structural adhesive) to achieve the design pressure specified on the fenestration product as required by Florida Building Code, Section 1707.4.4, Anchorage Methods. Recommendations regarding flashing, sealing, sealants or other joint sealant practices does not constitute a warranty either expressed or implied.

ROBERT J. AMORUSO, P.E.
FLA PE LICENSE NO. 48752
JUL 2 9 2004

IMPOIANT INFORMATION & GENERAL NOTES

These n:s are provided to ensure proper installation of Florida Extruders Milestone productnd must be followed fully.

GENERANSTALLATION INSTRUCTIONS

1) SHIM; REQ'D. AT EACH INSTALLATION ANCHOR WITH LOAD BEARING SHIM. MAX. ALLOW/E SHIM STACK TO BE 1/4".
2) USE ICONIZED ACRYLIC CAULK BEHIND WINDOW FLANGE AT HEAD & JAMBS. SILL MU BE ATTACHED TO THE SUBSTRATE WITH VULKEM 116 ADHESIVE CAULK OR APPROV EQUAL. APPLICATION OF VULKEM 116 ADHESIVE CAULK OR APPROVED EQUAL /FRAME SILL MUST COMPLY WITH SEALANT MANUFACTURER'S RECOMNDATIONS.
3) USE ICONIZED ACRYLIC CAULK FOR PERIMETER SEAL AROUND EXTERIOR OF WINDOFLANGE AND TO SEAL HEADS OF INSTALLATION FASTENERS.
4) FLORA EXTRUDERS 1000 SERIES SINGLE HUNG IS SHOWN. THIS PRINT ALSO APPLIED THE FLORIDA EXTRUDERS 1500 AND 2000 SERIES SINGLE HUNGS.
5) WINDV FRAME MATERIAL: ALUMINUM ALLOY 6063.

ANCHONSTALLATION INSTRUCTIONS

GENER:

6) NAIL TACHMENT OF NON-STRUCTURAL ONE BY BUCK IS 4" FROM EACH CORNER AND 8" CENTER. USE A HARDENED "T-NAIL" WITH A 0.097" DIAMETER AND 1 3/8" LENGTH/8" EMBEDMENT), A HARDENED "MASONRY NAIL" WITH A 0.148" DIAMETER AND 1 1' LENGTH (3/4" EMBEDMENT) OR EQUIVALENT. FOR ALTERNATE SECTION A-A/B-BSE A 0.113" DIAMETER COMMON WIRE NAIL WITH A 3/4" EMBEDMENT OR EQUIVANT FOR NAILING NON-STRUCTURAL ONE BY BUCK INTO A TWO BY STRUCTAL BUCK.
7) APPLI TO ALL NON-STRUCTURAL BUCKS LESS THAN 1 1/2" THICKNESS. NOT INTEND TO LIMIT TO NOMINAL ONE BY WOOD BUCK ONLY. BUCKS GREATER THAN 1" NOMIL (3/4" THICK) AND LESS THAN 2" NOMINAL (1 1/2" THICK) WILL REQUIRE NAIL LEITH SUFFICIENT TO MEET EMBEDMENT REQUIREMENTS OF NOTE 6.
8) ALL IFALLATION ANCHORS MUST BE MADE OF CORROSION RESISTANT MATERIS OR HAVE A CORROSION RESISTANT COATING APPLIED SUITABLE FOR THE ENVIROIENT AND/OR FRAMING MATERIAL. WHERE ANCHORS ARE USED IN PRESSUIPRESERVATIVE TREATED WOOD, THE WOOD SUPPLIER SHALL BE CONSULD FOR RECOMMENDATION OF ANCHORS COMPATIBLE WITH THE PRESSUIPRESERVATIVE TREATMENT PROCESS USED.
9) ALL F.D SUPPLIED HOLES IN THE FRAME (IF REQUIRED) WILL BE 3/16" IN DIAMETI
10) WOCSCREWS SHALL MEET ANSI B18.6.1 DIMENSIONAL REQUIREMENTS.
11) IF VOD TENDS TO SPLIT, PRE-BORE HOLES AS FOLLOWS: #8 WOOD SCREW - 1/8" DIAILOT HOLE & #10 WOOD SCREW - 9/64" DIA. PILOT HOLE (NATIONAL DESIGN ECIFICATION FOR WOOD CONSTRUCTION).

[SEE SHEET 2 FOR CONTINUATION OF NOTES]

REV	DESCRIPTION	DATE	INI
D	REVISED ANCHOR LOCATION IN JAMB OF SIZE 37. NO CHANGE IN QUANTITY.	4/23/04	RJA
E	ADDED DISCLAIMER AND CLARIFIED LOCATION OF JAMB ANCHORS.	7/29/04	RJA

FLORIDA EXTRUDERS INTERNATIONAL, INC.
2540 JEWETT LANE
SANFORD, FLORIDA
CERTIFICATE OF AUTHORIZATION NO. 9235
TITLE: INSTALLATION DETAIL
SGL. HUNG FLANGE WINDOWS - SERIES 1000, 1500 & 2000
DRAWN BY: BB
APPROVED BY: RJA
DATE: 7/29/04
SCALE: NTS
DWG.: FLEX0016, SHT 1 OF 2

CALL SIZE	BUCK SIZE	LOCATIONS IN HEAD 30PSF TO 40PSF	LOCATIONS IN HEAD 41PSF TO 70PSF	LOCATIONS IN JAMB 30PSF TO 40PSF	LOCATIONS IN JAMB 41PSF TO 70PSF
12	18 1/8 X 25	B	B	F,G	F,G
13	18 1/8 X 37 3/8	B	B	F,G	F,G
14	18 1/8 X 49 5/8	B	B	F,G	F,G
145	18 1/8 X 55 1/4	B	B	F,G	F,G
15	18 1/8 X 62	B	B	F,G	F,G
16	18 1/8 X 71	B	B	F,G	F,G,H,I
17	18 1/8 X 83	B	B	F,G	F,G,J,K
1H2	25 1/2 X 25	B	B	F,G	F,G
1H3	25 1/2 X 37 3/8	B	B	F,G	F,G
1H4	25 1/2 X 49 5/8	B	B	F,G	F,G,H,I
1H45	25 1/2 X 55 1/4	B	B	F,G	F,G,H,I
1H5	25 1/2 X 62	B	B	F,G	F,G,H,I
1H6	25 1/2 X 71	B	B	F,G	F,G,H,I
1H7	25 1/2 X 83	B	B	F,G,J,K	F,G,J,K
30 1/2 X 26	29 1/2 X 25	B	B	F,G	F,G
30 1/2 X 38 3/8	29 1/2 X 37 3/8	B	B	F,G	F,G
30 1/2 X 50 5/8	29 1/2 X 49 5/8	B	B	F,G	F,G,H,I
30 1/2 X 56 1/4	29 1/2 X 55 1/4	B	B	F,G	F,G,H,I
30 1/2 X 63	29 1/2 X 62	B	B	F,G	F,G,H,I
30 1/2 X 72	29 1/2 X 71	B	B	F,G,H,I	F,G,H,I
30 1/2 X 84	29 1/2 X 83	B	B	F,G,J,K	F,G,J,K
22	36 x 25	B	B	F,G	F,G
23	36 x 37 3/8	B	B	F,G	F,G
24	36 x 49 5/8	B	B	F,G	F,G,H,I
245	36 x 55 1/4	B	B	F,G	F,G,H,I
25	36 x 62	B	B	F,G,H,I	F,G,H,I
26	36 x 71	B	B	F,G,H,I	D,E,F,G,H,I
27	36 x 83	B	B	F,G,J,K	F,G,H,I,J,K
42 x 26	41 x 25	B	B	F,G	F,G
42 x 38 3/8	41 x 37 3/8	B	B	F,G	F,G,H,I
42 x 50 5/8	41 x 49 5/8	B	B	F,G	F,G,H,I
42 x 56 1/4	41 x 55 1/4	B	B	F,G,H,I	F,G,H,I
42 x 63	41 x 62	B	B	F,G,H,I	D,E,F,G,H,I
42 x 72	41 x 71	B	B	F,G,H,I	D,E,F,G,H,I
42 x 84	41 x 83	B	B	F,G,J,K	F,G,H,I,J,K
48 x 26	47 x 25	B	A,C	F,G	F,G
48 x 38 3/8	47 x 37 3/8	B	A,C	F,G	F,G,H,I
48 x 50 5/8	47 x 49 5/8	B	A,C	F,G	F,G,H,I
48 x 56 1/4	47 x 55 1/4	B	A,C	F,G,H,I	F,G,H,I
48 x 63	47 x 62	B	A,C	F,G,H,I	D,E,F,G,H,I
48 x 72	47 x 71	B	A,C	F,G,H,I	D,E,F,G,H,I
48 x 84	47 x 83	B	A,C	F,G,J,K	D,E,F,G,H,I,J,K
32	52 1/8 X 25	B	A,C	F,G	F,G
33	52 1/8 X 37 3/8	B	A,C	F,G	F,G,H,I
34	52 1/8 X 49 5/8	B	A,C	F,G,H,I	F,G,H,I
345	52 1/8 X 55 1/4	B	A,C	F,G,H,I	D,E,F,G,H,I
35	52 1/8 X 62	B	A,C	F,G,H,I	D,E,F,G,H,I
36	52 1/8 X 71	B	A,C	F,G,H,I	D,E,F,G,H,I
* 37	52 1/8 X 83	B	A,C	F,G,J,K	D,E,F,G,H,I,J,K

TAPPER LOCATION CHART

* 37 SIZE NOT AVAILABLE IN 1000 OR 1500 SERIES.

IMPORTANT INFORMATION & GENERAL NOTES (cont.)

ANCHOR INSTALLATION INSTRUCTIONS (cont.)

3/16" DIA. TAPPER CONCRETE SCREW (WITH NON-STRUCTURAL ONE BY WOOD BUCK):

12) WHERE WINDOW IS INSTALLED IN MASONRY OPENING WITH A NON-STRUCTURAL ONE BY WOOD BUCK (NOTE 7), USE A 3/16" DIA. TAPPER CONCRETE SCREW OF SUFFICIENT LTH. TO ACHIEVE MIN. EMBEDMENT OF 1-1/4" INTO MASONRY OR CONCRETE.
13) SEE THIS SHEET FOR TAPPER INSTALLATION ANCHOR LOCATION CHART. LETTER DESIGNATIONS ON THE TAPPER LOCATION CHART INDICATE WHERE TAPPER CONCRETE SCREWS ARE TO BE INSTALLED WHEN USING THE EXTERIOR ELEVATION AS A KEY.
14) TAPPER (RAWL) CONCRETE SCREW MANUFACTURED BY POWERS FASTENING, INC. WILL BE USED. TAPCON (by ELCO TEXTRON INC.) OR TITEN (by SIMPSON STRONG-TIE) CAN BE SUBSTITUTED WITH THE FOLLOWING LIMITATIONS FOR THE SINGLE HUNG WINDOW SIZES (1) 18 1/8 x 62 AND (2) 30 1/2 x 84:
a) LIMIT TO 65 PSF, OR
b) INSTALL ONE ADDITIONAL FASTENER IN EACH JAMB OVER CHART REQUIREMENTS AT LOCATIONS H AND I.
15) ALL REMAINING FACTORY APPLIED INSTALLATION FASTENER HOLES NOT USED FOR TAPPER CONCRETE SCREW INSTALLATION SHOULD BE FILLED WITH #8 WOOD SCREWS OF SUFFICIENT LTH. TO PROVIDE MIN. 5/8 IN. EMBEDMENT INTO WOOD BUCK.

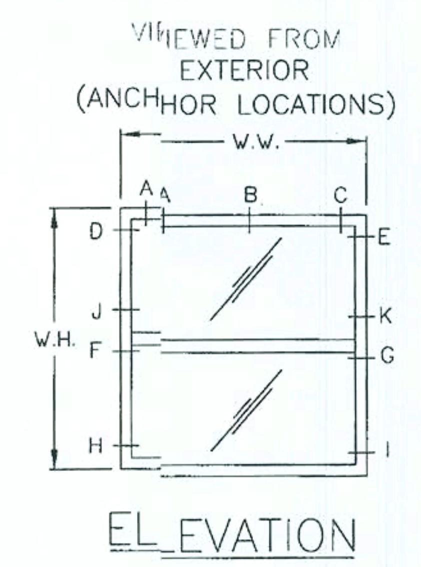

#10 WOOD SCREW (WITH STRUCTURAL TWO BY WOOD BUCK AND OPTIONAL ONE BY WOOD BUCK - SECTION A-A ALTERNATE ILLUSTRATES THIS OPTION, SIMILAR FOR SECTION B-B):

16) WHERE WINDOW IS INSTALLED IN MASONRY OPENING WITH A STRUCTUAL TWO BY WOOD BUCK, USE #10 WOOD SCREWS (ANSI B18.6.1) OF SUFFICIENT LENGTH TO ACHIEVE 1-3/8" MIN. EMBEDMENT INTO THE TWO BY WOOD BUCK.
16A) IF A TWO BY & ONE BY WOOD BUCK ARE USED (SEE SECTION A-A ALTERNATE, SIMILAR FOR SECTION B-B), THEN #10 WOOD SCREWS OF SUFFICIENT LENGTH TO ACHIEVE 1-3/8" MIN. EMBEDMENT INTO THE TWO BY WOOD BUCK WILL BE USED AND THE ONE BY WOOD BUCK WILL BE SECURED TO THE TWO BY WOOD BUCK AS REQUIRED IN NOTE 6 & 7.
17) #10 WOOD SCREWS SHALL BE INSTALLED AT <u>ALL</u> FACTORY APPLIED INSTALLATION FASTENER HOLE LOCATIONS.
18) WOOD SCREWS SHALL NOT BE USED TO FASTEN ASSEMBLY INTO THE END GRAIN OF WOOD.

DESIGN PRESSURE RATING & FBC REQUIREMENTS

19) IF EXACT WINDOW SIZE IS NOT LISTED IN TAPPER ANCHOR CHART FOR NON-STRUCTURAL BUCK INSTALLATION, USE ANCHOR QUANTITY LISTED FOR NEXT LARGER SIZE, FOR THE APPROPRIATE DESIGN PRESSURE REQ'D.
20) INSTALLATIONS DEPICTED IN THESE INSTRUCTIONS ACCEPTABLE FOR DESIGN PRESSURES TO 70 PSF FOR THE WINDOW SIZES SHOWN IN THE CHART. DESIGN PRESSURES (D.P.) SHOWN ARE POSITIVE AND NEGATIVE.
21) GLASS THICKNESS MAY VARY PER THE REQUIREMENTS OF ASTM E1300 GLASS CHARTS.
22) COMPLIES WITH FBC, CHAPTER 17 SECTIONS 1707.4.4.1 FOR ANCHORING REQUIREMENTS, 1707.4.4.2 FOR MASONRY, CONCRETE OR OTHER STRUCTURAL SUBSTRATES AND 1707.4.4.3 FOR WOOD OR APPROVED FRAMING MEMBERS, MARCH 1, 2002.
23) TWO BY WOOD BUCK AND/OR FRAMING AT THE HEAD AND JAMBS TO BE SECURELY FASTENED TO TRANSFER THE LOAD TO THE MASONRY, CONCRETE OR OTHER STRUCTURAL SUBSTRATE PER FBC, SECTION 1707.4.4.2 AND THE ENGINEER OF RECORD'S DETAILS.

REV B C D E
FLORIDA EXTRUDERS INTERNATIONAL, INC.
2540 JEWETT LANE
SANFORD, FLORIDA
CERTIFICATE OF AUTHORIZATION NO. 9235
TITLE: INSTALLATION DETAIL
SGL. HUNG FLANGE WINDOWS - SERIES 1000, 1500 & 2000
DRAWN BY: RJA
APPROVED BY: RJA
DATE: 7/29/04
SCALE: NTS
DWG.: FLEX0016, SHT 2 OF 2

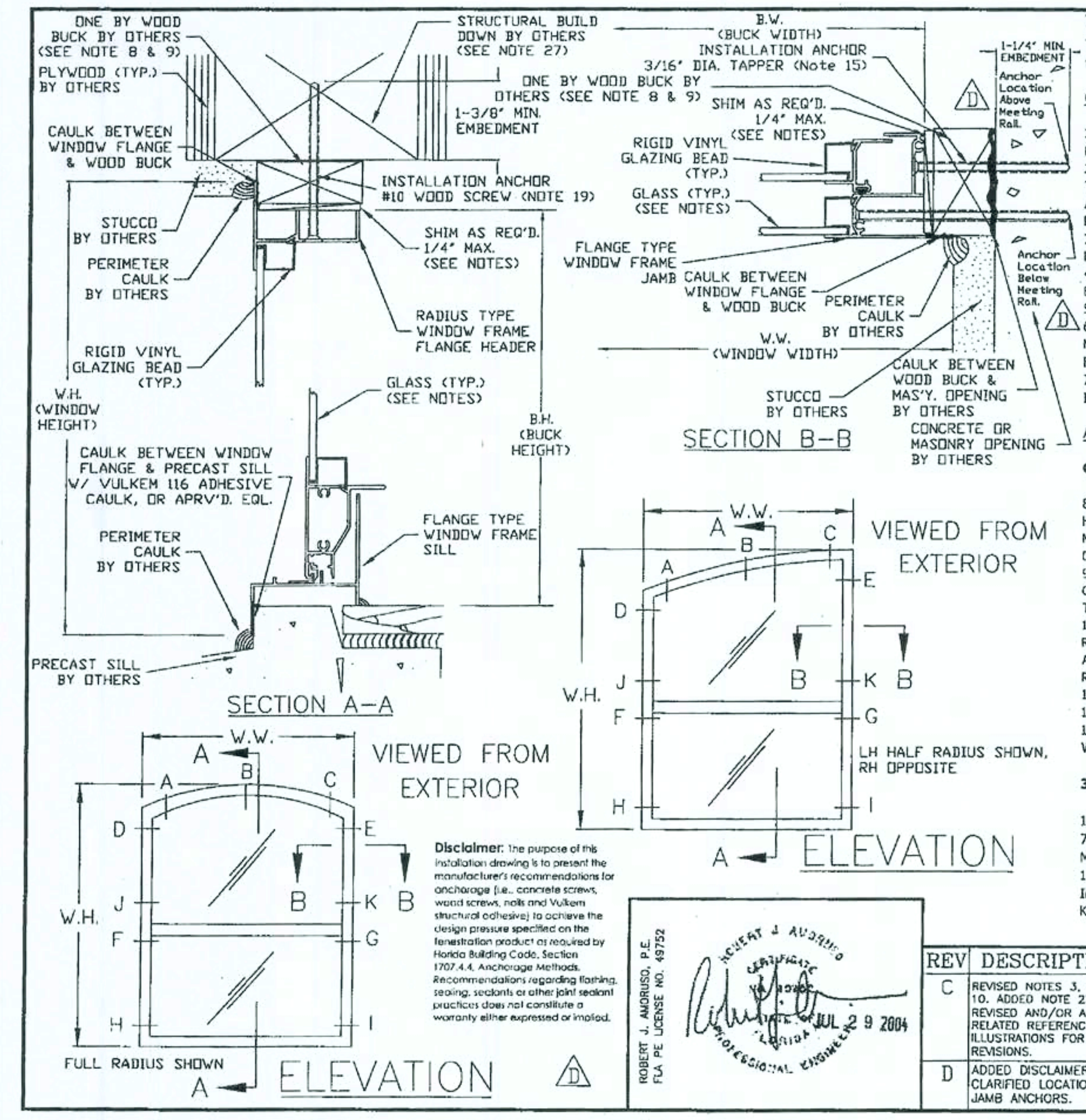

Disclaimer: The purpose of this installation drawing is to present the manufacturer's recommendations for anchorage (i.e., concrete screws, wood screws, nails and Vulkem structural adhesive) to achieve the design pressure specified on the fenestration product as required by Florida Building Code, Section 1707.4.4, Anchorage Methods. Recommendations regarding flashing, sealing, sealants or other joint sealant practices does not constitute a warranty either expressed or implied.

ROBERT J. AMORUSO, P.E.
FLA PE LICENSE NO. 48752
JUL 2 9 2004

IMPORTANT IIORMATION & GENERAL NOTES

These notes are providto ensure proper installation of Florida Extruders Milestone products and must be followed fully.

GENERAL INSTALLATICINSTRUCTIONS

1) SHIM AS REQ'D. AT CH INSTALLATION ANCHOR WITH LOAD BEARING SHIM. MAX. ALLOWABLE SHIM STACK TO BE 1/4".
2) USE SILICONIZED A/LIC CAULK BEHIND WINDOW FLANGE AT HEAD & JAMBS. SILL MUST BE ATTACHED TO THE SUBSTRATE WITHLKEM 116 ADHESIVE CAULK OR APPROVED EQUAL. APPLICATION OF VULKEM 116 ADHESIVE CAULK OR AROVED EQUAL AT FRAME SILL MUST COMPLY WITH SEALANT MANUFACTURER'S RECOMMENDATIONS.
3) USE SILICONIZED A/LIC CAULK FOR PERIMETER SEAL AROUND EXTERIOR OF WINDOW FLANGE AND TO SEAL HEADS OF INSTALLATI FASTENERS.
4) FLORIDA EXTRUDER000 SERIES SINGLE HUNG IS SHOWN. THIS PRINT ALSO APPLIES TO THE FLORIDA EXTRUDERS 1500 AND00 SERIES SINGLE HUNGS.
5) WINDOW FRAME MARIAL: ALUMINUM ALLOY 6063.
6) BUILD DOWN AROU CURVED PORTION OF WINDOW FRAME TO BE ENGINEERED BY OTHERS. BUILD DOWN MUST BE OF SUFFICIESTRENGTH TO ADEQUATELY TRANSFER LOAD FROM WINDOW TO THE STRUCTURE PER FBC, SECTION 1707.4.4
7) WINDOW UNIT CAN MULLED TO OTHER UNITS USING ALUMINUM TUBE MULLION. SEE MULLION INSTALLATION SHEETOR REQUIREMENTS.

ANCHOR INSTALLATIONSTRUCTIONS

GENERAL:

8) NAIL ATTACHMENT NON-STRUCTURAL ONE BY BUCK IS 4" FROM EACH CORNER AND 8" ON CENTER. USE A HARDENED "T-NAIL" WI A 0.097" DIAMETER AND 1 3/8" LENGTH (5/8" EMBEDMENT), A HARDENED "MASONRY NAIL" WITH A 0.148" DIETER AND 1 1/2" LENGTH (3/4" EMBEDMENT) OR EQUIVALENT FOR THE JAMBS. USE A 0.113" DIAMETER COMN WIRE NAIL WITH A 3/4" EMBEDMENT OR EQUIVALENT FOR THE HEAD.
9) APPLIES TO ALL NOITRUCTURAL BUCKS LESS THAN 1 1/2" THICKNESS. NOT INTENDED TO LIMIT TO NOMINAL ONE BY WOOD BUCK OY. BUCKS GREATER THAN 1" NOMIMAL (3/4" THICK) AND LESS THAN 2" NOMINAL (1 1/2" THICK) WILL REQUIREIL LENGTH SUFFICIENT TO MEET EMBEDMENT REQUIREMENTS OF NOTE 8.
10) ALL INSTALLATIONCHORS MUST BE MADE OF CORROSION RESISTANT MATERIALS OR HAVE A CORROSION RESISTANT COATING AIED SUITABLE FOR THE ENVIRONMENT AND/OR FRAMING MATERIAL. WHERE ANCHORS ARE USED IN PRESSURRESERVATIVE TREATED WOOD, THE WOOD SUPPLIER SHALL BE CONSULTED FOR RECOMMENDATION OFCHORS COMPATIBLE WITH THE PRESSURE-PRESERVATIVE TREATMENT PROCESS USED.
11) ALL FIELD SUPPLIEIOLES IN THE FRAME (IF REQUIRED) WILL BE 3/16" IN DIAMETER.
12) WOOD SCREWS SH. MEET ANSI B18.6.1 DIMENSIONAL REQUIREMENTS.
13) IF WOOD TENDS TPLIT, PRE-BORE HOLES AS FOLLOWS: #8 WOOD SCREW - 1/8" DIA. PILOT HOLE & #10 WOOD SCREW - 9/64" I. PILOT HOLE (NATIONAL DESIGN SPECIFICATION FOR WOOD CONSTRUCTION).

3/16" DIA. TAPPER CICRETE SCREW (WITH NON-STRUCTURAL ONE BY WOOD BUCK):

15) WHERE WINDOW IISTALLED IN MASONRY OPENING WITH A NON-STRUCTURAL ONE BY WOOD BUCK (NOTE 7), USE A 3/16" DIA. TAER CONCRETE SCREW OF SUFFICIENT LTH. TO ACHIEVE MIN. EMBEDMENT OF 1-1/4" INTO MASONRY OR CONCRET
16) SEE SHEET 2 FOR IFALLATION ANCHOR LOCATION CHART. LETTER DESIGNATIONS ON THE LOCATION CHART INDICATE WHERE TAPF CONCRETE SCREWS ARE TO BE INSTALLED WHEN USING THE EXTERIOR ELEVATION AS A KEY.

[SEE SHEET 2 FOR CONTINUATION OF NOTES]

REV	DESCRIPTION	DATE	INI
C	REVISED NOTES 3, 8, 9 & 10. ADDED NOTE 27. REVISED AND/OR ADDED RELATED REFERENCES AND ILLUSTRATIONS FOR NOTE REVISIONS.	12/19/03	RJ
D	ADDED DISCLAIMER AND CLARIFIED LOCATION OF JAMB ANCHORS.	7/29/04	RJ

FLORIDA EXTRUDERS INTERNATIONAL, INC.
2540 JEWETT LANE
SANFORD, FLORIDA
CERTIFICATE OF AUTHORIZATION NO. 9235
TITLE: INSTALLATION DETAIL SINGLE HUNG RADIUS HEAD
FLANGE W/FRAME BUILD DOWN - SERIES 1000, 1500 & 2000
DRAWN BY: JBH
APPROVED BY: RJA
DATE: 7/29/04
SCALE: NTS
DWG.: FLEX0040 SHEET 1 OF 2

ANCHOR LOCATION CHART (SEE NOTES BELOW)

CALL SIZE	BUCK SIZE	LOCATIONS IN HEAD (see note 1 below) 30PSF TO 40PSF	LOCATIONS IN HEAD (see note 1 below) 41PSF TO 70PSF	LOCATIONS IN JAMB (see notes 2 & 3 below) 30PSF TO 40PSF	LOCATIONS IN JAMB (see notes 2 & 3 below) 41PSF TO 70PSF
12	18 1/8 X 27 5/16	A,C	A,C	F,G	F,G
13	18 1/8 X 39 11/16	A,C	A,C	F,G	F,G
14	18 1/8 X 51 15/16	A,C	A,C	F,G	F,G
145	18 1/8 X 57 19/32	A,C	A,C	F,G	F,G (a)
15	18 1/8 X 64 5/16	A,C	A,C	F,G	F,G (a)
16	18 1/8 X 73 5/16	A,C	A,C	F,G (a)	F,G,H,I
1H2	25 1/2 X 28 9/16	A,C	A,C	F,G	F,G
1H3	25 1/2 X 40 15/16	A,C	A,C	F,G	F,G
1H4	25 1/2 X 53 3/16	A,C	A,C	F,G	F,G,H,I
1H45	25 1/2 X 58 13/16	A,C	A,C	F,G	F,G,H,I
1H5	25 1/2 X 65 9/16	A,C	A,C	F,G	F,G,H,I
1H6	25 1/2 X 74 9/16	A,C	A,C	F,G	F,G,H,I
30 1/2 X 30 7/32	29 1/2 X 29 7/32	A,C	A,C	F,G	F,G
30 1/2 X 42 19/32	29 1/2 X 41 19/32	A,C	A,C	F,G	F,G
30 1/2 X 54 27/32	29 1/2 X 53 27/32	A,C	A,C	F,G	F,G,H,I
30 1/2 X 60 15/32	29 1/2 X 59 15/32	A,C	A,C	F,G	F,G,H,I
30 1/2 X 67 7/32	29 1/2 X 66 7/32	A,C	A,C	F,G (a)	F,G,H,I
30 1/2 X 76 7/32	29 1/2 X 75 7/32	A,C	A,C	F,G,H,I	F,G,H,I (b)
22	36 x 30 5/16	A,B,C	A,B,C	F,G	F,G
23	36 x 42 11/16	A,B,C	A,B,C	F,G	F,G (a)
24	36 x 54 15/16	A,B,C	A,B,C	F,G	F,G,H,I
245	36 x 60 9/16	A,B,C	A,B,C	F,G (a)	F,G,H,I
25	36 x 67 5/16	A,B,C	A,B,C	F,G,H,I	F,G,H,I (b)
26	36 x 76 5/16	A,B,C	A,B,C	F,G,H,I	D,E,F,G,H,I
42 x 32 5/32	41 x 31 5/32	A,B,C	A,B,C	F,G	F,G
42 x 44 17/32	41 x 43 17/32	A,B,C	A,B,C	F,G	F,G,H,I
42 x 56 25/32	41 x 55 25/32	A,B,C	A,B,C	F,G	F,G,H,I
42 x 62 3/8	41 x 61 3/8	A,B,C	A,B,C	F,G,H,I	F,G,H,I
42 x 69 5/32	41 x 68 5/32	A,B,C	A,B,C	F,G,H,I	D,E,F,G,H,I
42 x 78 5/32	41 x 77 5/32	A,B,C	A,B,C	F,G,H,I	D,E,F,G,H,I
48 x 33 5/32	47 x 32 5/32	A,B,C	A,B,C	F,G	F,G
48 x 45 17/32	47 x 44 17/32	A,B,C	A,B,C	F,G	F,G,H,I
48 x 57 25/32	47 x 56 25/32	A,B,C	A,B,C	F,G (a)	F,G,H,I
48 x 63 3/8	47 x 62 3/8	A,B,C	A,B,C	F,G,H,I	F,G,H,I (b)
48 x 70 5/32	47 x 69 5/32	A,B,C	A,B,C	F,G,H,I	D,E,F,G,H,I
48 x 79 5/32	47 x 78 5/32	A,B,C	A,B,C	F,G,H,I	D,E,F,G,H,I (c)
32	52 1/8 X 33	A,B,C	A,B,C	F,G	F,G
33	52 1/8 X 45 3/8	A,B,C	A,B,C	F,G	F,G,H,I
34	52 1/8 X 57 5/8	A,B,C	A,B,C	F,G,H,I	F,G,H,I
345	52 1/8 X 63 1/4	A,B,C	A,B,C	F,G,H,I	D,E,F,G,H,I
35	52 1/8 X 70	A,B,C	A,B,C	F,G,H,I	D,E,F,G,H,I
36	52 1/8 X 79	A,B,C	A,B,C	F,G,H,I	D,E,F,G,H,I (c)

ANCHOR LOCATION CHART NOTES:

1. Locations in HEAD for #10 Wood Screws into structural "two by" wood buck or "one by" wood buck/structural build-down.
2. Locations in JAMB for 3/16" TAPPER Concrete Screws into non-structural buck & concrete or masonry.
3. Locations in JAMB for #10 Wood Screws into structural "two by" buck. Where indicated by (a), (b) or (c) above, additional #10 Wood Screws shall be added at the following locations.
   - (a) One additional anchor required in each jamb at locations "H" and "I".
   - (b) One additional anchor required in each jamb at locations "D" and "E".
   - (c) One additional anchor required in each jamb at locations "J" and "K".
4. Dimensions given are for half radius head units, full radius will be shorter.

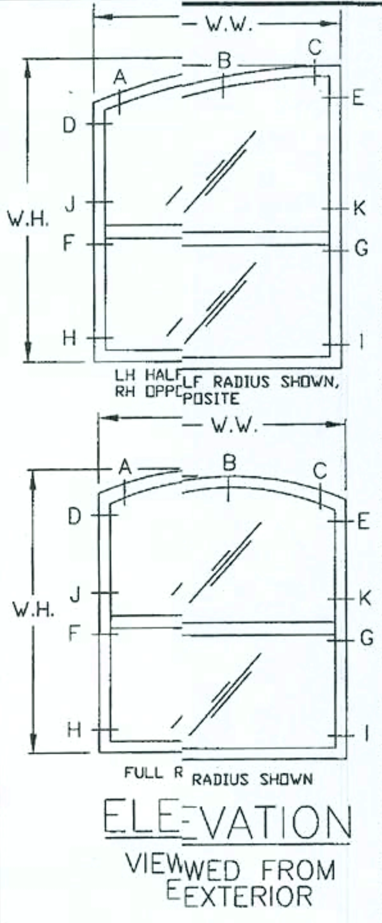

IMPORTANT INFORMATION & GENERAL NOTES (cont.)

ANCHOR INSTALLATION INSTRUCTIONS (cont.)

3/16" DIA. TAPPER CONCRETE SCREW (WITH NON-STRUCTURAL ONE BY WOOD BUCK) (cont.):

17) TAPPER (RAWL) CONCRETE SCREW MANUFACTURED BY POWERS FASTENING, INC. WILL BE USED. TAPCON (by ELCO TEXTRON INC.) OR TITEN (by SIMPSON STRONG-TIE) CAN BE SUBSTITUTED WITH THE FOLLOWING LIMITATIONS FOR THE SINGLE HUNG WINDOW CALL SIZE 15:
a) LIMIT TO 65 PSF, OR
b) INSTALL ONE ADDITIONAL FASTENER IN EACH JAMB OVER CHART REQUIREMENTS AT LOCATIONS H AND I.
18) ALL REMAINING FACTORY APPLIED INSTALLATION FASTENER HOLES NOT USED FOR TAPPER CONCRETE SCREW INSTALLATION SHOULD BE FILLED WITH #8 WOOD SCREWS OF SUFFICIENT LTH. TO PROVIDE MIN. 5/8 IN. EMBEDMENT INTO WOOD BUCK.

#10 WOOD SCREW (WITH STRUCTURAL TWO BY WOOD BUCK <u>OR</u> ONE BY WOOD BUCK/STRUCTURAL BUILD-DOWN):

19) WHERE WINDOW IS INSTALLED IN MASONRY OPENING WITH A STRUCTUAL TWO BY WOOD BUCK OR ONE BY WOOD BUCK/STRUCTURAL BUILD-DOWN, USE #10 WOOD SCREWS (ANSI B18.6.1) OF SUFFICIENT LENGTH TO ACHIEVE 1-3/8" MIN. EMBEDMENT INTO THE TWO BY WOOD BUCK OR THE STRUCTURAL BUILD-DOWN FRAMING COMPONENT.
20) SEE SHEET 2 FOR INSTALLATION ANCHOR LOCATION CHART. LETTER DESIGNATIONS ON THE LOCATION CHART INDICATE WHERE #10 WOOD SCREWS ARE TO BE INSTALLED WHEN USING THE EXTERIOR ELEVATION AS A KEY. ALSO SEE "ANCHOR LOCATION CHART NOTES", NOTE 3, FOR WINDOW SIZES REQUIRING ADDITIONAL ANCHORS AND LOCATIONS.
21) #10 WOOD SCREWS SHALL NOT BE USED TO FASTEN ASSEMBLY INTO THE END GRAIN OF WOOD.
22) ALL REMAINING FACTORY APPLIED INSTALLATION FASTENER HOLES NOT USED FOR #10 WOOD SCREW INSTALLATION SHOULD BE FILLED WITH #8 WOOD SCREWS OF SUFFICIENT LTH. TO PROVIDE MIN. 5/8 IN. EMBEDMENT INTO WOOD BUCK.

DESIGN PRESSURE RATING & FBC REQUIREMENTS

23) IF EXACT WINDOW SIZE IS NOT LISTED IN ANCHOR LOCATION CHART, USE ANCHOR QUANTITY LISTED FOR NEXT LARGER SIZE, FOR THE APPROPRIATE DESIGN PRESSURE REQ'D.
24) INSTALLATIONS DEPICTED IN THESE INSTRUCTIONS ACCEPTABLE FOR DESIGN PRESSURES TO 70 PSF FOR THE WINDOW SIZES SHOWN IN THE CHART. DESIGN PRESSURES (D.P.) SHOWN ARE POSITIVE AND NEGATIVE.
25) GLASS THICKNESS MAY VARY PER THE REQUIREMENTS OF ASTM E1300 GLASS CHARTS.
26) COMPLIES WITH CHAPTER 17 SECTIONS 1707.4.4.1 FOR ANCHORING REQUIREMENTS, 1707.4.4.2 FOR MASONRY, CONCRETE OR OTHER STRUCTURAL SUBSTRATES AND 1707.4.4.3 FOR WOOD OR APPROVED FRAMING MEMBERS, MARCH 1, 2002.
27) STRUCTURAL BUILD-DOWN AT THE HEAD TO BE DESIGN TO TRANSFER THE LOAD TO THE MASONRY, CONCRETE OR OTHER STRUCTURAL SUBSTRATE PER FBC, SECTION 1707.4.4.2 OR TO THE WOOD OR APPROVED FRAMING MEMBERS PER FBC, SECTION 1707.4.4.3AND THE ENGINEER OF RECORD'S DETAILS.

REV B C D
FLORIDA EXTRUDERS INTERNATIONAL, INC.
2540 JEWETT LANE
SANFORD, FLORIDA
CERTIFICATE OF AUTHORIZATION NO. 9235
TITLE: INSTALLATION DETAIL SINGLE HUNG RADIUS HEAD
FLANGE W/FRAME BUILD DOWN - SERIES 1000, 1500 & 2000
DRAWN BY: RJA
APPROVED BY: RJA
DATE: 7/29/04
SCALE: NTS
DWG.: FLEX0040 SHEET 2 OF 2

REVISIONS :

Maronda Homes
COPYRIGHT © 2002 MARONDA HOMES
(407) 321-0064 4005 MARONDA WAY SANFORD, FLORIDA

FLORIDA EXTRUDERS
WINDOWS IN BLOCK

RELEASE DATE:

SHEET:
1 of 3

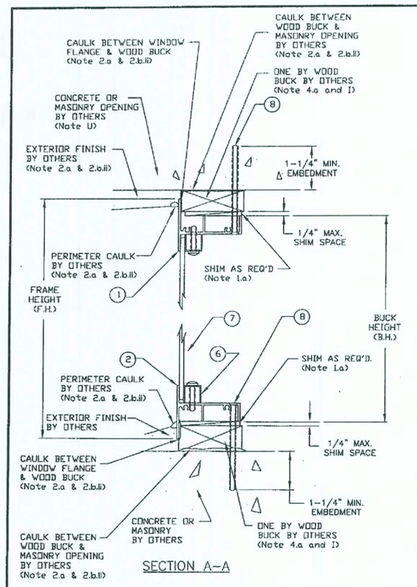

SECTION A–A

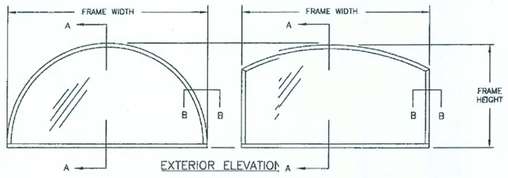

EXTERIOR ELEVATION

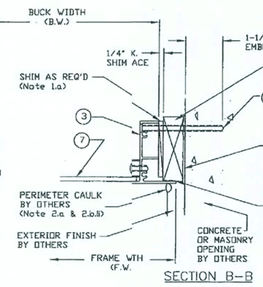

SECTION B–B

GENERAL NOTES

(1 to 15) See General Notes Drawing FLEX20100, Sheet 1 & 2.

(A) Milestone Series 1000 Designer Fixed Aluminum Window is shown. Also applicable to Series 1750 and 2000 Designer Fixed Aluminum Windows.

(B) Drawing applicable to Non-Impact Resistant glazed windows.

(C) Production Glazing may differ from that tested as allowed by ANSI/AAMA/NWWDA 101/I.S. 2 - 97 or 101/I.S. 2 NAFS and applicable Building Code. See Note 12 and 13 on Drawing FLEX 20100 for further details.

(D) For Fastener Location & Quantities see Sheet 2 of this drawing. See Note (H) regarding deviations.

(E) Concrete screw edge distance measured from edge of concrete/masonry/block to centerline of concrete screw must meet or exceed 2 1/4". Minimum size and embedment per Parts List. See Note (H) regarding deviations.

(F) Wood or tapping screw edge distance measured from edge of wood to centerline of wood or tapping screw must meet or exceed 1". Minimum size and embedment per Parts List. See Note (H) regarding deviations.

(G) All field supplied holes in the frame (if required) will be 3/16" in diameter for 3/16" concrete screws and #10 wood screws.

(H) Any deviation less than the minimum requirements stated must be approved by the manufacturer or engineered by "other" Design Professional in accordance with the applicable Building Code and Product Approval.

PARTS LIST

1 Head - Flange Frame
2 Sill - Flange Frame
3 Jamb - Flange Frame
4 Not Used
5 Not Used
6 Glazing Bead - Rigiinyl
7 Glazing - See Note and (C)
8 3/16" Dia. Flat Heacncrete Screw with minimum working li in shear of 255 lbs at 1 1/4" embedment. SNote (J) on this drawing and Note 7 on Drag FLEX20100.
9 #10 Wood or Tapplscrew with a minimum embedment of 1-3/nto "Structural Two By Buck or Framing". 5 Note (L) on this drawing and Note 8 on Drag FLEX20100.

DISCLAIMER: The purpose of this installation drawing is to present the manufacturer's recommendations for anchorage (i.e., concrete screws, wood screws, tapping screws, nails and Vulkem Structural Adhesive (or other approved equal) as applicable) to achieve the design pressure specified on the fenestration product as required by the 2001 Florida Building Code (FBC), Section 1707.4.4, 2004 FBC-Building, Section 1714.5.4 and the 2004 FBC-Residential, Section R613.6. Recommendations regarding flashing, sealing, sealants or other joint sealant practices does not constitute a warranty either expressed or implied.

Florida Extruders Int'l., Inc.
2540 Jewett Lane - Sanford, FL 32771
407-323-3300 - 407-322-3507 (fax)
www.floridaextruders.com
Florida COA No. 9235

TITLE: Milestone Series 1000, 1750 and 2000 Non-Impact Resistant Aluminum Flange Frame Designer Fixed Window Installation Drawing for Masonry Substrate & Concrete Header

No.	Date	By	Description
0	12/27/05	KJA	S.ownersen FLEX0033

Date: 12/27/05
Scale: NTS
Drawn By: RJA
Checked By: JH

Robert J. Amoruso, P.E.
FL License No. 49752

Drawing No. FLEX28110
Sheet 1 of 2

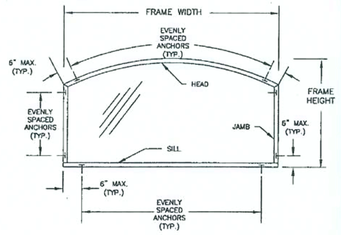

EXTERIOR ELEVATION

FASTENER SPACING ILLUSTRATION
EYEBROW ARCH DESIGNER WINDOW SHOWN AS EXAMPLE

EXAMPLE:

HEAD (CURVED PORTION) SECURED TO CONCRETE HEADER, JAMBS OR SILL SECURED TO CMU AND CAST-SILL RESPECTIVELY WITH ONE BY BUCK

USE 3/16" DIA. CONCRETE SCREWS AT 24" O.C. SPACING BETWEEN ANCHORS AND SPACED 6" MAXIMUM FROM CORNERS.

– or –

HEAD (CURVED PORTION), JAMBS OR SILL SECURED TO STRUCTURAL TWO BY BUCK (ATTACHED TO CONCRETE HEADER, JAMBS OR SILL)

USE #10 WOOD SCREWS AT 12" O.C. SPACING BETWEEN FASTENERS AND SPACED 6" MAXIMUM FROM CORNERS. (NOTE: 12" SPACING FOR EXAMPLE EYEBROW APPLICATION. OTHER APPLICATIONS MAY REQUIRE 10" SPACING PER NOTE (P))

FASTENER INSTALLATION INSTRUCTIONS - FLEX28110

3/16" DIA. CONCRETE SCREW WITH NON-STRUCTURAL ONE BY WOOD BUCK AND CONCRETE BUILD-DOWN:

(I) Nail attachment of non-structural one by buck per Note 4.a.ii.2 Drawing FLEX20100.
(J) Where window is installed in an opening with a non structural one by wood buck for the head, sill and jambs, use a 3/16" diameter concrete screw of sufficient length to achieve minimum embedment of 1-1/4" into masonry or concrete. See "Parts List" on Sheet 1 of this drawing for concrete screw size, embedment and load requirements. See FLEX20100, Note 7 for additional concrete screw requirements.
(K) Fastener spacing shall be per Notes (O), (Q) and (R) below.

#10 WOOD SCREW WITH STRUCTURAL TWO BY WOOD BUCK AND CONCRETE BUILD-DOWN. USED WHEN TWO BY BUCK EMPLOYED IN LIEU OF ONE BY BUCK (THIS CONFIGURATION NOT SHOWN):

(L) Where window is installed in an opening with a structural two by wood buck for the head, sill and jambs, use #10 wood screws of sufficient length to achieve 1-3/8" min. embedment into the two by wood buck. See "Parts List" on Sheet 1 of this drawing for wood screw size and embedment. See FLEX20100, Note 8 for additional wood screw requirements.
(M) Wood screws shall not be used to fasten assembly into the end grain of wood.
(N) Fastener spacing shall be per Notes (P), (Q) and (R) below.

FASTENER SPACING (See Elevation View on this Sheet):

(O) Concrete screw spacing shall be as follows:
- 6" maximum from each corner of head, sill or jambs, and
- evenly spaced between corner anchors but not exceeding 24" o.c. spacing in head, sill or jambs.

(P) #10 wood screw spacing shall be as follows:
- 6" maximum from each corner of head, sill or jambs, and
- evenly spaced between corner anchors but not exceeding 12" o.c. spacing in head, sill or jambs for the following configurations:
  - eyebrow arch
  - half-circle arch
  - half-eyebrow
  - octagon
  - fan
  - pentold
  - full-circle
  - half-circle
  - triangle
  - trapezoid
  - oval
- evenly spaced between corner anchors but not exceeding 10" o.c. spacing in head, sill or jambs for the following configurations:
  - quarter-circle
  - quarter-circle arch
  - half-fan

(Q) Spacing in Note (O) and (P) above based on the use of either a concrete screw or #10 wood screw as required for securing the window frame into the substrate as follows (see Illustration this sheet):
- Concrete screw into concrete or masonry using a non-structural One By Wood Buck.
- #10 wood screw into a Two By Wood Buck structurally attached to concrete or masonry substrate.

(R) If configuration requires combination of concrete screw and #10 wood screw in either a head, sill or jamb, the lower of the maximum spacings above shall be used.

DESIGN PRESSURE RATING & FBC CODE COMPLIANCE

(S) Installations depicted in these instructions acceptable for design pressures to 70 PSF. Design Pressures (D.P.) are positive and negative. Overall window assembly design pressure may be less than that shown in the fastener quantity table and shall be determined in accordance with Note 13 of FLEX20100.
(T) Production Glazing may differ from that tested as allowed by ANSI/AAMA/NWWDA 101/I.S. 2 - 97 or 101/I.S. 2 NAFS and applicable Building Code. See Note 12 and 13 on Drawing FLEX 20100 for further details.
(U) Concrete Header at head and/or two by wood buck and/or framing at the head, sill and jambs to be securely fastened to transfer the load to the masonry, concrete or other structural substrate per the FBC and the engineer of record's details as applicable.
(V) See FLEX20100, Notes 10 to 15 for additional FBC Code Compliance.

Florida Extruders Int'l., Inc.
2540 Jewett Lane - Sanford, FL 32771
407-323-3300 - 407-322-3507 (fax)
www.floridaextruders.com
Florida COA No. 9235

TITLE: Milestone Series 1000, 1750 and 2000 Non-Impact Resistant Aluminum Flange Frame Designer Fixed Window Installation Drawing for Masonry Substrate & Concrete Header

No.	Date	By	Description
0	12/27/05	KJA	S.ownersen FLEX0033

Date: 12/27/05
Scale: NTS
Drawn By: RJA
Checked By: JH

Drawing No. FLEX28110
Sheet 2 of 2

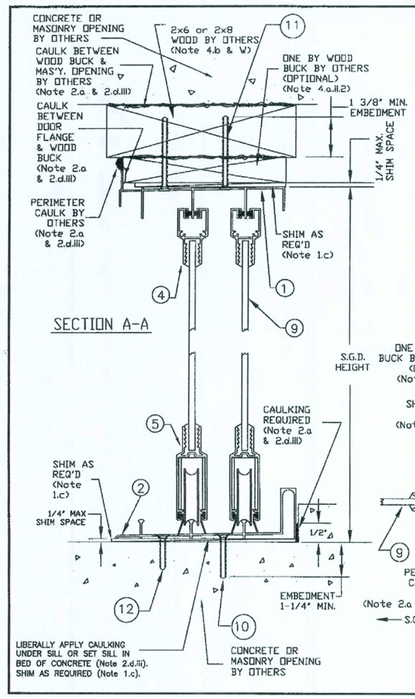

SECTION A–A

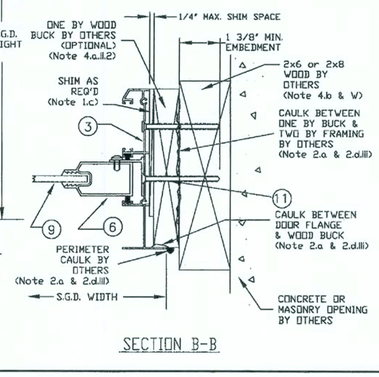

SECTION B–B

PARTS LIST

1 Head - Flange Frame
2 Sill - Flange Frame
3 Jamb - Flange Frame
4 Head - Panel
5 Sill - Panel
6 Lock Stile - Panel
7 Interlock - Panel
8 Hook Strip
9 Glazing - See Note (B) and (V)
10 3/16" Dia. Flat Head Concrete Screw with minimum working load in shear of 255 lbs at 1 1/4" embedment. See Note (R) on this drawing and Note 7 on Drawing FLEX20100.
11 #10 Wood or Tapping Screw with a minimum embedment of 1-3/8" into two by framing. See Note (P) on this drawing and Note 8 on Drawing FLEX20100.
12 #10 Wood or Tapping Screw with Plastic Inserts (Note 8.j on FLEX20100) at a minimum embedment of 1" into the concrete sill. See Note (O) on this drawing and Note 8 on Drawing FLEX20100.
13 #10 Wood or Tapping Screw with a minimum embedment of 7/8" into the "One By Wood Buck". See Note (R) on this drawing and Note 8 on Drawing FLEX20100.

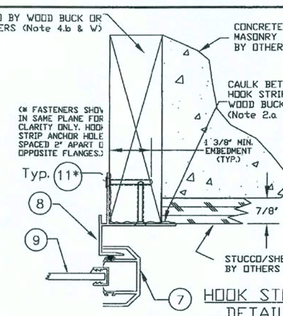

HOOK STRIP DETAIL

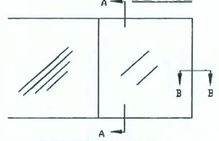

EXTERIOR ELEVATION
2 PANEL DOOR SHOWN
(SEE NOTES (C), (D) & (E))

DISCLAIMER: The purpose of this installation drawing is to present the manufacturer's recommendations for anchorage (i.e., concrete screws, wood screws, tapping screws, nails and Vulkem Structural Adhesive (or other approved equal) as applicable) to achieve the design pressure specified on the fenestration product as required by the 2001 Florida Building Code (FBC), Section 1707.4.4, 2004 FBC-Building, Section 1714.5.4 and the 2004 FBC-Residential, Section R613.6. Recommendations regarding flashing, sealing, sealants or other joint sealant practices does not constitute a warranty either expressed or implied.

Florida Extruders Int'l., Inc.
2540 Jewett Lane - Sanford, FL 32771
407-323-3300 - 407-322-3507 (fax)
www.floridaextruders.com
Florida COA No. 9235

TITLE: Milestone Series 1000 & 2000 Non-Impact Resistant Aluminum Flange Frame Designer Fixed Sill Installation Drawing for Masonry Substrate w/#10 Wood Screws

No.	Date	By	Description
0	12/27/05	KJA	S.ownersen FLEX0033

Date: 12/27/05
Scale: NTS
Drawn By: RJA
Checked By: JH

Robert J. Amoruso, P.E.
FL License No. 49752

Drawing No. FLEX24112
Sheet 1 of 2

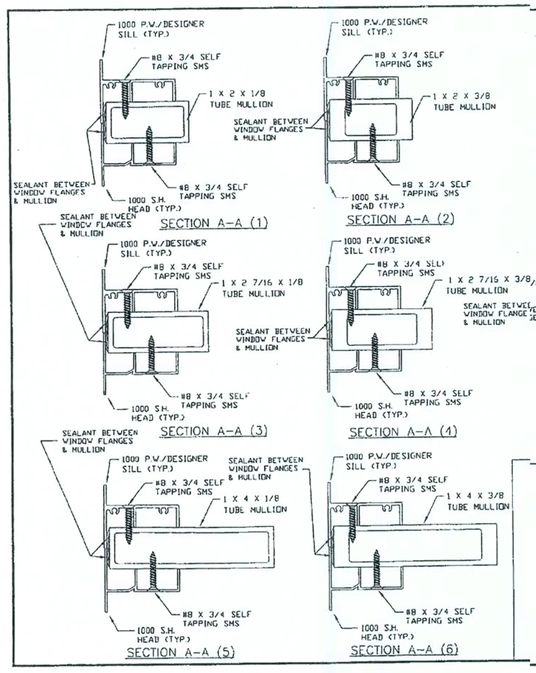

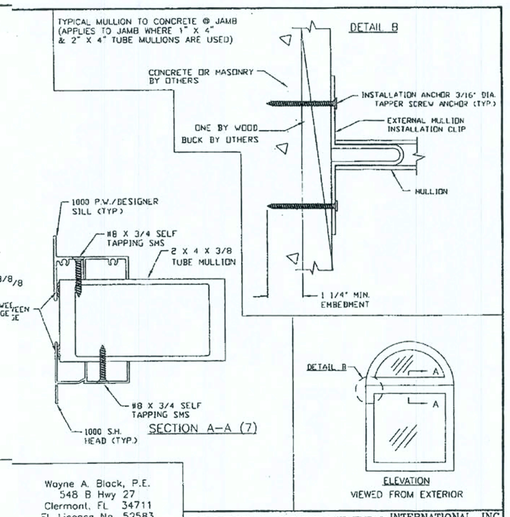

Wayne A. Block, P.E.
548 B Hwy 27
Clermont, FL 34711
FL License No. 52583

FLORIDA EXTRUDERS INTERNATIONAL, INC.
2540 JEWETT LANE
SANFORD, FLORIDA

TITLE: SER. 1000/1500 FLANGE SHEET 1 OF 2
HORIZONTAL MULLION SECTIONS

SEE OTHER SIDE (SHEET 2 OF 2) FOR DESIGN PRESSURE CAPACITIES

DRAWN BY: MSH	APPROVED BY: WAB
DATE: 6/17/04	SCALE: NTS	DWG.: 1HMFLG

REVISIONS :

Maronda Homes
4005 MARONDA WAY SANFORD, FLORIDA
(407) 321-0064

COPYRIGHT © 2002 MARONDA HOMES

FLORIDA EXTRUDERS
WINDOWS IN BLOCK
RELEASE DATE:

SHEET: 2 of 3

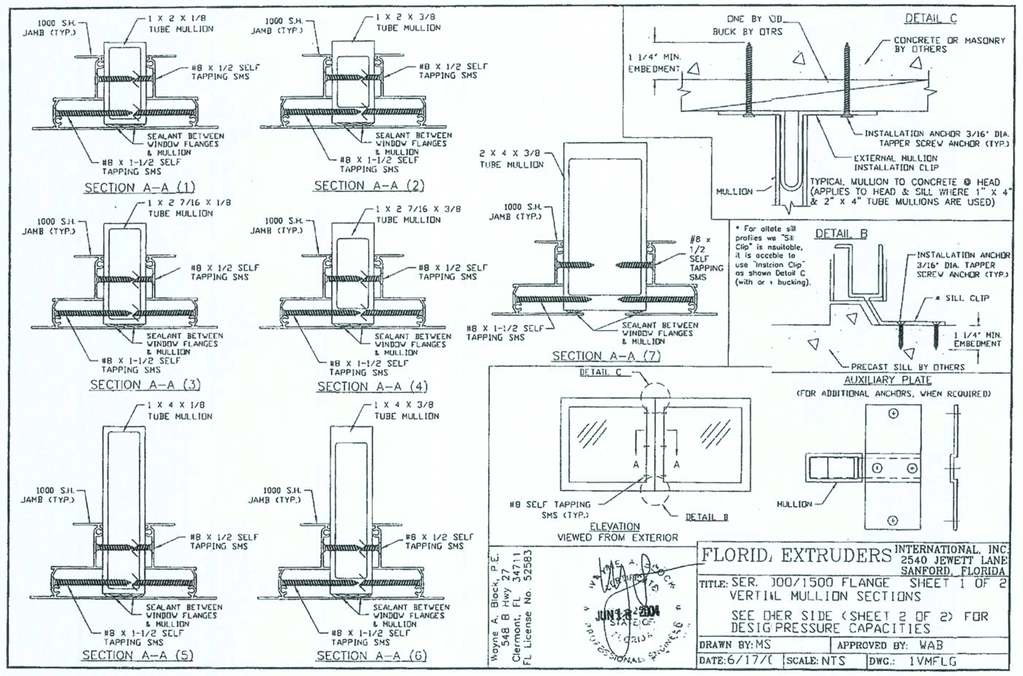

FASTENER INSTALLATION CHART

Nominal Door Size and Configuration	Door Size	REQUIRED QUANTITIES OF FASTENERS: HEAD (#8 WS) TO 45 PSF	HEAD (#8 WS) 45 PSF TO 60 PSF	HEAD (#8 WS) 61 PSF TO 70 PSF	SILL (C9) TO 45 PSF	SILL (C9) 46 PSF TO 60 PSF	SILL (C9) 61 PSF TO 70 PSF	JAMBS (#8 WS) TO 70 PSF	HOOK STRIP (#8 WS) TO 70 PSF
1068 XX OX XO	48 x 80	6	6	6	3	3	3	6	6
1068 XX OX XO	60 x 80	6	6	6	3	3	3	6	6
1068 XX OX XO	72 x 80	8	8	8	4	4	4	6	6
1068 XX OX XO	96 x 80	10	10	10	5	4	3	6	6
10080 XX OX XO	120 x 80	12	12	12	6	6	7 (D1)	6	6
1080 XX OX XO	60 x 96	6	6	6	3	3	3	10	10
1080 XX OX XO	72 x 96	8	8	8	4	4	4	10	10
1080 XX OX XO	96 x 96	10	10	10	5	5	6	10	10
10080 XX OX XO	120 x 96	12	12	12	6	6	7 (D1)	10	10
10100 XX OX XO	60 x 120	6	6	6	3	3	3	12	12
10100 XX OX XO	72 x 120	8	8	8	4	4	4	12	12
10100 XX OX XO	96 x 120	10	10	10	5	5	6	12	12
1068 OXO	100 7/8 x 80	12	12	12	6	6	6	8	8
12068 OXO	142 5/8 x 80	14	14	14	7	7	8 (D2)	8	8
12068 OXO	161 7/8 x 80	15	15	15	8	10 (D2)	11 (D2)	8	8
1080 OXO	100 7/8 x 96	12	12	12	6	5	6	10	10
12080 OXO	142 7/8 x 96	14	14	14	7	8 (D1)	9 (D2)	10	10
12080 OXO	161 7/8 x 96	15	15	15	8	11	12	10	10
10100 OXO	100 7/8 x	12	12	12	6	6	6	12	12
12010 OXO	142 7/8 x	14	14	14	7	8 (D1)	10 (D2)	12	12
2068 XXX	104 5/8 x 80	12	12	12	6	6	6	8	8
12068 XXX	142 5/8 x 80	14	14	14	7	7	8 (D1)	8	8
16068 XXX	178 5/8 x 80	16	16	16	8	10 (D2)	11 (D2)	8	8
2080 XXX	104 5/8 x 96	12	12	12	6	6	6	10	10
12080 XXX	142 5/8 x 96	14	14	14	7	8 (D1)	9 (D2)	10	10
16080 XXX	178 5/8 x 96	16	16	16	8	11 (D2)	13	10	10
2010 XXX	104 5/8 x	12	12	12	6	6	6	12	12
12010 XXX	142 5/8 x	14	14	14	7	9 (D2)	10 (D3)	12	12
10068 OXXO	118 5/8 x 80	12	12	12	6	6	7 (D1)	8	8
10068 OXXO	143 5/8 x 80	14	14	14	7	7	8 (D1)	8	8
10068 OXXO	191 5/8 x 80	18	18	18	8	10 (D1)	12 (D2)	8	8
10080 OXXO	118 5/8 x 96	12	12	12	6	6	7 (D1)	10	10
10080 OXXO	143 5/8 x 96	14	14	14	7	8 (D1)	9 (D2)	10	10
10080 OXXO	191 5/8 x 96	18	18	18	8	12 (D3)	14 (D4)	10	10
100100 OXXO	118 5/8 x	12	12	12	6	6	7 (D1)	12	12
120100 OXXO	143 5/8 x	14	14	14	7	9 (D2)	10 (D3)	12	12
180100 OXXO	191 5/8 x	18	18	22	10 (D4)	13 (D4)	16 (D7)	12	12
10068 XXXX	117 1/4 x 80	12	12	12	6	6	6	8	8
12068 XXXX	141 1/4 x 80	14	14	14	7	7	8 (D1)	8	8
16068 XXXX	189 1/4 x 80	18	18	18	9 (D1)	10 (D2)	12 (D4)	8	8
10080 XXXX	117 1/4 x 96	12	12	12	6	6	7 (D1)	10	10
12080 XXXX	141 1/4 x 96	14	14	14	7	8 (D1)	9 (D2)	10	10
16080 XXXX	189 1/4 x 96	18	18	18	9 (D1)	12 (D3)	13 (D5)	10	10
100100 XXXX	117 1/4 x	12	12	12	6	6	7 (D1)	12	12
120100 XXXX	141 1/4 x	14	14	14	7	8 (D1)	10 (D3)	12	12
160100 XXXX	189 1/4 x	18	18	21	10 (D3)	13 (D5)	16 (D7)	12	12

ANCHOR INSTALLATION CHART NOTES:

1) IN SOME CASES CONCRETE SCREWS ARE REQ'D. IN BOTH FACTORY APPLIED INSTALLATION HOLES. "D1" THROUGH "D7" DESIGNATES IN WHICH SIZE & CONFIGURATIONS TWO CONCRETE SCREWS ARE REQ'D.
2) "D1" MEANS, INSTALL TWO CONCRETE SCREWS IN ONE SET OF INSTALLATION HOLES.
3) "D2" MEANS, INSTALL TWO CONCRETE SCREWS IN TWO SETS OF INSTALLATION HOLES.
4) "D3" MEANS, INSTALL TWO CONCRETE SCREWS IN THREE SETS OF INSTALLATION HOLES.
5) "D4" MEANS, INSTALL TWO CONCRETE SCREWS IN FOUR SETS OF INSTALLATION HOLES.
6) "D5" MEANS, INSTALL TWO CONCRETE SCREWS IN FIVE SETS OF INSTALLATION HOLES.
7) "D6" MEANS, INSTALL TWO CONCRETE SCREWS IN SIX SETS OF INSTALLATION HOLES.
8) "D7" MEANS, INSTALL TWO CONCRETE SCREWS IN SEVEN SETS OF INSTALLATION HOLES.
9) LOCATION OF ADDITIONAL CONCRETE SCREWS IN SILL SHOULD BE PRIORITIZED AS FOLLOWS:
A: FIRST ADJACENT TO INTERLOCK OR BUTT STILES IN SILL.
B: SECONDLY, AT EACH END OF SILL NEAR JAMB CORNER, IF NEEDED.
C: LOCATIONS IN SILL OTHER THAN AS LISTED IN A & B.
10) C9 = CONCRETE SCREW AND W8 = WOOD SCREW

GENERAL NOTES:

(1 to 13) See General Notes Drawing FLEX20100, Sheet 1 & 2.
(A) Milestone Series 1000 Sliding Glass Door or is shown. Also applicable to Milestone Series 500 and 2000 Sliding Glass Door.
(B) Drawing applicable to Non-Impact Resistant Sliding Glass Doors glazed with fully tempered glass. See Note (V).
(C) Where "X" represents moving panel and "O" represents fixed panel, approved configurations are as listed on the fastener installation chart on Sheet 2.
(D) Not all configurations listed on the fastener chart are shown on this drawing, however installation sections "A-A", "B-B" & Hook Strip Detail apply to installation of all approved configurations.
(E) For pocket door configurations, use close-cast by-pass door size and configuration in the chart to the finished opening of the pocket door.
(F) Concrete screw edge distance measured from edge of concrete/masonry/block to centerline of concrete screw must meet or exceed 2 1/4". Minimum size and embedment per Parts List. See Note (J) regarding deviations.
(G) Wood or tapping screw edge distance measured from edge of wood receiving the point to centerline of wood or tapping screw must meet or exceed 1". Minimum size and embedment per Parts List. See Note (J) regarding deviations.
(H) All field supplied holes in the frame (if required) will be 3/16" in diameter.
(I) Wood screw withdrawal values used to generate the fastening requirements are based on Southern Pine with a Specific Gravity of 0.55. See Note (J) regarding deviations.
(J) Any deviation less than the minimum requirements stated must be approved by the manufacturer or engineered by "other" Design Professional in accordance with the applicable Building Code and Product Approval.

FASTENER INSTALLATION INSTRUCTIONS - FLEX24111

3/16" DIA. CONCRETE SCREW WITH SILL:

(K) Where door is installed in an opening with a masonry or concrete sill, use a 3/16" diameter concrete screw of sufficient length to achieve minimum embedment of 1-1/4" into masonry or concrete. See "Parts List" on Sheet 1 of this drawing for concrete screw size, embedment and load requirements. See FLEX20100, Note 7 for additional concrete screw requirements.
(L) See fastener installation chart this sheet for concrete screw quantities and additional installation requirements.
(M) Install one concrete screw in each pair of factory applied installation holes unless noted otherwise on the fastener installation chart.
(N) Alternate concrete screw installation fasteners front to back in all frame members when both sets of holes are not used.
(O) All remaining factory applied installation fastener holes in the sill not used for concrete screw installation shall be anchored with plastic anchors (see FLEX20100, Note 8.) for details) and #8 wood screws of sufficient length to provide min. 7/8" in. embedment into the concrete or masonry. See "Parts List" on Sheet 1 of this drawing for wood screw size and embedment requirements. See FLEX20100, Note 8 for additional wood screw requirements.

#8 WOOD SCREW WITH STRUCTURAL TWO BY WOOD BUCK FOR HEAD, JAMBS AND POCKET DOOR HOOK STRIP:

(P) Where the head, jamb and pocket door or hook strip is installed in a wood opening with a structural two by wood buck and/or framing, use #8 wood screws of sufficient length to achieve 1-1/8" minimum embedment into the two by wood buck and/or framing receiving the point. See "Parts List" on Sheet 1 of this drawing for wood screw size and embedment requirements. See FLEX20100, Note 8 for additional wood screw requirements.
(Q) See fastener installation chart this sheet for #8 wood screw requirements in hook strip.
(R) All remaining factory applied installation fastener holes in the head and jamb(s) not used for #8 wood screw with 1-1/8" embedment shall be fastened with #8 wood screws of sufficient length to provide min. 5/8" embedment into wood buck. See "Parts List" on Sheet 1 of this drawing for wood screw size and embedment requirements. See FLEX20100, Note 8 for additional wood screw requirements.
(S) Wood screws shall not be used to fasten door assembly into end grain of wood.

DESIGN PRESSURE RATING & FBC CODE COMPLIANCE

(T) If exact door size is not listed in fastener chart, use fastener quantity listed for next larger size, for the appropriate design pressure required.
(U) Installations depicted in these instructions are acceptable for design pressures to 70 PSF for the window sizes shown in the chart. Design Pressures (D.P.) are positive and negative. Overall window assembly design pressure may be less than that shown in the fastener quantity table and shall be determined in accordance with Note 13 of FLEX20100.
(V) Production Glazing may differ from that tested as allowed by ANSI/AAMA/NWWDA 101/I.S. 2 - 97 or 101/I.S. 2 NAFS and applicable Building Code. See Note 12 and 13 on FLEX20100 for further details.
(W) Two by wood and/or framing to be securely fastened to transfer the load to the masonry, concrete or other structural substrate per the FBC and the engineer of record's details as applicable.
(X) See FLEX20100, Notes 10 to 15 for additional FBC Code Compliance.

Florida Extruders Int'l, Inc. 2540 Jewett Lane - Sanford, FL 32771 407-323-3300 - 407-323-3307 (fax) www.floridaextruders.com Florida COA No. 9235

TITLE: Milestone Series 500, 1000, 1500, 1750, 2000 & 3000 Non-Impact Resistant Aluminum Flanger Frame Sliding Glass Door Installation Drawing for Concrete Sill Installation Using Concrete Screw Substitute w/Wood Screws

No.	Date	Description
0	12/27/06	Initial Release

Date: 12/27/06 Scale: NTS Drawn By: RJA Checked By: JH

Drawing No. FLEX24111
Sheet 2 of 2

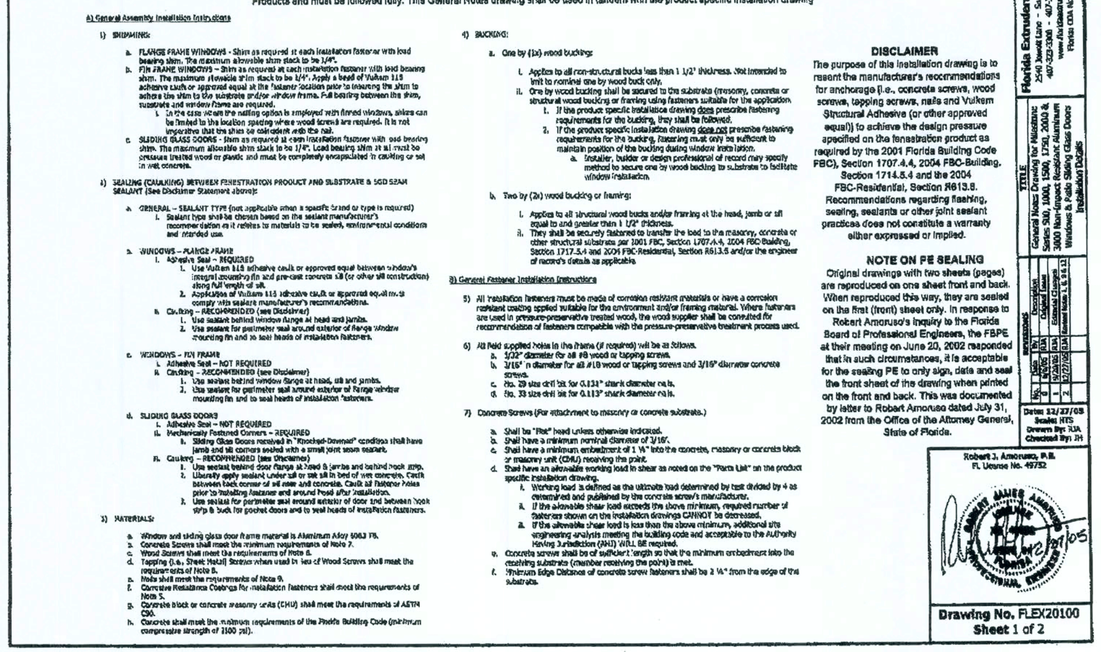

General Notes Drawing for Milestone Series 500, 1000, 1500, 1750, 2000 and 3000 Non-Impact Resistant Aluminum Window and Patio Sliding Glass Door Installation Details

These notes are provided to ensure proper installation of Florida Extruders Milestone Non-Impact Resistant Aluminum Fenestration Products and must be followed fully. This General Notes drawing shall be used in tandem with the product specific installation drawing

A) General Assembly Installation Instructions

1) SHIMMING:
a. FLANGE FRAME WINDOWS - Shim as required at each installation fastener with load bearing shim. The maximum allowable shim stack to be 1/4".
b. FIN FRAME WINDOWS – Shim as required at each installation fastener with load bearing shim. The maximum allowable shim stack to be 1/4". Apply a bead of Vulkem 116 adhesive caulk or approved equal at the fastener location prior to inserting the shim to adhere the shim to the substrate and/or window frame. Full bedding between the shim, substrate and window frame are required.
i. In the case where the nailing option is employed with finned windows, shims can be limited to the location spacing where wood screws are required. It is not imperative that the shim be coincident with the nail.
c. SLIDING GLASS DOORS - Shim as required at each installation fastener with load bearing shim. The maximum allowable shim stack to be 1/4". Load bearing shim in all cases must be pressure treated wood or plastic and must be completely encapsulated in caulking or set in wet concrete.

2) SEALING (CAULKING) BETWEEN FENESTRATION PRODUCT AND SUBSTRATE & SIDE SEAM SEALANT (See Disclaimer Statement above):
a. GENERAL – SEALANT TYPE (not applicable when a specific brand or type is required)
i. Sealant type shall be chosen based on the sealant manufacturer's recommendation as it relates to materials to be sealed, environmental conditions and intended use.
b. WINDOWS – FLANGE FRAME
i. Adhesive Seal – REQUIRED
1. Use Vulkem 116 adhesive caulk or approved equal between window's integral mounting fin and pre-cast concrete sill (or other sill construction) along full length of sill.
2. Application of Vulkem 116 adhesive caulk or approved equivalent must comply with sealant manufacturer's recommendations.
ii. Caulking – RECOMMENDED (see Disclaimer)
1. Use sealant behind window flange at head and jambs.
2. Use sealant for perimeter seal around exterior of flange window mounting fin and at seal heads of installation fasteners.
c. WINDOWS – FIN FRAME
i. Adhesive Seal – NOT REQUIRED
ii. Caulking – RECOMMENDED (see Disclaimer)
1. Use sealant behind window flange at head, sill and jambs.
2. Use sealant for perimeter seal around exterior of flange window mounting fin and at seal heads of installation fasteners.
d. SLIDING GLASS DOORS
i. Adhesive Seal – NOT REQUIRED
ii. Mechanically Fastened Corners – REQUIRED
1. Sliding Glass Doors received in "Knocked-Downed" condition shall have jamb and sill corners sealed with a small joint seam sealant.
iii. Caulking – RECOMMENDED (see Disclaimer)
1. Use sealant behind door flange at head & jambs and behind hook strip.
2. Liberally apply sealant under sill or set sill in bed of wet concrete. Caulk between hook corner of sill seam and concrete. Caulk all fastener holes prior to installing fastener and around head after installation.
3. Use sealant for perimeter seal around exterior of door and between hook strip & hook for pocket doors and to seal heads of installation fasteners.

3) MATERIALS:
a. Window and sliding glass door frame material is Aluminum Alloy 6063 T5.
b. Concrete Screws shall meet the minimum requirements of Note 7.
c. Wood Screws shall meet the requirements of Note 8.
d. Tapping (i.e., Sheet Metal) Screws when used in lieu of Wood Screws shall meet the requirements of Note 8.
e. Nails shall meet the requirements of Note 9.
f. Corrosive Resistance Coatings for installation fasteners shall meet the requirements of Note 5.
g. Concrete block or concrete masonry units (CMU) shall meet the requirements of ASTM C90.
h. Concrete shall meet the minimum requirements of the Florida Building Code (minimum compressive strength of 2500 psi).

4) BACKING:
a. One by (1x) wood backing:
i. Applies to all non-structural backs less than 1 1/2" thickness. Not intended to limit to nominal one by wood buck only.
ii. One by wood backing shall be secured to the substrate (masonry, concrete or structural wood backing or framing using fasteners suitable for the application.
1. If the product specific installation drawing does prescribe fastening requirements for the backing, they shall be followed.
2. If the product specific installation drawing does not prescribe fastening requirements for the backing, fastening must only be sufficient to maintain position of the backing during window installation.
a. Installer, builder or design professional of record may specify method to secure one by wood backing to substrate to facilitate window installation.
b. Two by (2x) wood backing or framing:
i. Applies to all structural wood backs and/or framing at the head, jamb or sill equal to and greater than 1 1/2" thickness.
ii. They shall be securely fastened to transfer the load to the masonry, concrete or other structural substrate per 2001 FBC, Section 1707.4.4, 2004 FBC-Building, Section 1717.5.4 and 2004 FBC-Residential, Section R613.6 and/or the engineer of record's details as applicable.

B) General Fastener Installation Instructions

5) All installation fasteners must be made of corrosion resistant materials or have a corrosion resistant coating applied suitable for the environment and/or framing material. Where fasteners are used in pressure-preservative treated wood, the wood supplier shall be consulted for recommendation of fasteners compatible with the pressure-preservative treatment process used.

6) All field supplied holes in the frame (if required) will be as follows.
a. 1/32" diameter for all #8 wood or tapping screws.
b. 3/16" in diameter for all #10 wood or tapping screws and 3/16" diameter concrete screws.
c. No. 29 size drill bit for 0.134" shank diameter nails.
d. No. 33 size drill bit for 0.113" shank diameter nails.

7) Concrete Screws (For attachment to masonry or concrete substrate.)
a. Shall be "Flat" head unless otherwise indicated.
b. Shall have a minimum nominal diameter of 3/16".
c. Shall have a minimum embedment of 1 ¼" into the concrete, masonry or concrete block or masonry unit (CMU) receiving the point.
d. Shall have an allowable working load in shear as noted on the "Parts List" on the product specific installation drawing.
i. Working load is defined as the ultimate load determined by test divided by 4 as determined and published by the concrete screw's manufacturer.
ii. If the allowable shear load exceeds the above minimum, required number of fasteners shown on the installation drawings CANNOT be decreased.
iii. If the allowable shear load is less than the above minimum, additional site engineering analysis meeting the building code and acceptable to the Authority Having Jurisdiction (AHJ) WILL BE required.
e. Concrete screw shall be of sufficient length so that the minimum embedment into the receiving substrate (member receiving the point) is met.
f. Minimum Edge Distance of concrete screw fasteners shall be 2 ¼" from the edge of the substrate.

DISCLAIMER

The purpose of this installation drawing is to present the manufacturer's recommendations for anchorage (i.e., concrete screws, wood screws, tapping screws, nails and Vulkem Structural Adhesive (or other approved equal)) to achieve the design pressure specified on the fenestration product as required by the 2001 Florida Building Code (FBC), Section 1707.4.4, 2004 FBC-Building, Section 1714.5.4 and the 2004 FBC-Residential, Section R613.8. Recommendations regarding flashing, sealing, sealants or other joint sealant practices does not constitute a warranty either expressed or implied.

NOTE ON PE SEALING

Original drawings with two sheets (pages) are reproduced on one sheet front and back. When reproduced this way, they are sealed on the first (front) sheet only. In response to Robert Amoruso's inquiry to the Florida Board of Professional Engineers, the FBPE at their meeting on June 20, 2002 responded that in such circumstances, it is acceptable for the sealing PE to only sign, date and seal the front sheet of the drawing when printed on the front and back. This was documented by letter to Robert Amoruso dated July 31, 2002 from the Office of the Attorney General, State of Florida.

Robert J. Amoruso, P.E.
FL License No. 49752

Florida Extruders Int'l, Inc. 2540 Jewett Lane - Sanford, FL 32771 407-323-3300 - 407-323-3307 (fax) www.floridaextruders.com Florida COA No. 9235

TITLE: General Notes Drawing for Milestone Series 500, 1000, 1500, 1750, 2000 & 3000 Non-Impact Resistant Aluminum Windows & Patio Sliding Glass Doors Installation Details

No.	Date	Description
0	12/27/06	Initial Release
1	6/14/07	Corrected Typos
2	8/24/09	Changed Notes 3, 5, 9 & 12
3	9/22/09	Added Note 13

Date: 12/27/06 Scale: NTS Drawn By: RJA Checked By: JH

Drawing No. FLEX20100
Sheet 1 of 2

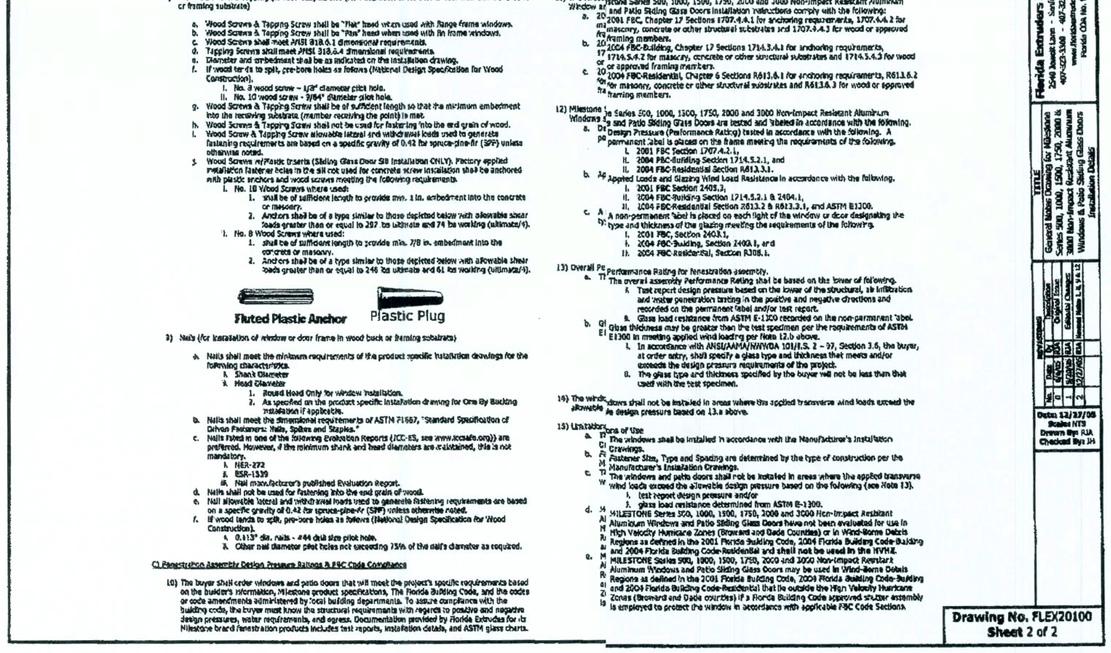

General Notes Drawing for Milestone Series 500, 1000, 1500, 1750, 2000 and 3000 Non-Impact Resistant Aluminum Window and Patio Sliding Glass Door Installation Details

3) Wood Screws and Tapping (Sheet Metal) Screws (for installation of window or door frame in wood buck or framing substrate)
a. Wood Screws & Tapping Screw shall be "Flat" head when used with flange frame windows.
b. Wood Screws & Tapping Screw shall be "Pan" head when used with fin frame windows.
c. Wood Screws shall meet ANSI B18.6.1 dimensional requirements.
d. Tapping Screws shall meet ANSI B18.6.4 dimensional requirements.
e. Diameter and embedment shall be as indicated on the installation drawing.
f. If wood tends to split, pre-bore holes as follows (National Design Specification for Wood Construction).
i. No. 8 wood screw - 1/32" diameter pilot hole.
ii. No. 10 wood screw - 3/64" diameter pilot hole.
g. Wood Screws & Tapping Screw shall be of sufficient length so that the minimum embedment into the receiving substrate (member receiving the point) is met.
h. Wood Screws & Tapping Screw shall not be used for fastening into the end grain of wood.
i. Wood Screw & Tapping Screw allowable lateral and withdrawal loads used to generate fastening requirements are based on a specific gravity of 0.42 for spruce-pine-fir (SPF) unless otherwise noted.
j. Wood Screws w/Plastic Inserts (Sliding Glass Door Sill Installation ONLY). Factory applied installation fastener holes in the sill not used for concrete screw installation shall be anchored with plastic anchors and wood screws meeting the following requirements.
i. No. 10 Wood Screws where used:
1. shall be of sufficient length to provide min. 1 in. embedment into the concrete or masonry.
2. Anchors shall be of a type similar to those depicted below with allowable shear loads greater than or equal to 237 lbs ultimate and 74 lbs working (ultimate/4).
ii. No. 8 Wood Screws where used:
1. shall be of sufficient length to provide min. 7/8 in. embedment into the concrete or masonry.
2. Anchors shall be of a type similar to those depicted below with allowable shear loads greater than or equal to 146 lbs ultimate and 61 lbs working (ultimate/4).

9) Nails (for installation of window or door frame in wood buck or framing substrate)
a. Nails shall meet the minimum requirements of the product specific installation drawings for the following characteristics.
i. Shank Diameter
ii. Head Diameter
1. Round Head Only for Window Installation.
2. As specified on the product specific installation drawing for Cmu Buck Buck Installation if applicable.
b. Nails shall meet the dimensional requirements of ASTM F1667, "Standard Specification of Driven Fasteners: Nails, Spikes and Staples."
c. Nails listed in one of the following Evaluation Reports (ICC-ES, see www.icc-es.org) are preferred. However, if the minimum shank and head diameters are maintained, this is not mandatory.
i. NER-272
ii. ESR-1539
iii. Nail manufacturer's published Evaluation Report.
d. Nails shall not be used for fastening into the end grain of wood.
e. Nail allowable lateral and withdrawal loads used to generate fastening requirements are based on a specific gravity of 0.42 for spruce-pine-fir (SPF) unless otherwise noted.
f. If wood tends to split, pre-bore holes as follows (National Design Specification for Wood Construction).
i. 0.113" dia. nails - #44 drill size pilot hole.
ii. Other nail diameter pilot holes not exceeding 75% of the nail's diameter as required.

C) Fenestration Assembly Design Pressure Rating & FBC Code Compliance

10) The buyer shall order windows and patio doors that will meet the project's specific requirements based on the builder's information, Milestone product specifications, The Florida Building Code, and the codes or code amendments administered by local building departments. To assure compliance with the building code, the buyer must know the structural requirements with regards to positive and negative design pressures, water requirements, and egress. Documentation provided by Florida Extruders for its Milestone brand fenestration products includes test reports, installation details, and ASTM glass charts.

11) The Milestone Series 500, 1000, 1500, 1750, 2000 and 3000 Non-Impact Resistant Aluminum Window and Patio Sliding Glass Doors installation instructions comply with the following:
a. 2001 FBC, Chapter 17 Sections 1707.4.4.1 for anchoring requirements, 1707.4.4.2 for masonry, concrete or other structural substrates and 1707.4.4.3 for wood or approved framing members.
b. 2004 FBC-Building, Chapter 17 Sections 1714.5.4.1 for anchoring requirements, 1714.5.4.2 for masonry, concrete or other structural substrates and 1714.5.4.3 for wood or approved framing members.
c. 2004 FBC-Residential, Chapter 6 Sections R613.6.1 for anchoring requirements, R613.6.2 for masonry, concrete or other structural substrates and R613.6.3 for wood or approved framing members.

12) Milestone Series 500, 1000, 1500, 1750, 2000 and 3000 Non-Impact Resistant Aluminum Windows and Patio Sliding Glass Doors are tested and labeled in accordance with the following.
a. Design Pressure (Performance Rating) tested in accordance with the following. A permanent label is placed on the frame meeting the requirements of the following.
i. 2001 FBC Section 1707.4.2.1.
ii. 2004 FBC-Building Section 1714.5.2.1, and
iii. 2004 FBC-Residential Section R613.3.1.
b. Applied Loads and Glazing Wind Load Resistance in accordance with the following.
i. 2001 FBC Section 2405.3,
ii. 2004 FBC-Building Section 1714.5.2.1 & 2404.1,
iii. 2004 FBC-Residential Section R613.3.2 & R613.3.1, and ASTM E1300.
c. A non-permanent label is placed on each light of the window or door designating the type and thickness of the glazing meeting the requirements of the following.
i. 2001 FBC, Section 2403.1,
ii. 2004 FBC-Building, Section 2403.1, and
iii. 2004 FBC-Residential, Section R308.1.

13) Overall Performance Rating for fenestration assembly.
a. The overall assembly Performance Rating shall be based on the lower of following.
i. Test report design pressure based on the lower of the structural, air infiltration and water penetration testing in the positive and negative directions and recorded on the permanent label and/or test report.
ii. Glass load resistance from ASTM E1300 recorded on the non-permanent label. Glass thickness may be greater than the test specimen per the requirements of ASTM E1300 in meeting applied wind loading per Note 12.b above.
i. In accordance with ANSI/AAMA/NWWDA 101/I.S. 2 - 97, Section 3.6, the buyer, at order entry, shall specify a glass type and thickness that meets and/or exceeds the design pressure requirements of the project.
ii. The glass type and thickness specified by the buyer will not be less than that used with the test specimen.

14) The windows shall not be installed in areas where the applied transverse wind loads exceed the allowable design pressure based on 13.a above.

15) Limitations of Use
a. The windows shall be installed in accordance with the Manufacturer's Installation Drawings.
b. Fastener Size, Type and Spacing are determined by the type of construction per the Manufacturer's Installation Drawings.
c. The windows and patio doors shall not be installed in areas where the applied transverse wind loads exceed the allowable design pressure based on the following (see Note 13).
i. test report design pressure and/or
ii. glass load resistance determined from ASTM E1300.
d. MILESTONE Series 500, 1000, 1500, 1750, 2000 and 3000 Non-Impact Resistant Aluminum Windows and Patio Sliding Glass Doors have not been evaluated for use in High Velocity Hurricane Zones (Broward and Dade Counties) or in Wind-Borne Debris Regions as defined in the 2001 Florida Building Code, 2004 Florida Building Code-Building and 2004 Florida Building Code-Residential and shall not be used in the HVHZ.
e. MILESTONE Series 500, 1000, 1500, 1750, 2000 and 3000 Non-Impact Resistant Aluminum Windows and Patio Sliding Glass Doors may be used in Wind-Borne Debris Regions as defined in the 2001 Florida Building Code, 2004 Florida Building Code-Building and 2004 Florida Building Code-Residential that lie outside the High Velocity Hurricane Zones (Broward and Dade counties) if a Florida Building Code approved shutter assembly is employed to protect the window in accordance with applicable FBC Code Sections.

Florida Extruders Int'l, Inc. 2540 Jewett Lane - Sanford, FL 32771 407-323-3300 - 407-323-3307 (fax) www.floridaextruders.com Florida COA No. 9235

TITLE: General Notes Drawing for Milestone Series 500, 1000, 1500, 1750, 2000 & 3000 Non-Impact Resistant Aluminum Windows & Patio Sliding Glass Doors Installation Details

No.	Date	Description
0	12/27/06	Initial Release
1	6/14/07	Corrected Typos
2	8/24/09	Changed Notes 3, 5, 9 & 12
3	9/22/09	Added Note 13

Date: 12/27/06 Scale: NTS Drawn By: RJA Checked By: JH

Drawing No. FLEX20100
Sheet 2 of 2

REVISIONS :

Maronda Homes
4005 MARONDA WAY SANFORD, FLORIDA (407) 321-0064

COPYRIGHT © 2002 MARONDA HOMES

FLORIDA EXTRUDERS
WINDOWS IN BLOCK
RELEASE DATE:

SHEET: 3 of 3

...\title_blocks\18x24-1252d.dgn Mar. 31, 2006 13:32:09

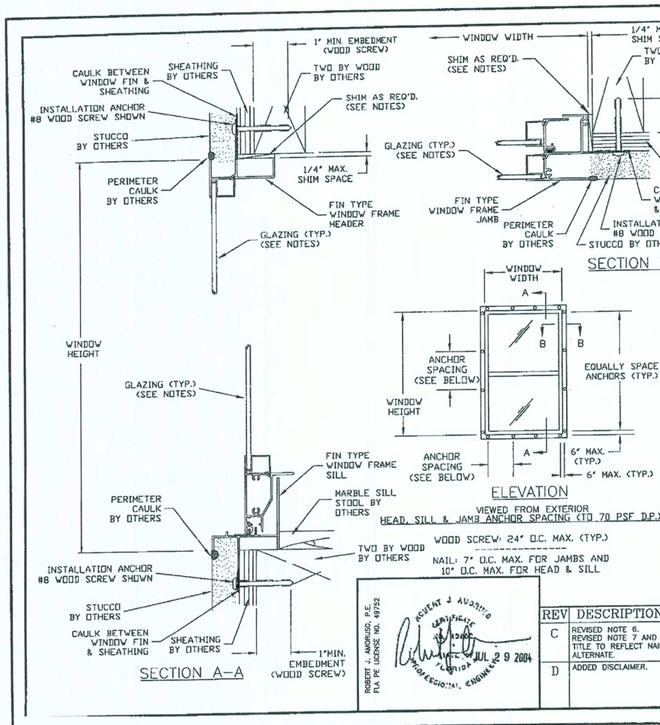

Disclaimer: The pose of this installation drawing is to present the manufacturer's recommendations for anchorage (i.e., wooc screws and nails) to achieve the design pressure specified on the fenestration product as required by Florida Building Code, Section 1707.4.4, Anchorage Methods. Recommendations regarding flashing, sealing, seals or other joint sealant practices does not constitute a warranty either expressed or implied.

IMPORTANINFORMATION & GENERAL NOTES

These notes are vided to ensure proper installation of Florida Extruders Milestone products and mbe followed fully.

GENERAL INSTAATION INSTRUCTIONS

1) SHIM AS REQAT EACH INSTALLATION ANCHOR WITH LOAD BEARING SHIM. MAX. ALLOWABSHIM STACK TO BE 1/4". APPLY A BEAD OF VULKEM 116 ADHESIVE CAUOR APPROVED EQUAL AT THE FASTENER LOCATION PRIOR TO INSERTING THEIM TO ADHERE THE SHIM TO THE SUBSTRATE AND/OR WINDOW FRAMFULL BEARING BETWEEN THE SHIM, SUBSTRATE AND WINDOW FRAME ARE REQRED.
2) USE SILICOND ACRYLIC CAULK BEHIND WINDOW FIN AT HEAD, SILL & JAMBS.
3) USE SILICOND ACRYLIC CAULK FOR PERIMETER SEAL AROUND EXTERIOR OF WINDOW FRAM
4) FLORIDA EXTDERS 1000 SERIES SINGLE HUNG IS SHOWN. THIS PRINT ALSO APPLIES TO THLORIDA EXTRUDERS 1500 AND 2000 SERIES SINGLE HUNGS.
5) WINDOW FRE MATERIAL: ALUMINUM ALLOY 6063.

ANCHOR INSTALLATION INSTRUCTIS

GENERAL:

6) ALL INSTALLATION ANCHORS MF BE MADE OF CORROSION RESISTANT MATERIALS OR HAVE A CORROSION RESISTANT COATING ALIED SUITABLE FOR THE ENVIRONMENT AND/OR FRAMING MATERIAL. WHERE ANCHORS ARE ED IN PRESSURE-PRESERVATIVE TREATED WOOD, THE WOOD SUPPLIER SHALL BE CONSULTED FRECOMMENDATION OF ANCHORS COMPATIBLE WITH THE PRESSURE-PRESERVATIVE TREATMT PROCESS USED.
7) ALL FIELD SUPPLIED HOLES IN T FRAME (IF REQUIRED) WILL BE:
   a) 3/16" IN DIAMETER FOR #8 WOD SCREWS, AND
   b) THE SHANK DIAMETER OF THAIL ROUNDED UP TO THE NEXT STANDARD DESIGNATION DRILL BIZI SIZI
8) WOOD SCREWS SHALL MEET ANB18.6.1 DIMENSIONAL REQUIREMENTS.
9) NAILS SHALL MEET ASTM F 166STANDARD SPECIFICATION FOR DRIVEN FASTENERS: NAILS, SPIKES, AND STAPLES."
10) IF WOOD TENDS TO SPLIT, PRIDRE HOLE AS FOLLOWS (PER NATIONAL DESIGN SPECIFICATION FOR WOOD CONSTRUCTION REQUMENTS):
   a) #8 WOOD SCREWS - 1/8" DPILOT HOLE.
   b) 0.113" DIA. NAILS - #44 DRISIZE PILOT HOLE.
   c) OTHER NAIL DIAMETER PILDOLES NOT EXCEEDING 75% OF THE NAIL'S DIAMETER AS REQUIRED.
11) WOOD SCREW AND NAIL WITHAWAL VALUES USED TO GENERATE FASTENING REQUIREMENTS ARE BASED ON SOUTHERN PINE WI A SPECIFIC GRAVITY OF 0.55.
12) WOOD SCREWS AND NAILS SHL NOT BE MIXED TO FASTEN THE SAME ASSEMBLY.
13) WOOD SCREWS AND NAILS SHL NOT BE USED TO FASTEN ASSEMBLY INTO THE END GRAIN OF WOOD.

[SEE SHEET 2 FOR CONTINUATION NOTES]

ROBERT J. AMORUSO, P.E.
FLA. PE LICENSE NO. 49752
ROBERT J. AMORUSO CERTIFICATE NO. 49752 STATE OF FLORIDA PROFESSIONAL ENGINEER
JUL 29 2004

REV	DESCRIPTION	DATE	INI
C	REVISED NOTE 6. REVISED NOTE 7 AND TITLE TO REFLECT NAIL ALTERNATE	12/10/03	RJA
D	ADDED DISCLAIMER.	7/29/04	RJA

FLORIDA EXTRUDERS INTERNATIONAL, INC. 2540 JEWETT LANE SANFORD, FLORIDA
CERTIFICATE OF AUTHORIZATION NO. 9235
TITLE: INSTAATION DETAIL W/#8 SCREWS OR NAILS
SINGLE ING FIN WINDOW - SERIES 1000, 1500, & 2000
DRAWN BY: B | APPROVED BY: RJA
DATE: 7/29/0 | SCALE: N. T. S. | DWG.:FLEX0026 SHT 1 OF 2

#8 WOOD SCREW INSTALLATION ANCHOR CHART

CALL SIZE	WINDOW SIZE	QUANTITY IN HEAD & SILL UP TO 70 PSF	QUANTITY IN EACH JAMB UP TO 70 PSF
2024	23 1/2 X 27 1/2	2	2
2030	23 1/2 X 35 1/2	2	3
2038	23 1/2 X 43 1/2	2	3
2040	23 1/2 X 47 1/2	2	3
2044	23 1/2 X 51 1/2	2	3
2050	23 1/2 X 59 1/2	2	4
2060	23 1/2 X 71 1/2	2	4
2070	23 1/2 X 83 1/2	2	4
2424	27 1/2 X 27 1/2	2	2
2430	27 1/2 X 35 1/2	2	3
2438	27 1/2 X 43 1/2	2	3
2440	27 1/2 X 47 1/2	2	3
2444	27 1/2 X 51 1/2	2	3
2450	27 1/2 X 59 1/2	2	4
2460	27 1/2 X 71 1/2	2	4
2470	27 1/2 X 83 1/2	2	4
2824	31 1/2 X 27 1/2	2	2
2830	31 1/2 X 35 1/2	2	3
2838	31 1/2 X 43 1/2	2	3
2840	31 1/2 X 47 1/2	2	3
2844	31 1/2 X 51 1/2	2	3
2850	31 1/2 X 59 1/2	2	4
2860	31 1/2 X 71 1/2	2	4
2870	31 1/2 X 83 1/2	2	4
3024	35 1/2 X 27 1/2	2	2
3030	35 1/2 X 35 1/2	2	3
3038	35 1/2 X 43 1/2	2	3
3040	35 1/2 X 47 1/2	2	3
3044	35 1/2 X 51 1/2	2	3
3050	35 1/2 X 59 1/2	2	4
3060	35 1/2 X 71 1/2	2	4
3070	35 1/2 X 83 1/2	2	4
3424	39 1/2 X 27 1/2	3	2
3430	39 1/2 X 35 1/2	3	3
3438	39 1/2 X 43 1/2	3	3
3440	39 1/2 X 47 1/2	3	3
3444	39 1/2 X 51 1/2	3	3
3450	39 1/2 X 59 1/2	3	4
3460	39 1/2 X 71 1/2	3	4
3470	39 1/2 X 83 1/2	3	4
3824	43 1/2 X 27 1/2	3	2
3830	43 1/2 X 35 1/2	3	3
3838	43 1/2 X 43 1/2	3	3
3840	43 1/2 X 47 1/2	3	3
3844	43 1/2 X 51 1/2	3	3
3850	43 1/2 X 59 1/2	3	4
3860	43 1/2 X 71 1/2	3	4
3870	43 1/2 X 83 1/2	3	4
4024	47 1/2 X 27 1/2	3	2
4030	47 1/2 X 35 1/2	3	3
4038	47 1/2 X 43 1/2	3	3
4040	47 1/2 X 47 1/2	3	3
4044	47 1/2 X 51 1/2	3	3
4050	47 1/2 X 59 1/2	3	4
4060	47 1/2 X 71 1/2	3	4
4070	47 1/2 X 83 1/2	3	4

#8 WOOD SCREW INSTALLATION ANCHOR CHART

CALL SIZE	WINDOW SIZE	QUANTITY IN HEAD & SILL UP TO 70 PSF	QUANTITY IN EACH JAMB UP TO 70 PSF
12	18 1/8 X 25	2	2
13	18 1/8 X 37 3/8	2	3
14	18 1/8 X 49 5/8	2	3
145	18 1/8 X 55 1/4	2	3
15	18 1/8 X 62	2	4
16	18 1/8 X 71	2	4
17	18 1/8 X 83	2	4
1H2	25 1/2 X 25	2	2
1H3	25 1/2 X 37 3/8	2	3
1H4	25 1/2 X 49 5/8	2	3
1H45	25 1/2 X 55 1/4	2	3
1H5	25 1/2 X 62	2	4
1H6	25 1/2 X 71	2	4
1H7	25 1/2 X 83	2	4
30 1/2 x 26	29 1/2 X 25	2	2
30 1/2 x 38 3/8	29 1/2 X 37 3/8	2	3
30 1/2 x 50 5/8	29 1/2 X 49 5/8	2	3
30 1/2 x 56 1/4	29 1/2 X 55 1/4	2	3
30 1/2 x 63	29 1/2 X 62	2	4
30 1/2 x 72	29 1/2 X 71	2	4
30 1/2 x 84	29 1/2 X 83	2	4
22	36 X 25	2	2
23	36 X 37 3/8	2	3
24	36 X 49 5/8	2	3
245	36 X 55 1/4	2	3
25	36 X 62	2	4
26	36 X 71	2	4
27	36 X 83	2	4
42 x 26	41 X 25	3	2
42 x 38 3/8	41 X 37 3/8	3	3
42 x 50 5/8	41 X 49 5/8	3	3
42 x 56 1/4	41 X 55 1/4	3	3
42 x 63	41 X 62	3	4
42 x 72	41 X 71	3	4
42 x 84	41 X 83	3	4
48 x 26	47 X 25	3	2
48 x 38 3/8	47 X 37 3/8	3	3
48 x 50 5/8	47 X 49 5/8	3	3
48 x 56 1/4	47 X 55 1/4	3	3
48 x 63	47 X 62	3	4
48 x 72	47 X 71	3	4
48 x 84	47 X 83	3	4
32	52 1/8 X 25	3	2
33	52 1/8 X 37 3/8	3	3
34	52 1/8 X 49 5/8	3	3
345	52 1/8 X 55 1/4	3	3
35	52 1/8 X 62	3	4
36	52 1/8 X 71	3	4
* 37	52 1/8 X 83	3	4

* 37 SIZE NOT AVAILABLE IN 1000 OR 1500 SERIES

IMPORTANT INFORMATION & GENERAL NOTES (cont.)

ANCHOR INSTALLATION INSTRUCTIONS (cont.)

#8 WOOD SCREWS:

14) SEE THIS SHEET FOR #8 WOOD SCREW INSTALLATION ANCHOR CHART.
15) #8 WOOD SCREW MUST BE OF SUFFICIENT LENGTH TO ACHIEVE MINIMUM EMBEDMENT OF 1" INTO THE TWO BY WOOD FRAMING.
16) SPACING OF WOOD SCREWS SHALL BE:
   a) 6" FROM EACH CORNER OF THE HEAD, SILL AND JAMBS, AND
   b) EVENLY SPACED BETWEEN CORNER ANCHORS BUT NOT EXCEEDING 24" O.C. SPACING IN HEAD, SILL AND JAMBS.

NAILS:

17) NAILS SHALL MEET THE FOLLOWING REQUIREMENTS:
   a) 0.113" DIAMETER OR GREATER,
   b) SUFFICIENT LENGTH TO ACHIEVE MINIMUM EMBEDMENT OF 1 7/8" INTO THE TWO BY WOOD FRAMING (GENERALLY, NAIL 2 3/8" LENGTH OR GREATER SHALL MEET THIS REQUIREMENT),
   c) HELICAL (SCREW) OR ANNULAR (RING) SHANK STYLE ONLY, AND
   d) MANUFACTURER SHALL BE LISTED IN NATIONAL EVALUATION SERVICES, INC.'S NATIONAL EVALUATION REPORT, NER-272.
18) MANUFACTURER'S NAILS MEETING THESE REQUIREMENTS ARE (BUT NOT LIMITED TO) THE FOLLOWING:
   a) PASLODE DEFORMED SHANK NAIL, NO. 404947, 404537, 650111 AND 650148.
   b) DURO-FAST DEFORMED SHANK NAIL NO. 325.
19) SPACING OF NAILS SHALL BE:
   a) 6" FROM EACH CORNER OF THE HEAD, SILL AND JAMBS, AND
   b) EVENLY SPACED BETWEEN CORNER ANCHORS AND NOT EXCEEDING 7" O.C. SPACING FOR THE JAMBS AND 10" O.C. SPACING FOR THE HEAD AND SILL.

DESIGN PRESSURE RATING & FBC REQUIREMENTS

20) IF EXACT WINDOW SIZE IS NOT LISTED IN WOOD SCREW ANCHOR CHART, USE ANCHOR QUANTITY LISTED FOR NEXT LARGER SIZE.
21) INSTALLATIONS DEPICTED IN THESE INSTRUCTIONS ACCEPTABLE FOR DESIGN PRESSURES TO 70 PSF FOR WINDOW SIZES SHOWN IN CHART WITH SPACINGS SHOWN. DESIGN PRESSURES (D.P.) SHOWN ARE POSITIVE AND NEGATIVE.
22) GLASS THICKNESS MAY VARY PER THE REQUIREMENTS OF ASTM E1300 GLASS CHARTS.
23) COMPLIES WITH CHAPTER 17 SECTIONS 1707.4.4.1 FOR ANCHORING REQUIREMENTS AND 1707.4.4.3 FOR WOOD OR APPROVED FRAMING MEMBERS, MARCH 1,2002.

REV	FLORIDA EXTRUDERS INTERNATIONAL, INC. 2540 JEWETT LANE SANFORD, FLORIDA
A	CERTIFICATE OF AUTHORIZATION NO. 9235
B	TITLE: INSTALLATION DETAIL W/#8 SCREWS OR NAILS
C	SINGLE HUNG FIN WINDOW - SERIES 1000, 1500, & 2000
D	DRAWN BY: BB / APPROVED BY: RJA
	DATE: 7/29/04 / SCALE: NTS / DWG.: FLEX0026 SHT 2 OF 2

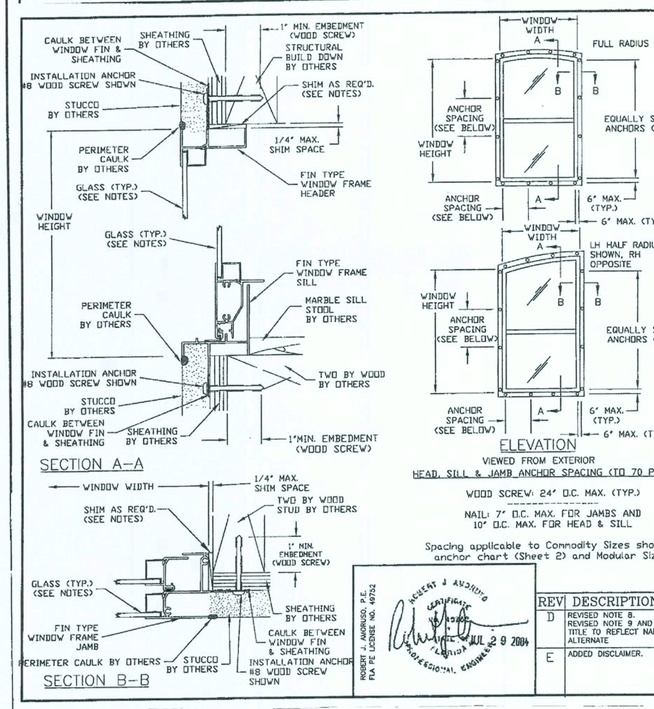

IMPORTANT INFRMATION & GENERAL NOTES

These notes are provided to ure proper installation of Florida Extruders Milestone products and must be followed fully.

GENERAL INSTALLATION INSUCTIONS

1) SHIM AS REQ'D. AT EACHSTALLATION ANCHOR WITH LOAD BEARING SHIM. MAX. ALLOWABLE SHIM STACK TO BE 1/4". AP A BEAD OF VULKEM 116 ADHESIVE CAULK OR APPROVED EQUAL AT THE FASTENER LOCATION PR TO INSERTING THE SHIM TO ADHERE THE SHIM TO THE SUBSTRATE ANDOR WINDOW FRAME. F BEARING BETWEEN THE SHIM, SUBSTRATE AND WINDOW FRAME ARE REQUIRED.
2) USE SILICONIZED ACRYLIAULK BEHIND WINDOW FIN AT HEAD, SILL & JAMBS.
3) USE SILICONIZED ACRYLIAULK FOR PERIMETER SEAL AROUND EXTERIOR OF WINDOW FRAME.
4) FLORIDA EXTRUDERS 1GGRIES SINGLE HUNG IS SHOWN. THIS PRINT ALSO APPLIES TO THE FLORIDA EXTRUDERS 1500) 2000 SERIES SINGLE HUNGS.
5) WINDOW FRAME MATERI ALUMINUM ALLOY 6063.
6) BUILD DOWN AROUND CTED PORTION OF WINDOW FRAME TO BE ENGINEERED BY OTHERS. BUILD DOWN MUST BE OF SFICIENT STRENGTH TO ADEQUATELY TRANSFER LOAD FROM WINDOW TO THE STRUCTURE PER FISECTION 1707.4.4.
7) WINDOW UNIT CAN BE KED TO OTHER UNITS USING ALUMINUM TUBE MULLION. SEE MULLION INSTALLATION SHEETS FORQUIREMENTS.

ANCHOR INSTALLATION INSCTIONS

GENERAL:

8) ALL INSTALLATION ANCHE MUST BE MADE OF CORROSION RESISTANT MATERIALS OR HAVE A CORROSION RESISTANT COANG APPLIED SUITABLE FOR THE ENVIRONMENT AND/OR FRAMING MATERIAL. WHERE ANCHORSE USED IN PRESSURE-PRESERVATIVE TREATED WOOD, THE WOOD SUPPLIER SHALL BE CONSULD FOR RECOMMENDATION OF ANCHORS COMPATIBLE WITH THE PRESSURE-PRESERVATIVE TIRMENT PROCESS USED.
9) ALL FIELD SUPPLIED HOLIN THE FRAME (IF REQUIRED) WILL BE:
   a) 3/16" IN DIAMETER FOR WOOD SCREWS, AND
   b) THE SHANK DIAMETER THE NAIL ROUNDED UP TO THE NEXT STANDARD DESIGNATION DRILL BIIZE.
10) WOOD SCREWS SHALL M ANSI B18.6.1 DIMENSIONAL REQUIREMENTS.
11) NAILS SHALL MEET ASTM667, "STANDARD SPECIFICATION FOR DRIVEN FASTENERS: NAILS, SPIKES, AND STAPLES."
12) IF WOOD TENDS TO SPLIRE-BORE HOLE AS FOLLOWS (PER NATIONAL DESIGN SPECIFICATION FOR WOOD CONSTRUCTION JUIREMENTS):
   a) #8 WOOD SCREWS - 1DIA. PILOT HOLE.
   b) 0.113" DIA. NAILS - #4RILL SIZE PILOT HOLE.
   c) OTHER NAIL DIAMETEILOT HOLES NOT EXCEEDING 75% OF THE NAIL'S DIAMETER AS REQUIR
13) WOOD SCREW AND NAILTHDRAWAL VALUES USED TO GENERATE FASTENING REQUIREMENTS ARE BASED ON SOUTHERN P WITH A SPECIFIC GRAVITY OF 0.55.
14) WOOD SCREWS AND NAISHALL NOT BE MIXED TO FASTEN THE SAME ASSEMBLY.
15) WOOD SCREWS AND NAISHALL NOT BE USED TO FASTEN ASSEMBLY INTO THE END GRAIN OF WOOD.

[SEE SHEET 2 FOR CONTINUON OF NOTES]

Disclaimer: The purpo of this installation drawing is to present the manufacturer's recommendations for chorage (i.e., wood screws and nails) to achieve the design pressure specified on the fenestration product as required by Florida Building Code, Section 1707.4.4, Anchorage Methods. Commendations regarding flashing, sealing, sealants or other joint sealant practices does not constitute a warranty either expressed or implied.

ROBERT J. AMORUSO, P.E.
FLA. PE LICENSE NO. 49752
ROBERT J. AMORUSO CERTIFICATE NO. 49752 STATE OF FLORIDA PROFESSIONAL ENGINEER
JUL 29 2004

REV	DESCRIPTION	DATE	INI
D	REVISED NOTE 8. REVISED NOTE 9 AND TITLE TO REFLECT NAIL ALTERNATE	12/10/03	RJA
E	ADDED DISCLAIMER.	7/29/04	RJA

FLORIA EXTRUDERS INTERNATIONAL, INC. 2540 JEWETT LANE SANFORD, FLORIDA
CERTIFICATE OF AIORIZATION NO. 9235
TITLE: INSTAATION DETAIL W/#8 SCREWS OR NAILS
SINGLE HUNRADIUS HEAD FIN - SERIES 1000, 1500, & 2000
DRAWN BY: J | APPROVED BY: RJA
DATE: 7/29/ | SCALE: N. T. S. | DWG.:FLEX0041 SHEET 1 OF 2

#8 WOOD SCREW INSTALLATION ANCHOR CHART

CALL SIZE	WINDOW SIZE	QUANTITY IN HEAD & SILL UP TO 70 PSF	QUANTITY IN EACH JAMB UP TO 70 PSF
12	18 1/8 X 27 5/16	2	2
13	18 1/8 X 39 11/16	2	3
14	18 1/8 X 51 15/16	2	3
145	18 1/8 X 57 19/32	2	4
15	18 1/8 X 64 5/16	2	4
16	18 1/8 X 73 5/16	2	4
1H2	25 1/2 X 28 9/16	2	2
1H3	25 1/2 X 40 15/16	2	3
1H4	25 1/2 X 53 3/16	2	3
1H45	25 1/2 X 58 13/16	2	4
1H5	25 1/2 X 65 9/16	2	4
1H6	25 1/2 X 74 9/16	2	4
29 1/2 X 29 7/32	29 1/2 X 29 7/32	2	2
29 1/2 X 41 19/32	29 1/2 X 41 19/32	2	3
29 1/2 X 53 27/32	29 1/2 X 53 27/32	2	3
29 1/2 X 59 15/32	29 1/2 X 59 15/32	2	4
29 1/2 X 66 7/32	29 1/2 X 66 7/32	2	4
29 1/2 X 75 7/32	29 1/2 X 75 7/32	2	4
22	36 X 30 5/16	2	2
23	36 X 42 11/16	2	3
24	36 X 54 15/16	2	3
245	36 X 60 9/16	2	3
25	36 X 67 5/16	2	4
26	36 X 76 5/16	2	4
41 X 31 5/32	41 X 31 5/32	3	2
41 X 43 17/32	41 X 43 17/32	3	3
41 X 55 25/32	41 X 55 25/32	3	3
41 X 61 3/8	41 X 61 3/8	3	3
41 X 68 5/32	41 X 68 5/32	3	4
41 X 77 5/32	41 X 77 5/32	3	4
47 X 32 5/32	47 X 32 5/32	3	2
47 X 44 17/32	47 X 44 17/32	3	3
47 X 56 25/32	47 X 56 25/32	3	3
47 X 62 3/8	47 X 62 3/8	3	3
47 X 69 5/32	47 X 69 5/32	3	4
47 X 78 5/32	47 X 78 5/32	3	4
32	52 1/8 X 33	3	2
33	52 1/8 X 45 3/8	3	3
34	52 1/8 X 57 5/8	3	3
345	52 1/8 X 63 1/4	3	3
35	52 1/8 X 70	3	4
36	52 1/8 X 79	3	4

INSTALLATION ANCHOR CHART NOTES:

1. Window sizes shown are for Commodity Size Windows.
2. Modular Size Windows will use the anchor quantities shown for the next larger sized Commodity Window.
3. Anchor spacing requirements for Commodity and Modular Size Windows shown on this sheet.
4. Dimensions given are for half radius head units, full radius will be shorter.

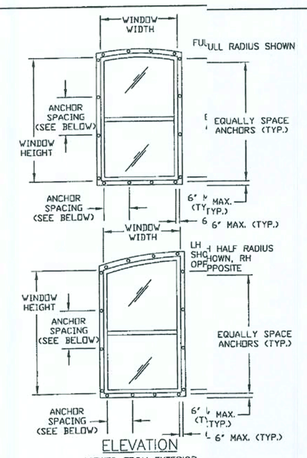

IMPORTANT INFORMATION & GENERAL NOTES (cont.)

ANCHOR INSTALLATION INSTRUCTIONS (cont.)

#8 WOOD SCREWS:

16) SEE THIS SHEET FOR #8 WOOD SCREW INSTALLATION ANCHOR CHART.
17) #8 WOOD SCREW MUST BE OF SUFFICIENT LENGTH TO ACHIEVE MINIMUM EMBEDMENT OF 1" INTO THE TWO BY WOOD BUCK OR BUILD-DOWN STRUCTURAL FRAMING COMPONENT.
18) SPACING OF WOOD SCREWS SHALL BE:
   a) 6" FROM EACH CORNER OF THE HEAD, SILL AND JAMBS, AND
   b) EVENLY SPACED BETWEEN CORNER ANCHORS BUT NOT EXCEEDING 24" O.C. SPACING IN HEAD, SILL AND JAMBS.

NAILS:

19) NAILS SHALL MEET THE FOLLOWING REQUIREMENTS:
   a) 0.113" DIAMETER OR GREATER,
   b) SUFFICIENT LENGTH TO ACHIEVE MINIMUM EMBEDMENT OF 1 7/8" INTO THE TWO BY WOOD BUCK OR BUILD-DOWN STRUCTURAL FRAMING COMPONENT(GENERALLY, NAIL 2 3/8" LENGTH OR GREATER SHALL MEET THIS REQUIREMENT),
   c) HELICAL (SCREW) OR ANNULAR (RING) SHANK STYLE ONLY, AND
   d) MANUFACTURER SHALL BE LISTED IN NATIONAL EVALUATION SERVICES, INC.'S NATIONAL EVALUATION REPORT, NER-272.
20) MANUFACTURER'S NAILS MEETING THESE REQUIREMENTS ARE (BUT NOT LIMITED TO) THE FOLLOWING:
   a) PASLODE DEFORMED SHANK NAIL, NO. 404947, 404537, 650111 AND 650148.
   b) DURO-FAST DEFORMED SHANK NAIL NO. 325.
21) SPACING OF NAILS SHALL BE:
   a) 6" FROM EACH CORNER OF THE HEAD, SILL AND JAMBS, AND
   b) EVENLY SPACED BETWEEN CORNER ANCHORS AND NOT EXCEEDING 7" O.C. SPACING FOR THE JAMBS AND 10" O.C. SPACING FOR THE HEAD AND SILL.

DESIGN PRESSURE RATING & FBC REQUIREMENTS

22) IF EXACT WINDOW SIZE IS NOT LISTED IN WOOD SCREW ANCHOR CHART, USE ANCHOR QUANTITY LISTED FOR NEXT LARGER SIZE.
23) INSTALLATIONS DEPICTED IN THESE INSTRUCTIONS ACCEPTABLE FOR DESIGN PRESSURES TO 70 PSF FOR WINDOW SIZES SHOWN IN CHART WITH SPACINGS SHOWN. DESIGN PRESSURES (D.P.) SHOWN ARE POSITIVE AND NEGATIVE.
24) GLASS THICKNESS MAY VARY PER THE REQUIREMENTS OF ASTM E1300 GLASS CHARTS.
25) COMPLIES WITH CHAPTER 17 SECTIONS 1707.4.4.1 FOR ANCHORING REQUIREMENTS AND 1707.4.4.3 FOR WOOD OR APPROVED FRAMING MEMBERS, MARCH 1, 2002.

REV	FLORIDA EXTRUDERS INTERNATIONAL, INC. 2540 JEWETT LANE SANFORD, FLORIDA
B	CERTIFICATE OF AUTHORIZATION NO. 9235
C	TITLE: INSTALLATION DETAIL W/#8 SCREWS OR NAILS
D	SINGLE HUNG RADIUS HEAD FIN - SERIES 1000, 1500, & 2000
E	DRAWN BY: RJA / APPROVED BY: RJA
	DATE: 7/29/04 / SCALE: N. T. S. / DWG.: FLEX0041 SHEET 2 OF 2

REVISIONS :

COPYRIGHT © 2002 MARONDA HOMES

Maronda Homes
4005 MARONDA WAY SANFORD, FLORIDA
(407) 321-0064

FLORIDA EXTRUDERS
WINDOWS IN FRAME

RELEASE DATE:

SHEET:
1 of 3

c:\pasteuptitle.dgn Apr. 03, 2006 09:10:46

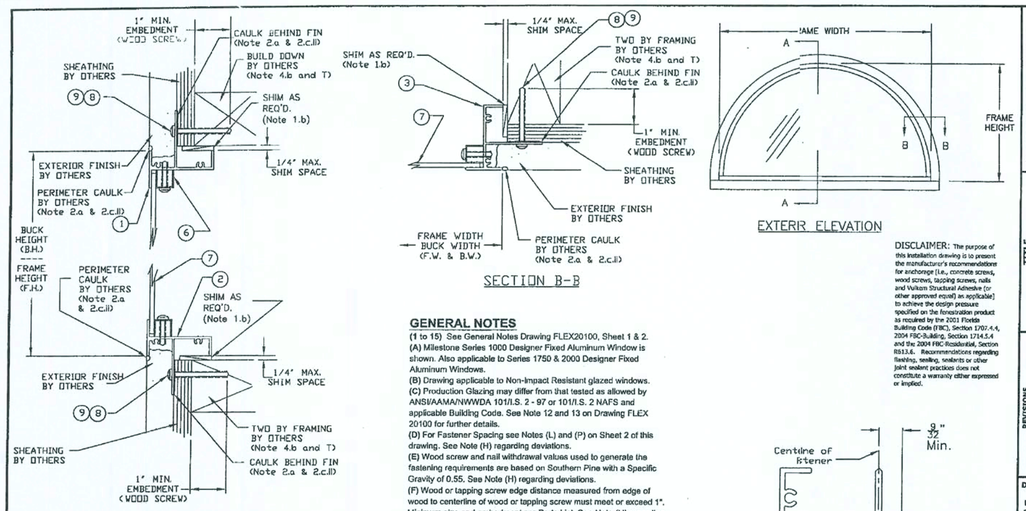

PARTS LIST

1 Head - FinFrame
2 Sill - Fin Frame
3 Jamb - Fin Frame
4 Not Used
5 Not Used
6 Glazing Bead - Rigid Vinyl
7 Glazing - See Note (B) and (C)
8 #8 Wood or Tapping Screw with a minimum embedment of 1" into the structural wood substrate. See Note (K) and Detail A on this drawing and Note 4.b & 8 on Drawing FLEX20100.
9 Round Head Deformed Shank Nail with minimum 0.113" diameter (11 GA) and minimum embedment of 1-7/8" into the structural wood substrate. See Note (N) and Detail A on this drawing and Notes 4.b & 9 on Drawing FLEX20100.

GENERAL NOTES

(1 to 15) See General Notes Drawing FLEX20100, Sheet 1 & 2.
(A) Milestone Series 1000 Designer Fixed Aluminum Window is shown. Also applicable to Series 1750 & 2000 Designer Fixed Aluminum Windows.
(B) Drawing applicable to Non-Impact Resistant glazed windows.
(C) Production Glazing may differ from that tested as allowed by ANSI/AAMA/NWWDA 101/I.S. 2 - 97 or 101/I.S. 2 NAFS and applicable Building Code. See Note 12 and 13 on Drawing FLEX 20100 for further details.
(D) For Fastener Spacing see Notes (L) and (P) on Sheet 2 of this drawing. See Note (H) regarding deviations.
(E) Wood screw and nail withdrawal values used to generate the fastening requirements are based on Southern Pine with a Specific Gravity of 0.55. See Note (H) regarding deviations.
(F) Wood or tapping screw edge distance measured from edge of wood to centerline of wood or tapping screw must meet or exceed 1". Minimum size and embedment per Parts List. See Note (H) regarding deviations.
(G) Nail edge distance measured from edge of wood to centerline of nail must meet or exceed 9/16" or 5 times Shank Diameter, whichever is larger. Minimum size and embedment per Parts List. See Note (H) regarding deviations.
(H) Any deviation less than the minimum requirements stated must be approved by the manufacturer or engineered by "other" Design Professional in accordance with the applicable Building Code and Product Approval.
(I) All field supplied holes in the frame (if required) will be 3/16" in diameter for #8 wood screws or the shank diameter of the nail rounded up to the next standard designation drill bit size.
(J) Wood Screws and Nails SHALL NOT be mixed to fasten the same assembly.

DISCLAIMER: The purpose of this installation drawing is to present the manufacturer's recommendations for anchorage [i.e., concrete screws, wood screws, lagging screws, nails and Vulkem Structural Adhesive (or other approved equal) as applicable] to achieve the design pressures specified on the fenestration product as required by the 2001 Florida Building Code (FBC), Section 1707.4.4, 2004 FBC-Building, Section 1714.5.4 and the 2004 FBC-Residential, Section R613.6. Recommendations regarding flashing, sealing, sealants or other joint sealant practices does not constitute a warranty either expressed or implied.

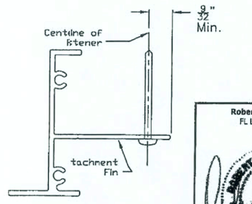

DETAIL A

Robert J. Amoruso, P.E.
FL License No. 49752

Drawing No. FLEX28120
Sheet 1 of 2

Florida Extruders Int'l, Inc.
2540 Jewett Lane - Sanford, FL 32771
407-323-3300 - 407-323-3607 (fax)
www.floridaextruders.com
Florida COA No. 9235

TITLE: Milestone Series 1000 & 2000 Non-Impact Resistant Aluminum Fin Frame Designer Fixed Window Installation Drawing for Wood Substrate with Wood Screws or Nails

REVISIONS: No. 0 Date 12/27/05 By RJA Description Submitted to FLDOBCT

Date: 12/27/05
Scale: NTS
Drawn By: RJA
Checked By: JH

FASTENER INSTALLATION INSTRUCTIONS - FLEX28120

#8 WOOD SCREWS:

(K) #8 Wood Screw must be of sufficient length to achieve minimum embedment of 1" into the two by wood framing or the build-down framing component.
(L) #8 Wood Screw spacing shall be as follows:
- 6" maximum from each corner of head, sill or jambs, and
- evenly spaced between corner fasteners but not exceeding 24" o.c. spacing in head, sill or jambs for the following configurations at design pressures to 70 PSF:
  - eyebrow
  - half-circle arch
  - half-eyebrow
  - octagon
  - fan
  - pentoid
  - full-circle
  - half-circle
  - triangle
  - trapezoid
  - oval
- evenly spaced between corner fasteners but not exceeding 16" o.c. spacing in head, sill or jambs for the following configurations at design pressures to 70 PSF:
  - quarter-circle
  - quarter-circle arch
  - half-fan

(M) Wood screws shall not be used to fasten assembly into end grain of wood.

NAILS:

(N) Nails shall meet the following requirements:
- 0.113" diameter or greater,
- sufficient length to achieve minimum embedment of 1 7/8" into the two by wood or build-down framing (generally, nail 2 3/8" length or greater shall meet this requirement), and
- helical (screw) or annular (ring) shank style only.

(O) Manufacturer's nails meeting these requirements are (but not limited to) the following:
- Paslode deformed shank nail, No. 404947, 404537, 650111 and 650148.
- Duro-Fast deformed shank nail No. 325.

(P) Spacing of nails shall be:
- 6" from each corner of the head, sill and jambs, and
- evenly spaced between corner fasteners but not exceeding the o.c. spacing in head, sill and jambs for the following configurations at design pressures 46 to 70 PSF:

eyebrow	7" o.c. spacing
half-eyebrow	7" o.c. spacing
fan	7" o.c. spacing
half-fan	5" o.c. spacing
full-circle	9" o.c. spacing
half-circle	7" o.c. spacing
half-circle arch	7" o.c. spacing
quarter-circle	5" o.c. spacing
quarter-circle arch	5" o.c. spacing
oval	15" o.c. spacing
octagon	9" o.c. spacing
pentoid	7" o.c. spacing
triangle	7" o.c. spacing
trapezoid	7" o.c. spacing

(P) Spacing of nails shall be (continued):
- evenly spaced between corner fasteners but not exceeding the o.c. spacing in head, sill and jambs for the following configurations at design pressures to 45 PSF:

eyebrow	12" o.c. spacing
half-eyebrow	12" o.c. spacing
fan	11" o.c. spacing
half-fan	8" o.c. spacing
full-circle	14" o.c. spacing
half-circle	11" o.c. spacing
half-circle arch	12" o.c. spacing
quarter-circle	8" o.c. spacing
quarter-circle arch	8" o.c. spacing
oval	24" o.c. spacing
octagon	14" o.c. spacing
pentoid	12" o.c. spacing
triangle	12" o.c. spacing
trapezoid	12" o.c. spacing

(Q) Nails shall not be used to fasten assembly into end grain of wood

DESIGN PRESSURE RATING & FBC CODE COMPLIANCE

(R) Installations depicted in these instructions acceptable for design pressures to 70 PSF with fastener spacing in Notes (L) and (P). Design Pressures (D.P.) are positive and negative. Overall window assembly design pressure may be less than 70 PSF and shall be determined in accordance with Note 13 of FLEX20100.
(S) Production Glazing may differ from that tested as allowed by ANSI/AAMA/NWWDA 101/I.S. 2 - 97 or 101/I.S. 2 NAFS and applicable Building Code. See Note 12 and 13 on Drawing FLEX 20100 for further details.
(T) Structural two by wood and/or framing at the head, sill and jambs to be securely fastened to transfer the load to the wood structural substrate per the FBC and the engineer of record's details as applicable.
(U) See FLEX20100, Notes 10 to 15 for additional FBC Code Compliance.

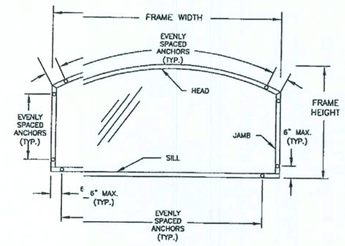

EXTERIOR ELEVATION

ANCHOR SPACING ILLUSTRATION
EYEBROW ARCH DESIGNER WINDOW

Drawing No. FLEX28120
Sheet 2 of 2

Florida Extruders Int'l, Inc.
2540 Jewett Lane - Sanford, FL 32771
407-323-3300 - 407-323-3607 (fax)
www.floridaextruders.com
Florida COA No. 9235

TITLE: Milestone Series 1000 & 2000 Non-Impact Resistant Aluminum Fin Frame Designer Fixed Window Installation Drawing for Wood Substrate with Wood Screws or Nails

REVISIONS: No. 0 Date 12/27/05 By RJA Description Submitted to FLDOBCT

Date: 12/27/05
Scale: NTS
Drawn By: RJA
Checked By: JH

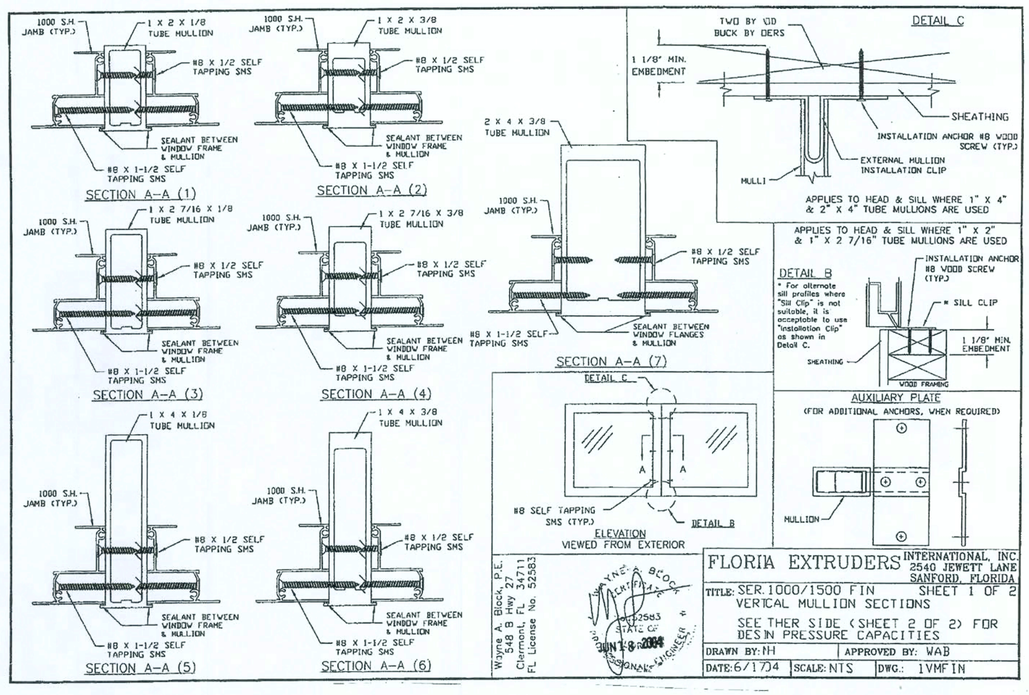

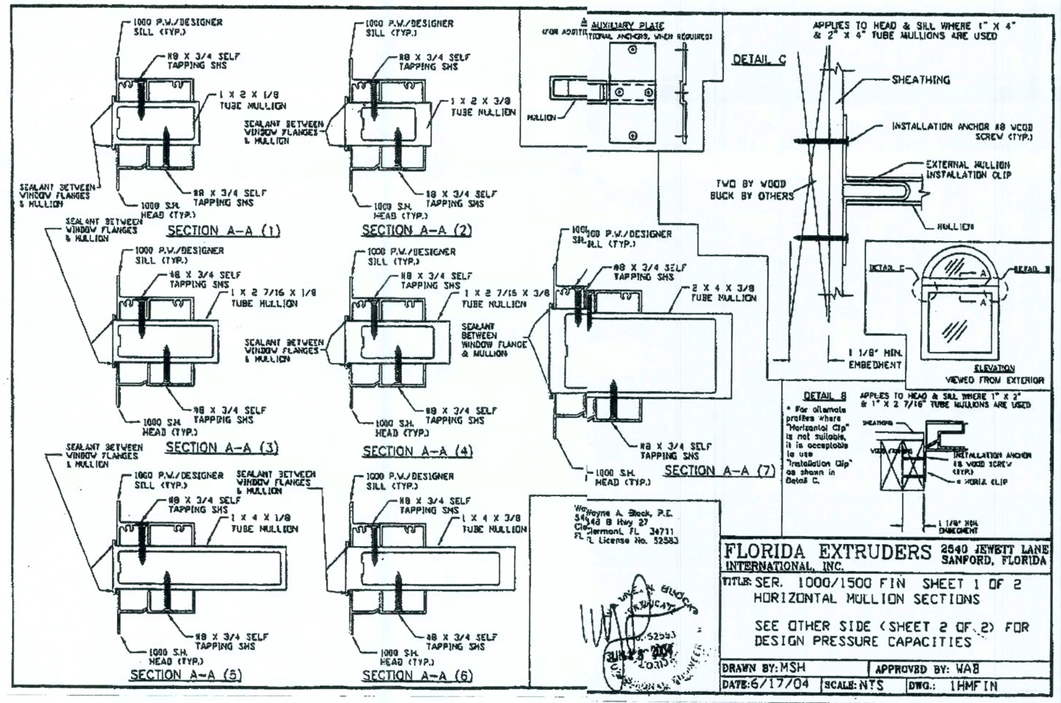

REVISIONS :

COPYRIGHT © 2002 MARONDA HOMES

Maronda Homes
(407) 321-0064 4005 MARONDA WAY SANFORD, FLORIDA

FLORIDA EXTRUDERS
WINDOWS IN FRAME

RELEASE DATE:

SHEET:
2 of 3

c:\pasteuptitle.dgn Apr. 03, 2006 09:11:03

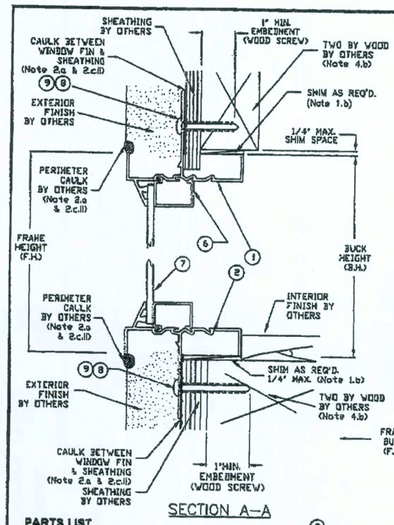

SECTION A–A

GENERAL NOTES

(1 to 13) See General Notes Drawing FLEX20100, Sheet 1 & 2.

(A) Milestone Series 2000 Fixed Aluminum Window is shown. Also applicable to Series 1000 Fixed Aluminum Windows.

(B) Drawing applicable to Non-Impact Resistant glazed windows.

(C) Production Glazing may differ from that tested as allowed by ANSI/AAMA/NWWDA 101/I.S. 2 - 97 or 101/I.S. 2 NAFS and applicable Building Code. See Note 12 and 13 on Drawing FLEX 20100 for further details.

(D) For Fastener Spacing see Elevation View on Sheet 1 and Notes (L) & (P) on Sheet 2 of this drawing. See Note (H) regarding deviations.

(E) Wood screw and nail withdrawal values used to generate the fastening requirements are based on Southern Pine with a Specific Gravity of 0.55. See Note (H) regarding deviations.

(F) Wood or tapping screw edge distance measured from edge of wood to centerline of wood or tapping screw must meet or exceed 1". Minimum size and embedment per Parts List. See Note (H) regarding deviations.

(G) Nail edge distance measured from edge of wood to centerline of nail must meet or exceed 9/16" or 5 times Shank Diameter, whichever is larger. Minimum size and embedment per Parts List. See Note (H) regarding deviations.

(H) Any deviation less than the minimum requirements stated must be approved by the manufacturer or engineered by "other" Design Professional in accordance with the applicable Building Code and Product Approval.

(I) All field supplied holes in the frame (if required) will be 3/16" in diameter for #8 wood screws or the shank diameter of the nail rounded up to the next standard designation drill bit size.

(J) Wood Screws and Nails SHALL NOT be mixed to fasten the same assembly.

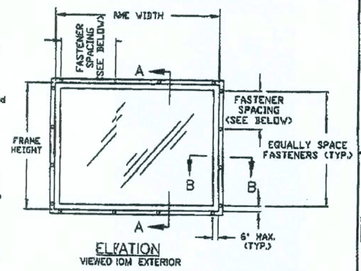

ELEVATION
VIEWED FROM EXTERIOR

HEAD, SILL & JAMB ANCHOR SPACING

WOOD SCREW - 100 PSF D.P.: 24" O.C. MAX.

NAIL - 46 PSF TO 75 PSF D.P.: 7" O.C. MAX.
NAIL - 76 TO 45 SF D.P.: 10" O.C. MAX.

DISCLAIMER: The purpose of this installation drawing is to present the manufacturer's recommendations for anchorage (i.e., screws, nailers, wood screws, lagging screws, nails and Vulkem Structural Adhesive (or other approved equal) as applicable) to achieve the design pressure specified on the fenestration product as required by the 2001 Florida Building Code (FBC), Section 1709.4-4, 2004 FBC-Building, Section 1709.5.4 and the 2004 FBC-Residential, Section R613.5. Recommendations regarding flashing, sealing, sealants or other joint sealant practices does not constitute a warranty either expressed or implied.

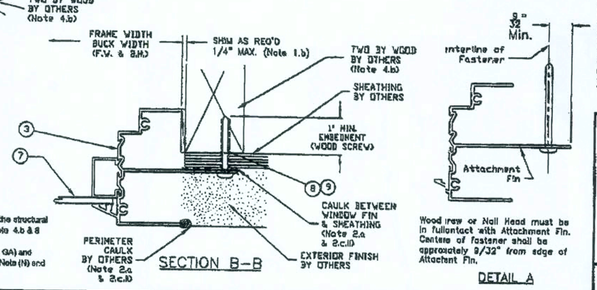

SECTION B–B

Wood screw or Nail Head must be in fullcontact with Attachment Fin. Centers of fastener shall be approximately 3/32" from edge of Attachment Fin.

DETAIL A

PARTS LIST

1. Head - FinFrame
2. Sill - Fin Frame
3. Jamb - Fin Frame
4. Not Used
5. Not Used
6. Glazing Bead - Rigid Vinyl
7. Glazing - See Note (B) and (C).
8. #8 Wood or Tapping Screw with a minimum embedment of 1" into the structural wood substrate. See Note (K) and Detail A on this drawing and Note 4.b & 8 on Drawing FLEX20100.
9. Round Head Deformed Shank Nail with minimum 0.113" diameter (11 GA) and minimum embedment of 1-7/8" into the structural wood substrate. See Note (N) and Detail A on this drawing and Notes 4.b & 9 on Drawing FLEX20100.

Florida Extruders Int'l, Inc.
Post Office Box 1-3-1 - Sanford, FL 32771
407-323-3330 - 407-323-3307 (fax)
www.floridaextruders.com
Florida CGC No. 1525

TITLE
Milestone Series 1000 & 2000
Non-Impact Resistant Aluminum Fin Frame
Installation Drawing for Wood Substrates with Wood Screws or Nails

Rev.	Date	Description
1	12/27/06	Submitted to Sanford

Date: 12/27/06
Scale: NTS
Drawn By: RJA
Checked By: JH

Robert J. Adamuco, P.E.
FL License No. 49752

Drawing No. FLEX27120
Sheet 1 of 2

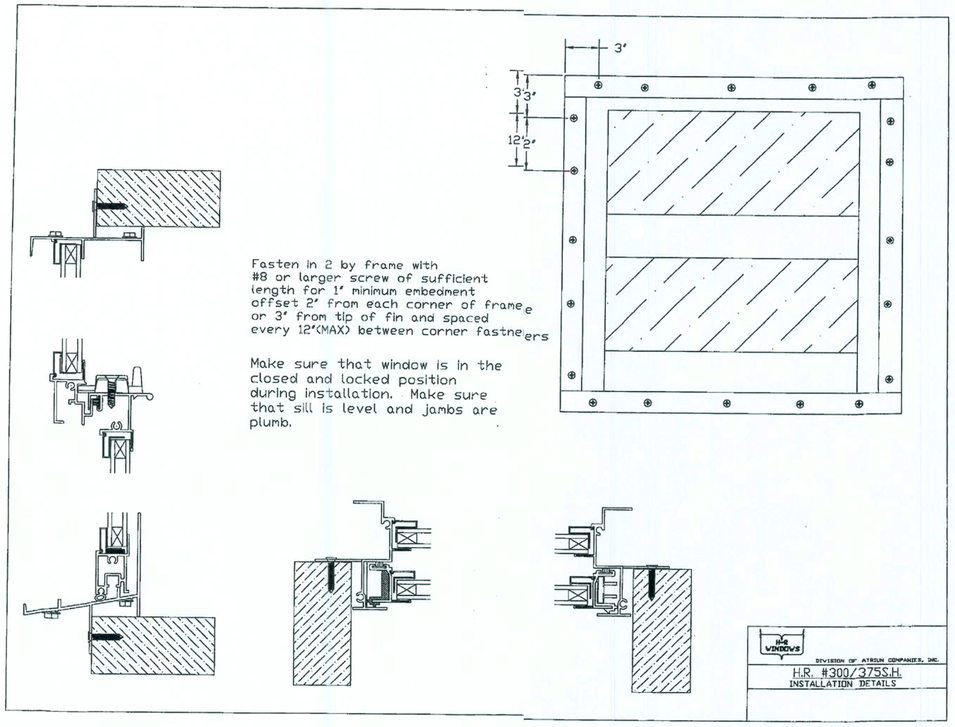

DIVISION OF ATRIUM COMPANIES, INC.
H.R. #300/375S.H.
INSTALLATION DETAILS

REVISIONS :

COPYRIGHT © 2002 MARONDA HOMES

Maronda Homes
(407) 321-0064 4005 MARONDA WAY SANFORD, FLORIDA

FLORIDA EXTRUDERS
WINDOWS IN FRAME

RELEASE DATE:

$DATE$ $TIME$ $FILE$

SHEET:
3 of 3

c:\fla-extrud.dgn Sep. 01, 2006 09:32:39

PRODUCT APPROVAL INFORMATION SHEET FOR FLORID/

Project Name:_____ **Permit #**_____

Project Address:_____

As required by Florida Statute 553.842 and Florida Administrative Code 9B-72, please provide the informati and product approval number(s) for the building components listed below as applicable to the building construction project for the permit nuner listed above. You should contact your product supplier if you do not know the product approval number for any of the applicable listeproducts. Information regarding statewide product approval may be obtained at: www.floridabuilding.org.

Category/Subcategory	Manufacturer	Product Description	Limitation of Use	State #	Design Pressures
A. EXTERIOR DOORS					
1. Swinging	Plastpro Inc.	Fiberglass Doors	Evaluated for use in locatio adhering to the Florida Buiing Code and where pressure requirements as determinedy ACSE 7 Minimum Design ıads for Building and Other Struures.	FL 6729.1 FL 6729.5	+50 / -50 +50 / -50
2. Sliding	Simonton / Norandex Florida Extruders	Sliding Glass Doors	500 72X80 SGD-R45 Milestone 1000 SGD	FL 5350.1 FL 45.1	+45 / -45 +45 / -45
3. Sectional					
4. Roll up	Wayne Dalton	Garage Doors 130 16' 8000 & 8100 8' Garage Doors 140 16' 8000 &8100 8'	As indicated in evaluation ɔort and installation drawings. ɔt to be used in HVHZ.	FL 22.4 FL 22.2 FL 4965.47 FL 22.5	+27.0 /- 29.0 +29.3 / -29.3 +34.4 / -38.3 +37.0 / -37.0
B. WINDOWS					
1. Single hung	H –R Windows Danvid Window Co Florida Extruders	300 Fin Single Hung 341 Flange Frame S.H. Milestone 1000 S.H.	40-17 72x74 H-R45	FL5089.1 FL 2751.1 FL 42.1	+45 / -45 +55 / -55 +45 / -45
2. Horizontal slider					
3. Casement					
4. Double hung					
5. Fixed	H –R Windows Danvid Window Co Florida Extruders	301 Fin Frame Fixed 341 Flange Frame Fixed Milestone 1000 Fixed	437-438 111 x 63 F-C6t/16 Tempered Glas Flange & Fin	FL 1291.2 FL 2349.1 FL 44.1	+55 / -55 +70 / -70 +45 / -45

Category/Subcategory	Manufacturer	Product Description	Limitation of Use	State #	Design Pressures
7. Pass-through					
8. Projected					
9. Mullion	H –R Windows Florida Extruders	Mullions Milestone Tube Mull Fin Or Flange	Evaluated for use in locatis adhering to the Florida Buiing Code and where pressure requirements as determineay ACSE 7 Minimum Designoads for Building and Other Strtures.	FL 5782 FL 3136–R2	+45 / -45
10. Wind breaker					
11. Dual action					
12. Other					
C. PANEL WALL					
1. Siding	Owens Corning	Easy Street Dbl 4.5 Dutch Lap	This Evalution is not for u within the FBC HVHZ or Educational Facilities with the State of Florida. Vinyl sidg is limited to Type V construon , as defined below. Section 60 – TYPE V CONSTRUCTIO Type V construction is that type construction in which the structural elements, exterioıwalls and interior Walls are of a material permitted by this de. Compliance is valid only ihe subject profile trade name current on the VSI Vinyl Sing f Certifiction Program.	FL 920.13	+53 / -53
2. Soffit	Alsco Metal Corp	16" Vented Soffit Quad 4 Aluminum Soffit	For use as soffit only. Not r use in HVHZ. Installations shemeet the minimum ventilation requirements of FBC Secti 1203.2 and AAMA 1402-l Section 3.1.1.4.	FL 4459-R1	46.71 PSF

Category/Subcategory	Manufacturer	Product Description	Limitation of Use	State #	Design Pressures
D. ROOFING PRODUCTS					
1. Asphalt shingles	Owens Corning	Asphalt Shingle Ridge Vents Galvanized metal roof vents.	This Approval not for use the HVHZ. All FBC sections at apply to counties except Bward and Miami-Dade Must be followed.	FL 3663 FL 234 FL5289	
2. Underlayments					
3. Roofing fasteners					
4. Nonstructural metal roof					
5. Built-up roofing					
6. Modified bitumen					
7. Single ply roofing					
8. Roofing tiles					
9. Roofing insulation					
10. Waterproofing					
11. Wood shingles/shakes					
12. Roofing slate					
13. Liquid applied roofing					
14. Cement-adhesive coats					
15. Roof tile adhesive					
16. Spray applied polyurethane roof					
17. Other					

Category/Subcategory	Manufacturer	Product Description	Limitation of Use	State #	Design Pressures
E. SHUTTERS					
1. Storm Panels	Atrium Shutters, Inc.	5L Panel Galv. Stl Strom	This product may only be installed on concrete, hollow concrete block or wood substrates. This product is NOT suitable for installation in the High Velocity Hurricane Zone.	FL 5547	50 PSF
F. STRUCTURAL COMPONENTS					
1. Wood connector/anchor	United Steel Products	Anchors, Hanges< Etc. Structural Components Wood Connectors	Subject to limitation and installation instructions specified in NOA 05-0105.05.	FL..-R1, 565, 569, 572, 576, 815, 816, 817, 818, 819, 820. 821, 822, 859, 1247, 1777, 2033, 2620, 3923, 4928, 5631, 6223	
2. Truss plates	Mitek Industries Inc.	Truss Connectors	No Limitation of Use.	FL 2197 R1	
3. Engineered lumber					
4. Railing					
5. Coolers-freezers					
6. Concrete admixtures					
7. Material					
8. Insulation forms					
9. Plastics					
10. Deck-roof					
11. Wall					
12. Sheds					
13. Other					

Category/Subcategory	Manufacturer	Product Description	Limitation of Use	State #	Design Pressures
G. SKYLIGHTS					
1. Skylight					
2. Other					
H. NEW EXTERIOR ENVELOPE PRODUCTS					
1.					
2.					

In addition to completing the above list of manufacturers, product description and S State approval number for the products used on this project, it is the Contractor's or Authorized Agent's responsibility to have a legible copy of ea each manufacturer's printed instructions, along with the list above, on the job site available to the inspector.

The products listed below did not demonstrate product approval at time of plan rev view. I understand that before these products can be inspected, they must be submitted for review for code compliance and approved by a Plans E Examiner. This form will be revised to include each new product in the categories listed above and will be highlighted to indicate the new pr products and required information.

_____

Authorized Project Agent:_____
(Contractor or Design Professional) (Print Name) (Signature)

Company Name:_____

Mailing Address:_____

City:_____ State:_____ Zip Code:_____

Telephone Number: ( )_____ Fax Number: ( )_____

Cell Phone Number: ( )_____ E-mail Address:_____

REVISIONS :

Maronda Homes
FLORIDA
4005 MARONDA WAY SANFORD,
(407) 321-0064

COPYRIGHT © 2002 MARONDA HOMES

PRODUCT APPROVAL

RELEASE DATE:

SHEET: